UNCLASSIFIED

AD NUMBER	
AD004926	
CLASSIFICATION CHANGES	
TO:	**unclassified**
FROM:	**confidential**
LIMITATION CHANGES	
TO: **Approved for public release; distribution is unlimited.**	
FROM: **Distribution authorized to DoD only; Administrative/Operational Use; 10 FEB 1953. Other requests shall be referred to Office of Naval Research, Arlington, VA 22203. Pre-dates formal DoD distribution statements. Treat as DoD only.**	
AUTHORITY	
28 Feb 1965, DoDD 5200.10; ONR ltr dtd 26 Oct 1977	

THIS PAGE IS UNCLASSIFIED

UNCLASSIFIED

AD NUMBER
AD004926
CLASSIFICATION CHANGES
TO: **confidential**
FROM: **secret**
AUTHORITY
28 Feb 1956, DoDD 5200.10

THIS PAGE IS UNCLASSIFIED

UNCLASSIFIED

AD _____

DEFENSE DOCUMENTATION CENTER

FOR

SCIENTIFIC AND TECHNICAL INFORMATION

CAMERON STATION ALEXANDRIA, VIRGINIA

DOWNGRADED AT 3 YEAR INTERVALS:
DECLASSIFIED AFTER 12 YEARS
DOD DIR 5200.10

UNCLASSIFIED

SECRET

SECURITY INFORMATION

009

AD No. 4486
ASTIA FILE COPY

PROJECT MICHAEL

CONTRACT N6-ONR-27135

COLUMBIA UNIVERSITY

HUDSON LABORATORIES

DOBBS FERRY, N. Y.

0183

RESEARCH SPONSORED BY

OFFICE OF NAVAL RESEARCH

SECRET

SECURITY INFORMATION

53AA-4059

THIS REPORT HAS BEEN DECLASSIFIED AND CLEARED FOR PUBLIC RELEASE.

DISTRIBUTION A
APPROVED FOR PUBLIC RELEASE;
DISTRIBUTION UNLIMITED.

SECURITY INFORMATION
SECRET

CU-13-53-ONR-271-Phys

COLUMBIA UNIVERSITY

Hudson Laboratories

Dobbs Ferry, N. Y.

PROJECT MICHAEL

Contract N6-ONR-27135

Technical Report No. 8
Conversion of the A Mark 6(b) Minesweeping Gear to a 30 Cycle Sound Source.

By

Henry C. Beck and Harry Sonnemann

E. T. BOOTH - DIRECTOR

J. E. Nafe
Director of Research

Research Sponsored by

Office of Naval Research

*

SECRET

SECURITY INFORMATION

February 10, 1953

Copy No. 009

This document contains information affecting the national defense of the United States within the meaning of the Espionage Laws, Title 18, U.S.C., Sections 793 and 794. The transmission or the revelation of its contents in any manner to an unauthorized person is prohibited by law.

SECRET
SECURITY INFORMATION

TABLE OF CONTENTS

Introduction	Page 1
Conversion Plan	Page 2
Construction Details	Page 4
Operating Procedure	Page 11
Performance	Page 12
References	Page 13

LIST OF FIGURES

Figure	
1	The A Mark 6(b) Minesweeping Gear
2	The 30 cps Sound Source
3	The 30 cps Sound Source without Stabilizing Fins
4	The Sound Source with Extension Case Removed Showing Synchronous Motor
5	Power Amplifier Circuit Diagram
6	Power Amplifier Rack (Front)
7	Power Amplifier Output Stage
8	Power Amplifier Plate Supply
9	Power Amplifier Transformer Deck
10	Control Rack Circuit Diagram
11	Control Rack (Front)
12	Control Rack (Rear)
13	Sound Source Towing Rig

INTRODUCTION

During the Summer of 1952 work was completed on the conversion of an A Mark 6(b) acoustic minesweeper to a high power sound source with a frequency precisely maintained at 30 cps. The source was constructed to satisfy the needs of the group at Hudson Laboratories concerned with propagation of sound in the low frequency range. It was designed to have sufficient power for propagation studies at long range. The generated signal was to be as nearly sinusoidal as possible.

A source was also needed to test the feasibility of an active system at low frequency. In this application the source was required to be stabilized in frequency to about 1 part in 10,000 so that small doppler shifts could be detected.

Of the sound sources available for conversion, the A Mark 6(b) was most suitable. The frequency is in the range 10 to 30 cps and the acoustic power output is about 250 watts. The construction of the minesweeper is such that stabilization in frequency appeared to be a straightforward process.

CONVERSION PLAN

The A Mark 6(b) minesweeping gear has two opposed pistons, each 27 in. in diameter and arranged to vibrate with a stroke of 1/4 in. The source is nonresonant and may be operated at any frequency between 10 and 30 cps by adjusting the speed of the driving motor. The pistons are driven by connecting rods from eccentrics on a horizontal shaft. The shaft is driven directly through a flexible coupling by a 5 to 7 1/2 h.p., 115 volt, dc motor. Constant speed throughout each cycle is maintained by a flywheel installed on the crankshaft between the motor and the eccentric mechanism. An annular diaphragm of molded rubber provides a water seal between each piston and the case. A flood switch shuts off the motor automatically if any water collects inside the housing. Fig. 1 shows a schematic diagram of the minesweeping gear.

The major change in the A Mark 6(b) gear itself was the attachment of an extension to the after end of the case, and the installation in the space thus provided of a synchronous motor coupled to the shaft of the dc motor. In this way driving or braking torque is supplied to hold the dc motor at constant speed. A tachometer was also attached to the shaft so that the dc motor could be brought nearly to the correct speed before turning on the synchronous motor. The necessary additional electrical connections were added to the case. Stabilizing fins were mounted on the after end of the extension. Fig. 2 shows a schematic diagram of the altered A Mark 6(b)

gear. A photograph of the completed source is shown in Fig. 3 as it appeared before the addition of stabilizing fins.

The frequency stabilized ac power for the synchronous motor was provided by amplifying the output of a tuning fork controlled power supply. The power amplifier has an available output of about 1 kw.

The details of the conversion outlined above and a description of the towing and handling arrangements are discussed in the following section.

CONSTRUCTION DETAILS

Synchronous Motor and Its Attachment

To stabilize the frequency of the sound source at 30 cps, the dc motor of the A Mark 6(b) machine is made to lock in at the synchronous speed (1800 rpm) of a synchronous motor attached to its shaft. The 1 h.p. synchronous motor required for this purpose was not commercially available. As an alternative, a 3 h.p. single phase 1725 rpm induction motor was converted to a 1 h.p. 1800 rpm synchronous motor.

Space for the synchronous motor was obtained by attaching an extension 19 1/2 in. in length to the rear of an A Mark 6(b) case. It was formed by welding steel plates of 5/8 in. thickness. There is a flange at the forward end with bolt holes for fastening the extension onto the original case. A rear flange has the same bolt hole arrangement as the original case so that the original cover plate may still be used. Water seals were made from 1/8 in. flat neoprene gaskets. On the interior of the case there are shelves welded to the sides for mounting condensers. These condensers are necessary for correcting the power factor of the synchronous motor.

The bed plate for the synchronous motor is fastened under the dc motor and extends into the extension case. This bed plate is supported on the mounting rails of the original unit and on studs welded to the bottom of the extension case.

A hole was bored in the dc motor shaft so that it could be pinned to a 3/4 in. connecting shaft. A grease seal was fitted in the end bell of the motor surrounding the connecting shaft to retain the motor bearing lubricant. The other end of the 3/4 in. shaft was pinned to a flexible coupling and the coupling, in turn, keyed to the synchronous motor shaft.

Fig. 4 shows a photograph of the synchronous motor mounted in the A Mark 6(b) case.

The Frequency Controlled Power Amplifier

There were two major problems in designing a suitable frequency controlled power amplifier to drive the synchronous motor. First, it was necessary to amplify the output signal from a fork controlled power supply to a maximum power of about 1.5 kw. At the outset it was not known what maximum power was required. The power amplifier was designed for an output of 1.5 kw corresponding to the load at which the synchronous motor pulled out of synchronism. The second problem concerned the effect on the power amplifier of power fed back into the final stage when the synchronous motor was acting as a brake.

A push pull power amplifier with an output of 1.5 kw was constructed by employing two 833-A tubes in class B operation. The input to the amplifier was obtained from an Ampex Model 375 tuning

fork controlled amplifier with a maximum output of 70 watts and frequency stability of 5 parts per million at 60° F. Adequate power to drive the synchronous motor alone from no load to maximum load was supplied when the power factor of the motor was corrected nearly to 1.0. The plate supply for the output stage of the power amplifier consisted of transformers followed by a bridge rectifier circuit with appropriate filters. 872/872-A tubes were used in the bridge rectifier. A grid bias voltage was supplied from a full wave rectifier using 5U4 tubes. In Fig. 5 there is shown a circuit diagram for the power amplifier. The completed power amplifier is shown in Fig. 6 and the output stage, plate supply, and transformer deck for this unit are shown in Figs. 7, 8 and 9, respectively.

The plate voltage for the final stage of amplification was first set at 3000 volts. Experimental tests indicated, however, that when the amplifier was used to drive the synchronous motor in the sound source the plate dissipation was excessive. By reducing the plate voltage to 1400 volts the plate dissipation was brought within the permissible limit. The dc motor could then best be locked in when the synchronous motor was supplying power to the output stage, thus acting, on the average, as a synchronous brake. Under these conditions the following data were obtained:

Plate Voltage	=	1400 volts
Plate Current	=	3 A
Power Output	=	40 watts (Generated)
Line Voltage	=	128 volts
Line Current	=	4 A

The limitation on the capacity of the power source, therefore, is the plate dissipation at the final stage. The power generated when the synchronous motor acts as a brake is dissipated in the shunt load and the plates of the 833 A's. The input power of the push pull stage was determined experimentally to be 1/2 the h.p. rating of the motor under normal operating conditions of the sound source. This power is adequate to maintain the synchronism under all average working conditions.

The output of the power amplifier is lead through a control rack containing appropriate switches and meters, and an oscilloscope for indication of the locked in condition of the dc motor. The control rack contains two wattmeters; one to indicate the power generated by the synchronous motor when acting as a brake, and the other to indicate the power supplied to the synchronous motor when it is driving the dc motor. The circuit diagram is given in Fig.10. Figs. 11 and 12 are photographs of the completed control rack.

Tachometer

A tachometer with an indicating meter on the control panel provides a signal at the source frequency for comparison with another frequency such as that of the tuning fork amplifier or that of the sound signal after transmission through water.

The tachometer consists of a small two pole single phase ac voltage generator. The generator is mounted on a bracket bolted to the forward end of the eccentric mechanism housing. The generator

shaft is secured to a small flexible coupling, which in turn is connected to a small shaft screwed into the shaft of the eccentric mechanism. The grease seal is provided in the end cap of the eccentric shaft mechanism to retain bearing lubricant.

External Connections

Two 2-conductor water-proof cables and an air line enter the case through appropriate seals mounted in one of the removable hand hole covers at the front of the machine. One of these cables carries current to the synchronous motor, the second carries the output of the tachometer. The original 4-conductor cable of the A Mark 6(b) gear is still used for its original purpose. It supplies current to the dc motor and carries wires for connection to the flood switch in the bottom of the case. The air hose, fed from an air flask through a reducing flange, is used to pressurize the unit. The original air valve mounted on the back plate is no longer used.

Towing and Handling Arrangements

Fig. 13 shows the method that has been employed in towing the sound source from the USS ALLEGHENY. The source is supported on a 1/2 in. steel cable of a deep trawl winch. A forward tow line, also a 1/2 in. steel cable is led to a chock on the forecastle deck where it is made fast to bitts. The electrical connecting wires and air hose are bound into a single cable. From the sound source

they are led forward to the forecastle deck and from there aft to the laboratory.

Stabilizing fins have been added to the rear of the sound source to improve the towing characteristics of the unit. These consist of 2 horizontal plates and 2 vertical plates, all made from 1/4 in. steel plate. They are joined together by 2" x 2" angle iron. The "horizontal" plates slope down toward the rear at an angle of 10° with the horizontal when the machine is properly suspended. This tends to prevent the forward end of the source from rising when it is towed. The vertical fins may be inclined at any angle from 0° to 15° with the fore and aft axis of the sound source. Thus, they may be adjusted to prevent the source from swinging in underneath the ship. The required angle depends upon depth at which the unit is towed.

Short lengths of channel iron have been welded to the case in several locations around the pistons. These channels serve as bumpers preventing vital damage to the pistons and the eccentric mechanism while the unit is being handled aboard ship.

Steel skids 1 in. thick have been spot welded to the bottom of the original case to insure that the extension case and stabilizing fins take no load when the unit is on deck.

The addition of all the new equipment increases the weight in air of the sound source from its original 3500 lbs to approximately 4650 lbs. The considerable shift in the center of gravity made it necessary to add a lifting pad eye aft of the original one. The

overall dimensions of the converted unit are as follows:

	Without Stabilizing Fins	With Stabilizing Fins
Height	52"	52"
Length	95"	110"
Width	29"	41"

OPERATING PROCEDURE

To operate the sound source the dc motor is turned on first and brought up to 1800 rpm. The speed is indicated by the tachometer output voltage. The synchronous motor is energized by closing the circuit to the power amplifier when the dc motor is passing through synchronous speed. The proper moment for closing the switch is determined by observation of the Lissajous figure formed by an oscilloscope with the 60 cycle tuning fork amplifier output on the Y axis and the tachometer signal on the X axis. After energizing the synchronous motor the elliptical pattern remains stationary, indicating that the dc motor is locked in at synchronous speed. No electrical adjustments are necessary after the dc motor is locked in at synchronous speed. In operating at sea the air pressure in the source must be monitored continuously, for a difference between internal and external pressure of 1 1/2 psi is sufficient to cause the dc motor to pull out of synchronism.

PERFORMANCE

Operations with the sound source have now been carried out both in shallow and deep water. As of 31 December 1952, it had run reliably for a total of about 100 hours, divided as follows: 10 hours in the laboratory, 8 hours in the Hudson River, 49 hours in Long Island Sound, and 33 hours near Bermuda.

The preliminary tests in the Hudson River[1] showed the frequency to be constant to within ± 0.005 cps. This is close to the desired frequency stability of 1 part in 10,000.

In August 1952, the source was used in Long Island Sound[2] for an experimental study of shallow water propagation at 30 cps. The source was lowered into the water by the boom on an anchored self-propelled lighter. Sound level measurements were made from two small work boats. From the intensity measurements made within 15 to 50 ft of the source, rough values of the acoustic power output were obtained. These fall in the range 200 to 300 watts, in agreement with the value 168 db (above 0.0002 dynes/cm^2) at 6 ft given in reference 4.

The first propagation studies at long ranges and in deep water were carried out at Bermuda during October 1952. Here the source was towed by the USS Allegheny and the sound was received by the deep geophone (425 fathoms) of the U.S. Navy Sofar Station. Intensity measurements were made out to a range of 140 miles. There were large dips in signal amplitude but when these were not present the signal remained 20 db above background at 140 miles.

Doppler shifts were also measured at Bermuda. The shift was caused by motion of the source and was measured by two different methods.[3] In the most sensitive of these the phase difference between a signal of standard frequency and the signal received at the geophone was recorded on a phasemeter. A phase difference changing in time is an indication of doppler shift. Shifts of frequency could be measured to ± 0.002 cps corresponding to 0.2 knots.

The maximum towing speed depends upon the depth of the source. It was about 4 knots at 40 ft, the source depth used in the Bermuda work. At greater speeds the source is not stable in the water. Some changes have been made in fin orientation and in towing cable attachment in an attempt to raise the maximum towing speed.

REFERENCES

1. Hudson Laboratories Progress Report 1 July 1952
2. Hudson Laboratories Progress Report 1 October 1952
3. Hudson Laboratories Progress Report 16 Sept.-31 Dec. 1952
4. Woods Hole Oceanographic Institution
   Low Frequency Sound Sources - Reference No. 51-45

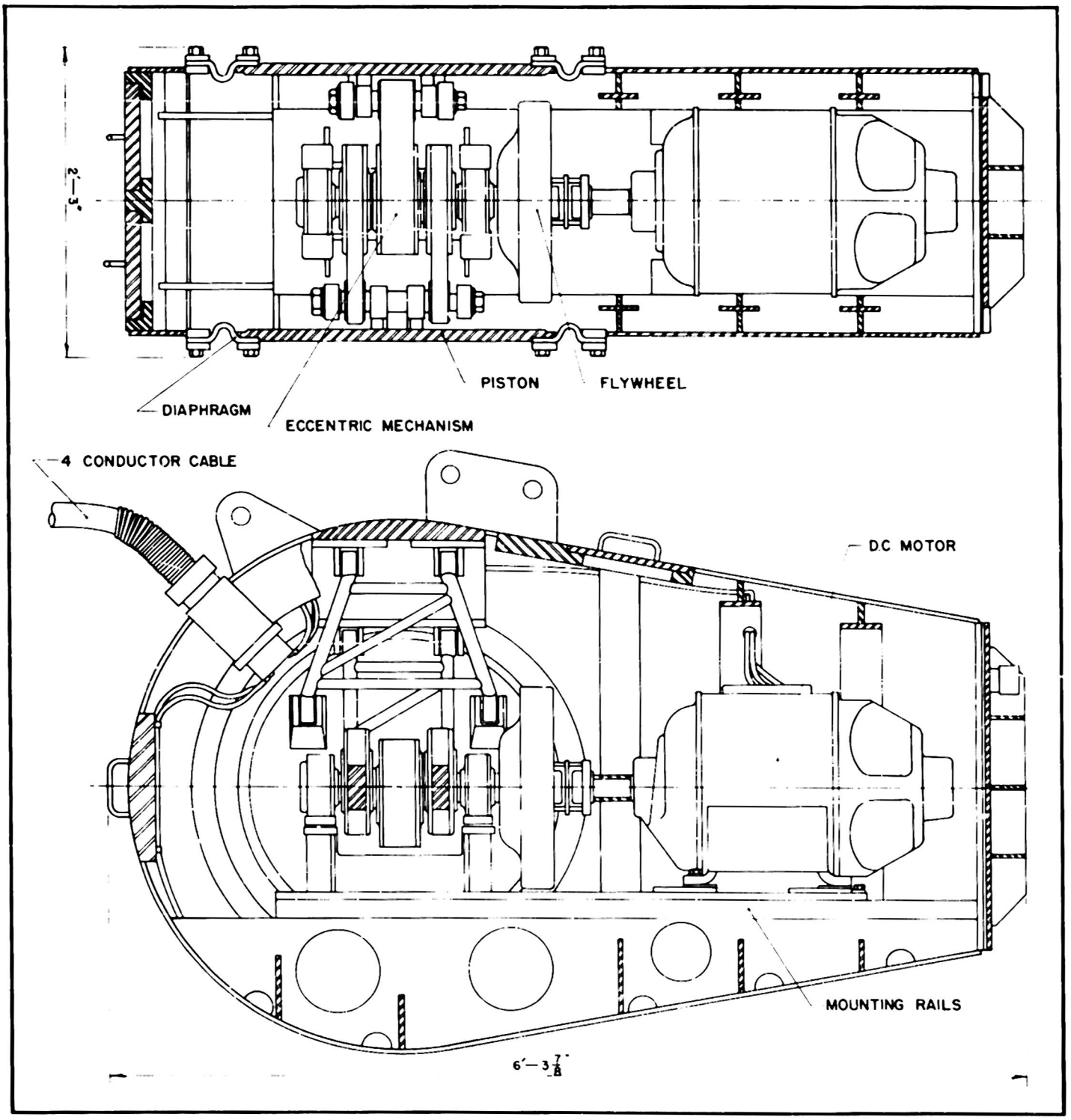

A MARK 6(b) MINESWEEPING GEAR

Figure 1

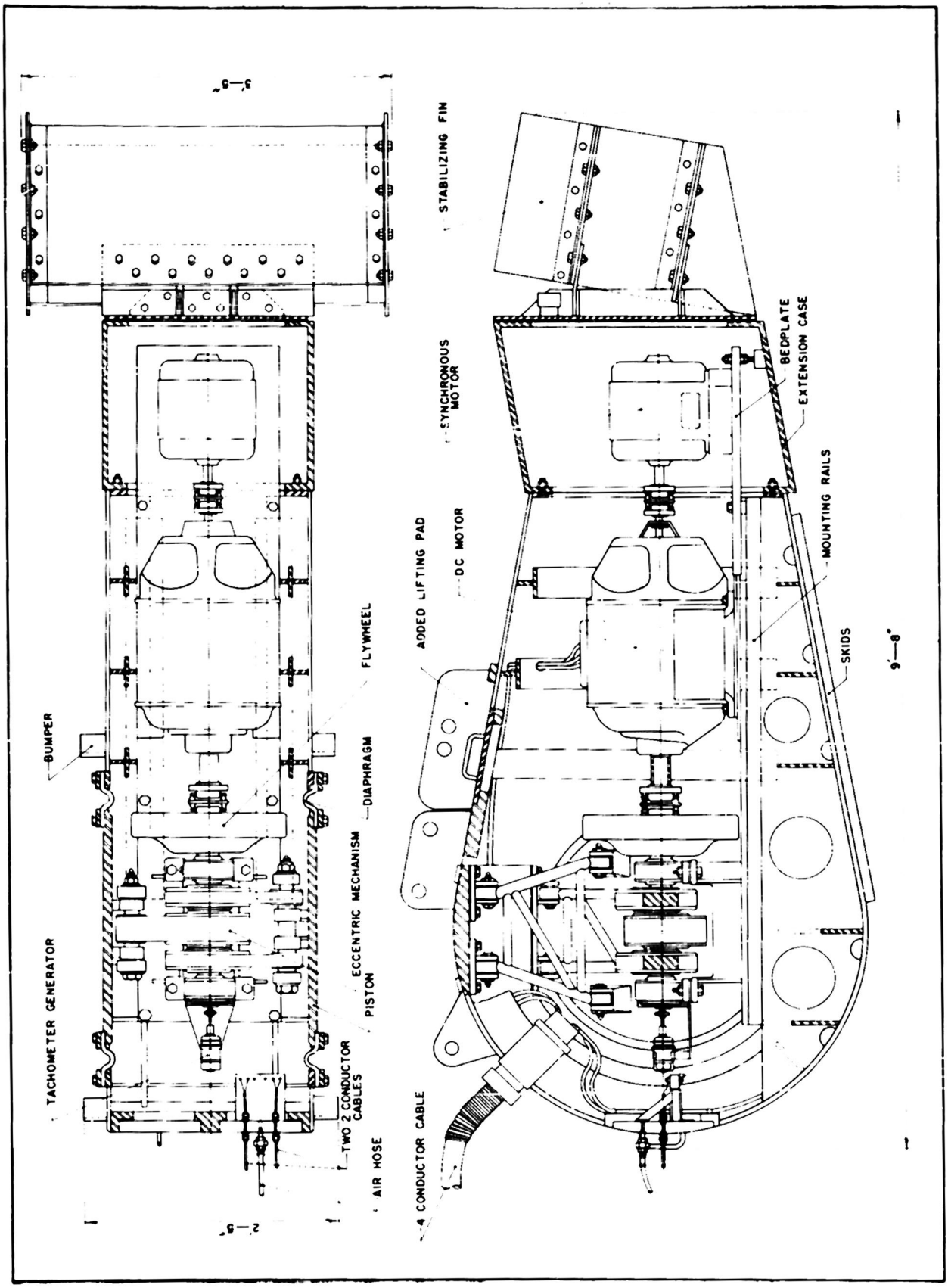

30 CYCLE SOUND SOURCE
(CONVERTED FROM A MARK 6(b) MINESWEEPING GEAR)

Figure 2

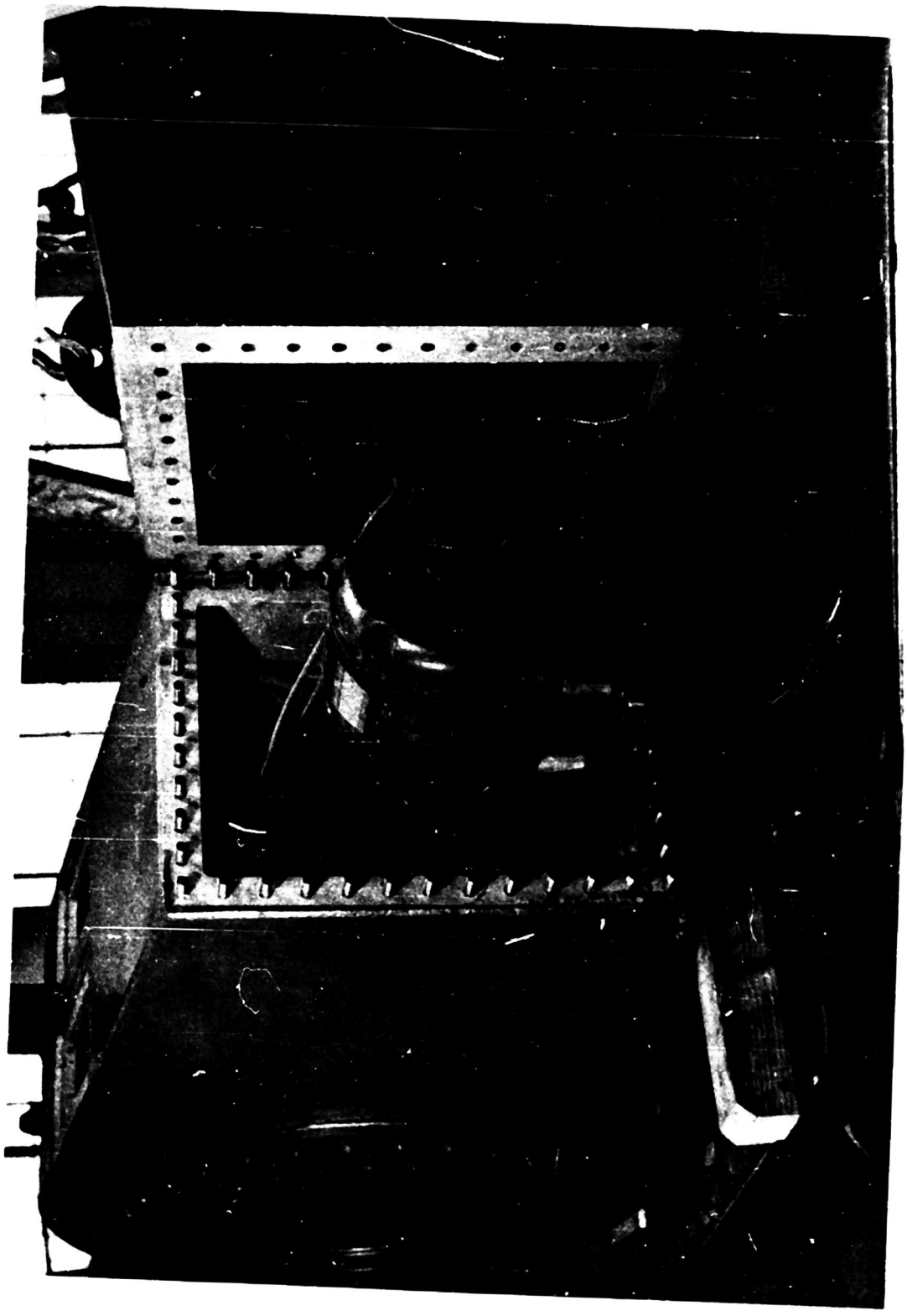

Figure 4
The Sound Source with Extension Case Removed Showing Synchronous Motor

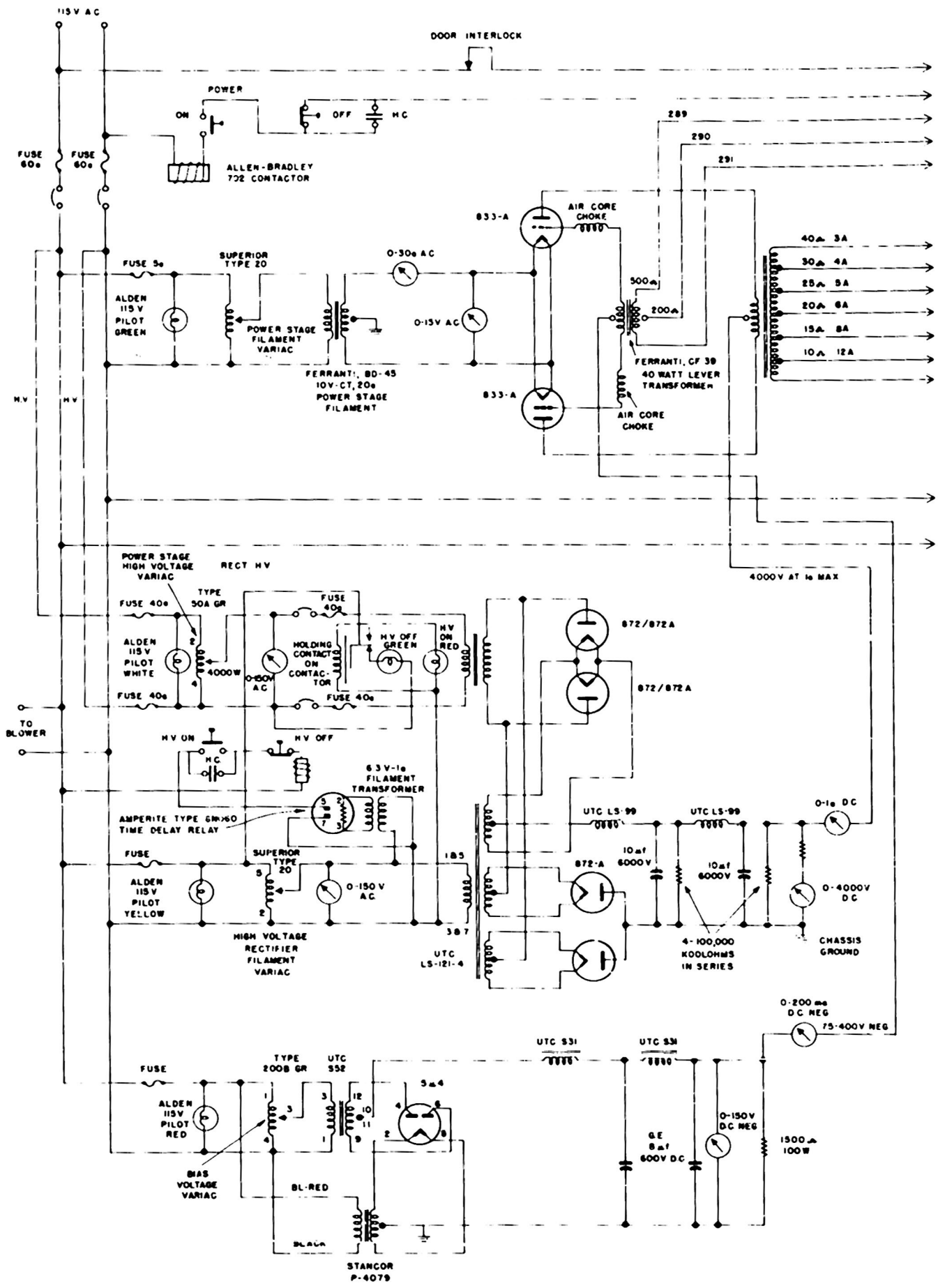

POWER AMPLIFIER RACK

Figure 5

Figure 6

Power Amplifier Rack (Front)

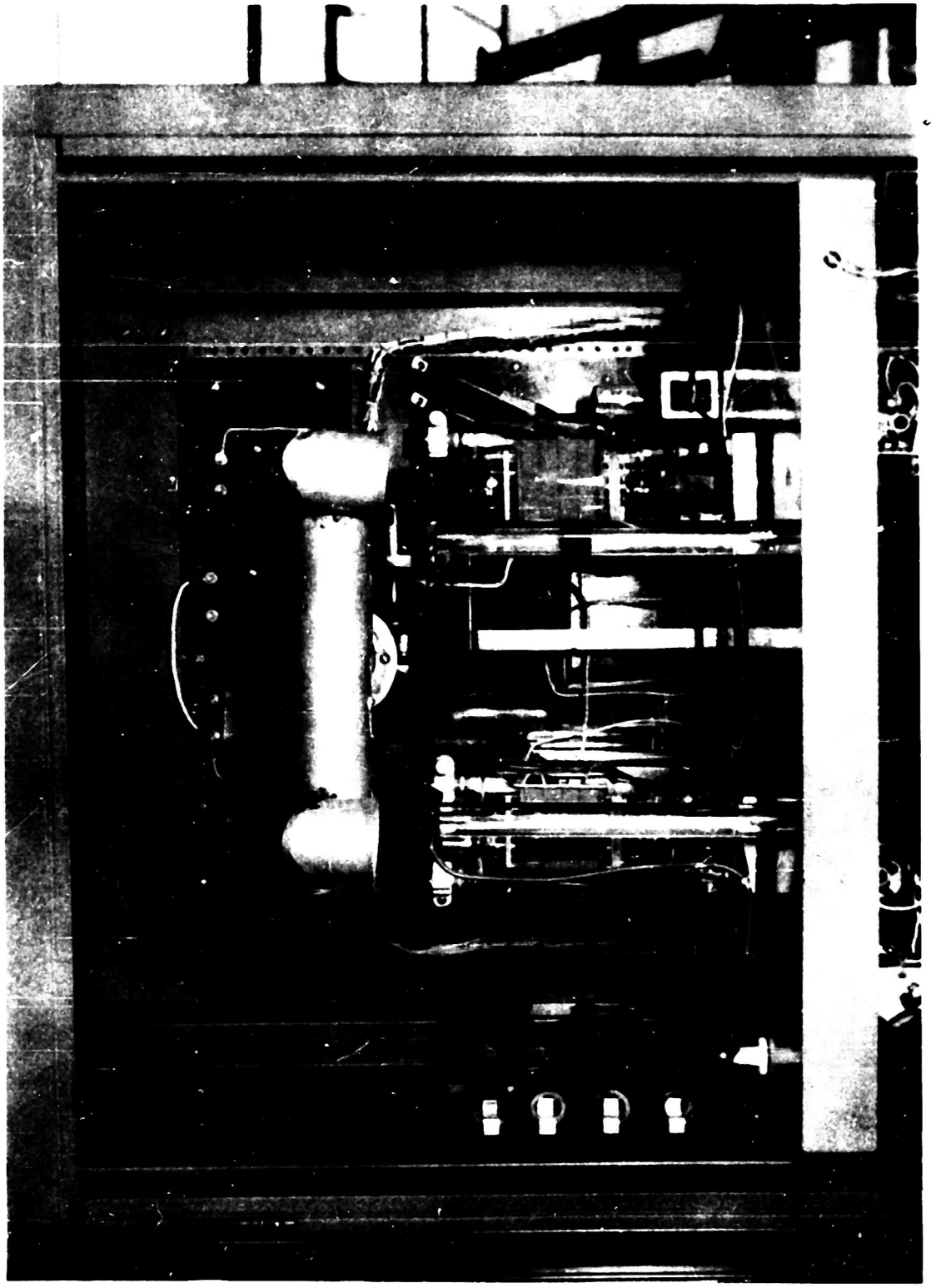

Figure 7

Power Amplifier Output Stage

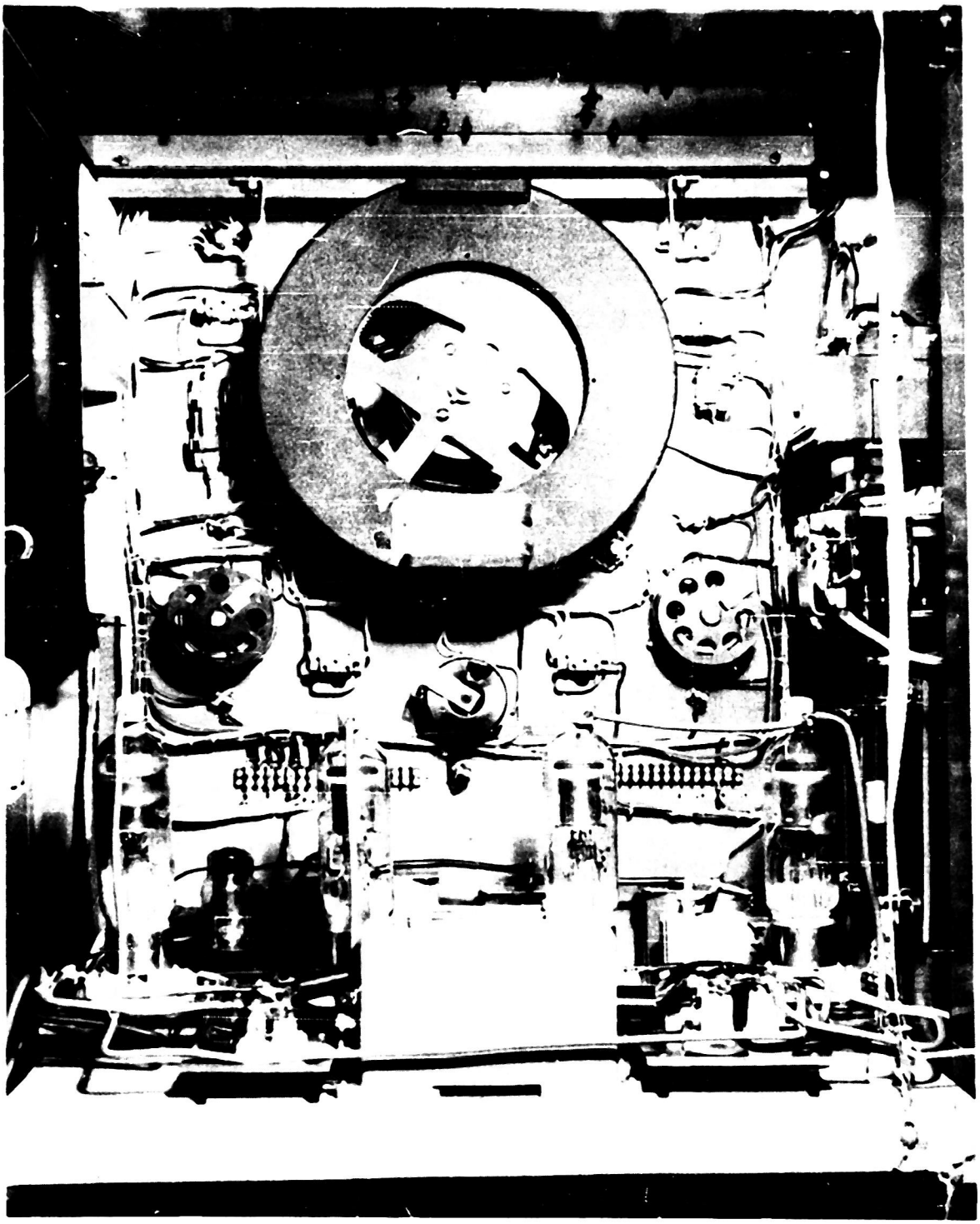

Figure 8

Power Amplifier Plate Supply

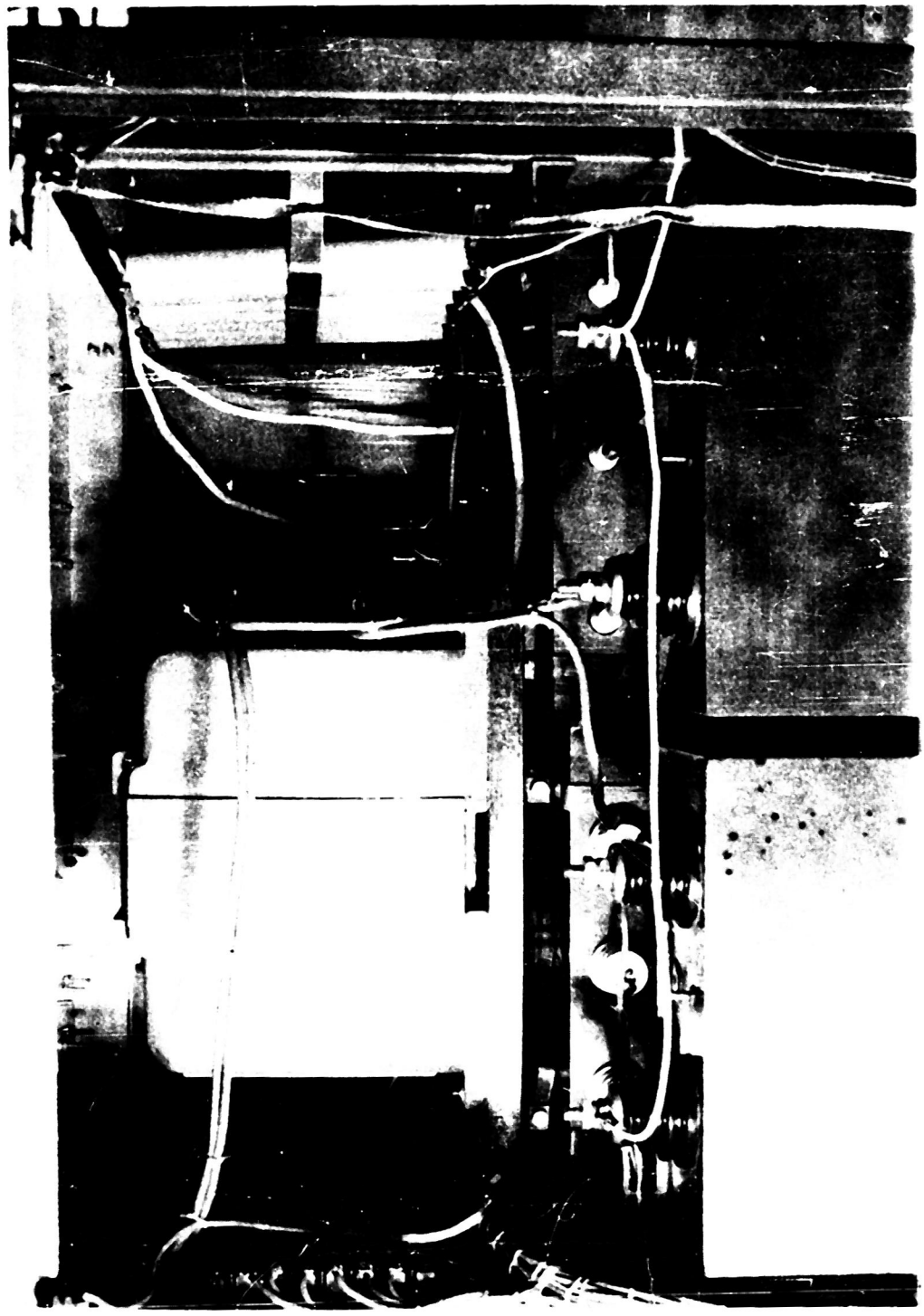

Figure 9
Power Amplifier Transformer Deck

SECRET
SECURITY INFORMATION

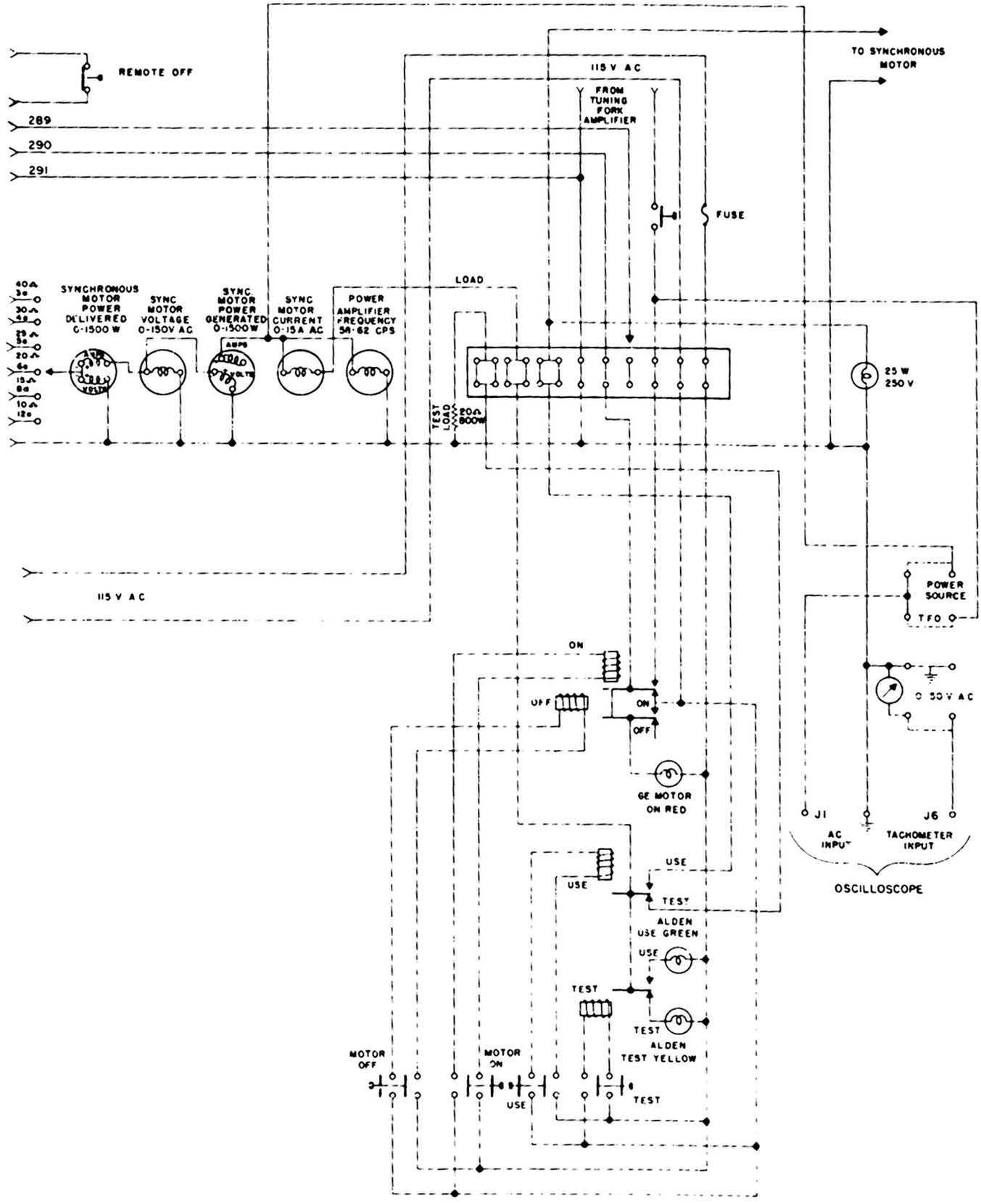

CONTROL RACK

Figure 10

SECURITY INFORMATION

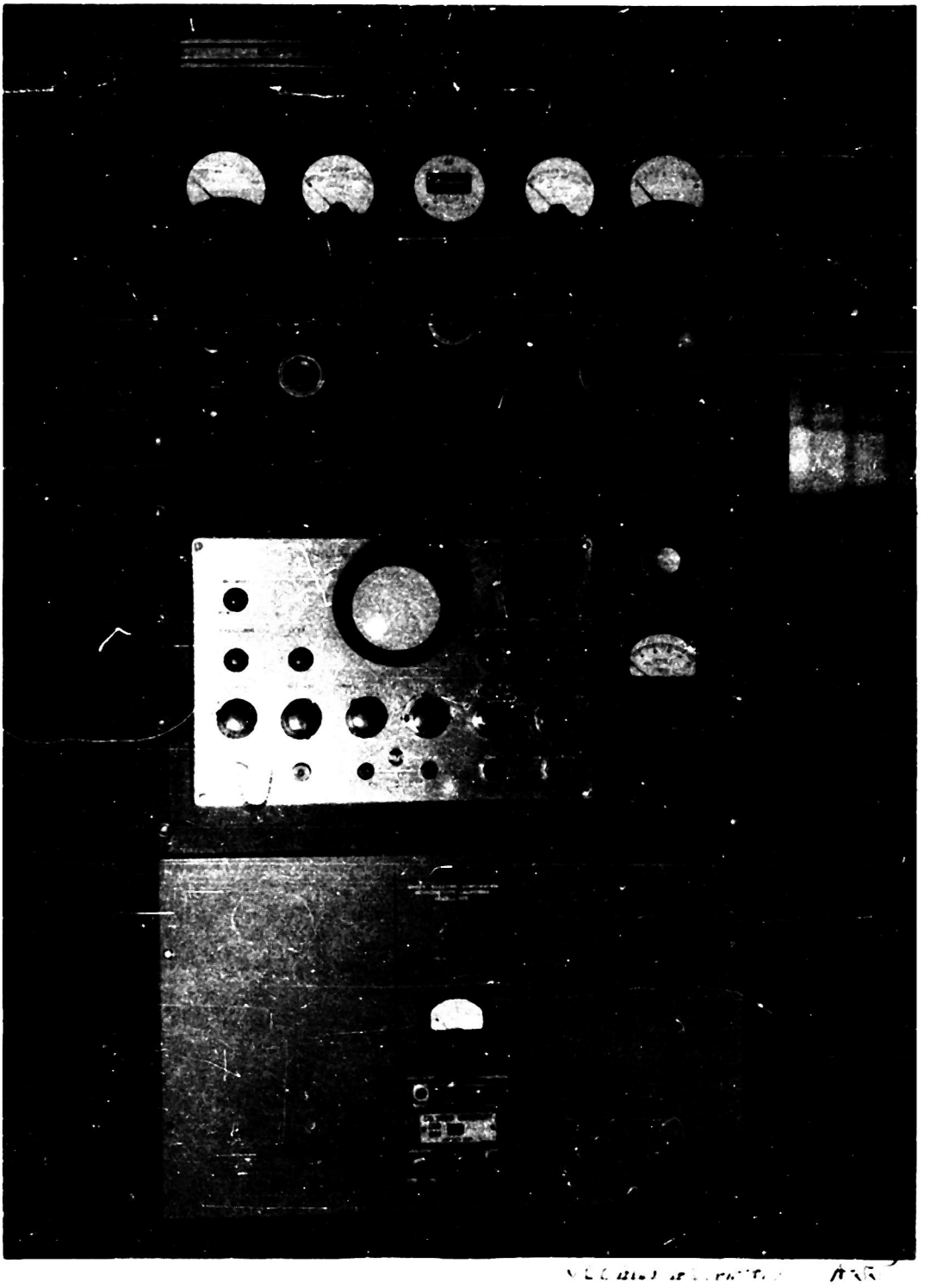

Figure 11

Control Rack (Front)

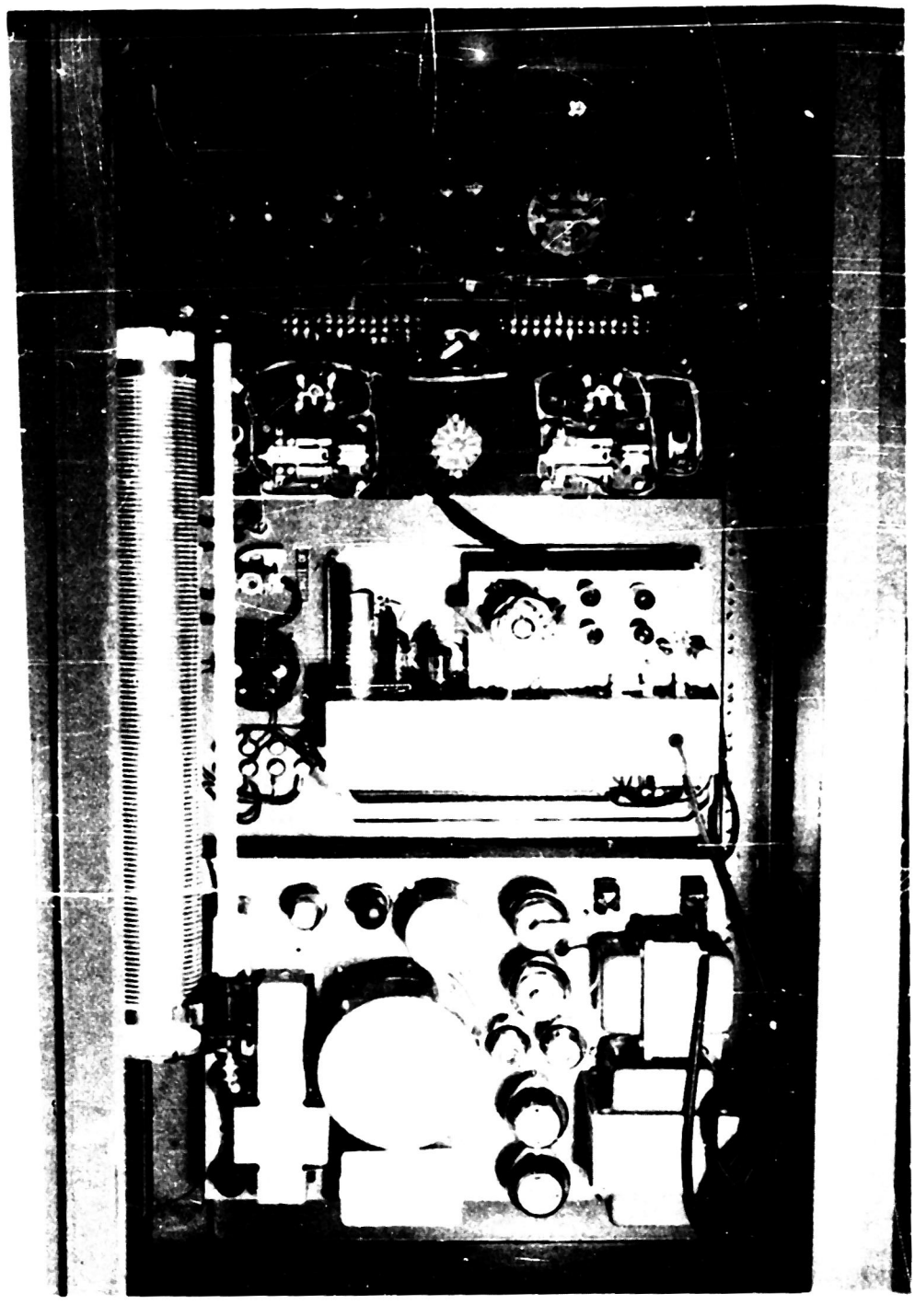

Figure 12

Control Rack (Rear)

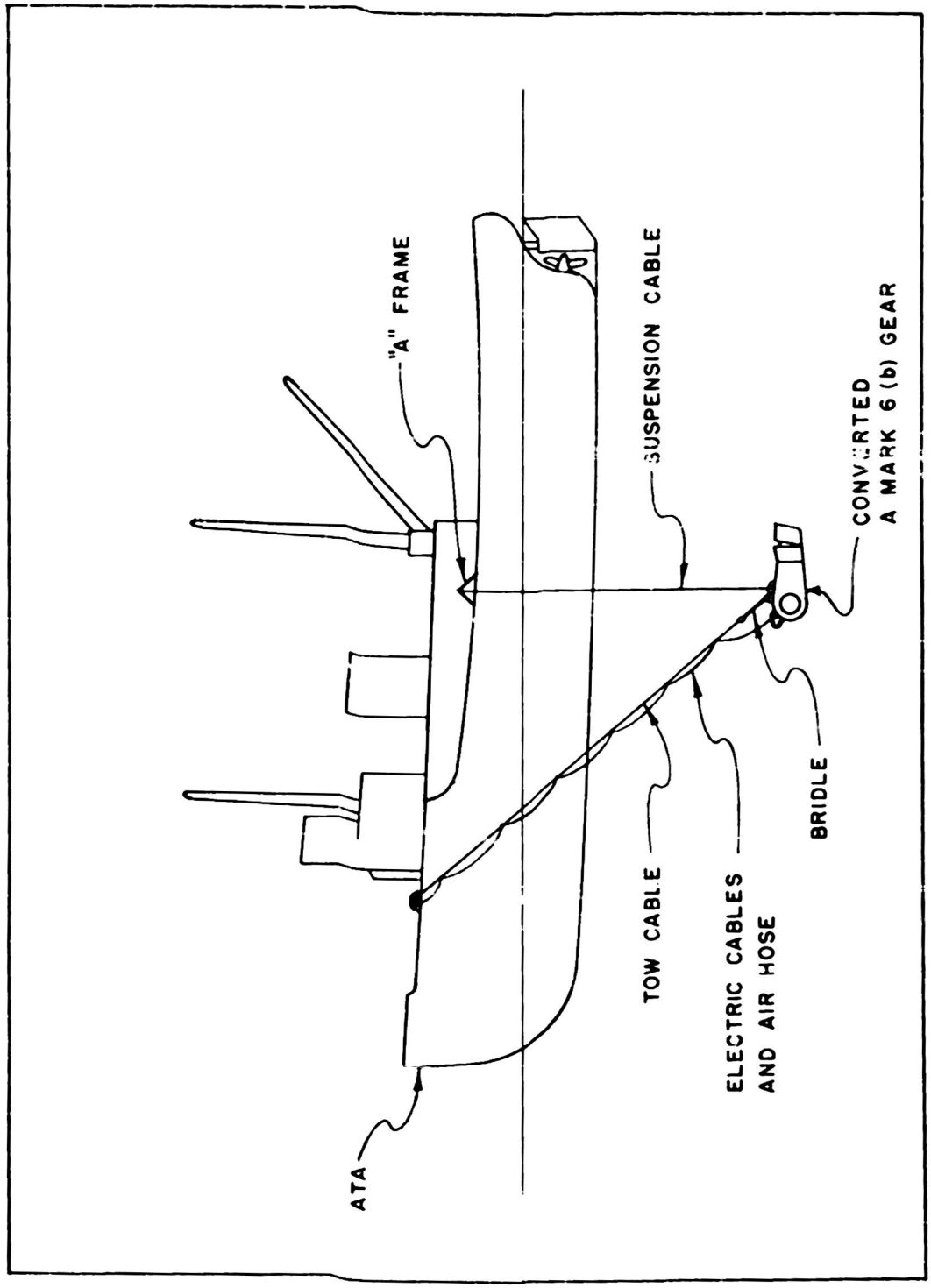

3 NM-1-53

Figure 13
Sound Source Towing Rig