AD No. 46393
ASTIA FILE COPY

CARNEGIE INSTITUTE OF TECHNOLOGY
DEPARTMENT OF ELECTRICAL ENGINEERING
PITTSBURGH 13, PENNSYLVANIA

A SELF-EXCITED INDUCTION GENERATOR WITH REGULATED VOLTAGE

H. M. McCONNELL

MAGNETIC AMPLIFIERS - TECHNICAL REPORT NO. 15

WORK PERFORMED UNDER OFFICE OF NAVAL RESEARCH CONTRACTS
N7 ONR 30306 AND 30308 - PROJECT NO. 075-272 AND 275

MAGNETIC AMPLIFIERS-TECHNICAL REPORT NO. 15

A SELF-EXCITED INDUCTION GENERATOR WITH REGULATED VOLTAGE

By H. M. McConnell

Work performed under Office of Naval Research Contracts N7 ONR 30306 and 30308, Project No. 075-272 and 275.

Synopsis

An alternating-current generating system composed of a capacitor-excited induction generator controlled by saturable reactors and magnetic amplifiers is presented. Design advantages and operational limitations are discussed. Tests on a laboratory model system are included.

Department of Electrical Engineering
Carnegie Institute of Technology
Pittsburgh 13, Pennsylvania
February, 1954

A SELF-EXCITED INDUCTION GENERATOR WITH REGULATED VOLTAGE

Introduction

The synchronous generator with direct driven exciter has several disadvantages when applied in airborne equipment. However, no competing system has succeeded in achieving a smaller weight in pounds per KVA at a given speed. The practical difficulties are overcome at present by careful engineering, so that a reliable generating system is obtained. These difficulties relate to brush performance at high altitude, commutation at high speed, overhung moment due to the exciter, bracing of the rotor windings against centrifugal force, and high cost of manufacture.

Many of these disadvantages can be avoided if the induction generator can be adapted to automatic voltage control. There are no brushes or commutator, no overhung exciter, and the rotor structure which is so difficult to manufacture in the synchronous generator is replaced by the robust squirrel-cage. This report describes work directed toward the utilization of the induction generator in airborne service. Its field of usefulness in competition with the standard synchronous generator is discussed.

Voltage Control

When induction generators are used in central station service, excitation is supplied by synchronous generators operating in parallel at other locations on the system. Excitation for isolated service must be supplied by capacitance. Excitation control, and consequently voltage control, is obtained by varying the net capacitive reactance.

In addition to the achievement of a generator without brushes, it is desirable to eliminate both electronic tubes and moving parts from the regulating system. The control scheme to be described accomplishes both these objectives. Fixed static capacitors, connected in parallel with the generator terminals or in a series-parallel combination, provide the excitation. Self-saturating magnetic amplifiers connected across the machine terminals provide excitation control, by drawing a controllable lagging reactive current. A pilot magnetic amplifier stage controls the main magnetic amplifiers. The equipment is arranged as shown in the block diagram of Figure 1.

The excitation system is designed to provide sufficient capacitive current drain for the most extreme condition of load, when the main magnetic amplifier is driven to minimum output. Other conditions requiring less capacitive current at the regulated voltage are obtained by increasing the main magnetic amplifier current drain. Since an increase in main magnetic amplifier current always drives the voltage down, single-valued and stable control characteristics are assured.

Initial voltage build-up depends on the existence of sufficient residual magnetism in the rotor iron. It has been found experimentally that the grade of sheet steel used in industrial machines will retain sufficient induction to assure build-up at no load if the inactive period has been short. However, an inactive period of a few days has been sufficient to reduce the residual below the necessary amount. It is suggested that a few per cent of the rotor punchings

should be replaced by a steel having properties approaching that of a permanent magnet material. Moderate success has been obtained experimentally by shortening the squirrel-cage and adding an Alnico ring driven from the shaft by friction, although this cast material has definite mechanical stress limitations.

Factors of Design

There are several advantages of the induction generator, which taken together may be decisive when the limit of miniaturization is contemplated. First, the rotor ampere-wire loading is less than in the synchronous generator, while the stator ampere-wire loading is greater. Since the rotor is the most difficult to cool, this altered ampere-wire loading more nearly matches the inherent heat dissipation ability of the structure. A second factor is that the electrical insulation between rotor copper and rotor iron is an absolute minimum, the oxide film being sufficient. Consequently, heat transfer from rotor copper to rotor iron may be greatly increased. A third important property of the rotor structure is that mechanical bracing of field coils is not required. Higher peripheral speeds are possible and a saving in manufacturing cost is effected. Fourth, the squirrel cage is the same as a damper winding for operation on unbalanced loads.

These factors of design all indicate that some reduction in the weight of the generator itself may be achieved. In addition, the exciter of the synchronous generator is eliminated altogether. Balancing the weight advantage gained in this manner is the fact that the excitation and control must be provided by external apparatus, which altogether quite likely offsets the previous gain. Definite answers to this question must await the design of a system using the same materials and allowable temperature rise as are employed at present in synchronous generators.

Factors of Operation

The most serious limitation of the induction generator system is its inability to deliver sustained short-circuit current. The present philosophy of circuit protection in aircraft requires that faults be cleared by limiters. Consequently the generator system must deliver a specified short-circuit current for a specified time. The induction generator with capacitor excitation behaves on short circuit somewhat like the d-c shunt generator, with the exception that the induction generator time constant is so short that no appreciable heating of a fuse element may be obtained from its transient current.

A similar remark applies to the capability of carrying momentary low power factor overloads, such as starting an induction motor. This kind of load acts to remove excitation just as does the main magnetic amplifier. If the control circuit is not fast enough to transfer the reactive current from main magnetic amplifier to load before the decay of rotor flux takes place, excitation is lost. As mentioned in the previous paragraph, only a short time is available to accomplish the transfer. In addition, the newly connected lagging load must be reduced quickly to a value within the system rating.

The wave form of the reactive current drawn by the main magnetic amplifier is poor, and the resultant non-sinusoidal machine current introduces wave form distortion into the output voltage. There is no easy way to eliminate this distortion.

Variable speed operation is possible. Operation at a regulated frequency is possible if the speed of the rotor can be adjusted to account for the slip. Parallel operation at a regulated frequency, with real and reactive load compensation, could be accomplished using the present hydraulic drive motors with but little change in the associated load dividing circuits. Due to the lack of overload capacity already discussed, greater difficulty in "synchronizing" generators would be expected than is encountered with synchronous machines.

Possible Applications

The limitations already enumerated seem to prohibit the use of the induction generator for continuous duty in larger ratings as now required in commercial or piloted military aircraft. However, the machine itself is adaptable to vaporization cooling and a high degree of miniaturization. Its manufacturing advantages, those of reduced cost and ready adaptability to mass production methods, indicate that it is better suited to quantity production than the synchronous generator. It appears that the induction generating system may be most useful in comparatively low power, single unit, miniature ratings built in considerable quantity, where load circuit protection by limiters is not practised.

Equivalent Circuit and System Design

The equivalent circuit of the system is shown in Figure 2. The induction machine is represented by its simplified equivalent network having two parallel branches. The main magnetic amplifier is represented as a reactive element drawing a controllable current. Both shunt and series capacitors are included. All quantities are referred to the per unit base of design center frequency, rated load voltage per phase star, and rated load current per terminal.

The circuit equations may be simplified to the form

$$V_1 = V\left(1 + \frac{X_{c1}}{X_{c2}}\right) - j\left(\frac{X_{c1}}{f}\right) I_L \qquad (1)$$

$$0 = I_{ma} + I' + I_m + I_L + j\left(\frac{f}{X_{c2}}\right) V \qquad (2)$$

where all voltages and currents are phasors. One other equation is necessary for determination of V_1, I_{ma}, and s. This third equation states that the shaft input must be equal to the losses plus the electrical output. In other words, the total power delivered to the equivalent circuit from the point where V_1 is measured must be zero. The power equation is

$$|I'|^2\left(\frac{R_2'}{s} + R_1\right) + |V I_L| \cos\theta_L = 0 \qquad (3)$$

An optimum choice for X_{c1} and X_{c2} minimizes the range of magnetic amplifier currents required for operation at full load over an extended frequency range. At low frequency, the presence of the series capacitor introduces a phase shift between the machine and the load such that the load current looks less reactive to the machine; the amount of reactive current needed from the shunt capacitor is considerably reduced. On the other hand, the generator should operate near its

maximum power capability at high frequency, so that the extra reactive current provided by the shunt capacitor can be absorbed by the machine and need not be taken by the magnetic amplifier.

The condition that the induction generator operate at maximum power capability can be expressed analytically by the equation

$$|VI_L| \cos \theta_L = \frac{|V_1|^2}{2f X_T} \qquad (4)$$

where X_T is the sum of stator and rotor leakage reactances at base frequency referred to the stator. This equation is a statement that at rated load the output power component of machine current is just equal to the radius in the machine circle diagram. Substitution of this condition into (1) and (2) yields

$$\left(\frac{X_{c1}}{f}\right)^2 - \left(2\left|\frac{V}{I_L}\right| \sin\theta_L\right)\left(1+\frac{X_{c1}}{X_{c2}}\right)\left(\frac{X_{c1}}{f}\right) + \left|\frac{V}{I_L}\right|^2\left(1+\frac{X_{c1}}{X_{c2}}\right)^2 - 2f\left|\frac{V}{I_L}\right| X_T \cos\theta_L = 0 \qquad (5)$$

This equation gives a relationship between the ratio (X_{c1}/X_{c2}) and X_{c1} itself, with frequency and load as parameters. If it is assumed that f = 2.0 per unit (twice design center frequency) and X_T = 0.4 per unit at base frequency, it is found that X_{c1}/X_{c2} should be about 0.3 and X_{c1} should be about 0.6 per unit at base frequency. This combination is adequate to handle rated KVA at any power factor between 0.8 lagging and unity.

Two sample vector diagrams are shown in Figure 3 for unity power factor, full load, and in Figure 4 for 80% power factor lagging, full load. Computations made in this way lead to performance data summarized in Figures 5, 6, and 7. The system data assumed for these computations are given in Table 1.

The highest machine voltage is 1.76 per unit, at 0.5 per unit frequency and full load, unity power factor. The highest machine current is 0.87 per unit, at 2.0 per unit frequency at full load, unity power factor. The per unit base for machine impedances referred to the machine rating is 1.76/0.87 = 2.02 times the system per unit base. Machine impedances on their own base are shown in Table 1. It is found that the machine assumed for sample calculations has lower than normal leakage reactance. The proper combination of series and shunt capacitance for other machine constants can be determined by trial calculations similar to those reported here.

Experimental Work

An induction generator system with series and shunt capacitors has been tested in the laboratory with results in general agreement with the calculated performance data. The machine tested was an industrial type induction motor rated at 2.5 horse power, 220 volts, 60 cycles, 6.4 amperes, 1750 rpm. Rated output voltage was taken to be 30 volts, in order to maintain rated machine volts per cycle at an expected minimum frequency of 15 cycles with unity power factor, full load. Base frequency was taken to be 30 cycles.

The series capacitor reactance was 0.90 ohm at base frequency, while the shunt capacitor reactance was 1.70 ohms per phase star at base frequency. These low reactances were obtained by connecting capacitors at the secondary of step-up

transformers in order to avoid the use of prohibitively large capacitors. Accordingly, the transformer characteristics at the different frequencies acted to change the apparent capacitive reactance. A system designed for normal aircraft voltage and frequency would not have this difficulty since the capacitors could be connected directly.

The main magnetic amplifiers were controlled manually to obtain the steady state performance data presented in Figures 8 to 11 inclusive. The lower limit of speed was set by the quiescent current of the main magnetic amplifiers, which increases rapidly at the lower frequencies.

The upper limit of speed was set by a stability consideration. It will be noted that in the region of higher speeds, an increase in speed requires a decrease in the main magnetic amplifier current to hold rated voltage, due to the transfer of reactive current to the machine. (This effect is most pronounced at full load; however, the high system losses in this laboratory model at no load cause the same behavior.) At some critical frequency the control current must be reduced as the speed (and frequency) increase further. Speed variations in this region set up an unstable oscillation because of the feedback through self-saturation of the main magnetic amplifier, and the result is loss of excitation. Use of somewhat less than 100% self-saturation in the main magnetic amplifier could be expected to help control this type of instability should it appear in a closed loop regulating scheme.

A voltage reference and a pilot stage of magnetic amplification were added to test the self-regulating ability of the system. This arrangement was also used to make transient performance tests. The power capability of the reference and the gain of the pilot stage were both insufficient to achieve a good voltage regulation, but the gain was sufficient to set up a sustained modulation of the output voltage. This modulation was accentuated by the speed transients introduced into the prime mover, which was a direct current motor in this case. This type of modulation may be corrected in the usual way by the addition of feedback circuits to the input of the pilot stage.

The modulation of output voltage shows the typical non-sinusoidal behavior associated with the variable response time of magnetic amplifiers. However, this particular unstable behavior is not the same as the ferro-resonant oscillations which have been observed in series circuits containing capacitance and saturable reactors. In fact, the induction generator system with shunt and series capacitors can be thrown into ferro-resonance by the sudden application of an inductive load of low impedance. The subsequent transient dies out very slowly (if at all) and is characterized by very severe sub-harmonic oscillations. This type of ferro-resonant oscillation cannot be corrected by the usual feedback techniques, since an entirely different mode of operation exists in the magnetic amplifiers.

The performance of the self-regulated system is illustrated by the oscillograms of Figure 12. Identification of the various oscillograms is given in Table 2.

Conclusions

This study of the self excited induction generator with magnetic amplifier control, although by no means complete, has demonstrated that the generating system is workable. The main problems requiring further extensive investigation are the overall weight in comparison with the synchronous machine, the optimum choice of main magnetic amplifier and capacitor combination to minimize system weight and at the same time maintain inherent stability of control over a wide speed range, and the prevention of ferro-resonant behavior during load transients. The study has indicated that all of these problems have a practical solution. A reasonable field of application for the system has been indicated after a discussion of the design advantages and operational limitations.

Table 1

(All values are in per unit at base frequency)

Quantity	On System Base	On Machine Base
X_{c1}	0.56	
X_{c2}	1.60	
X_T	0.40	0.198
X_m	9.00	4.45
R_1	0.08	0.0396
R_2'	0.08	0.0396

Table 2

Identification of oscillograms in Figure 12

Serial	Description
7	no load, 500 rpm
8	no load, 1000 rpm
9	no load, 1800 rpm
10	balanced 0 p. f. inductive load applied, 1000 rpm
11	balanced 0 p. f. inductive load applied, 700 rpm
12	balanced 0 p. f. inductive load applied, 1000 rpm
13	balanced resistive load applied, 700 rpm

Table 2 (con't)

Serial	Description
14	balanced resistive load applied, 1600 rpm
15	calibration (see below)

Description	Channel	Calibration
pilot MA control current	1 (top)	0.050 amp rms
main MA control current	2	0.500 amp rms
60 cycle timing	3	not calibrated
line voltage Vab	4	50.0 volts rms
line voltage Vca	5	50.0 volts rms
$\triangle$ phase current I_{bc}	6 (bottom)	3.95 amp rms

Captions for Figures

Figure 1. Block diagram of self-excited induction generator with magnetic amplifier control.

Figure 2. Equivalent circuit of generator with capacitors and main magnetic amplifier.

Figure 3. Vector diagrams, unity power factor load.

Figure 4. Vector diagrams, 80% power factor lagging load.

Figure 5. Calculated performance, no load.

Figure 6. Calculated performance, full load, 80% power factor lagging.

Figure 7. Calculated performance, full load, unity power factor.

Figure 8. Frequency as a function of speed at various loads.

Figure 9. Main magnetic amplifier control current characteristics as a function of speed and load.

Figure 10. Performance of model system at no load.

Figure 11. Performance of model system at full load, unity power factor.

Figure 12. Transient performance of model system. Oscillograms identified in Table 2.

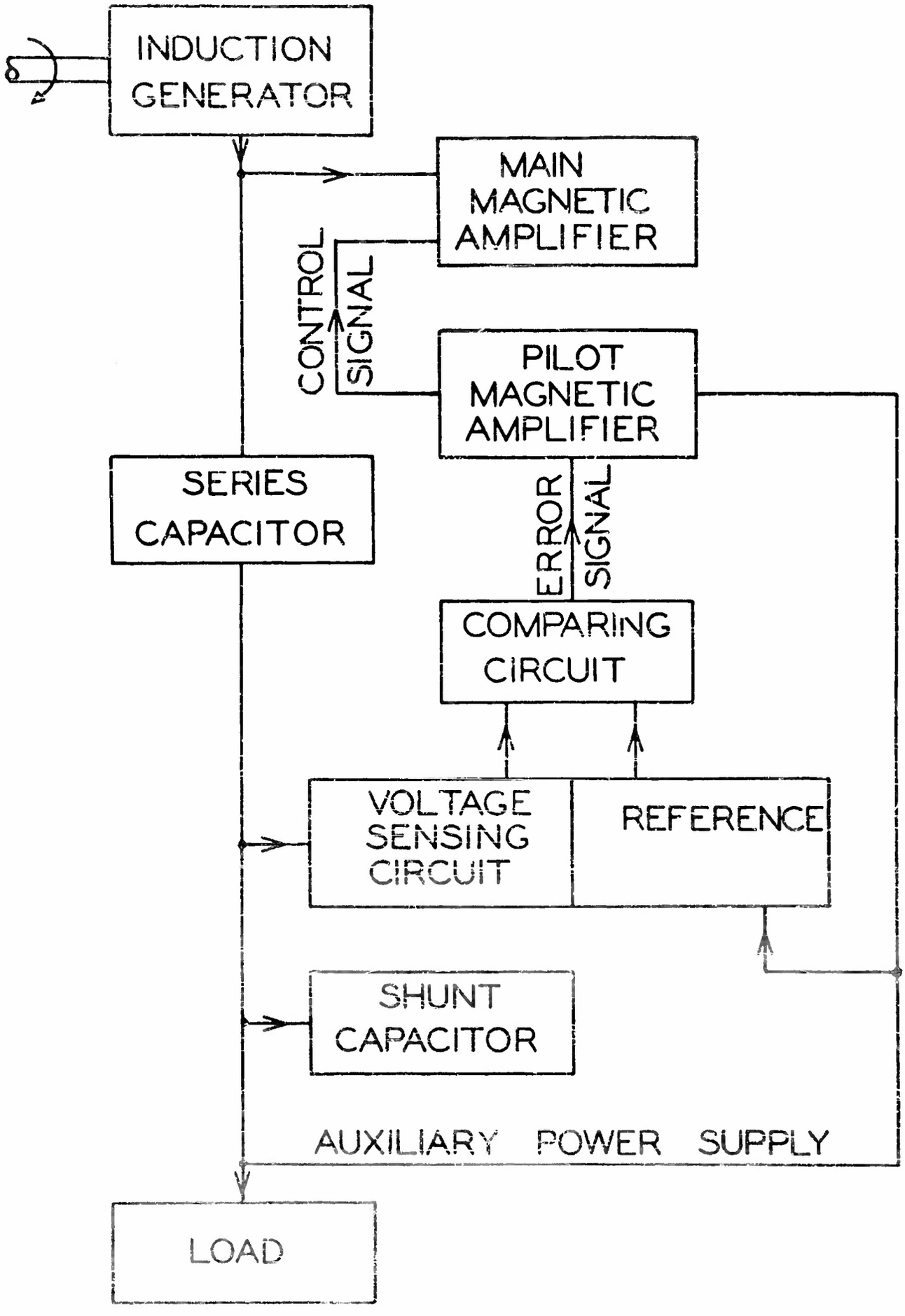
INDUCTION GENERATOR
MAIN MAGNETIC AMPLIFIER
CONTROL SIGNAL
PILOT MAGNETIC AMPLIFIER
SERIES CAPACITOR
ERROR SIGNAL
COMPARING CIRCUIT
VOLTAGE SENSING CIRCUIT
REFERENCE
SHUNT CAPACITOR
AUXILIARY POWER SUPPLY
LOAD

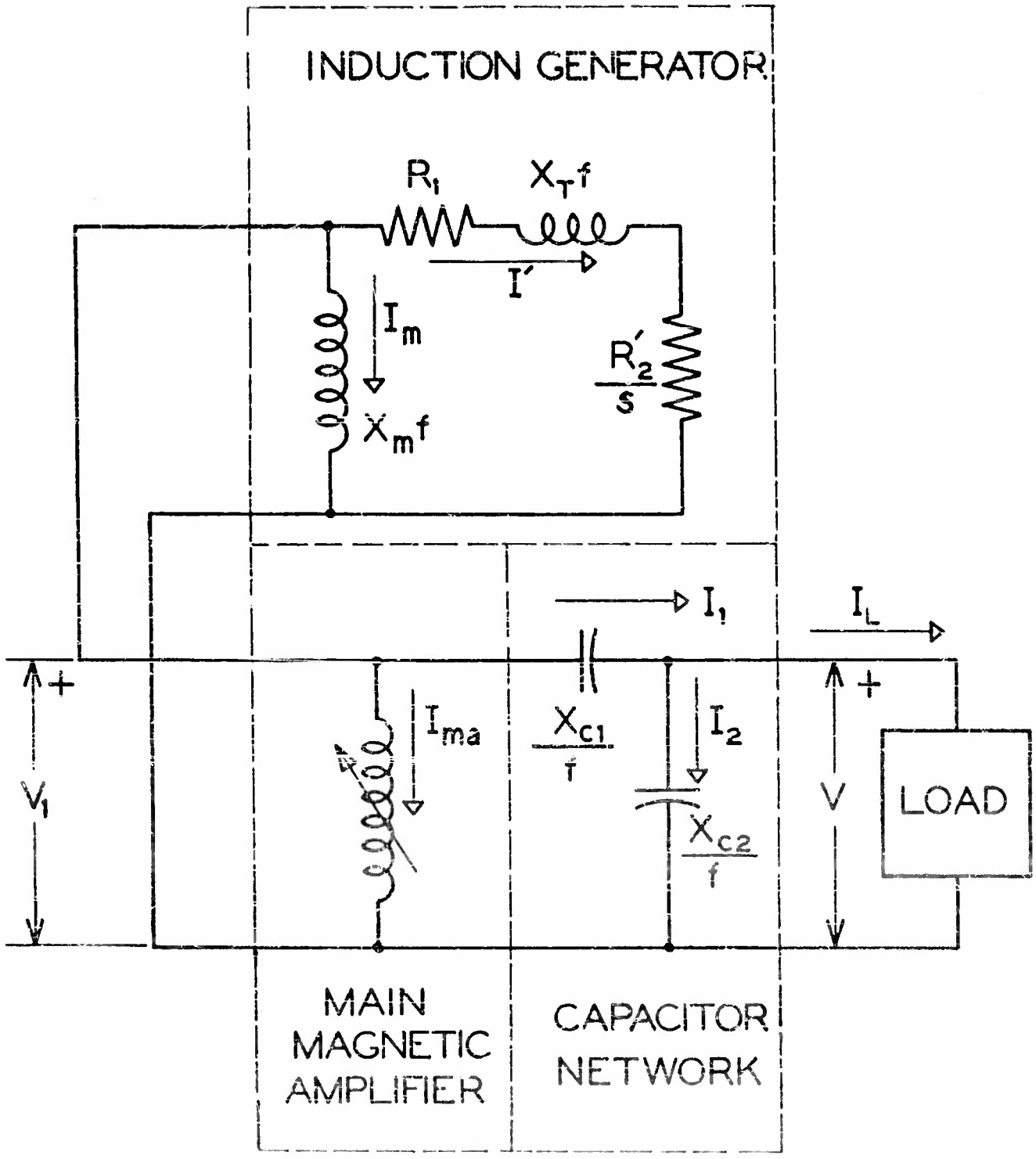
INDUCTION GENERATOR
R_1
$X_T f$
I'
I_m
$X_m f$
$\frac{R'_2}{s}$
I_1
I_L
+
V_1
I_{ma}
$\frac{X_{C1}}{f}$
I_2
$\frac{X_{C2}}{f}$
V
+
LOAD
MAIN MAGNETIC AMPLIFIER
CAPACITOR NETWORK

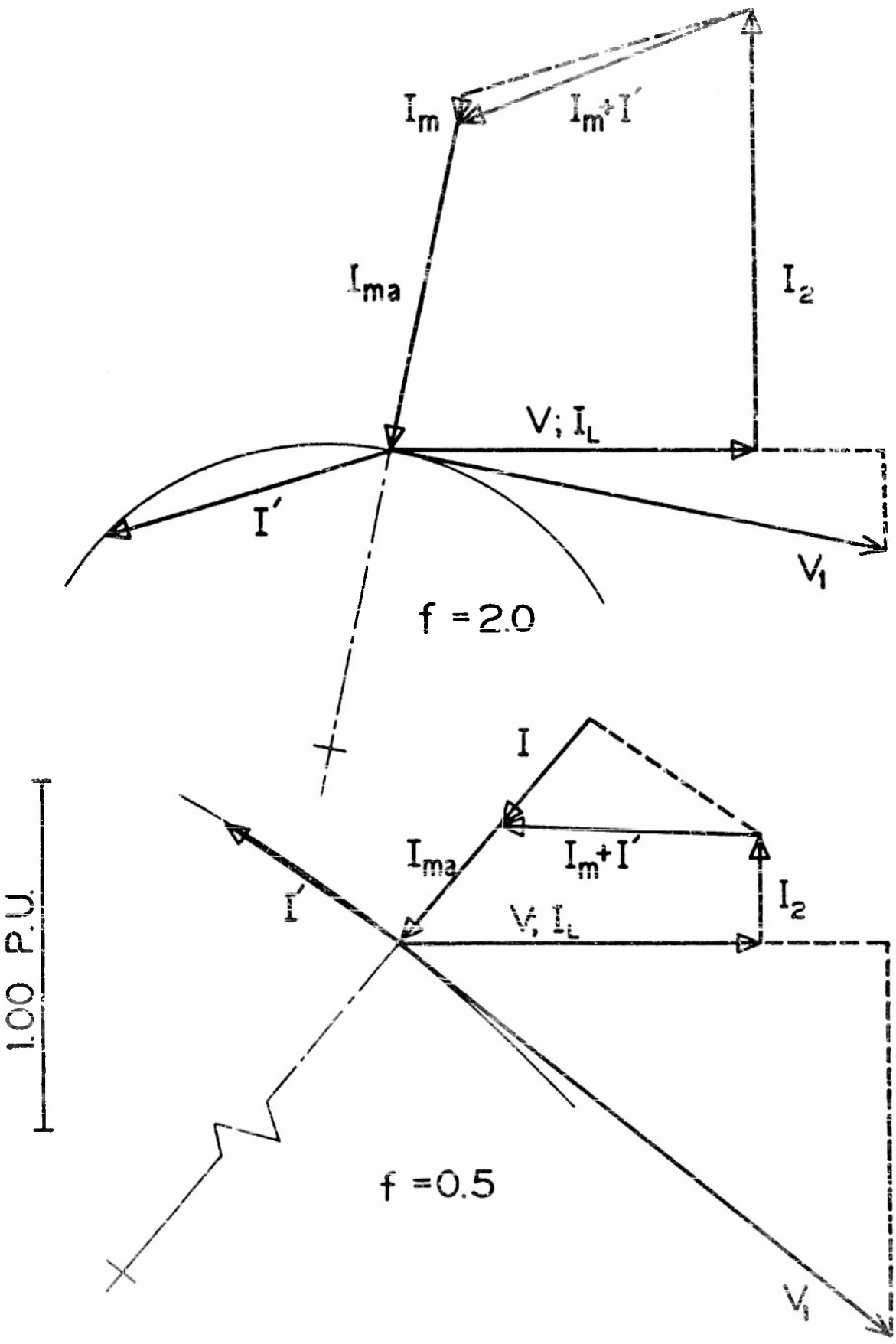
I_m
I_m+I'
I_{ma}
I_2
$V; I_L$
I'
V_1
f = 2.0
I
I_{ma}
I_m+I'
I_2
I'
$V; I_L$
1.00 P.U.
f = 0.5
V_1

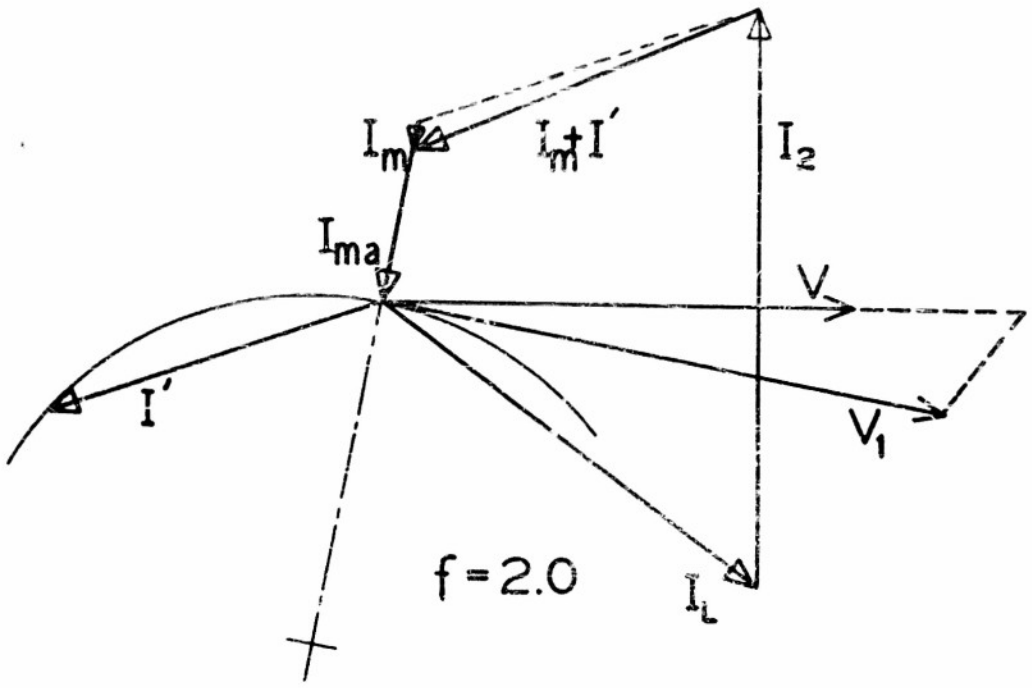
I_m
I_m+I'
I_2
I_{ma}
V
I'
V_1
f = 2.0
I_L

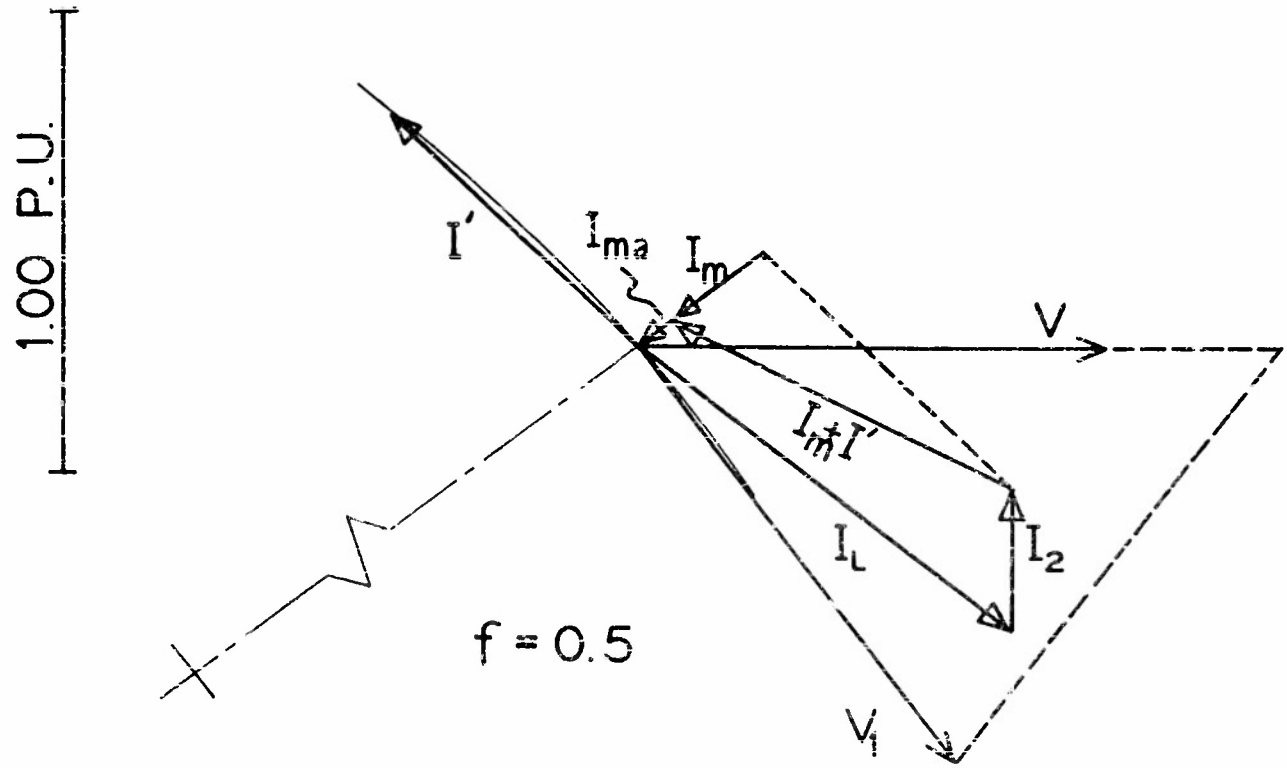
1.00 P.U.
I'
I_{ma}
I_m
V
I_m+I'
I_L
I_2
f = 0.5
V_1

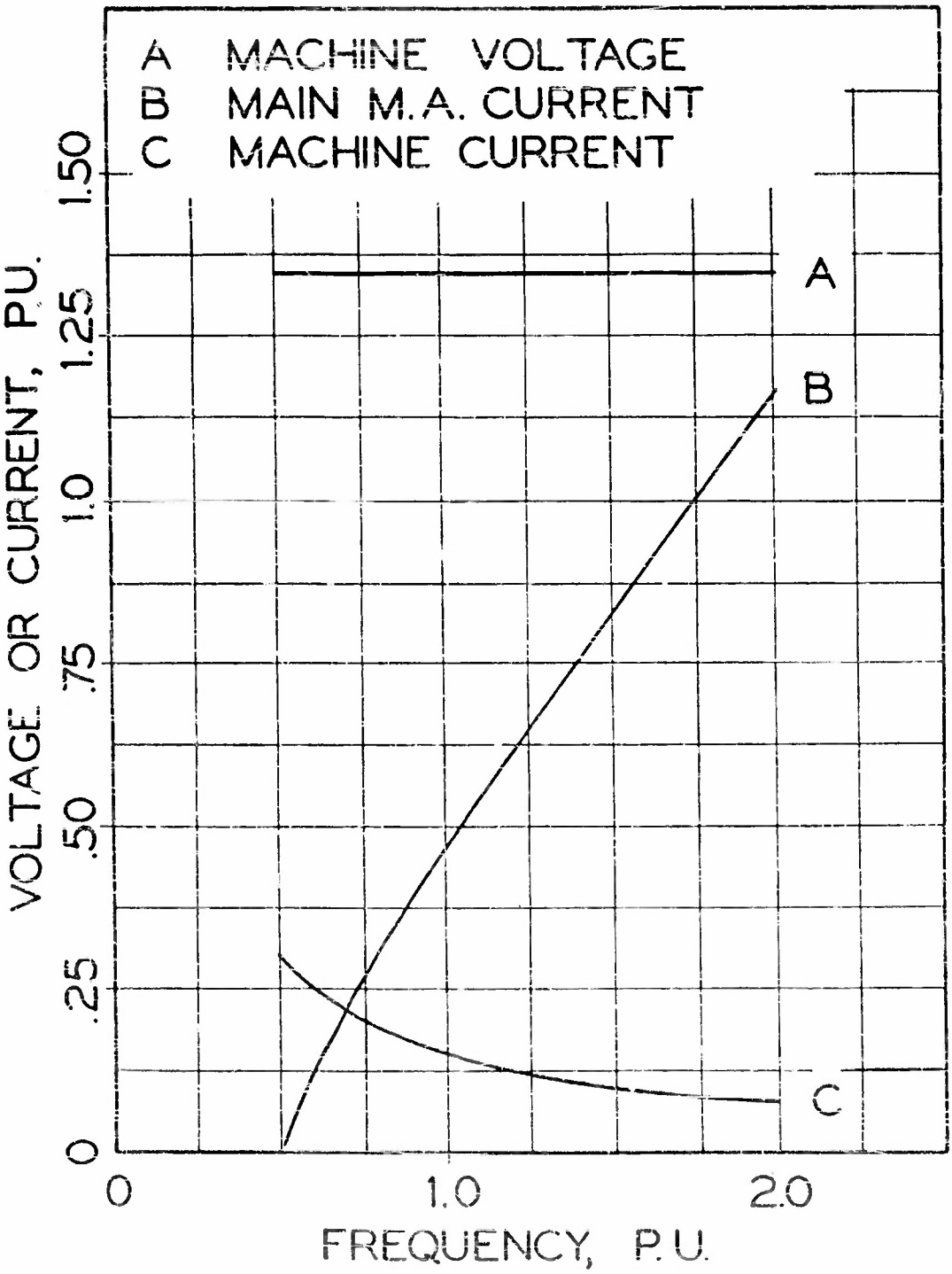
A MACHINE VOLTAGE
B MAIN M.A. CURRENT
C MACHINE CURRENT
VOLTAGE OR CURRENT, P.U.
0
.25
.50
.75
1.0
1.25
1.50
A
B
C
0
1.0
2.0
FREQUENCY, P.U.

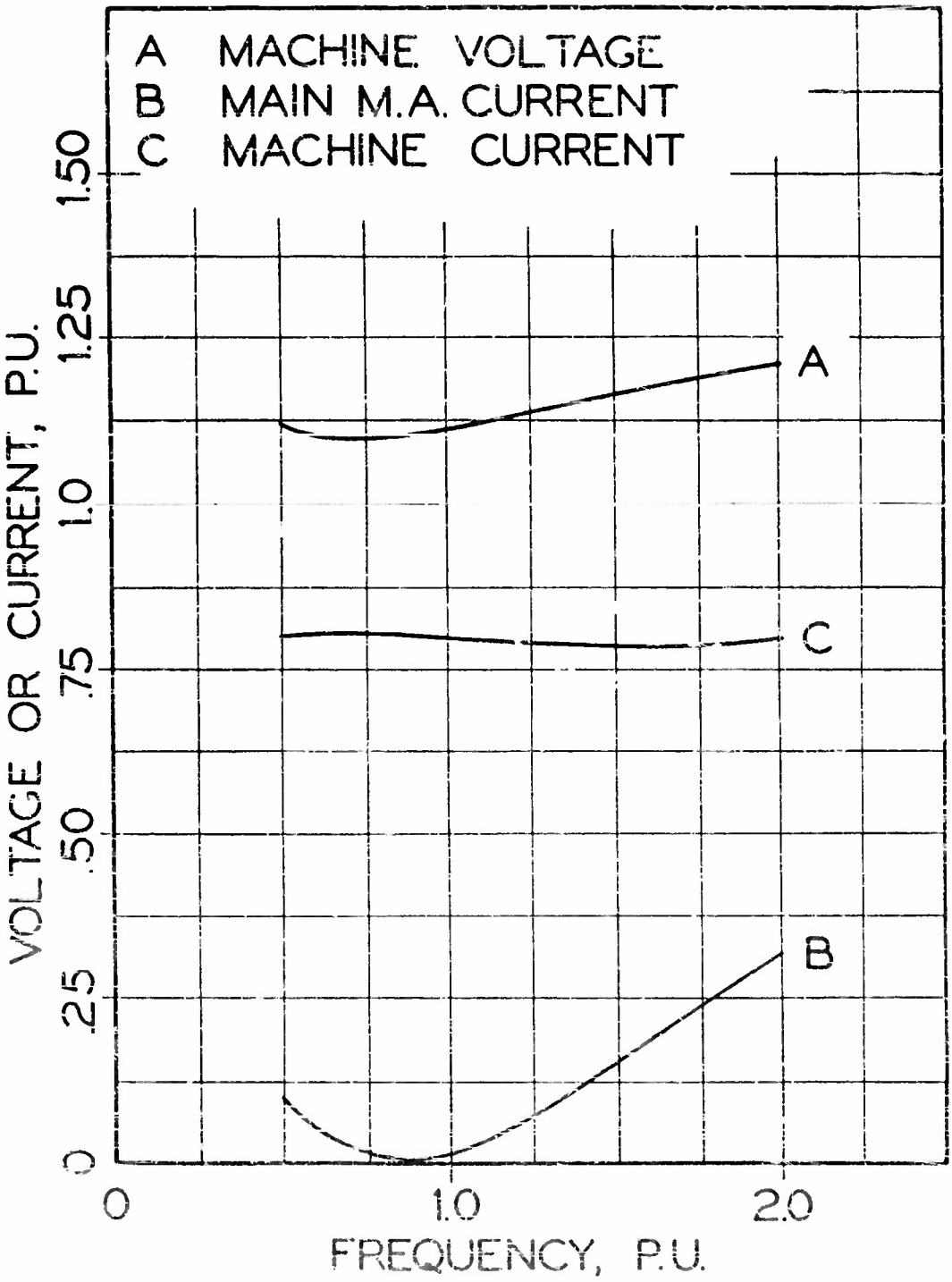
A MACHINE VOLTAGE
B MAIN M.A. CURRENT
C MACHINE CURRENT
VOLTAGE OR CURRENT, P.U.
0
.25
.50
.75
1.0
1.25
1.50
A
C
B
0
1.0
2.0
FREQUENCY, P.U.

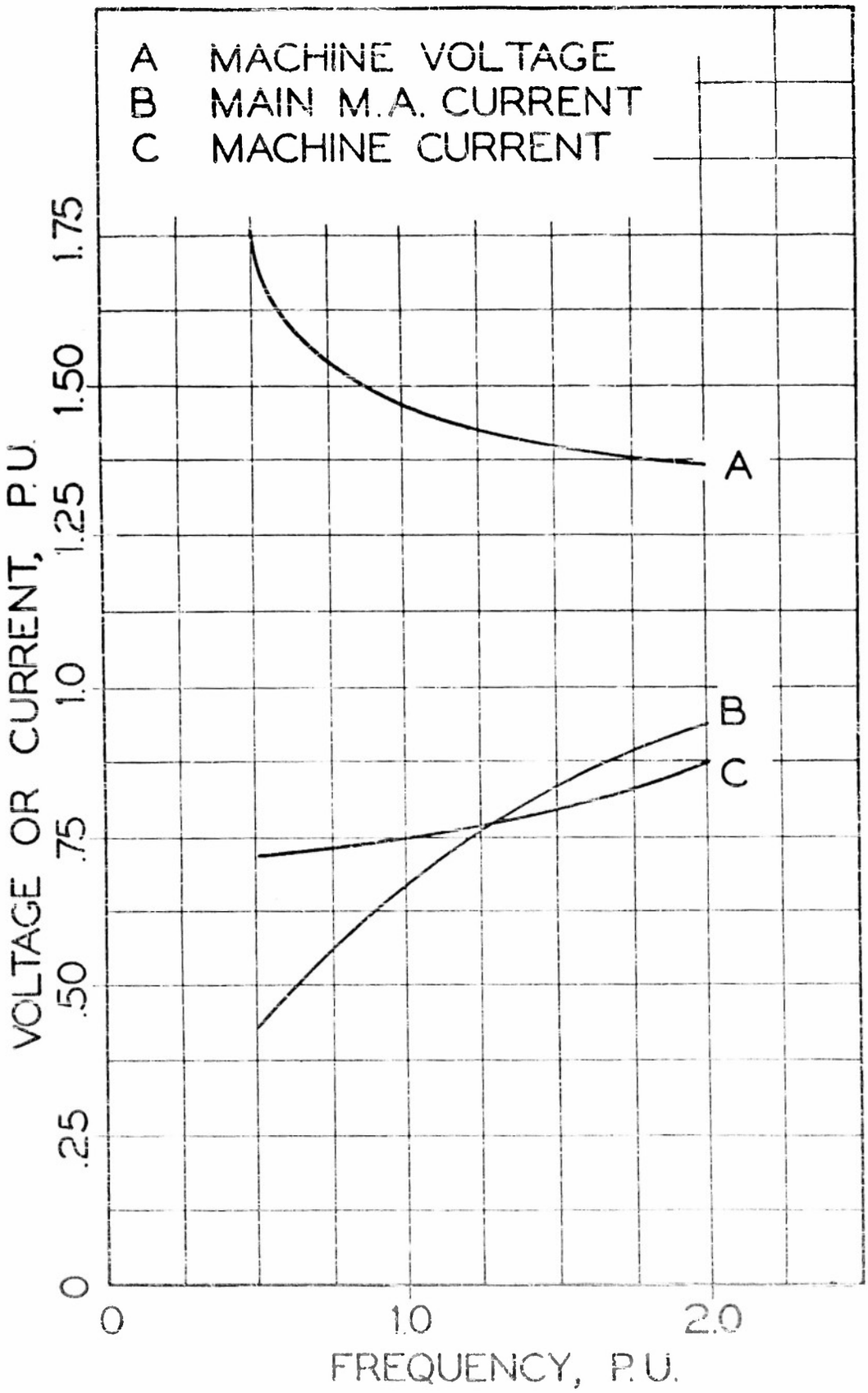
A MACHINE VOLTAGE
B MAIN M.A. CURRENT
C MACHINE CURRENT
VOLTAGE OR CURRENT, P.U.
0
.25
.50
.75
1.0
1.25
1.50
1.75
A
B
C
0
1.0
2.0
FREQUENCY, P.U.

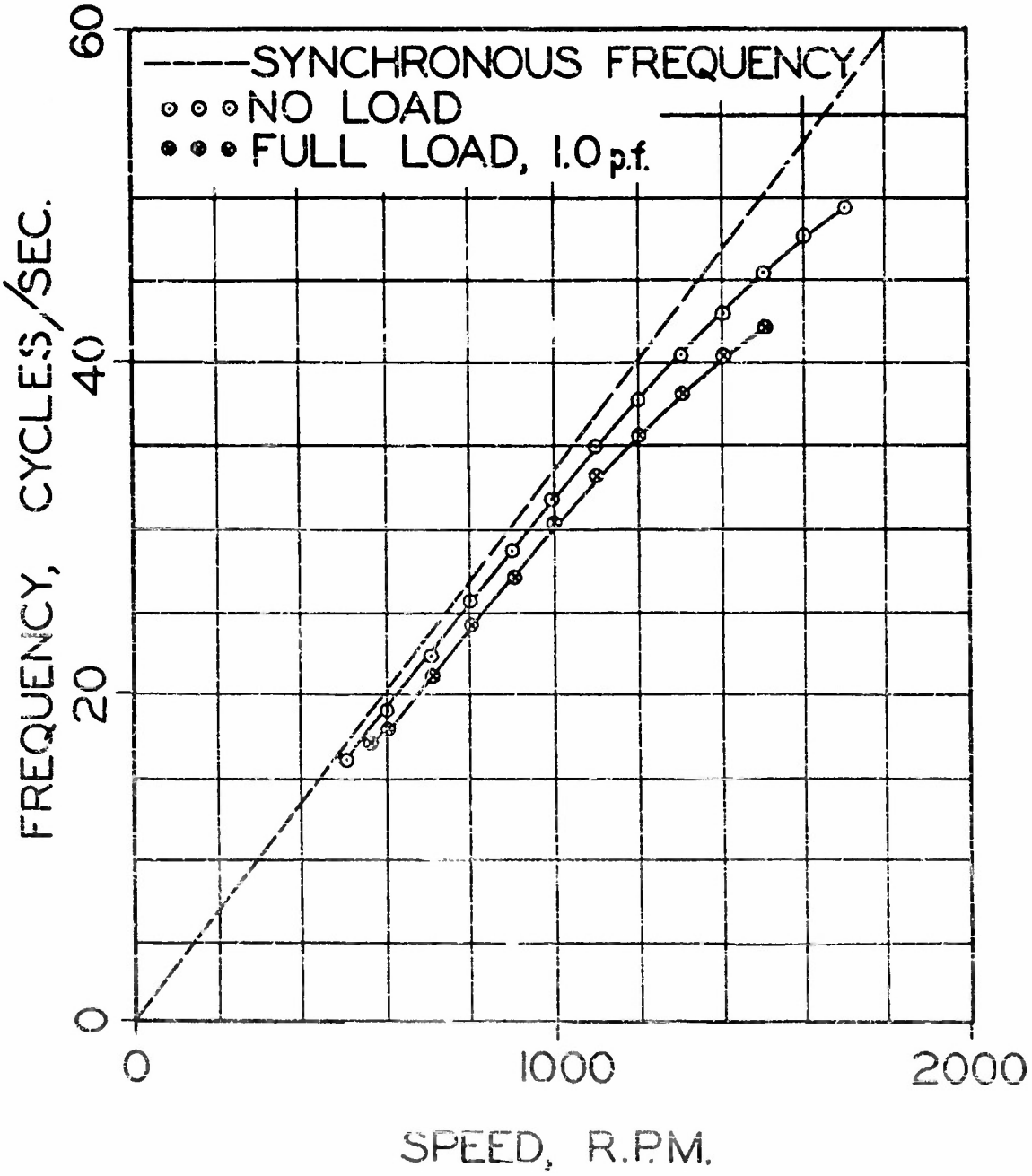
----SYNCHRONOUS FREQUENCY
NO LOAD
FULL LOAD, 1.0 p.f.
FREQUENCY, CYCLES/SEC.
0
20
40
60
0
1000
2000
SPEED, R.P.M.

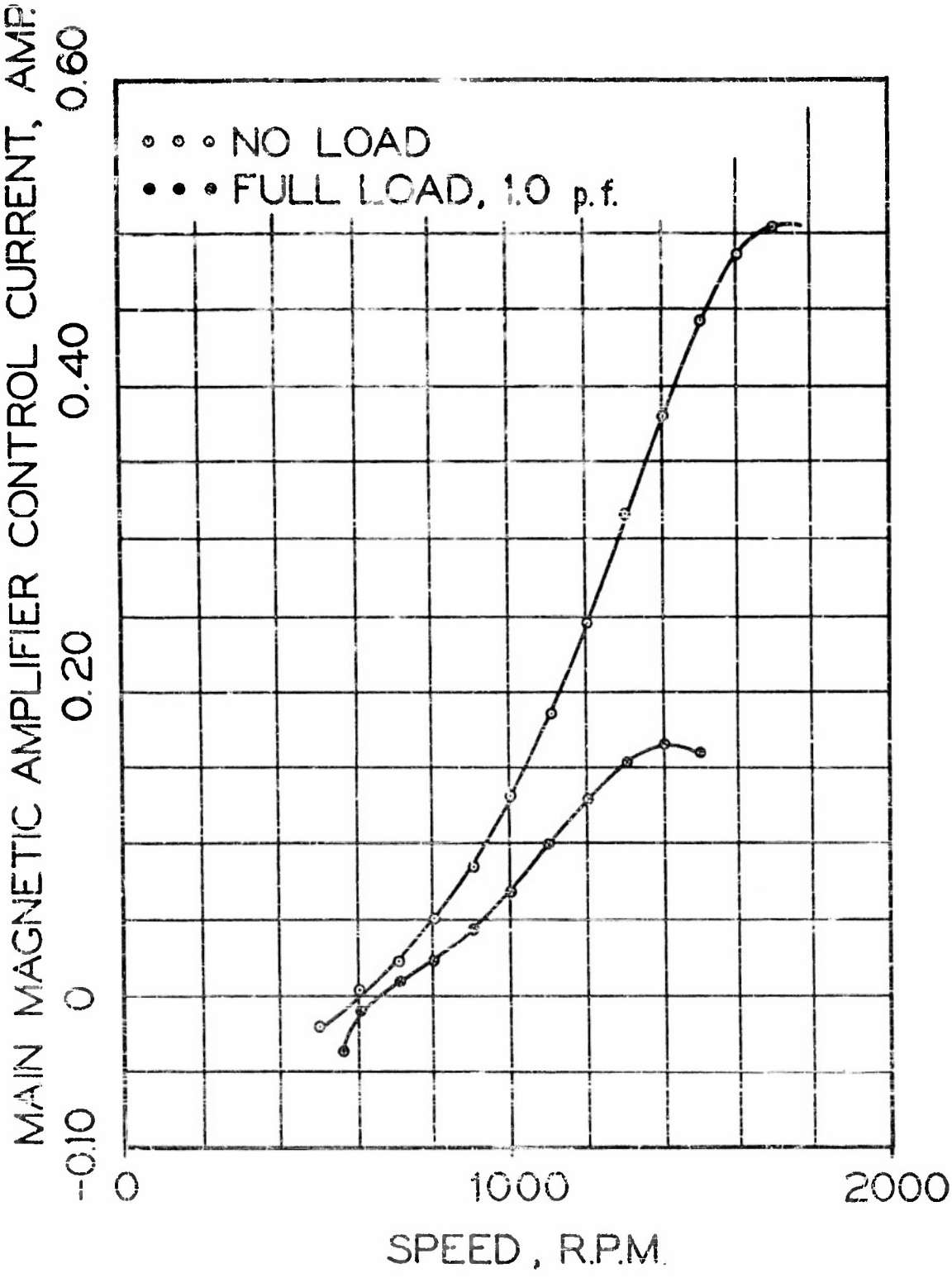
MAIN MAGNETIC AMPLIFIER CONTROL CURRENT, AMP.
0.60
0.40
0.20
0
-0.10
NO LOAD
FULL LOAD, 1.0 p.f.
0
1000
2000
SPEED, R.P.M.

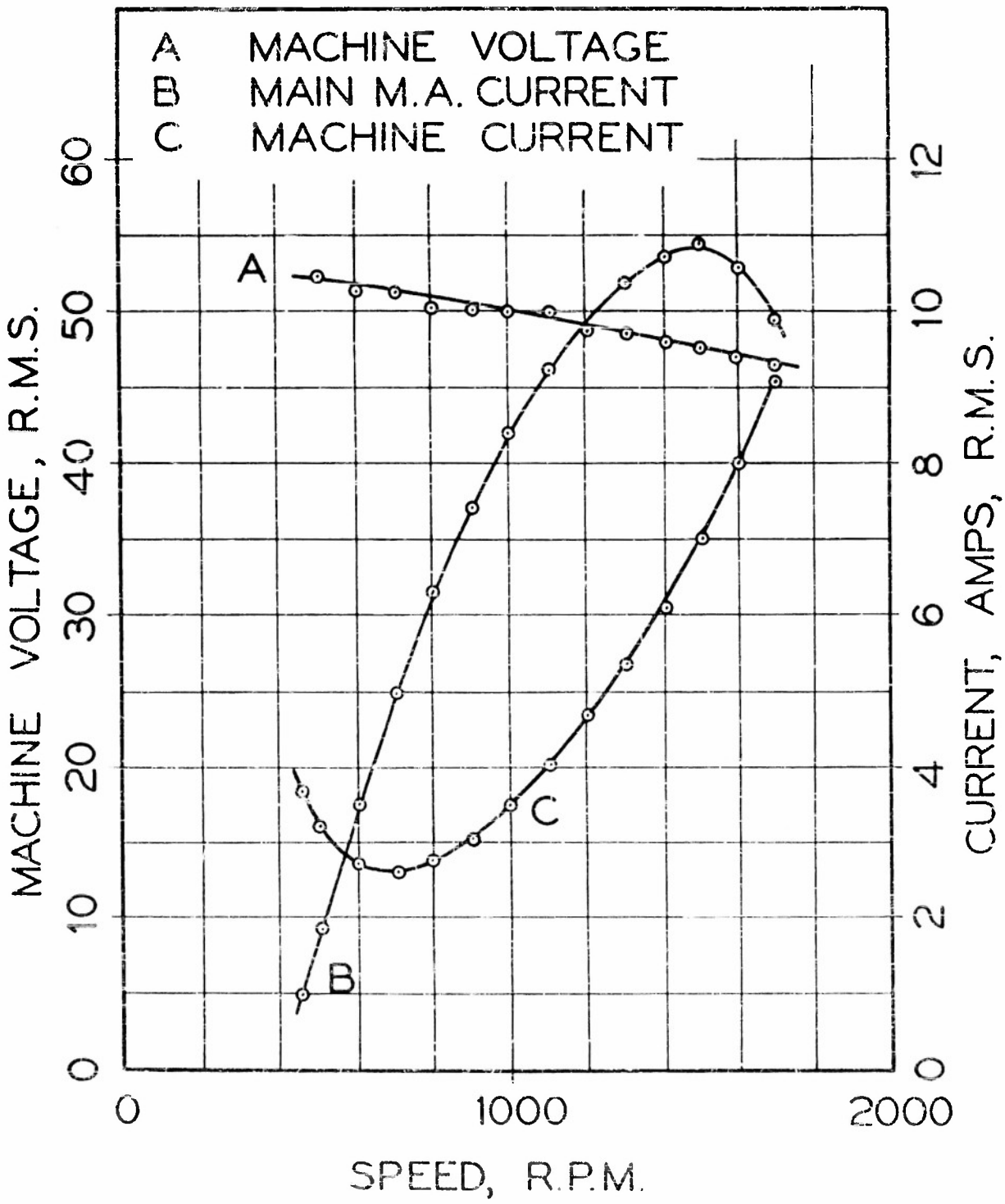
A MACHINE VOLTAGE
B MAIN M.A. CURRENT
C MACHINE CURRENT
A
B
C
MACHINE VOLTAGE, R.M.S.
CURRENT, AMPS, R.M.S.
SPEED, R.P.M.
0
10
20
30
40
50
60
0
2
4
6
8
10
12
0
1000
2000

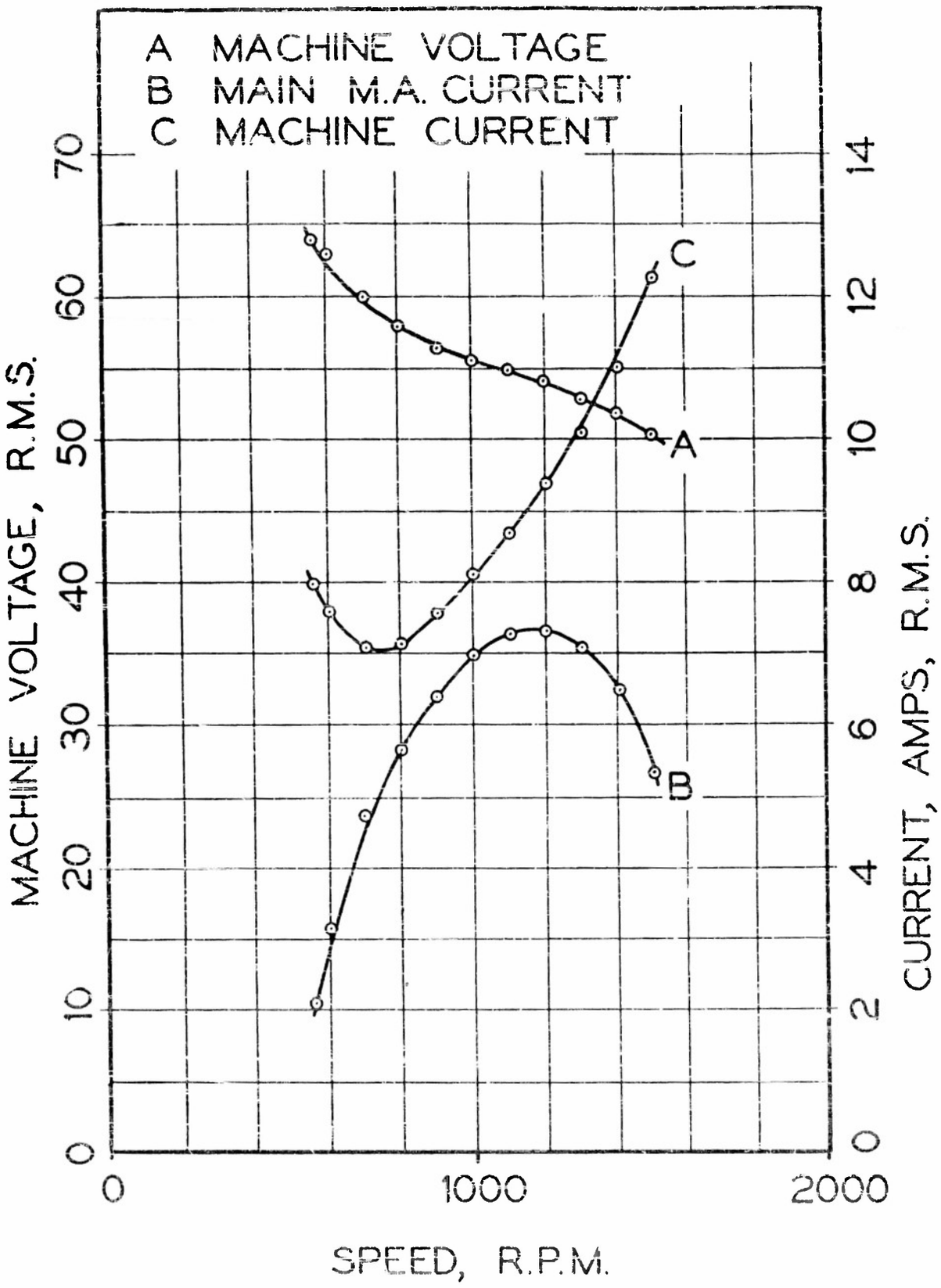
A MACHINE VOLTAGE
B MAIN M.A. CURRENT
C MACHINE CURRENT
MACHINE VOLTAGE, R.M.S.
CURRENT, AMPS, R.M.S.
SPEED, R.P.M.
0
10
20
30
40
50
60
70
0
2
4
6
8
10
12
14
0
1000
2000
A
B
C

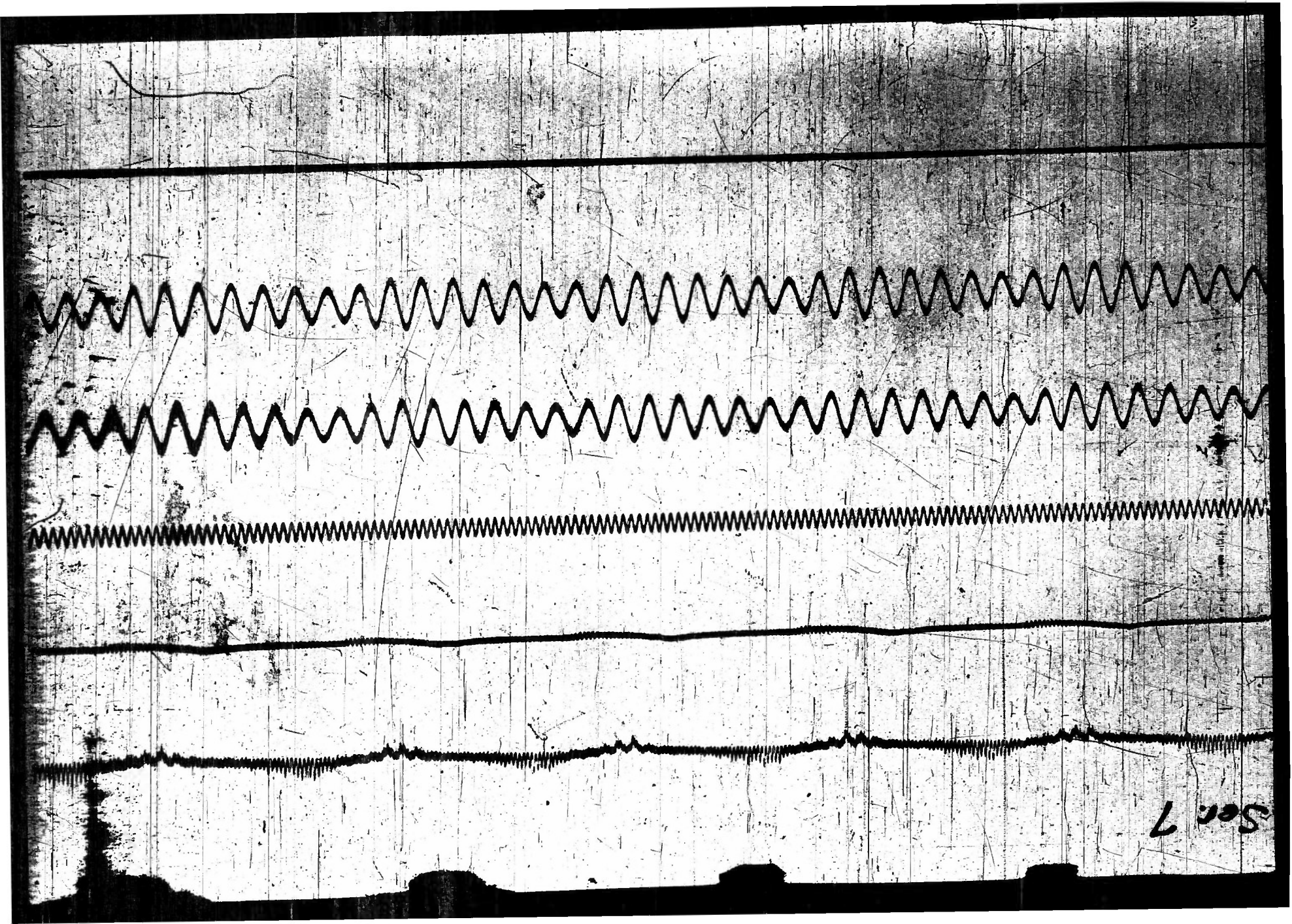
Sec 7

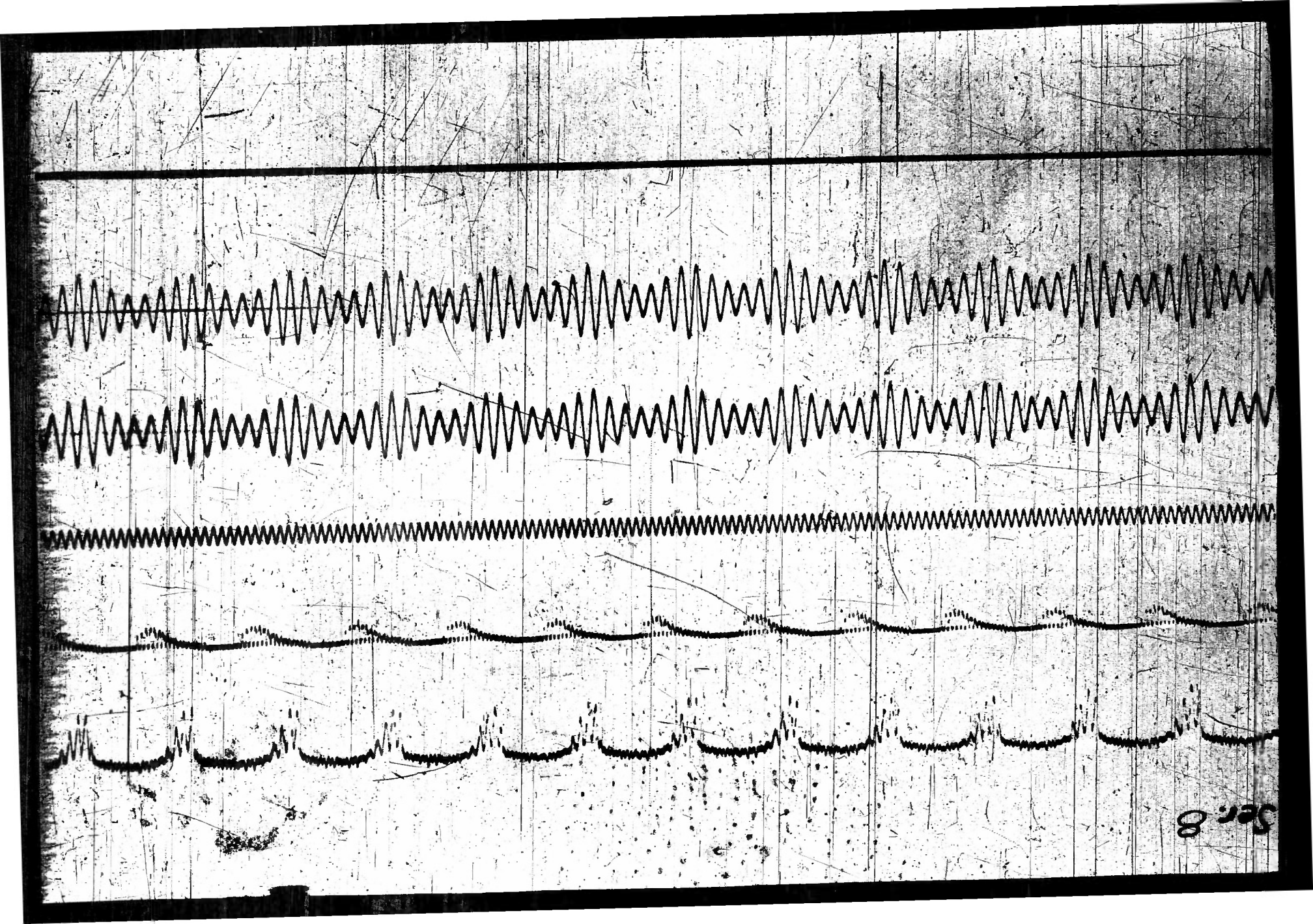
Sec. 8

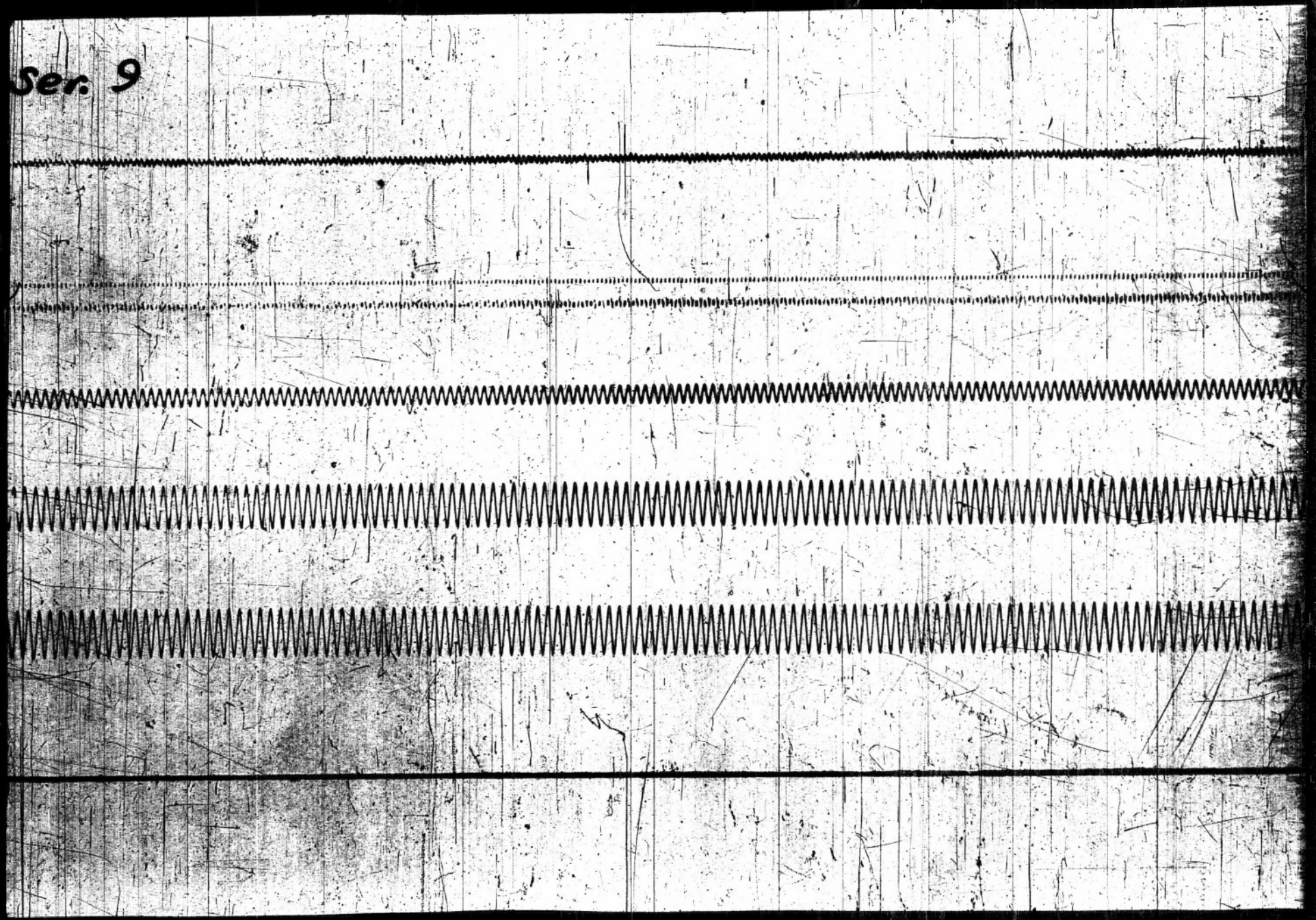
Ser. 9

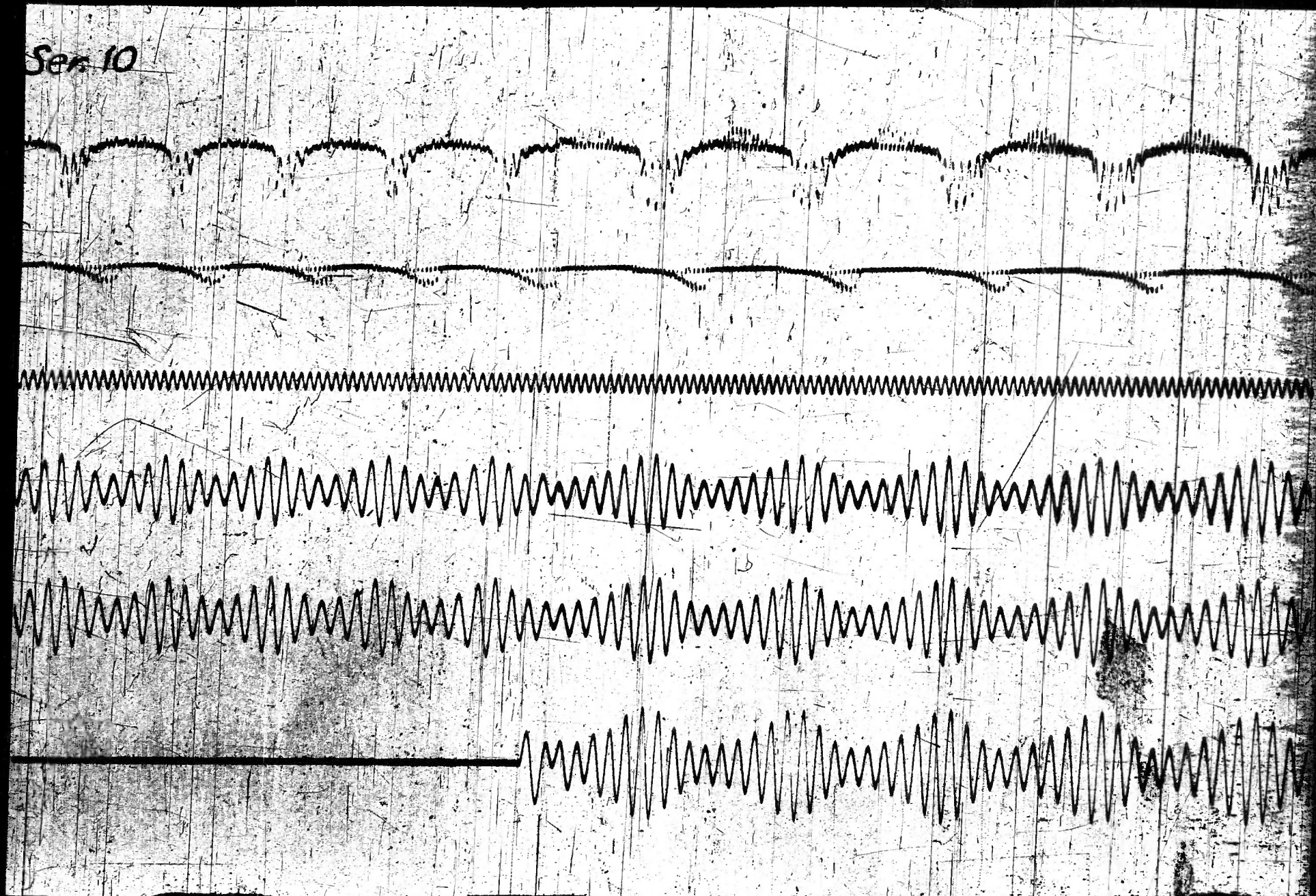
Ser. 10

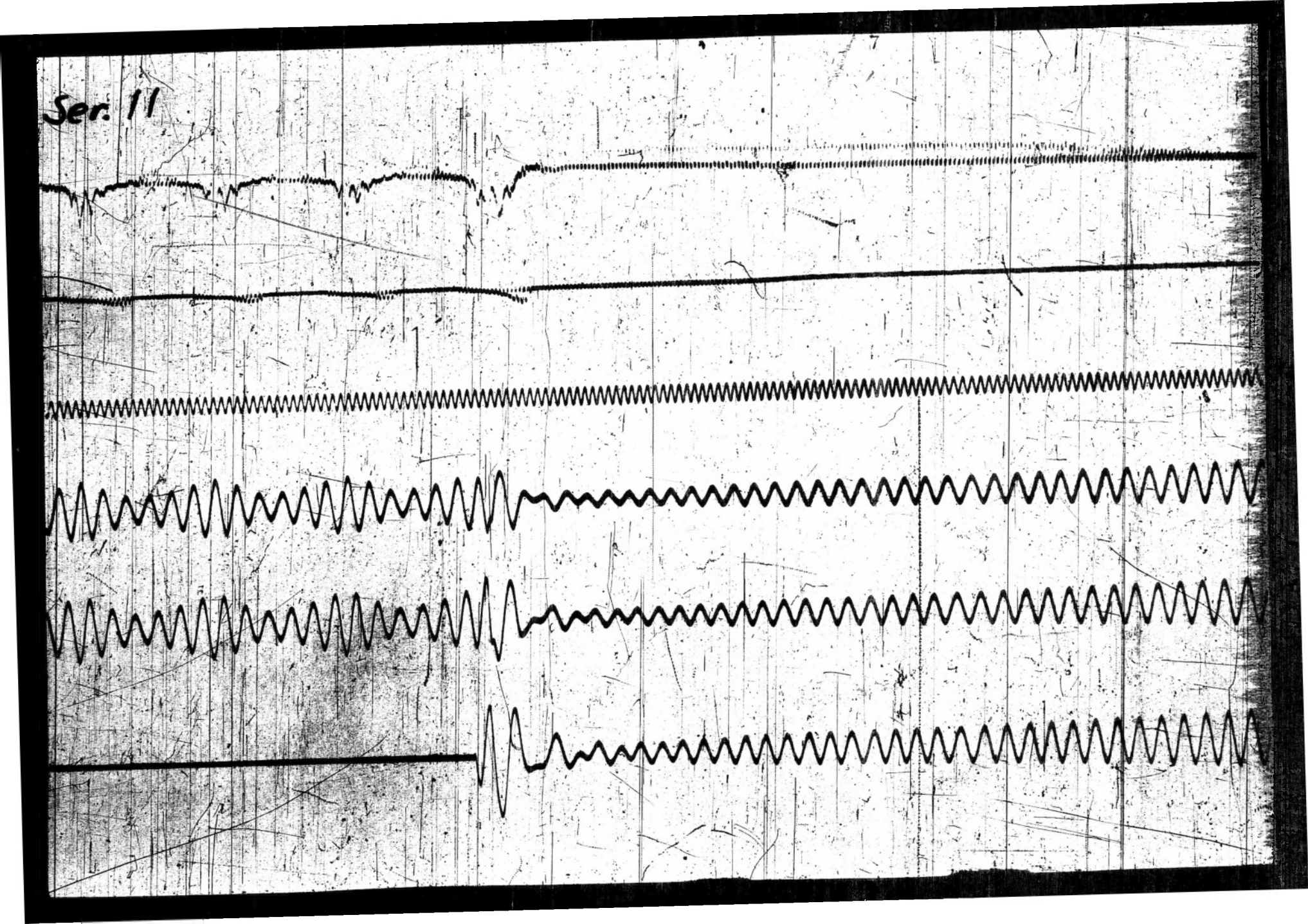
Ser. 11

Ser. 12

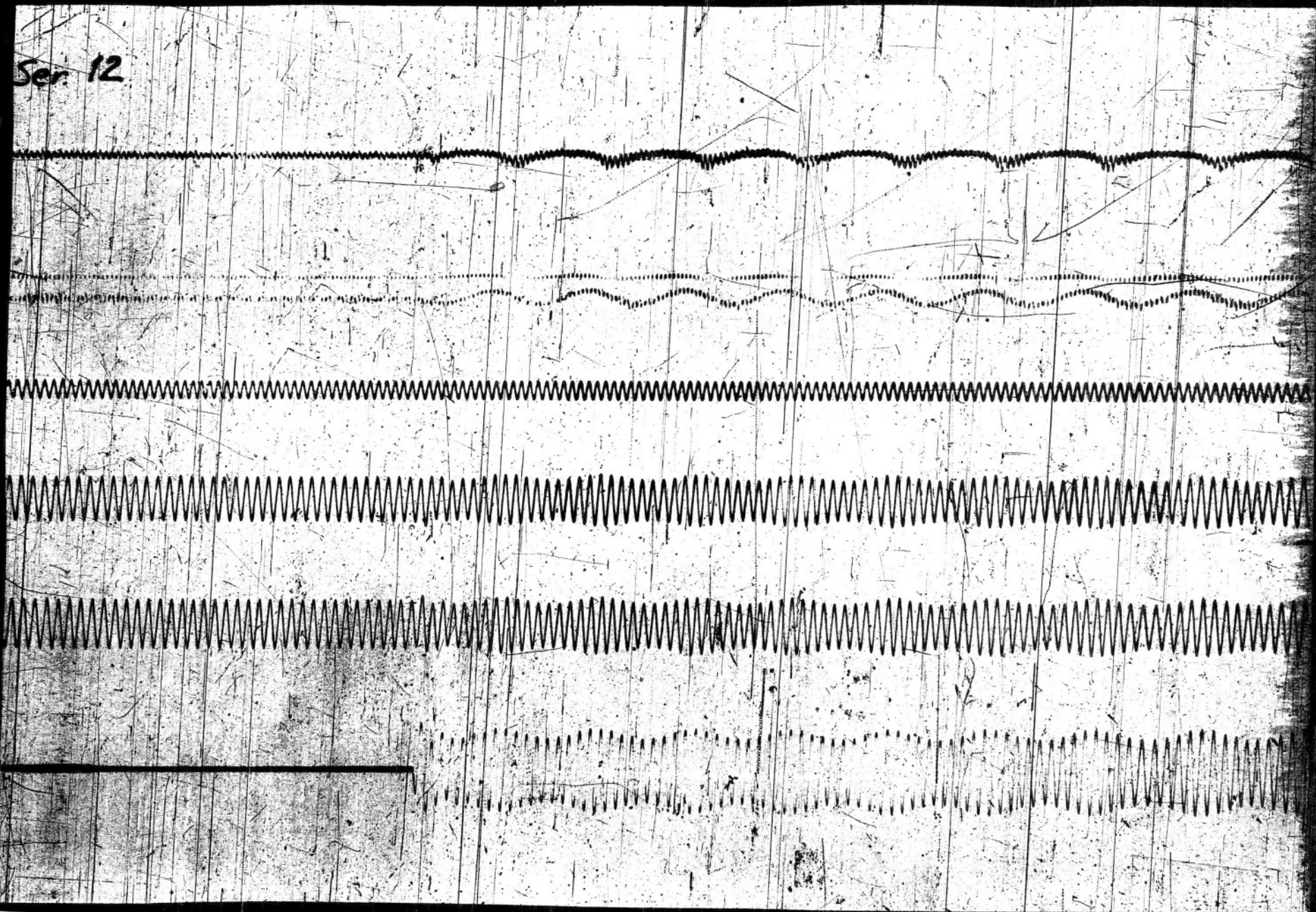

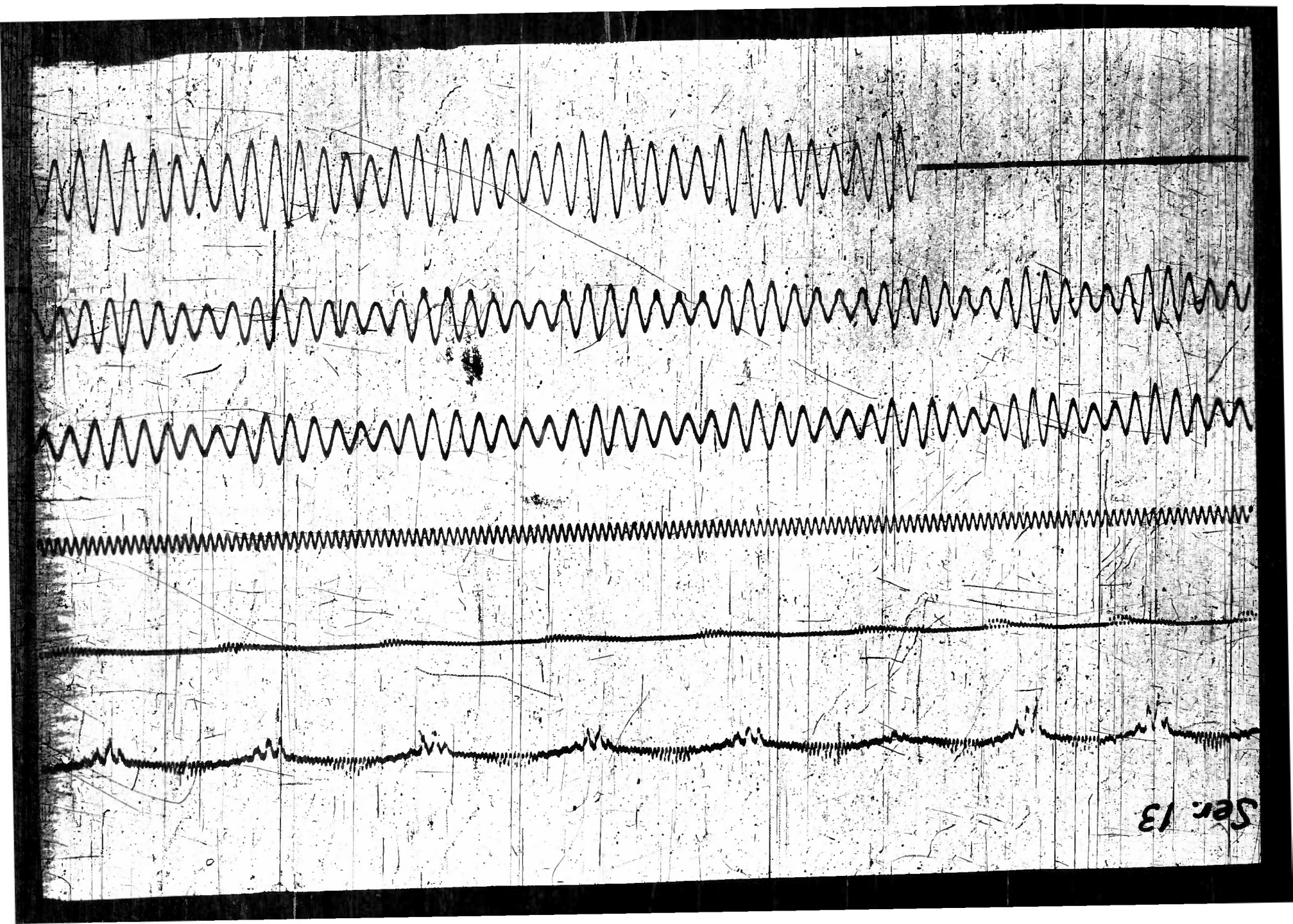
Ser 13

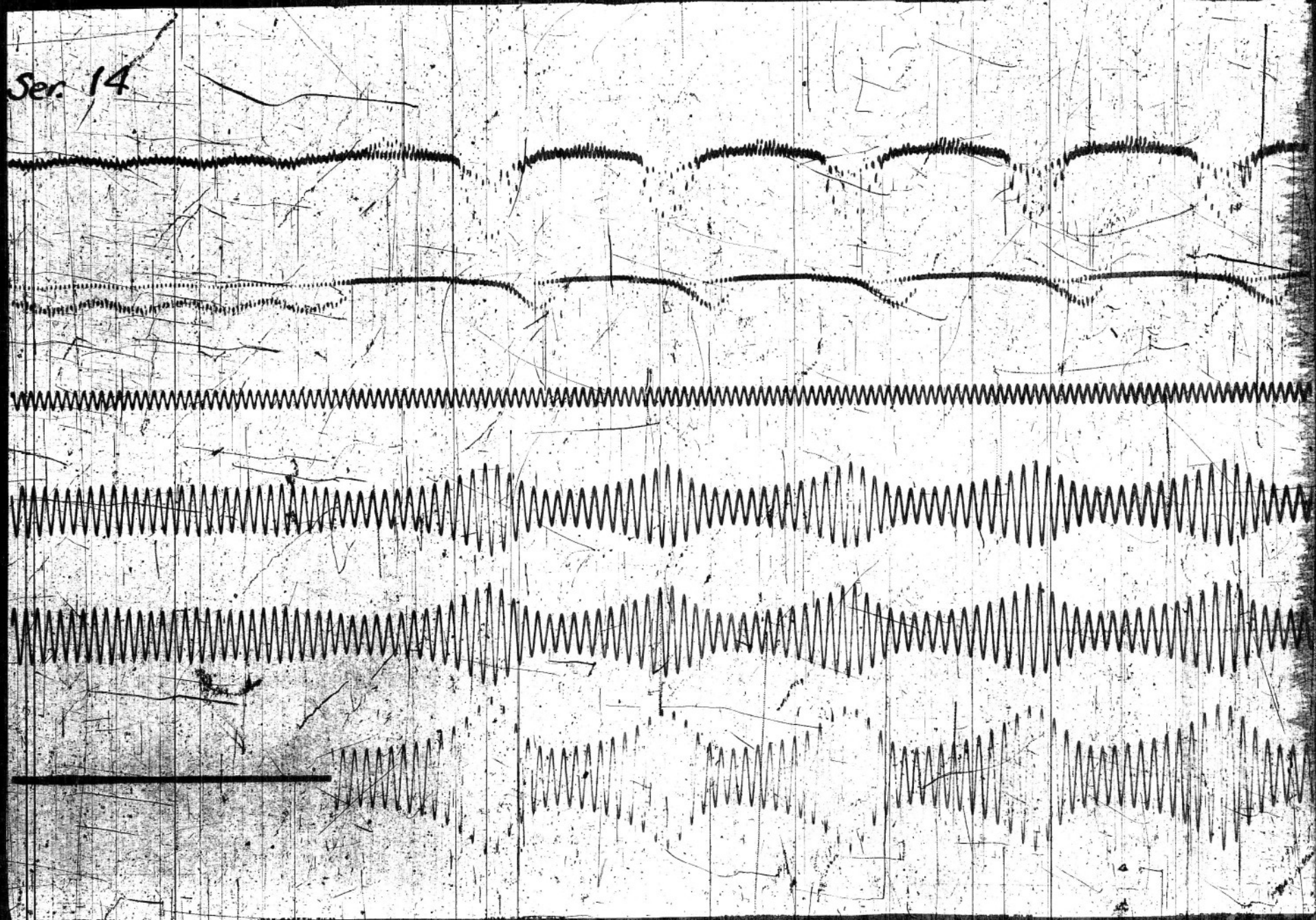
Ser. 14
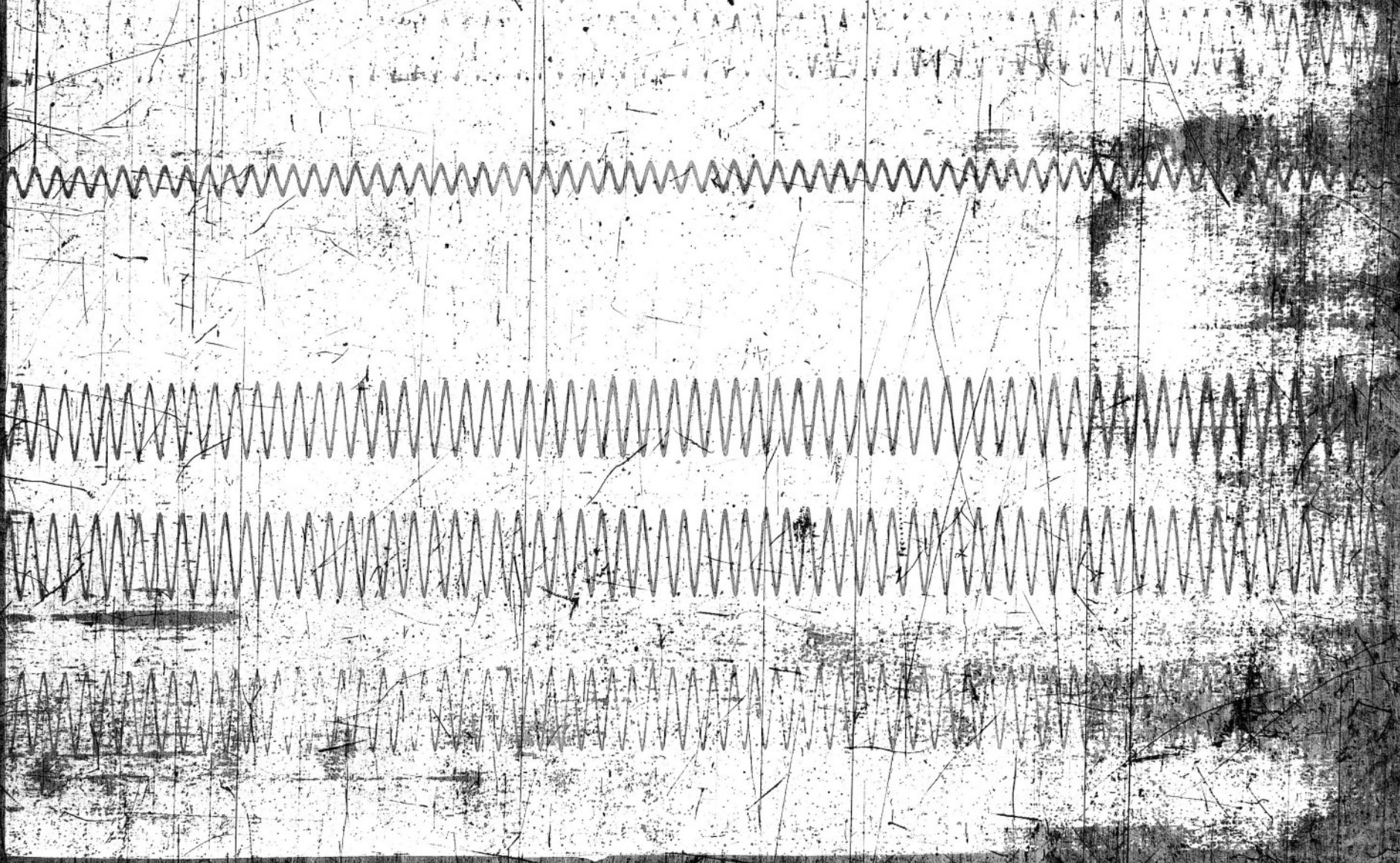
Sec 15