Armed Services Technical Information Agency

Because of our limited supply, you are requested to return this copy WHEN IT HAS SERVED YOUR PURPOSE so that it may be made available to other requesters. Your cooperation will be appreciated.

AD 38012

NOTICE: WHEN GOVERNMENT OR OTHER DRAWINGS, SPECIFICATIONS OR OTHER DATA ARE USED FOR ANY PURPOSE OTHER THAN IN CONNECTION WITH A DEFINITELY RELATED GOVERNMENT PROCUREMENT OPERATION, THE U. S. GOVERNMENT THEREBY INCURS NO RESPONSIBILITY, NOR ANY OBLIGATION WHATSOEVER; AND THE FACT THAT THE GOVERNMENT MAY HAVE FORMULATED, FURNISHED, OR IN ANY WAY SUPPLIED THE SAID DRAWINGS, SPECIFICATIONS, OR OTHER DATA IS NOT TO BE REGARDED BY IMPLICATION OR OTHERWISE AS IN ANY MANNER LICENSING THE HOLDER OR ANY OTHER PERSON OR CORPORATION, OR CONVEYING ANY RIGHTS OR PERMISSION TO MANUFACTURE, USE OR SELL ANY PATENTED INVENTION THAT MAY IN ANY WAY BE RELATED THERETO.

Reproduced by

DOCUMENT SERVICE CENTER

KNOTT BUILDING, DAYTON, 2, OHIO

UNCLASSIFIED

AD No. 38012
ASTIA FILE COPY

THE UNIVERSITY OF TENNESSEE

DEPARTMENT OF ELECTRICAL ENGINEERING

DEVELOPMENT OF A HIGH FREQUENCY STEERABLE ANTENNA

FURTHER DISSEMINATION IS AUTHORIZED ONLY TO MILITARY AGENCIES.

INTERIM DEVELOPMENT REPORT NO. 22

10 July 1954

Navy Department Bureau of Ships
Electronics Divisions
Contract No. NObsr-57448 Index No. NE-091035 ST7

A PROJECT OF THE ENGINEERING EXPERIMENT STATION
THE UNIVERSITY OF TENNESSEE COLLEGE OF ENGINEERING
Knoxville, Tennessee

INTERIM DEVELOPMENT REPORT

FOR

DEVELOPMENT OF A HIGH FREQUENCY

STEERABLE ANTENNA

This report covers the period
1 June 1954 to 30 June 1954

ENGINEERING EXPERIMENT STATION
THE UNIVERSITY OF TENNESSEE
KNOXVILLE, TENNESSEE

Navy Department

Electronics Divisions

Bureau of Ships

Contract No. NObsr-57448

Index No. NE-091035 ST7

10 July 1954

Copy No. 3

ABSTRACT

This report covers work done on Contract No. NObsr-57448, Index No. NE-091035 ST7, at The University of Tennessee during the month of June 1954.

The following was accomplished:

1. Work was begun on calculation of the total field $\left(\sqrt{E_\theta^2 + E_\phi^2}\right)$ for the horizontal patterns of the vertically stacked rhombic antenna arrays.

2. Preliminary experimental investigations of a rhombic array which consists of a number of rhombic antennas arranged around a circle, each antenna having one leg common to the adjacent antenna, have been made. Experimental results indicate that this so-called "closed rosette" array of rhombics has characteristics which may be of value to this project.

3. Theoretical and experimental radiation patterns of the circular traveling wave antenna have been obtained at several different frequencies. The first draft of a detailed report on the circular traveling wave antenna has been nearly completed and is being edited and corrected.

PART I.

Purpose

This project involves the development of a high frequency steerable antenna having the following characteristics:

1. It shall be operable throughout the frequency range of 4 to 32 megacycles per second.

2. It shall be capable of four, or more, simultaneous transmissions on different frequencies, and at different azimuth and elevation angles.

3. For each transmission, it shall be capable of being directed to any azimuth angle and to any elevation angle between the horizon and 30° above the horizon.

The communication system shall provide reliable 24-hour day-to-day communication with a 20-decibel signal-to-noise ratio. The ranges to be covered are from approximately 500 nautical miles to 4000 nautical miles.

The development consists of two phases:

Phase I. Theoretical and experimental studies.

Phase II. Development of design criteria.

General Factual Data

Personnel:

F. V. Schultz	Project Director	55-1/2	Man-hours
W. O. Leffell	Assistant Professor	2	Man-hours
W. J. Bergman	Junior Engineer	176	Man-hours
H. P. Neff	Junior Engineer	173	Man-hours
J. J. Elson	Technical Editor	-1/2	Man-hours
Cornelia Cate	Secretary	59	Man-hours
F. Collins	Draftsman	14	Man-hours
L. Phillips	Technician	20	Man-hours
P. Alfrey	Student Computer	29	Man-hours
B. Bodenheimer	Student Computer	34	Man-hours
L. Craig	Student Computer	22	Man-hours
D. Guhne	Student Computer	13	Man-hours
H. Knox	Student Computer	61	Man-hours
G. Rolfe	Student Computer	56	Man-hours
T. Simpson	Student Computer	108	Man-hours
G. C. Watkins	Student Computer	8-1/2	Man-hours
L. Zollinger	Student Computer	18	Man-hours
Louise Childress	Multilith Operator	1	Man-hours

References

Bruce, E., Beck, A. C., and Lowry, L. R., "Horizontal Rhombic Antennas," Bell System Technical Journal, Vol. 14, pp. 135-138, January 1935.

Foster, Donald, "Radiation from Rhombic Antennas," Proceedings IRE, Vol. 25, pp. 1327-1353, October 1937.

Harper, A. E., Rhombic Antenna Design, D. Van Nostrand Co., Inc., New York, 1941.

Jordan, Edward C., Electromagnetic Waves and Radiating Systems, Prentice-Hall, Inc., New York, 1950.

Kraus, J. D., Antennas, McGraw-Hill Book Co., New York and London, 1950.

McLachlan, N. W., Bessel Functions for Engineers, Clarendon Press, Oxford, 1934.

Terman, F. E., Radio Engineers' Handbook, McGraw-Hill Book Co., New York and London, 1943.

Watson, G. N., Theory of Bessel Functions, Cambridge University Press, Cambridge, 1922.

Detailed Factual Data

1. Preliminary experimental investigations have been made of the "closed rosette" antenna shown in Fig. 1. Results indicate that the directional characteristics of one antenna in this array, when excited alone, are not appreciably different from the directional characteristics of a rhombic antenna removed from nearby antennas.

If six antennas are used in a "closed rosette" array of rhombics, fourteen supporting poles are required at the most. On the other hand, if six rhombic antennas are used in an ordinary rosette, twenty-four supporting poles are required. Thus, at least ten supporting poles are eliminated with the "closed rosette" array. Also, the "closed rosette" will realize a considerable saving in the amount of acreage required.

2. An experimental radiation pattern of the circular traveling wave antenna has been obtained at a frequency of 2800 mc, the circumference of the model antenna at this frequency being 14 wave lengths. This pattern indicates that at these higher frequencies, at which the circular traveling wave antenna becomes comparable in size to a good rhombic antenna, the radiation characteristics of the single-ring antenna become less desirable than those obtained at the lower frequencies.

Theoretical radiation patterns are being obtained for several different values of antenna parameters. Thus far, very good correlation between theoretical and experimental results has been obtained. Calculation of the radiation pattern for two concentric circular traveling wave antennas is in progress to determine if this configuration will produce any decided improvement in the radiation characteristics over those of a single antenna.

A preliminary draft of the report on the circular traveling wave antenna is being edited and corrected. This report will contain the mathematical analysis of the antenna in addition to the experimental techniques used to construct, and obtain radiation patterns from, a test model. All of the radiation patterns, theoretical and experimental, will also be presented in this report.

DEPARTMENT OF ELECTRICAL ENGINEERING - ENGINEERING EXPERIMENT STATION
THE UNIVERSITY OF TENNESSEE

PROJECT PERFORMANCE AND SCHEDULE

Index No. NE-091035 ST7

Contract No. NObsr-57448

Date: 10 July 1954

Period Covered: 1/6/54 to 30/6/54

Legend: Work Performed; Schedule of Projected Operation

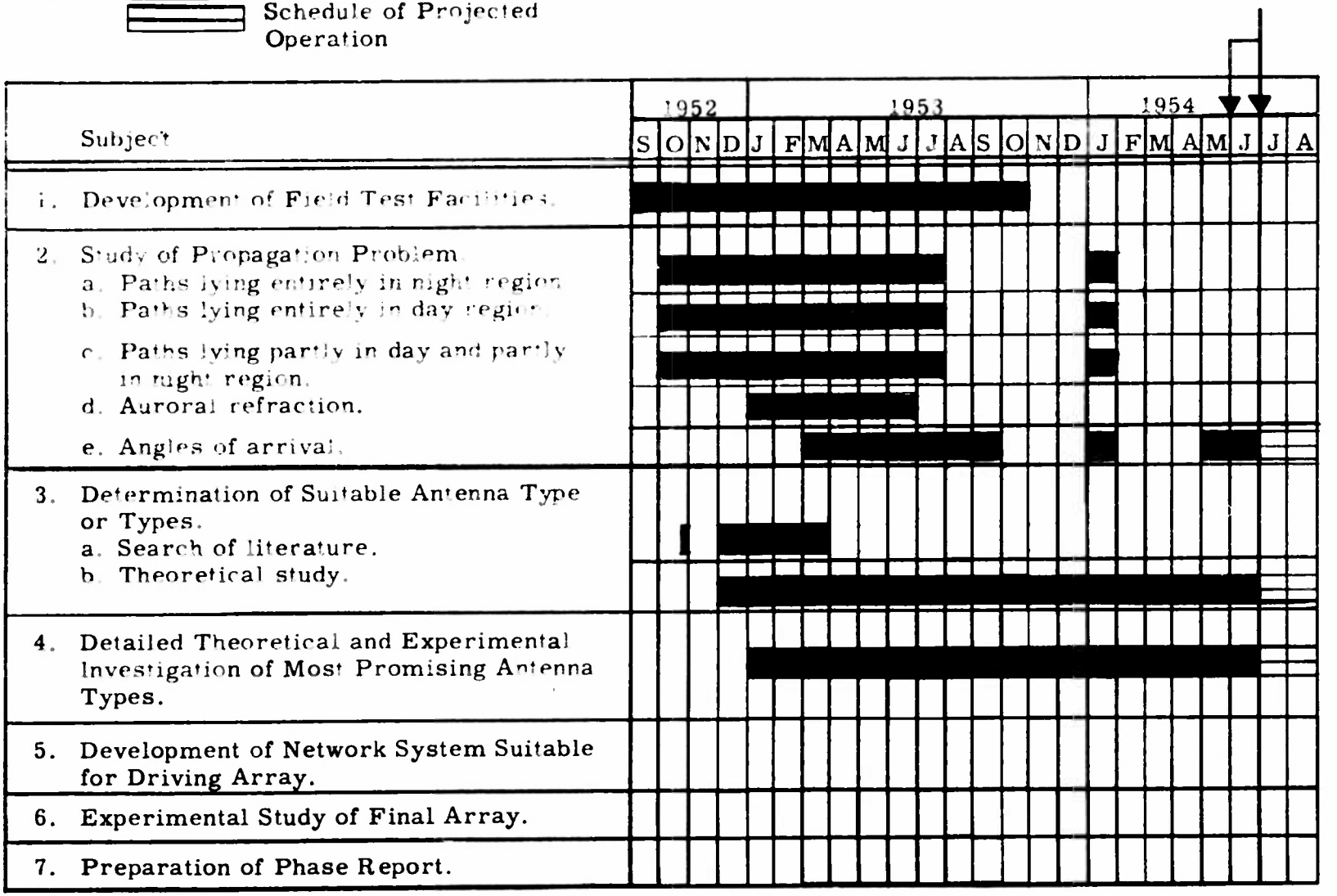

Conclusions

None.

PART II

Program for Next Interval

1. Horizontal patterns for stacked rhombic arrays will continue to be calculated for both the phi-polarized and theta-polarized components of the radiated field.

2. Preparation of a detailed report on the circular traveling wave antenna will be continued. Radiation patterns, both theoretical and experimental, will be obtained at various frequencies, and in addition the radiation pattern of two concentric antennas will be further investigated.

3. Work will proceed on angle-of-arrival data.

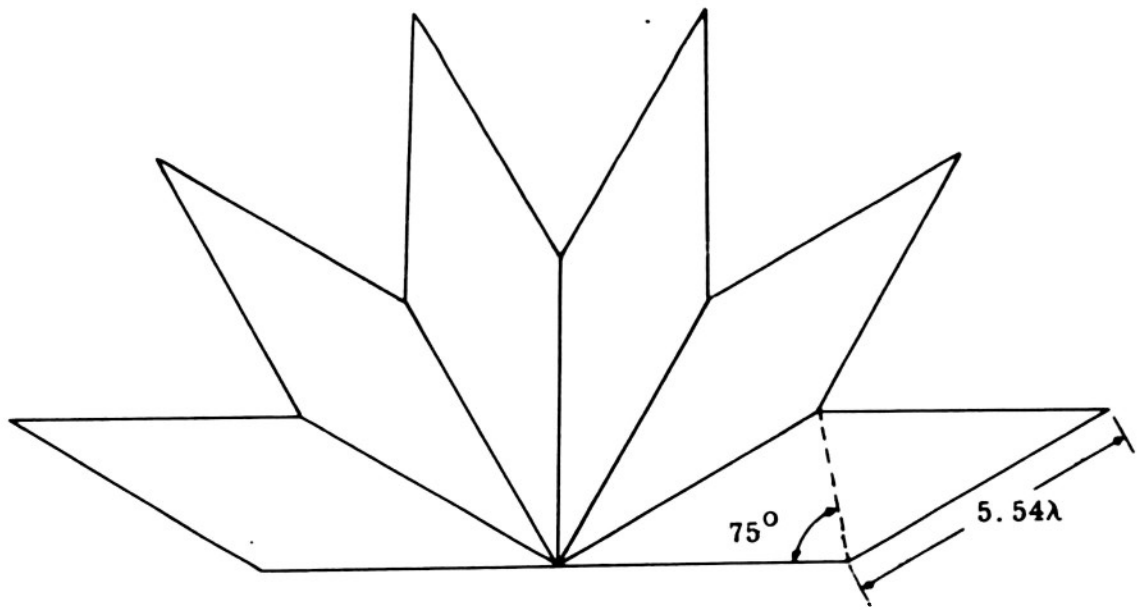

Fig. 1. Closed rosette array of rhombic antennas

Armed Services Technical Information Agency

Because of our limited supply, you are requested to return this copy WHEN IT HAS SERVED YOUR PURPOSE so that it may be made available to other requesters. Your cooperation will be appreciated.

AD 380112

NOTICE: WHEN GOVERNMENT OR OTHER DRAWINGS, SPECIFICATIONS OR OTHER DATA ARE USED FOR ANY PURPOSE OTHER THAN IN CONNECTION WITH A DEFINITELY RELATED GOVERNMENT PROCUREMENT OPERATION, THE U. S. GOVERNMENT THEREBY INCURS NO RESPONSIBILITY, NOR ANY OBLIGATION WHATSOEVER; AND THE FACT THAT THE GOVERNMENT MAY HAVE FORMULATED, FURNISHED, OR IN ANY WAY SUPPLIED THE SAID DRAWINGS, SPECIFICATIONS, OR OTHER DATA IS NOT TO BE REGARDED BY IMPLICATION OR OTHERWISE AS IN ANY MANNER LICENSING THE HOLDER OR ANY OTHER PERSON OR CORPORATION, OR CONVEYING ANY RIGHTS OR PERMISSION TO MANUFACTURE, USE OR SELL ANY PATENTED INVENTION THAT MAY IN ANY WAY BE RELATED THERETO.

Reproduced by

DOCUMENT SERVICE CENTER

KNOTT BUILDING, DAYTON, 2, OHIO

UNCLASSIFIED