UNCLASSIFIED

AD NUMBER

AD056013

NEW LIMITATION CHANGE

TO

Approved for public release, distribution unlimited

FROM

Distribution authorized to U.S. Gov't. agencies and their contractors; Operational and Administrative Use; Jan 1955. Other requests shall be referred to Wright Air Development Center, Air Research and Development Command, Wright-Patterson AFB, OH, 45433.

AUTHORITY

AFMC ltr, 19 Feb 2002

THIS PAGE IS UNCLASSIFIED

AD 560 13

Armed Services Technical Information Agency

Reproduced by

DOCUMENT SERVICE CENTER

KNOTT BUILDING, DAYTON, 2, OHIO

NOTICE: WHEN GOVERNMENT OR OTHER DRAWINGS, SPECIFICATIONS OR OTHER DATA ARE USED FOR ANY PURPOSE OTHER THAN IN CONNECTION WITH A DEFINITELY RELATED GOVERNMENT PROCUREMENT OPERATION, THE U. S. GOVERNMENT THEREBY INCURS NO RESPONSIBILITY, NOR ANY OBLIGATION WHATSOEVER; AND THE FACT THAT THE GOVERNMENT MAY HAVE FORMULATED, FURNISHED, OR IN ANY WAY SUPPLIED THE SAID DRAWINGS, SPECIFICATIONS, OR OTHER DATA IS NOT TO BE REGARDED BY IMPLICATION OR OTHERWISE AS IN ANY MANNER LICENSING THE HOLDER OR ANY OTHER PERSON OR CORPORATION, OR CONVEYING ANY RIGHTS OR PERMISSION TO MANUFACTURE, USE OR SELL ANY PATENTED INVENTION THAT MAY IN ANY WAY BE RELATED THERETO.

UNCLASSIFIED

AD No. 56013
ASTIA FILE COPY

FC

48

TECHNICAL NOTE WCT 55-5

EMERGENCY FUEL SELECTOR VALVE TEST ON THE J47-GE-27 ENGINE AS INSTALLED ON F-86F AIRCRAFT

Lt. Dale A. Randall

Directorate of Flight and All-Weather Testing

January 1955

T-17M-14

Wright Air Development Center
Air Research and Development Command
United States Air Force
Wright-Patterson Air Force Base, Ohio

WRIGHT AIR DEVELOPMENT CENTER
AIR RESEARCH AND DEVELOPMENT COMMAND
UNITED STATES AIR FORCE
WRIGHT-PATTERSON AIR FORCE BASE, OHIO

Technical Note
WCT 55-5
Author: Lt Dale A. Randall
13 January 1955

Evaluation Branch
Directorate of Flight and
All-Weather Testing
T-17M-14

EMERGENCY FUEL SELECTOR VALVE TEST ON THE J47-GE-27 ENGINE AS INSTALLED ON F-86F AIRCRAFT

SUMMARY

Some of the operating characteristics of the J47-GE-27 engine were investigated with the emergency fuel selector valve installed, in an attempt to determine whether the selector valve had any adverse effects on engine operation. This test did not disclose any adverse effects on engine operation. The selector valve prevented the emergency fuel system from over-riding the main fuel system; however, the emergency fuel system does not take over automatically in case of a main fuel system failure.

Approved by: KENNETH W. SCHULTZ
Colonel, USAF
Director of Flight and All-Weather Testing
Hq Wright Air Development Center

INTRODUCTION

1. An investigation of the power control deficiencies in the F-86F aircraft revealed that several fatal crashes could be directly attributed to throttle bursting on the emergency fuel system. It was believed that in many instances the pilot made the throttle burst without realizing he was operating on the emergency system. It was not possible with the standard fuel system to eliminate this condition or to provide a warning device; consequently, the emergency fuel selector valve was developed to provide positive selection of the system to be used and to provide an emergency system warning. It is realized that requiring the pilot to select the fuel system to be used, does away with the principle virtue of the standard system. This virtue is, the emergency fuel system automatically takes over in case of a main system failure, when stand by operation has previously been chosen.

2. Flight tests were conducted to evaluate certain engine operating characteristics with the emergency fuel selector valve installed, and to determine whether the selector valve was satisfactory. The subject tests were requested by the Controls Section of the Power Plant Laboratory, WCLPG-2, on a WADC Form 56 dated 26 August 1954, identification number WCLP 54-42. The tests were conducted at Wright-Patterson AFB under an F-1A priority from 17 November 1954 until 10 December 1954 and required 4:45 hours of flying time.

TEST ITEM AND INSTALLATION

3. The motor operated selector valve is a three-port device which positively isolates the main and emergency fuel systems from each other. The motor is pilot-actuated from a switch in the cockpit. As the pilot switches from "main" to "emergency", power is applied to the motor which opens the emergency inlet port and closes the main inlet port (See Figure 5B). The valve cycles in one second or less, and as the end position is reached, limit switches disconnect power from the motor and apply power to the cockpit light which indicates the emergency port is fully open. The main system is then completely isolated and can only regain control when the pilot selects the main system operation on the cockpit switch. An electrical power failure in either position cannot cause the valve to change position.

4. The compressor discharge pressure (CDP) dump valve has power applied when the standard selector switch is placed in the "test" position, thus simulating a failure of the main fuel system (See Figure 4). The emergency control (EC-2) solenoid has power applied only when the standard selector switch is in the "off" position. When the standard selector switch is in the "on" position both the Main Control (VS-2) and the EC-2 are poised to schedule engine fuel flow as the Selector Valve permits. When the emergency port is closed, the EC-2 maintains its scheduled pressure at

sensing line on the Restrictor Valve, but emergency pump fuel is bypassed through the EC-2. When the main port is closed main pump fuel is bypassed through the Fuel Pressure Control Valve and control valve inlet pressure is maintained according to the VS-2 initial cut in schedule.

5. The Selector Valve internal porting is such that during a switching cycle the total port area available to conduct engine fuel flow is never reduced below approximately 50% of the through area in the extreme positions. Engine fuel flow will never be completely interrupted during a switchover as long as either the main or emergency system is scheduling a pressure at the selector valve inlet. In the event of a complete loss of main system pressure, engine fuel flow would be interrupted until the valve motor was actuated from the cockpit opening the emergency port. If either system fails in such a way as to cause excessive engine fuel pressure, that system can be isolated by switching to the other system.

6. The Selector Valve system eliminates fuel system interference or override caused by (1) electrical power failure, (2) inadvertent selection of "standby" operation, and (3) mechanical failure of EC-2. (See Appendix A for discussion of standard system operation).

7. The emergency fuel selector valve was installed in the Power Take-Off (PTO) section. Installation of this valve required removal of the bullet nose, the fuel flow meter and hydraulic pump assembly to gain access to the rear portion of the PTO section. Hoses, elbows and other fittings were removed from the standard fuel system as required for installation of the selector valve. Emergency fuel selector valve kit parts are listed below:

a. Motor-operated Fuel Selector Valve 326C670.

b. Mounting Bracket for Selector Valve.

c. Emergency system Restrictor Valve 326C660.

d. New fitting on Emergency Fuel Pump Dischargeto mount Restrictor Valve.

e. New hose from Restrictor Valve Discharge to Selector Valve Emergency Inlet,

f. New Pipe from Main Fuel Filter Main Outlet to Selector Valve Main Inlet.

g. New hose from Selector Valve to Stopcock.

h. New inlet fitting for stopcock.

i. New 5-lead electrical cable from #1 Island Junction Box through island to Selector Valve.

j. New #1 Island Junction Box with added 5 pin amphenol connector to airframe wiring.

These parts were installed as shown in Figures 1 through 3. Two hundred forty man-hours were required to install the selector valve after the engine had been removed.

8. There are two DC electrical busses in the aircraft from which power can be taken for operating the selector valve. The primary bus is energized by the battery or by the generator when the generator is operating. The secondary bus is energized only when generator output is available. The airframe wiring for the selector valve is shown schematically in Figure 6. There are three possible ways of obtaining power to operate the selector valve and they are:

a. The valve may be wired to operate entirely from the secondary bus. This arrangement is not desirable because the selector valve cannot be operated if a generator failure occurs.

b. The valve may be wired to both the primary and secondary busses. The power for switching the valve to the "emergency" position would come from the primary bus and power for the "main" position would come from the secondary bus. This would allow the pilot to switch to the emergency fuel system after a generator failure but would not allow the pilot to return to the main fuel system.

c. The valve could be wired to operate from the primary bus only and generator failure would have no effect on the selector valve operation.

9. It was found that care must be exercised to prevent the fuel system piping from turning the anti-icing thermo-switch cover. When the test installation was made this cover turned and short circuited the anti-icing and screen actuating circuit. The cover was removed and insulation was placed inside the cover to prevent recurrence of this condition.

AIRCRAFT CONDITION RELATIVE TO THE TEST

10. The test aircraft is a standard production F-86F, USAF No. 52-4598 powered by a General Electric J47-GE-27 engine, S/N GE-008-516. The only change in the aircraft for the test was the installation of the Emergency Fuel Selector Valve. All take-offs were made with full internal fuel at an approximate gross weight of 14,800 pounds.

INSTRUMENTATION

11. The pilot read the following calibrated instruments:

Instrument	Calibrated Range
Engine	0-8000 RPM
Indicated Air Speed	45-650 Knots
Altitude	0-50,000 Feet
Free Air Temperature	-60 to 60°C

TEST PROCEDURES

12. All testing was conducted with the standard selector switch in the "on" position except when simulating failure of the main fuel system. Ground tests of the Emergency Fuel Selector Valve were conducted as follows:

a. The engine was started on the main fuel system.

b. The engine was started on the emergency fuel system.

c. The maximum RPM, the idle RPM, exhaust gas temperature on the main fuel system and maximum emergency RPM were set in accordance with existing Technical Orders.

d. At maximum RPM on the main fuel system the selector valve was switched to the emergency fuel system. After the emergency RPM stabilized the throttle was chopped to idle and the RPM was allowed to stabilize. The throttle was re-advanced slowly to full power and the emergency RPM was allowed to stabilize. The selector valve was switched to the main fuel system and the RPM was allowed to stabilize. All maximum RPM's and the stabilization time after a switch over were recorded.

e. Paragraph d was repeated three more times.

f. With the engine operating at maximum RPM on the main fuel system, a failure of the main fuel system was simulated by switching the standard selector switch to the "test" position. As the engine RPM dropped off, the Selector Valve was switched to the emergency fuel system.

g. Three throttle bursts were made on the main fuel system from idle to maximum RPM. The acceleration time was recorded from the initiation of the throttle burst until the instant prior to maximum RPM when the small slot fuel pressure cut back. All throttle bursts were one second or less.

13. Flight test of the emergency fuel selector valve were conducted at altitudes of 10,000, 20,000, 30,000, 40,000, 42,000 and 45,000 feet as follows:

a. The flight idle RPM was determined at 180 knots indicated air speed on the main fuel system and this value was recorded.

b. Switch overs were made at flight idle (180 knots) from "main" to "emergency" and "emergency" to "main". The time required for the RPM to stabilize after each switch over was recorded.

c. Throttle bursts were made at 180 knots indicated air speed on the main fuel system and the acceleration time was measured from initiation of the burst at flight idle RPM to the instant prior to maximum RPM when the small slot fuel pressure cut back. The acceleration time and maximum RPM were recorded.

d. A switch over from "main" to "emergency" to "main" at 6500 RPM (main) was accomplished to check for any tendency to over speed the engine on the emergency fuel system. The time required for the RPM to stabilize and the stabilized RPM were recorded after each switch over.

e. A high speed run was made at maximum engine RPM on both the main fuel system and the emergency fuel system. The maximum stabilized indicated air speed and the maximum engine speed were recorded on both fuel systems.

f. A failure of the main fuel system was simulated at maximum stabilized air speed on the main fuel system by switching the standard selector switch to the "test" position. Approximately five seconds after failing the main fuel system the selector valve was switched to "emergency" and the RPM drop off during this five second period was recorded.

14. The following operating limits were observed at all times during the test:

a. All operation was in accordance with existing Technical Orders.

b. A switch over from "main" to "emergency" was not accomplished below 6360 RPM (80% RES) without first retarding the throttle to idle, because of the danger of stalling the compressor and damaging the engine and aircraft. There were no limits placed on switch overs from "emergency" to "main".

15. The maximum exhaust gas temperature and the small slot fuel pressure were recorded at maximum stabilized indicated air speed on the main fuel system. The free air temperature during the throttle bursts was also recorded.

DATA REDUCTION

16. The data in this report were corrected for instrument error, unless otherwise noted on the data sheet. The data are accurate to the values indicated below:

Data	Accuracy
Indicated Air Speed	±5 Knots
Free Air Temperature	±1°C
Time	±1 Sec
RPM	±10 RPM
Altitude	Maximum error ±500 Feet

17. The acceleration rate was calculated from this formula:

$$\frac{\text{Max RPM} - \text{Idle RPM}}{60\ \text{Sec/Min} \times \text{Acceleration Time (Sec)}} = \text{acceleration rate (Rev./Sec/Sec)}$$

TEST RESULTS AND DISCUSSION

18. Engine operation during this test was normal. This should not be interpeted to mean that the installation of the emergency fuel selector valve cured any of the deficiencies of the VS-2 or the EC-2 fuel regulators but rather that the engine exhibited the same operating characteristics it exhibited prior to installation of the selector valve. The following conditions existed while operating on the main fuel system during the test and are not results of the test, but are included for information purposes only:

a. The engine operated very rough and surged at maximum engine speed during high speed runs. The rough engine operation was accompanied by surging of the small slot fuel pressure and this surging was always present at high fuel flow rates but decreased in severity with increasing altitude.

b. It was noticed that the small slot fuel pressure increased from less than 400 to 450 psi during all take-off runs and the RPM increased approximately 100 RPM. After take-off, the small slot fuel pressure and RPM stabilized at the same values observed prior to brake release for take-off.

19. The engine was started on both the main and the emergency fuel systems. Normal starts were obtained on the main fuel system. A very slow start was

obtained on the emergency fuel system. The time required for the fuel to ignite after the throttle had been advanced was approximately the same on both fuel systems. After ignition of the fuel the engine accelerated to idle RPM much slower on the emergency fuel system than it did on the main fuel system.

20. Ground switchovers were made from maximum stabilized engine speed (main system).

a. The following observations were made during the switchovers from "main" to "emergency":

(1) The time required for the RPM to stabilize was approximately eight seconds longer than the technical order specifies for the standard fuel system.

(2) The maximum stabilized emergency engine speed was approximately 70 RPM below the normal emergency operating range.

(3) When the switchover was made the initial RPM drop-off was very rapid and decreased in rapidity until the RPM stabilized. The RPM did not fall below the maximum stabilized emergency RPM at anytime.

b. The EC-2 regulator was not replaced or adjusted because:

(1) There did not appear to be a malfunction during the switchover since the RPM did not go below the stabilized RPM.

(2) It was known that the engine might over speed at altitude on the emergency fuel system and every effort was made to avoid this condition.

21. A second series of flights were made with the VS-2 and EC-2 readjusted to check the data recorded during the first series of flights. During this series of flights, a temperature inversion was encountered between 30,000 and 40,000 feet. The data checks very well through 30,000 feet but at 40,000 feet and above the maximum emergency RPM and the acceleration time was greater than on previous flights. It is believed that these differences can be explained by the temperature inversion. The maximum emergency RPM and acceleration time is set according to ambient temperature and is greater on a hot day. The stabilization time on a switch over from "main" to "emergency" was observed to be about four seconds less than on the previous ground runs.

22. The pilot reported he had gained confidence in the selector valve because the engine did not over-speed on the emergency fuel system, and there was no tendency to over-temperature of flame out on a switch over,

either from "main" to "emergency" or from "emergency" to "main". (These switch overs were accomplished within the limits stated in paragraph 14b). If Figure 7 is compared with Figure 9 it can be seen that atmospheric conditions can cause considerable change in the maximum emergency RPM. If consideration is also given to production variations in the compensating bellows of the EC-2 and variations in adjustments of the EC-2 used on various engine-control combinations, it can be seen that care must be exercised when the emergency fuel system is used. Because of this, a warning light should be provided to indicate engine operation on the emergency fuel system. Since the main fuel system requires very little caution, there does not appear to be any reason to have the main fuel system indicator light that was installed for test purposes.

23. The CDP dump valve can be removed when the selector valve is installed. The CDP dump valve was installed on the standard fuel system to provide a means of failing the main fuel system, in order to check emergency fuel system operation. The selector valve does not require the main system be failed for this purpose. The EC-2 solenoid was used on the standard system to prevent the emergency fuel system from over-riding the main fuel system. When the selector valve is used this over-ride condition cannot occur, thus the EC-2 solenoid is unnecessary.

CONCLUSIONS

24. It is concluded that:

a. The Emergency Fuel Selector Valve had no adverse effect on engine operation.

b. The Emergency Fuel Selector Valve should be wired to the aircraft primary bus.

c. A light should be used to indicate the emergency fuel system is in use.

d. The pilot should be very careful when switching from "main" to "emergency" and during operation of the emergency fuel system.

e. The EC-2 Solenoid should not be used and CDP Dump Valve should be removed when the selector valve is installed.

f. The selector valve is not as safe during take-off as the standard fuel system because the emergency fuel system cannot take over automatically in case of a main system failure but must be manually selected by the pilot.

RECOMMEDNATIONS

25. It is recommended to the Power Plant Laboratory that:

a. If the Emergency Fuel Selector Valve is used, that it be wired to the aircraft primary bus.

b. An emergency system light be used in conjunction with the emergency fuel selector valve.

c. Existing Technical Orders concerning the precautions required when using the emergency fuel system be emphasized.

APPENDIX A

OPERATION OF THE STANDARD FUEL SYSTEM

1. This appendix is devoted to a discussion of the standard fuel system (without Emergency Fuel Selector Valve) and its advantages and disadvantages. When the standard selector switch is in the "on" (standby) position, the main fuel system schedules the engines fuel during steady state operation because the restrictor valve in the emergency fuel system reduces the emergency fuel pressure below the main fuel pressure. The principle virtue of this fuel system is the emergency system will take-over immediately when the main system fails. However, when operating in this condition during a throttle advance the emergency fuel pressure will rise as fast as the throttle is advanced while the main fuel system is compensated to avoid stall and does not necessarily rise as fast as the emergency fuel pressure. It may be seen that during a throttle advance the emergency fuel system may over-ride the main fuel system. The chief disadvantage of the standard fuel system is that the emergency fuel system can over-ride the main fuel system without the pilot being aware of the condition. Figure 5A shows schematically the main and emergency system elbows of the standard fuel system. Figure 4 shows the standard fuel system if the emergency fuel selector valve wiring is disregarded.

2. If the standard selector switch is placed in the "off" position only the main system is scheduling fuel to the engine since power is applied to the by-pass solenoid in the EC-2 and all fuel is by-passed freely. However, if the electrical system fails the emergency fuel system immediately goes to stand-by operation.

3. Placing the standard selector switch in the test position applies power to the CDP Dump Valve and fails the main fuel system. The emergency fuel system takes over in this condition.

EMERGENCY FUEL SELECTOR VALVE TEST
EF-86F 52-4598 TEST GROUP I 18-30 NOV 54
Data Corrected For Instrument Error Only

Run Number	1	2	3	4	1	2	1	2	1	2	1	1
Altitude	Gd	Gd	Gd	Gd	10M	10M	20M	20M	30M	30M	40M	42M
Max. RPM (Main)	7920	7920	7920	7920								
Stabilization Time (Sec.) (Main To Emergency)	11.0	11.2	11.0	12.0	15.0		20.0		21.0		15.0	15.0
Max. RPM (Emergency)	7360	7310	7360	7310								
Advance Max RPM (Emergency)	7360	7360	7360	7360								
Stabilization Time (Sec.)	4.0	3.0	2.5	3.0	9.0		8.0		0		10.0	11.0
Max. RPM (Main)	7920	7920	7920	7920								
Acceleration Time (Sec.)	12.9				10.3	9.0	14.0	12.0	13.5	14.0	12.0	13.0
Flight Idle at 180 K	3400				3500		3700		4900		5600	5750
RPM at Max. IAS (Main)					7920		7940		7840		7820	7820
Max. IAS (Main)					485		410		331		277	271
RPM at Max. IAS (Emergency)					7620		7510		7510		7405	7405
Max. IAS (Emergency)					466		396		326		271	268
RPM Drop-Off on Main System Failure							300		400		300	300
Acceleration Rate - Rev per sec.^{2}	5.85				7.41		5.44		4.77		3.85	2.66

TABLE 1

EMERGENCY FUEL SELECTOR VALVE TEST
RF-86F 52-4598 TEST GROUP II 7 DEC 54
Data Corrected For Instrument Error Only

Run Number	1	2	3	4	1	2	3	1	2	3	1	2	3	1	2	3	1	2	3
Altitude	Gd	Gd	Gd	Gd	10M			20M			30M			40M			45M		
Max. RPM (Main)	8075	7970	7970	7970															
Stabilization Time (Sec.) (Main to Emergency)	7.0	6.5	6.4	5.9	4.0			12.0			19.0			12.0			0		
Max. RPM (Emergency)	7410	7410	7410	7510															
Advance Max. RPM (Emergency)	7430	7430	7430	7480															
Stabilization Time (Sec.)	1.9	1.8	1.3	1.5	2.5			0.8			0			6.0			0		
Max. RPM (Main)	7970	7950	7950	7950															
Acceleration Time (Sec.)	11.0	11.2	11.1	[illegible]	11.0	11.6	11.6	14.1	14.2	14.2	14.5	14.2	14.4	15.2	15.2	15.1	16.0	16.2	16.2
Flight Idle at 180 K	3200				3250			3400			4700			5700			6000		
RPM at Max. IAS (Main)					8020			8000			7960			7870			7870		
Max. IAS (Main)					495	[illegible]	[illegible]	422			348			271			259		
RPM at Max. IAS (Emergency)					7770			7800			7670			7870			7870		
Max. IAS (Emergency					490			414			342			271			259		
RPM Drop-Off on Main System Failure					350			300			400			500			400		
Acceleration Rate - Rev. per sec^2				7.16			6.90			5.29			3.79			2.52			1.93
Idle RPM at 180 K (Emergency)	3150				3140			3190			4610			5600			6000		
Stabilization Time - (Sec.) (Main to Emergency)					6.9			10.1			11.0			13.0			15.0		
Stabilization (Sec.) (Emergency to Main at 6500 RPM)					2.2			3.1			3.2			7.0			8.2		
Stabilized Exhaust Gas Temperature (Max. RPM on Main)*	650	650	655	[illegible]	650			670			658			635			625		
Small Slot Fuel Pressure - psi (Main)*	395	400	400		400			295			205			130			110		
Free Air Temperature - °C	-1	-1	-1		-4	-3	-2	-23	-23	-23	-39	-39	-39	-26	-26	-26	-30	-30	-30

* Not Corrected For Instrument Error

TABLE 2

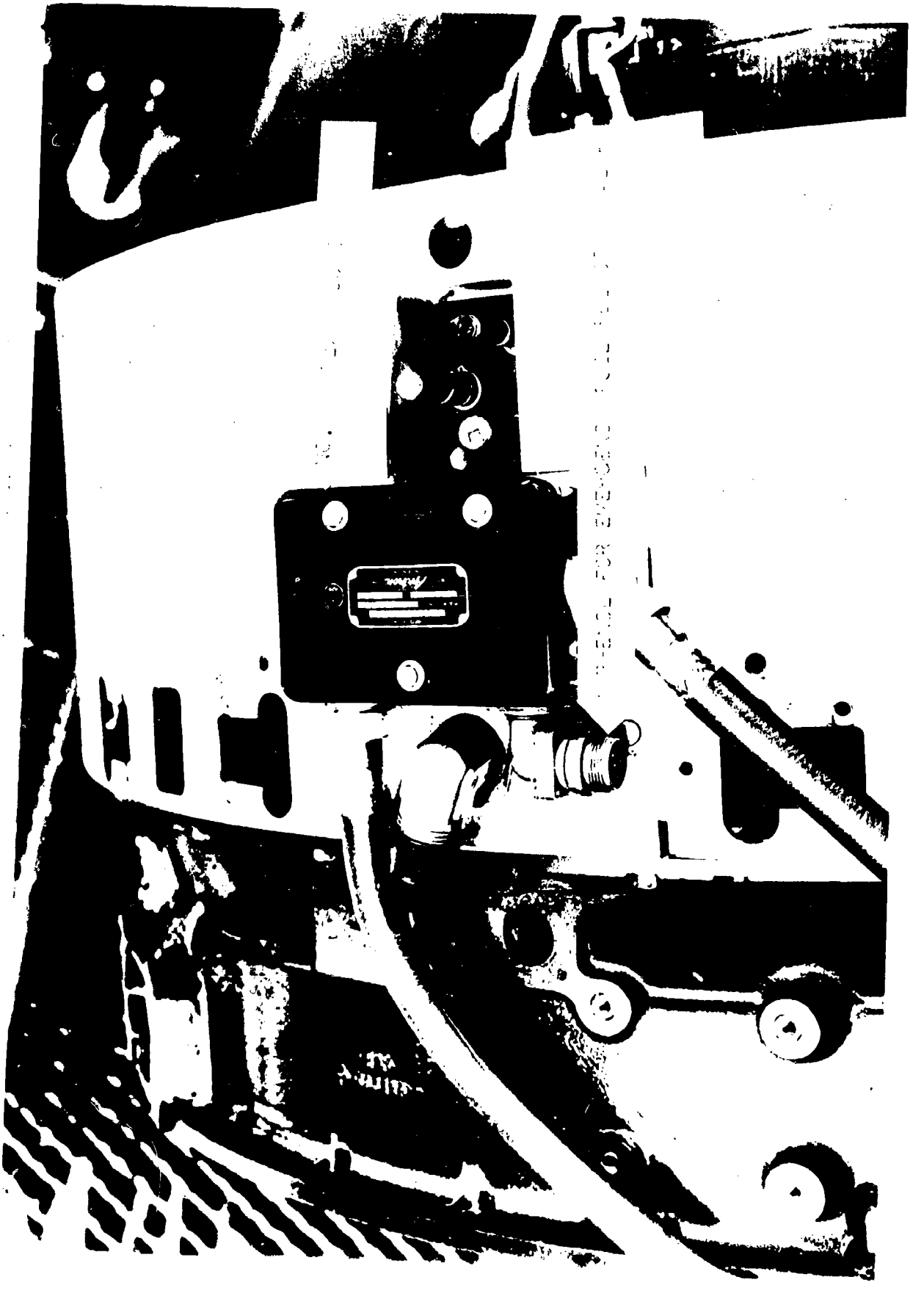

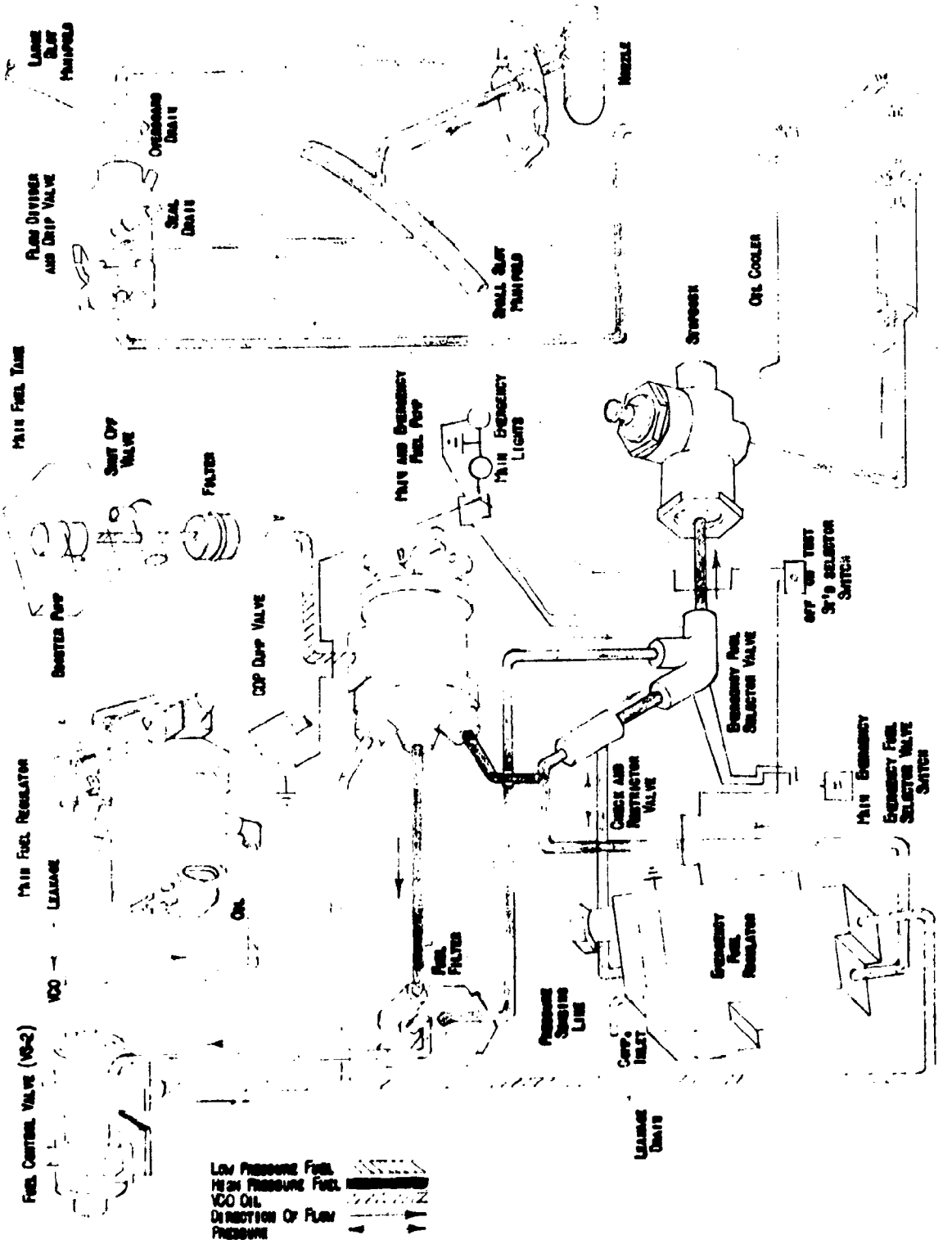

Schematic of Fuel System

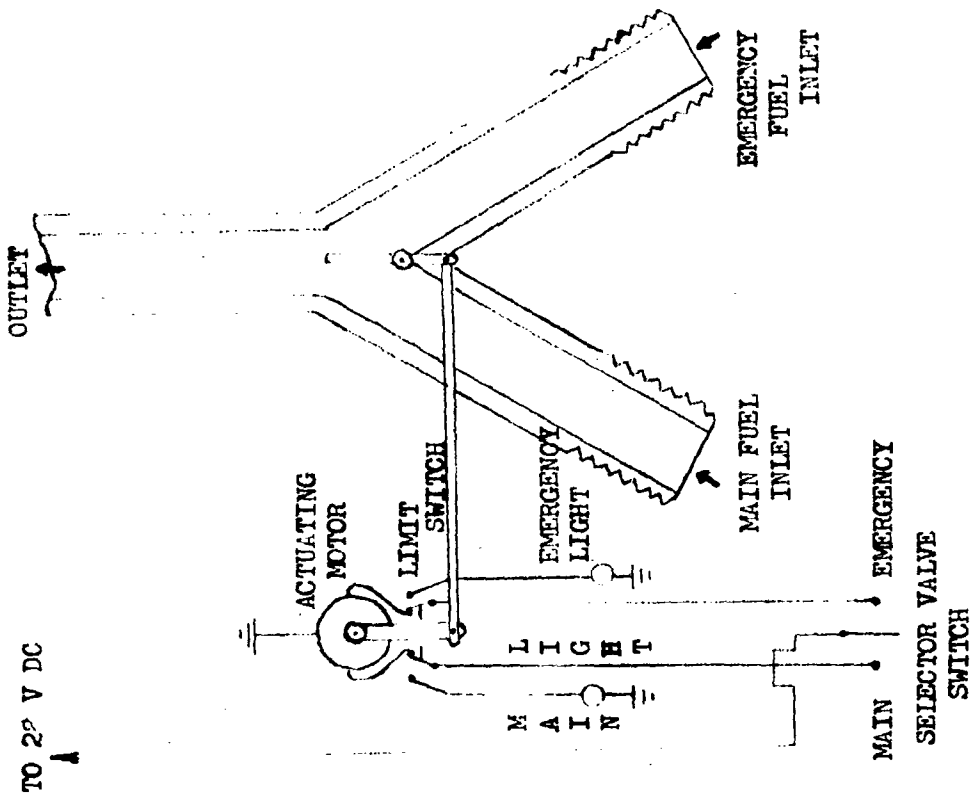

B. EMERGENCY FUEL SELECTOR VALVE ELBOW

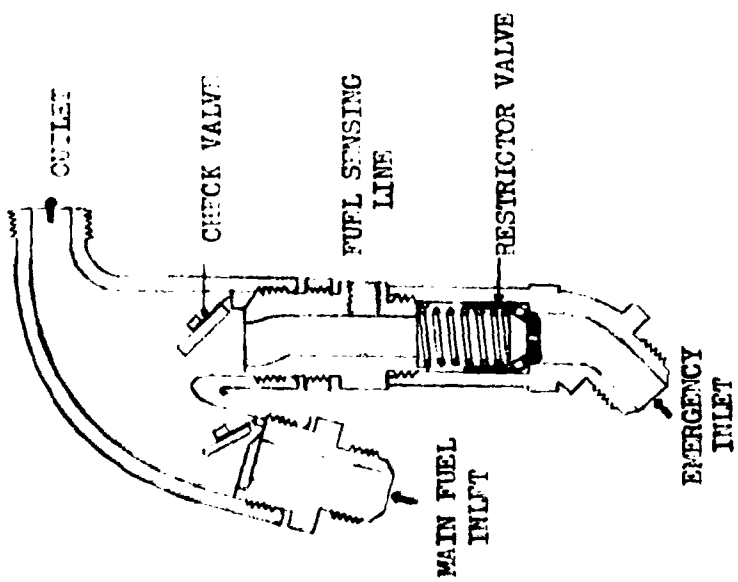

A. STANDARD SYSTEM ELBOW

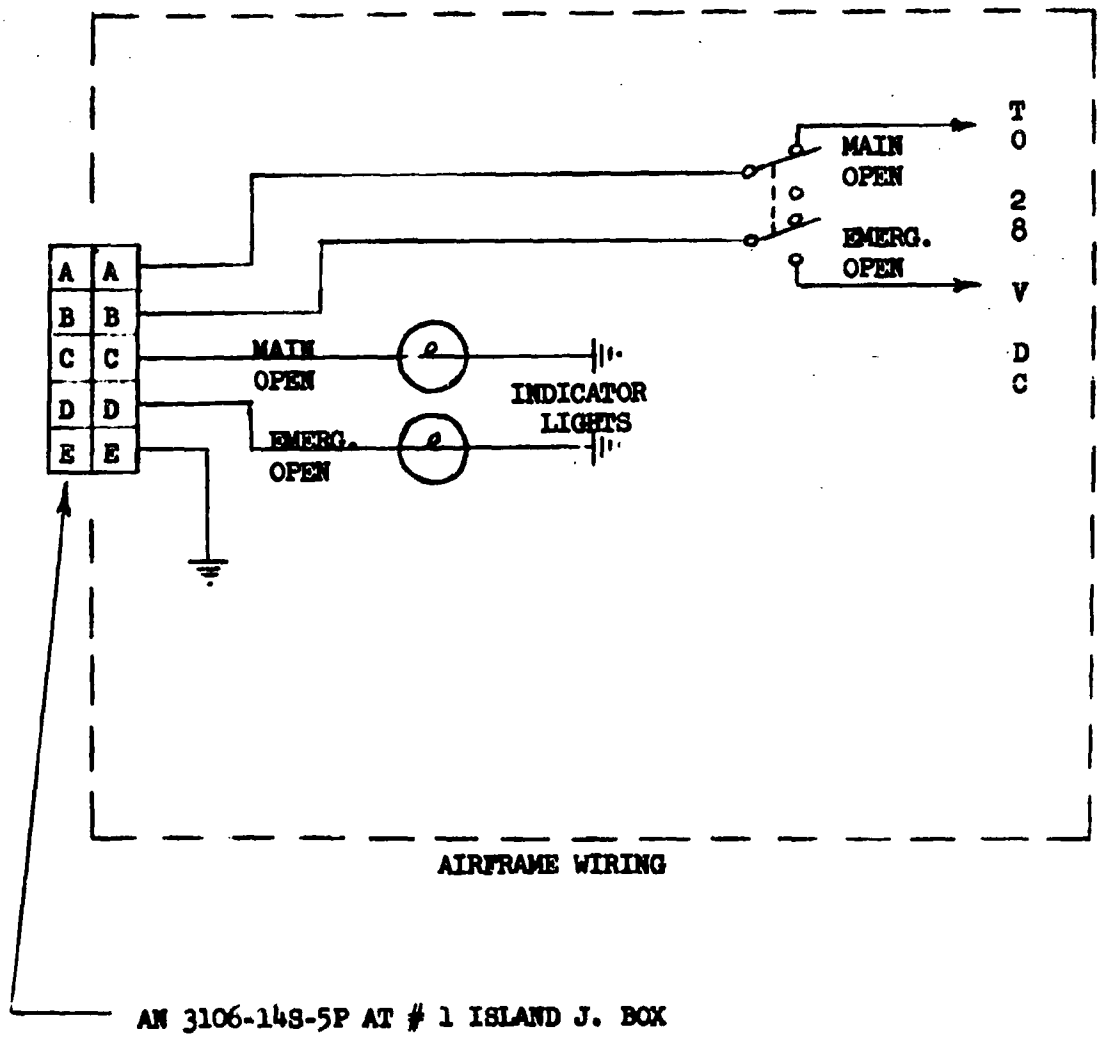

Schematic of the Additional Airframe Wiring for Emergency Fuel Selector Valve

FIGURE 7

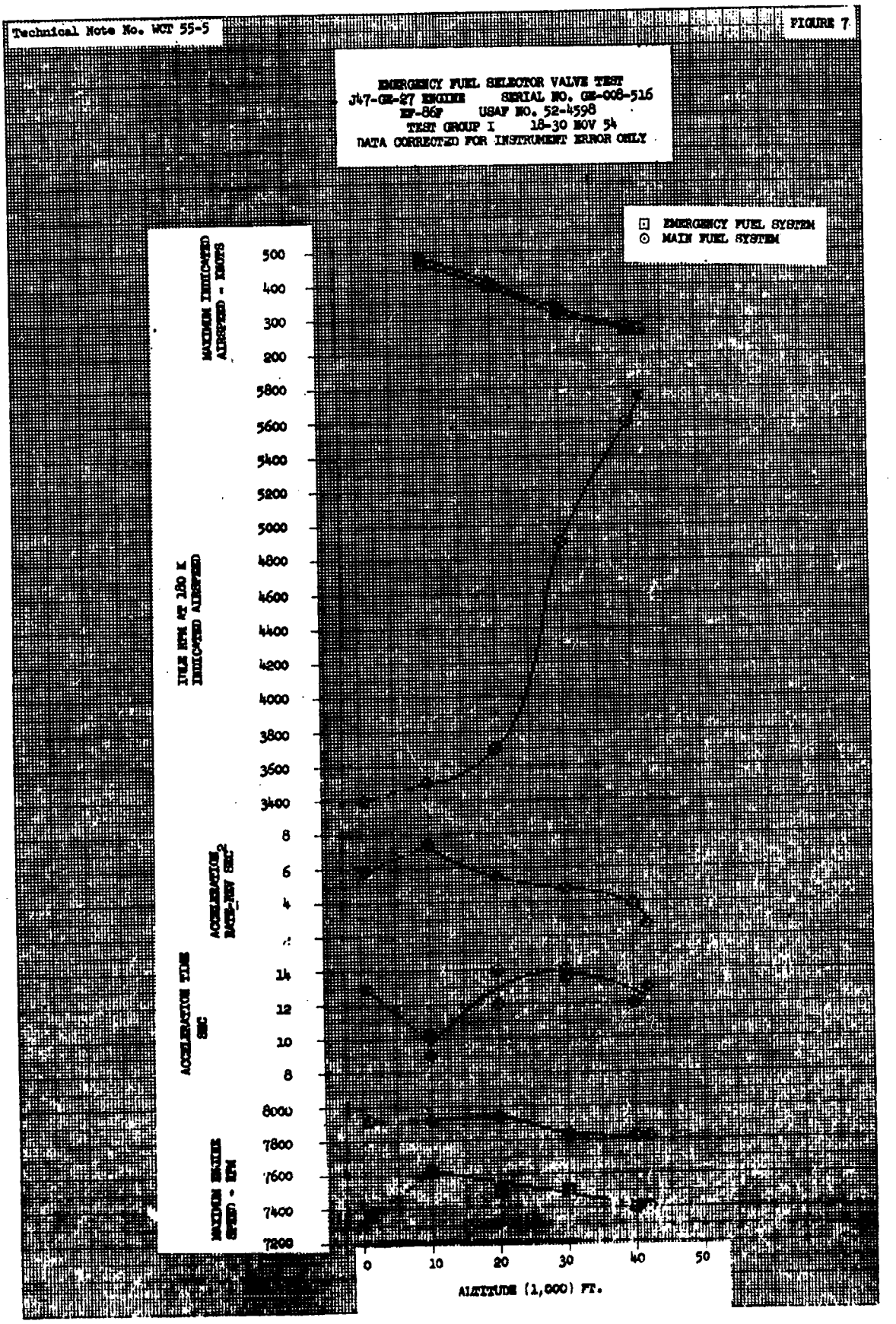
EMERGENCY FUEL SELECTOR VALVE TEST
J47-GE-27 ENGINE SERIAL NO. GE-008-516
RF-86F USAF NO. 52-4598
TEST GROUP I 18-30 NOV 54
DATA CORRECTED FOR INSTRUMENT ERROR ONLY
EMERGENCY FUEL SYSTEM
MAIN FUEL SYSTEM
MAXIMUM INDICATED AIRSPEED - KNOTS
IDLE RPM AT 180 K INDICATED AIRSPEED
ACCELERATION - MACH-MIN SEC²
ACCELERATION TIME SEC
MAXIMUM ENGINE SPEED - RPM
500
400
300
200
5800
5600
5400
5200
5000
4800
4600
4400
4200
4000
3800
3600
3400
8
6
4
14
12
10
8
8000
7800
7600
7400
7200
0
10
20
30
40
50
ALTITUDE (1,000) FT.

FIGURE 8

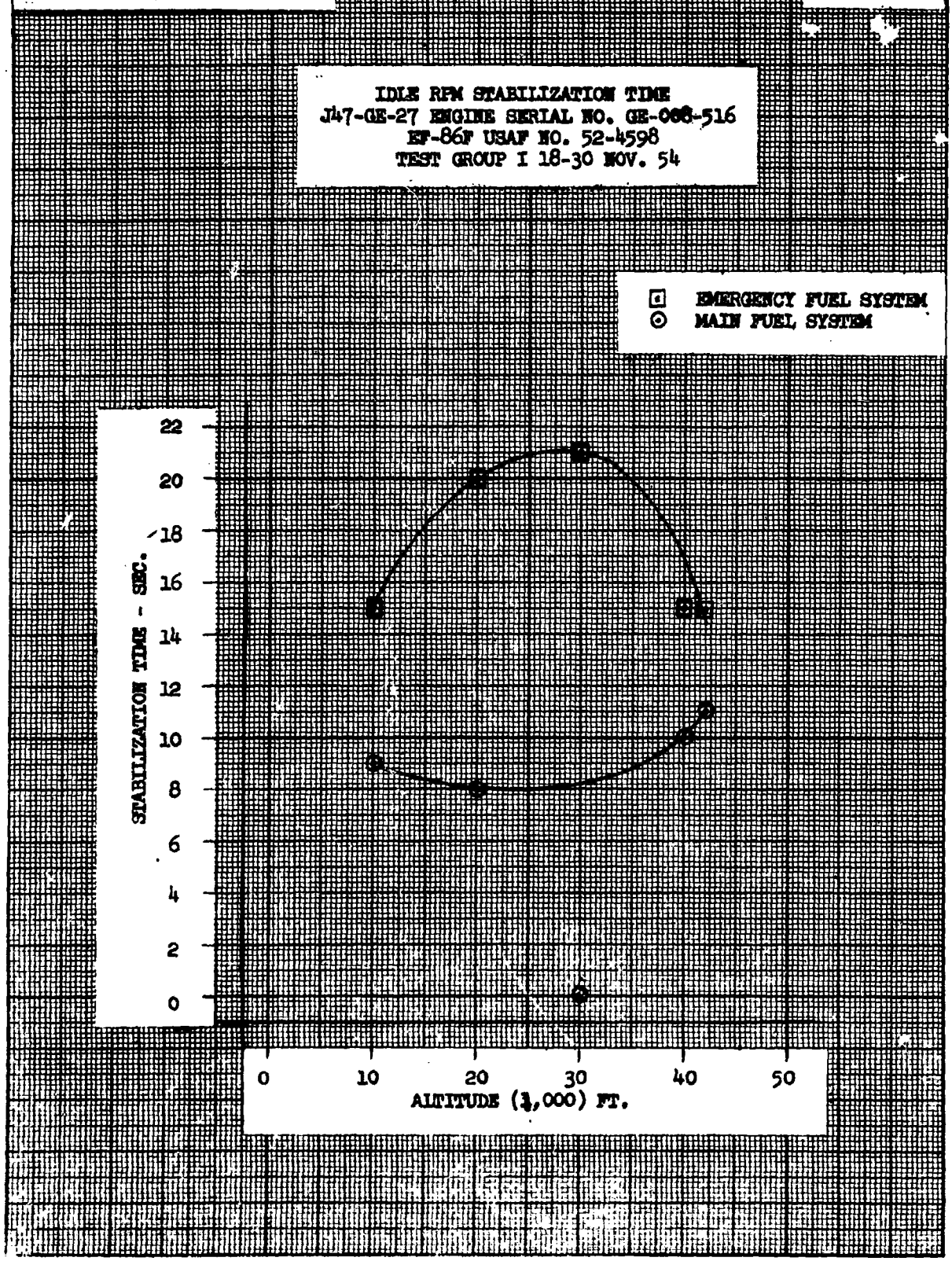
IDLE RPM STABILIZATION TIME
J47-GE-27 ENGINE SERIAL NO. GE-068-516
EF-86F USAF NO. 52-4598
TEST GROUP I 18-30 NOV. 54
EMERGENCY FUEL SYSTEM
MAIN FUEL SYSTEM
STABILIZATION TIME - SEC.
22
20
18
16
14
12
10
8
6
4
2
0
0
10
20
30
40
50
ALTITUDE (1,000) FT.

FIGURE 9

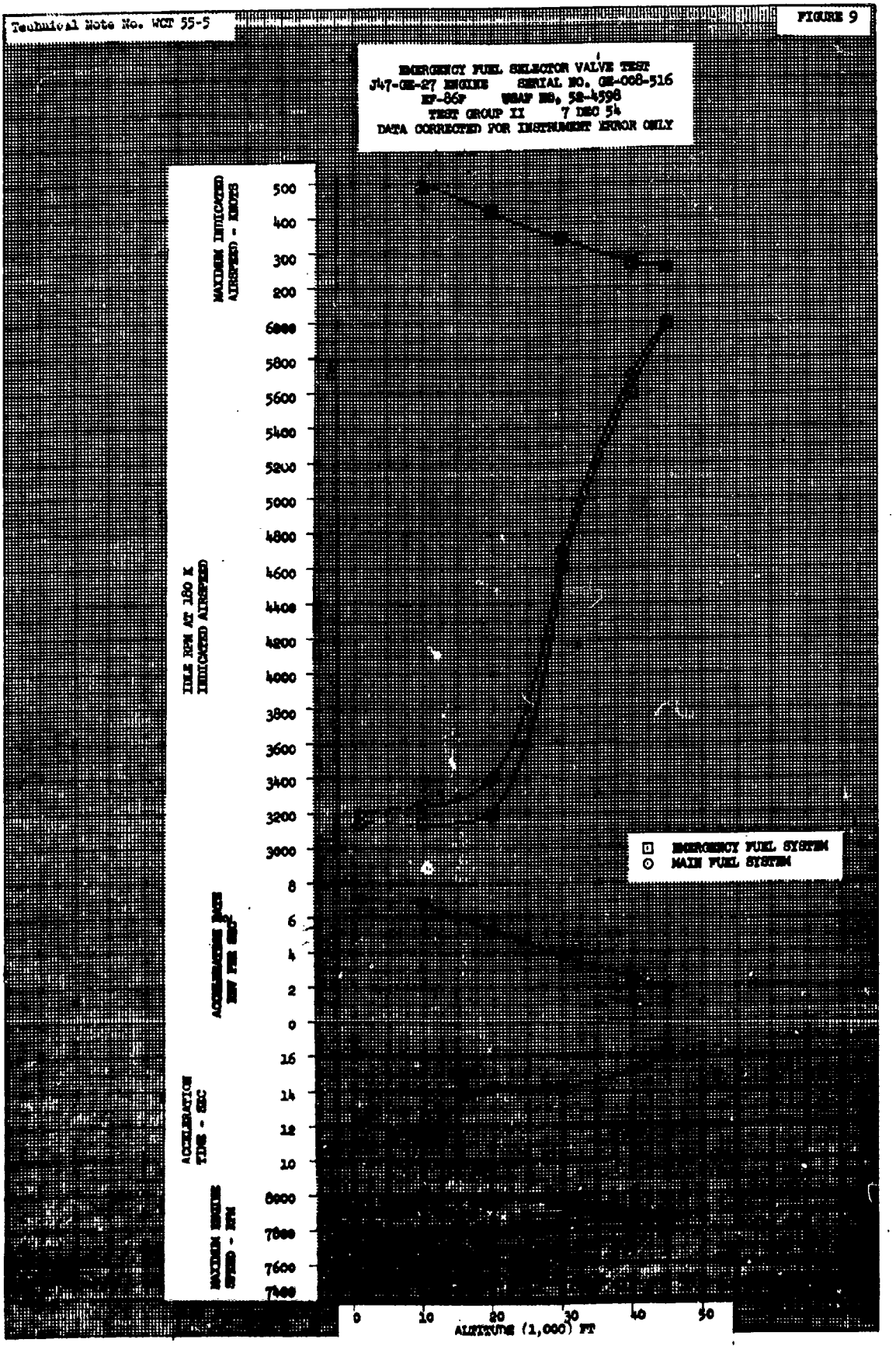
EMERGENCY FUEL SELECTOR VALVE TEST
J47-GE-27 ENGINE SERIAL NO. GE-008-516
RF-86F USAF NO. 52-4598
TEST GROUP II 7 DEC 54
DATA CORRECTED FOR INSTRUMENT ERROR ONLY
MAXIMUM INDICATED AIRSPEED - KNOTS
500
400
300
200
IDLE RPM AT 180 K INDICATED AIRSPEED
6000
5800
5600
5400
5200
5000
4800
4600
4400
4200
4000
3800
3600
3400
3200
3000
ACCELERATION INDEX IN PER SEC²
8
6
4
2
0
ACCELERATION TIME - SEC
16
14
12
10
MAXIMUM ENGINE SPEED - RPM
8000
7800
7600
7400
0
10
20
30
40
50
ALTITUDE (1,000) FT
EMERGENCY FUEL SYSTEM
MAIN FUEL SYSTEM

FIGURE 10

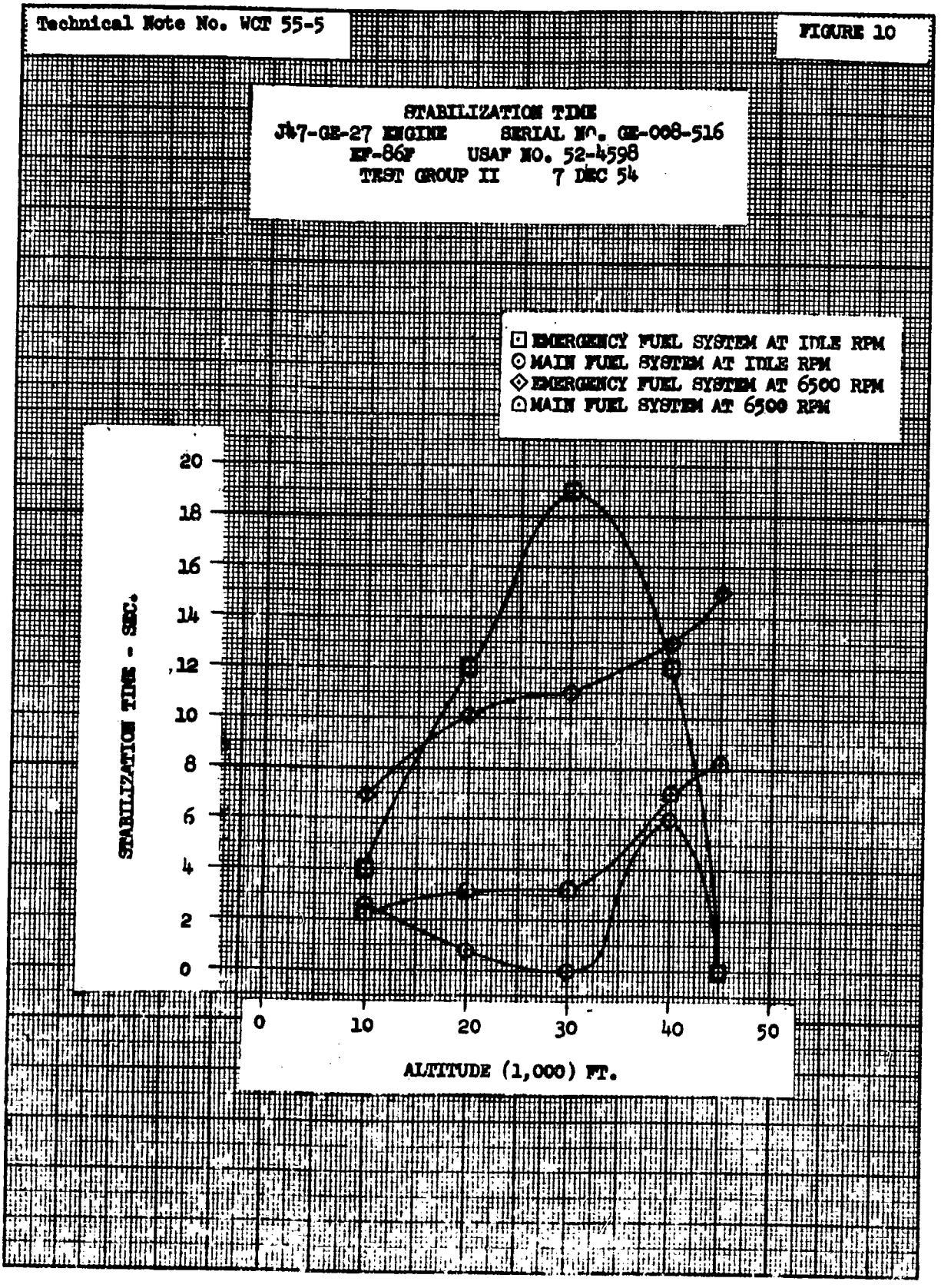
STABILIZATION TIME
J47-GE-27 ENGINE SERIAL NO. GE-008-516
RF-86F USAF NO. 52-4598
TEST GROUP II 7 DEC 54
EMERGENCY FUEL SYSTEM AT IDLE RPM
MAIN FUEL SYSTEM AT IDLE RPM
EMERGENCY FUEL SYSTEM AT 6500 RPM
MAIN FUEL SYSTEM AT 6500 RPM
STABILIZATION TIME - SEC.
20
18
16
14
12
10
8
6
4
2
0
0
10
20
30
40
50
ALTITUDE (1,000) FT.

AD 56013

Armed Services Technical Information Agency

Reproduced by
DOCUMENT SERVICE CENTER
KNOTT BUILDING, DAYTON, 2, OHIO

NOTICE: WHEN GOVERNMENT OR OTHER DRAWINGS, SPECIFICATIONS OR OTHER DATA ARE USED FOR ANY PURPOSE OTHER THAN IN CONNECTION WITH A DEFINITELY RELATED GOVERNMENT PROCUREMENT OPERATION, THE U. S. GOVERNMENT THEREBY INCURS NO RESPONSIBILITY, NOR ANY OBLIGATION WHATSOEVER; AND THE FACT THAT THE GOVERNMENT MAY HAVE FORMULATED, FURNISHED, OR IN ANY WAY SUPPLIED THE SAID DRAWINGS, SPECIFICATIONS, OR OTHER DATA IS NOT TO BE REGARDED BY IMPLICATION OR OTHERWISE AS IN ANY MANNER LICENSING THE HOLDER OR ANY OTHER PERSON OR CORPORATION, OR CONVEYING ANY RIGHTS OR PERMISSION TO MANUFACTURE, USE OR SELL ANY PATENTED INVENTION THAT MAY IN ANY WAY BE RELATED THERETO.

DEPARTMENT OF THE AIR FORCE
HEADQUARTERS AIR FORCE MATERIEL COMMAND
WRIGHT-PATTERSON AIR FORCE BASE OHIO

FEB 19 2002

MEMORANDUM FOR DTIC/OCQ (ZENA ROGERS)
8725 JOHN J. KINGMAN ROAD, SUITE 0944
FORT BELVOIR VA 22060-6218

FROM: AFMC CSO/SCOC
4225 Logistics Avenue, Room S132
Wright-Patterson AFB OH 45433-5714

SUBJECT: Technical Reports Cleared for Public Release

References: (a) HQ AFMC/PAX Memo, 26 Nov 01, Security and Policy Review, AFMC 01-242 (Atch 1)

(b) HQ AFMC/PAX Memo, 19 Dec 01, Security and Policy Review, AFMC 01-275 (Atch 2)

(c) HQ AFMC/PAX Memo, 17 Jan 02, Security and Policy Review, AFMC 02-005 (Atch 3)

1. Technical reports submitted in the attached references listed above are cleared for public release in accordance with AFI 35-101, 26 Jul 01, *Public Affairs Policies and Procedures*, Chapter 15 (Cases AFMC 01-242, AFMC 01-275, & AFMC 02-005).

2. Please direct further questions to Lezora U. Nobles, AFMC CSO/SCOC, DSN 787-8583.

Lezora U. Nobles

LEZORA U. NOBLES
AFMC STINFO Assistant
Directorate of Communications and Information

Attachments:
1. HQ AFMC/PAX Memo, 26 Nov 01
2. HQ AFMC/PAX Memo, 19 Dec 01
3. HQ AFMC/PAX Memo, 17 Jan 02

cc:
HQ AFMC/HO (Dr. William Elliott)

DEPARTMENT OF THE AIR FORCE

HEADQUARTERS AIR FORCE MATERIEL COMMAND
WRIGHT-PATTERSON AIR FORCE BASE OHIO

DEC 19 2001

MEMORANDUM FOR HQ AFMC/HO

FROM: HQ AFMC/PAX

SUBJECT: Security and Policy Review, AFMC 01-275

1. The reports listed in your attached letter were submitted for security and policy review IAW AFI 35-101, Chapter 15. They have been cleared for public release.

2. If you have any questions, please call me at 77828. Thanks.

JAMES A. MORROW
Security and Policy Review
Office of Public Affairs

Attachment:
Your Ltr 18 November 2001

18 December 2001

MEMORANDUM FOR: HQ AFMC/PAX
Attn: Jim Morrow

FROM: HQ AFMC/HO

SUBJECT: Releasability Reviews

1. Please conduct public releasability reviews for the following attached Defense Technical Information Center (DTIC) reports:

   a. *Emergency Fuel Selector Valve Test on the J47-GE-27 Engine as Installed on F-86F Aircraft*, January 1955; DTIC No. AD- 056 013.

   b. *Phase II Performance and Serviceability Tests of the F-86F Airplane USAF No. 51-13506 with Pre-Turbine Modifications*, June 1954; DTIC No. AD- 037 710.

   c. *J-47 Jet Engine Compressor Failures*, 7 April 1952; DTIC No. AD- 039 818.

   d. *Evaluation of Aircraft Armament Installation (F-86F with 206 RK Guns) Project Gun-Val*, February 1955; DTIC No. AD- 056 763.

   e. *A Study of Serviced-Imposed Maneuvers of Four Jet Fighter Airplanes in Relation to Their Handling Qualities and Calculated Dynamic Characteristics*, 15 August 1955; DTIC No. AD- 068 899.

   f. *Fuel Booster Pump*, 6 February 1953; DTIC No. AD- 007 226.

   g. *Flight Investigation of Stability Fix for F-86F Aircraft*, 8 September 1953; DTIC No. AD- 032 259.

   h. *Investigation of Engine Operational Deficiencies in the F-86F Airplane*, June 1953; DTIC No. AD- 015 749.

   i. *Operational Suitability Test of the T-160 20mm Gun Installation in F-86F-2 Aircraft*, 29 April 1954; DTIC No. AD- 031 528.

   j. *Engineering Evaluation of Type T 160 Gun and Installation in F 86 Aircraft*, September 1953; DTIC No. AD- 019 809.

AFMC 01-275

k. *Airplane and Engine Responses to Abrupt Throttle Steps as Determined from Flight Tests of Eight Jet-Propelled Airplanes*, September 1959; DTIC No. AD-225 780.

l. *Improved F-86F: Combat Developed*, 28 January 1953; DTIC No. AD- 003 153.

m. *Flight Test Progress Report No. 19 for Week Ending February 27, 1953 for Model F-86F Airplane NAA Model No. NA-191*, 5 March 1953; DTIC No. AD-006 806.

2. These attachments have been requested by Dr. Kenneth P. Werrell, a private researcher.

3. The AFMC/HO point of contact for these reviews is Dr. William Elliott, who may be reached at extension 77476.

JOHN D. WEBER
Command Historian

13 Attachments:
a. DTIC No. AD- 056 013
b. DTIC No. AD- 037 710
c. DTIC No. AD- 039 818
d. DTIC No. AD- 056 763
e. DTIC No. AD- 068 899
f. DTIC No. AD- 007 226
g. DTIC No. AD- 032 259
h. DTIC No. AD- 015 749
i. DTIC No. AD- 031 528
j. DTIC No. AD- 019 809
k. DTIC No. AD- 225 780
l. DTIC No. AD- 003 153
m. DTIC No. AD- 006 806