UNCLASSIFIED

AD NUMBER
AD091920
CLASSIFICATION CHANGES
TO: unclassified
FROM: confidential
LIMITATION CHANGES
TO: Approved for public release, distribution unlimited
FROM: Distribution authorized to DoD only; Foreign Government Information; SEP 1955. Other requests shall be referred to British Embassy, 3100 Massachusetts Avenue, NW, Washington, DC 20008.
AUTHORITY
DSTL, AVIA 6/19057, 30 Jul 2008; DSTL, AVIA 6/19057, 30 Jul 2008

THIS PAGE IS UNCLASSIFIED

CONFIDENTIAL

AD 91920

Armed Services Technical Information Agency

Reproduced by

DOCUMENT SERVICE CENTER

KNOTT BUILDING, DAYTON, 2, OHIO

This document is the property of the United States Government. It is furnished for the duration of the contract and shall be returned when no longer required, or upon recall by ASTIA to the following address: Armed Services Technical Information Agency, Document Service Center, Knott Building, Dayton 2, Ohio.

NOTICE: WHEN GOVERNMENT OR OTHER DRAWINGS, SPECIFICATIONS OR OTHER DATA ARE USED FOR ANY PURPOSE OTHER THAN IN CONNECTION WITH A DEFINITELY RELATED GOVERNMENT PROCUREMENT OPERATION, THE U. S. GOVERNMENT THEREBY INCURS NO RESPONSIBILITY, NOR ANY OBLIGATION WHATSOEVER; AND THE FACT THAT THE GOVERNMENT MAY HAVE FORMULATED, FURNISHED, OR IN ANY WAY SUPPLIED THE SAID DRAWINGS, SPECIFICATIONS, OR OTHER DATA IS NOT TO BE REGARDED BY IMPLICATION OR OTHERWISE AS IN ANY MANNER LICENSING THE HOLDER OR ANY OTHER PERSON OR CORPORATION, OR CONVEYING ANY RIGHTS OR PERMISSION TO MANUFACTURE, USE OR SELL ANY PATENTED INVENTION THAT MAY IN ANY WAY BE RELATED THERETO.

CONFIDENTIAL

NOTICE: THIS DOCUMENT CONTAINS INFORMATION AFFECTING THE NATIONAL DEFENSE OF THE UNITED STATES WITHIN THE MEANING OF THE ESPIONAGE LAWS, TITLE 18, U.S.C., SECTIONS 793 and 794. THE TRANSMISSION OR THE REVELATION OF ITS CONTENTS IN ANY MANNER TO AN UNAUTHORIZED PERSON IS PROHIBITED BY LAW

AD No. 91920
ASTIA FILE COPY

TECH. NOTE
I.A.P.1046

TECH. NOTE
I.A.P.1046

CONFIDENTIAL - DISCREET

ROYAL AIRCRAFT ESTABLISHMENT

FARNBOROUGH, HANTS

TECHNICAL NOTE No: I.A.P.1046

FC

THE CANADIAN POSITION AND HOMING INDICATOR, Mk.2

(A.S.C.C. PROJECT 173)

by

R.L.JEFFERIES

SEPTEMBER, 1955

1. THIS INFORMATION IS DISCLOSED FOR OFFICIAL USE BY THE RECIPIENT GOVERNMENT, DISCLOSURE TO ANY OTHER GOVERNMENT OR RELEASE TO THE PRESS OR IN ANY OTHER WAY WOULD BE A BREACH OF THIS CONDITION.

2. THE INFORMATION SHOULD BE SAFEGUARDED UNDER RULES DESIGNED TO GIVE THE SAME STANDARD OF SECURITY AS THAT MAINTAINED BY HER MAJESTY'S GOVERNMENT IN THE UNITED KINGDOM

3. THE INFORMATION CONTAINED IN THIS DOCUMENT SHOULD NOT BE CIRCULATED OUTSIDE GOVERNMENT DEPARTMENTS WITHOUT THE PRIOR PERMISSION OF THE [illegible]

[illegible] THAT INFORMATION [illegible] BE SUBJECT TO [illegible]

MINISTRY OF SUPPLY

THIS DOCUMENT IS THE PROPERTY OF H.M. GOVERNMENT AND ATTENTION IS CALLED TO THE PENALTIES ATTACHING TO ANY INFRINGEMENT OF THE OFFICIAL SECRETS ACT, 1911-1939

It is intended for the use of the recipient only, and for communication to such officers under him as may require to be acquainted with its contents in the course of their duties. The officers exercising this power of communication are responsible that such information is imparted with due caution and reserve. Any person other than the authorised holder, upon obtaining possession of this document, by finding or otherwise, should forward it, together with his name and address, in a closed envelope to:-

THE SECRETARY, MINISTRY OF SUPPLY, LONDON, W.C.2

Letter postage need not be prepaid, other postage will be refunded. All persons are hereby warned that the unauthorised retention or destruction of this document is an offence against the Official Secrets Act

ENCLOSURE 2³ TO Astia 26-36
AIR ATTACHE, LONDON
MAY 2 1956

CONFIDENTI[redacted]

56AA 1937

Corrigenda to Technical Note No. I.A.P.1046

November, 1955

ROYAL AIRCRAFT ESTABLISHMENT, FARNBOROUGH

The Canadian Position and Homing Indicator Mk.2
(A.S.C.C. Project No.173)

R.A.E. Ref: IAP/1188K

Correction to:-

Front page of cover. Page 1. Detachable Abstract Cards (Titles) and page 4 Line 6, for 'A.S.C.C. Project No.173' read "A.S.C.C. Project No.145."

Distribution

M.O.S.(Air) Headquarters

Deputy Controller of Aircraft (DCA)
DGTD(A)
PDQRD(A)
ADSR (Records)
DA Nav.
ADRD Inst A
ADRD Inst B
RD Inst Nav. (Action Copy)
TPA3/TIB
SAE MOS Assistant for Standardisation (Air)

I.A.P. Department

Head of Department
Head of Inst. Div(s)
Head of Flight Insts. Section
Author
TPI Section
File

M.O.S.(Air) Establishments

30 AAEE

25 R.A.E.

Director
DDRAE(E)
Pats.1
Library

U.D.C. No. 629.13.053

Technical Note No. I.A.P.1046
September, 1955

ROYAL AIRCRAFT ESTABLISHMENT, FARNBOROUGH

The Canadian Position and Homing Indicator Mk.2 (A.S.C.C. Project 173)

by

R. L. Jefferies

R.A.E. Ref: IAP/1183K

SUMMARY

The Position and Homing Indicator Mk.2 is an electro-mechanical computer combining air mileage, heading and set wind information into position indication relative to selected bases. This note briefly describes the instrument and gives results of initial laboratory tests.

The model examined had an overall homing accuracy of about 8 nautical miles. Owing to extensive use of miniature components, further tests will be needed before the instrument is considered for Service use or Standardisation.

LIST OF CONTENTS

		Page
1	Introduction	4
2	General Description	4
2.1	Principle of operation	4
2.2	Presentation	4
3	Detailed Description	4
3.1	Heading	4
3.2	Airspeed system	5
3.3	Convergency correction	5
3.4	Indicator servo transmission	5
3.5	Memory system	6
3.6	Control relay system	6
3.7	Component units	7
4	Operational Use	7
4.1	Before flight	7
4.2	During flight	8
5	Laboratory Tests	9
6	Conclusions	9
Advance Distribution		10
Detachable Abstract Cards		-

LIST OF TABLES

	Table
Leading Particulars	I
Compass System	II
Airspeed Follow-up System	III
Airspeed Variable Gear	IV
Wind Setting Potentiometer	V
Wind Integrator Potentiometer	VI
Indicator Follow-up System	VII

LIST OF ILLUSTRATIONS

	Figure
Component units	1
Indicator unit	2
Indicator unit	3
Control unit	4
Selector unit	5
Computer unit	6
Computer unit	7
Amplifier - junction box	8
Principle of operation	9
Heading system (schematic)	10
Airspeed system (schematic)	11
Convergency system (schematic)	12
Indicator transmission system (schematic)	13
Relay control system	14
Airspeed follow-up motor	15
Airspeed variable gear ball movement	16
Wind setting potentiometer	17
Wind integrator potentiometer	18
Indicator follow-up system	19

1 Introduction

The Mk.1 Position and Homing Indicator, (P.H.I.) made by Computing Devices of Canada, has been previously examined*. This note describes the Mk.2 instrument and gives an initial bench assessment of its inherent accuracy prior to flight trials, as agreed under A.S.C.C. Combined Test Project No.173, Working Party No.53.

2 General Description

2.1 Principle of operation

Presentation of the Mk.2 P.H.I. is similar to that of the Mk.1 instrument, providing a continuous plan view of the aircraft's position relative to a selected datum point. Fig.1 shows the cable coupling of the various units whilst Fig.9 gives in block diagram form the general linkage of component parts.

Airspeed as a synchro input from a Kollsman True Airspeed Transmitter is converted into a shaft rotation and applied to the ball resolver, which is set by a synchro input from the compass. The component air mileage outputs then set potentiometers to produce voltage pick-offs proportional to N-S and E-W distances, to which are added component wind voltages from manual wind settings. The ground miles component voltages thus obtained then drive integrator motors which move mutually perpendicular indicator arms across the instrument face.

2.2 Presentation

Fig.1 shows the face of the indicator, which is divided by seven concentric circles, the outermost being a compass rose. The aircraft's position is always at the centre of the dial, the target being denoted by the intersection of the marker arms which move in a map direction opposite to the aircraft's flight path. Range and bearing of the aircraft relative to any of five selected stations can then be seen, together with true heading indication from the compass pointer.

Three ranges of 50, 250 and 500 nautical miles are provided, the instrument automatically moving to the 500 range if either of the others is exceeded. A convergency correction is applied to reduce the flat earth presentation errors.

A hold control enables the presentation to be locked and incoming information stored in a memory system. This operates automatically when setting wind, the manual wind controls moving the marker arms to position the intersection at the range and bearing corresponding to wind speed and direction.

3 Detailed Description

3.1 Heading

The heading system is shown schematically in Fig.10. Synchronous transmission from a flux-gate type compass is fed through a differential synchro in the control unit to the stators of the course synchro in the computer unit and the heading synchro in the indicator. Misalignment signals are amplified in the course and heading amplifiers of the junction box and returned to the variable phases of the two phase follow-up motors

---

* The Canadian Position and Homing Indicator. - Technical Note No. I.A.P.1024.

in the indicator and computer, setting the heading pointer and the ball resolver respectively. Variation is applied at the differential synchro.

3.2 Airspeed system

The airspeed system is shown schematically in Fig.11. The airspeed synchro in the computer unit is fed by a synchro transmission from the Kollsman True Airspeed Transmitter, misalignment signals being applied to the two phase airspeed motor after amplification in the airspeed servo-amplifier of the junction box. The airspeed motor sets the ball carriage of a ball and disc variable gear, the disc being driven by a constant speed escapement controlled motor. The roller speed is therefore proportional to airspeed.

Output from the roller is geared to one side of a differential, the other side being geared to the airspeed follow-up motor and the ball resolver. If the roller and follow-up motor speeds differ, the differential alters the airspeed resistor in the follow-up motor supply. The follow-up motor therefore drives the ball resolver at a speed proportional to airspeed, and the sine and cosine outputs of the resolver drive twin helipots to give voltages proportional to N-S and E-W displacements.

A low airspeed cut-out switch guards against operation of the system by ground winds.

3.3 Convergency correction

The natural convergency of two meridians = d (long) sin (mid-lat.) and the method of applying this to the P.H.I. Mk.2 can be followed by referring to the schematic diagram of Fig.12.

A high accuracy two-phase resolver in the junction box is set manually to the mid-latitude of the proposed flight. The voltage proportional to sine latitude is coupled through a transformer to supply the convergency potentiometer of the E-W twin helipot. The pick-off from the potentiometer is therefore proportional to E-W mileage sine latitude.

The voltage proportional to cos latitude is transformed and applied to a potentiometer whose wiper is driven by the convergency motor, through the convergency servo-amplifier, to maintain a balance with the convergency potentiometer. Hence the motor movement is proportional to $\frac{\text{E-W mileage} \times \sin \text{lat.}}{\cos \text{lat.}}$ i.e. d. long sine mid-lat., and this is applied through a differential to the computer course synchro.

3.4 Indicator servo transmission

Fig.13 shows schematically the N-S drive to the indicator; the E-W is similar.

In the computer unit a transformer applies 26 V across the centre-tapped N-S mileage potentiometer, the wiper being driven by the N-S (cosine) output of the ball resolver. For the datum station the centre tap is connected to earth; for other stations a bias voltage is applied from the "station set" transformer and the "station set" potentiometer in the selector unit. The voltage pick-off from the N-S computer potentiometer is therefore proportional to the N-S distance from the selected station. With no wind set, this voltage is compared, through the amplifier, with a similar potentiometer system in the indicator, any out of balance being amplified and used to drive the indicator N-S motor which is coupled to the indicator N-S helipot and the N-S marker arm.

A similar system applies a further bias for wind mileage. The wind setting potentiometer, which is manually set to component wind speed in the control unit, is energised from the wind transformer in the junction box. An escapement controlled constant speed motor moves the wiper of the wind integrator potentiometer, applying a voltage proportional to time to the wind transformer. The wiper is moved against a spring loading through a friction clutch, which can be released by the wind reset control to re-start wind integration, or is automatically released after two hours duration.

3.5 Memory system

A mechanical memory system is incorporated in the computer unit in the form of slant plane clutches between the ball resolver output shafts and the mileage helipots. First operation of the hold motor disengages the clutches by a cam system, leaving the helipots stationary whilst the resolver output shafts continue rotating. The next operation of the hold motor re-engages the clutches, the slant faces on the helipots side being pulled round to mate with the resolver output faces, thereby moving the helipots by an amount equivalent to the stored mileage.

Wind mileage is not stored by this memory system.

One clutch can be seen in Fig.6.

3.6 Control relay system

Push button switches control the functioning of the instrument through a series of relays shown in Fig.14.

The sequence relays R5, 6 and 7 which ensure a delay of 25 seconds whilst resetting takes place, are made by the "zone change", "zero" and "wind reset" switches. Relay R6 releases the wind integrator clutch and energises the delay motor, which rotates a cam once to give an instantaneous break in the delay switch after 25 seconds, so breaking the sequence relays. Relay R7 locks the sequence relays on until the time delay is completed, and energises the hold motor to store incoming mileage during the time delay. For normal following, the indicator motors are driven from the mileage servo-amplifier, but when the sequence relay R5 is made the computer helipot reset motors operate to correct the computer pots during the zeroing and wind reset cycles.

The zeroing relays R1 and 2 are made by the twin "zero" switches provided the "zone change" switch is in its normal position. R2 locks the zero relays until the delay switch is opened and energises the sequence relays. R1 transfers connection of the servo-amplifiers from the indicator pots to earth. Thus the computer helipots are reset to zero position (through R5), and when the time delay ends the indicator pots are driven to the corresponding zero.

The "zone change" switch makes the relay R10, which first powers the wind integrator clutch to maintain the wind mileage, and then the sequence system, which would normally zero the wind mileage.

The "wind reset" switch makes the sequence relays, R6 breaking the wind integrator clutch to zeroise the wind integrator potentiometer, and R5 changing the N-S and E-W servo amplifier outputs from the indicator motors to the computer reset motors. This means that the indicator position remains unchanged whilst the computer helipots are servoed to balance, i.e. the wind mileage to time of wind reset remains in but wind integration starts again.

The "set wind" switch makes relays R3 and 4. R3 disconnects air mileage input voltages from the computer pots and earths the centre taps of the wind potentiometers and transformers; thus only the set wind is shown on the indicator dial. R4 disconnects the wind integrator wiper to provide a standard setting voltage at the wind transformers, at the same time supplying power to the indicator light.

The station set relay R8 alters the inputs to the N-S and E-W servo-amplifiers from air-plus-wind-miles voltages to setting voltages from the station set potentiometers, which therefore position the indicator cross-bars relative to the centre of the indicator dial. R9 disconnects the wind setting system and powers the indicator light.

The hold-motor operates whenever the hold switch is pressed or when the sequence relays are made, through R7. This motor drives a cam to operate the hold changeover switch and also disconnects a slant plane clutch in each ball resolver output shaft, thus decoupling the computer helipots. At the end of the time delay or when the hold switch is pressed again, the hold motor re-engages the clutches thereby unstoring the memory.

3.7 Component units

The indicator unit is shown in Figs.1, 2 and 3. It contains the heading motor driving the heading synchro and heading pointer, and the N-S and E-W mileage servo-motors driving helipots and cross-bar indicators. The cross-bars consist of wires cemented to nylon threads which are moved by pulleys coupled to the mileage motors. Four relays operated by the range switches, control through trimmers the input voltage to the transformer supplying the mileage helipots. This provides a scale change in the movement of the indicators for a given computer pot movement.

The control unit, (Fig.4), contains the differential synchro for setting variation, the N-S and E-W wind setting helipots, and the push-button switches of "wind set", "wind reset" and "hold".

The press-button unit of Fig.5 consists of the "zone change" switch, a double "zero" switch, and a plug-in selector pack which is removed by lifting the extractor lever. The push button selector pack has a base station, and four alternate ones which are set up by four pairs of adjusting screws, exposed when the "set station" switch is pressed. Alternative selector packs can be plugged in provided they have one common station.

The computer box is shown in Figs.6 and 7, containing the course synchro and servo motor coupled to the ball resolver; the airspeed system of Section 3.2; the convergency potentiometer, transformer and servo-motor; the N-S and E-W transmission helipots, transformers and reset motors; and the hold motor and memory clutches.

The amplifier-junction box of Fig.8 contains the delay motor and control relays, the high accuracy resolver for convergency correction, and the constant speed wind integrator motor, potentiometer and resetting clutch. The servo-amplifiers are separate sealed plug-in units, with a "minicube" blower providing forced cooling.

4 Operational use

4.1 Before Flight

Set the latitude on the junction box scale to base station latitude. The lower push-button of the selector unit is the base station, and the four

alternate stations are set by pushing each button in turn, adjusting the screws exposed when the "push to set" lever is pressed, to bring the cross-bar intersection to the correct bearing and distance of each alternate station relative to the base. The "station set" indicator light should be on only when the "push to set" lever is pressed.

Under normal operating conditions only the green "nav" light should be on. If the indicator shows "wind set" press the "push to set wind" switch on the control unit; if "hold" and "nav", press the "hold" switch; if "hold" only, press the "zone change" switch.

When the indicator shows "nav" only, select the base station and zeroise by pressing simultaneously the two "zero" buttons.

It must be remembered that a time delay of up to 25 seconds will operate when the "zero", "zone change" or "wind reset" controls are used.

To set wind, press the "set wind" switch on the control unit, position the indicator cursor to wind bearing and rotate the two wind control knobs to bring the cross-bar intersection to the correct wind velocity on the cursor. Press once more the "set wind" switch to restore to normal.

If the junction box is inaccessible during flight the latitude scale should be adjusted to the mid-flight latitude after the station selector adjustments.

4.2 During flight

Set variation at the control unit. The indicator will show the range and bearing of any of the five stations from the aircraft's computed position by pressing the appropriate selector. Alternative selector units can be inserted to extend the flight range by first selecting the common station, then pressing the "zone change" control, changing to the new selector pack, again selecting the common station, and finally pressing the "zone change" switch once more.

If a ground fix is obtained which does not agree with the range and bearing of the selected station as shown on the indicator, press the "hold" switch and correct by rotating the wind knobs. This will mean that the set wind will alter, and the amount of the new wind can be seen by pressing the "set wind" switch. Then press once more to return to "hold" ("hold" and "nav" lights on).

If the new indicated wind is questionable, press the "wind reset" switch, wait 25 seconds until the "nav" light shows again, and then set wind as in 4.1. This will leave the indicator in the corrected ground position and wind integration will restart from the time of "wind reset". Finally press the "hold" switch to unstore.

If during a long flight, the "wind set" light shows, the wind integrator will have reached its two hour limit. Press the "wind reset" switch to restart wind integration.

The "hold" control will allow up to 150 nautical miles of air mileage to be stored in memory.

The aircraft may be homed to the selected base by turning until the heading pointer lies through the cross-bar intersection, but it should be remembered that by doing this drift is not allowed for and the approach path will not be direct.

5 Laboratory Tests

All tests were carried out at room temperature (about 20°C), normal ground pressure and without applied vibration.

Table I gives leading particulars of the instrument.

Table II shows the accuracy of compass setting and variation.

The linearity of the airspeed follow-up motor can be seen in Table III and Fig.15, and backlash in the airspeed system up to the variable gear in Table IV and Fig.16.

Table V and Fig.17 show the linearity of the wind setting potentiometers, and Table VI and Fig.18 the linearity of the wind integrator.

Table VII gives the voltage pick-off at the computer helipots (indicator helipots were identical for no wind) and the indicated ground position error. Voltage against indicated position is plotted in Fig.19 to show the indicator follow-up accuracy. The effect of a sudden turn amounted to 15 nautical miles on the 250 scale or 3 on the 50 scale.

Parallax due to the recessed dials could be one cursor division, equivalent to 2, 10 or 20 nautical miles depending on the scale, and movement of the cursor glass was about half one division. Movement of the cross-bar indicators was in steps of $\frac{1}{3}$ to $\frac{1}{2}$ division, i.e. 1, 3 or 7 nautical mile steps. Zeroing introduced an error on the N-S indicator of up to 4 nautical miles on the 50 scale.

It was found during the tests that the hold motor was inoperative when the voltage was below about 23 V D.C. and unreliable at higher voltages. This resulted in lost motion at the clutches when unstoring, giving a varying time delay before the computer helipots were driven of up to 10 minutes. The existing memory system of slant plane clutches relies on good contact being maintained at the clutch faces in the unstored position. This is done by the hold cams applying pressure through leaf springs; hence the initial starting load that the hold motor must overcome is considerable.

6 Conclusions

The Mk.2 Position and Homing Indicator is a considerable improvement over the Mk.1 instrument in all respects. Presentation of ground position on the indicator unit, with its expanding scale system, is very good, but due to parallax the indicator must still be carefully positioned. Convergency correction, although approximate, will be a great advantage at high latitudes.

Individual servo systems show an accuracy of 2% or better, but accumulated backlash, stepping, etc. result in an overall accuracy of about 8 nautical miles on the 50 scale and greater absolute error (though not correspondingly so) for the other scales.

On the instrument tested the design of the memory store affected the operation of the hold system, and some improvement might be possible here. Wind mileage is not stored but continues moving the cross-bars when the instrument is on memory, and this could result in errors if high winds and long storage times were involved, since in correcting to a ground fix the wind mileage during store would have to be corrected by altering the set wind.

Miniature components have been incorporated whenever possible and the effects of environmental conditions on such components may be quite

detrimental to serviceability in use. This should be investigated before the instrument is considered for the Services.

Attached:-

Tables I - VII.
Drgs.Nos. IN.33014 - 33024.
Negs.Nos. 121,771 - 121,774.
Detachable Abstract Cards.

Advance Distribution:-

M.O.S.(Air) Headquarters

Deputy Controller of Aircraft (DCA)
DGTD(A)
PDQRD(A)
ADSR (Records)
DA Nav.
ADRD Inst A
ADRD Inst B
RD Inst Nav. (Action Copy)
TPA3/TIB 30
SAE MOS Assistant for Standardisation (Air) 25

I.A.P. Department

Head of Department
Head of Inst. Div(s)
Head of Flight Insts. Section
Author
TPI Section
File

M.O.S.(Air) Establishments

AAEE 6

R.A.E.

Director
DDRAE(E)
Pats.1
Library

TABLE I

Leading Particulars

		Wt (lb)
Indicator unit	5" × 5¼" (face) × 6" + ¾" plug overhang	5¼
Control unit	3¼" × 3¼" (face) × 5" + 2½" plug overhang	1¾
Selector unit	6¾" × 2" (face) × 4½" + 1" plug overhang	2½
Computer unit	13¼" × 4½" × 8¾" + 1½" plug overhang	16½
Junction box amplifier	7¾" × 9½" × 4½"	9¼
	Total weight excluding harness	35¼

Input

27.5 volt D.C.
115 V 400 cycles single phase
True airspeed synchro input
Compass synchro input.

TABLE II

Compass System

Compass Setting	0	30	60	90	120	150	180	210	240	270	300	330
Indicator Reading	359	029	059	089	119	149	179	209	239	268	298	328½

Variation Set East	0	10	20	30	40	50	60
Indicator Reading	359	009	019	029	039	049	059

Variation Set West	0	10	20	30	40	50	60
Indicator Reading	359	349½	339	329	319	309	299

TABLE III

Airspeed follow-up system

Airspeed	100	150	200	250	300	350	400
Motor Volts	7.9	11.2	14.5	17.8	21.2	24.5	27.8
R.P.M.	0.812	1.126 1.132	1.662	2.080	2.492	2.920	3.328

Airspeed constant speed motor 8.7 r.p.m.

TABLE IV

Airspeed Variable Gear

Airspeed	Ball carriage movement (mm)
100	0
150	0.94
200	1.88
250	2.79
300	3.72
350	4.64
400	5.57
> 400	
400	5.42
350	4.50
300	3.59
250	2.71
200	1.80
150	0.91
100	0

TABLE V

Wind Setting Potentiometers

Wind setting on indicator	N-S potentiometer		E-W potentiometer	
	N volts	S	E volts	W
20			0.32	0.33
40			0.66	0.67
60			0.99	1.00
80	1.33	1.34	1.33	1.32
100	1.67	1.67	1.65	1.65
120	2.00	2.00	1.99	1.99
140	2.35	2.35	2.35	2.33

TABLE VI

Wind integrator potentiometer

Integration time (mins)	4	5	6	7	8	11	17	23	33
Wind pot. volts	0.60	0.75	0.97	1.13	1.38	2.03	3.29	4.60	6.70

TABLE VII

Indicator Follow-up System

Time (mins)	Indicated Position	N-S Computer pot. volts	N-S Component mileage	E-W Computer pot. volts	E-W Component mileage	Position error n.m.
(1)	Airspeed 360 K at 225° heading					
0	0	0	0	0	0	
3	18/045°	0.18	12½	0.21	12½	0
4	24½/045°	0.27	17½	0.25	17½	0
5				0.35	21½	
6		0.41	26			
7	40 "			0.41	27½	-2
9	54 "	0.63	40			0
10	59 "			0.61	41½	-1
11		0.78	50			
12				0.82	54	
13		0.86	58			
15	95 "	1.00	67	0.98	67	+5
17		1.12	76	1.08	76	
18	117 "	1.30	88	1.25	88	+9
24	150 "	1.56	105	1.51	105	+6
27	170 "	1.78	120	1.74	120	+8
30	186 "	1.96	131½	1.91	131½	+6
33		2.16	146	2.12	146	
36	224 "	2.36	158	2.30	158	+8
39	240 "	2.54	169	2.51	169	+6
42	262 "	2.76	185	2.72	185	+10
45	280 "	2.98	197	2.92	197	+10
(2)	Airspeed 360 K at 045° heading					
0	280/045°					
3	266/043	2.90	195	2.72	182	-4
6	250/043	2.70	183	2.53	171	-4
9	233 "	2.45	171	2.28	159	-7
12	214 "	2.23	157	2.06	146	-6
15	196 "	1.96	144	1.81	134	-6
18	180 "	1.76	132	1.60	123	-8
21	163 "	1.56	120	1.39	111	-7
24	143 "	1.36	105	1.24	98	-7
27	125 "	1.18	92	1.07	85	-7
(3)	Airspeed 400 K at 000°					
0	0	0	0			
35	235/000°	3.51	235			+2
42	280 "	4.22	280			0
47	316 "	4.78	316			+3
52	348 "	5.22	348			+1

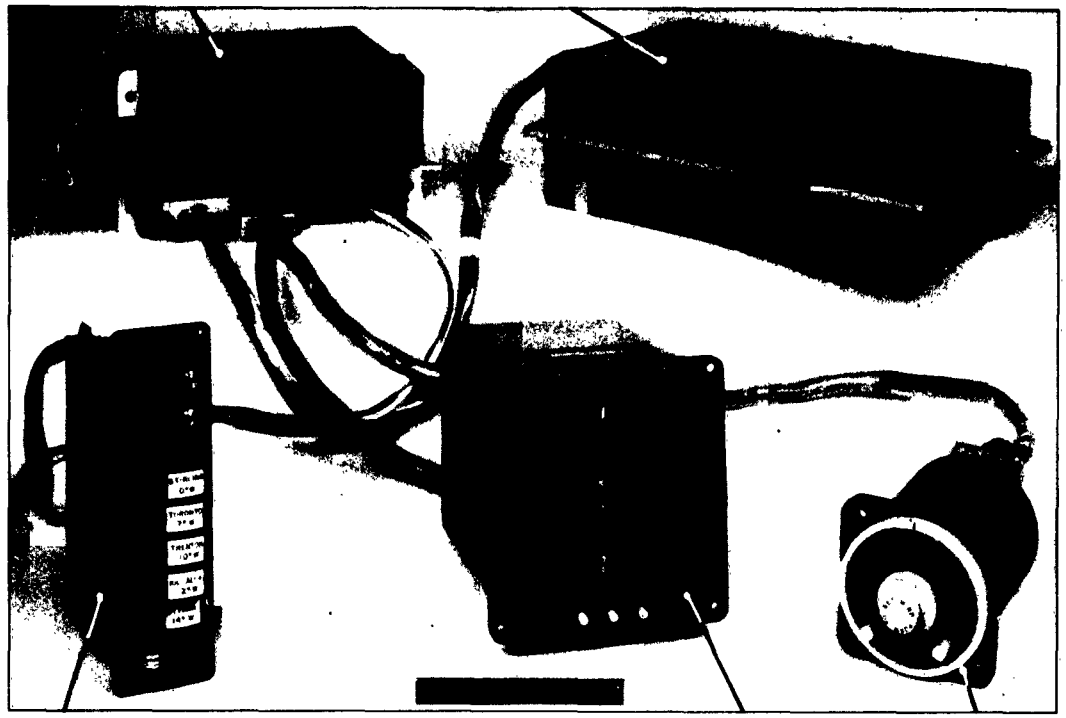

FIG.1. COMPONENT UNITS

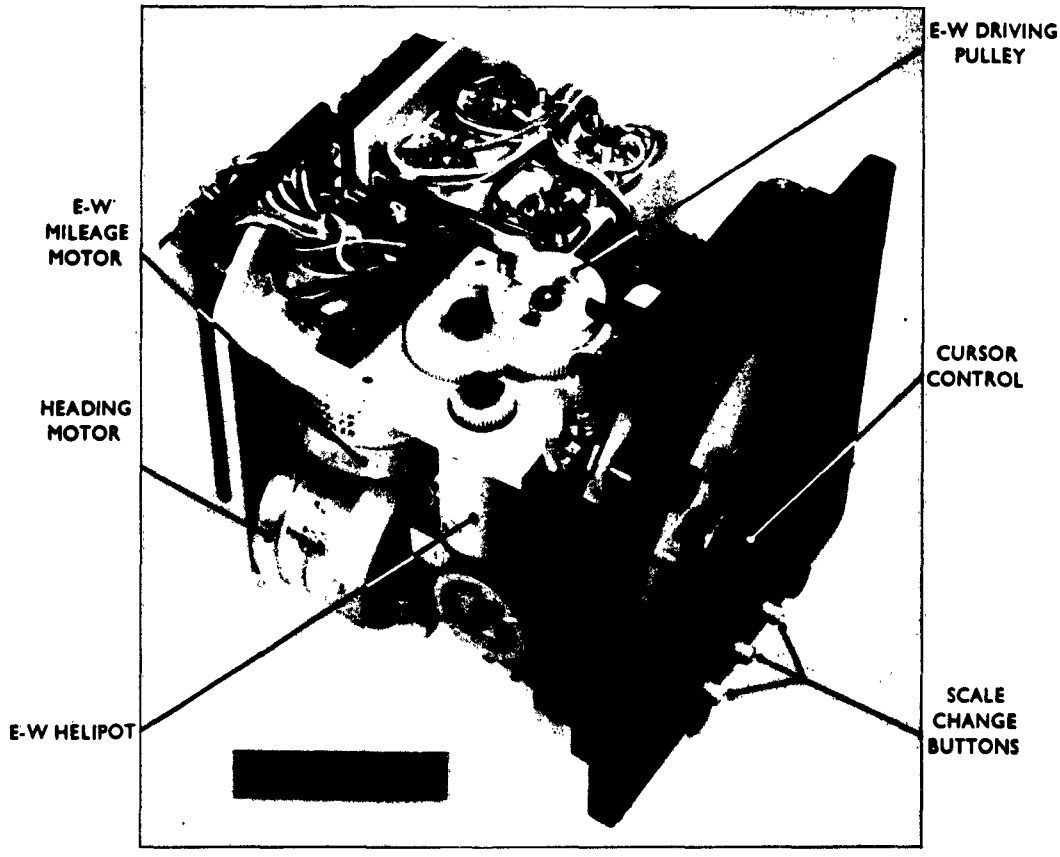

FIG.2. INDICATOR UNIT

RAE 121771 55

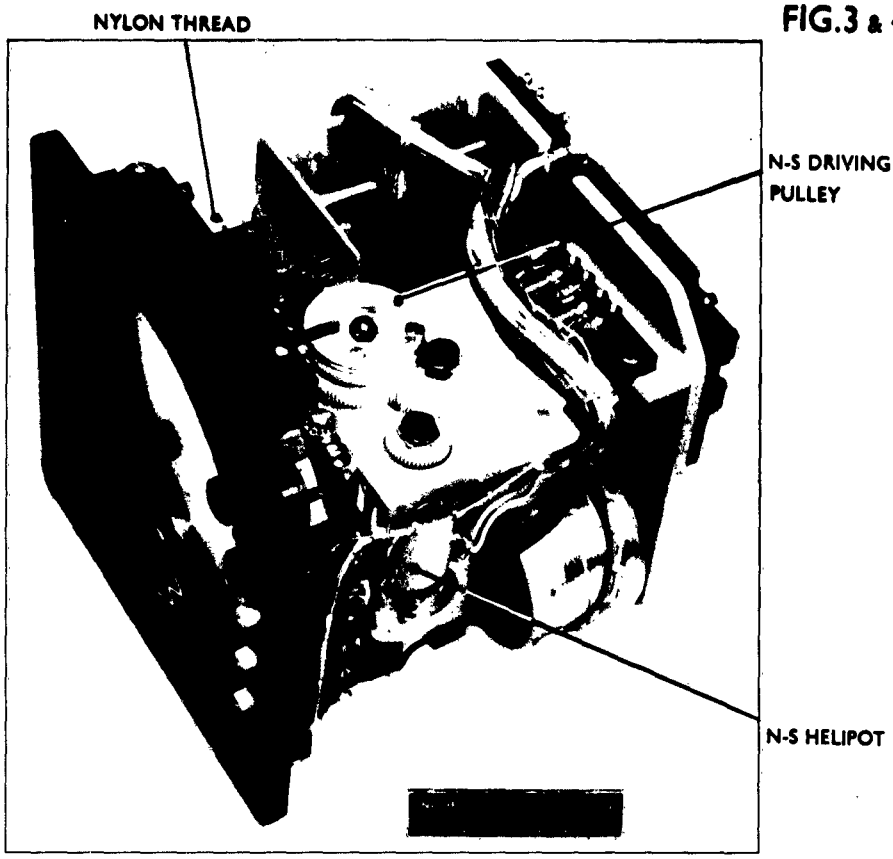

FIG.3. INDICATOR UNIT

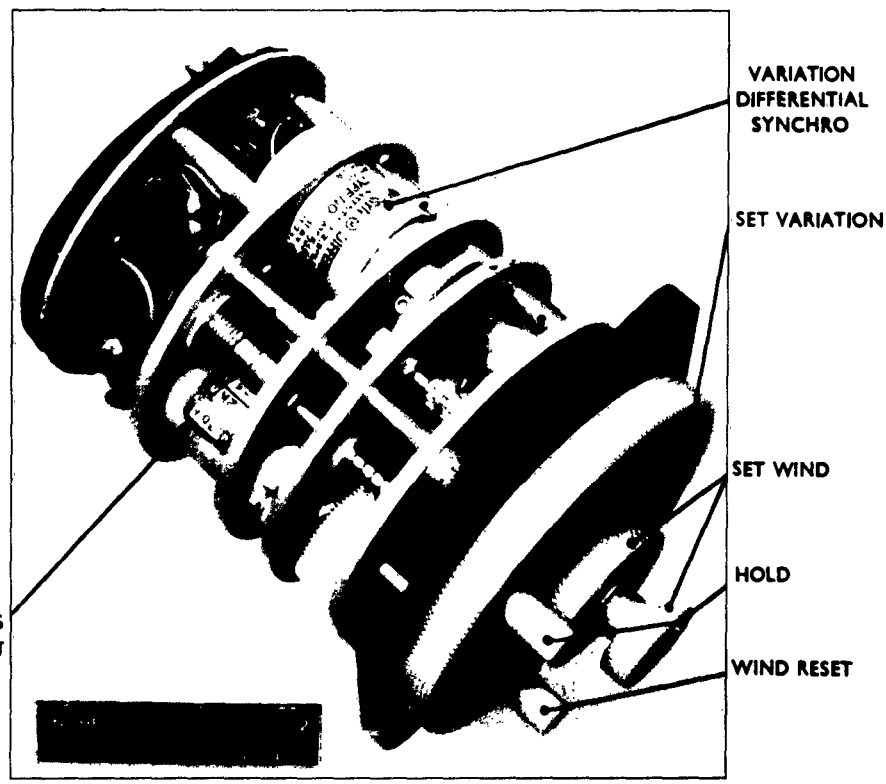

FIG.4. CONTROL UNIT

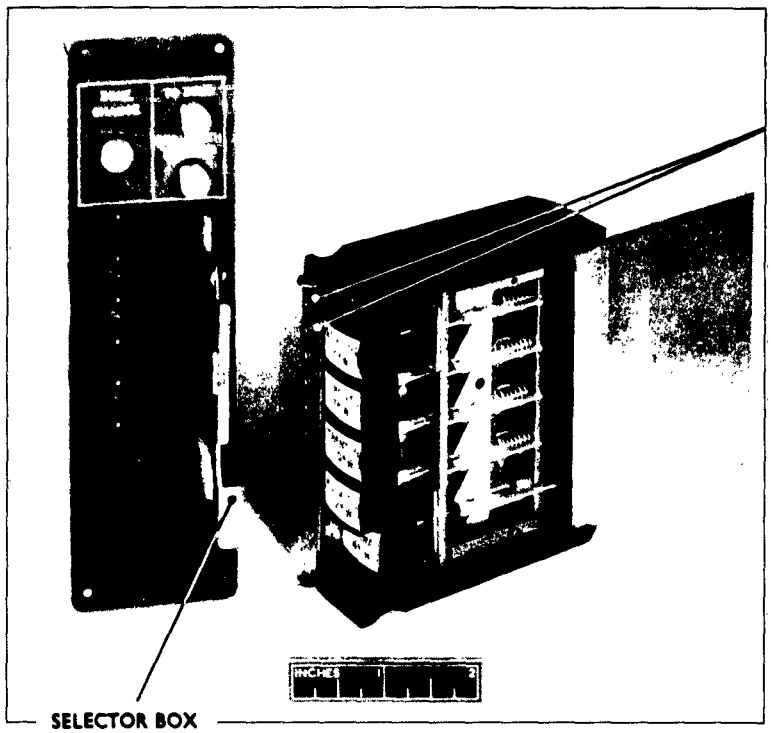

FIG.5. SELECTOR UNIT

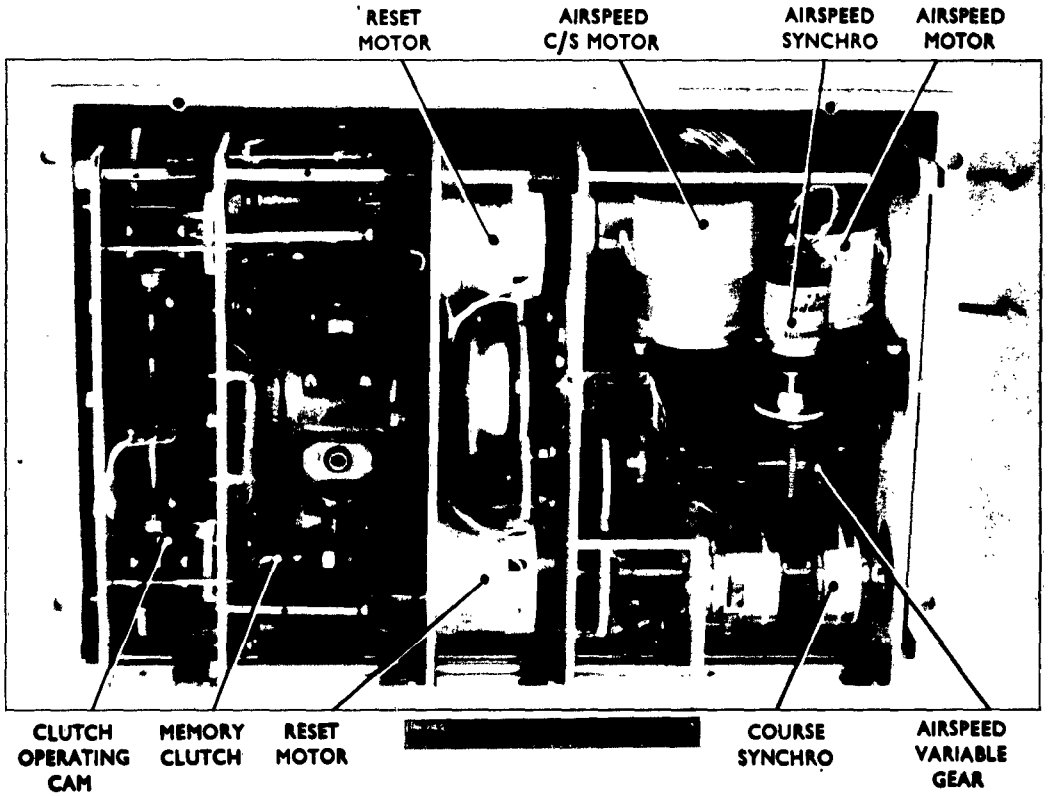

FIG.6. COMPUTER UNIT

RAE 121773 55

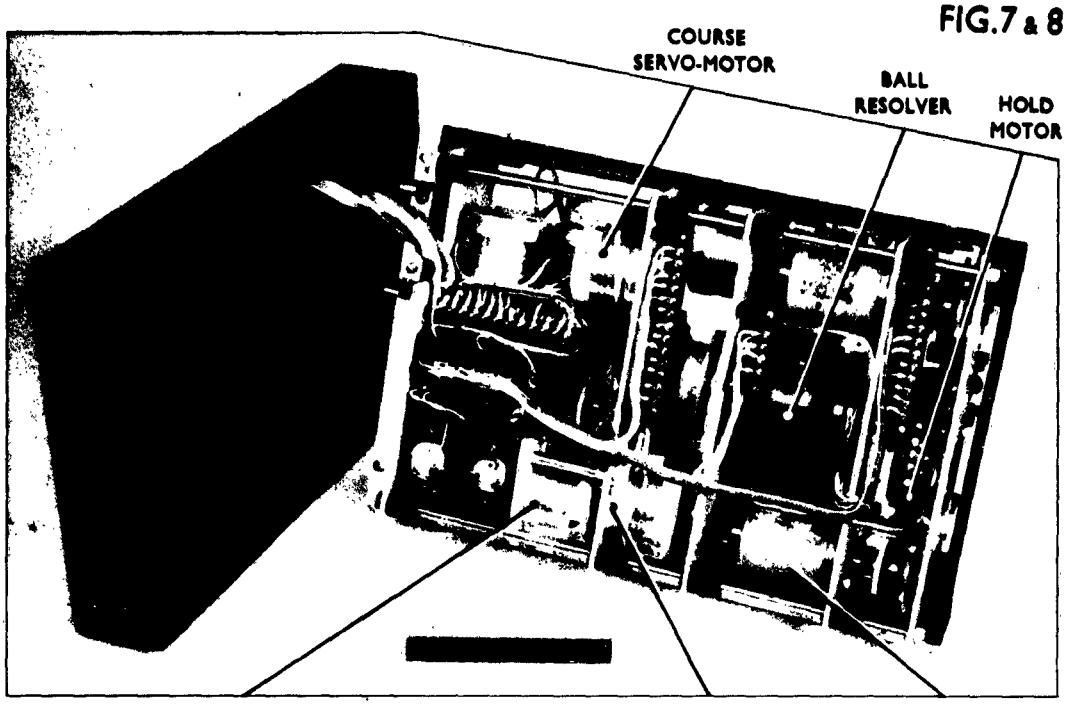

FIG.7. COMPUTER UNIT

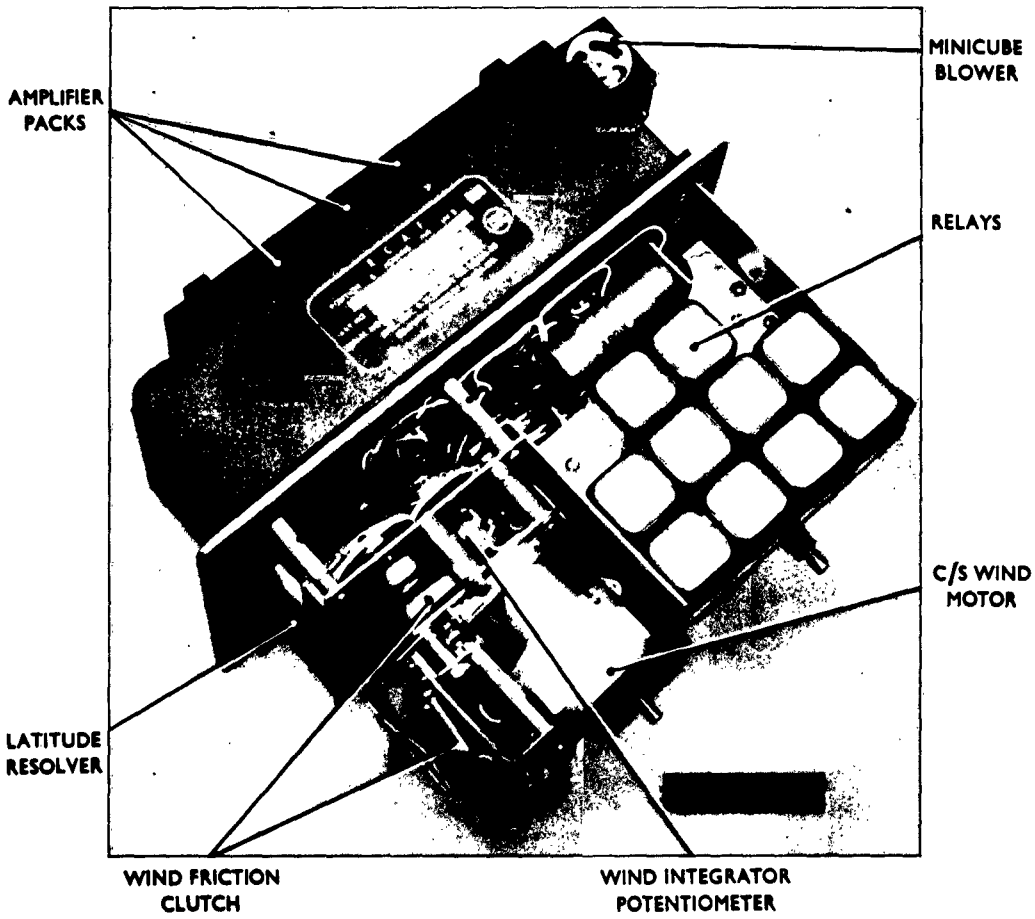

FIG.8. AMPLIFIER-JUNCTION BOX

RAE 121774 55

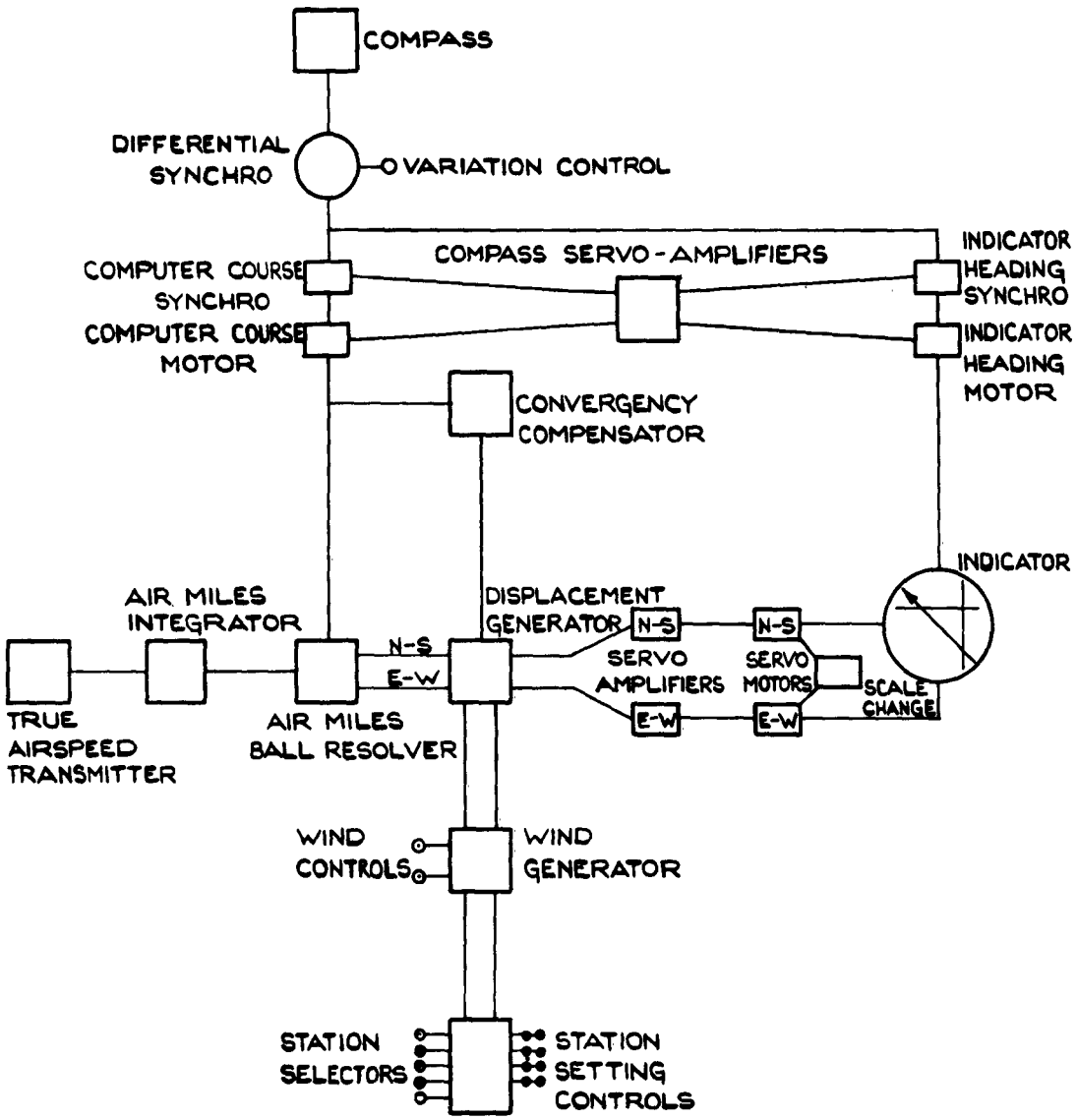

FIG.9. PRINCIPLE OF OPERATION.

FIG.10

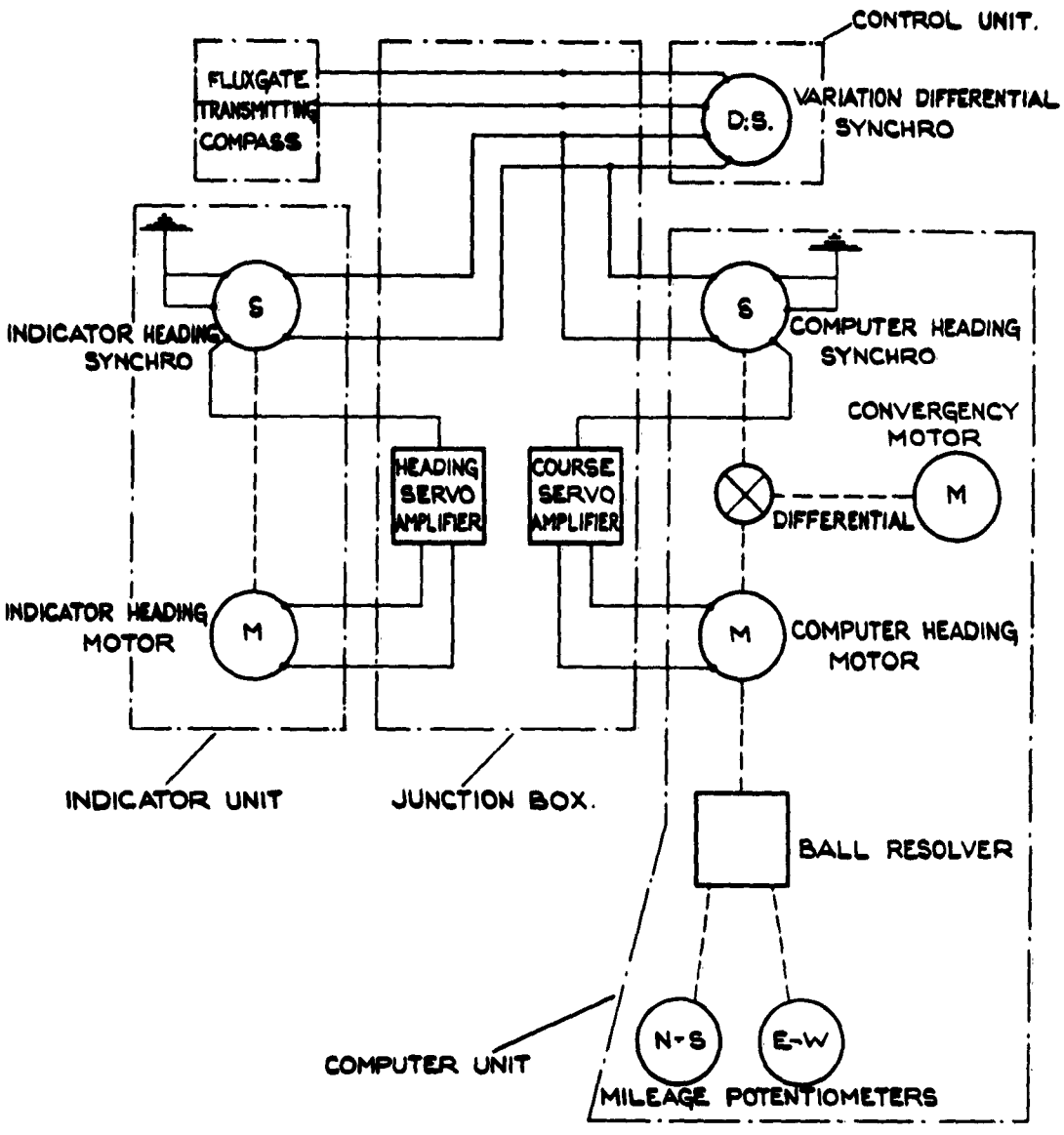

FIG.10. HEADING SYSTEM. (SCHEMATIC)

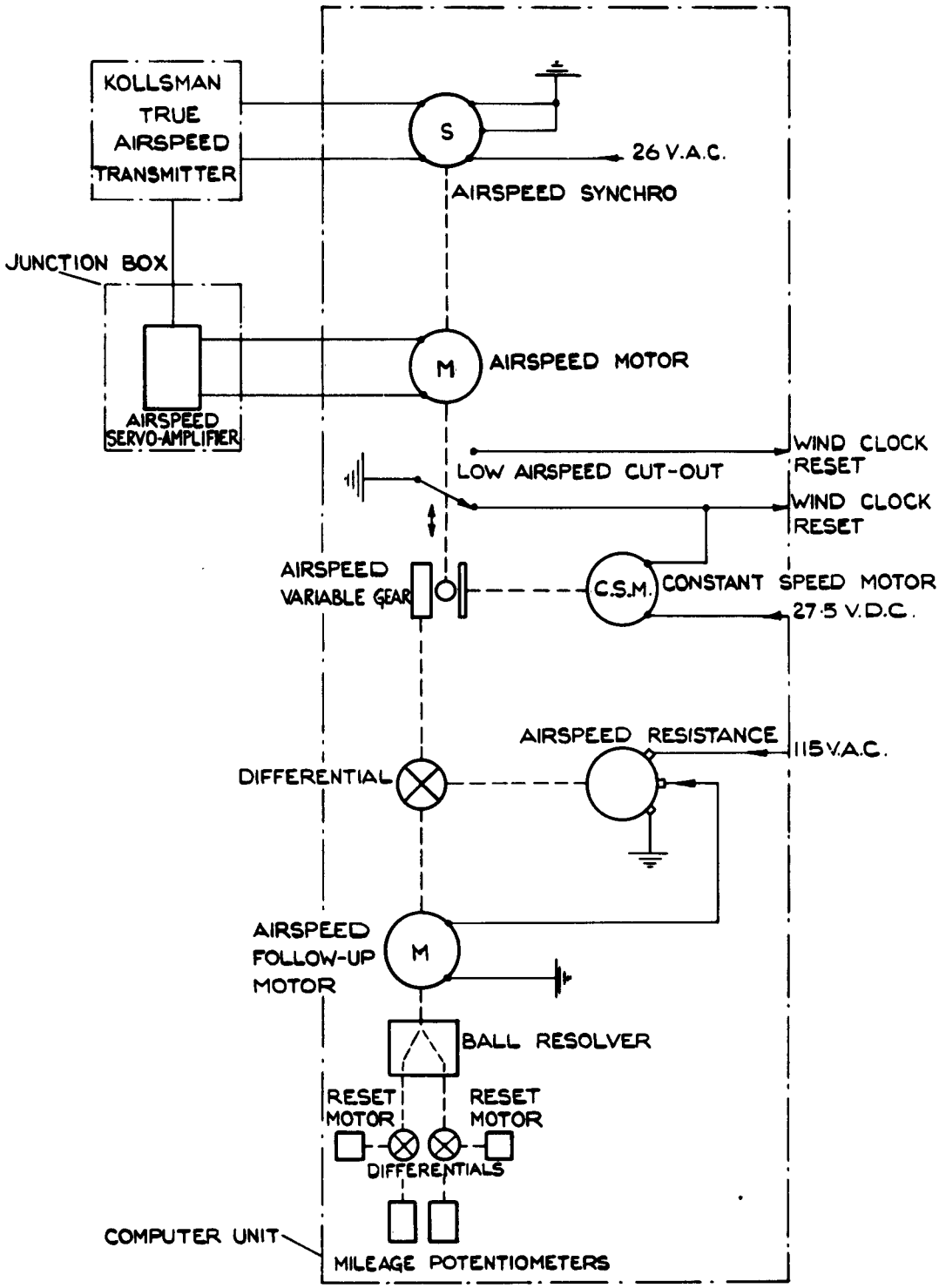

FIG.11. AIRSPEED SYSTEM. (SCHEMATIC)

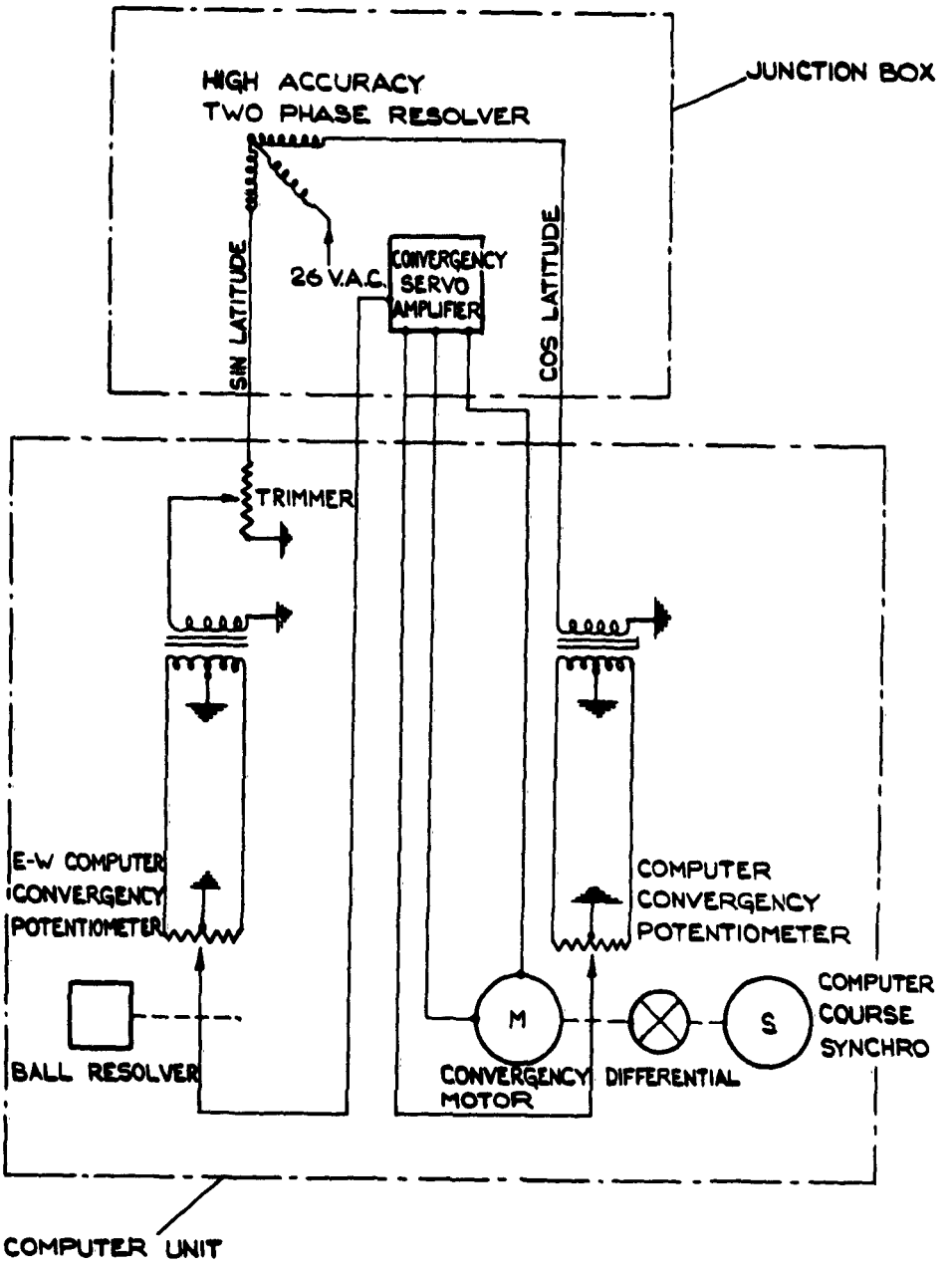

FIG.12. CONVERGENCY SYSTEM. (SCHEMATIC)

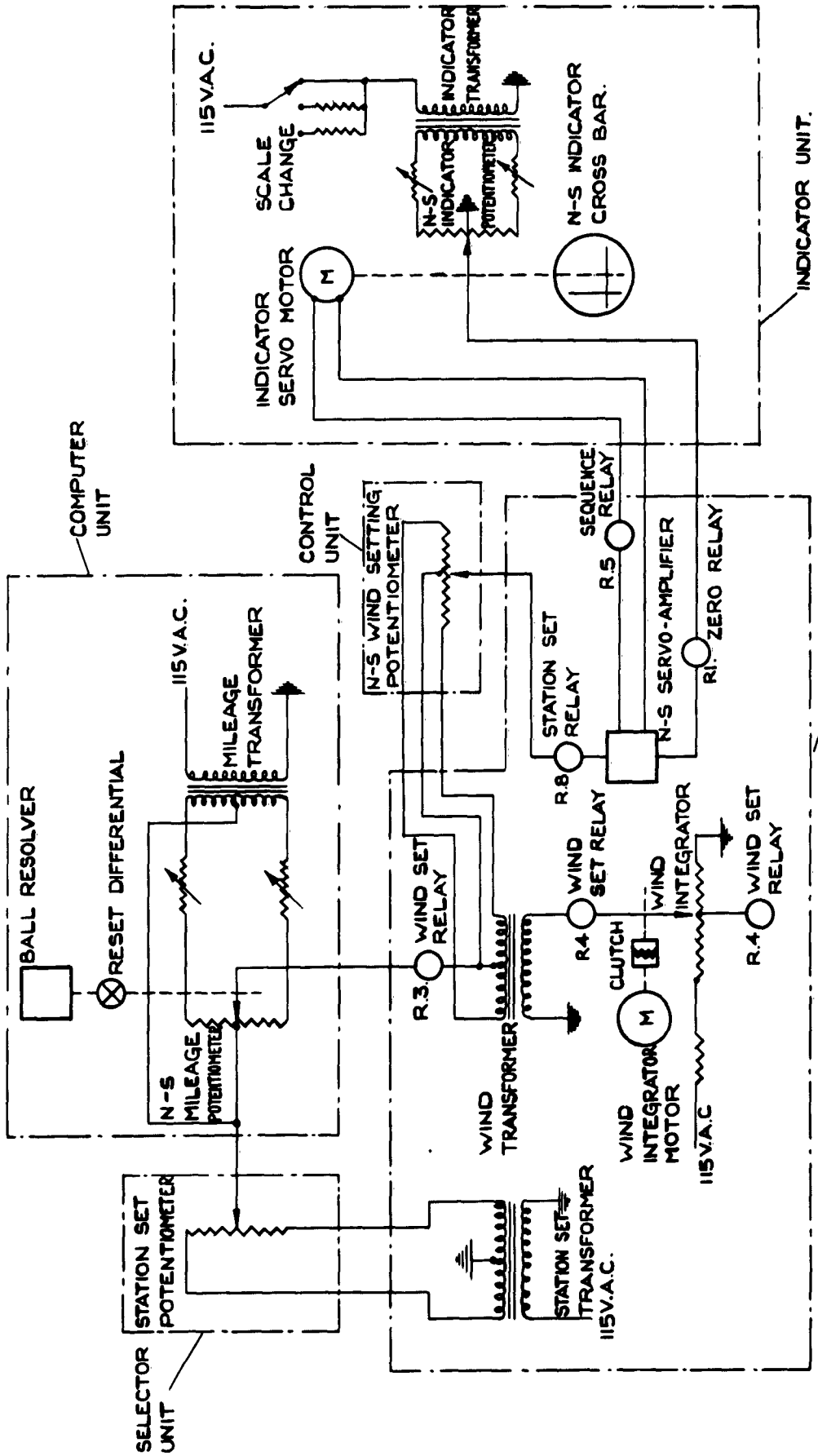

FIG. 13. N-S INDICATOR TRANSMISSION SYSTEM. (SCHEMATIC)

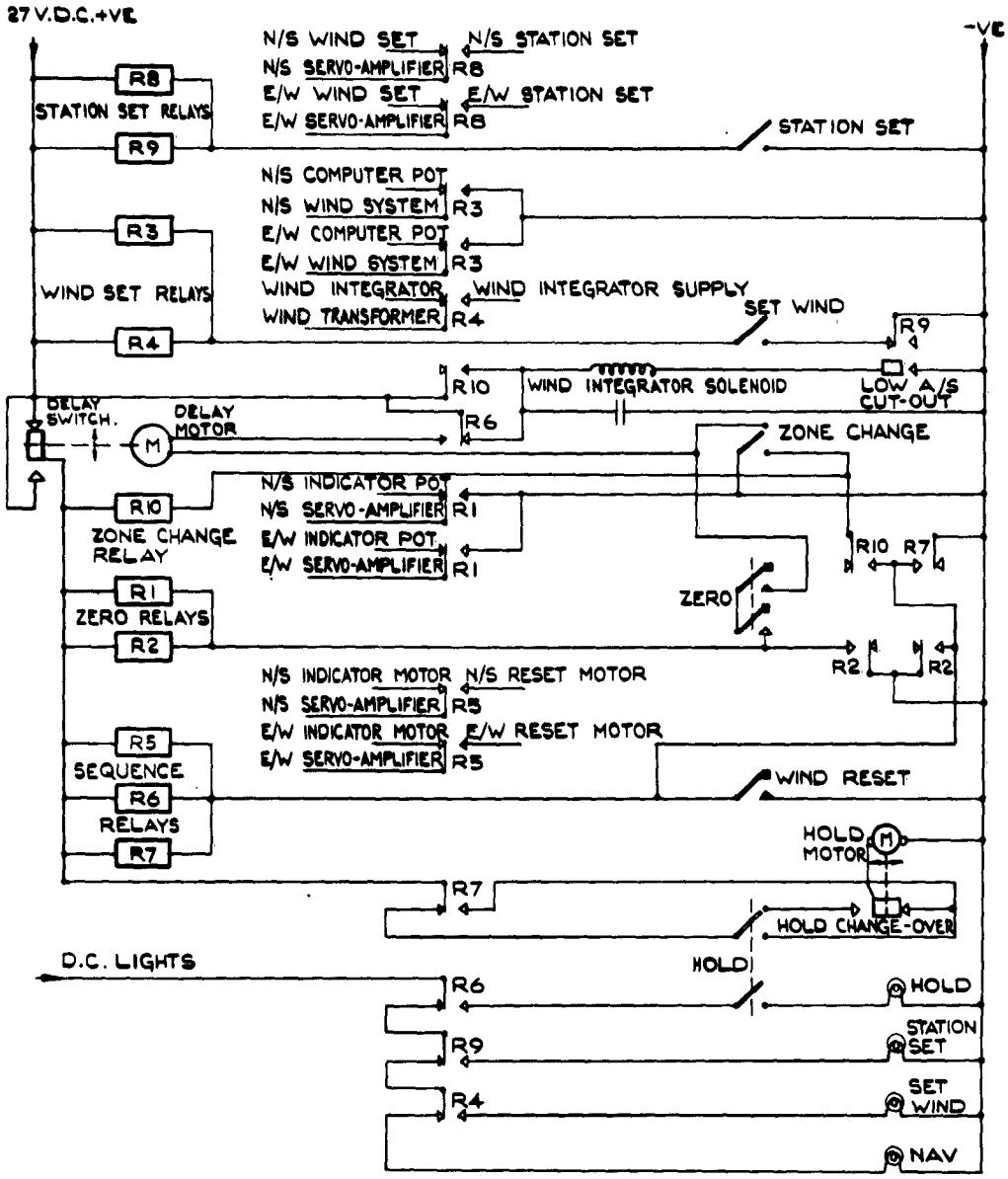

FIG. 14. RELAY CONTROL SYSTEM.

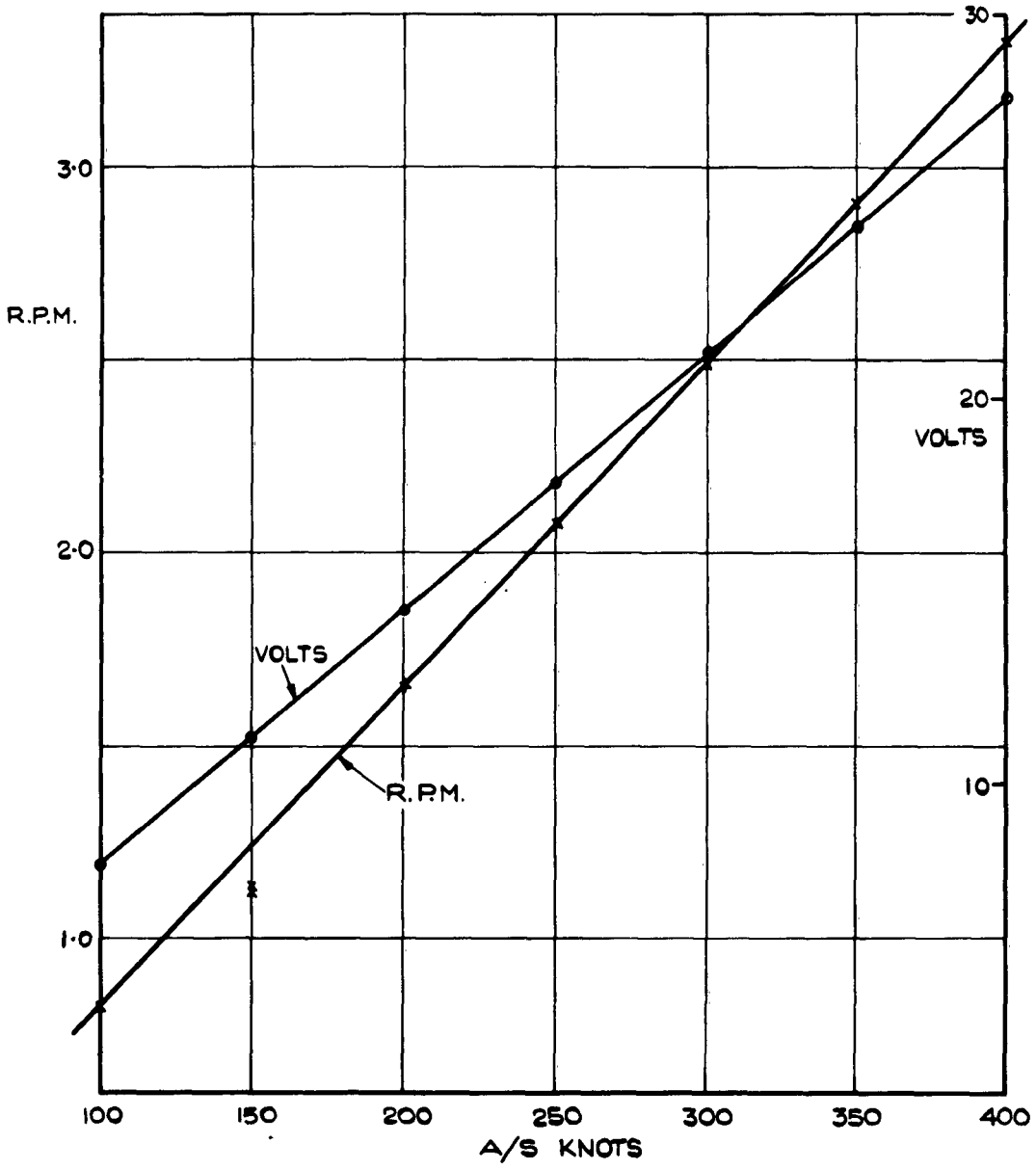

FIG. 15. AIRSPEED FOLLOW-UP MOTOR.

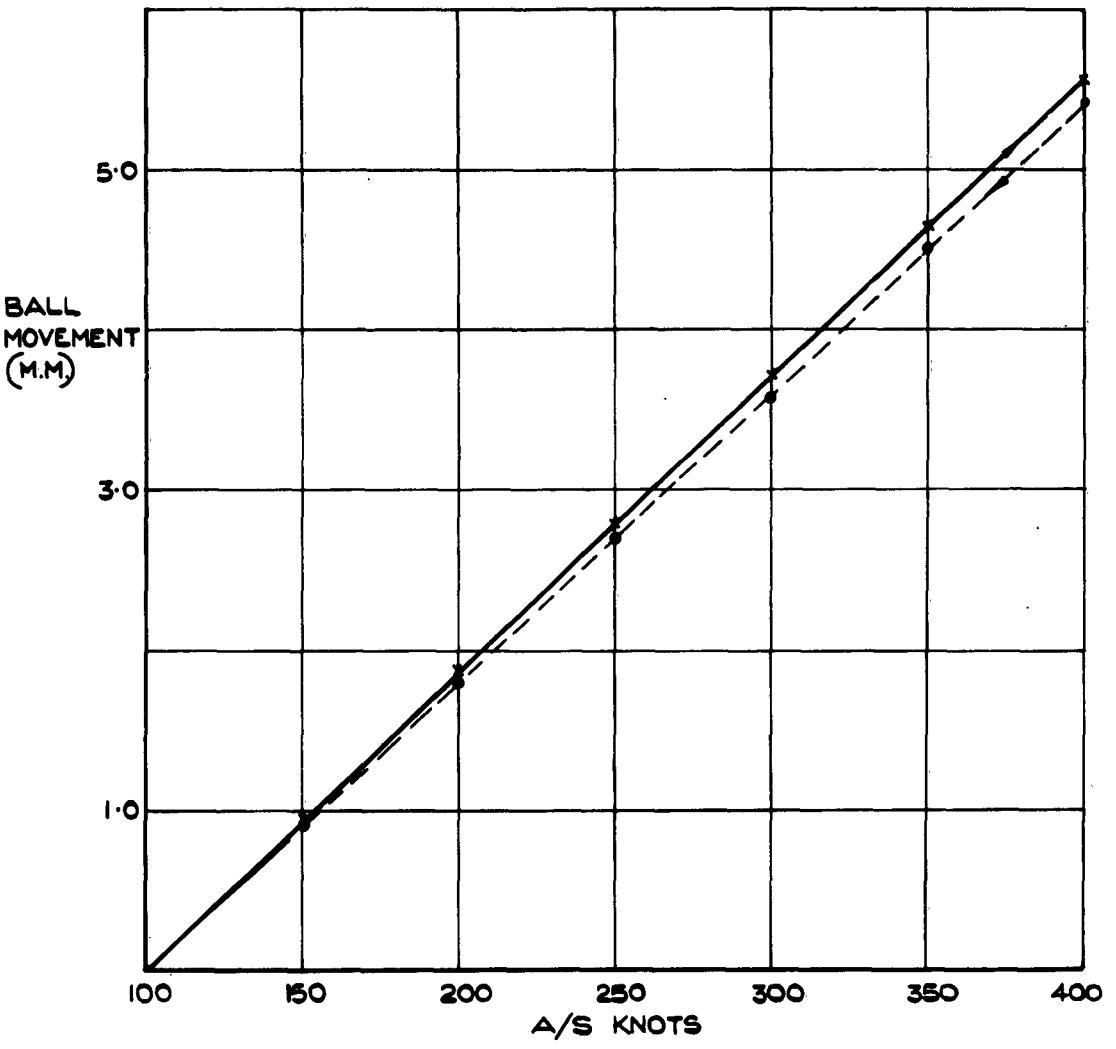

FIG.16. AIRSPEED-VARIABLE GEAR BALL MOVEMENT.

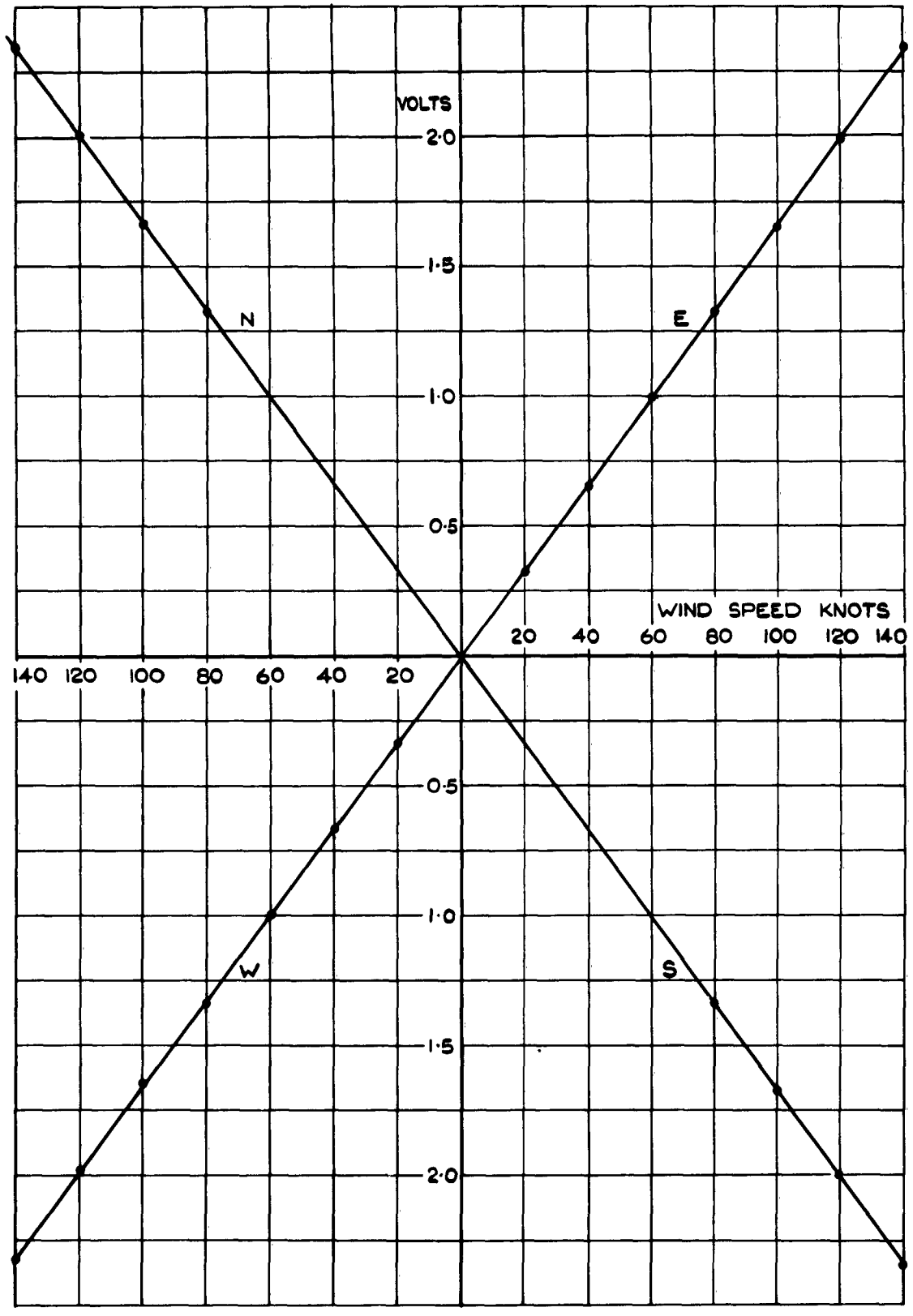

FIG.17. WIND SETTING POT.

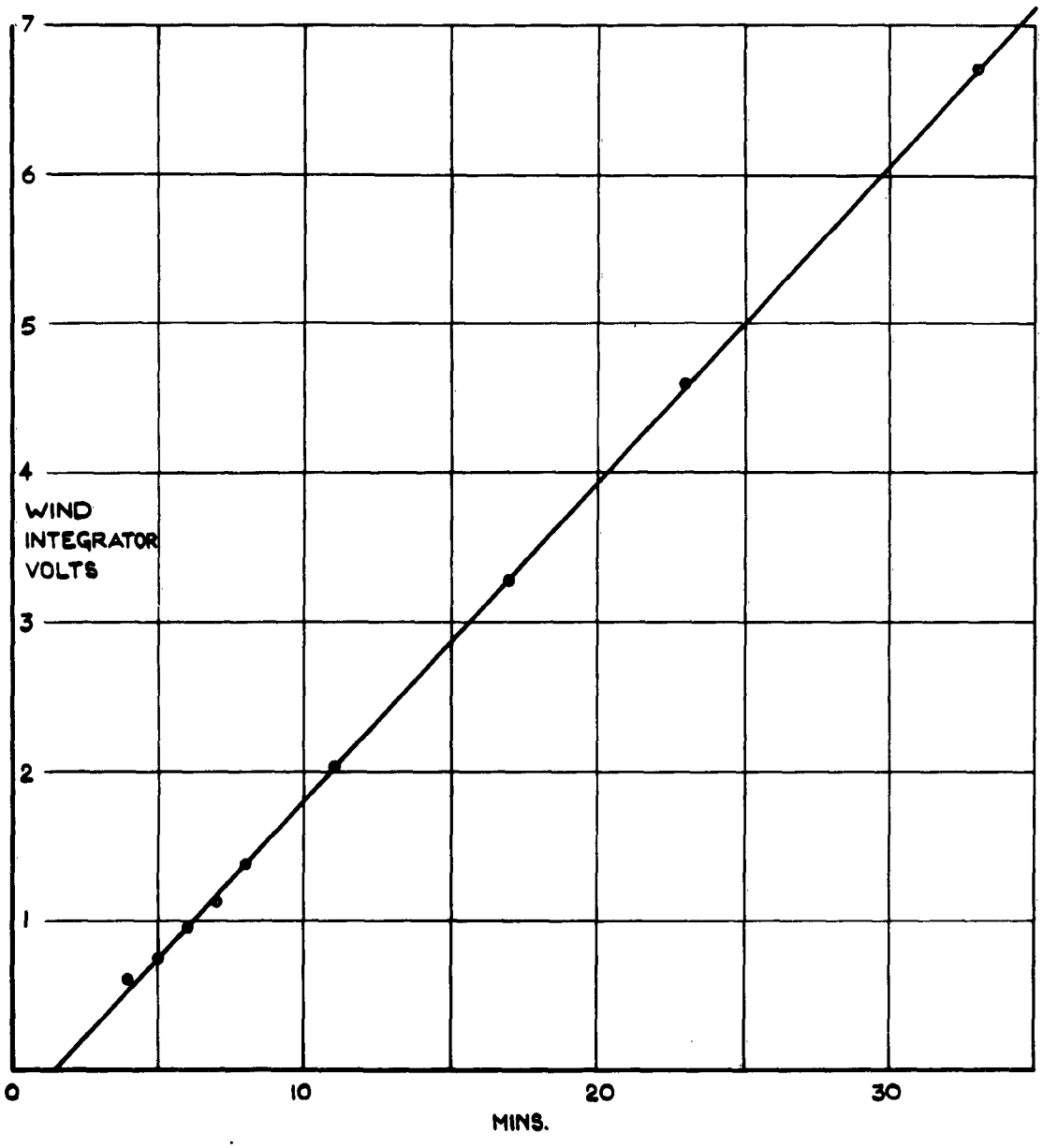

FIG. 18. WIND INTEGRATOR POT.

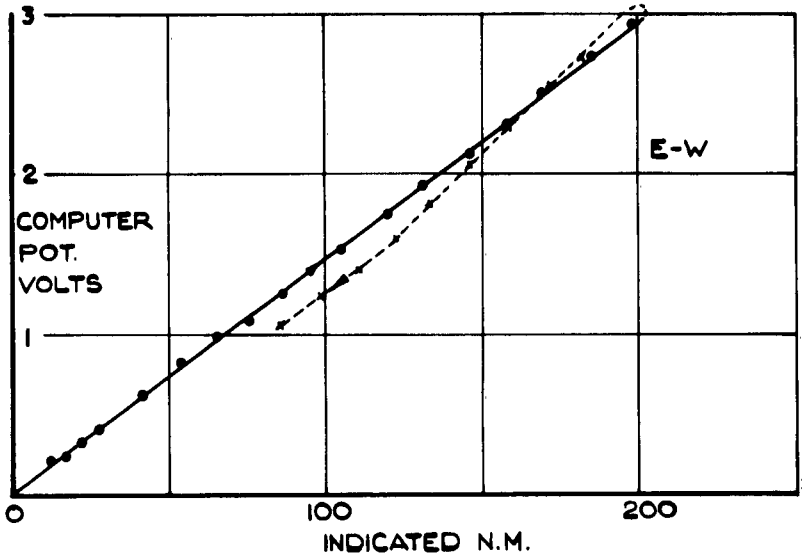

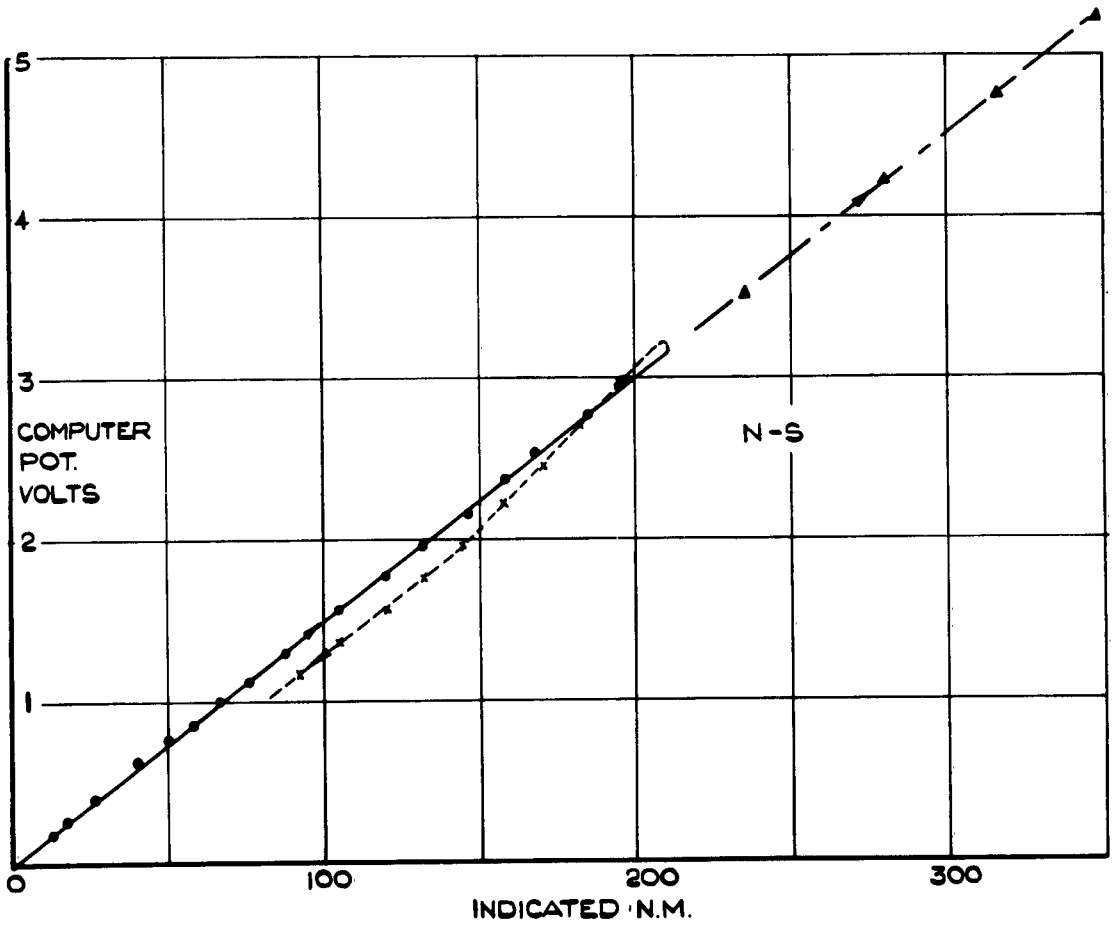

FIG. 19. INDICATOR FOLLOW-UP SYSTEM.

Information Centre
Knowledge Services
[dstl] Porton Down
Salisbury
Wilts
SP4 0JQ
22060-6218
Tel: 01980-613753
Fax 01980-613970

Defense Technical Information Center (DTIC)
8725 John J. Kingman Road, Suit 0944
Fort Belvoir, VA 22060-6218
U.S.A.

AD#: AD 091920

Date of Search: 30 July 2008

Record Summary: AVIA 6/19057
Title: Canadian position and homing indicator Mk 2
Availability Open Document, Open Description, Normal Closure before FOI Act: 30 years
Former reference (Department) TECH NOTE IAP 1046
Held by The National Archives, Kew

This document is now available at the National Archives, Kew, Surrey, United Kingdom.

DTIC has checked the National Archives Catalogue website (http://www.nationalarchives.gov.uk) and found the document is available and releasable to the public.

Access to UK public records is governed by statute, namely the Public Records Act, 1958, and the Public Records Act, 1967.
The document has been released under the 30 year rule.
(The vast majority of records selected for permanent preservation are made available to the public when they are 30 years old. This is commonly referred to as the 30 year rule and was established by the Public Records Act of 1967).

This document may be treated as UNLIMITED.