UNCLASSIFIED

AD 281 807

Reproduced
by the

ARMED SERVICES TECHNICAL INFORMATION AGENCY
ARLINGTON HALL STATION
ARLINGTON 12, VIRGINIA

UNCLASSIFIED

NOTICE: When government or other drawings, specifications or other data are used for any purpose other than in connection with a definitely related government procurement operation, the U. S. Government thereby incurs no responsibility, nor any obligation whatsoever; and the fact that the Government may have formulated, furnished, or in any way supplied the said drawings, specifications, or other data is not to be regarded by implication or otherwise as in any manner licensing the holder or any other person or corporation, or conveying any rights or permission to manufacture, use or sell any patented invention that may in any way be related thereto.

281 807

716 300

PRINCETON UNIVERSITY

DEPARTMENT OF AERONAUTICAL ENGINEERING

NO OTS

DEPARTMENT OF THE NAVY
OFFICE OF NAVAL RESEARCH
(ADVANCED RESEARCH PROJECTS AGENCY)

Contract Nonr 1858(32) - NR 098-201
(ARPA Order No. 23-59; 23-60 Amend. 21)

BURNING RATE CONTROL FACTORS IN SOLID PROPELLANTS

Thirteenth Quarterly Technical
Summary Reports

For the Period of 1 Jan. 1962 to 31 March 1962

Aeronautical Engineering Report No. 446 m

Reproduction, translation, publication, use and disposal in whole or in part by or for the United States Government is permitted.

Prepared by: Kimball P. Hall
Kimball P. Hall
Research Associate

Joseph Wenograd
Joseph Wenograd
Research Associate

and: Richard B. Cole
Richard B. Cole
Air Reduction Company Fellow

Approved by: Martin Summerfield Jr
Martin Summerfield
Principal Investigator

17 July 1962

Guggenheim Laboratories for the Aerospace Propulsion Sciences
PRINCETON UNIVERSITY
Princeton, N. J.

AUG 9 1962
TISIA A

CONTENTS

		Page
	TITLE	1
	CONTENTS	2
I.	INTRODUCTION AND SUMMARY	3
II.	HIGH RESOLUTION PHOTOMICROGRAPHS OF PROPELLANT SURFACE DURING BURNING	3
III.	THERMOCOUPLE TRAVERSES OF THE FLAME ZONE	8
	FIGURES	

I. INTRODUCTION AND SUMMARY

~~During the first three months of 1962~~ research ~~was active on two topics:~~ (1) high resolution photomicrographs of the propellant surface during burning and (2) thermocouple traverses of the flame zone. The study of burning rates at ultra high pressures was inactive during the period because of an equipment breakdown at Picatinny Arsenal*. Additional data for this program are expected in July.

In the program of high resolution photomicrography, emphasis ~~during the period has been~~ divided between the design and construction of a suitable pressure vessel ~~(window bomb, which is now completed)~~ and a mathematical examination of the factors which limit the minimum size particle which can be resolved. The simultaneous requirements of very short (1 millisec. or less) exposure, adequate depth of field (a true f number of 100 or greater is essential), and maximum spatial resolution (fine grain film) mean that lighting demands are severe, that the optical system must utilize the finest quality optics available as standard optical equipment, and that film exposure and development must be carefully controlled in order that maximum resolution may be achieved.

The thermocouple traverse studies ~~have primarily been~~ concerned with selection of the best instrumentation for read-out of the temperature-time record from imbedded thermocouples. ~~Both an oscilloscope-Polaroid camera set-up~~ and a Heiland Visicorder, have been tried for this purpose. Ultimately an oscilloscope-strip camera will probably be employed. For purposes of instrumentation development, relatively coarse thermocouples (0.5 mil wire) were used, so that the records obtained were only qualitative in nature and their reproduction in the report was not justified.

II. HIGH RESOLUTION PHOTOMICROGRAPHS OF PROPELLANT SURFACE DURING BURNING

Efforts to develop techniques for the photomicrography of burning propellant surfaces led to the design of a preliminary, relatively low resolution system, which was described in the preceding quarterly report. The further development of these methods during the past quarter has involved, essentially, two aspects of the problem: first, design and construction of a

---

* Burning rate measurement at ultrahigh pressure will resume at Picatinny Arsenal in July. Parts for repair of their high pressure nitrogen accumulator were received in June.

suitable pressure vessel which provides optical access to the burning surface of the propellant strand; and second, development of an optical system suited to viewing the burning strand at magnifications up to 15 times on the film with sufficient resolution to allow viewing both individual oxidizer particles and the general nature of the burning propellant surface.

The basic specifications for the pressure vessel are as follows:

1. Pressure range from sub or at least atmospheric to approximately 2000 psia.
2. Provision for ignition of the propellant inside the pressure vessel.
3. Optical windows appropriate to both photography and auxiliary lighting requirements, e.g. an oblique or normal view of the burning surface itself must be provided rather than merely a profile view.

In order to eliminate the need for applying a restrictive coating to the propellant sides which would obscure the view of the burning surface, a continuously purging, chimney-type propellant strand combustion bomb was selected for this investigation (see Figures 1 and 2).

The combustion bomb used is a modification of an existent propellant strand burning bomb equipped with slot windows in an axial direction. Primary modification of the bomb was in providing an inner chimney, thus allowing more uniform gas flow past the burning propellant and assuring ease in cleaning optical surfaces open to possible soiling by combustion products. The slot windows provide a range of directions from which to supply auxiliary photographic lighting to the strand surface. However, because of the thick windows required for high pressure containment, attempts to view the strand via an optical path oblique to the window surfaces suffer from excessive distortion in photographic image quality (particularly considering the high level of resolution desired in the present study). Consequently, a technique for igniting the propellant strand was developed which causes the propellant surface to burn at an angle to the bomb windows and to the optical axis of the photographic apparatus. Since the burning surface tends to direct itself, during the combustion process, toward a plane normal to the axis of the strands, the surface must be viewed shortly after ignition (long enough after ignition, however, to assure negligible time variation in the shape of the burning surface).

The optical system shown in Figure 3 was assembled for use in conjunction with the optical combustion bomb. The two-lens configuration is aimed at keeping total system length to a

convenient minimum. This optical system has been utilized in further attempts at high resolution photomicrography of propellant strand burning. The system is simple, obviating problems in component alignment, internal absorption and reflection of light and component availability. It provides a range of magnifications up to approximately 15 times with optical components operating near their design conditions, an important point in minimizing optical aberration.

Factors of primary concern in the design of this photographic optical system were: minimum distance of approach allowed by the optical bomb, light-gathering power (determining exposure requirements), depth of field, and resolution. Related to light-gathering power for photography of burning strands is the question of the balance between flame emission and photographic illumination provided by an artificial source. Since a view of the burning propellant surface is desired (necessitating a view through the flame), it is necessary that the photographic effect of flame emission be considerably less than that of light from an artificial source reflected from the burning surface.

Preliminary photographic work at 5 times magnification showed an effective f number of approximately 110 to be satisfactory in suppressing flame emission effects. The system shown in Figure 3 allows a minimum effective f number of 80 with possibility for increase by decreasing lens apertures.

Depth of field in any high magnification system may be expected to be small, but must, for the purposes of this investigation, be large enough to allow resolution of a field including at least several oxidizer particles and characterizing the burning surface in general (at least 50 to 100 μ considering characteristically high propellant oxidizer loadings and small particles of 5 to 10 μ dimension). Depth of field for the simple configuration considered here may be expressed by the following relation (for lens 1 acting as an aperture stop):

$$D = 2 \frac{x}{\lambda} \frac{d}{M}$$

where x = lens 1-to-object distance; D = depth of field; d = allowable circle of confusion (diam.); λ = lens 1 aperture radius; and M = total system magnification. Results of calculations for the system described here are as follows (assuming 50 μ circle of confusion):

M (on film)	D (μ)
5 x	220
7 x	160
9 x	125
11 x	100
13 x	86
15 x	75

The resolving power of an optical system (in which optical component quality is not the determining factor) is limited by diffractive effects. The minimum separation of two points which will be resolved by an optical system can be approximately described by:

$$S = 0.61 \frac{\lambda}{n \sin \theta}$$

with: S = minimum resolved separation of point light sources
λ = wave length of light
n = refractive index of medium

On this basis, it is seen that, for the system under consideration, diffraction limits on resolution should not be serious, since typically:

$$S = 0.61 \frac{0.3\mu}{1.00\ (0.10)} \cong 2\mu$$

The problem of choosing a light source to supply the necessary level of illumination to the strand surface allowing photographs of the burning surface to be taken through the propellant flame is currently under consideration. Major concerns are the high levels of illumination required to render flame emission negligible and the short exposure times required to stop motion of the burning surface. Preliminary photographic results indicate a required luminous flux level (from the artificial source) of approximately 7/lumens/cm^2/exposure at the strand surface. For a propellant burning rate (at high pressures) of approximately one inch per second, calculations show that exposures on the order of 100 μ sec. are necessary to effectively stop motion of the burning surface (at magnifications on the order of 10 x). These light source requirements are not difficult to meet for single-frame microphotography (suitable commercial single strobe flash units are available). However, since any strobing cinematographic light source would necessarily be usable also as a single flash source, acquisition of a light source restricted to single flashes has been temporarily post-

since any strobing cinematographic light source would necessarily be usable also as a single flash source, acquisition of a light source restricted to single flashes has been temporarily postponed pending further investigation of appropriate multi-flash or strobing light sources.

The use of a photographic light source even for low magnification photography is restricted by the high radiant flux input required. (This fact has not been given appropriate consideration in some of the previous photographic investigations of propellant burning). As mentioned above, a luminous flux on the order of 7/lumens/cm^2/exposure is required for photomicrography with low speed, high resolution films. At a typical light source color temperature of 6500° K, this flux results in radiant energy absorption by the propellant surface (assuming a propellant surface emissivity near unity) of approximately 0.02 cal/cm^2/exposure. A simple criterion for judging the effect of this flux on propellant combustion is its quasi-steady effect on surface temperature. Roughly:

$$r \rho c \Delta T_s = E n$$

where: r = propellant burning rate
ρ = propellant density
c = propellant specific ht.
ΔT_s = quasi-steady change in propellant surface temp. due to radiant energy input
E = energy input/exposure
n = exposures/sec.

Considering the following typical values:

r = 0.10 cm/sec
ρ = 1.6 gm/cm^3
c = 0.4 cal/gm-°C
E = 0.02 cal/gm^2/exposure

Such that: $$n = 3.2 \, (\Delta T_s \, {}^\circ K)$$

This indicates that for negligible effects on combustion, say:

$$\Delta T_s \leq 100^\circ \text{ K (high)}$$

n must be limited to approximately 320 exposures/sec. Thus, the value of high speed photography is limited by the maximum number of frames which may be exposed before the necessarily high artificial light flux seriously alters the combustion process. This limit may, of course, be extended by use of higher speed film and/or lower magnifications, but only at the expense of considerably decreased resolving power.

To date, progress in developing the photo-optical system--optical bomb combination has included testing resolution of the optical system using a microscope reticle (with 10 graduations). The reticle (tilted at a 45° angle to the optical axis resulting in 7 μ graduation line separation) was photographed on Kodak Panatomic X film, and results indicated 7 μ line resolution at magnifications above 10 times with depths of field approximately as calculated (see above). Currently in progress is an effort to photograph propellant strands burning in the optical combustion bomb. Some photographs have been taken at 6 times magnification utilizing a 1 msec electronic flash tube as a light source and with the propellant burning at atmospheric pressure. Extension of system capability to higher pressures awaits acquisition of an appropriate short duration, high-intensity light source.

For the immediate future, efforts at high resolution photomicrography of burning propellant strands will involve conincident development of single-frame photographic technique and further investigation of suitable light sources for micro-cinematography.

III. THERMOCOUPLE TRAVERSES OF THE FLAME ZONE

The development of an experimental means for determining temperature profiles in burning composite solid propellants based on techniques described in the preceding quarterly progress report is nearly complete. As reported earlier, platinum-platinum 10%-rhodium thermocouples of small diameter have been successfully cast in composite propellant strands, and recent work has been primarily directed at developing suitable instrumentation for recording temperatures as these are burned.

The experimental apparatus for burning thermocouple-equipped strands under controlled pressure environment and the instrumentation for thermocouple output recording are shown in Figure 4. Since burning rate data are necessary for conversion of the temperature vs. time output of the apparatus to the desired temperature vs. position relations characterizing the propellant burning, the strand burner is equipped with appropriate circuitry for measuring the burning rate of whatever propellant might be used.

For the purpose of instrumentation development, thermocouples using 0.5 mil wire were used. When the recording technique has been worked out, finer thermocouples (for which fabrication techniques have already been developed, as described in the last quarterly report) will be used.

The first stages of instrumentation development were carried out using strands burning in an atmospheric burner which allowed visual observation (with auxiliary magnification) of the burning propellant surface. This early work in recording thermocouple output vs. time was carried out with data read-out by photographs of oscilloscope traces triggered by a slight rise in the output of the thermocouple as the burning surface of the strand approached it. Thermocouple output recorded by this technique frequently indicated breakage of the thermocouple leads before an appreciable increase in thermocouple bead temperature. Additionally, visual observations also indicated that portions of the thermocouple other than the bead frequently emerged first from the burning surface (apparently due to shifting of the thermocouple during casting). This problem was alleviated by using extreme care during casting, but in the future (for actual data measurement) thermocouple assemblies using protective ceramic tubes over the thermocouple leads will probably be used. This arrangement will allow the thermocouple to be located more easily at a specified position in the strand and will also decrease the possibility of thermocouple breakage during casting.

The next phase of instrumentation development was aimed at obtaining a more complete profile with better resolution of the amplitude of the thermocouple output signal. The thermocouple output was recorded on a Honeywell Visicorder Model 906B oscillograph. This device was triggered by a signal from a fuse wire which had been case in the propellant strand approximately 2 millimeters before the thermocouple bead. Amplification of the thermocouple signal fed into the recorder was so adjusted that the temperature profiles would extend over the full scale (5 inches compared with 6 centimeters for the full scale oscilloscope deflection previously employed). Temperature histories of the thermocouple beads from a time well before appreciable thermocouple temperature rise to the time when the thermocouple itself fused in the high temperature flame zone were obtained. One inch represented approximately 400° centigrade on the recorder output. The amplifier-recorder combination was calibrated by the input of known voltage from a Leed & Northrup and NBS Circular 561 tables were used to convert the recorder millivoltages to temperatures.

Since temperature profile data taken during development of the above apparatus are not likely to be accurate (primarily due to the large thermocouple sizes as mentioned above), they are not included in this report, but the measured profiles were roughly as expected. Additionally, some evidence of discontinuity in profile was apparent at temperatures near that expected for the burning surface.

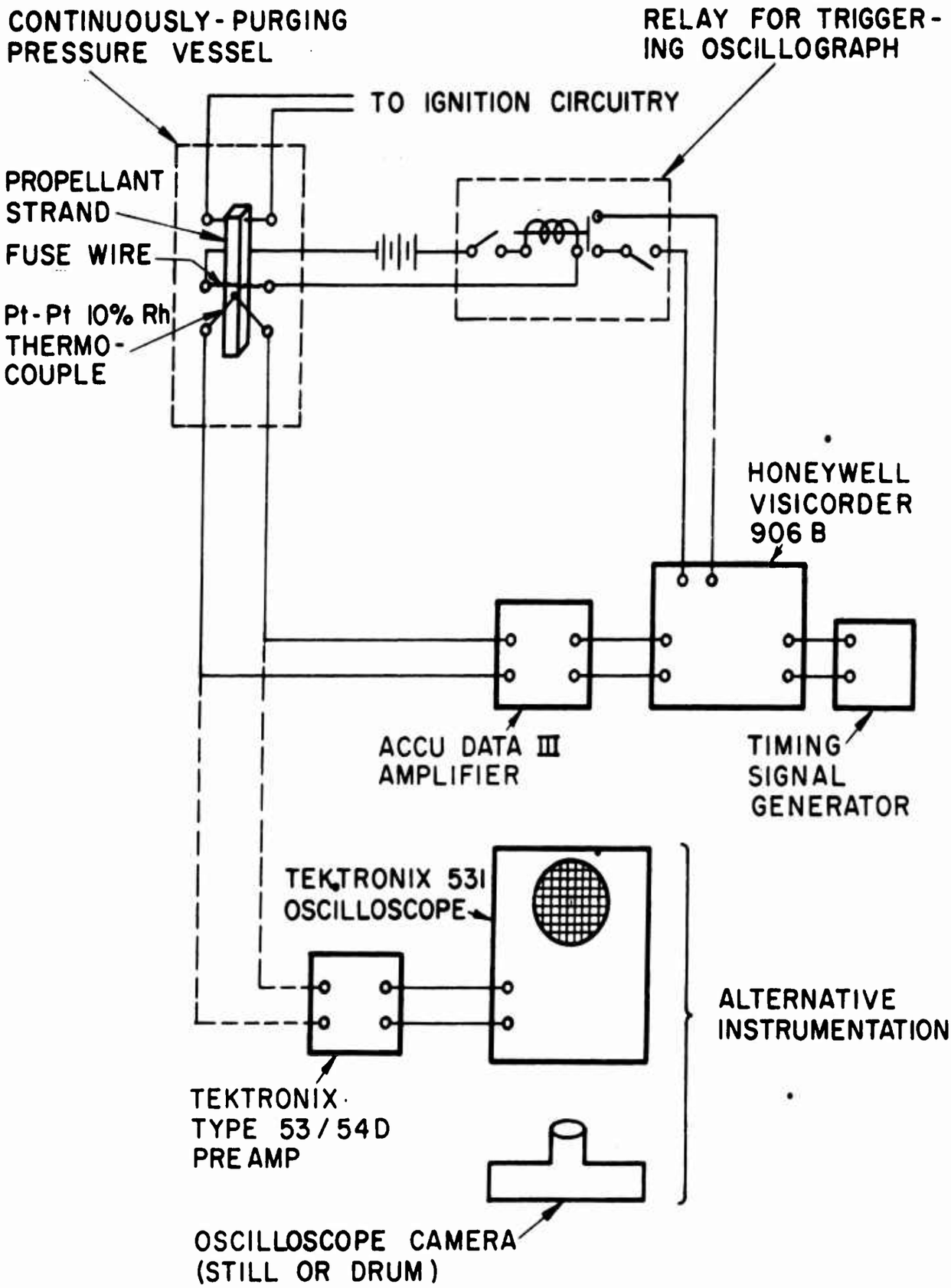

JPR 1375

SCHEMATIC DIAGRAM OF APPARATUS AND INSTRUMENTATION FOR THERMOCOUPLE TRAVERSES OF SOLID PROPELLANT FLAME ZONES

FIGURE 1

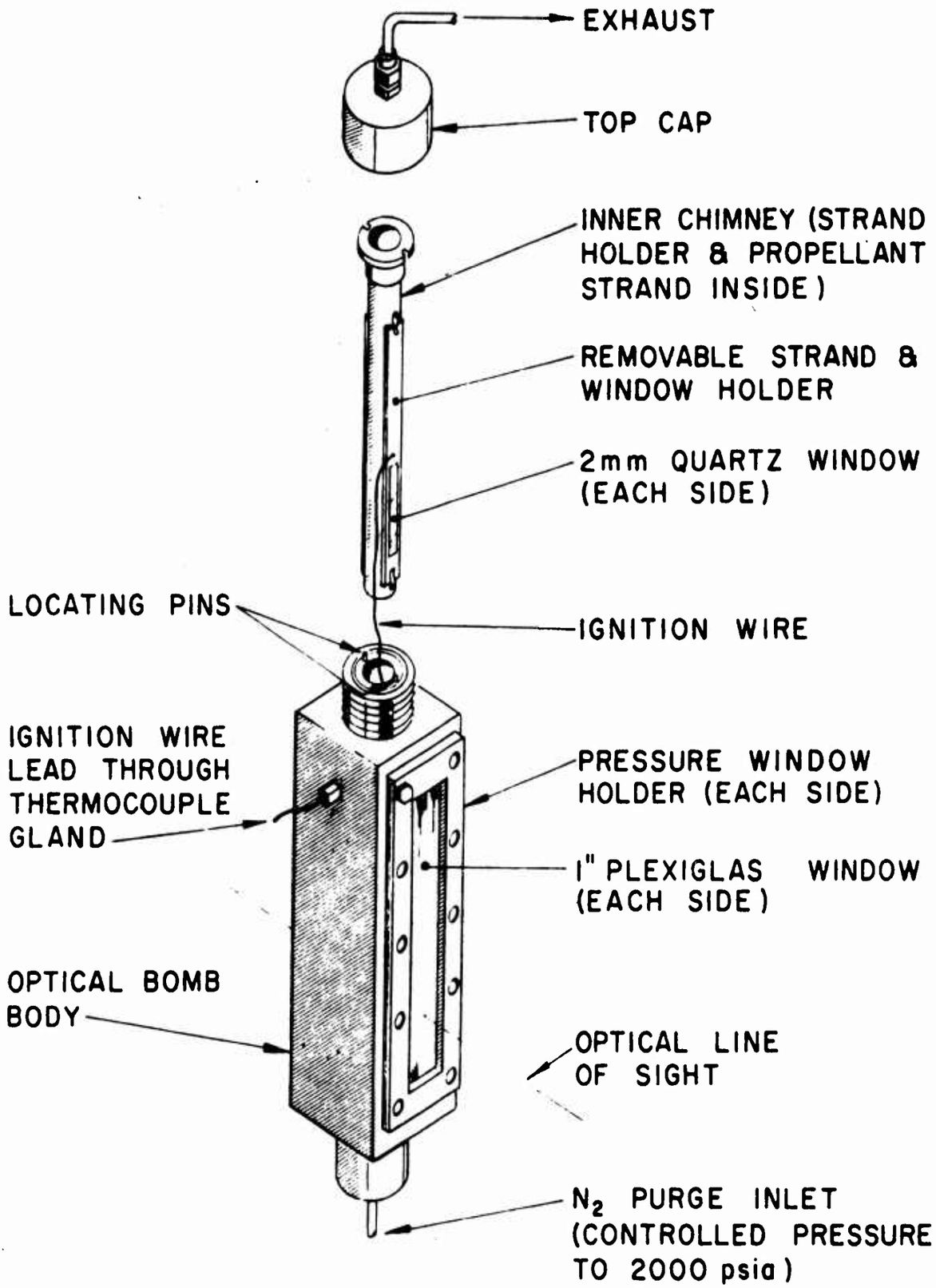

JPR 1376

OPTICAL BOMB FOR PHOTOGRAPHY OF BURNING SOLID PROPELLANT STRANDS

FIGURE 2

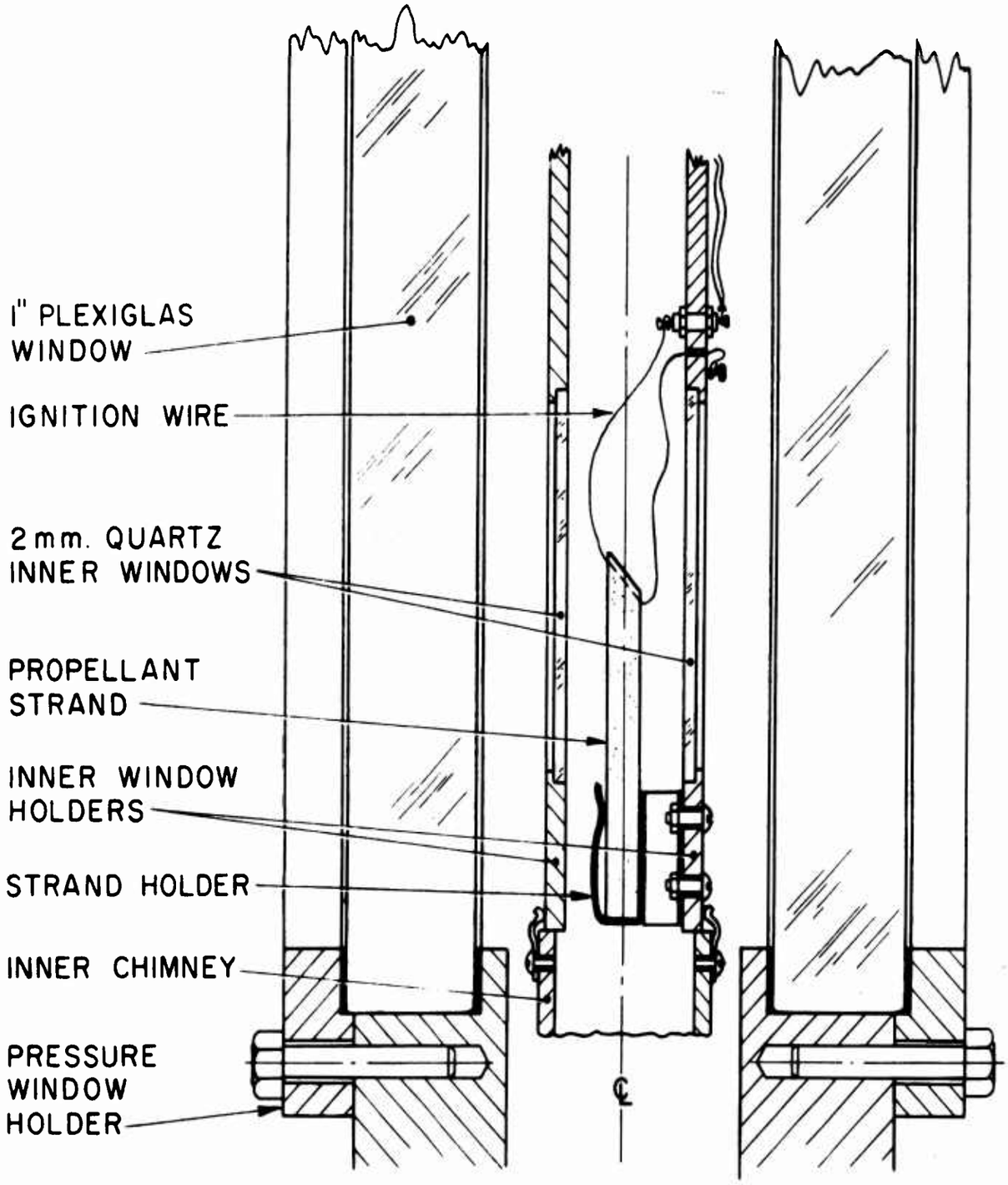

DETAIL CROSSECTION OF STRAND LOCATION IN OPTICAL BOMB

JPR 1377

FIGURE 3

JPR 1378

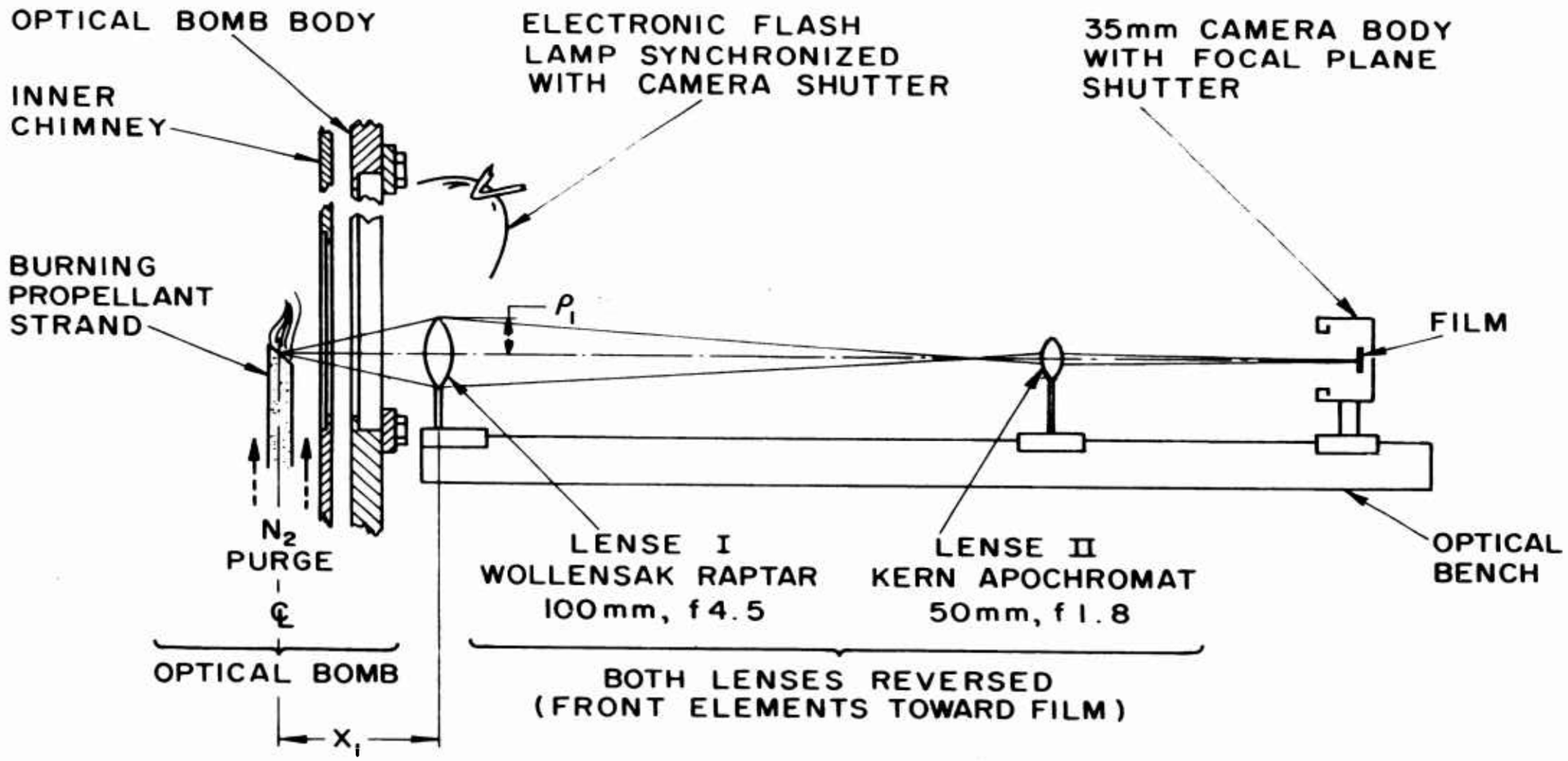

FIGURE 4

OPTICAL SYSTEM FOR PHOTOGRAPHY
OF BURNING SOLID PROPELLANT STRANDS

UNCLASSIFIED

UNCLASSIFIED