UNCLASSIFIED

AD 295 747

Reproduced
by the

ARMED SERVICES TECHNICAL INFORMATION AGENCY
ARLINGTON HALL STATION
ARLINGTON 12, VIRGINIA

UNCLASSIFIED

NOTICE: When government or other drawings, specifications or other data are used for any purpose other than in connection with a definitely related government procurement operation, the U. S. Government thereby incurs no responsibility, nor any obligation whatsoever; and the fact that the Government may have formulated, furnished, or in any way supplied the said drawings, specifications, or other data is not to be regarded by implication or otherwise as in any manner licensing the holder or any other person or corporation, or conveying any rights or permission to manufacture, use or sell any patented invention that may in any way be related thereto.

63-2-3

CATALOGED BY ASTIA
AS AD No. 295747
295 747

HUGHES
RESEARCH LABORATORIES

A SOLID STATE POCKET RADIATION DETECTION SYSTEM

Final Report DA-49-193-MD-2194

1 September 1961 through
30 November 1962

Norman A. Baily and Frederick W. Cleary

ASTIA
FEB 8 1963
TISIA

Qualified requestors may obtain
copies of this report from ASTIA

HUGHES RESEARCH LABORATORIES
Malibu, California

a division of hughes aircraft company

A SOLID STATE POCKET RADIATION DETECTION SYSTEM

Final Report
DA-49-193-MD-2194

1 September 1961 through 30 November 1962

Norman A. Baily and Frederick W. Cleary

TABLE OF CONTENTS

List of Illustrations iii

Abstract iv

Introduction 1

Discussion 2

Design 3

Electronic Components 11

Fabrication Procedure 18

Material Preparation 18

Lithium Evaporation and Diffusion 18

Detector Assembly 19

Operational Characteristics 20

Instructions for Use 23

General Precautions 23

Operating Procedure 23

References 25

LIST OF ILLUSTRATIONS

Fig. 1. Picture of top surface 4

Fig. 2. Picture of electronic assembly 5

Fig. 3. Picture of rear surface 6

Fig. 4. Picture of wound probe 7

Fig. 5. Schematic diagram for radiation detector 8

ABSTRACT

1. Preparing Institution: Hughes Research Laboratories, Malibu, California.

2. Title of Report: A Solid State Pocket Radiation Detection System.

3. Principal Investigator: Norman A. Baily.

4. Number of Pages, Illustrations, and Date: 25 pages, 5 illustrations, 30 November 1962.

5. Contract Number: DA-49-193-MD-2194.

6. Supported by: U.S. Army Medical Research and Development Command
Department of the Army
Washington 25, D.C.

A pocket-size radiac instrument has been designed to operate with silicon p-i-n junction detectors. These detectors are sensitive to both x or gamma radiation and also to charged particles including alpha particles. The electronic system can read out counting rates in the range of zero to 10^5 counts/min in four linear decades. A large, flat detector is mounted into the back surface of the case. A plug-in probe using a cylindrical detector is furnished for possible insertion into small volumes in the body or in open wounds. Both detectors are protected by a silicon monoxide coating. Discrimination between pulses due to alpha or other heavily ionizing particles and those due to photons or betas is provided. The unit, therefore, combines two separate sensitive volumes: (1) A large area detector (approximately 6 cm^2), which can detect very low levels of radioactivity. This detector will allow a monitor to scan the surface and clothing of persons suspected of radioactive contamination. (2) A probe, which is 3 mm in diameter at the tip and 3 feet in length, which plugs into a receptacle on the top of the case, and is designed so that it can be sterilized and therefore can be inserted directly into an open wound. Absolute sensitivity over that reported can be increased if discrimination between heavily ionizing particles and photon radiation is eliminated.

NOTE: Copies of this report are filed with the Armed Services Technical Information Agency, Arlington Hall Station, Arlington 12, Virginia, and may be obtained from that agency by qualified investigators working under Government contract.

INTRODUCTION

The work performed under this contract was undertaken to study the feasibility of producing a pocket-size radiation detector for medical field use which would respond to alpha as well as beta and gamma rays. An instrument which meets this requirement and should perform satisfactorily in the field for determining contamination of wounded personnel has been fabricated.

DISCUSSION

For the determination of low level radioactivity and internal contamination, as in the case of wounded personnel, it is necessary to place the radiation sensing device in contact with or near the contaminated area. To permit internal radiation examination a small, flexible radiation probe is required.

A solid state junction detector has been constructed small enough to be used as a miniature wound probe sensitive to alpha, beta, and gamma radiation. The small sensitive volume of the miniature detector will give a usable count rate when exposed to low radiation levels.

The wound contamination probe assembly consists of a cylindrical junction detector 3 mm x 10 mm sealed in a 5 mm x 1 meter catheter-type tubing. The materials and construction of the probe assembly permit chemical sterilization of that section of tubing normally in contact with the patient. The outside surface of the cylindrical detector has had a deposition of silicon monoxide thin enough to permit passage of low energy alpha radiation. A shielded cable inside the tubing connects the detector via an end plug to the instrument package.

To make the radiation monitor a truly versatile unit, a large area (approximately 6 cm^2) surface contamination detector has been mounted inside the instrument package. This detector has characteristics similar to the small cylindrical unit but, because of its larger sensitive volume, will give usable counting rates when exposed to a much lower level of activity. This detector has been made light insensitive and, in addition, has a retractable cover to protect the sensitive surface when not in use or when used for photon detection. The large area surface detector is usable for normal surveying. The external portions of both detectors are maintained at ground potential.

The surface detector is normally in an operating position. Insertion of the wound probe plug into the jack on the instrument case disconnects the surface detector and activates the wound probe.

DESIGN

The radiation detectors have been combined with electronic circuitry to permit the measurement of radiation activity covering the range of 0 to 100,000 counts/min in four linear decades. The activities corresponding to these count rates are given in a later section.

The system design objective was to achieve as compact a unit as possible and be consistent with long term stability and reasonable battery life. The operating voltages of the solid state detectors and the source impedances involved permit an efficient unit in a compact instrument using transistorized circuitry associated with subminiature components. The overall dimension of the instrument package including battery and indicating meter are 4 inches long by 3 inches wide by 1-1/4 inches deep, giving a volume of 15 cubic inches and a packaging density of 500,000 components per cubic foot. A top view is shown in Fig. 1. This package density was achieved by using semiconductors in TO-18 cans, 1/10 watt resistors, etc., and by packaging these components in a three-dimensional, stacked vertical array. The actual layout is given in Fig. 2. Standard semiconductors and components were used to permit repair of the instrument electronics. The rear surface showing the large area junction detector is shown in Fig. 3. A picture of the wound probe is shown in Fig. 4.

The electrical components are mounted on a 1/32-inch-thick, gold-plated thru hole etched circuit board. The case assembly is designed to permit access to the circuit board for adjustments or repairs.

The electronics were designed following standard semiconductor techniques in the development of the charge-sensitive amplifier and the negative feedback complementary pair transistor pulse amplifiers. A schematic diagram is shown in Fig. 5.

The output signal from the junction detector is proportional to the reciprocal of the detector capacity. To permit fixed discriminator settings, it is desired to have similar pulse amplitudes from either the small probe detector or the larger surface detector. The charge-sensitive amplifier configuration used eliminates these variations. The amplifier has an output given by

$$V_{out} = \frac{Q}{C_d} \cdot G \cdot \frac{C_d}{C_d(1 + G)C_f}$$

$$= \frac{Q}{C_f} \cdot \frac{1}{(1+\frac{1}{G}) + \frac{C_d}{C_f} G}$$

M 2302

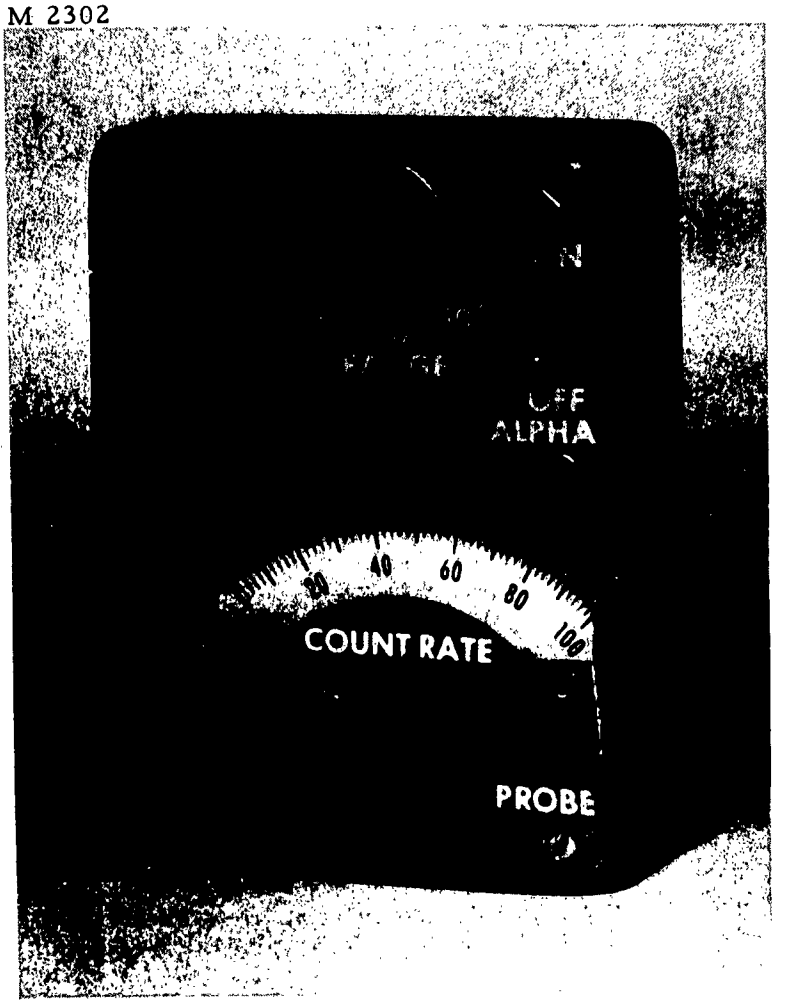

Fig. 1. Picture of top surface.

M 2332

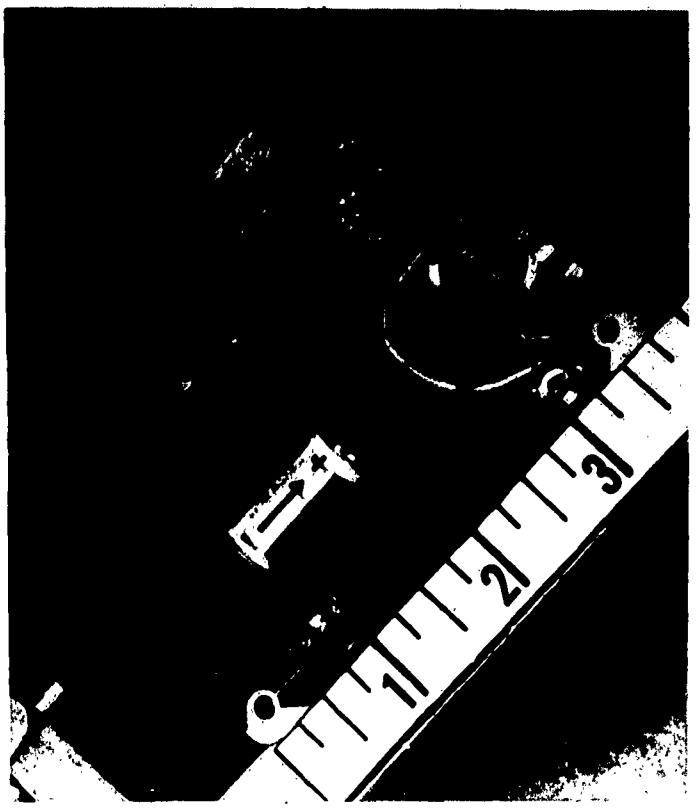

Fig. 2. Picture of electronic assembly.

M 2331

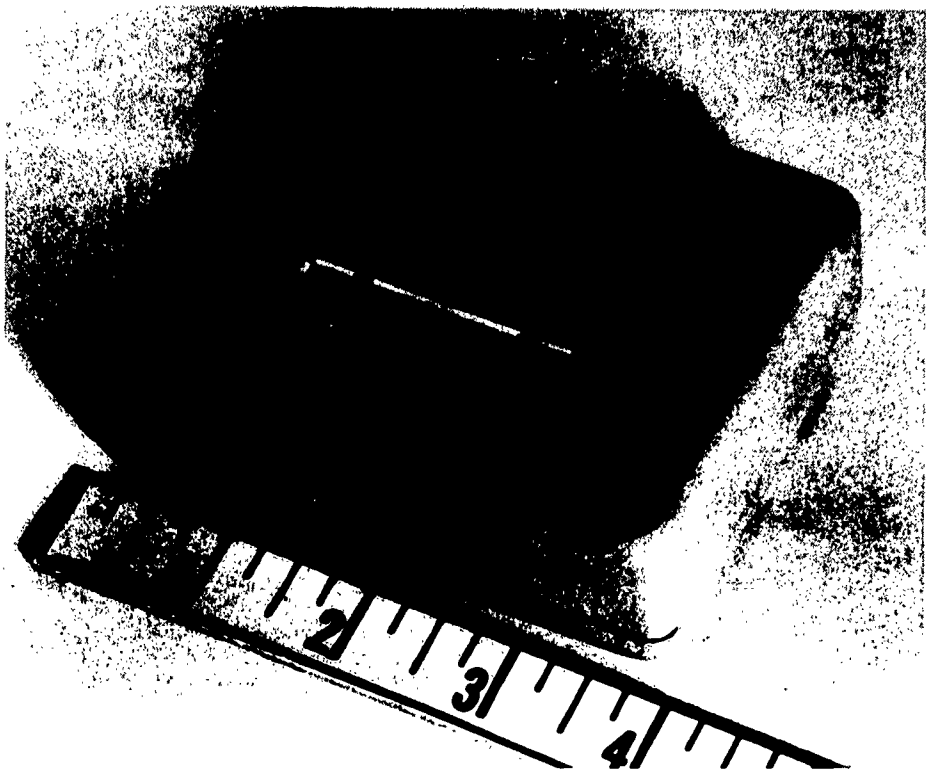

Fig. 3. Picture of rear surface.

M 2309

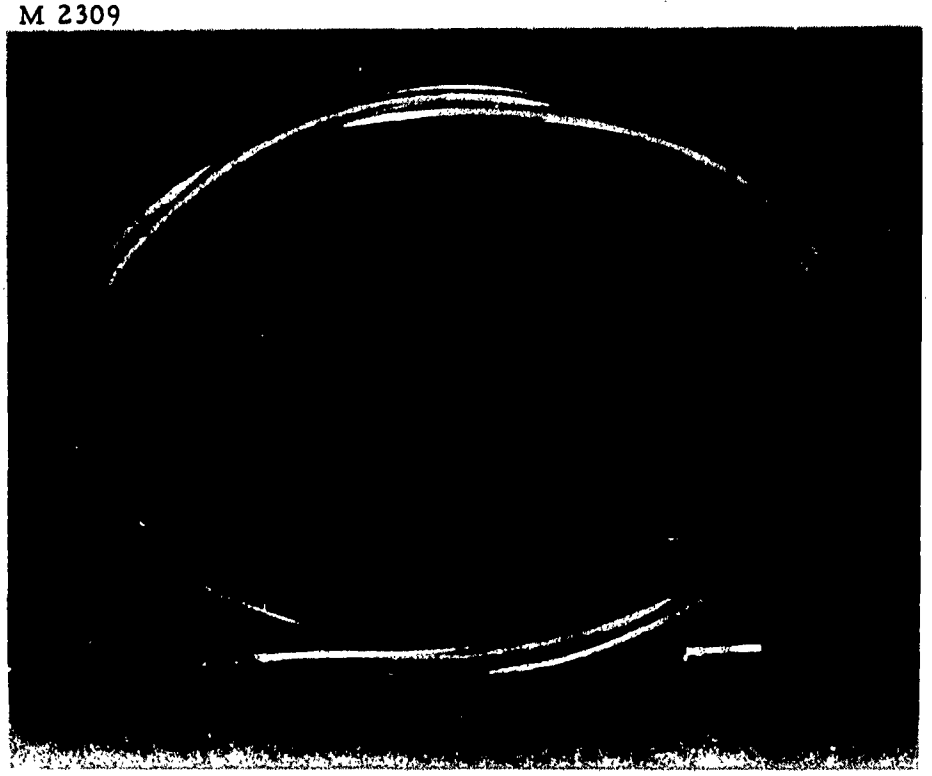

Fig. 4. Picture of wound probe.

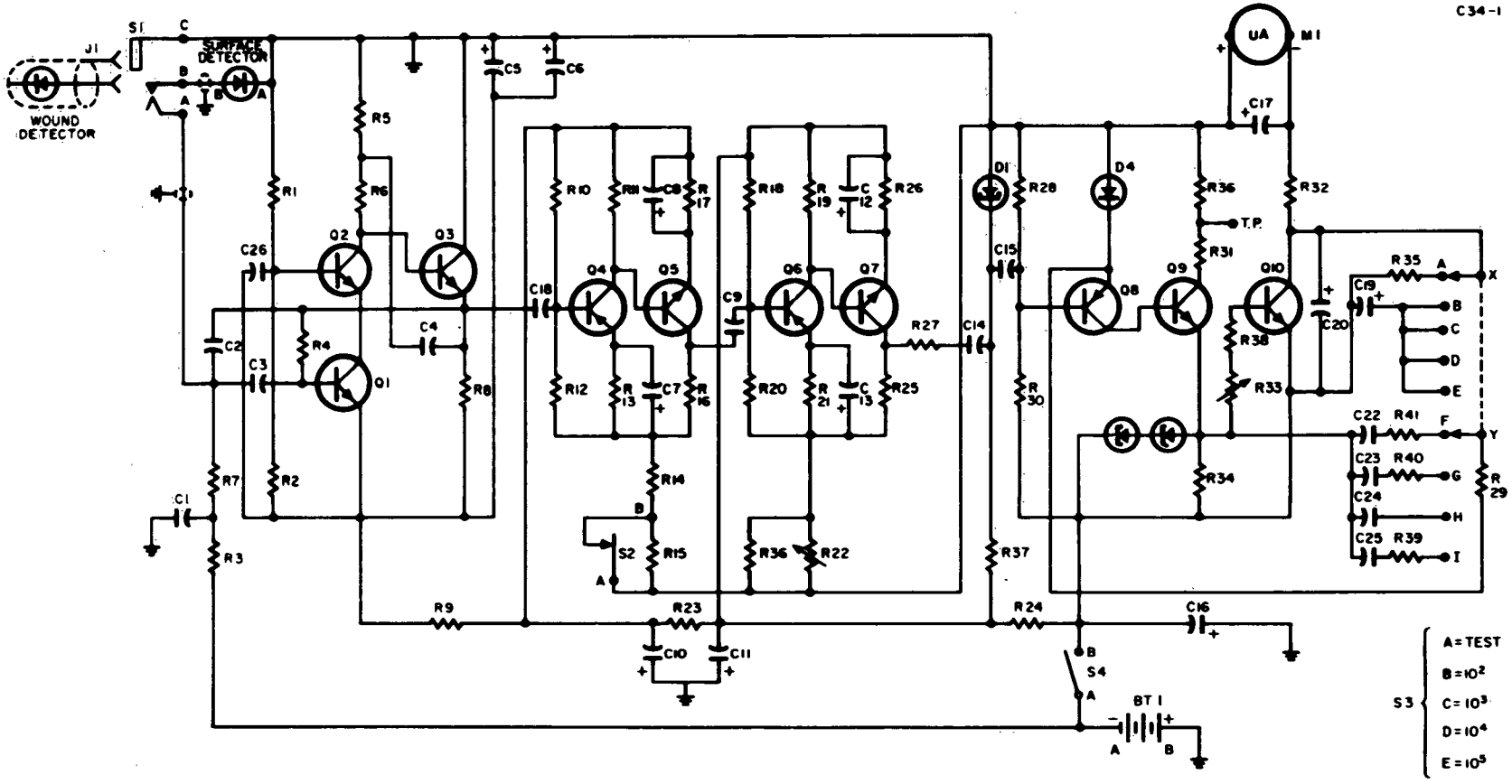

Fig. 5. Schematic diagram for radiation detector.

where C_d is the detector capacity, C_f the feedback capacity, G open loop gain, and Q the charge liberated by the detector.

If the open loop gain and feedback are sufficiently large, the output is closely

$$V_{out} = \frac{Q}{C_f}\left(1 - \frac{C_d}{C_f G}\right)$$

for $G = 500$, $C_f = 5$, and $C_d = 2$ (probe) and 100 (surface).

To find unit voltage for unit charge, Q, we have

$$(1) \qquad V = \frac{1}{2}\left(1 - \frac{2}{2 \times 500}\right)$$

$$V = \frac{1}{2}(1 - 0.002)$$

$$V = 0.499$$

$$(2) \qquad V = \frac{1}{2}\left(1 - \frac{100}{2 \times 500}\right)$$

$$V = \frac{1}{2}(1 - 0.1)$$

$$V = 0.45 \quad .$$

Thus, application of the charge-sensitive amplifier has degenerated a 50 to 1 pulse voltage ratio to a 1.1:1 ratio, which is easily handled by the fixed discriminator threshold.[1]

An RC clipping coupler is used between the input amplifier section and the following pulse amplifier to control system bandwidth for optimum signal-to-noise ratio. The use of the complementary pair pulse amplifiers permits biasing for low collector currents and at the same time extends the dynamic range at the low battery voltage used. Negative feedback is used around each transistor pair to stabilize circuit gain as needed for pulse height discrimination.

The pulse amplifiers provide the gain to drive the tunnel diode discriminator, D_1. The pulse amplifier gain is selected by S_2 permitting the fixed discriminator operating level to discriminate against noise, and at the same time to separate the higher amplitude pulses due to alpha particles from those due to beta or gamma rays.

The output of the discriminator is differentiated to provide a short duration constant amplitude voltage pulse to trigger the monostable transistor pair, Q_8 - Q_9.

The monostable multivibrator develops a constant amplitude pulse whose duration depends on the circuit time constants, selected by the count rate decade switch, S_3. The tunnel diodes, D_2 and D_3, aid in obtaining a constant amplitude drive for the rate-indicating circuit.

When driven by a positive going pulse from the multivibrator transistor switch, Q_{10} discharges the shunting capacitor to give a mean current indication on meter M1 that is proportional to input pulse rate.

ELECTRONIC COMPONENTS

Table I contains a complete electronic parts list for the prototype radiation detector. This list includes the component or part number, identification, value or type, and manufacturer. All Components were selected with maximum reliability and smallest size in mind.

TABLE I

Parts list for radiation detector.

Component or Part	Identification	Value or Type	Manufacturer and Address
Q1,Q2,Q3, Q5,Q7,Q9, Q10	Transistor, Silicon, NPN, Epitaxial Meas, TO-18 Can	2N753	Motorola Semiconductors Phoenix, Arizona
Q4,Q6,Q8	Transistor, Germanium, PNP MADT, TO-18 Can	2N769	Philco Semiconductor Lansdale, Pennsylvania
D1, D2, D3	Diode, Tunnel, Silicon, TO-18 Can	HT-48	Hoffman Electronics Los Angeles 12, California
D4	Diode, Germanium	1N198	Hughes Semiconductor Div. Newport Beach, California
C1,C6,C10, C11,C16,C20	Capacitor, Tantalum, No. 62F101-G2 10 v, -15 + 20%	10 mfd	General Electric Company Irmo, South Carolina
C7,C8,C12, C13,C21	Capacitor, Tantalum, No. 62F104-G2, 30 v, -15 + 20%	5 mfd	General Electric Company Irmo, South Carolina
C17,C19	Capacitor, Tantalum, No. 62F303-G2, 20 v, -15 + 20%	50 mfd	General Electric Company Irmo, South Carolina
C5	Capacitor, Tantalum, No. 62F501, 50 v, -15 + 50%	0.1 mfd	General Electric Company Irmo, South Carolina
C2	Capacitor, Ceramic, No. K2R5ROM, ± 20%	5 mmfd	King Electronics Pasadena, California
C15	Capacitor, Ceramic, No. K2R560, ± 10%	56 mmfd	King Electronics Pasadena, California

Table I (continued) -- Parts list for radiation detector.

Component or Part	Identification	Value or Type	Manufacturer and Address
C18	Capacitor, Ceramic, No. K2R220K, 200 vdc, ± 10%	22 mmfd	King Electronics Pasadena, California
C25	Capacitor, Ceramic, No. K2R331, ± 10%	330 mmfd	King Electronics Pasadena, California
C22	Capacitor, Paper, Epicon, No. M1-504D, 100 vdc, ± 20%	0.5 mfd	Electron Products Pasadena, California
C3, C4, C9, C14	Capacitor, Ceramic, Disc, No. TH-S10	0.01 mfd	Sprague Electric North Adams, Mass.
C23	Capacitor, Ceramic, Disc, No. TH-S50, 200 v	0.05 mfd	Sprague Electric North Adams, Mass.
C24	Capacitor, Ceramic, Disc, No. TH-D50, 100 v	0.005 mfd	Sprague Electric North Adams, Mass.
C26	Capacitor, Tantalum, No. 160D20, 8v, ± 10%	2 mfd	Sprague Electric North Adams, Mass.
R1	Resistor, Fixed Composition, Type TR, 1/10 watt, 150 v, ± 5%	36 K	Allen-Bradley Milwaukee, Wisconsin
R2	Resistor, Fixed Composition, Type TR, 1/10 watt, 150 v, ± 5%	20 K	Allen-Bradley Milwaukee, Wisconsin
R3, R17, R23	Resistor, Fixed Composition, Type TR, 1/10 watt, 150 v, ± 5%	10 K	Allen-Bradley Milwaukee, Wisconsin
R4	Resistor, Fixed Composition, Type TR, 1/10 watt, 150 v, ± 5%	940 K	Allen-Bradley Milwaukee, W sconsin

Table I (continued) -- Parts list for radiation detector.

Component or Part	Identification	Value or Type	Manufacturer and Address
R5, R6, R12, R13, R16, R20, R21	Resistor, Fixed Composition, Type TR, 1/10 watt, 150 v ± 5%	12 K	Allen-Bradley Milwaukee, Wisconsin
R10	Resistor, Fixed Composition, Type TR, 1/10 watt, 150 v, ± 5%	30 K	Allen-Bradley Milwaukee, Wisconsin
R7, R18	Resistor, Fixed Composition, Type TR, 1/10 watt, 150 v, ± 5%	100 K	Allen-Bradley Milwaukee, Wisconsin
R9, R23, R24, R36, R41	Resistor, Fixed Composition, Type TR, 1/10 watt, 150 v, ± 5%	470 Ω	Allen-Bradley Milwaukee, Wisconsin
R11	Resistor, Fixed Composition, Type TR, 1/10 watt, 150 v, ± 5%	18 K	Allen-Bradley Milwaukee, Wisconsin
R14	Resistor, Fixed Composition, Type TR, 1/10 watt, 150 v, ± 5%	4.7 K	Allen-Bradley Milwaukee, Wisconsin
R15	Resistor, Fixed Composition, Type TR, 1/10 watt, 150 v, ± 5%	6.8 K	Allen-Bradley Milwaukee, Wisconsin
R18	Resistor, Fixed Composition, Type TR, 1/10 watt, 150 v, ± 5%	47 K	Allen-Bradley Milwaukee, Wisconsin
R19	Resistor, Fixed Composition, Type TR, 1/10 watt, 150 v, ± 5%	15 K	Allen-Bradley Milwaukee, Wisconsin
R25	Resistor, Fixed Composition, Type TR, 1/10 watt, 150 v, ± 5%	4.7 K	Allen-Bradley Milwaukee, Wisconsin

Table I (continued) -- Parts list for radiation detector.

Component or Part	Identification	Value or Type	Manufacturer and Address
R26, R31, R34, R38	Resistor, Fixed Composition, Type TR, 1/10 watt, 150 v, ± 5%	1 K	Allen-Bradley Milwaukee, Wisconsin
R27	Resistor, Fixed Composition, Type TR, 1/10 watt, 150 v, ± 5%	510 Ω	Allen-Bradley Milwaukee, Wisconsin
R37, R32	Resistor, Fixed Composition, Type TR, 1/10 watt, 150 v, ± 5%	22 K	Allen-Bradley Milwaukee, Wisconsin
R29	Resistor, Fixed Composition, Type TR, 1/10 watt, 150 v, ± 5%	1.6 K	Allen-Bradley Milwaukee, Wisconsin
R30	Resistor, Fixed Composition, Type TR, 1/10 watt, 150 v, ± 5%	1 megohm	Allen-Bradley Milwaukee, Wisconsin
R35	Resistor, Fixed Composition, Type TR, 1/10 watt, 150 v, ± 5%	40 K	Allen-Bradley Milwaukee, Wisconsin
R36, R41	Resistor, Fixed Composition, Type TR, 1/10 watt, 150 v, ± 5%	300 Ω	Allen-Bradley Milwaukee, Wisconsin
R39	Resistor, Fixed Composition, Type TR, 1/10 watt, 150 v, ± 5%	1.3 K	Allen-Bradley Milwaukee, Wisconsin
R40	Resistor, Fixed Composition, Type TR, 1/10 watt, 150 v, ± 5%	470 Ω	Allen-Bradley Milwaukee, Wisconsin
R22, R33	Potentiometer, Trimpot, Model 3280, No. 3280W-1-102	0 to 1 K	Bourns, Inc. Riverside, California

Table I (continued) -- Parts list for radiation detector.

Component or Part	Identification	Value or Type	Manufacturer and Address
M1	Meter Movement, DC Microammeter, Model 1227C, No. 4296, 2-1/2" Case Style	0 to 100 ma	Simpson Electric Chicago, Illinois
B1	Battery, Mercury, No. TR-175	7 volts	Mallory Battery Company North Terrytown, N. Y.
J1	Plug, Micro-Plug, Type 850		Switchcraft Chicago, Illinois
S1	Jack, Micro-Jax, No. TR-2A		Switchcraft Chicago, Illinois
S2	Switch, Sub-Miniature, No. 30-2, SPST, NC, Push Button		Grayhill La Grange, Illinois
S3	Switch, Sub-Miniature, No. 28-GM-5, 2 Poles, 5 Positions, Rotary Type		Daven Livingston, New Jersey
S4	Switch, Toggle, No. TS-3, SPDT		Allied Control
--	Transipad, DAP, No. A-10042		Milton Ross Company Hatboro, Pennsylvania
--	Terminal, Bifurcated, Sub-Miniature, No. 2000-A2		Useco Van Nuys, California
--	Cover, Deep Drawn Aluminum, No. Z48-64BCF		Zero Manufacturing Co. Burbank, California

Table I (continued) -- Parts list for radiation detector.

Component or Part	Identification	Value or Type	Manufacturer and Address
--	Box, Deep Drawn Aluminum, No. Z48-64B		Zero Manufacturing Co. Burbank, California
--	Epoxy Laminate, Glass-Base, Copper Clad, 1 oz. copper on 2 sides, No. EG-758-T, 0.031" ± 0.003" thick		Mica Corporation Culver City, California

FABRICATION PROCEDURE

Material Preparation

Starting material of 30 ohm-cm DuPont p-type silicon was cut into 5 x 5 x 15 mm bars using a diamond saw. The silicon bars were then ground to 4 mm diameter cylinders using 280c through 600A grit wet-grind abrasive paper.

An etching solution of 4 parts nitric acid (70 percent), 4 parts hydroflouric acid (48 percent), and 5 parts glacial acetic acid was used to take the cylinder diameter down to 3.0 $\pm$ 0.3 mm.

Immediately after this etch, the cylinders were placed in the 1000°C zone of a two-zone phosphorus diffusion furnace. P_2O_5 powder was placed in the pre-heat zone at 300°C and oxygen gas was used to carry the phosphorus over the silicon cylinders. The diffusion time was 30 minutes.

Lithium Evaporation and Diffusion

An evaporating system was prepared with two sets of electrodes for aluminum and lithium evaporation. A rotating chuck was placed in the system at a 30° angle to the electrodes to ensure that the cylinder walls and one end would be coated. A tungsten coil was electrolytically cleaned and loaded with 99.99 percent aluminum wire. The aluminum wire was previously etched in a 5 percent NaOH solution.

A molybdenum boat was electrolytically cleaned and placed in the electrodes. The bell jar was then lowered and the system was flushed with dry nitrogen gas for 5 minutes. During this time, the silicon cylinder was cleaned in 10 percent hydroflouric acid solution and rinsed in deionized water. Lithium metal was cleaned in methyl alcohol to remove the lithium oxide and then rinsed in trichloroethylene. The cylinder was placed in the chuck, the lithium metal was placed in the molybdenum boat and the system was evacuated to a pressure of 10^{-5} mm of mercury.

Lithium metal was evaporated onto the cylinder until light transmission through a monitor glass slide was reduced 95 percent by the evaporated layer. Two thousand angstroms of aluminum were then evaporated over the lithium layer to prevent oxidation of the lithium during the subsequent alloy cycle.

A movable shield was used to cover the sources during the bake-out and melting prior to evaporation to reduce contamination in the evaporated layer.

Cylinder A was diffused 15 minutes at 400°C in a dry nitrogen atmosphere. Cylinder B was diffused 15 minutes at 380°C, also in dry nitrogen. The aluminum layer was removed by etching in 10 percent NaOH solution.

Detector Assembly

In order to remove the phosphorus diffused layer from the p-type contact area, one end of the cylinder was ground using 10-micron aluminum oxide powder. Electroless nickel plating was used to prepare solderable contact areas to the p-type and n-type regions. Pure tin metal was used to attach 2-mil platinum contact wire to the devices.

After masking the detector area with apiezon wax the junction region was etched to reduce the leakage currents prior to the drift operation. The previously mentioned 4:4:5 etch solution was used. A 500-angstrom coat of evaporated silicon monoxide was applied to the junction for stabilization.

The lithium ions were drifted at a temperature of 100°C and under a bias of 200 volts until a compensated region of 0.3 to 0.5 mm was formed.

The drift was performed in a stirred silicone-200 fluid bath to provide temperature stability.

The cylinders were assembled in 3-mm OD polyethylene catheter tubing and sealed using Dow Corning No. 140 encapsulating compound.

The large area detector was fabricated in an identical manner except that a gold-aluminum layer was applied on top of the silicon monoxide. The gold-aluminum layer was added in order to remove sensitivity of the detector to low-energy photons such as those associated with visible light.

OPERATIONAL CHARACTERISTICS

Both sensitive volumes were exposed to the gamma rays of cobalt-60 and to the alpha rays of polonium-210. The gamma-ray energies associated with cobalt-60 are 1.17 Mev and 1.33 Mev. Both are given off with equal frequency, resulting in a value for $I\gamma$ of 13.2 r/hr/mc at 1 cm. The alpha rays associated with the polonium-210 have an energy of 5.3 Mev. The absolute sensitivity of the detectors to the gamma rays of cobalt-60 are given in Tables II and III. The average values for the surface detector and wound probe are 182 and 29.4 counts per minute per milliroentgen per hour.

The absolute sensitivity for these two detectors in response to 5.3-Mev alpha particles is 15.2 and 2.14 counts per minute per disintegration per second. This value is for exposure to an alpha source whose activity was spread over a source area of approximately 3 cm^2. Since the source was not in direct contact with the detector, air absorption was present and, therefore, the energy of the alpha particles reaching the sensitive volume was considerably reduced from 5.3 Mev. Since the source used was considerably smaller than the surface detector used, full efficiency was not realized. From the geometrics of source and detector used and the experimental value given above, it would appear that one can expect an efficiency of about 75 percent. The efficiency of the cylindrical probe, as determined using the same source, is only about 3.3 percent. However, this can be accounted for in terms of the actual area exposed to the source. Using the experimental value and the actual active area of the cylinder, one would expect an equal efficiency if the probe were completely surrounded by an alpha emitter.

Because of the use of non-precision resistors which was made necessary by size considerations and also the desirability of keeping the number of components to a minimum the scale ratios are not exactly 10:1. The experimentally determined ratios are given in Table IV. As shown, the maximum deviation is 20 percent.

TABLE II

Absolute sensitivity of large area surface detector to the gamma rays of cobalt-60.

Scale	cpm/mr/hr
$0 - 10^5$	202
$0 - 10^4$	187
$0 - 10^3$	157
$0 - 10^2$	185

TABLE III

Absolute sensitivity of wound probe to the gamma rays of cobalt-60.

Scale	cpm/mr/hr
$0 - 10^5$	29.8
$0 - 10^4$	25.8
$0 - 10^3$	27.8
$0 - 10^2$	34.2

TABLE IV

Experimentally determined scale ratios.

Scales	Theoretical Ratio	Actual Ratio
$10^5 - 10^4$	10	9.0
$10^5 - 10^3$	100	85
$10^5 - 10^2$	1000	1000
$10^4 - 10^3$	10	9.8
$10^4 - 10^2$	100	100
$10^3 - 10^2$	10	12

INSTRUCTIONS FOR USE

General Precautions

The exposed surfaces of the detector assemblies have been given a thin (one micron) layer of gold, aluminum, and silicon monoxide to keep out visible light and present an inert element to most caustic or acidic solutions. Satisfactory operation of the detectors will depend on keeping this protective surface intact. Operating personnel are advised to take reasonable precautions to prevent penetration or abrasion of this protective layer.

When not in use, the surface detector should have its protective cover in place. The wound probe tip should be jacketed in a protective sleeve and the assembly placed in its container when not in actual use.

Operating Procedure

A. Surface Detector

1. Rotate the range switch to test position.
2. Place unit operate switch to ON position. Meter reading should go beyond red line. If not, battery replacement is indicated.
3. Retract surface detector cover.
4. Place unit with surface detector close to active area. Rotate range switch to give a maximum on-scale reading. Full-scale count rate of meter is indicated by positions of range selector.
5. After survey is completed, move operate switch to off. Position protective cover over surface detector opening.

B. Wound Probe

1. Make sure operate switch is in OFF position.
2. Plug in wound probe assembly.
3. Turn unit on and check battery potential as above (2).

4. Place detector end of probe assembly on or near active area. Continue as in (4) above.

5. After survey is completed, place operate switch in OFF position and disconnect wound probe assembly.

C. The presence of alpha radiation in the presence of other radiations can be determined by depressing the alpha switch. The indicating meter will then be unresponsive to beta or gamma radiation. Readjustment of the range (as in A-4 above) may be required.

REFERENCES

1. R. L. Williams, P. P. Webb, RCA Review 23, 42 (1962).