UNCLASSIFIED

| | |
|---|---|
| AD NUMBER: | AD0363622 |
| CLASSIFICATION CHANGES | |
| TO: | Unclassified |
| FROM: | Secret/FRD |
| LIMITATION CHANGES | |
| TO: | Approved for public release; distribution is unlimited. |
| FROM: | Distribution authorized to U.S. Defense agencies only; Administrative/Operational Use; 1 Nov 1952. Other requests shall be referred to Defense Atomic Support Agency, Washington, DC 20301. |
| AUTHORITY | |
| 21 Dec 1984, per DNA ltr. | |

THIS PAGE IS UNCLASSIFIED

| | |
|---|---|
| AD NUMBER: | AD0363622 |

CLASSIFICATION CHANGES

TO:

Secret/FRD

FROM:

Secret/RD

AUTHORITY

25 Jul 1965, per DASA document marking

# SECURITY MARKING

The classified or limited status of this report applies to each page, unless otherwise marked.
Separate page printouts MUST be marked accordingly.

"This document contains information affecting the National Defense of the United States within the meaning of the Espionage Laws, Title 18, U. S. C., Section 793 and 794. Its transmission or the revelation of its contents in any manner to an unauthorized person is prohibited by law."

EXCLUDED FROM AUTOMATIC
REGRADING; DOD DIR 5200.10
DOES NOT APPLY

" ONE HALF ORIGINAL SIZE "

attachment A

SECRET

WT-629

Copy No. [redacted]

CATALOGED BY: DDC 363622

AS AD NO.

# *Operation*

# IVY

## PACIFIC PROVING GROUNDS

TECHNICAL LIBRARY
29 JUL 1965
A/1168/65
DEFENSE ATOMIC
SUPPORT AGENCY

November 1952

Transclassified by ~~3-7-58~~
(Signature of person authorizing
transclassification and date
thereof)
T. Abernethy 10-20-58

Project 6.7a

## PRESSURE-TIME MEASUREMENTS IN DEEP WATER

This material contains information affecting the national defense of the United States within the meaning of the espionage laws, Title 18, U.S.C., Secs. 793 and 794, the transmission or revelation of which in any manner to an unauthorized person is prohibited by law.

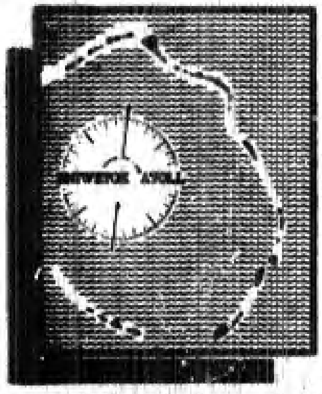

DDC
AUG 6 1965
TISIA D

[redacted]

FORMERLY RESTRICTED DATA
HANDLE AS RESTRICTED DATA IN FOREIGN DISSEMINATION
SECTION 144B, ATOMIC ENERGY ACT, 1954

JOINT TASK FORCE 132

DDC CONTROL
NO 53373

~~FORMERLY RESTRICTED DATA~~
HANDLE AS RESTRICTED DATA IN
FOREIGN DISSEMINATION
SECTION 144b, ATOMIC ENERGY ACT 1954

SECRET

SECRET

WT-629

This document consists of 46 pages
No. 220 of 230 copies, Series A

## Report to the Scientific Director

# PRESSURE-TIME MEASUREMENTS IN DEEP WATER

By

W. J. Thaler

U. S. MILI[illegible] [illegible] REPORT DIRECTLY
FROM DDC. [illegible] REQUEST THROUGH Sponsoring Agency to:
Director
Defense Atomic Support Agency,
Washington, D. C. 20301

Office of Naval Research
Navy Department
Washington, D. C.
January 1953

~~RESTRICTED DATA~~

~~This document contains restricted data as defined in the Atomic Energy Act of 1946. Its transmittal or the disclosure of its contents in any manner to an unauthorized person is prohibited.~~

This material contains information affecting the national defense of the United States within the meaning of the espionage laws, Title 18, U.S.A., Secs. 793 and 794, the transmission or revelation of which in any manner to an unauthorized person is prohibited by law.

FORMERLY RESTRICTED DATA
HANDLE AS RESTRICTED DATA IN FOREIGN DISSEMINATION
SECTION 144B, ATOMIC ENERGY ACT, 1954

GROUP-1
Excluded from automatic
downgrading and declassification

SECRET

# ABSTRACT

The objectives of Project 6.7a were (1) to obtain the pressure-time history of the underwater pressures as a function of range in deep water from the Mike shot of Operation Ivy and (2) to attempt a correlation of these data with the basic problem of air-earth-water coupling of blast waves and possible effects to be expected on underwater ordnance.

The general procedure was to position pressure-time recording stations (tuna cans) at distances of 1, $1\frac{1}{2}$, and 2 miles from Ground Zero. Each station would contain complete systems for recording the transient pressure pulses resulting from the Mike shot obtained by pressure-sensing elements at various depths in the deep water on the ocean side of the shot island. In addition two of the buoys were equipped to telemeter the pressure-time signals via an airborne relay to a remote recording station aboard a Task Force vessel.

The telemeter records obtained showed no evidence of a pressure signal. It was expected that this would be the case because of the relatively weak signal strength as received in the relay aircraft from the buoy transmitter.

At the conclusion of the Mike shot, none of the instrumentation was recovered. Therefore no positive results are available. The following possible explanations of the loss of the instrumentation are presented:

1. The water column thrown up from the Mike shot (assuming a 10-Mt yield over a free water surface) would have had a radius of 9160 ft. The accompanying inward motion of the water in the adjacent area would extend considerably farther out. The tuna can may have "gone up the spout." Discussions with authorities in this field have led the Project Officer to believe that this is the most plausible explanation for the loss of equipment.
2. The underwater pressures were so great at the ranges in question that the tuna cans were ruptured below the water line and sank.
3. The mass motion of the water caused the cans to part from the mooring lines and drift out to sea.
4. The combination of thermal shock and air-blast pressure ruptured that part of the tuna cans above the water, and subsequent sea action sank the cans.

Some evidence exists to support item 1 in that two of the spherical flotation buoys supporting the mooring lines were found three days after the Mike shot, approximately 100 miles to sea northwest [illegible] the atoll.

It is suggested that the circumstances indicate the desirability of attempting a similar measurement program at some future test.

# ACKNOWLEDGMENTS

The work described in this report was a project sponsored jointly by the Office of Naval Research (ONR) and the Bureau of Ships (BuShips). The BuShips made available shipyard facilities and personnel at the Naval Electronics Laboratory (NEL), San Diego, Calif., for modification of the standard can buoys to serve as instrument cans and supplied electronics technicians for the actual operation, one from the NEL and one from the Naval Radiological Defense Laboratory (NRDL).

The project personnel in the Forward Area were E. E. Bissel and M. W. Oleson of the Naval Research Laboratory (NRL), W. R. Brockman and E. P. Straubel of the NEL, and K. F. Sinclair of the NRDL.

Special acknowledgment is due LT T. E. Allen, USN, Captain of the USS Elder, AN-20, and his crew, who put down the deep-sea moors and instrumentation under extremely difficult weather conditions.

Much dependence was placed on the help, advice, and direction given by members of the J-Division of Los Alamos Scientific Laboratory (LASL), particularly by P. B. Hooper, R. H. Campbell, and F. B. Porzel.

The theoretical treatment given in Appendix A is the work of C. B. Morrey, Jr., Mathematics Department Head, University of California, Berkeley, and members of his staff.

# CONTENTS

## ILLUSTRATIONS

# PRESSURE-TIME MEASUREMENTS IN DEEP WATER

## 1 OBJECTIVES

The primary objective of Project 6.7a was to obtain pressure-time measurements of the underwater pressures in deep water as a function of range from the Mike shot of Operation Ivy. The importance of these measurements to the over-all program lies in the application of the results to some basic problems concerning weapons effects. The data would support measurements made by Sandia Corporation in the shallow waters of the lagoon.[1] The paucity of data of any sort on the pressure-time history of underwater shock waves from atomic weapons is evident. In addition the physical geometry of the Mike shot afforded an opportunity of investigating the air-earth-water coupling and the air-water coupling of high-intensity shock waves. These coupling effects at present are not very well understood because of the complex nature of the phenomena.

The secondary objectives of the project were (1) to observe, under actual field conditions, the operation of special instrumentation, which was designed for deep water pressure-time measurements of large-scale underwater explosions, and (2) to gain experience in the technique necessary for installation, maintenance, and operation of a test array under such conditions.

## 2 BACKGROUND

The Office of Naval Research (ONR) and the Bureau of Ships (BuShips) submitted a joint project for Operation Ivy to measure the deep water pressure-time history of the underwater shock wave from the Mike shot. A Project Officer was appointed by the BuShips on 21 April 1952 and was charged with the over-all coordination of the project. On 6 June 1952, the Project Officer, through proper channels, recommended the cancellation of Project 6.7a. This led to a joint meeting of representatives of the BuShips and the ONR to discuss the situation. As a result of this conference, the BuShips redetermined the extent of its support. William J. Thaler of the ONR assumed the duties of Project Officer on 14 July 1952. At this time no equipment was on hand, and the time schedule of the operation was extremely tight.

Previous work in this field was nonexistent. The nature of the weapon and the uncertainties connected with the peculiar geometry of the test site from the standpoint of shock wave behavior under such geometry necessitated some arbitrary decisions by the Project Officer as to the characteristics of the instrumentation and the nature and location of the test array. The first logical step was to attempt to determine the magnitude of the underwater peak pressure to be expected as a function of range from Ground Zero. Since it seemed a hopeless task to attempt an exact theoretical solution of such a complicated problem in the short time available, it was decided to try to determine the upper and lower limits of the underwater peak pressure to be expected. The upper limit was calculated by assuming a surface charge (i.e., center of gravity of the charge at the surface of the water) set off in a semi-infinite water medium. Some small-scale tests of such a nature had been carried out by the Bureau of Ordnance, and extrapolation to an atomic bomb in the megaton range had been reported in Report AFSWP-351, entitled Super Effects Handbook. Assuming a yield of 4 Mt as directed for planning purposes, the peak pressures at ranges of interest would vary from 2000 to 5000 psi. The lower limit was calculated by assuming that the geometry of the test site was essentially a truncated cone whose flat top was essentially at the water surface with a slope of 20° off to deep water and that the cone was a perfectly rigid medium with the charge set off at the center of the flat top (see Fig. 1). The calculation is given in Appendix A. Obviously the underwater shock wave is produced by the air blast on the water surface in this case since no shock wave is transmitted to the water through the rigid medium. The results for ranges of interest indicated peak pressures varying between 100 and 20 psi. These data enabled a reasonable operational plan to be developed.

## 3 OPERATIONS

The operational plan put into effect in the Forward Area was essentially complete at an early stage in the project planning. After the magnitude of pressures to be expected had been considered, suitable instrumentation was sought. Fortunately, the Project Officer was also responsible for the development of special underwater pressure-time measuring instrumentation under Armed Forces Special Weapons Project (AFSWP) sponsorship. This instrumentation was specifically designed for use in a possible atomic depth charge test and seemed reasonably well suited for use in Operation Ivy on Project 6.7a. Contracts were let for three eight-channel systems of Wiancko Engineering Company equipment, one five-channel system of Horizons, Incorporated, equipment, and four eight-channel systems of General Electronics Laboratories, Incorporated, telemetering equipment. The telemetering equipment was intended to parallel the Wiancko gauge signals and act as a backup system. These instrumentation systems will be described in detail in Sec. 4.

To house the instrumentation, four first-class standard can buoys were obtained from the Coast Guard. These can buoys were then modified to contain the instrumentation systems and necessary battery banks for power requirements. Figure 2 shows the four can buoys (tuna cans) loaded on a flat car truck for shipping. A can buoy is pictured in Fig. 3, with the cage for housing the electronic equipment and the cover in the foreground. Figure 4 shows the battery bank located in the bottom of the can buoy, and Fig. 5 shows the internal stiffeners and rings for shock cord support. In Fig. 6 are seen the cage shock mounted within the can buoy and the lead-lined box in the bottom for protecting the photographic recorder from radiation. In the short time available there was no possibility of designing and constructing special instrument cans, and the can buoys were the only solution. Procurement of anchors, wire cable, spherical flotation buoys, and accessory equipment for laying deep-sea moors was also initiated.

The operational plan finally put into effect was as follows: All equipment to be used on the project was assembled at the Naval Supply Center, Oakland, Calif., after successful field tests had been conducted on all the instrumentation systems. This was accomplished prior to 1 October 1952. The equipment was then loaded aboard the USS Leo for transportation to the Forward Area. Five project personnel were aboard ship to complete the installation of electronic equipment in the can buoys en route to the Forward Area. Unfortunately, owing to inclement weather, little was accomplished along these lines. Upon arrival at the Forward Area, the project personnel were met by the Project Officer. Plans for moving the electronic equipment ashore under shelter for final installation had to be abandoned since the necessary security clearance on several key personnel had not yet been granted. This meant that the work had to be done aboard the USS Leo, which was very unsatisfactory. These operations in the Forward Area began on 20 October 1952. The project personnel were instructed to continue installation and final checkout of the electronic instrumentation in the tuna cans and the Naval

Research Laboratory (NRL) telemetering trailer. The Project Officer boarded the USS Elder, AN-20, a net layer furnished by ComServPac to accomplish the laying of the deep-sea moors. Three moors were planned on the ocean side of the shot island at distances of 1, 1½, and 2 miles from Ground Zero. Previous studies of oceanographic conditions indicated that the surface current was sufficiently strong and steady to stream the moors parallel to the reef. The necessary mooring equipment was loaded aboard the AN-20, which then proceeded to the test site. Fathometer runs indicated the water depths at the ranges chosen were 200 fathoms at 1 mile, 375 fathoms at 1½ miles, and 500 fathoms at 2 miles. The weather was very unfavorable and the sea extremely rough throughout all the operations. In spite of the weather, the first two moors, at 200 and 375 fathoms, were laid with little trouble owing to the unceasing and competent work of the captain and crew of the AN-20. The first two attempts to lay the third moor resulted in loss of the rigging, but the third attempt was successful. All moors were in position on 29 October 1952.

Concurrently with this mooring operation, the electronic instrumentation was completed and checked out aboard the USS Leo. The NRL trailer was transhipped to the USS Curtiss, together with two project personnel. A third man was sent to Kwajalein to control the relay telemetering equipment which was installed in a P2V. The Project Officer was informed that the telemetering systems would have to be operating on MX day, 28 October 1952. To this end, the USS Arikara, ATF-98, took aboard the two instrument cans containing the telemetering equipment and proceeded to the test site to attach the cans to the moors. The weather was too rough to permit installation of the tuna cans, and a last-minute failure of the main power supply inverters in the Wiancko systems in both cans further complicated the situation. It was decided to operate the telemetering systems from the deck of the ATF-98. The operation plans called for the USS Curtiss with the telemetering trailer to be on a station 35 miles distant from Ground Zero. The aircraft relay was to be 30 miles from Ground Zero. Figure 7 shows the arrangement of the Ivy telemetering setup.

On MX day, however, the USS Curtiss was not on station, and no complete systems check of the telemetering equipment was possible.

At the conclusion of the MX-day test, it was considered desirable to fly another range test to determine whether the equipment was capable of operating over the required distance. It proved to be impossible to arrange such a flight since the aircraft had patrol schedules and an engine check requirement to meet. This proved to be a fatal blow to telemetering results.

After MX day the telemetering tuna cans were brought back to the USS Leo. A 2.5-kva inverter was installed in the tuna can housing the Horizons system. Only one d-c inverter could be found to use as replacement for the three inverters which had failed in the Wiancko systems. It was decided to sacrifice one gauge line and run a power cable from the 2.5-kva inverter in the Horizons can to the tuna can containing one Wiancko system. The spare inverter was then installed in a Wiancko telemetering can. This left one Wiancko telemetering can inoperative, and this tuna can was beached on Parry.

The Horizons tuna can and the straight Wiancko tuna can were positioned at the 1½-mile station on 30 October 1952. During the final assembly, a fire broke out in the Horizons can but was put out with a $CO_2$ extinguisher and the lid was clamped on. On the following day the Wiancko telemetering can was put in position at the 2-mile station by the net layer and the USS Yuma, ATF-96. The net layer then proceeded to the Horizons can and began repair operations at sea. This very difficult task was accomplished by project personnel. The power cable in the Horizons can had burned up, but the system was undamaged. However, an inspection of the gauge cables led to the discovery that all the gauge lines were parted about 40 ft below the surface of the water. Project personnel reported later that the cables appeared to have been twisted as though caught in a propeller screw, although all the supporting ships were extremely careful to avoid such a mishap and none reported such an occurrence. The reason for this cable parting is not known. The Horizons electronics were therefore bypassed since it was not possible at such a late date to replace the gauges or dismantle the equipment.

Therefore on shot day there were two cans operating: (1) one can containing eight channels of self-recording Wiancko equipment at 1½ miles from Ground Zero and (2) one can containing eight channels of self-recording Wiancko equipment and eight channels of telemetering at 2 miles from Ground Zero.

During the actual shot operation, the telemetering system was operated by the Project Officer with two project personnel in the NRL trailer aboard the USS Curtiss, and control sequences were initiated by one project employee in the P2V aircraft relay station. Some electronic difficulties in the operation of the telemetering system, together with the failure of the voice count sequence aboard the USS Curtiss at M − 10 sec (after 2 hr of perfect voice count reception), invalidated the telemetering results.

Indications were that the airborne-received signal originating from the telemetering buoy was weak. An attempt was then made to calibrate the telemetering channels. However, the subcarrier frequencies could not be located in the NRL recording trailer, and at this point the calibration was discontinued. It was decided to record the data without calibration since an approximate system calibration was known. At the same time the relay aircraft was experiencing trouble in finding its location with respect to the USS Curtiss and Ground Zero. The range calibration was not operating on the radar scopes; so the operator was estimating distances. The aircraft contacted the USS Curtiss and requested a radar check on its location, but the Curtiss did not reply. The aircraft stayed on position at an estimated 31 miles from Ground Zero. At H − 2 min the command link energized the Horizons system, and at H − 5 sec the Wiancko system was energized. At H + 8 sec the aircraft made a right turn to a new heading of 090, placing the tail structure toward Ground Zero. Shortly afterward the relay aircraft returned to Kwajalein, and all project equipment was removed.

Recovery operations were initiated on M + 3 days. The project personnel boarded the USS Elder and proceeded to the test site. There was no sign of any of the instrument cans or of the 12 spherical flotation buoys at the moor positions. The USS Elder cruised up and down the reef searching for some evidence of beaching, but nothing was found. The search was abandoned at 1730, and the USS Elder returned to the lagoon. Surface current and wind charts were examined, and it was calculated that the tuna cans, if adrift, would average 25 miles per day to the west of the atoll. Task Group 132.3 was notified and was requested to initiate an air-sea search in the appropriate area. On M + 4 days the Project Officer was notified that two cans had been sighted approximately 100 miles west of the atoll, and the USS Arikara returned on M + 5 days with one spherical flotation buoy, the other having been sunk. No sign of the instrument cans was ever reported.

Necessary roll-up operations were completed on 6 November 1952, and project personnel departed for the ZI on 7 November 1952.

## 4 INSTRUMENTATION

The instrumentation for Project 6.7a was supplied by Horizons, Incorporated, the Wiancko Engineering Company, the General Electronics Laboratories, Incorporated, and the NRL.

### 4.1 Horizons System

The Horizons system is a seven-channel recorder, complete with piezoelectric blast gauges, signal cables, preamplifiers, recording apparatus, Q-step calibrator, and automatic sequence control for the quantitative recording of underwater blast pressures. It is composed of six basic units:

1. Hydrophones and cables
2. High-input-impedance preamplifiers and Q-step calibrators
3. Regulated power supply
4. Sequence control equipment
5. Tuning-fork frequency standard, 1000 cycles/sec

6. Magnetic-tape-recording apparatus, 0 to 5000 cycles/sec

Five of the seven channels are used in recording the signals received from the five blast gauges, the sixth channel records the output of the 1000-cycle/sec tuning-fork frequency standard, and one channel is the Ampex 60-cycle "speed-lock" signal used to control the playback speed. Each of the five recording channels may be used to record blast pressures up to 3000 psi with a response flat within 3 db from 0.02 to 5000 cycles/sec. The entire equipment is semiautomatic, requiring only two 24-volt d-c signal pulses for remote-controlled operation. These timing signals are applied prior to the blast being recorded.

The gauges have over-all dimensions of 1.5 in. in diameter by 3 in. long, including the housing and $\frac{1}{4}$-in.-thick diaphragm of brass. The gauge cable is Simplex No. 231 signal-free coaxial cable, neoprene jacketed, and is water sealed to the gauge housing by a compressed rubber sandwich (Wilson seal). This inner chamber (end of cable connection to crystal lead) is patted with GE No. 227 cable joint compound for additional moisture resistance. These gauges will withstand a water pressure of at least 1000 psi without leakage. The crystal cavity is 0.152 in. deep by 0.650 in. in diameter for mounting the two piezoelectric $BaTiO_3$ disks, which are each 0.071 in. thick and 0.610 in. in diameter. This cavity is sealed from the cable-end cavity by a small hermetic seal (Electrical Industries, Inc., type AA-40T-S). One of the $BaTiO_3$ disks has a $\frac{1}{8}$-in. hole through its center. The crystals are connected in parallel and generate a positive charge with positive pressure. They are operated in the thickness mode.

The preamplifier unit consists of five cathode-follower amplifier stages, one for each of the five recording channels. The amplifiers are of the split cathode resistor type and have an input impedance of the order of 300 megohms and will take a 40-volt input signal without overload. The gain of each amplifier stage is adjustable to any of six values (1/1, 1/2, 1/4, 1/6, 1/8, and 1/10 of full input) by setting it to the expected blast pressures of 300, 600, 1200, 1800, 2400, and 3000 psi, respectively. Simultaneously the magnitude of the calibrating voltage is varied in the reciprocal of the above ratios so that the magnetic recorder itself always receives a constant calibration voltage regardless of the pressure setting. The Q-step calibration circuit consists of fixed resistor-capacitor networks across each blast line which are switched into the circuit when desired. The capacitors are charged to a predetermined voltage and then discharged through the lines. The height of the pulse obtained is to be used in calibration, and the exponential rate of decay is determined by the total RC of the input circuit. The determination of the blast pressure is independent of the gain of the recording system. It is only necessary to ratio the heights of the pressure pulse signal and the calibration signal of the final recorded data. The pressure reading is also independent of variation of the time constant of the circuits except as it affects the frequency responses. The sequence control chassis controls the timing sequence of the entire remote-controlled recording of the blast pressure. It is triggered by two incoming 24-volt d-c signals prior to the blast.

The heart of the unit is an Eagle Signal Corp. Multiflex timer which programs the associated relays for recorder starting, calibration before and after blast, and final power shutdown.

The 1000 cycle/sec tuning-fork frequency standard, manufactured by Riverbank Laboratories, is used as a time standard, its output being recorded on channel 6 of the Ampex tape recorder. The temperature coefficient of frequency of the unit is 1 ppm.

The magnetic recorder used is Ampex tape recorder model S-3107. This is a seven-channel magnetic-tape recorder having a response which is flat from direct current to 5000 cycles within +1, −3 db. A peak input of 1.41 volts is the maximum that is allowable without overloading the recorder.

Figure 8 is a photograph of the complete Horizons system with the blast-gauge input circuits, preamplifiers, sequence tuner, and calibration circuit in rack A; the input to the Ampex recorder and the Ampex speed-lock control system in rack B; and the Ampex recorder and power supply in rack C. Figure 9 is a photograph of the underwater barium titanate blast gauge. Figure 10 is a detailed drawing of the construction of the gauge that is shown in Fig. 9.

### 4.2 Wiancko System

The Wiancko system consists of four units: an oscillator, a coupling unit, a recording oscillograph, and the underwater pressure pickups. The oscillator generated a 3-kc carrier frequency which was fed into the coupling unit, which in turn routed this carrier to the individual pickup channels. At the pickups the carrier was amplitude-modulated by a variable-reluctance bridge circuit controlled by the pressure applied to the pickup. The amplitude-modulated signal was then returned to the coupling unit, where it was demodulated and filtered. From the filters the pressure signal was fed directly to the recording oscillograph. The system operates from a 28-volt d-c power supply driving a 400-cycle inverter. The recording oscillograph was manufactured by Consolidated Engineering Corporation and is designated type 5-116. Each Wiancko system had a total of eight pressure pickups feeding a nine-channel oscillograph.

Figure 11 is a photograph showing two Wiancko variable-reluctance underwater pressure gauges and cables, together with the multichannel oscillograph recorder. Figure 12 shows one complete Wiancko system containing eight channels and mounted on standard 19-in. panel racks. Figure 13 is a photograph of the Wiancko system with the recorder shown in the central panel. Figure 14 is a rear view of the Wiancko system.

### 4.3 Telemetering System

The General Electronics Laboratories, Incorporated, designed and constructed four eight-channel wide-band telemetering systems to satisfy certain specifications determined by the NRL personnel who had successfully conducted telemetering of underwater pressure-time data during February and March 1952. The specifications were as follows:

The system must be capable of transmitting information over line-of-sight distances of at least 70 miles. In circumstances where line-of-sight transmission paths of the required length are not available, the system must incorporate an airborne relay which will receive and retransmit, without distortion, the original transmitted information. The entire system then must incorporate four basic units as follows:

1. Terminal transmitter
2. Airborne relay receiver
3. Airborne relay transmitter
4. Terminal receiver

A satisfactory telemetering system must meet the following requirements:

1. Each complete system shall transmit eight channels of signal information.
2. Each channel shall handle signal frequencies from direct current to 10 kc.
3. Each channel shall accommodate a maximum signal input of +2.5 to −2.5 volts with an input impedance of 1 megohm.
4. The terminal receiver output corresponding to a maximum signal input shall be at least 100 mv with an output impedance of 500 ohms or less.
5. The error of signal reproduction shall be as small as practical but in no case greater than 5 per cent of maximum signal.
6. The terminal transmitter and the airborne relay equipment shall operate from a 28-volt d-c source. The terminal receiver shall operate from a 110-volt 60-cycle a-c source.

Figure 15 is a block diagram of the complete telemetering system.

The following broadly defined system was proposed. Input signal information is applied to eight frequency-modulated subcarrier oscillators operating in the 1.8- to 3.4-Mc range. A composite signal obtained by adding the subcarrier outputs is used to modulate the main transmitter operating in the 200-Mc range. This transmitted signal will be amplitude-demodulated by the relay receiver and applied to amplitude-modulate the relay transmitter. The terminal receiver will amplitude-demodulate the relayed signal and then heterodyne each subcarrier to 10 Mc. The eight resulting frequency-modulated signals are then individually amplified, limited, and detected.

*(a) Subcarrier Channels.* Each subcarrier channel will have a deviation of 50 kc, and the center frequencies of adjacent oscillators will be spaced 200 kc apart from 1.8 to 3.4 Mc. The signal input circuit of each subcarrier oscillator will be a cathode-follower stage and must include a low-pass filter and amplitude limiter to prevent interchannel interference resulting from signals of unusually large amplitude or frequency. The eight frequency-modulated subcarrier signals will be added, using cathode-follower circuits, each coupled through an isolating impedance to a common load impedance. The composite signal thus obtained will have frequency components extending from approximately 1.7 to 3.5 Mc. The selection of components and mechanical design of this equipment must be given special attention since it will be subjected to considerable mechanical shock.

*(b) Terminal Transmitter.* The composite signal obtained as above must be amplified by a wide-band (video) amplifier and used to grid-modulate a crystal-controlled transmitter with an output frequency in the range of 200 to 300 Mc. The requirement on the r-f output power of this transmitter is that the field strength at a line-of-sight distance of 70 miles from a ground plane dipole transmitting antenna be at least 50 $\mu$v per meter.

*(c) Relay Receiver.* Sufficient amplification at the frequency of the terminal transmitter must be provided so that linear amplitude demodulation (with no i-f amplification) will be assured at all times. An AVC circuit will be necessary to prevent overloading of the r-f amplifiers from strong signals. The output of this receiver will duplicate the composite modulating signal of the terminal transmitter.

*(d) Relay Transmitter.* The relay receiver output will be applied to modulate the relay transmitter. The frequency of this transmitter must also be crystal controlled and must be sufficiently far removed from that of the relay receiver so that it will not cause interference. The r-f power output should be the minimum necessary to assure a signal strength of 500 $\mu$v per meter from a ground plane dipole at a line-of-sight distance of 5 miles.

*(e) Terminal Receiver.* The terminal receiver may be considered in two sections. The first section will duplicate the relay receiver, except that the incoming frequency will be that of the relay transmitter. The composite signal obtained from the amplitude demodulator will be applied to eight individual heterodyne converters, each converter being adjusted to heat with one of the subcarrier frequencies to provide a 10-Mc output frequency. The eight resulting frequency-modulated signals, all centered on 10-Mc, may then be amplified, limited, and detected, using standard broadcast frequency-modulation techniques.

Figures 16 and 17 show the results of actual field tests of the telemetering system.

### 4.4 NRL System

The NRL provided a recording trailer, command radio link, and recording equipment for the telemetered signals. Figure 18 is a block diagram of the buoy telemeter system, Fig. 19 is a block diagram of the relay aircraft telemeter system, and Fig. 20 is a block diagram of the trailer telemeter and recording equipment.

*(a) Trailer.* The recording trailer used on the experiment was a surplus SKIM equipment trailer, 21 ft long, 8 ft wide, and 10 ft high, which housed 25 channels of CRO recording and 26 channels of Mirragraph recording. The total weight including all instrumentation was 19,000 lb.

*(b) Command Link.* The command link equipment consisted of a VHF command transmitter in the aircraft relay and VHF receivers in the instrumentation cans, all operating on

143.28 Mc. The receivers provided on and off operation of all equipment plus calibration of all telemetering channels.

*(c) Ground-to-air Link.* An ART 13 transmitter and an SX28 receiver operating at 2390 kc were used for ground-to-air communication between the trailer aboard ship and the P2V aircraft relay station.

### 4.5 Ball Crusher Gauges

In addition to the electronic instrumentation described in Secs. 4.1 to 4.4, standard peak-pressure recording ball crusher gauges were also installed at each station. These gauges consist of a small copper ball mounted between two anvils, one fixed and the other movable. The ball is placed within a rubber sleeve which holds the ball against the fixed anvil. Pressure applied to the gauge forces the movable anvil against the copper ball, thus deforming it in proportion to the amount of pressure applied. The pressure range which these gauges will measure depends on the dimensions of the copper balls.

## 5 RESULTS

The telemeter records obtained showed no evidence of a pressure signal. It was expected that this would be the case because of the relatively weak signal strength as received in the relay aircraft from the buoy transmitter.

The self-recording systems in the instrument cans were never recovered since all the instrumentation was lost.

## 6 ANALYSIS OF DATA

No data analysis was possible since the telemeter records showed no pressure pulse and the self-contained recording equipment was lost with the instrumentation.

## 7 CONCLUSIONS

Owing to the lack of data, no conclusions can be drawn regarding the magnitude of the underwater pressures in deep water from the Mike shot of Operation Ivy. However, there undoubtedly was an underwater shock wave propagating outward from the Mike shot site. The Project Officer and personnel aboard the USS Curtiss at a range of 35 miles from Ground Zero definitely felt the underwater shock wave strike the ship approximately 40 sec after zero time. This is approximately the correct time delay for transit time of the underwater shock wave.

## 8 RECOMMENDATIONS

It is recommended that work continue on the telemeter system as it is felt that additional work can produce a satisfactory system which will fulfill the original specifications. The weak signal strength may be solved two ways. The first is to improve the design of all antennas. It may be possible to use Yogi antennas on the relay aircraft. However, since the aircraft has to circle, tracking of this type of antenna presents serious problems. Little improvement can be made on the buoy antenna installation. Additional directivity may be realized by using colinear vertical dipoles. However, the height of such an antenna design must be limited because of possible whipping of the antenna as the buoy moves in the water. All transmitters can be redesigned to provide a higher percentage of modulation and higher output power. The new coaxial power tetrode vacuum tubes have high efficiency at the frequencies used in the telemeter system and could be used in a new transmitter designed to provide higher power output. This will produce an increase in the received signal strength at a given point.

It is recommended that, if an airborne relay is to be used, the requisite aircraft should be assigned to the exclusive use of the telemeter project. This assignment should be effective in time to allow not only for testing of the installation on the aircraft but also for its operation in conjunction with the rest of the telemeter system in a final dry run as well as during the development period. Such an exclusive assignment should also enable sufficient tests at the Forward Area immediately prior to the operation to reduce the risk of having the relay aircraft in the wrong location at shot time.

It is recommended that no attempt be made to assemble equipment on shipboard while proceeding to the Forward Area. All equipment should be assembled and completely field tested prior to shipping.

It is recommended that, at some future test, measurements of the underwater pressure-time field as a function of range and depth from a surface-burst high-yield weapon should be made. This recommendation is based on the fact that all the instrumentation of Project 6.7a in Operation Ivy was lost as a result of the surface shot, and there is no assurance that the underwater pressure at the ranges in question was negligible. It is also based on the fact that there are no measurements of underwater pressure from a high-yield surface shot over water, and the tactical use of such a weapon may be of considerable interest for certain targets such as submarine pens, gravity dams, etc., where in addition to underwater effects the air-blast pressures and contamination effects may also be tactically advantageous.

## REFERENCE

1. G. W. Rollosson, Underwater Pressure Measurements in the Lagoon, Ivy Project 6.7b Report, WT-605, April 1953.

APPENDIX A

# THEORETICAL CALCULATIONS

## A.1 INTRODUCTION

An island has a shape which can be approximated by a frustrum of a right-circular cone. The circular top is flush with the surrounding sea, and the sides slope down into the deeps. At the center of this island an explosion occurs, and it is desired to find the pressure distribution in the surrounding water after the blast. The pressure distribution will be taken to conform to Taylor's blast theory. The effect of the island and the sea on the air blast is neglected. The water will be taken as an acoustic fluid. The underwater pressure distribution will be computed by first considering the island absent (i.e., an explosion over a deep sea) and then using geometric optics to take into consideration (1) the shielding effect of the mass of the island between the point of observation and certain of the "secondary sources" on the surface of the water and (2) the reflecting effect of the sloping sea bottom. The effects of pressure transmitted through the ground and into the water have been neglected. The effect of wave height on underseas pressure will be neglected in comparison with the explosion pressure. Although both can be added separately if desired, the static pressures due to depth and to the steady-state atmospheric pressure will not be included in this analysis.

Under these assumptions an expression is derived for the pressure distribution due to an explosion over a deep sea, and this is modified (Eq. 18) to take into consideration the "shadow" effect due to the shielding of the island as mentioned previously. The resulting expression presents computational difficulties. An upper bound for the pressure is given (Eq. 23), which may be sufficient for a number of applications.

## A.2 THE AIR BLAST

Let $\rho_0$ denote the air density before the explosion, and let E denote the total energy released (supposed instantaneously) in the explosion. Define

$$\begin{aligned} P_0 &= \frac{4S^2(\gamma)}{25\gamma} E^{2/5} \rho_0^{3/5} \\ K &= \frac{\rho_0^{1/5}}{E^{1/5}\, S(\gamma)} \end{aligned} \tag{1}$$

$$\begin{aligned} S(\gamma) &= (2.5)^{2/5} [B(\gamma)]^{-1/5} \\ B(\gamma) &= 2\pi \int_0^1 \psi(\eta)\, \phi^2(\eta)\, \eta^2\, d\eta + \frac{4\pi}{\gamma(\gamma-1)} \int_0^1 f(\eta)\, \eta^2\, d\eta \end{aligned} \tag{2}$$

where the functions $\phi(\eta)$ and $f(\eta)$ are defined by the differential equations

$$\frac{f'}{f}\left[(\eta-\phi)^2-\frac{f}{\psi}\right]=-3\eta+\left(3+\frac{\gamma}{2}\right)\phi-2\gamma\,\frac{1}{\eta}\,\phi^2$$

$$(\eta-\phi)\phi'=\frac{1}{\gamma}\,\frac{f'}{\psi}-\frac{3}{2}\,\phi \tag{3}$$

$$(\eta-\phi)\,\frac{\psi'}{\psi}=\phi'+\frac{2}{\eta}\,\phi$$

together with the boundary conditions

$$\phi(1)=\frac{2}{\gamma+1}\qquad \psi(1)=\frac{\gamma+1}{\gamma-1}\qquad f(1)=\frac{2\gamma}{\gamma+1} \tag{4}$$

For $\gamma$ given, Eqs. 3 and 4 may be integrated numerically, and the results may be substituted into Eqs. 1 and 2. Taylor has done this for $\gamma = 1.4$.

Taylor's theory, which assumes spherical symmetry, indicates that the pressure due to the explosion is

$$\begin{aligned} p &= P_0 t^{-6/5}\, f(Krt^{-2/5}) \qquad & r &< K^{-1}t^{2/5} \\ p &= 0 & r &> K^{-1}t^{2/5} \end{aligned} \tag{5}$$

where r is the distance from the point 0 and t is the time since the explosion. The first of Eqs. 5 corresponds to the interior of the explosion bubble, and the second corresponds to the exterior. This pressure distribution will be taken as that holding on the surface of the water.

The radius R and the velocity U of the shock surface are given by

$$R = K^{-1}t^{2/5} \tag{6}$$

$$U = E^{1/2}\,[\rho_0\, B(\gamma)]^{-1/2}\, R^{-3/2} \tag{7}$$

## A.3 THE DEEP-SEA BLAST

In an acoustic fluid in which symmetry exists about a vertical axis, the pressure $p = p(r,z,t)$ (where r is the axial distance and z is the depth) satisfies the wave equation

$$p_{rr}+\frac{1}{r}\,p_r+p_{zz}-\frac{1}{c^2}\,p_{tt}=0 \tag{8}$$

where c is the velocity of sound in the water. Define

$$p^0(r,z,\omega)=\int_{-\infty}^{\infty} p(r,z,t)\,e^{i\omega t}\,dt \tag{9}$$

Then, by Eqs. 3 and 6, since the fluid is initially at rest,

$$p^0_{rr}+\frac{1}{r}\,p^0_r+p^0_{zz}+\frac{\omega^2}{c^2}\,p^0=0 \tag{10}$$

and, by Eqs. 5 and 9,

$$p^0(r,0,\omega)=P_0\int_{(Kr)^{5/2}}^{\infty} f(Kr\tau^{-2/5})\tau^{-6/5}\,e^{i\omega\tau}\,d\tau \tag{11}$$

For an infinitely deep sea, in which $p \to 0$ as $z \to \infty$, an appropriate solution of Eq. 10 is

$$p^0(r,z,\omega) = P_0 \int_0^\infty F(S)\, J_0(Sr) \exp\left(-z\sqrt{S^2 - \frac{\omega^2}{c^2}}\right) S\, dS \tag{12}$$

where the S-contour from 0 to $\infty$ is indented below the axis at the branch point $S = \omega/c$ and where $F(S)$ is an unknown function to be determined. By Eq. 11

$$\int_0^\infty F(S)\, J_0(Su)\, S\, dS = \int_{(Ku)^{5/2}}^\infty f(Ku\tau^{-2/5})\, \tau^{-6/5}\, e^{i\omega\tau}\, d\tau$$

This expression may be inverted by means of the Fourier-Bessel theorem

$$F(S) = \int_0^\infty J_0(Su) \int_{(Ku)^{5/2}}^\infty f(Ku\tau^{-2/5})\, \tau^{-6/5}\, e^{i\omega\tau}\, d\tau\, u\, du$$

Putting this back into Eq. 12,

$$p^0(r,z,\omega) = -P_0 \frac{\partial}{\partial z} \int_0^\infty \left[\int_{(Ku)^{5/2}}^\infty f(Ku\tau^{-2/5})\, \tau^{-6/5} e^{i\omega\tau}\, d\tau \int_0^\infty J_0(Su)\, J_0(Sr) \exp\left(-z\sqrt{S^2 - \frac{\omega^2}{c^2}}\right) \frac{S\, dS}{\sqrt{S^2 - \frac{\omega^2}{c^2}}}\right] u\, du$$

Now

$$\int_0^\infty J_0(Su)\, J_0(Sr) \exp\left(-z\sqrt{S^2 - \frac{\omega^2}{c^2}}\right) \frac{S\, dS}{\sqrt{S^2 - \frac{\omega^2}{c^2}}} = \frac{1}{2\pi} \int_{-\pi}^{\pi} \int_0^\infty J_0\, S\sqrt{(u^2 + r^2 - 2ur\cos\theta)}$$

$$\exp\left(-z\sqrt{S^2 - \frac{\omega^2}{c^2}}\right) \frac{S\, dS\, d\theta}{\sqrt{S^2 - \frac{\omega^2}{c^2}}}$$

$$= \frac{1}{2\pi} \int_{-\pi}^{\pi} \exp\left[i\,\frac{\omega}{c}\, R(u,\theta,r,z)\right] \frac{d\theta}{R(u,\theta,r,z)}$$

where

$$R(u,\theta,r,z) = \sqrt{(u^2 + r^2 - 2ur\cos\theta + z^2)} \tag{13}$$

Therefore

$$p^0(r,z,\omega) = -\frac{P_0}{\underset{\wedge}{2\pi}} \frac{\partial}{\partial z} \int_0^\infty \int_{-\pi}^{\pi} \int_{(Ku)^{5/2}}^\infty f(Ku\tau^{-2/5})\, \tau^{-6/5} \exp\{i\omega[\tau + c^{-1} R(u,\theta,r,z)]\}\, d\tau\, \frac{d\theta\, u\, du}{R(u,\theta,r,z)}$$

$$p^0(r,z,\omega) = -\frac{P_0}{2\pi} \frac{\partial}{\partial z} \int_0^\infty \int_{-\pi}^{\pi} \int_{(Ku)^{5/2}}^\infty (Ku)^{5/2} + c^{-1} R(u,\theta,r,z)\, f(KuT^{-2/5})\, T^{-6/5} e^{i\omega t}\, dt\, \frac{d\theta\, u\, du}{R(u,\theta,r,z)} \tag{14}$$

where

$$T = t - c^{-1} R(u,\theta,r,z) \tag{15}$$

The symbols u and $\theta$ may be regarded as the radial distance and the polar angle in a polar coordinate system, respectively. Let $A = A(r,z,t)$ denote the region in the $u,\theta$-plane such that

$$u > 0 \quad \text{and} \quad (Ku)^{5/2} + c^{-1} R(u,\theta,r,z) \le t \tag{16}$$

If A is taken as null when Eq. 16 does not hold, we may reverse the order of integration in Eq. 14 and write

$$p^0(r,z,\omega) = -\frac{P_0}{2\pi}\frac{\partial}{\partial z}\int_{-\infty}^{\infty} e^{i\omega t} \iint_A f(KuT^{-2/5})\, T^{-6/5} \frac{dA}{R(u,\theta,r,z)}\, dt$$

Then, comparing with Eq. 9,

$$p(r,z,t) = -\frac{P_0}{2\pi}\frac{\partial}{\partial z} \iint_A f(KuT^{-2/5})\, T^{-6/5} \frac{dA}{R(u,\theta,r,z)} \tag{17}$$

In this expression, $(u,\theta,0)$ may be considered (in a cylindrical coordinate system) a "secondary source" point on the surface of the water and $(\tau,0,z)$ is the observation point. $R(u,\theta,r,z)$ is then the difference between these two points, and T is defined by Eq. 15. $dA = u\,du\,d\theta$ is the differential of area on the surface of the sea.

## A.4 THE ISLAND CORRECTION

Since the pressure p satisfies the wave equation, it can be expected to follow geometric optical behavior in the presence of obstacles whose dimensions are sufficiently large that the components of the Fourier spectrum of p of comparably large wavelength are negligible. In this section the results of the last section will be modified to account for the presence of the island by eliminating from the range A of integration in Eq. 17 all those points of A lying in the "shadow" of the island as seen from the point of observation $(\tau,0,z)$.

That is, we define a region $A' = A'(r,z,t)$ as all points of $A = A(r,z,t)$ such that the straight line connecting $(u,\theta,0)$ and $(r,0,z)$ does not cut any point of the island. Then instead of Eq. 17 we have

$$p(r,z,t) = -\frac{P_0}{2\pi}\frac{\partial}{\partial z} \iint_{A'} f(KuT^{-2/5})\, T^{-6/5} \frac{dA}{R(u,\theta,r,z)} \tag{18}$$

Similarly geometric optics may be used to correct for the effect of reflection from the conical sea bottom around the island. In view of the small curvature of the bottom, an approximation seems in order, namely, to consider the total pressure to be given by

$$p_{\text{total}}(r,z,t) = p(r,z,t) + p(r',z',t') \tag{19}$$

where

$$\begin{aligned} r' &= r\cos 2\alpha + z\sin 2\alpha \\ z' &= r\sin 2\alpha - z\cos 2\alpha \end{aligned} \tag{20}$$

where $\alpha$ is the angle of slope of the sea bottom.

In deriving Eq. 19, we approximate the sea bottom nearest to the observation point $(r,0,z)$ by a plane. Then $(r',0,z')$ is the image of $(r,0,z)$ in that plane, and the second term on the right of Eq. 19 corresponds to the reflection to $(r,0,z)$ from the sea bottom. Actually, this somewhat overestimates $p_{\text{total}}$.

Equation 19 is computed using Eq. 18. The areas $A'(r,z,t)$ and $A'(r',z',t')$ are not, of course, the same.

## A.5 AN UPPER BOUND FOR p

For certain purposes an upper bound for p is all that is required. By Eqs. 15 and 18,

$$p(r,z,t) = \frac{P_0}{2\pi} \iint_{A'} \left[ f(KuT^{-2/5}) \left( T^{-6/5} \frac{z}{R^3} - \frac{6}{5} T^{-11/5} c^{-1} \frac{z}{R^2} \right) - \frac{2}{5} f'(KuT^{-2/5})\, KuT^{-13/5} c^{-1} \frac{z}{R^2} \right] dA$$

Now $zR^{-3}\,dA = d\Omega$ is the solid angle subtended at the observation point (r,0,z) by dA. Therefore, discarding negative terms,

$$p(r,z,t) \le \frac{P_0}{2\pi} \iint_{A'} f(KuT^{-2/5})\, T^{-6/5}\, d\Omega \tag{21}$$

By Eqs. 15 and 16 for $(u,\theta,0)$ in A′, $T \ge (Ku)^{5/2} \ge (Ka)^{5/2}$, where a is the radius of the top of the island. By Eq. 21,

$$\begin{aligned} p(r,z,t) &\le \frac{P_0}{2\pi(Ka)^3} \iint_{A'} f(KuT^{-2/5})\, d\Omega \\ p(r,z,t) &\le p_m \iint_{A'} \frac{f(KuT^{-2/5})}{f(1)} \frac{d\Omega}{2\pi} \end{aligned} \tag{22}$$

where $p_m$ is the maximum pressure of the air blast at the edge of the island top.

## A.6 NUMERICAL CALCULATIONS

For a case in which $r = 3/2 \cdot a$, $z = 0.1a$, and $\alpha = 20°$, the solid angle subtended by A′ is, of course, less than $2\pi$. When this angle is not considerably smaller than $2\pi$, however, over all of A′ except a narrow region near the edges, the function $f(KuT^{-2/5})$ in Eq. 22 is essentially equal to 0.44, while $f(1) = 1/6$ when $\gamma = 1.4$. Therefore, in general, by Eq. 22, $p(r,z,t) \le 0.38p_m$, so that, by Eq. 19,

$$p_{total}(r,z,t) < 0.76\, p_m \tag{23}$$

This expression holds except in the region very near M, where p may get as high as $2p_m$. The dimensions of this region, however, are small compared with a.

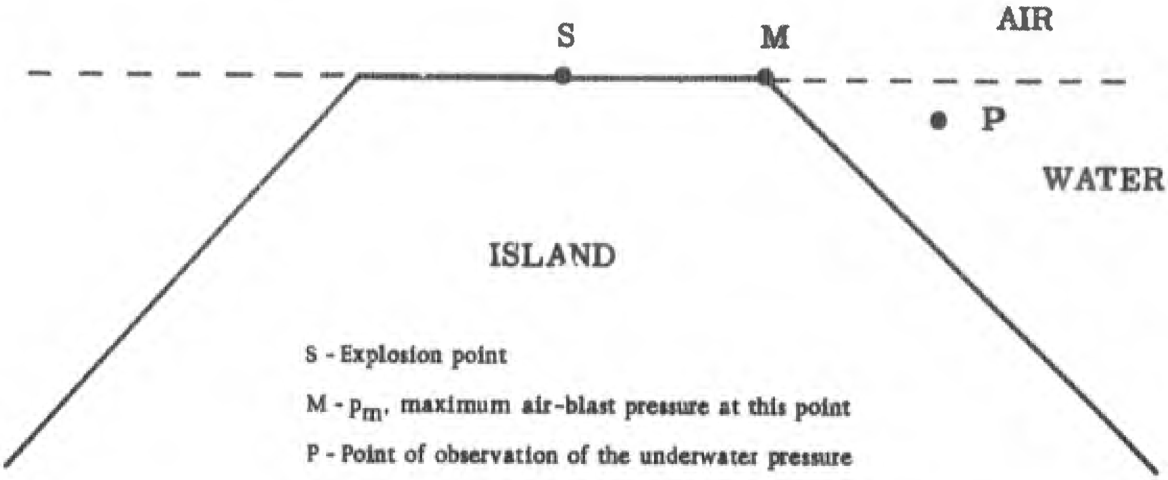

Fig. 1—Geometry of test site.

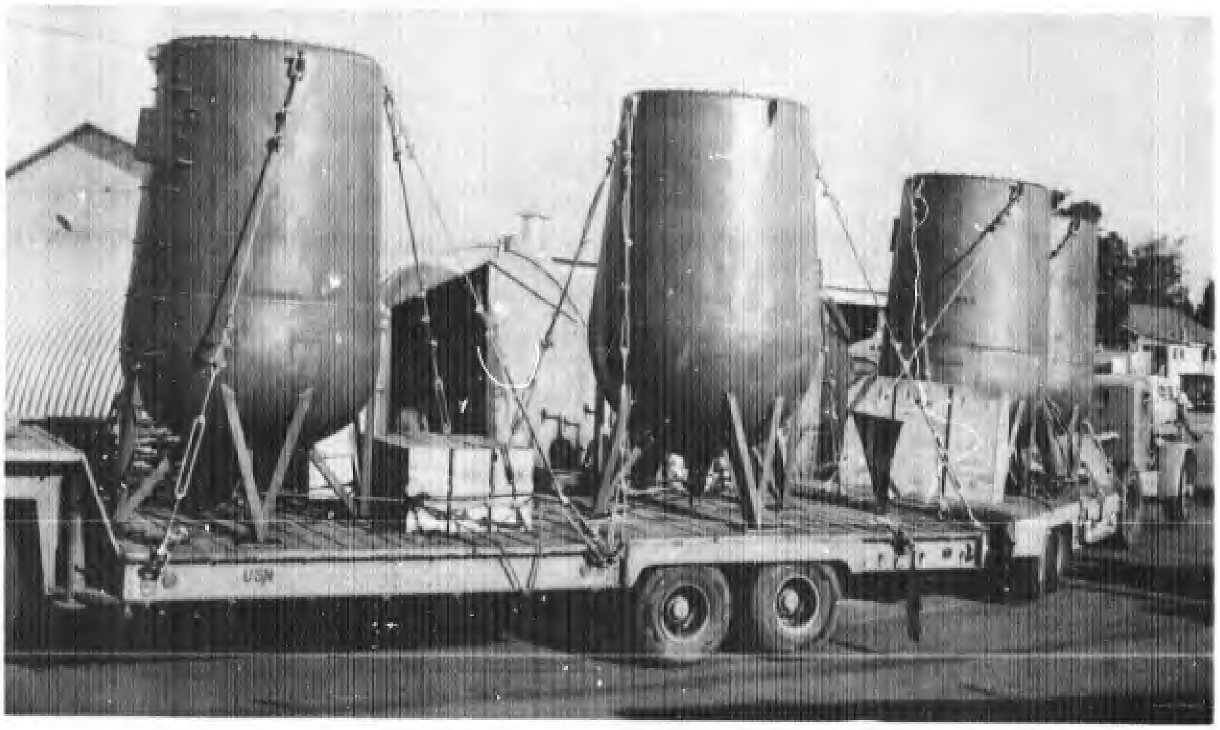

Fig. 2—Tuna cans.

Fig. 3—Tuna can with instrument cage.

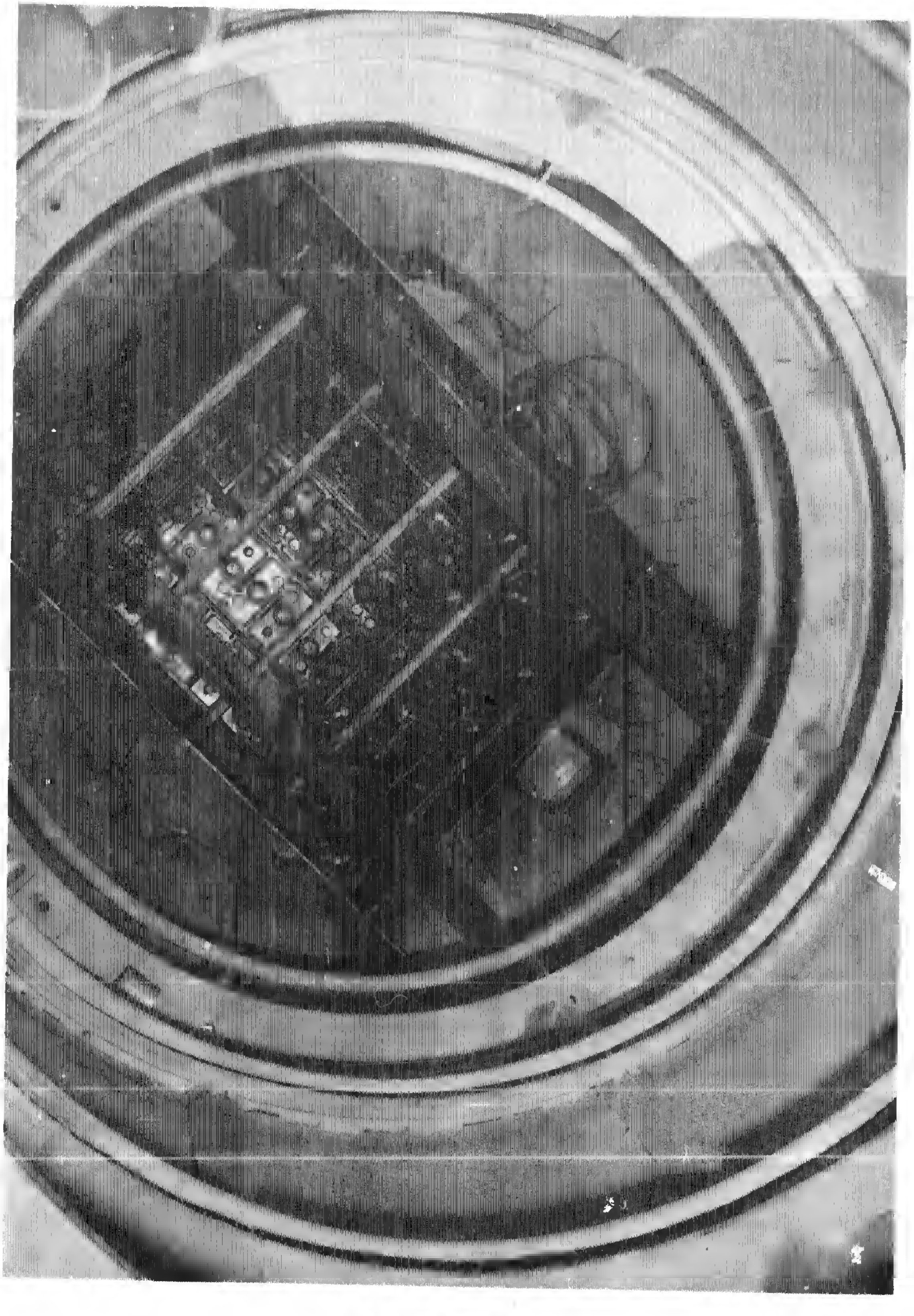

Fig. 4—Battery bank.

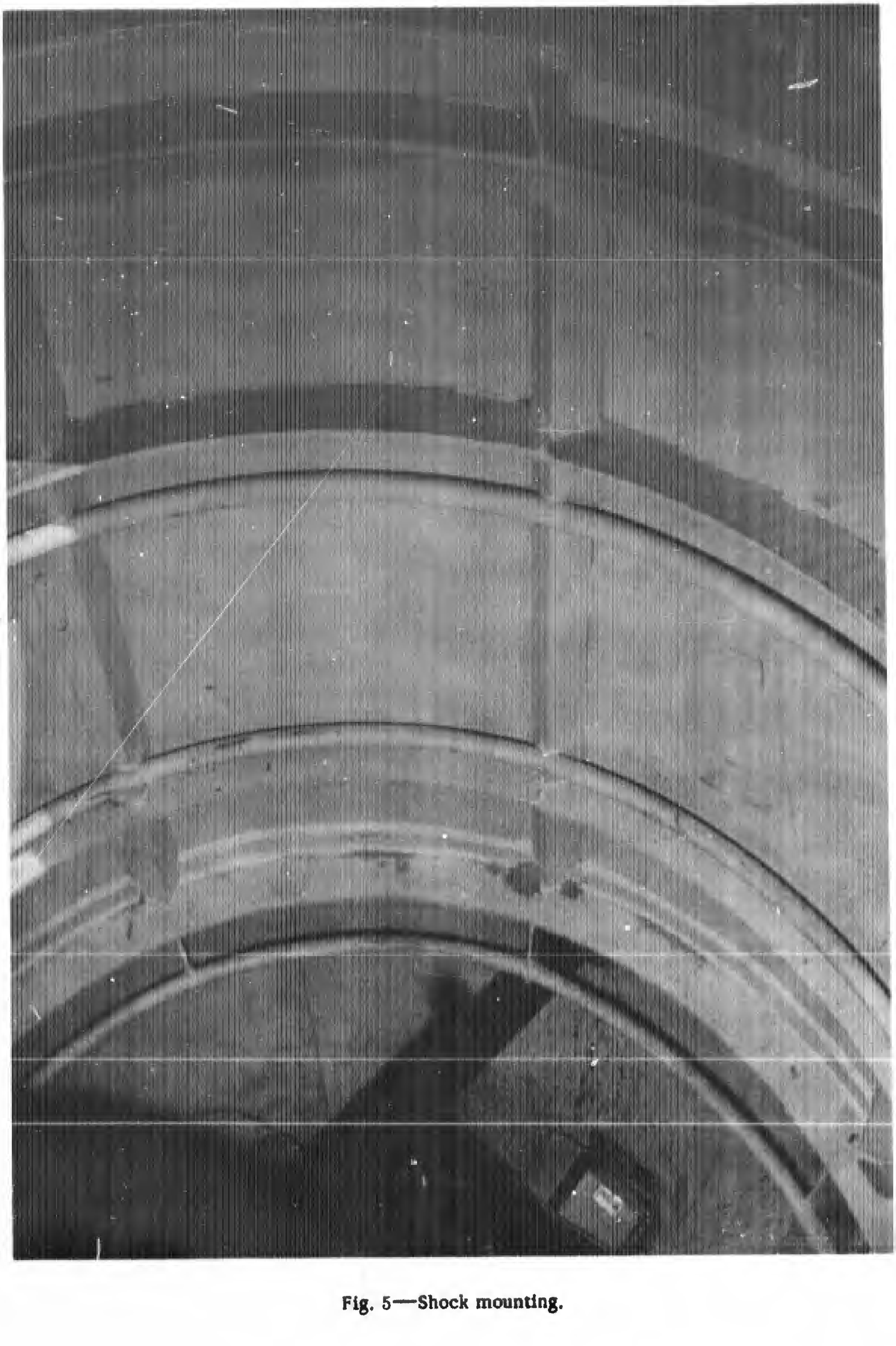

Fig. 5—Shock mounting.

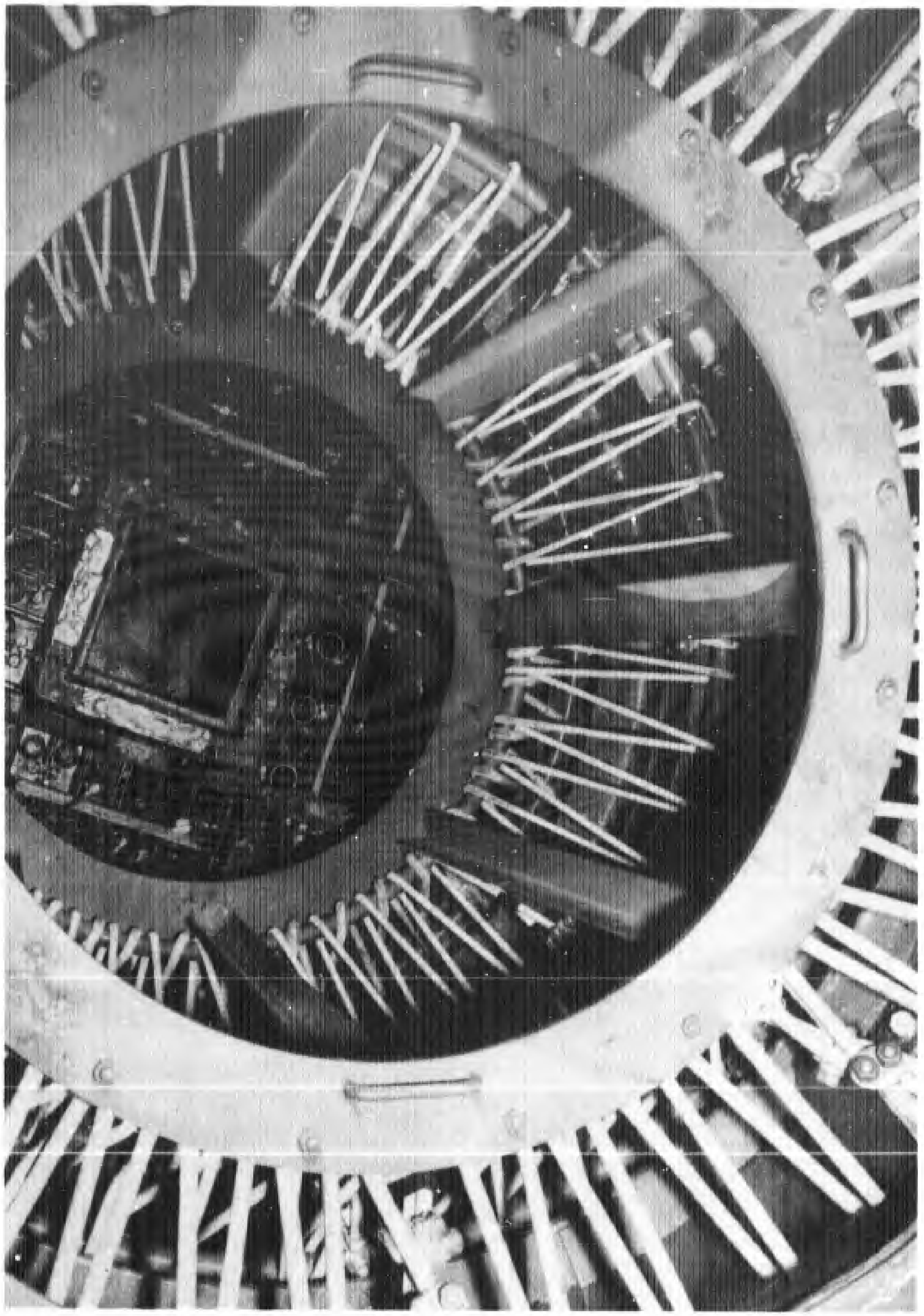

Fig. 6—Cage in shock mount.

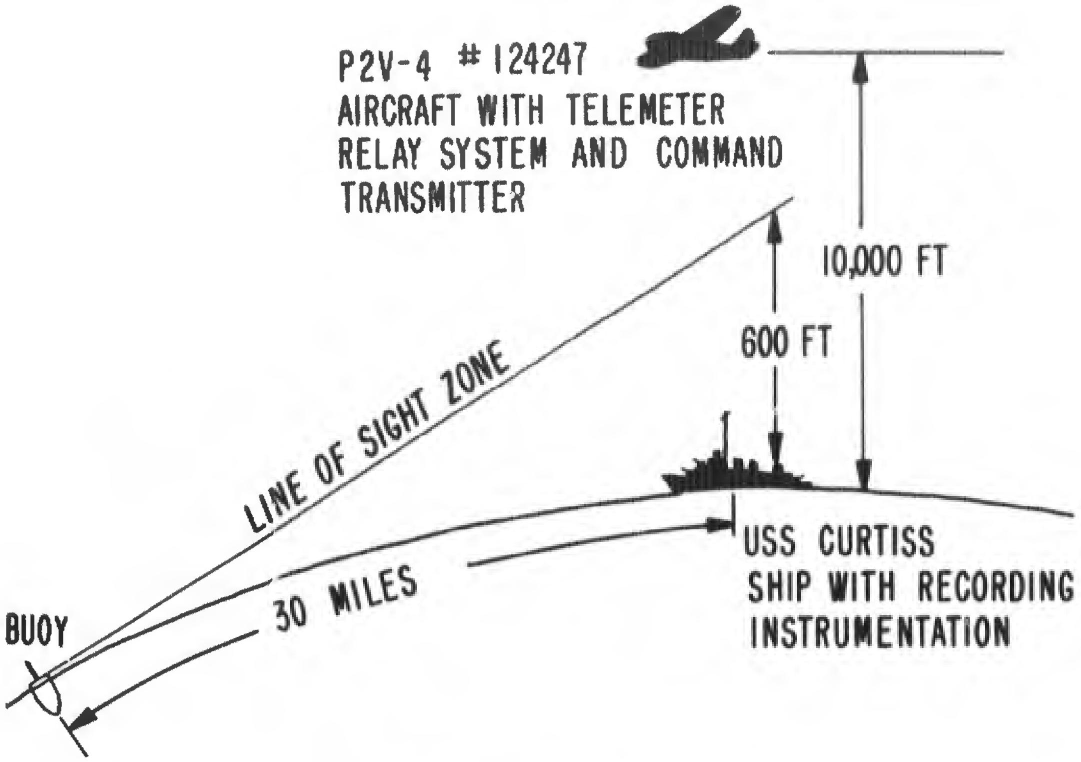

Fig. 7 — Telemetering plan.

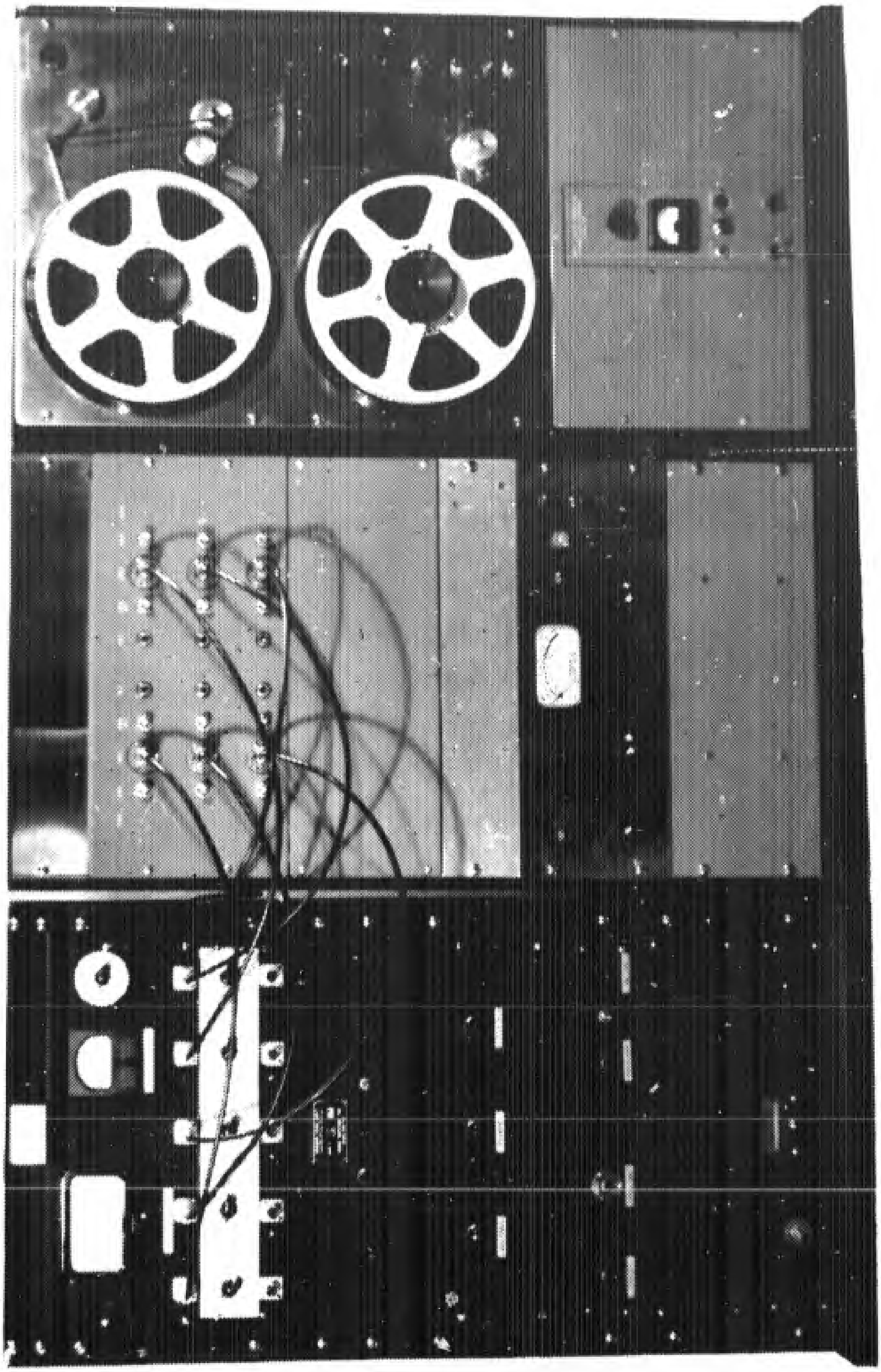

Fig. 8—Horizons system.

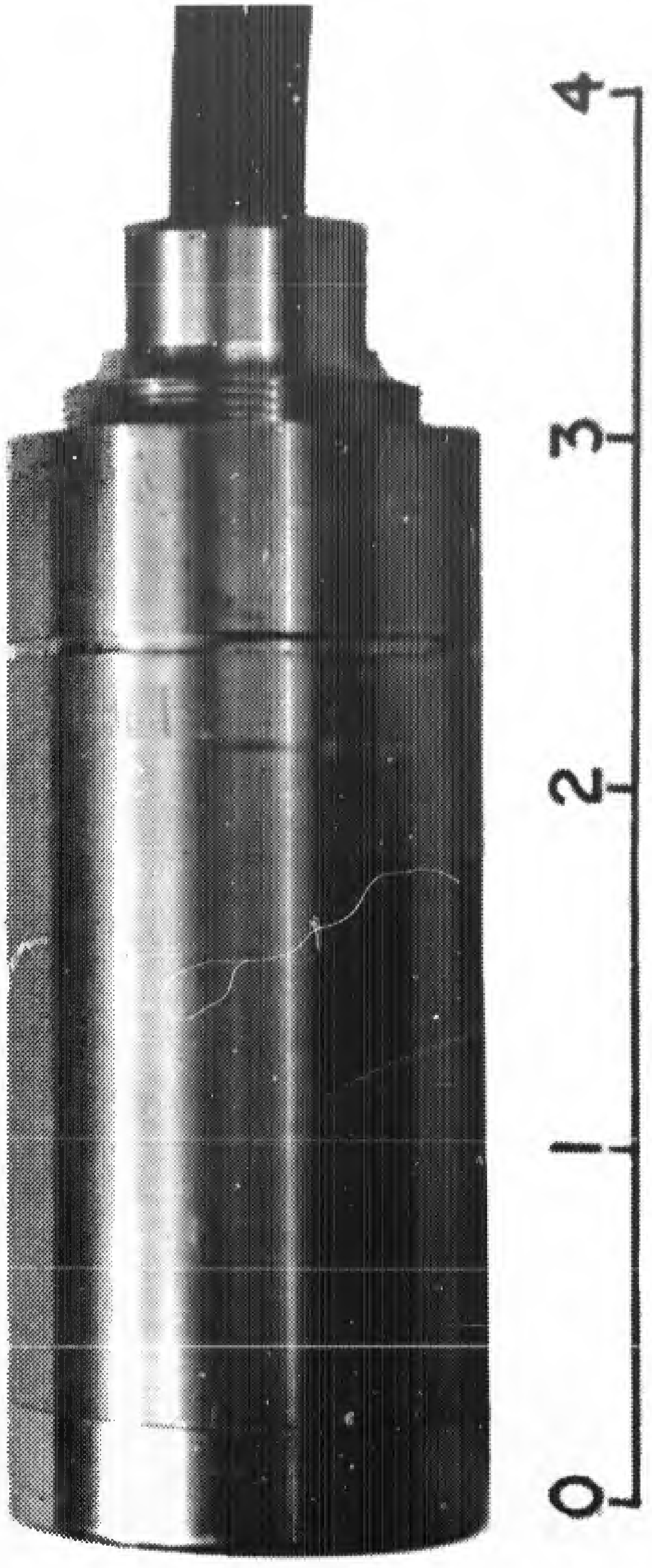

Fig. 9—Blast gauge.

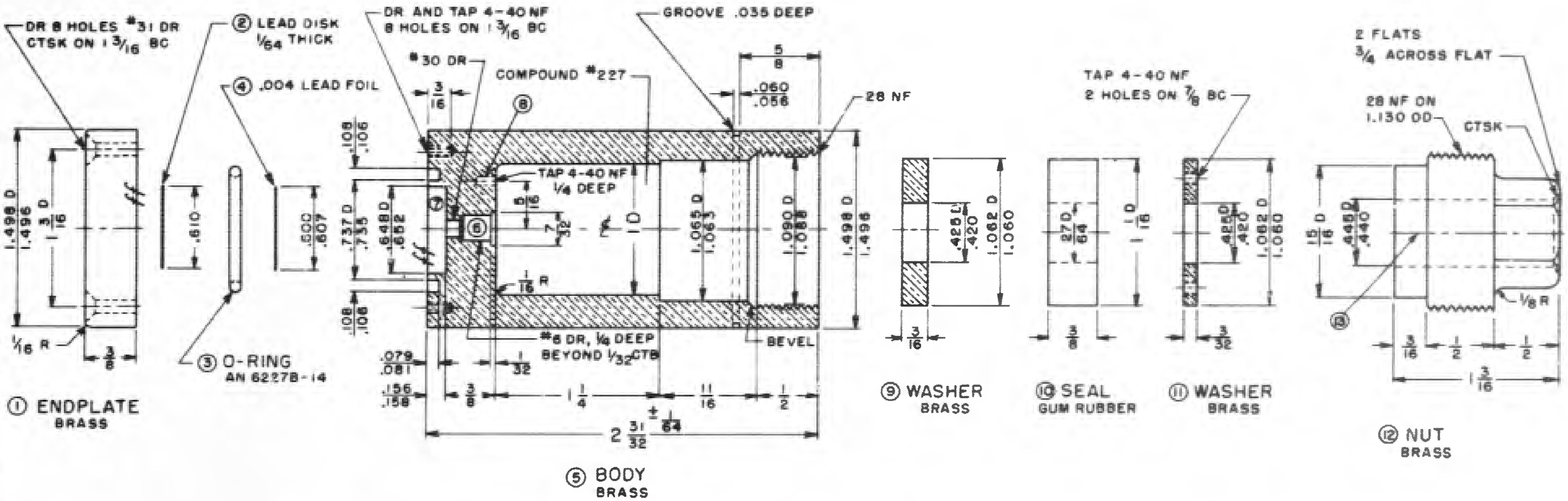

| No. | Name | Mat. | Size | No. Req. |
|---|---|---|---|---|
| 1 | Endplate | Brass | $1^{1}/_{2}$-in. dia. × $^{3}/_{8}$ in. | 1 |
| | Screws | Brass | 4-40 NF × $^{1}/_{2}$ F.H. | 8 |
| 2 | Neoprene disk | | 0.610-in. dia. × $^{1}/_{64}$ in. | 1 |
| 3 | O-ring | Parker | AN 6227B-14 | 1 |
| 4 | Lead foil | | 0.605-in. dia. × 0.004 in. | 1 |
| 5 | Body | Brass | $1^{1}/_{2}$-in. dia. × 3 in. | 1 |
| 6 | Hermetic seal (high lead) from Electrical Industries, Inc. | | AB-60-TS | 1 |
| 7 | $BaTiO_3$ crystals (silver electrodes) (one crystal has $^{3}/_{32}$-in. hole at center) | | 0.60-in. dia. × 0.070 in. | 2 |
| 8 | Solder lug and stranded lead wire | | | 1 |
| 9 | Washer | Brass | $1^{1}/_{8}$-in. dia. × $^{3}/_{16}$ in. | 1 |
| 10 | Seal | Gum rubber | $1^{1}/_{6}$-in. dia. × $^{3}/_{8}$ in. | 1 |
| 11 | Washer | Brass | $1^{1}/_{8}$-in. dia. × $^{3}/_{32}$ in. | 1 |
| 12 | Nut | Brass | $1^{1}/_{4}$-in. dia. × $1^{1}/_{4}$ in. | 1 |
| 13 | Simplex cable No. F.O. 9251 | | | |

Fig. 10—Details of blast gauge.

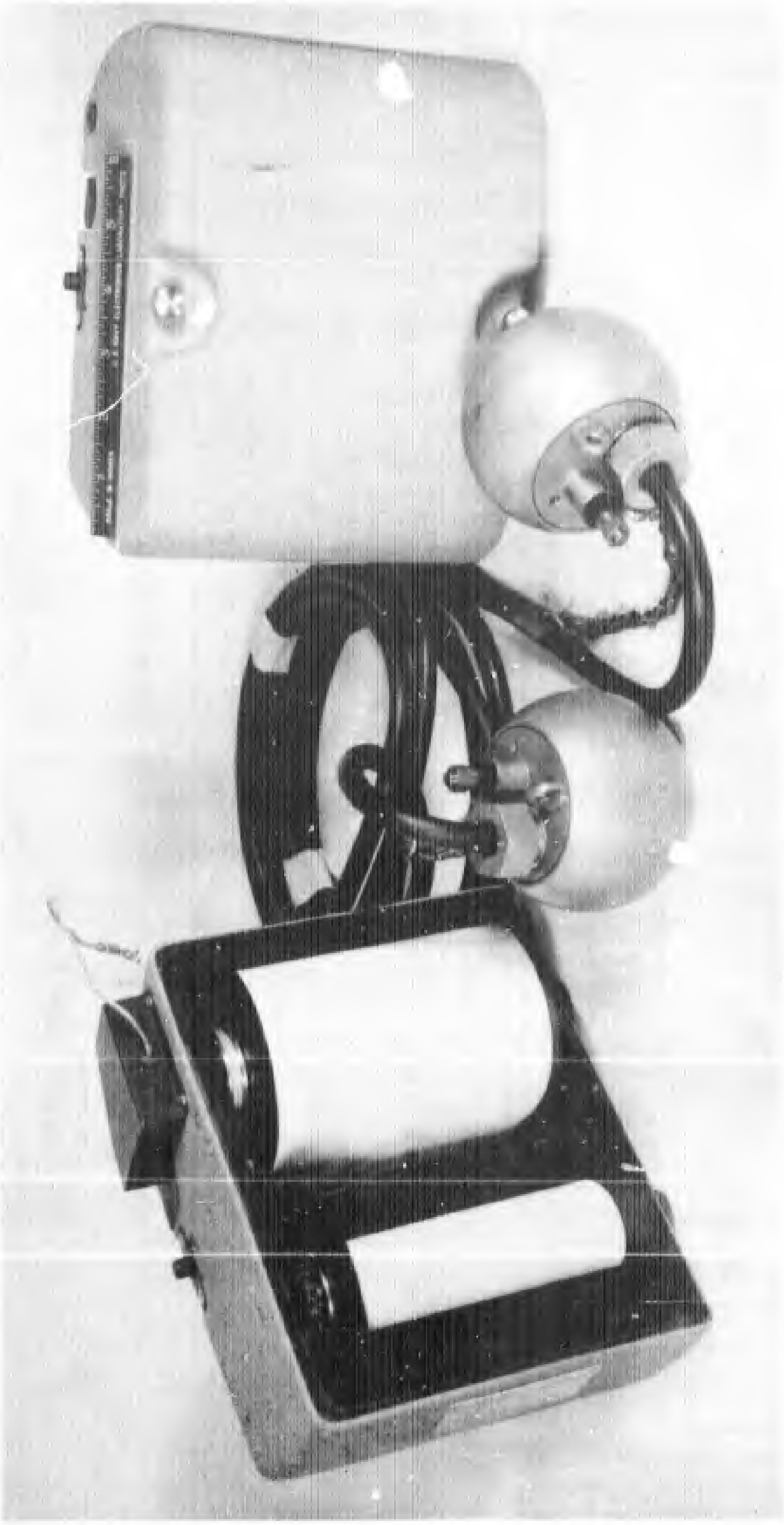

Fig. 11—Wiancko gauges and recorder.

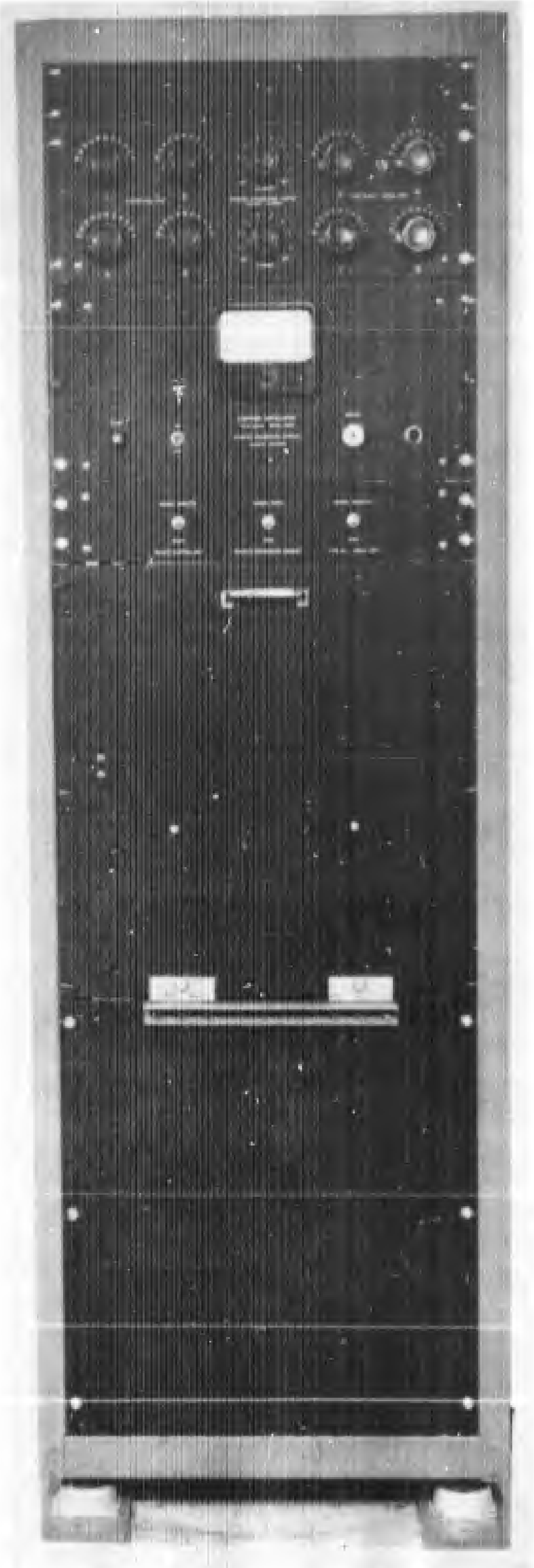

Fig. 12—Wiancko system (front view).

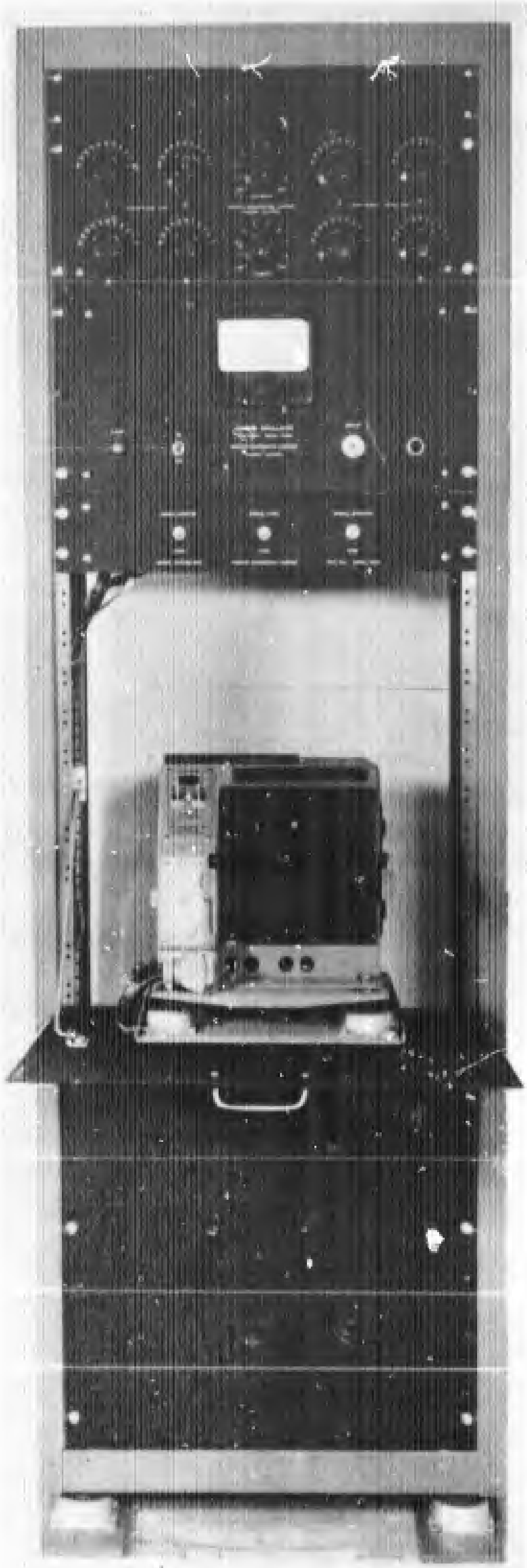

Fig. 13—Wiancko system (front view open).

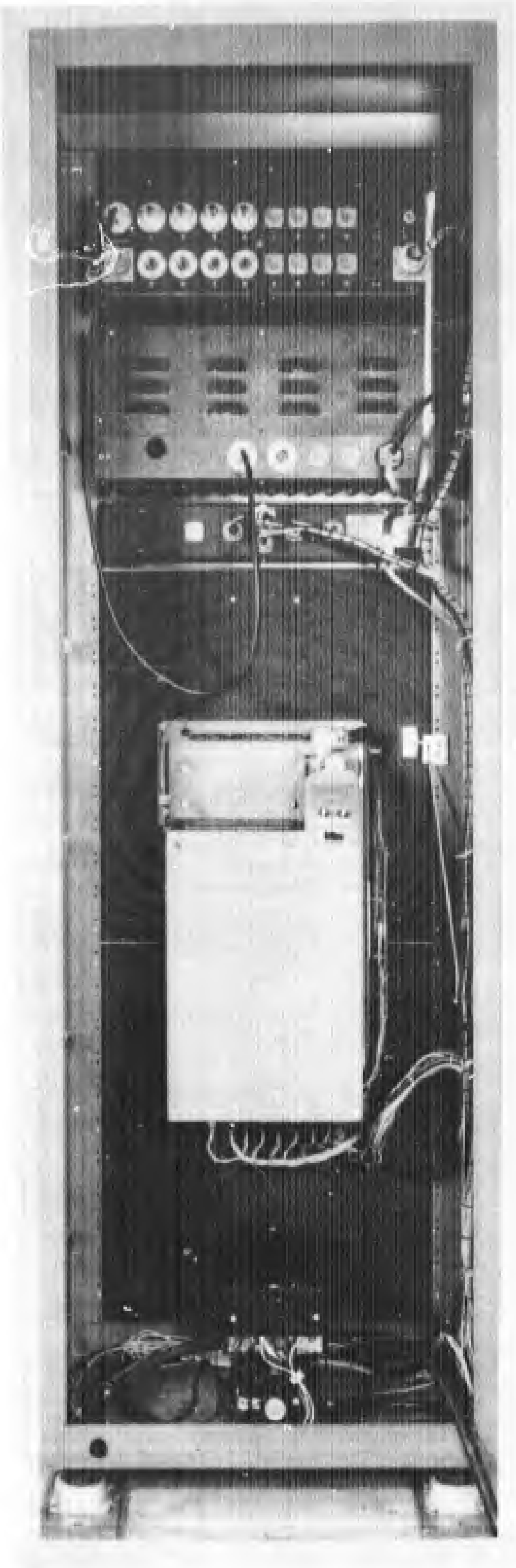

Fig. 14—Wiancke system (rear view).

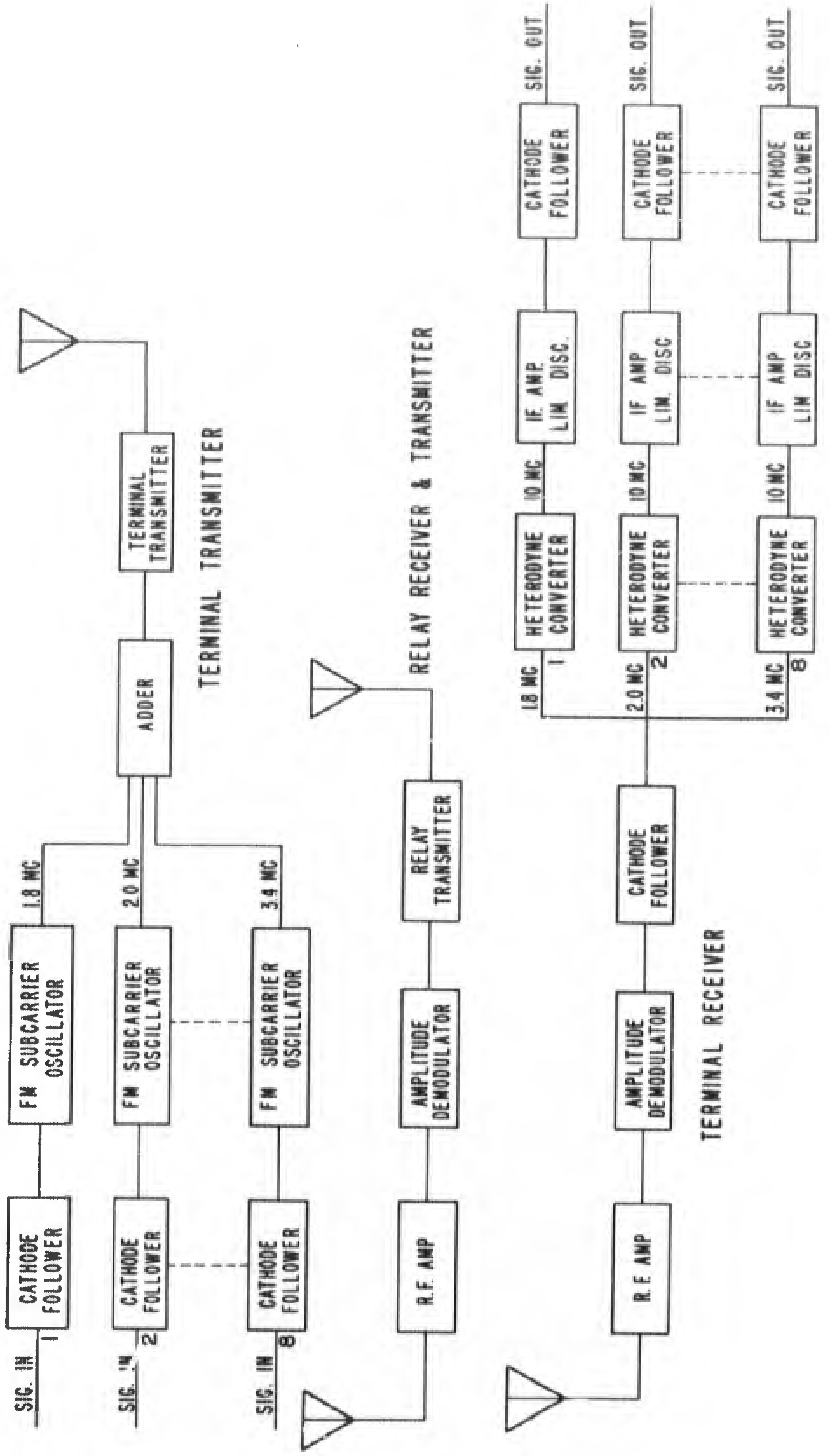

Fig. 15—Telemetering system.

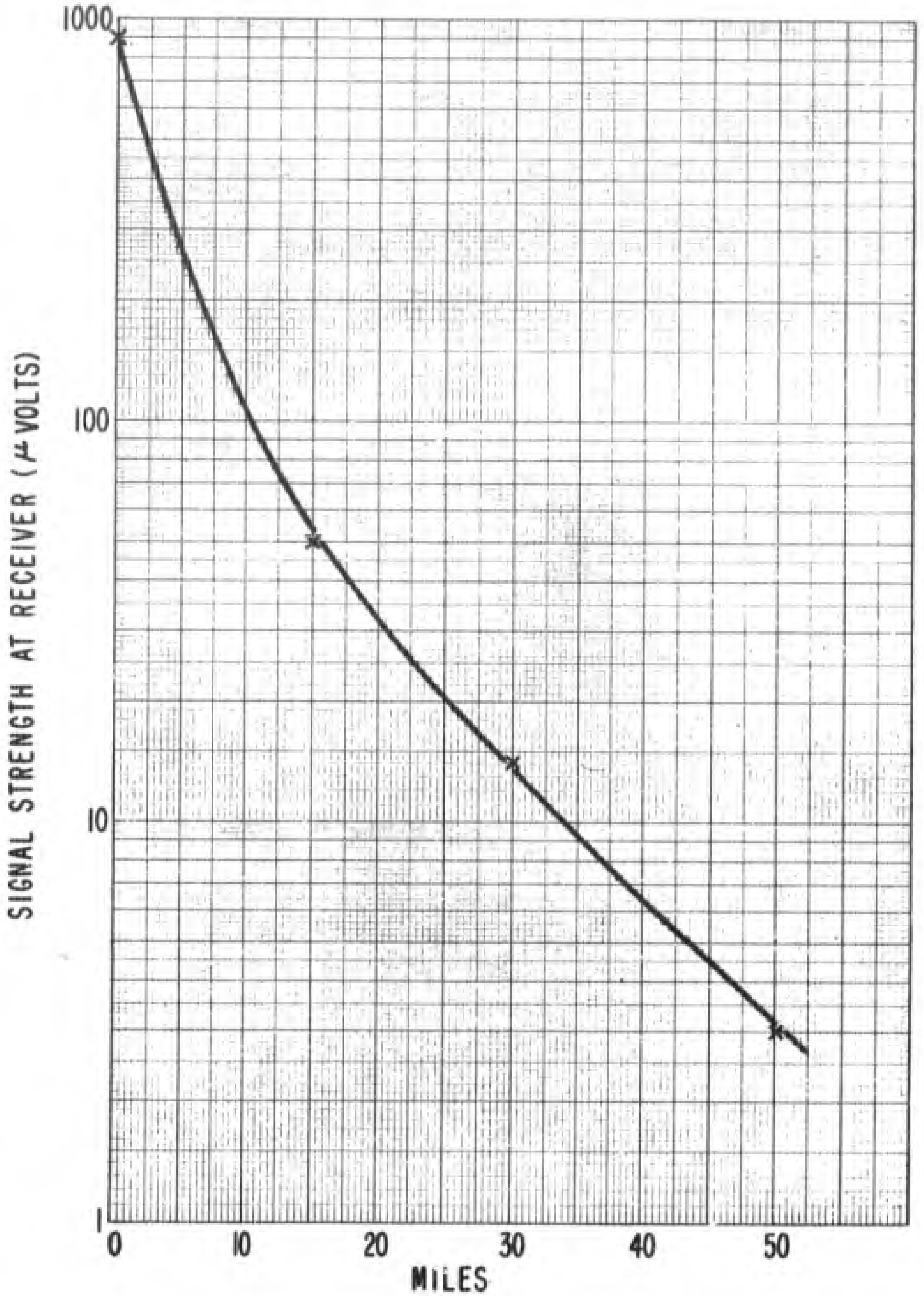

SIGNAL STRENGTH VS DISTANCE OF 255 MC
TRANSMITTER AT ALTITUDE OF 5,000 FT.

Fig. 16—Telemetering field-test results.

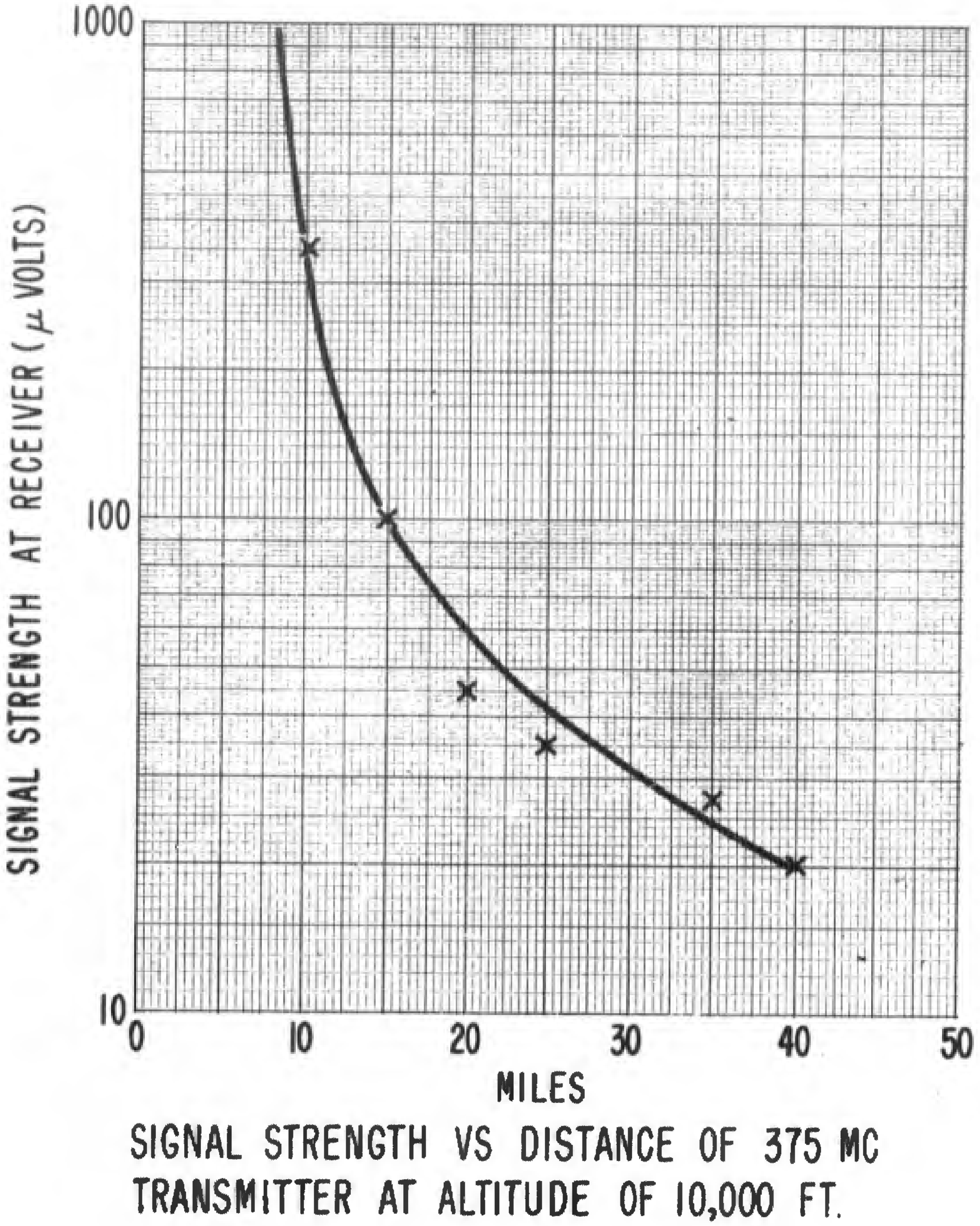

Fig. 17—Telemetering field-test results.

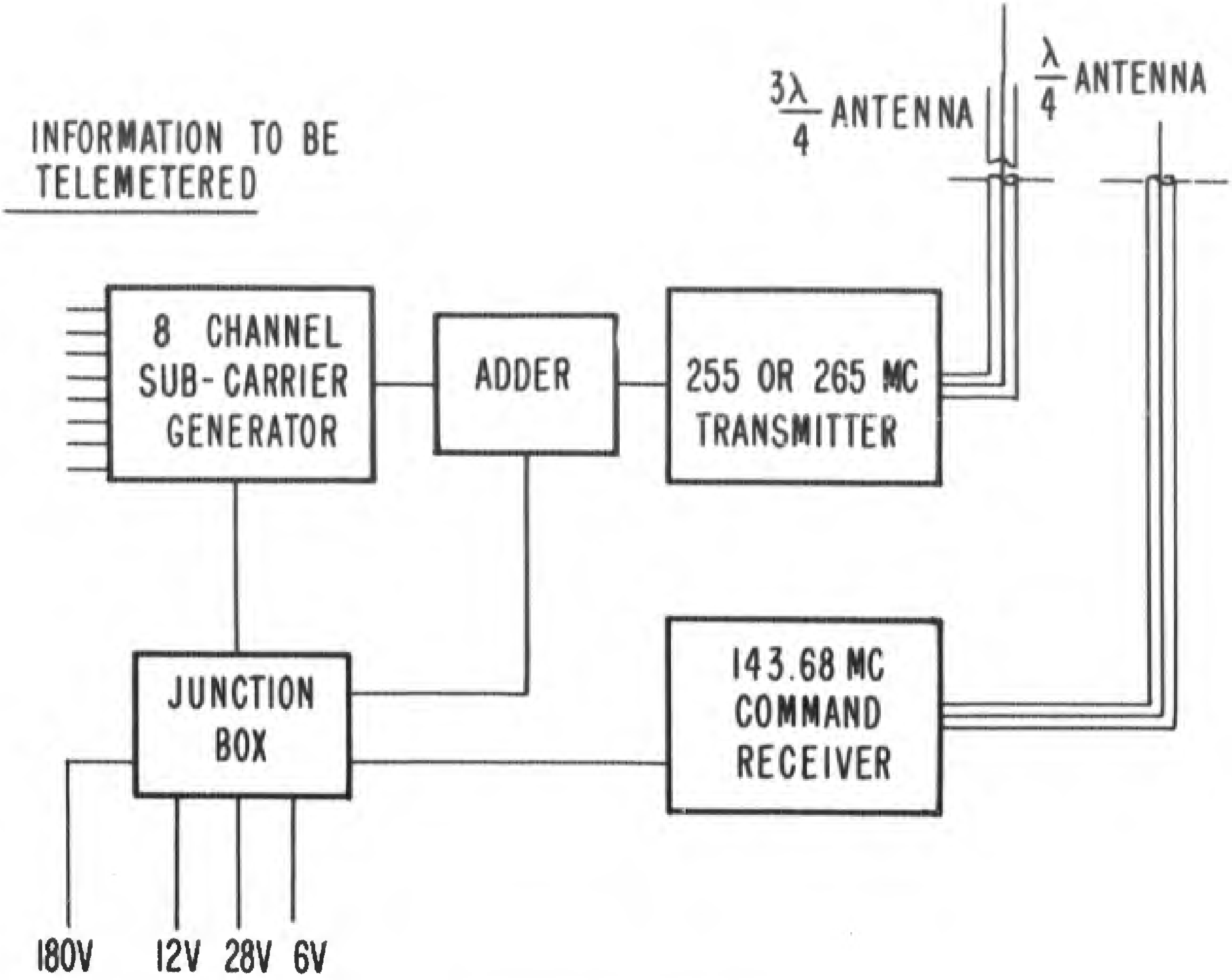

Fig. 18—Buoy telemetering system.

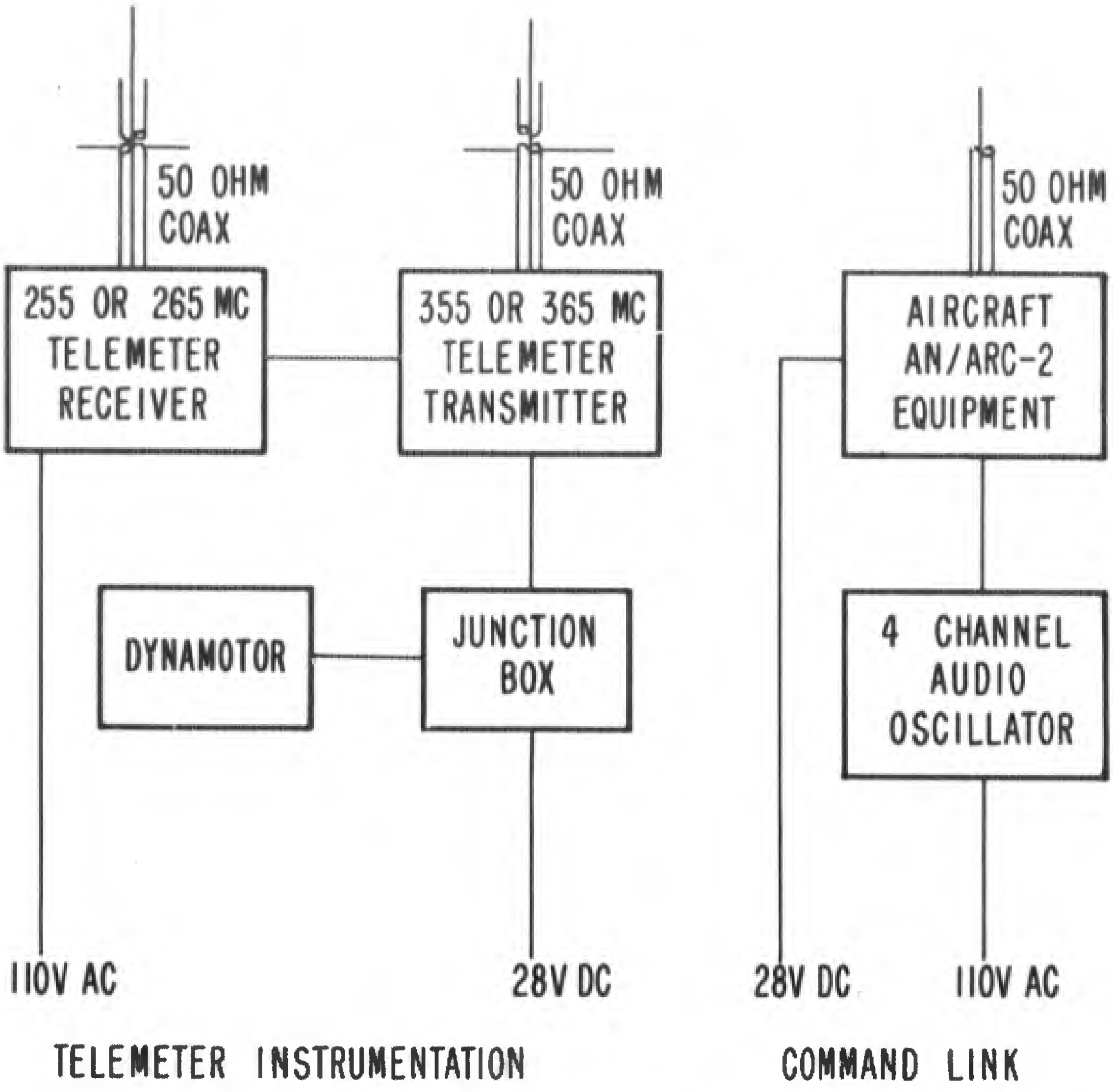

Fig. 19—Relay aircraft telemetering system.

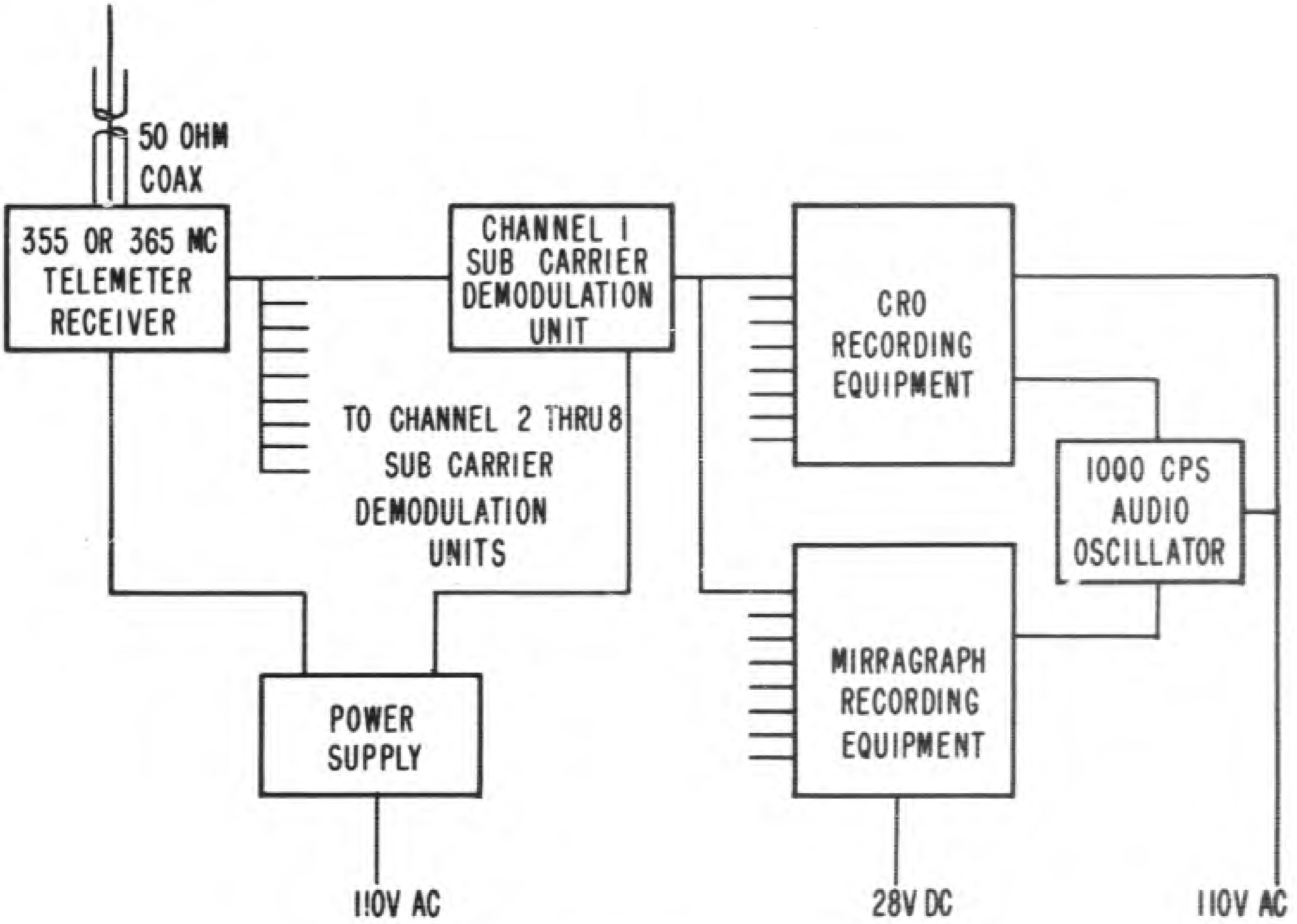

Fig. 20—Trailer telemetering and recording equipment.