GENERAL DECLASSIFICATION SCHEDULE

IN ACCORDANCE WITH
DOD 5200.1-R & EXECUTIVE ORDER 11652

THIS DOCUMENT IS:

____

Subject to General Declassification Schedule of
Executive Order 11652-Automatically Downgraded at
2 Years intervals- DECLASSIFIED ON DECEMBER 31, 1972

BY

Defense Documentation Center
Defense Supply Agency
Cameron Station
Alexandria, Virginia 22314

SECURITY MARKING

The classified or limited status of this report applies to each page, unless otherwise marked.
Separate page printouts MUST be marked accordingly.

CONFIDENTIAL

AFRPL–TR–66–140

(U) PERFORMANCE CHARACTERISTICS OF A CRYOGENIC TRIPROPELLANT SYSTEM

TECHNICAL DOCUMENTARY REPORT NO. AFRPL–TR–66–140

QUARTERLY PROGRESS REPORT NO. 5

MARCH 1 – MAY 31, 1966

Air Force Rocket Propulsion Laboratory
Research and Technology Division
Air Force Systems Command
United States Air Force
Edwards, California

Project No. 3058, Program Structure No. 750G

Prepared Under Contract No. AF 04(611)-10535

United Aircraft Research Laboratories

UNITED AIRCRAFT CORPORATION

EAST HARTFORD, CONNECTICUT

C. R. MILLER
D. J. McFARLIN
T. J. SADOWSKI

CONFIDENTIAL

CONFIDENTIAL

AFRPL-TR-66-140

(U) PERFORMANCE CHARACTERISTICS OF A CRYOGENIC TRIPROPELLANT SYSTEM

TECHNICAL DOCUMENTARY REPORT
NO. AFRPL-TR-66-140

QUARTERLY PROGRESS REPORT NO. 5

MARCH 1 – MAY 31, 1966

Air Force Rocket Propulsion Laboratory
Research and Technology Division
Air Force Systems Command
United States Air Force
Edwards, California

Project No. 3058, Program Structure No. 750G

Prepared Under Contract No. AF 04(611)-10535

United Aircraft Research Laboratories

UNITED AIRCRAFT CORPORATION

EAST HARTFORD, CONNECTICUT

This document contains information affecting the national defense of the United States within the meaning of the Espionage Laws, Title 18, U.S.C., sections 793 and 794. The transmission or the revelation of its contents in any manner to an unauthorized person is prohibited by law.

GROUP-4
Downgraded at 3 year intervals;
declassified after 12 years

C. R. MILLER
D. J. McFARLIN
T. J. SADOWSKI

NO. OF PAGES 35

COPY NO. [redacted]

CONFIDENTIAL

FOREWORD

An exploratory development program directed toward determination of the performance characteristics of the Be-O_2-H_2 propellant combination in tribrid rocket motors having thrust levels up to 1000 lb is being conducted by the United Aircraft Research Laboratories. This program was initiated on March 1, 1965, and the work accomplished and the results obtained during the period March 1 through May 31, 1966, are described herein.

Included among those who cooperated in the research and preparation of this report were: Mr. J. R. Keilbach (Program Manager), Supervisor, Rocket Technology Group; and Messrs C. R. Miller, D. J. McFarlin, and T. Sadowski of the Research Laboratories' staff.

This program is sponsored by the Air Force Rocket Propulsion Laboratory, Research and Technology Division, Air Force Systems Command, United States Air Force, Edwards Air Force Base, California. The Contracting Officer is Mrs. Mary M. Racovich/FTMKR-4, and the Project Officer is W. E. Spangler, Lt., USAF/RPRE. The Air Force Program Structure Number is 750G and the AFSC Project Number is 3058.

This document is the Contractor's Report Number E910331-20 and, with the exception of the title, is classified Confidential because it reveals (1) the Air Force interest in beryllium as a propellant and (2) the thrust levels, design configurations, and exhaust characteristics of the tripropellant thrust chambers under consideration.

ABSTRACT

(This Abstract is classified Confidential.)

The United Aircraft Research Laboratories under contract with the United States Air Force are conducting an investigation to determine the performance characteristics of the Be-O_2-H_2 propellant combination in tribrid thrust chambers having thrust levels up to 1000 lb. This report summarizes the work performed during the period March 1, 1966, to May 31, 1966.

During this report period Supplemental Agreement No. 2 to the contract was executed. This document revises the contract reporting requirements, updates the Security Requirements Check List (DD Form 254) and reduces the scope of the research program. The modifications generally affecting the scope of the program include termination of theoretical studies of the expansion process of two-phase exhaust streams, deletion of thrust chamber tests at the 100 psia chamber pressure level, and reduction in the minimum number of thrust chamber firings. These contract modifications will permit use of the remaining contract funds solely for acquisition of data on beryllium-grain tribrid motor performance.

Testing of the beryllium-grain tribrid thrust chambers continued during this report period. Three test firings of beryllium-grain motors were conducted, and the results indicate that the major technical difficulties associated with grain regression rate measurement, exhaust nozzle throat and chamber wall erosion and flame mixer durability have been eliminated.

TABLE OF CONTENTS

Page

LIST OF SYMBOLS

A	Area, $in.^2$
C_F	Thrust coefficient, dimensionless
c^*	Characteristic exhaust velocity, ft/sec
D	Grain port diameter, in.
F	Thrust, lb
I_{sp}	Specific impulse, sec
L	Length, in.
P	Pressure, $lb/in.^2$
$\dot{r}$	Grain regression rate, in/sec
t	Time, sec
$\dot{w}$	Weight flow rate, lb/sec
ΔW_{gr}	Total propellant grain weight loss during motor firing, lb
η_{c^*}	Characteristic exhaust velocity efficiency, dimensionless
η_{C_F}	Thrust coefficient efficiency, dimensionless
$\eta_{I_{sp}}$	Specific impulse efficiency, dimensionless
ρ	Density, $lb/in.^3$

<u>Subscripts</u>

b	Burning
c	Chamber condition
f	Final condition
gr	Grain
H_2	Hydrogen

o	Initial condition
O_2	Oxygen
p	Propellants
t	Throat condition

Superscripts

$-$	Time-average value

INTRODUCTION

The United Aircraft Research Laboratories are conducting an exploratory development program under Air Force Contract AF 04(611)-10535 in an attempt to determine the delivered performance capabilities of the beryllium-oxygen-hydrogen propellant combination in rocket motors having thrust levels up to 1000 lb. The technique by which the introduction of metal into tripropellant thrust chambers is to be accomplished during this program is based on the tribrid concept, in which beryllium particles are injected into a hydrogen-oxygen reaction zone through pyrolysis of a highly-metallized solid fuel grain.

The program is divided into two tasks. Task I includes (1) laboratory investigations to determine the effects of tripropellant grain formulation and processing variables on the maximum attainable grain metal loading, with 95 wt % beryllium as the current goal and (2) fabrication of tribrid propellant grains for use in rocket motor firings to be conducted under Task II of the program.

Task II comprises (1) analytical studies of the manner and extent to which combustion chamber stoichiometry, exhaust stream particle size, and exhaust nozzle size and geometry affect the delivered performance of $Be-O_2-H_2$ rocket thrust chambers and (2) experimental evaluations of the ignition, combustion, and expansion characteristics; hardware durability; and delivered performance of tribrid $Be-O_2-H_2$ rocket motors designed for thrust levels up to 1000 lb.

Contract modifications were made during this report period as set forth in Supplemental Agreement No. 2, which revises the reporting requirements, updates the Security Requirements Check List (DD Form 254) and reduces the scope of the research program. Indications of manner in which these modifications affect the program scope are presented herein together with discussions of the work accomplished and the results obtained. during the period March 1 through May 31, 1966.

SECTION 1

GRAIN FORMULATION AND PROCESSING STUDIES

The grain formulation and processing studies are completed, as discussed in Ref. 1. Further, the reduction in the scope of the experimental program resulting from contract modifications is such that the present inventory of beryllium grains is sufficient for the planned program of thrust chamber firings. Therefore, all grain fabrication activities have been terminated, and this phase of the research program is considered to be completed. Ten aluminum grains (95 wt % Al-5 wt % Kel F-800) and nineteen beryllium grains (90 wt % Be-10 wt % Kel F-800) were fabricated.

SECTION 2

ANALYTICAL STUDIES OF TWO-PHASE EXHAUST FLOWS

The objectives of the analytical phase of this program are (1) to determine the effects of pertinent thrust chamber design and operating variables on the delivered performance of the Be-O_2-H_2 propellant system in tribrid rocket motors and (2) to provide a basis for determination of the source of thrust chamber performance deficiencies observed experimentally during this program. Studies related to the first of these objectives have been terminated according to Supplemental Agreement No. 2 in order that the remaining contract funds can be expended in acquisition of experimental data on the performance characteristics of beryllium-grain tribrid thrust chambers. Nonetheless, prior to the termination of these studies a number of flow calculations were carried out to show the effects of propellant mixture ratio and engine thrust level on delivered specific impulse (see Ref. 1). The results of the abbreviated parametric study indicate that the optimum performance mixture ratio does not necessarily coincide with that predicted on the basis of thermochemical considerations alone when two-phase flow effects are taken into account; the optimum mixture ratio shifts to higher values of percentage hydrogen for the two-phase flows. However, as the engine thrust level increases both the delivered performance and the optimum performance mixture ratio approach the values obtained from thermochemical calculations in which two-phase flow is not considered.

The second objective of this phase of the program is to be accomplished through analyses of thrust chamber performance using values of thrust chamber design and operating variables, including exhaust product particle sizes, derived as results of the rocket motor test firings of this program. Thus work toward this objective will be initiated in the next report period, during which the required experimental data are expected to be available.

SECTION 3

EXPERIMENTAL STUDIES OF THRUST CHAMBER PERFORMANCE

A program of rocket test firing is being conducted to evaluate the performance of the $Be-O_2-H_2$ tripropellant system. This experimental program is directed toward achieving high delivered specific impulse with $Be-O_2-H_2$ propellants in thrust chambers using the tribrid mode of injection. It includes the following:

1. Preliminary test firings of H_2-O_2 thrust chambers to evaluate primary injector performance and to determine the minimum pregrain mixing lengths required for the attainment of high pregrain C* efficiencies in tribrid rocket motors.

2. Supplementary firings of $Al-O_2-H_2$ tribrid rocket motors to evaluate postgrain mixer and secondary hydrogen injector configurations and grain regression rate measurement and particle sampling techniques.

3. Test firings of $Be-O_2-H_2$ tribrid rocket motors at various thrust levels and at a nominal chamber pressure level of 500 psia under sea level exhaust conditions in an attempt to determine the range of thrust chamber operating variables over which stable combustion and high delivered propellant performance can be obtained.

Both the preliminary and supplementary series of thrust chamber firings are completed (see Refs. 2 and 3), and the series of $Be-O_2-H_2$ tribrid motor firings is in progress.

Test Apparatus

The experimental thrust chamber performance tests are being conducted at the UARL Rocket Test Facility shown in Fig. 1. The facility includes fuel and oxidizer pressurization and supply systems, atmospheric-exhaust thrust stands, and an enclosed thrust stand with an associated exhaust gas scrubbing-filtering system. The control building houses data recording and electrical control systems.

Thrust Chamber Configurations

The general thrust chamber configuration currently employed in the beryllium-grain tribrid motor tests is shown in Fig. 2. The basic motor is composed of a six-concentric-element, water-cooled primary injector, a pregrain combustion chamber, a grain section, a postgrain flame mixer, a constant-area mixing section, a convergent section, a secondary hydrogen injector, and an exhaust nozzle. The grain section is designed to receive three propellant grain elements. The flame mixer at the grain exit plane is employed to induce impingement and mixing of the port flow from the three grain elements prior to the injection of the secondary hydrogen. (The importance of postgrain mixing and the "quenching" effect of cold hydrogen injection on the Be-H_2O reaction is discussed in Refs. 2 and 4.) The nozzle holder is designed to permit installation of exhaust nozzle inserts of different materials such as graphite, beryllium oxide, and tungsten.

The basic motor design ensures facility of modification or addition of components where indicated by test results. In fact, the thrust chamber configuration shown in Fig. 2 was established largely on the basis of the results of the supplementary aluminum-grain and early beryllium-grain tests. The major modifications to the original configuration (see Ref. 5) are associated with the design of the grain section, the postgrain mixer/mixing section, the particle sampling probe installation, and the grain regression rate probes. These modifications are discussed in detail in the section entitled "Beryllium-Grain Motor Tests."

Exhaust Gas Scrubber-Filtering System

The toxic nature of the exhaust products from beryllium-fueled thrust chambers makes necessary their retention or regulated discharge so that maximum allowable airborne concentrations of beryllium are not exceeded in inhabited areas. Thus beryllium-grain motor tests are conducted using the exhaust gas scrubbing-filtering system shown in Fig. 3. This system is composed of a thrust stand enclosure, an afterburner, a scrubber section, a filter section, and a blower. A view of the thrust stand enclosure and afterburner sections of the system is presented in Fig. 4. Air samplers are used to monitor the test site and downwind areas before, during, and after test firings with beryllium-containing propellants. A plot plan of the monitored area is shown in Fig. 5.

Data Reduction Procedures

Because of uncertainties regarding instantaneous values of solid propellant flow rate, it was necessary to calculate thrust chamber performance solely on the basis of time-averaged values of thrust chamber operating parameters for many of the tribrid motor tests previously reported under this contract. However, attempts to obtain measurements of instantaneous grain regression rates were successful in many of the more recent tests, and performance calculations based on instantaneous values of thrust chamber operating parameters are therefore possible. For purposes of comparison, performance values were determined on the basis of both instantaneous and time-averaged values of the thrust chamber operating parameters where possible.

In the time-averaging method, values of the thrust chamber operating parameters required for performance determinations, with the exception of the solid fuel flow rate, were determined using the procedures described in Ref. 3. The time-averaged solid propellant flow rate was determined by dividing the total propellant grain weight loss by the burning time. Use of this solid fuel flow rate instead of the "expanded" solid fuel flow rate, as was done previously (cf. Refs. 1 through 3), is necessary to establish a common basis for comparison between time-average and instantaneous performance values, because there is no fully consistent way of correcting the instantaneous solid propellant flow for the grain residue left in the post-grain sections of the combustion chamber. Performance values obtained in this manner are conservative to an extent dependent on the amount of residue deposited in the combustion chamber during firing.

In calculating the time-average regression rate of the propellant grain surface, it was assumed that the regression rate was invariant with length along the grain, and that the solid propellant flow rate was constant with time. The time-average regression rate was calculated using the following relationship:

$$\bar{r} = \frac{\Delta W_{gr}}{3\rho_{gr} \pi \bar{D} L_{gr} t_b} \qquad (1)$$

where

$$\bar{D} = 2/3 \left[\frac{D^3{}_f - D^3{}_o}{D^2{}_f - D^2{}_o} \right] \qquad (2)$$

For the instantaneous performance calculation the instantaneous solid fuel weight flow is given by the relation

$$\frac{dW_{gr}}{dt} = 6\pi\rho_{gr} L_{gr} \bar{r}_i \frac{d\bar{r}_i}{dt} \qquad (3)$$

where

$$\frac{d\bar{r}_i}{dt} = \dot{\bar{r}}_i \qquad (4)$$

and

$$\frac{dW_{gr}}{dt} = \dot{W}_{gr} \qquad (5)$$

represent, respectively, the length-average instantaneous regression rate and the instantaneous solid propellant weight flow rate. To determine values of the length-average port radius, the values of port radius obtained from regression rate probe measurements were plotted against grain length at several values of time; the areas under the curves were determined by integration using a planimeter; and these areas were divided by the grain length. The values of length-average port radius were then plotted against time. The instantaneous value of the regression rate was then determined by measuring the slope of the grain port radius versus time curve.

Although the tribrid thrust chambers were instrumented for measurement of combustion chamber pressure at positions both upstream and downstream of the grain chamber, only the downstream chamber pressure was used in determining delivered performance.

Beryllium-Grain Motor Tests

Three thrust chamber firings (B-4, B-5, and B-6) were conducted during this report period in continuation of the series of beryllium-grain tribrid rocket tests. These test firings and the data reduced to date are discussed in the following paragraphs. Also included in these paragraphs is a discussion of Test B-3, which was conducted at the close of the preceding report period. The thrust chamber operating conditions and performance parameters determined for the three test firings conducted during this report period are presented in Table I together with the data obtained in previous beryllium-grain motor tests.

Beryllium-Grain Test B-3

Because reduced data for Test B-3 were not available at the close of the preceding report period, it was possible to include in Ref. 3 only a preliminary discussion of the test results. A more complete discussion of this test is presented below.

The thrust chamber configuration employed in Test B-3 is shown in Fig. 6. The flame mixer was designed to provide premixing of hydrogen and oxygen in a circumferential plenum within the mixer body. The premixed injectants were introduced at the grain exit plane through twelve ports, four ports located at each grain exit as shown in Fig. 7.

During the test firing, the chamber pressure was monitored on a digital volt meter and was observed to rise normally to a level of approximately 540 psia and then suddenly decay, indicating a chamber leak of substantial proportions. Upon opening the thrust stand enclosure, it was found that escaping combustion products had burned through the pressure tap lines and the regression rate probe, thermocouple and load cell cabling. A hydrogen line feeding the flame mixer had burned off, thus allowing hydrogen to escape and burn within the enclosure. Subsequent examination of the reduced data revealed that the damage to the instrumentation cabling and chamber pressure lines occurred during the early stages of the test firing and was of such a nature and extent as to render impossible the calculation of meaningful thrust chamber performance. With the lack of any conclusive evidence to the contrary, the possibility of a flash back into the plenum and lines of the premix flame mixer must be considered as a likely cause of the thrust chamber failure. Examination of the flame mixer revealed that the plenum in the area of the burned out hydrogen feed line was severely eroded. Although it is quite possible that this could have resulted after failure of the feed line permitted chamber gases to flow out through the plenum, the possibility that combustion within the plenum and feed line was the primary cause of the failure cannot be excluded. The nature of the failure and the lack of data preclude any conclusive explanation of its cause; however, the likelihood of flashback and the unsatisfactory performance associated with earlier premix flame mixer configurations are considered sufficient reasons to eliminate this type of mixer from further consideration.

Beryllium-Grain Motor Test B-4

The thrust chamber configuration used in Test B-4 is shown in Fig. 2. The repeated failure of the flame mixer configurations designed to inject premixed propellants and the more reliable performance of the three concentric-element injector configuration used in Test B-2 (see Ref. 3) prompted selection of the latter for use in Test B-4. The details of this mixer are shown in Fig. 8.

The severe chamber wall erosion/burnout experienced in previous tests dictated redesign of the postgrain mixing section of the thrust chamber. In an attempt to avoid recurrence of such chamber failures, a 12-in. long constant-area, graphite-lined mixing section was installed between the flame mixer and the convergent section of the secondary hydrogen injector to reduce wall erosion due to particle impingement. An additional benefit expected as a result of this chamber modification is improved metal combustion efficiency due to increased particle residence time.

During the initial attempt to fire the thrust chamber, the test was automatically terminated after 0.2 sec of motor operation by an unsatisfied pressure switch in the mixer hydrogen feed system. Examination of the enclosed thrust stand after the firing revealed that a hydrogen feed line to the flame mixer was burned off and that escaping hydrogen and combustion products had caused extensive damage within the enclosure. The pressure tap lines were burned off, and the cabling for the load cell, thermocouples and regression rate probes were badly burned. A later examination of the recorded data showed that primary hydrogen had been admitted to the combustion chamber prematurely, apparently due to failure of the main fuel valve to seat properly in the closed position after pretest flow checks. It is presumed that a portion of the primary hydrogen flow entered the mixer hydrogen manifold and combined with entrapped air to form a combustible mixture and that when the thrust chamber igniter was energized the combustible mixture was ignited, thereby causing the manifold failure. Inspection of the thrust chamber revealed that no damage had occurred to the chamber components and that the grain elements were unaffected by the above firing. The chamber was reassembled for testing.

Difficulty was again experienced during an attempt to fire the motor, this time as a result of failure to satisfy the chamber pressure switch requirements. Examination of the pressure tap line revealed that it was partially restricted, resulting in a delay in the pressure build up at the pressure transducer. The test firing was automatically terminated after 0.35 sec when the pressure switch failed to detect the preselected chamber pressure level. The restricted line was replaced, and tests were performed to ensure that the time interval allowed for satisfying the pressure switch was sufficient. The motor was inspected and again prepared for testing.

The test firing duration was 5.6 sec. Subsequent examination of the thrust chamber revealed that none of the downstream components had suffered significant erosion, and a shadowgraph of the rokide-coated graphite nozzle insert taken after firing showed that the extent of throat enlargement was negligible. The lucite probes used for obtaining grain regression rate data were found to be melted within the probe holders. Eight of the regression rate probes failed to respond during the firing, and it is believed that the fusion of the lucite probes reduced the light transmission below the required signal level. The fusion of the lucite probes was attributed to the heating up of the propellant grain to approximately 300 F during the second aborted attempt to fire the motor. Examination of the propellant grain revealed that irregular regression had occurred at the upstream portions of the grain elements. The pregrain flow straightener ports were badly eroded during the firing, and it is believed that the irregular grain regression was a direct result of this failure. During reduction of the test data, it was determined that an oversize choked venturi had been installed in the oxygen supply line to the flame mixer. This installation error resulted in an oxygen flow rate that was considerably higher than the design value. The excess oxygen flow caused a significant reduction in chamber temperature in the postgrain mixing section and a concomitant reduction in metal combustion efficiency which manifested itself in a reduction of thrust chamber performance. Performance calculations based on time-averaged data yielded a c^* efficiency of 45 percent and an I_{sp} efficiency of 51.7 percent. Instantaneous values of the c^* and I_{sp} efficiencies were 62 percent and 63.4 percent, respectively. The pertinent data obtained during Test B-4 are presented in Table 1.

Beryllium-Grain Motor Test B-5

In spite of the fact that lucite probes had been used successfully for regression rate measurements during the aluminum-grain motor tests, the results of Test B-4 prompted concern regarding their continued use for beryllium-grain motor tests. Therefore, it was decided that both lucite and glass rods should be used as probes during Test B-5 in order to determine which probe material is more suitable. The thrust chamber configuration employed in Test B-5 was generally the same as in Test B-4 with the exception that the regression rate probes consisted of an alternating array of lucite rods and glass light pipes. The test duration was 5.9 sec. Examination of the thrust chamber after the firing revealed that the postgrain components had suffered no significant erosion, and a shadowgraph of the rokide-coated graphite nozzle insert showed no measurable throat enlargement. However, the pregrain flow straightener ports were eroded and the grain regression was somewhat nonuniform. All regression rate probes responded during the test, but inspection of the probes after the firing revealed that some of the lucite rods had melted within their holders, while all of the glass light pipes had remained intact. It was thus decided that glass light pipes would be employed in all future beryllium-grain motor tests. The time-average values of c^* and I_{sp} efficiencies were 79.2 percent and 69.8 percent, respectively. The instantaneous performance values calculated using values of thrust chamber operating parameters recorded 3.0 sec after ignition are $\eta_{c^*} = 84.8$ percent and $\eta_{I_{sp}} = 79.3$ percent, and at 4.5 sec the values of η_{c^*} and $\eta_{I_{sp}}$ are 89.7 and 84.8 percent, respectively. The data reduction calculations revealed that Test B-5 resulted in the highest thrust chamber performance yet attained with a tribrid motor during this program. This relatively high performance level assumes particular significance since it was attained at a mixture ratio more nearly approaching the theoretical optimum value (neglecting the effects of two-phase flow) than that of any previous test. Theoretically, optimum thrust chamber performance should be realized when the values of $\dot{W}_{O_2}/\dot{W}_{H_2}$ and $\dot{W}_{H_2}/\dot{W}_P$ are 1.75 and 0.259, respectively. The experimental values obtained during this test were $\dot{W}_{O_2}/\dot{W}_{H_2} = 2.33$ and $\dot{W}_{H_2}/\dot{W}_P = 0.225$. It is also of interest to note that the theoretical value of specific impulse corresponding to the experimental conditions obtained during Test B-5, was 420.5 sec compared to the optimum value of 432 sec. The pertinent performance values for Test B-5 appear in Table 1.

Beryllium-Grain Motor Test B-6

Test B-6 was conducted at the end of the report period following an extended delay imposed by a period of unfavorable wind conditions. Several changes in the thrust chamber design were made as a result of information obtained during Test B-5. Performance calculations for Test B-5 indicated that the grain regression rate was lower than that required to provide optimum stoichiometry between the injected metal and available oxidizer. Consequently, the grain length for Test B-6 was increased by 2 in. (see Fig. 9) and the distribution of oxygen flow between pregrain and postgrain injectors was altered in an attempt to provide the optimum mixture ratio. In order to prevent recurrence of the pregrain flow straightener erosion encountered in previous tests, a new configuration having larger inlet radii was installed in the thrust chamber. A further change was the installation of a particle probe system for use in extracting a sample of the combustion products at the exhaust nozzle entrance. The difficulty inherent in obtaining a true sample of particle-laden exhaust products is well known and lies principally in the inability to match velocities between exhaust flow and sampling flow (i.e., isokinetic sampling) by conventional techniques. Cognizance of this difficulty led to the decision to attempt particle sampling by the simple expedient of withdrawing the products through a 1/4-in. hole normal to the wall at the nozzle entrance plane as shown in Fig. 9. The deficiencies of this method are recognized, but are judged to be not grossly less representative than conventional nonisokinetic probes inserted in the exhaust stream. Figure 10 is a schematic representation of the exhaust particle sampling system. The sample tank is evacuated prior to a test firing. An automatic timing circuit is provided to open the inlet valve at a preselected time to allow the products to flow through the probe and then through the water-cooled section before entering the tank. The timing circuit also allows the selection of sampling duration. The trapped particles are deposited on a metal filter after the run and removed for analysis to determine particle size and composition. A sample bottle is provided in the system to allow a gas sample to be taken immediately following the run for chromatographic analysis in an attempt to establish the efficiency of combustion at the point of sampling. The temperature and pressure of the products entering the sample tank are recorded during sampling.

Post-firing examination of the thrust chamber components revealed that there had been no significant erosion of the postgrain chamber components and that the exhaust nozzle throat had suffered negligible erosion. Examination of the pregrain flow straightener showed that the enlarged radii had prevented erosion at the inlet of the ports, however, one of the ports was eroded at the exit. The appearance of the propellant grain indicated that, in spite of this minor failure, the regression of each of the three grain elements had been axisymmetric and relatively uniform in the axial direction. Apparently consistent grain regression rate probe signals were obtained during the run. Examination of the sequence-of-events record made during the test firing revealed that the particle sample tank valve had not opened. This failure was at first difficult to understand, as the valve operation was checked and found satisfactory both immediately before and immediately after the test firing. However, subsequent investigations have shown that an erratic thermal delay relay in the control circuit was the source of the problem. The circuit has been modified to include a more reliable valve timing device. Data for Test B-6 are presently being reduced and will be presented in the next report.

SECTION 4

CONCLUDING REMARKS

The results of the tribrid motor firings conducted during the report period indicate that considerable progress has been made in the elimination of the major problems encountered earlier in the experimental test program. Design changes have been instrumental in correcting such problems as (1) failure to obtain reliable grain regression rate measurements, (2) severe erosion/burnout of thrust chamber walls, (3) unsatisfactory postgrain mixer performance, and (4) exhaust nozzle throat section.

A series of diagnostic tests of the grain regression rate probes conducted during the aluminum-grain motor tests provided design criteria for the elimination of light transmission and electronic circuitry problems. However, when conducting beryllium-grain motor tests it was found that the lucite rod probes, which performed well in the aluminum-grain tests, were not completely reliable due to their relatively low fusion temperature. Therefore, a test (B-5) was conducted with an alternating array of lucite and glass rod probes in an attempt to determine which material is more appropriate. The results showed that glass rods are clearly superior in this application. Thus glass rods were selected for use in all remaining beryllium-grain motor tests.

The incorporation of a low-angle convergent section and a constant-area mixing section downstream of the grain exit has eliminated wall erosion/burnout in the downstream thrust chamber components. The greatly improved performance realized during Test B-5 indicates that improved postgrain mixing and metal combustion are promoted by the use of the flame mixer in conjunction with the constant-area mixing section. The use of rokide-coated graphite exhaust nozzles has thus far proved effective in eliminating the severe nozzle throat erosion problem encountered in previous tests.

Work planned for the next report period will include (1) attempts to obtain particle samples from the thrust chamber exhaust products for use in determinations of two-phase flow losses and (2) incorporation of water-cooled components into the thrust chamber for obtaining thrust chamber heat transfer data. The particle samples will be obtained by the method previously described using the probe system shown in Fig. 10. Attempts will be made to obtain heat transfer data at various thrust chamber locations such as the primary injector, the postgrain mixing section, downstream of the secondary hydrogen injection plane and at the exhaust nozzle throat. Figure 11 is an example of the manner in which water-cooling will be applied to the secondary injector section. The configuration of a water-cooled exhaust nozzle throat is shown in Fig. 12.

REFERENCES

1. Miller, C. R., and J. R. Keilbach: Performance Characteristics of a Cryogenic Tripropellant System. Quarterly Report No. 2, United Aircraft Research Laboratories Report D910331-8, Contract AF 04(611)-10535, June 1 through August 31, 1965. Confidential - Unclassified Title.

2. Miller, C. R., and J. R. Keilbach: Performance Characteristics of a Cryogenic Tripropellant System. Quarterly Report No. 3, United Aircraft Research Laboratories Report E910331-12, Contract AF 04(611)-10535, September 1 through November 30, 1965. Confidential - Unclassified Title.

3. Miller, C. R., D. J. McFarlin, and T. J. Sadowski: Performance Characteristics of a Cryogenic Tripropellant System. Quarterly Report No. 4, United Aircraft Research Laboratories Report E910331-16, Contract AF 04(611)-10535, December 1, 1965 through February 28, 1966. Confidential - Unclassified Title.

4. Keilbach, J. R., B. L. Iwanciow, and A. W. Blackman: An Applied Research Program Directed Toward the Performance Demonstration and Metal Feed System Investigation of the Tripropellant Concept. Final Report, United Aircraft Research Laboratories Report RPL-TDR-64-83, Contract AF 04(611)-9095, July 1964. Confidential - Unclassified Title.

5. Miller, C. R., and J. R. Keilbach: Performance Characteristics of a Cryogenic Tripropellant System. Quarterly Report No. 1, United Aircraft Research Laboratories Report D910331-4, Contract AF 04(611)-10535, March 1 through May 31, 1965. Confidential - Unclassified Title.

APPENDIX I

DISTRIBUTION LIST

COPIES	RECIPIENT
1	AFFTC (FTMKR-4) Edwards AFB, Calif. 93523
2	AFRPL (RPRE) Edwards, Calif. 93523
1	BUWEPSRESREP Pratt & Whitney Aircraft Div. United Aircraft Corporation East Hartford, Connecticut
1	U. S. Department of the Interior Bureau of Mines 4800 Forbes Avenue Pittsburgh, Pennsylvania 15213 Attn: M. M. Dolinar, Repts. Librarian Explosives Research Center
1	Central Intelligence Agency 2430 E Street, N. W. Washington, D. C. 20505 Attn: OCD, Standard Dist.
1	Office of the Director of Defense Research and Engineering Washington, D. C. 20301 Attn: W. E. Sheehan Office of Asst. Dir. (Chemical Technology)
1	National Aeronautics & Space Admin. Lewis Research Center 21000 Brookpark Road Cleveland, Ohio 44135 Attn: Library
1	National Aeronautics & Space Admin. Launch Operations Center Cocoa Beach, Florida 32931 Attn: Library
1	National Aeronautics & Space Admin. Manned Spacecraft Center P. O. Box 1537 Houston, Texas 77001 Attn: Library
1	National Aeronautics & Space Admin. George C. Marshall Space Flight Ctr. Huntsville, Alabama 35800 Attn: Library
3	National Aeronautics & Space Admin. Langley Research Center Langley Air Force Base Virginia 23365 Attn: Library
1	National Aeronautics & Space Admin. Washington, D. C. 20546 Attn: Office of Technical Information & Education Programs, Code ETL
2	Scientific & Technical Information Facility P. O. Box 5700 Bethesda, Maryland 20014 Attn: NASA Representative
1	National Aeronautics & Space Admin. Washington, D. C. 20546 Attn: R. W. Ziem (RPS)
1	National Aeronautics & Space Admin. Goddard Space Flight Center Greenbelt, Maryland 20771 Attn: Library
20	Defense Documentation Center Cameron Station Alexandria, Virginia 22314

COPIES	RECIPIENT
1	Arnold Eng. Development Center Attn: AEOIM Air Force Systems Command Tullahoma, Tennessee 37389
1	AFRPL (RPR) Edwards, California 93523
1	AFRPL (RPM) Edwards, California 93523
1	AFFTC (FTAT-2) Edwards AFB, California 93523
1	Office of Research Analysis Attn: RRRT Holloman AFB, New Mexico 88330
1	Wright-Patterson AFB, Ohio 45433 Attn: AFML (MAAE)
1	Commanding Officer Ballistic Research Laboratories Aberdeen Proving Ground, Maryland Attn: AMXBR-1 21005
1	Air Force Missile Test Center Attn: MTBAT Patrick Air Force Base, Florida 32925
1	Commanding Officer U. S. Army Research Office (Durham) Box CM, Duke Station Durham, North Carolina 27706
1	Commanding Officer U. S. Army Chemical Research & Development Laboratories Edgewood Arsenal, Maryland 21010 Attn: Chief, Physicochemical Research Division
1	Commanding Officer, Frankford Arsenal Philadelphia, Pennsylvania 19137 Attn: Propellant & Explosives Section, 1331
1	Commanding Officer Picatinny Arsenal Dover, New Jersey 07801 Attn: Library
1	Commanding Officer Picatinny Arsenal Liquid Rocket Propulsion Laboratory Dover, New Jersey 07801 Attn: Technical Library
4	U. S. Army Missile Command Redstone Scientific Info. Center Redstone Arsenal, Alabama 35808 Attn: Chief, Document Section
1	Commanding General White Sands Missile Range New Mexico 88002 Attn: Technical Library
2	Bureau of Naval Weapons Department of the Navy Washington, D. C. 20360 Attn: DLI-3
2	Bureau of Naval Weapons Department of the Navy Washington, D. C. 20360 Attn: RMMP-2
1	Bureau of Naval Weapons Department of the Navy Washington, D. C. 20360 Attn: RMMP-3
1	Bureau of Naval Weapons Department of the Navy Washington, D. C. 20360 Attn: RMMP-4
1	Bureau of Naval Weapons Department of the Navy Washington, D. C. 20360 Attn: RRRE-6

COPIES **RECIPIENT**

2 Commander
U. S. Naval Missile Center
Point Mugu, California 93041
Attn: Technical Library

2 Commander
U. S. Naval Ordnance Laboratory
White Oak
Silver Spring, Maryland 20910
Attn: Library

5 Commander
U. S. Naval Ordnance Test Station
China Lake, California 93557
Attn: Code 45

2 Commander (Code 753)
U. S. Naval Ordnance Test Station
China Lake, California 93557
Attn: Technical Library

1 Superintendent
U. S. Naval Postgraduate School
Naval Academy
Monterey, California

1 Commanding Officer
U. S. Naval Propellant Plant
Indian Head, Maryland 20640
Attn: Technical Library

1 Commanding Officer
Office of Naval Research
1030 E. Green Street
Pasadena, California 91101

1 Director (Code 6180)
U. S. Naval Research Lab
Washington, D. C. 20390
Attn: H. W. Carhart

1 Director
Special Projects Office
Department of the Navy
Washington, D. C. 20360

COPIES **RECIPIENT**

1 Commanding Officer
U. S. Naval Underwater Ordnance Station
Newport, Rhode Island 02844
Attn: W. W. Bartlett

1 Aerojet-General Corporation
P. O. Box 296
Azusa, California 91703
Attn: Librarian

1 Aerojet-General Corporation
11711 South Woodruff Avenue
Downey, California 90241
Attn: Florence Walsh, Librarian

3 Aerojet-General Corporation
P. O. Box 1947
Sacramento, California 95809
Attn: Technical Information Office

1 Aeronutronic Div. Philco Corp.
Ford Road
Newport Beach, California 92600
Attn: Dr. L. H. Linder, Manager
Technical Information Dept.

1 Aeroprojects, Inc.
310 East Rosedale Avenue
West Chester, Pennsylvania 19380
Attn: C. D. McKinney

2 Aerospace Corporation
P. O. Box 95085
Los Angeles, California 90045
Attn: Library-Documents

1 Allied Chemical Corporation
General Chemical Division
Research Lab., P. O. Box 405
Morristown, New Jersey 07960
Attn: L. J. Wiltrakis, Security Officer

1 Amcel Propulsion Company
Box 3049
Asheville, North Carolina 28802

COPIES	RECIPIENT
1	American Cyanamid Company 1937 W. Main Street Stamford, Connecticut 06902 Attn: Security Officer
1	IIT Research Institute Technology Center Chicago, Illinois 60616 Attn: C. K. Hersh, Chemistry Division
1	ARO, Inc. Arnold Engineering Dev. Center Arnold AF Station, Tennessee 37389 Attn: Dr. B. H. Goethert Director of Engineering
2	Atlantic Research Corporation Shirley Highway & Edsall Road Alexandria, Virginia 22314 Attn: Library
1	Southwest Research Institute Department of Structural Research 8500 Culebra Road San Antonio, Texas 78228 Attn: Dr. Robert C. DeHart, Director
1	Battelle Memorial Institute 505 King Avenue Columbus, Ohio 43201 Attn: Report Library, Room 6A
1	Bell Aerosystems Box 1 Buffalo, New York 14205 Attn: T. Reinhardt
1	The Boeing Company Aero Space Division P. O. Box 3707 Seattle, Washington 98124 Attn: R. R. Barber, Lib. Ut. Ch.
3	Chemical Propulsion Information Agency Applied Physics Laboratory 8621 Georgia Avenue Silver Spring, Maryland 20910
1	Defense Metals Information Center Battelle Memorial Institute 505 King Avenue Columbus, Ohio 42301
1	Douglas Aircraft Co., Inc. Santa Monica Division Santa Monica, California 90405 Attn: Mr. J. L. Waisman
1	The Dow Chemical Company Security Section, Box 31 Midland, Michigan 48641 Attn: Dr. R. S. Karpiuk, 1710 Building
2	E. I. duPont deNemours & Co. Eastern Laboratory Gibbstown, New Jersey 08027 Attn: Mrs. Alice R. Steward
1	Esso Research & Engineering Co. Special Projects Unit P. O. Box 8 Linden, New Jersey 07036 Attn: Mr. D. L. Baeder
1	General Dynamics/Astronautics P. O. Box 1128 San Diego, California 92112 Attn: Library & Information Serv. (128-00)
1	General Electric Company Cincinnati, Ohio 45215 Attn: Technical Information Center
1	Hercules Powder Company Allegany Ballistics Laboratory P. O. Box 210 Cumberland, Maryland 21501 Attn: Library
3	Hercules Powder Company Research Center Wilmington, Delaware 19800 Attn: Dr. Herman Skolnick, Manager Technical Information Division

COPIES	RECIPIENT
1	Jet Propulsion Laboratory 4800 Oak Grove Drive Pasadena, California 91103 Attn: Library (TDS) Mr. N. E. Devereux
3	Lockheed Propulsion Company P. O. Box 111 Redlands, California 92374 Attn: Miss Belle Berlad, Librarian
1	Marquardt Corp. 16555 Staticoy Street Box 2013 - South Annex Van Nuys, California 91404
1	Martin Company Baltimore, Maryland 21203 Attn: Science - Technology Library - Mail 398
2	Minnesota Mining & Manufacturing Co. 900 Bush Avenue St. Paul, Minnesota 55106 Attn: J. D. Ross VIA: H. C. Zeman, Security Administrator
1	Monsanto Research Corporation Boston Labs., Everett Station Boston, Massachusetts 02149 Attn: Library
1	New York University Dept. of Chemical Engineering New York, New York 10053 Attn: P. F. Winternitz
1	North American Aviation, Inc. Space & Information Systems Division 12214 Lakewood Boulevard Downey, California 90242 Attn: W. H. Morita
3	Rocketdyne, 6633 Canoga Avenue Canoga Park, California 91304 Attn: Library, Dept. 596-306
1	Rohm & Haas Company Redstone Arsenal Research Division Huntsville, Alabama 35808 Attn: Librarian
2	Space Technology Laboratory, Inc. 1 Space Park Redondo Beach, California 90200 Attn: STL Tech. Lib. Doc. Acquisitions
1	Texaco Experiment Incorporated P. O. Box 1-T Richmond, Virginia 23202 Attn: Librarian
1	United Technology Center P. O. Box 358 Sunnyvale, California 94088 Attn: Librarian
1	Thiokol Chemical Corporation Alpha Division, Huntsville Plant Huntsville, Alabama 35800 Attn: Technical Director
1	Thiokol Chemical Corporation Alpha Division, Space Booster Plant Brunswick, Georgia 31500
1	Thiokol Chemical Corporation Elkton Division Elkton, Maryland 21921 Attn: Librarian
1	Thiokol Chemical Corporation Reaction Motors Division Denville, New Jersey 07834 Attn: Librarian
2	Thiokol Chemical Corporation Wasatch Division, P. O. Box 524 Brigham City, Utah 84302 Attn: Library Section

COPIES RECIPIENT

1 Union Carbide Chemicals Co.
P. O. Box 8584 (Technical Center)
South Charleston, West Virginia 25303
Attn: Dr. H. W. Schulz

1 United Aircraft Corporation
Pratt & Whitney Fla. Res. & Dev. Ctr.
P. O. Box 2691
West Palm Beach, Florida 33402
Attn: Library

1 United Aircraft Corporation
Corporation Library
400 Main Street
East Hartford, Connecticut 06108
Attn: Dr. David Rix

1 General Electric Company
Apollo Support Department
P. O. Box 2500
Daytona Beach, Florida 32015

1 Commander, Air Force Systems Command
Foreign Technology Division
Attn: RTD (TD-E3b)
Wright-Patterson AFB, Ohio 45433

1 Institute of Defense Analysis
Res. & Engr. Support Division
Attn: Technical Information Office
1825 Connecticut Avenue
Washington 9, D. C. 20009

1 Air University Library
Maxwell AFB, Alabama 36112

1 Commanding Officer
Ammunition Procurement & Supply Agency
Joliet, Illinois 60400
Attn: Engr. Library

1 AFRPL (RPCS)
Edwards, California 93523

COPIES RECIPIENT

1 Callery Chemical Company
Research & Development
Callery, Pennsylvania 16024
Attn: Document Control

1 Ethyl Corporation
P. O. Box 3091
Istrouma Branch
Baton Rouge, Louisiana 70805

1 Hercules Powder Company
Bacchus Works
Magna, Utah 84044
Attn: Librarian

1 Hynes Research Corporation
308 Bon Air Avenue
Durham, North Carolina 27704

1 Walter Kidde Company
675 Main Street
Belleville, New Jersey 07109
Attn: Security Librarian

1 Olin Mathieson Chemical Corporation
Marion, Illinois 62959
Attn: Research Library, Box 508

1 Olin Mathieson Chemical Corporation
Research Library 1-K-3
275 Winchester Avenue
New Haven, Connecticut 06511
Attn: Mail Control Room
Miss Laura M. Kajuti

1 U. S. Naval Propellant Plant
Code Re3B, Attn: C. L. Adams
Indian Head, Maryland 20640

1 Rocket Research Corporation
233 South Holden Street
Seattle 8, Washington 98108

1 AFRPL (RPCL)
Edwards, California 93523

COPIES	RECIPIENT
1	Pennsalt Chemicals Corporation Technological Center 900 First Avenue King of Prussia, Pennsylvania 19406
1	Purdue University Lafayette, Indiana 47907 Attn: M. J. Zucrow
1	Rocketdyne, A Div. of NAA, Inc. Solid Propulsion Operations P. O. Box 548, McGregor, Texas 76657 Attn: Library
1	Shell Development Company 1400 53rd Street Emeryville, California 94608
1	Texaco, Inc. P. O. Box 509 Beacon, New York 12508 Attn: Dr. R. E. Conary, Manager
1	Los Alamos Scientific Laboratory University of California P. O. Box 1663 Los Alamos, New Mexico 87544
1	Bellcomm Incorporated Attn: H. S. Londor 110 Seventeenth Street, N.W. Washington, D. C. 20036
1	Headquarters, U. S. Air Force Attn: AFRSTD Washington, D. C. 20330
1	RTD (RTTP) Bolling AF Base Washington, D. C. 20332
1	Chem. Research & Dev. Center FMC Corp., P. O. Box 8 Princeton, New Jersey 08540 Attn: Security Officer
4	*British Defence Staff British Embassy 3100 Massachusetts Avenue Washington, D. C. 20008 Attn: Scientific Information Officer
4	*Defence Research Member Canadian Joint Staff (W) 2450 Massachusetts Avenue Washington, D. C. 20008

*Transmit VIA: Headquarters
Air Force Systems Command
Attn: SCS-41(3-1833)
Andrews Air Force Base
Washington, D. C. 20331

TABLE 1

PRELIMINARY RESULTS OF BERYLLIUM-GRAIN MOTOR TESTS

Test No.	Mixer Configuration	Method of Calculation	t_b sec	A_t in.^{2}	P_c - psia up	P_c - psia down	F lb	$\dot{w}_{O_2}/\dot{w}_{H_2}$ (overall)	$\dot{w}_{H_2}/\dot{w}_p$ (overall)	$\dot{r}$ in./sec	η_{c^*} %	$\eta_{I_{sp}}$ %	η_{C_F} %
B-1	Canted Copper Insert	Time Averaged	6.6	0.783	595.7	437.4	550.4	1.92	0.246	0.093	71.2	74	104
B-2	Flame Mixer	Time Averaged	3.8	1.131	311.5	287.7	449	2.44	0.232	0.153	55.8	54	96.8
		Instantaneous	-	1.138	475	433	744.2	2.31	0.206	0.155	72.5	70.4	97
B-3	Flame Mixer (see Fig. 6)		4.0										
B-4	Flame Mixer (see Fig. 8)	Time Averaged	5.6	1.528	347	268	658.5	4.99	0.144	0.083	45	51.7	115
		Instantaneous	-	1.595	454.5	374.7	913.9	4.86	0.143	0.12	62	63.4	102
B-5	Flame Mixer (see Fig. 8)	Time Averaged	5.9	1.219	470	420.5	690.4	2.27	0.217	0.101	79.2	69.8	88.1
		Instantaneous	-	1.219	510.2	456.7	756.4	2.21	0.236	0.094	84.8	79.3	93.5
		Instantaneous	-	1.219	487	478.4	798.4	2.33	0.225	0.052	89.7	84.8	94.5
B-6			5.1										

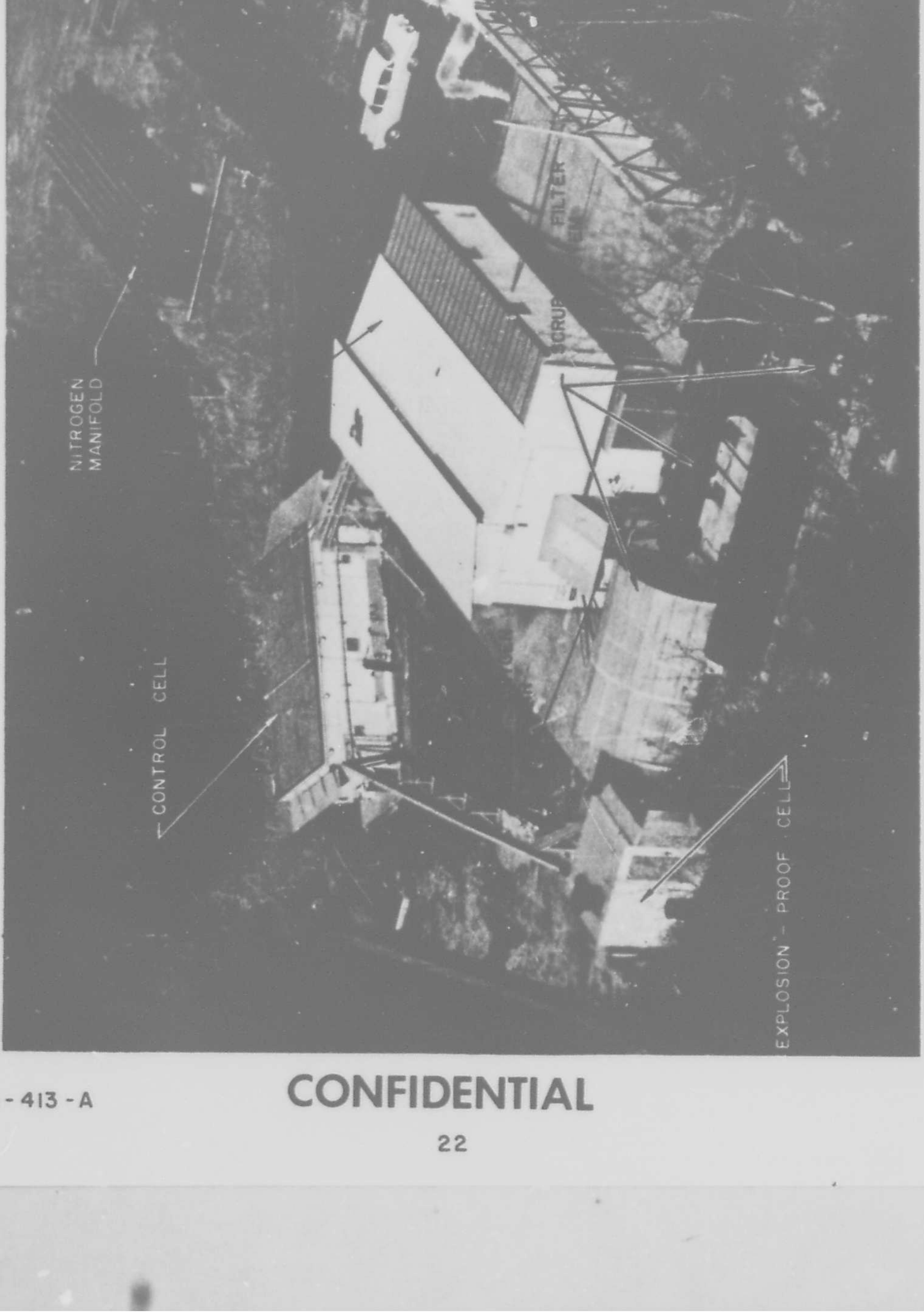

FIGURE 1 -ROCKET TEST INSTALLATION

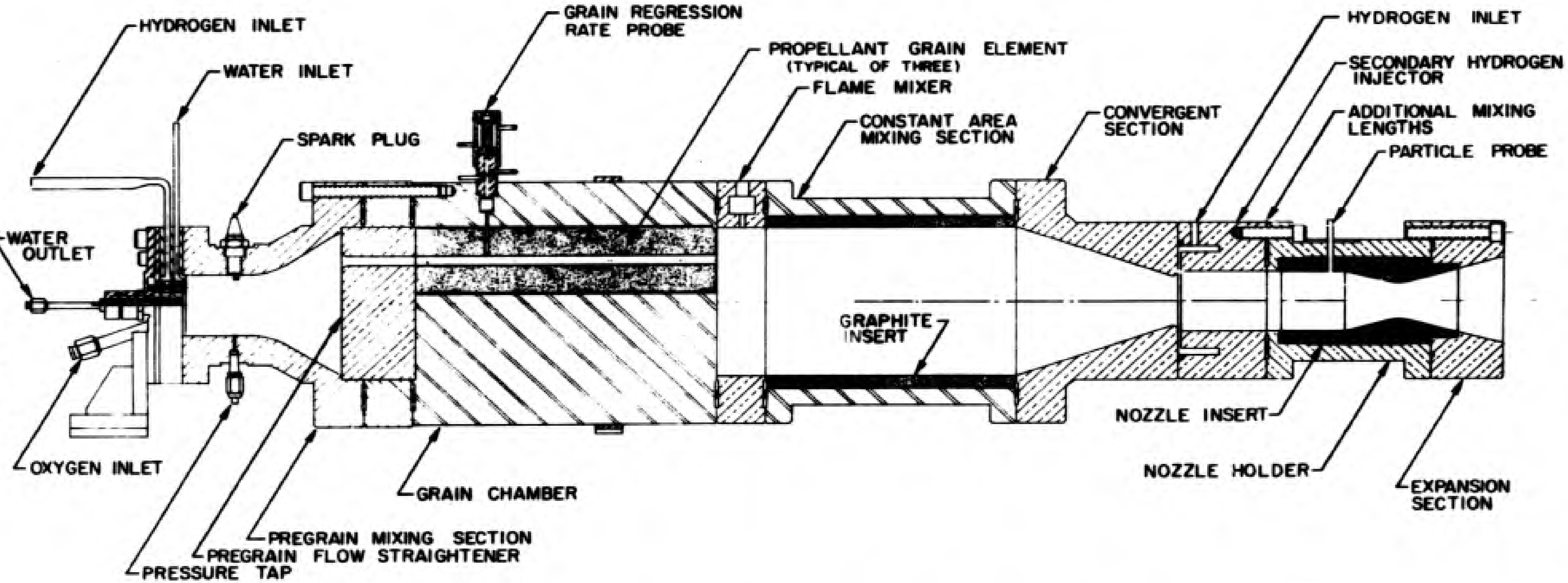

FIGURE 2 – SMALL SCALE TRIBRID ROCKET MOTOR

PARALLEL - GRAIN CONFIGURATION

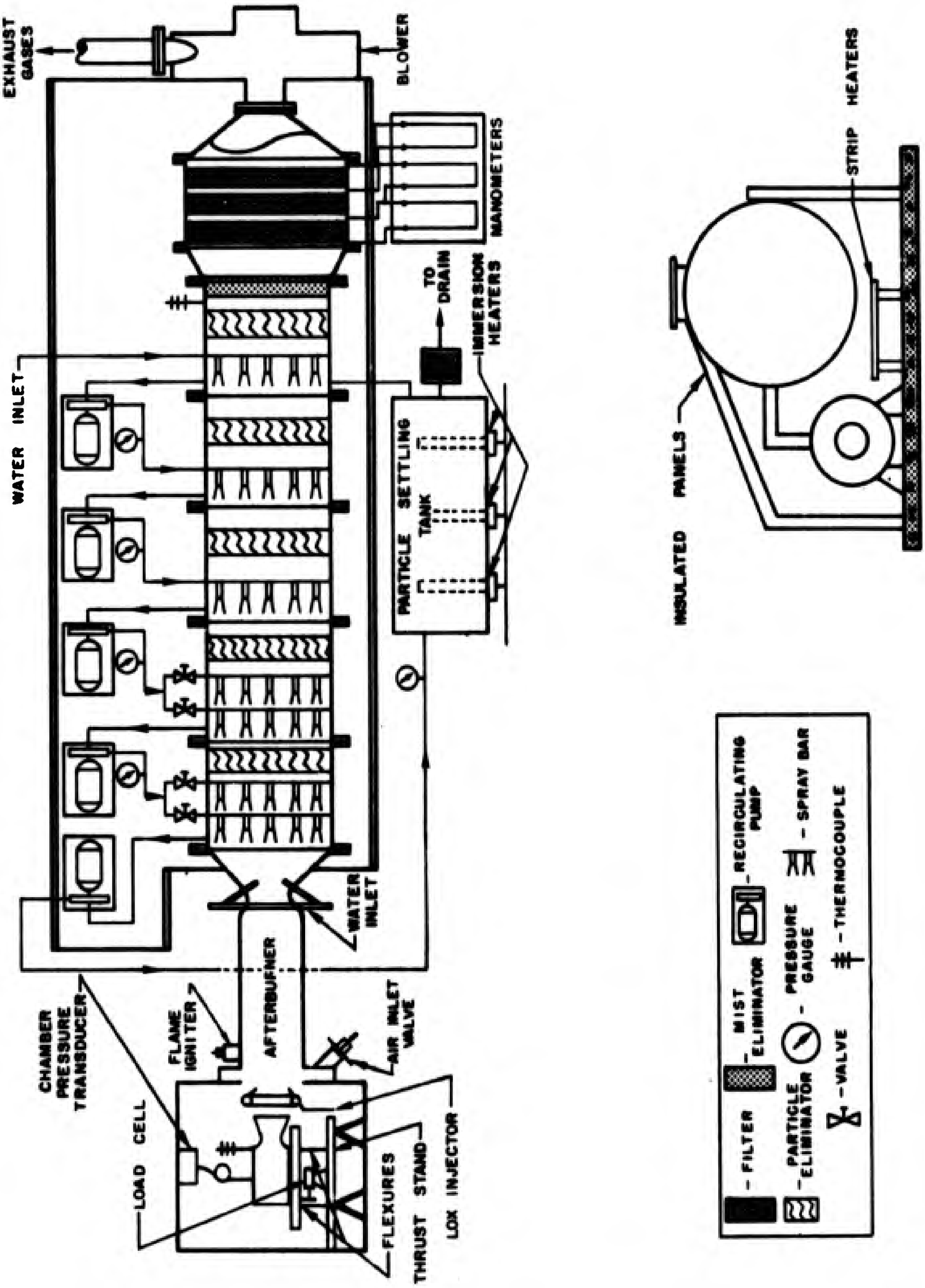

CROSS-SECTIONAL VIEW OF SPRAY SECTION

FIGURE 3 - EXHAUST GAS SCRUBBING - FILTERING SYSTEM

]

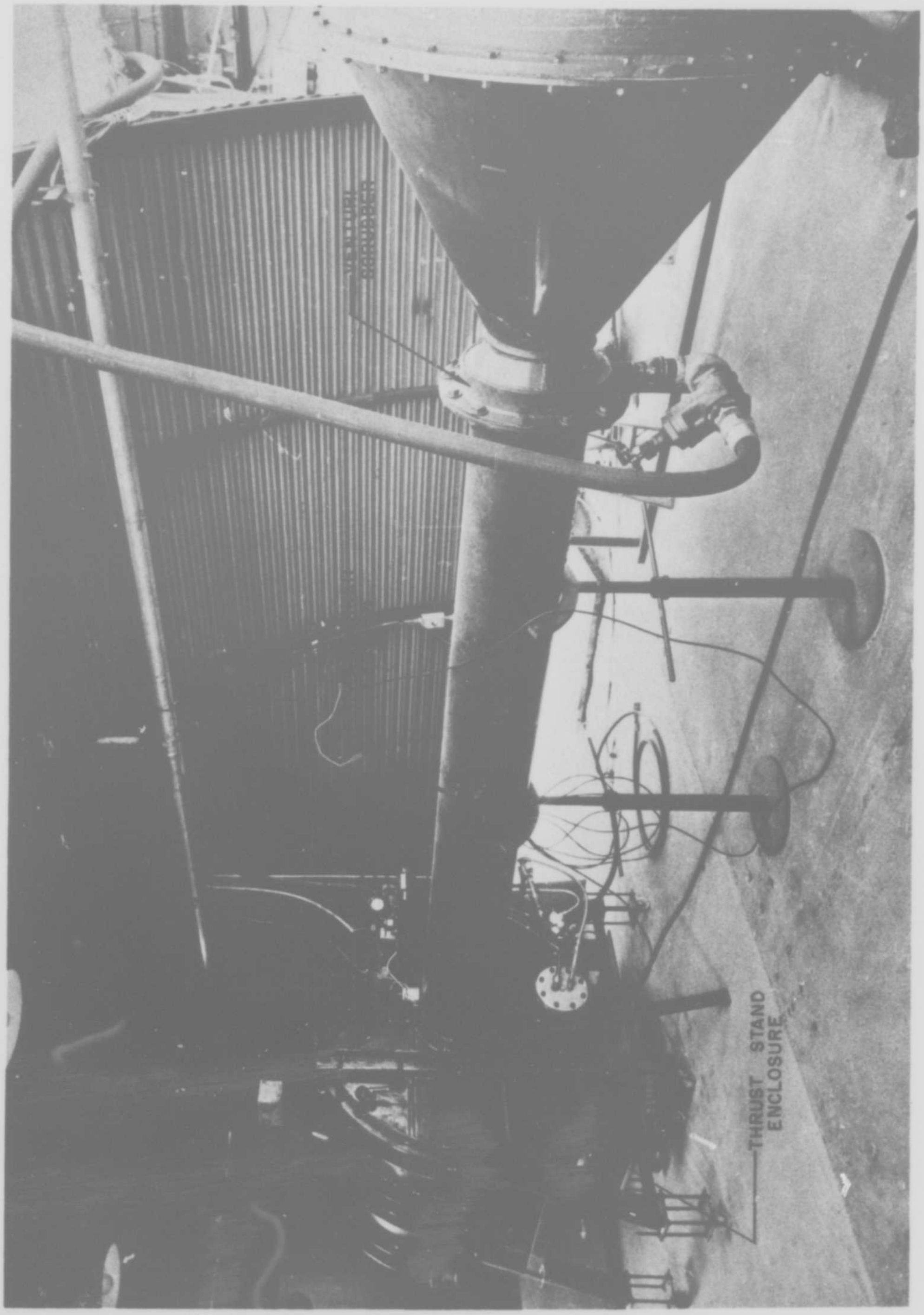

FIGURE 4 - ENCLOSED THRUST STAND AND AFTERBURNER

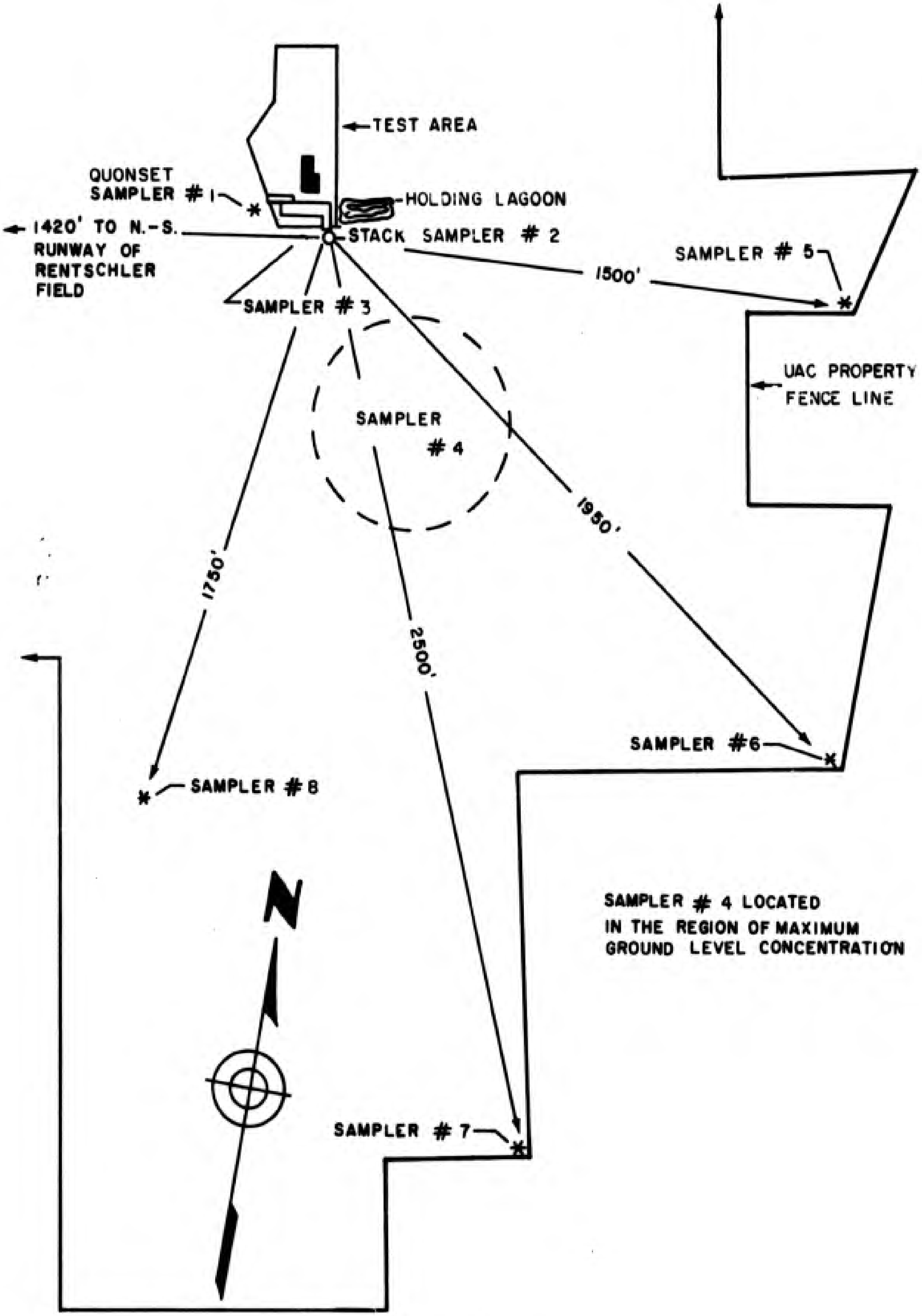

FIGURE 5 - AIR SAMPLER LOCATIONS

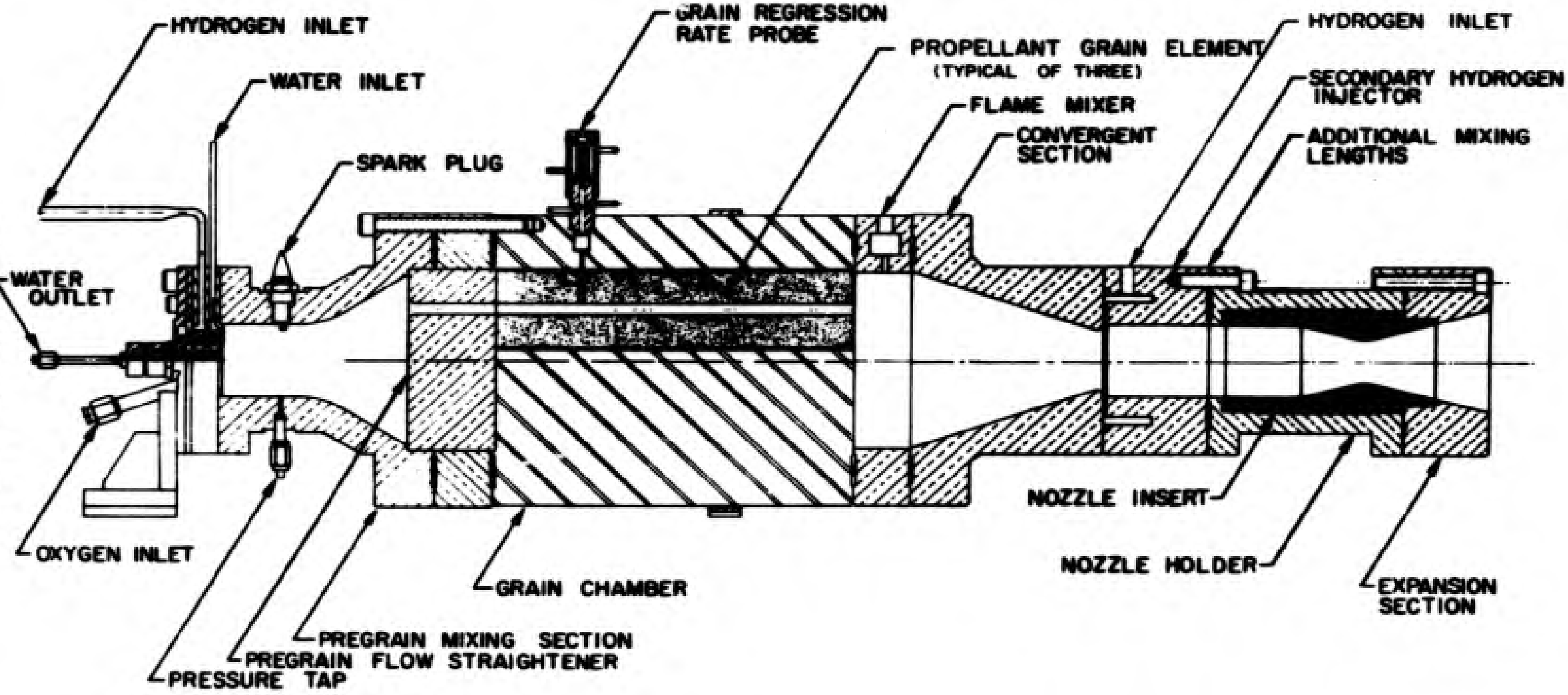

FIGURE 6 - SMALL SCALE TRIBRID ROCKET MOTOR

PARALLEL - GRAIN CONFIGURATION

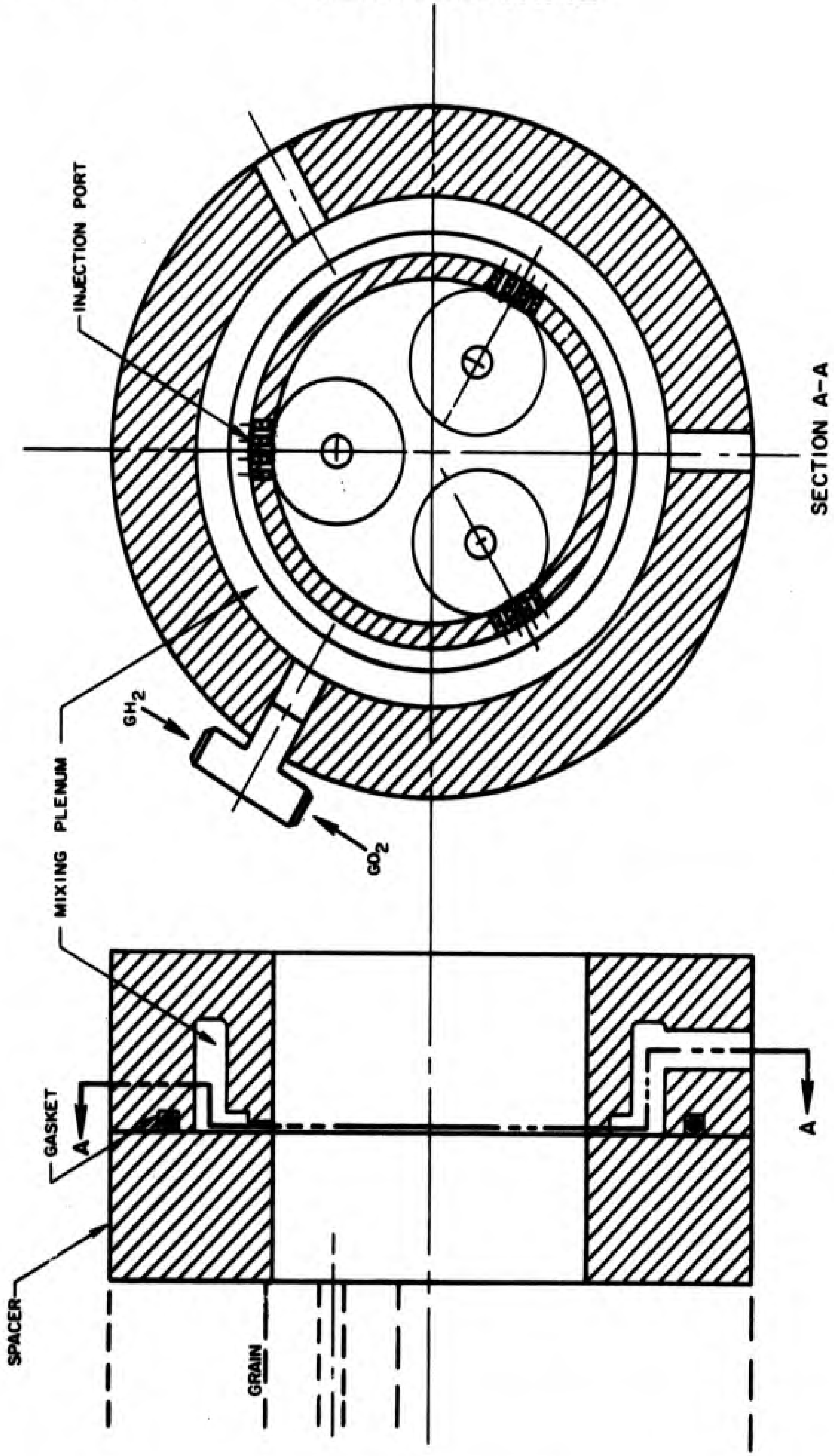

FIGURE 7 - FLAME MIXER - TEST B-3

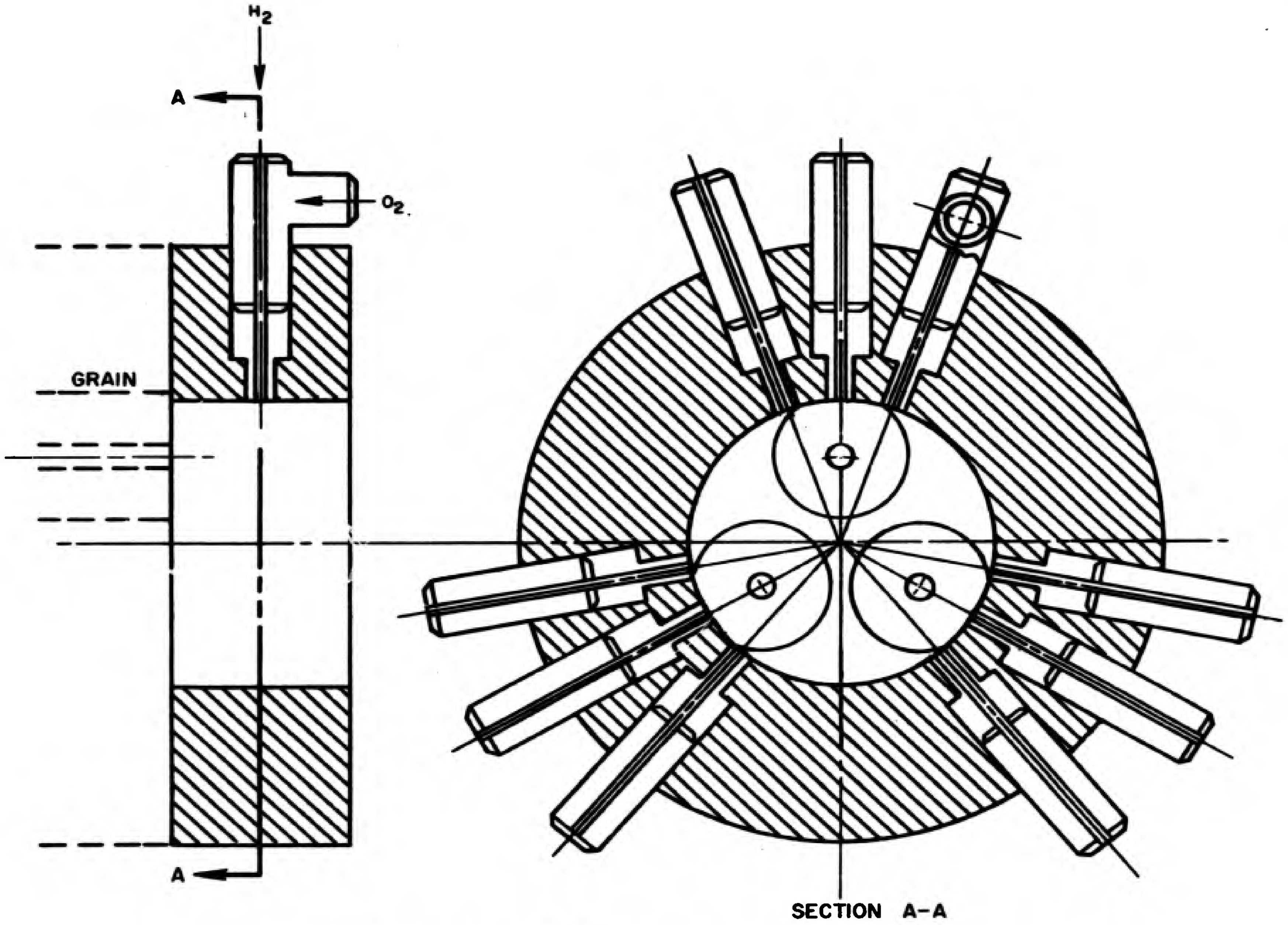

FIGURE 8 - FLAME MIXER - TEST B-4

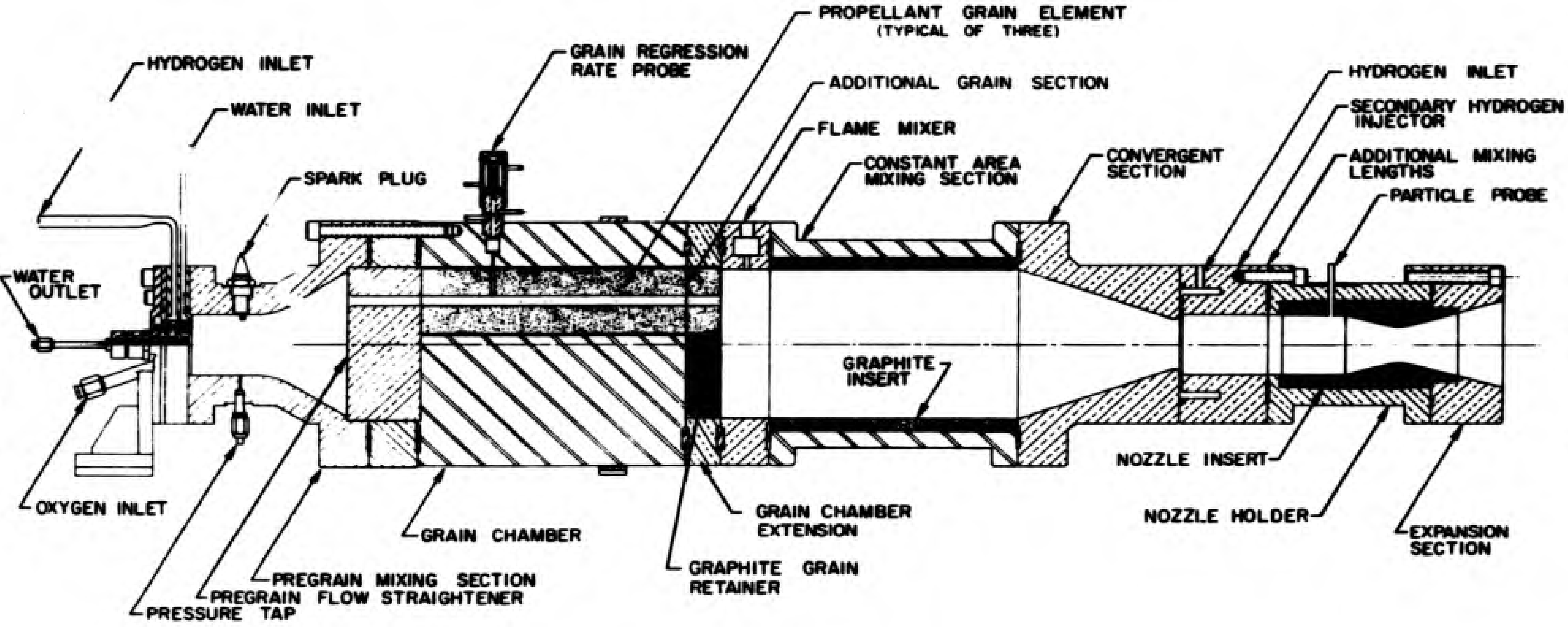

FIGURE 9 - SMALL SCALE TRIBRID ROCKET MOTOR

PARALLEL - GRAIN CONFIGURATION

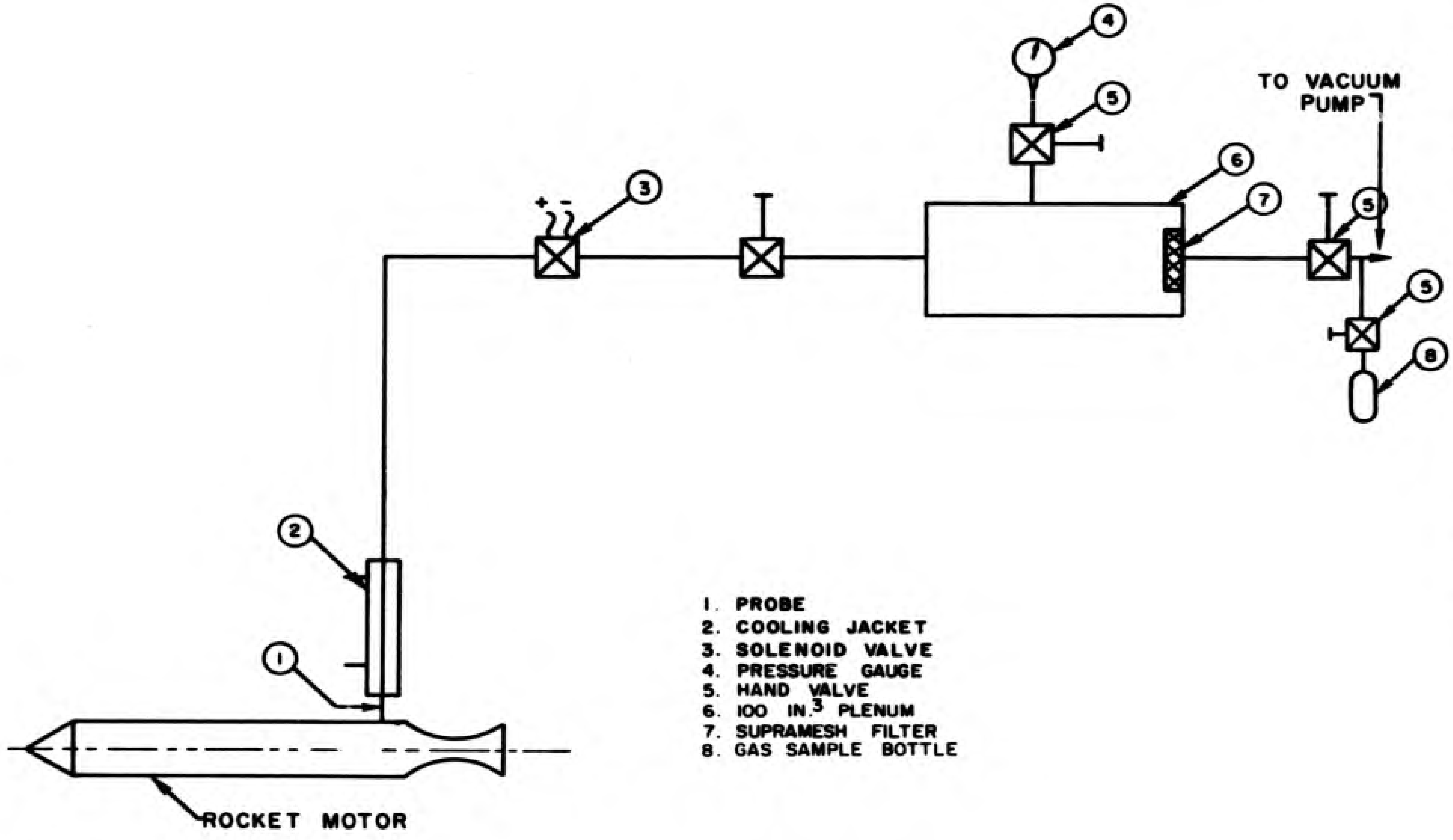

FIGURE 10 – PARTICLE SAMPLING SYSTEM

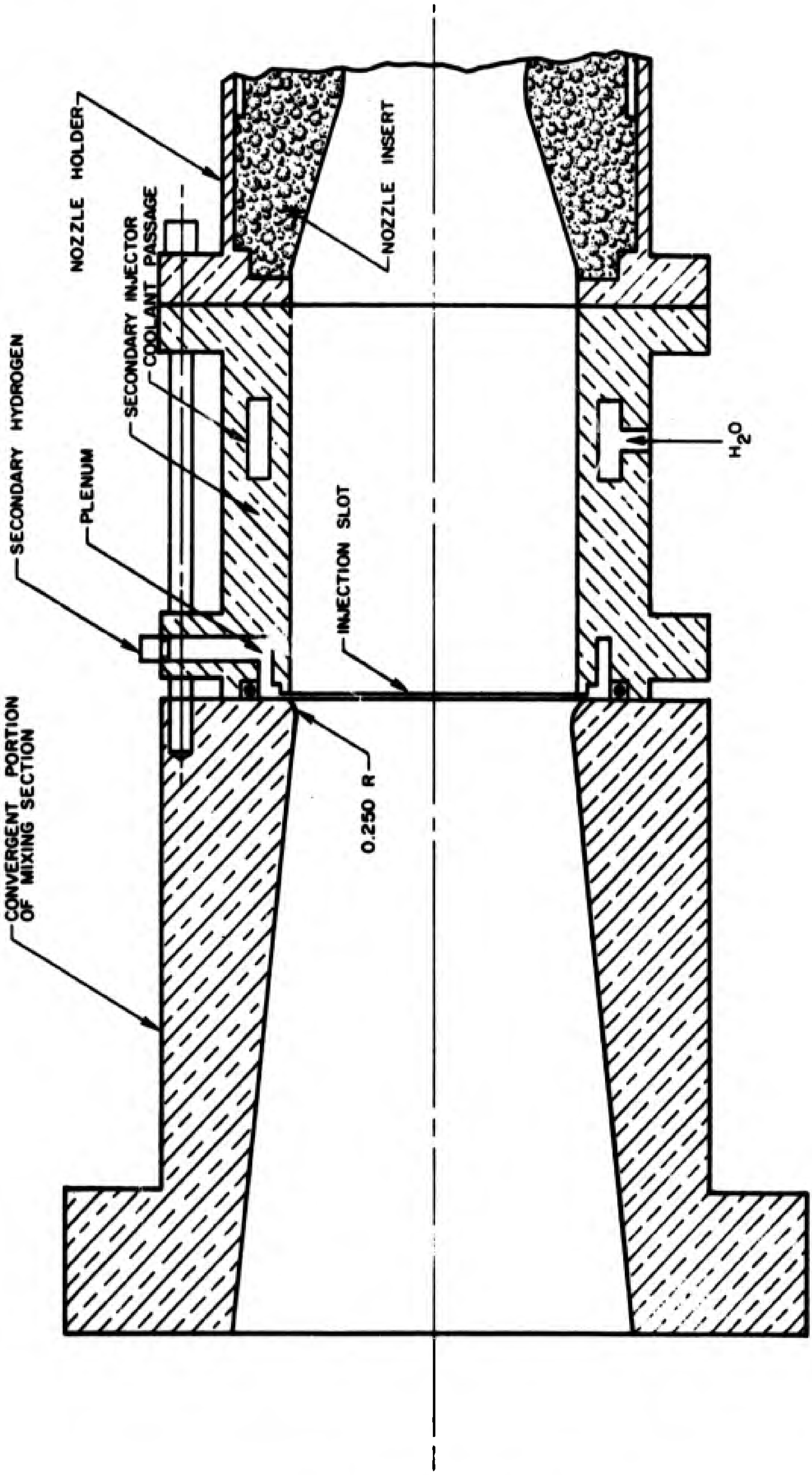

FIGURE 11 - WATER - COOLED SECONDARY HYDROGEN INJECTOR

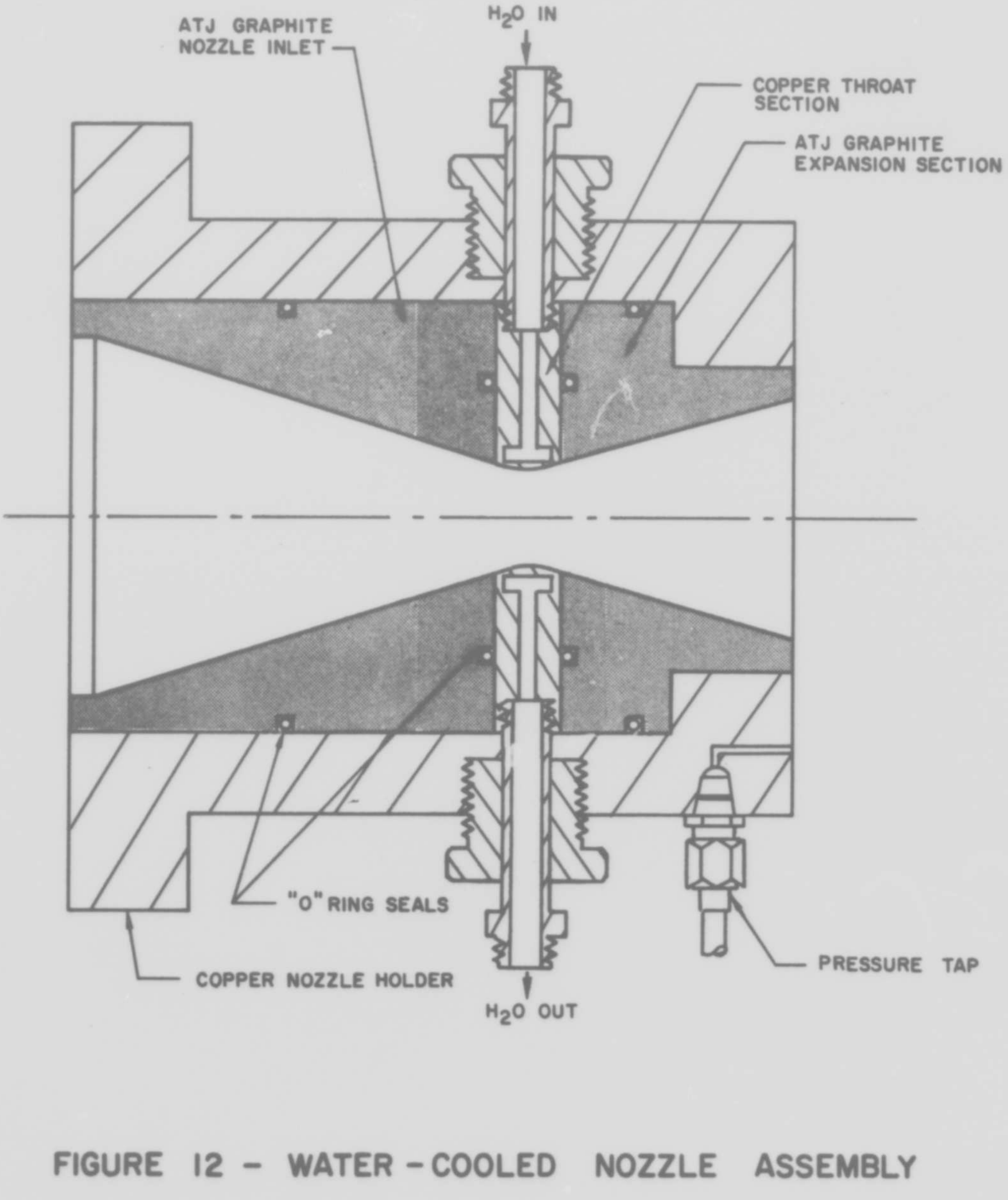

FIGURE 12 - WATER-COOLED NOZZLE ASSEMBLY

Unclassified

Security Classification

DOCUMENT CONTROL DATA - R&D

(Security classification of title, body of abstract and indexing annotation must be entered when the overall report is classified)

1. ORIGINATING ACTIVITY *(Corporate author)*

United Aircraft Research Laboratories
400 Main Street
East Hartford, Connecticut 06108

2a. REPORT SECURITY CLASSIFICATION

Confidential(noRestrictedData)

2b. GROUP

4

3. REPORT TITLE

PERFORMANCE CHARACTERISTICS OF A CRYOGENIC TRIPROPELLANT SYSTEM

4. DESCRIPTIVE NOTES *(Type of report and inclusive dates)*

Quarterly Progress Report No. 5, March 1 through May 31, 1966

5. AUTHOR(S) *(Last name, first name, initial)*

Miller, Charles R.
McFarlin, David J.
Sadowski, Thomas J.

6. REPORT DATE

June 1966

7a. TOTAL NO. OF PAGES

34

7b. NO. OF REFS

5

8a. CONTRACT OR GRANT NO.

Contract AF 04(611)-10535

b. PROJECT NO.

AFSC 3058

c.

AF Prog. Struct. No. 750G

d.

9a. ORIGINATOR'S REPORT NUMBER(S)

E910331-20

9b. OTHER REPORT NO(S) *(Any other numbers that may be assigned this report)*

AFRPL-TR-66-140

10. AVAILABILITY/LIMITATION NOTICES

In addition to security requirements which must be met, this document is subject to special export controls and each transmittal to foreign governments or foreign nationals may be made only with prior approval of AFRPL(RPPL-RPRE), Edwards AFB, California 93523

11. SUPPLEMENTARY NOTES

12. SPONSORING MILITARY ACTIVITY

Air Force Rocket Propulsion Laboratory
Research and Technology Division
Edwards Air Force Base, California
Air Force Systems Command, U. S. Air Force

13. ABSTRACT

The United Aircraft Research Laboratories under contract with the United States Air Force are conducting an investigation to determine the performance characteristics of a cryogenic tripropellant system in small-scale thrust chambers. This report summarizes the work performed during the period March 1 through May 31, 1966.

DD FORM 1 JAN 64 1473

Unclassified

Security Classification

14. KEY WORDS	LINK A		LINK B		LINK C	
	ROLE	WT	ROLE	WT	ROLE	WT
cryogenic tripropellant system metal feed system						

INSTRUCTIONS

1. ORIGINATING ACTIVITY: Enter the name and address of the contractor, subcontractor, grantee, Department of Defense activity or other organization *(corporate author)* issuing the report.

2a. REPORT SECURITY CLASSIFICATION: Enter the overall security classification of the report. Indicate whether "Restricted Data" is included. Marking is to be in accordance with appropriate security regulations.

2b. GROUP: Automatic downgrading is specified in DoD Directive 5200.10 and Armed Forces Industrial Manual. Enter the group number. Also, when applicable, show that optional markings have been used for Group 3 and Group 4 as authorized.

3. REPORT TITLE: Enter the complete report title in all capital letters. Titles in all cases should be unclassified. If a meaningful title cannot be selected without classification, show title classification in all capitals in parenthesis immediately following the title.

4. DESCRIPTIVE NOTES: If appropriate, enter the type of report, e.g., interim, progress, summary, annual, or final. Give the inclusive dates when a specific reporting period is covered.

5. AUTHOR(S): Enter the name(s) of author(s) as shown on or in the report. Enter last name, first name, middle initial. If military, show rank and branch of service. The name of the principal author is an absolute minimum requirement.

6. REPORT DATE: Enter the date of the report as day, month, year; or month, year. If more than one date appears on the report, use date of publication.

7a. TOTAL NUMBER OF PAGES: The total page count should follow normal pagination procedures, i.e., enter the number of pages containing information.

7b. NUMBER OF REFERENCES: Enter the total number of references cited in the report.

8a. CONTRACT OR GRANT NUMBER: If appropriate, enter the applicable number of the contract or grant under which the report was written.

8b, 8c, & 8d. PROJECT NUMBER: Enter the appropriate military department identification, such as project number, subproject number, system numbers, task number, etc.

9a. ORIGINATOR'S REPORT NUMBER(S): Enter the official report number by which the document will be identified and controlled by the originating activity. This number must be unique to this report.

9b. OTHER REPORT NUMBER(S): If the report has been assigned any other report numbers *(either by the originator or by the sponsor)*, also enter this number(s).

10. AVAILABILITY/LIMITATION NOTICES: Enter any limitations on further dissemination of the report, other than those imposed by security classification, using standard statements such as:

(1) "Qualified requesters may obtain copies of this report from DDC."

(2) "Foreign announcement and dissemination of this report by DDC is not authorized."

(3) "U. S. Government agencies may obtain copies of this report directly from DDC. Other qualified DDC users shall request through
_______________."

(4) "U. S. military agencies may obtain copies of this report directly from DDC. Other qualified users shall request through
_______________."

(5) "All distribution of this report is controlled. Qualified DDC users shall request through
_______________."

If the report has been furnished to the Office of Technical Services, Department of Commerce, for sale to the public, indicate this fact and enter the price, if known.

11. SUPPLEMENTARY NOTES: Use for additional explanatory notes.

12. SPONSORING MILITARY ACTIVITY: Enter the name of the departmental project office or laboratory sponsoring *(paying for)* the research and development. Include address.

13. ABSTRACT: Enter an abstract giving a brief and factual summary of the document indicative of the report, even though it may also appear elsewhere in the body of the technical report. If additional space is required, a continuation sheet shall be attached.

It is highly desirable that the abstract of classified reports be unclassified. Each paragraph of the abstract shall end with an indication of the military security classification of the information in the paragraph, represented as *(TS), (S), (C), or (U)*.

There is no limitation on the length of the abstract. However, the suggested length is from 150 to 225 words.

14. KEY WORDS: Key words are technically meaningful terms or short phrases that characterize a report and may be used as index entries for cataloging the report. Key words must be selected so that no security classification is required. Identifiers, such as equipment model designation, trade name, military project code name, geographic location, may be used as key words but will be followed by an indication of technical context. The assignment of links, roles, and weights is optional.

DD FORM 1 JAN 64 1473 (BACK)