UNCLASSIFIED

AD 403 800

Reproduced
by the
DEFENSE DOCUMENTATION CENTER
FOR
SCIENTIFIC AND TECHNICAL INFORMATION

CAMERON STATION, ALEXANDRIA, VIRGINIA

UNCLASSIFIED

NOTICE: When government or other drawings, specifications or other data are used for any purpose other than in connection with a definitely related government procurement operation, the U. S. Government thereby incurs no responsibility, nor any obligation whatsoever; and the fact that the Government may have formulated, furnished, or in any way supplied the said drawings, specifications, or other data is not to be regarded by implication or otherwise as in any manner licensing the holder or any other person or corporation, or conveying any rights or permission to manufacture, use or sell any patented invention that may in any way be related thereto.

63-3-4

RADC-TDR-62-538

October 1962

CATALOGED BY ASTIA
403800

403 800

FINAL REPORT
APPLICATION OF FERROELECTRIC MATERIALS TO MICROWAVE CIRCUITS

Robert L. Orrick, Jr.

Caswell Electronics Corporation
434 Queens Lane
San Jose, 12, California

AF 30 (602)-2240

Prepared for:

Rome Air Development Center
Air Force Systems Command
United States Air Force
Griffiss Air Force Base
New York

MAY 6 1963
TISIA

FOREWORD

a. This program was initiated to determine the microwave characteristics and application of ferroelectric and composite ferroelectric-ferromagnetic materials to microwave circuitry. Specifically, the objective was to investigate, study and improve the microwave characteristics of these materials and to accumulate data from the most appropriate material for application in components such as phase shifters and circulators.

b. The following approaches toward the fulfillment of the contractual goals were considered by the contractor and its subcontractor, the University of Michigan:

(1) The investigation of ferroelectric materials was performed by the University of Michigan. Their approach toward optimizing the dielectric constant of ferroelectric materials as a function of electric field was (1) to identify and understand the physical mechanisms responsible for the change in permittivity with electric field; (2) to specify the theoretical limits of change in dielectric behavior as a function of temperature and electric field and (3) to investigate ferroelectric systems having the most promise for successful application.

Foreword (cont'd)

(2) The study of the application of materials was performed by the prime contractor, Caswell Electronics Corporation. Their approach was (1) to evaluate commercially available ceramic ferroelectric materials in addition to the materials that would be furnished by the University of Michigan and (2) to determine theoretically the and experimentally the behavior of microwave, ferroelectric devices.

c. (1) Seven compositions of mixed barium-strontium-titanate were prepared and evaluated to determine their electrical and optical properties as a function of biasing electric field and temperature. A phenomenological theory for the nonlinear behavior was evolved and from optical studies of these materials the contractor obtained experimental evidence to corroborate this theory. Experimental data indicates that the change in dielectric constant with electric field does not depend on domain orientation but upon an induced ferroelectric state in grains (crystallites) which are paraelectric at zero bias. Results indicate that for a maximum change in peritti-vity as a function of applied field there must also occur a maximum thermal instability. Work was extended to the investigation of a low permittivity, field sensitive, colemanite

Foreword cont'd

material. Single crystal measurements compared favorably with published data; however, efforts to synthesize this crystalline material and to modify its dielectric properties as a function of atomic substitution proved to be unsuccessful. Several samples of polycrystalline colemanite were prepared with varying amounts of resin binder and high dieledtric materials. Results showed that changing the percentage of resin over a small range had very little effect on the shape and magnitude of the permittivity vs temperature curve. Adding a high dielectric filler to a polycrystalline colemanite showed that the permittivity increased but had no noticeable effect on the nonlinearity as a function of field.

(2) Theory and experimental data are presented for a number of microwave devices. Phase shifts of 100 degrees per db loss at 60 Kv/inch were obtained in a reactively terminated transmission line utilizing a Gulton ferroelectric material ($Ba_{.73}Sr_{.27}TiO_3$). A transmission line phase shifters in conjunction with a 3 db hybrid was fabricated and tested. Fifty five degrees phase shift with 0.9 db loss was obtained at 1.2 Gc/sec when 60 Kv/inch was applied to this device. A theory describing a four port tunable traveling wave filter is

Foreword cont'd

discussed and some experimental data are presented for operation at 1.195 Gc/Sec. Isolation between ports was limited by a loop length change of 54 degrees which was the maximum output of the ferroelectric phase shift section.

d. This program was demonstrated and nonfeasibility of utilizing present state-of-the-art ferroelectric materials in the design of microwave components comparable to conventional ferromagnetic devices. Available ferroelectric materials give a phase shift to loss ratio of about one order of magnitude lower than ferrite materials. Further improvement would necessitate developing materials with lower loss tangents, lower dielectric constants and high nonlinearity. Potential substances for future investigations are the polar solids and the low permittivity ferroelectrics having a double Curie point. Results of this program can be used as a guide to future endeavors toward improving the preparation, the fabrication and the reproductibility of materials and their intrinsic properties conducive to optimum microwave applications.

ABSTRACT

A theory to describe the behaviour of a reactively terminated transmission line is presented. The experimental data is in good agreement with the theory. Phase shifts of 100 degrees per db loss were acheived in this type of device using commercially available ferroelectrics. A transmission phase shifter using two reactively terminated phase shifters and a 3 db hybrid was made and tested. Fifty five degrees phase shift with 0.9 db loss was obtained. A theory describing a tunable travelling wave filter is discussed and some experimental data is presented.

A reflective waveguide phase shifter is discussed.

Direct transmission phase shifters are discussed with respect to the ferroelectric material characteristics. Methods of matching into high dielectric materials are presented along with experimental data. An X-band waveguide phase shifter was made which gave 43 degrees phase shift and 11 db loss. A switching circulator using ferroelectric phase shifters is described.

A description of two methods of making dielectric constant measurements is reviewed and experimental results are given. The investigation of colemanite at this laboratory is described.

It is concluded that commercially available ferroelectric materials have relatively high loss tangents and that for this

reason the phase shift to loss ratio of ferroelectrics is almost one order of magnetitude lower than that of ferrites. Moderately good phase shifters can be made in coaxial lines in very small sizes. Direct transmission phase shifters suffer because of difficult matching problems. Further significant development beyond those reported here probably will wait for the development of low loss ferroelectric materials. It is recommended that all further research funds be used for development of low loss, low dielectric constant, high nonlinearity ferroelectric materials.

TABLE OF CONTENTS

TITLE	PAGE
APPLICATION OF FERROELECTRIC MATERIALS TO MICROWAVE CIRCUITS.	
FOREWARD	i
ABSTRACT	ii
DISCUSSION AND RESULTS	1
GENERAL INFORMATION	1
A REACTIVELY TERMINATED TRANSMISSION LINE	1
Theory	1
Experimental Results and Comparison to Theory	11
DC Block and Voltage Lead In	23
Permanently Mounted Phase Shifters	24
Transmission Phase Shifter Using a Reactively Terminated Line	29
A Tunable Traveling Wave Filter	33
A REFLECTIVE WAVEGUIDE PHASE SHIFTER	41
TRANSMISSION PHASE SHIFTERS	43
Theory	43
Waveguide Phase Shifter	46
A Circulator Switch	57
DIELECTRIC MEASUREMENTS	59
COLEMANITE	64
FABRICATION OF FERROELECTRIC PIECES	72
ELECTRODES	74
CONCLUSIONS AND RECOMMENDATIONS	78
DIELECTRIC AND OPTICAL PROPERTIES OF TITANTE AND COLEMANITE FERROELECTRICS	1
INTRODUCTION	
INVESTIGATION OF CHANGE IN SMALL-SIGNAL PERMITTIVITY WITH BIASING FIELDS FOR TITANATE-LIKE FERROELECTRICS	3
INTRODUCTION	3

Contents

EXPERIMENTAL PROCEDURE 6
- Sample Preparation 6
- The Heating Stage 7
- Capacitance Measurements 9
- Intensity Measurements 11
- Concluding Remarks 16

INVESTIGATION OF COLEMANITE FERROELECTRICS 18
- REVIEW 18
- COMPUTATION OF ε VS. T AND E FOR POLYCRYSTALLINE COLEMANITE 30

CONCLUSIONS 34

DISCUSSION AND RESULTS

GENERAL INFORMATION

A typical ferroelectric ceramic will have a dielectric constant - electric field intensity - temperature surface as shown in Figure 1.[1,2] The dielectric constant dependence on the electric field was utilized in the development of transmission phase shifters and reflective phase shifters.

Two types of reflective phase shifters were attempted. One type was a reactively terminated coaxial line; the other was a shorted waveguide loaded with nonlinear dielectric material. Since the principle of the operation is quite different for the two phase shifters, they will be considered separately.

A REACTIVELY TERMINATED TRANSMISSION LINE

Theory

Consider a coaxial line several wavelengths long at microwave frequencies which is terminated with a piece of

1. A surface generalized from data gather by D. A. Johnson, a consultant, which was reported July 1961 under contract AF49(638)-415, "Microwave Properties of Ceramic Nonlinear Dielectrics", Microwave Laboratory, Stanford University.
2. L. W. Orr, "$\mathcal{E}$-T-E Surfaces of Ferroelectric Ceramics", Engineering Research Institute report October 1955, University of Michigan, gives many similar curves at audio frequency.

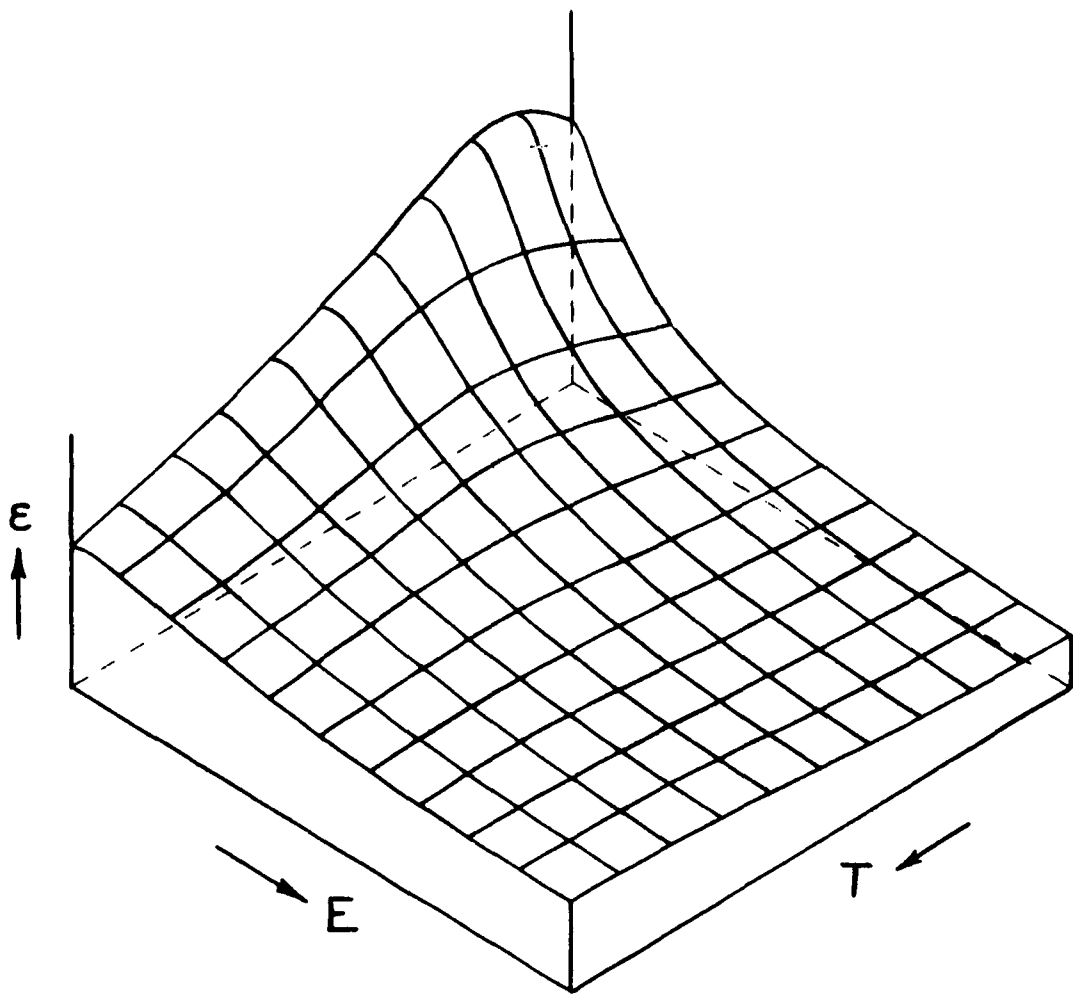

A typical Dielectric Constant-Electric Field Intensity-Temperature Surface

FIGURE 1

nonlinear dielectric[3] as shown in Figure 2. If losses in both the coaxial line and the nonlinear dielectric are neglected the equivalent circuit is simply a transmission line terminated with a capacitor. The capacitor may be made to be a variable capacitor by applying a voltage between the inner and outer conductors since this will change the dielectric constant of the capacitor. As the capacity of the terminating element is varied the null of the standing wave is shifted. The null shift measurement aparatus is shown in Figure 3a. As a dc bias voltage is applied across the nonlinear dielectric the phase of the standing wave moves as shown in Figure 3b. The voltage null on the transmission line approaches the position of the voltage null for the short-circuited condition as the reactance becomes lower.

This reflective type phase shifter can be made into a transmission phase shifter by using two matched reflective phase shifters and a 3 db hybrid.

The null shift of the circuit in Figure 2 may be described in terms of the initial and final impedance of the

3. Howard Diamond, "Microwave Shifting by Ferroelectric Elements", Sylvania Electronic Denfense Laboratory paper EDL-M134.

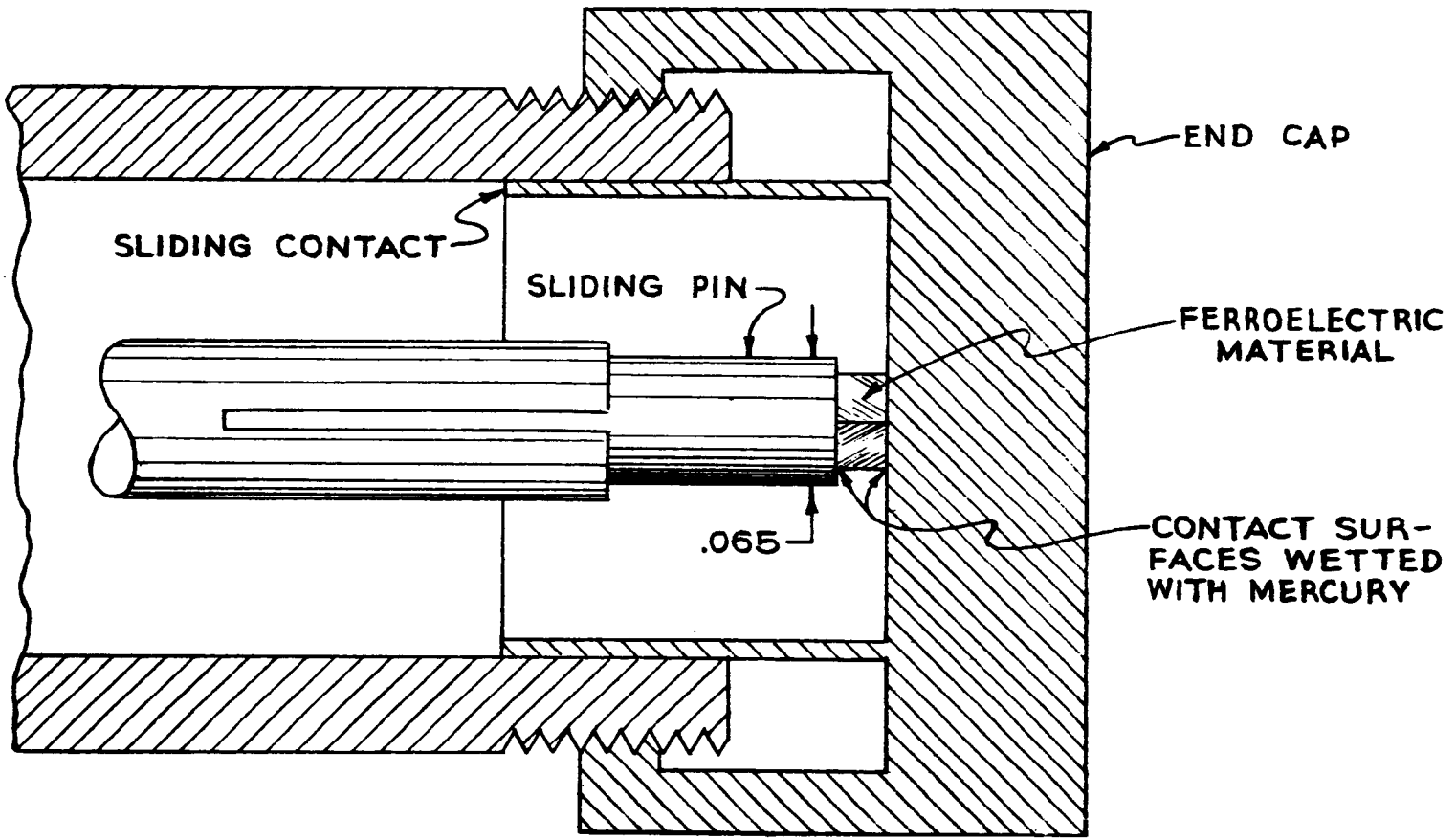

50 OHM COAXIAL TEST FIXTURE

FIGURE 2

WILSON 18 OCT 60

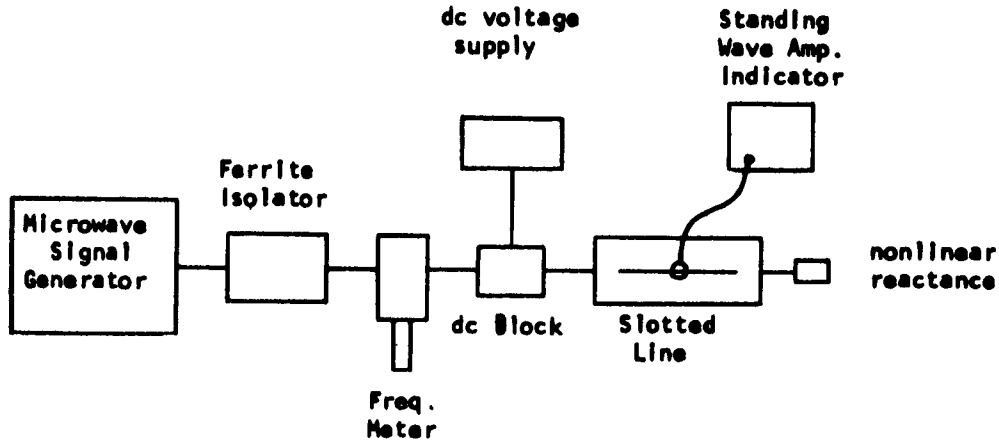

a. Arrangement of Testing Equipment

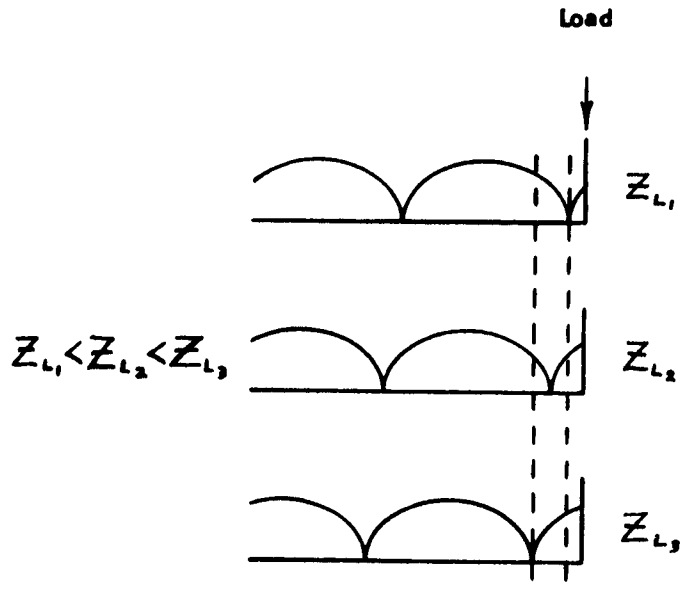

b. Position of Standing Wave for Various Terminating Impedances

FIGURE 3

capacitor Z_1 and Z_2 respectively and the impedance of the coaxial line.

The voltage on the transmission line may be written

$$V = \frac{I_L}{2}\left[(Z_L + Z_0)e^{-j\beta y} + (Z_L - Z_0)e^{j\beta y}\right] \tag{1}$$

where I_L is the current at the load

Z_L is the load impedance

Z_0 is the line's characteristic impedance

β is the lossless propagation constant

y is the distance from the load

If Z_L is a pure reactance then at certain points on the line $V = 0$. As the reactance is varied the position of the voltage minimum will move which shows that a phase shift would occur. The position of the voltage null will be:

$$y = \frac{1}{j2\beta} \ln\left[-\frac{Z_L + Z_0}{Z_L - Z_0}\right] \tag{2}$$

The voltage null shift as the reactance is varied is:

$$\Delta\phi = \beta y_1 - \beta y_2 = \frac{1}{j2} \ln\left[\frac{(Z_{L_1} + Z_0)(Z_{L_2} - Z_0)}{(Z_{L_1} - Z_0)(Z_{L_2} + Z_0)}\right] \tag{3}$$

Rewriting the equation 3 gives:

$$e^{j2\Delta\phi} = \frac{(Z_{L_1}+Z_o)(Z_{L_2}-Z_o)}{(Z_{L_1}-Z_o)(Z_{L_2}+Z_o)} \tag{4}$$

Assuming the lossless case $Z_{L_1} = -j|Z_{L_1}|$ and $Z_{L_2} = -j|Z_{L_2}|$ and equating real and imaginary quantities $\Delta\phi$ may be found:

$$\Delta\phi = \frac{1}{2}\cos^{-1}\left[\frac{(Z_{L_1}Z_{L_2}+Z_o^2)^2 - (Z_{L_2}-Z_{L_1})^2 Z_o^2}{(Z_{L_1}Z_{L_2}+Z_o^2)^2 + (Z_{L_2}-Z_{L_1})^2 Z_o^2}\right] \tag{5}$$

where the absolute value markings have been omitted from Z_{L_1} and Z_{L_2}. Since the termination impedance is a variable reactance let $nZ_{L_1} = Z_{L_2}$ and normalize impedances $Z_N = \frac{\sqrt{Z_{L_1}Z_{L_2}}}{Z_o}$. Then

$$\Delta\phi = \frac{1}{2}\cos^{-1}\left[\frac{nZ_N^4 - (n^2-4n+1)Z_N^2 + n}{nZ_N^4 + (n^2+1)Z_N^2 + n}\right] \tag{6}$$

This equation describes the null shift in terms of the normalized termination impedance and the relative change in dielectric constant of the termination. Voltage null shift as a function of Z_N for various values of n is shown in Figure 4. As n, (which may be considered the amount of nonlinearity in the dielectric) increases the maximum amount of voltage null shift increases also, providing that

the proper initial impedance is chosen. The maximum value of the voltage null shift occurs at $Z_N = 1$ for each n curve. Therefore, the proper initial impedance for the maximum voltage null shift is $Z_{L_1} = \frac{Z_0}{\sqrt{n}}$. This means that the initial impedance of the terminating capacitor must be lower than the impedance of the transmission line by the same ratio as the impedance of the transmission line to the final impedance of the terminating capacitor for maximum null shift.

The voltage null shift will be frequency dependent as Z_{L_1} and Z_{L_2} are frequency dependent. To find the null shift at any frequency away from any known frequency enter the null shift in Figure 4. Then multiply the normalized impedance of the known null shift frequency by the ratio of the known null shift frequency to the unknown null shift frequency. The intercept of that product with the same n line will give the unknown null shift.

The limiting case of maximum voltage null shift occurs when $n \rightarrow \infty$. The null shift would then approach 90°. The maximum possible voltage null shift is shown as a function of the nonlinearity, n, in Figure 5. The voltage null shift is actually one-half the microwave phase shift.

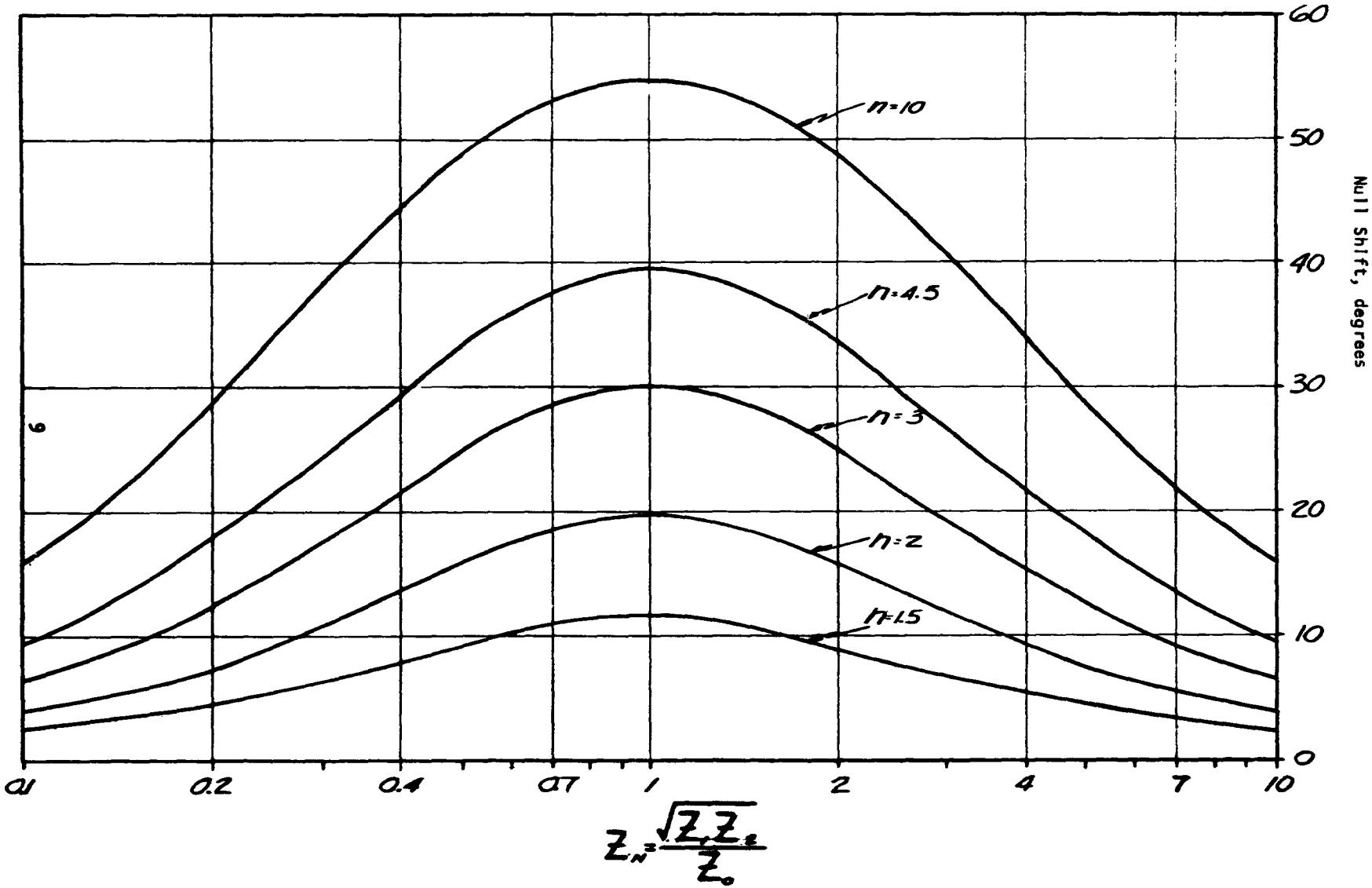

VOLTAGE NULL SHIFT AS A FUNCTION OF Z_N

Figure 4.

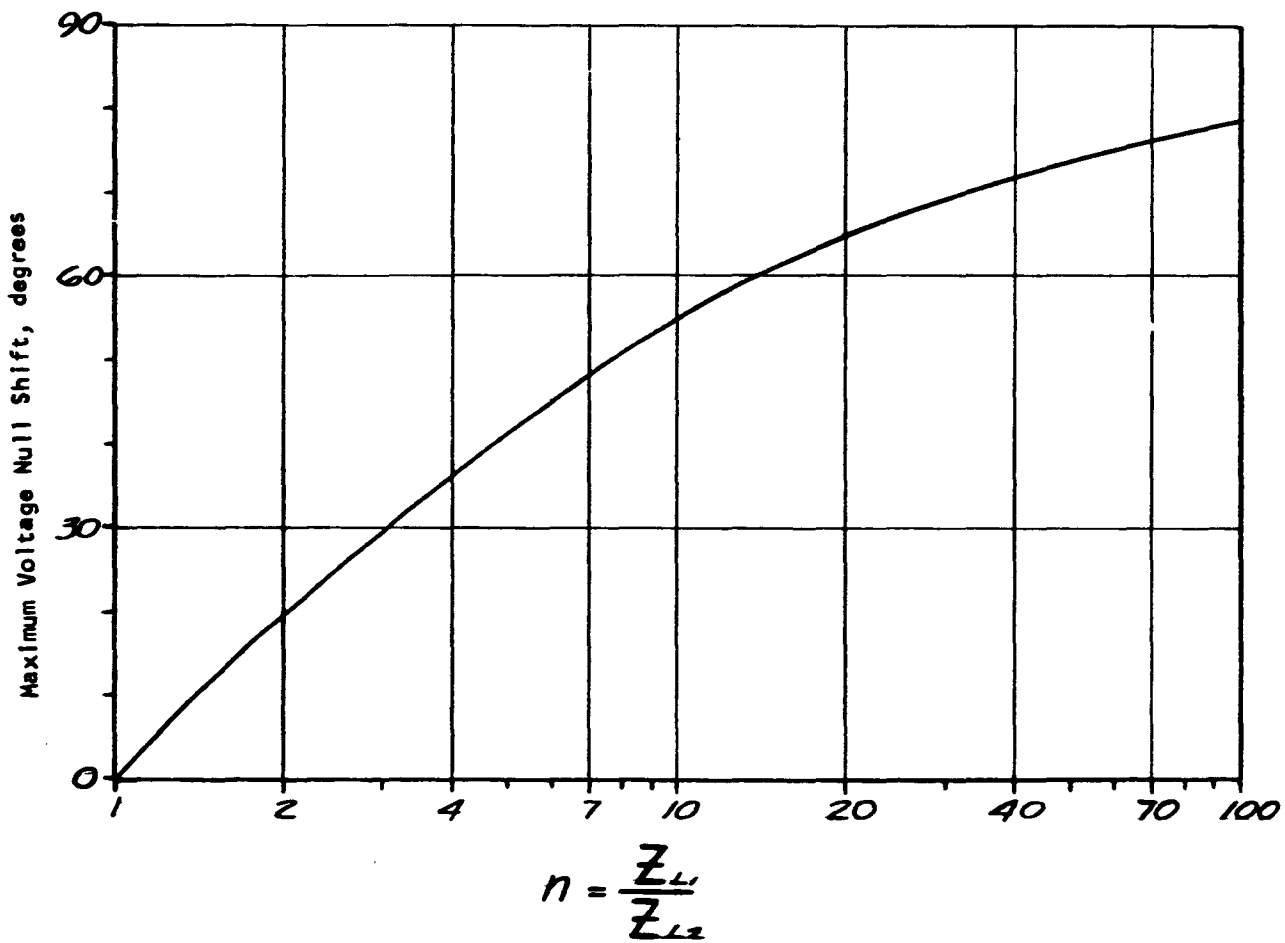

MAXIMUM VOLTAGE NULL SHIFT AS A FUNCTION
OF FERROELECTRIC NONLINEARITY

Figure 5.

The microwave loss of the variable reactance termination phase shifter may be calculated from the VSWR of the device by the expression:

$$\text{Return Loss} = 10 \log \left[\frac{S+1}{S-1} \right]^2 \tag{7}$$

where the return loss is in db and S is the VSWR. The curve of this expression is given in Figure 6.

Experimental Results and Comparison to Theory

Thin flat plates of ferroelectric which had silver electrodes on both major surfaces were cut into small square pieces. These pieces were mounted in a test fixture as shown in Figure 2. The electroded surfaceswere mounted against the end of the center conductor and against the end of the outer conductor. The center conductor of the test fixture had a spring loaded sliding contact so that the end position could be changed at will. This was desirable as different thicknesses of ferroelectric material could then be tested in the same fixture. The sliding pin also eliminated excessive pressure upon the ferroelectric element as the end of the outer conductor was screwed down to make contact with the electrode.

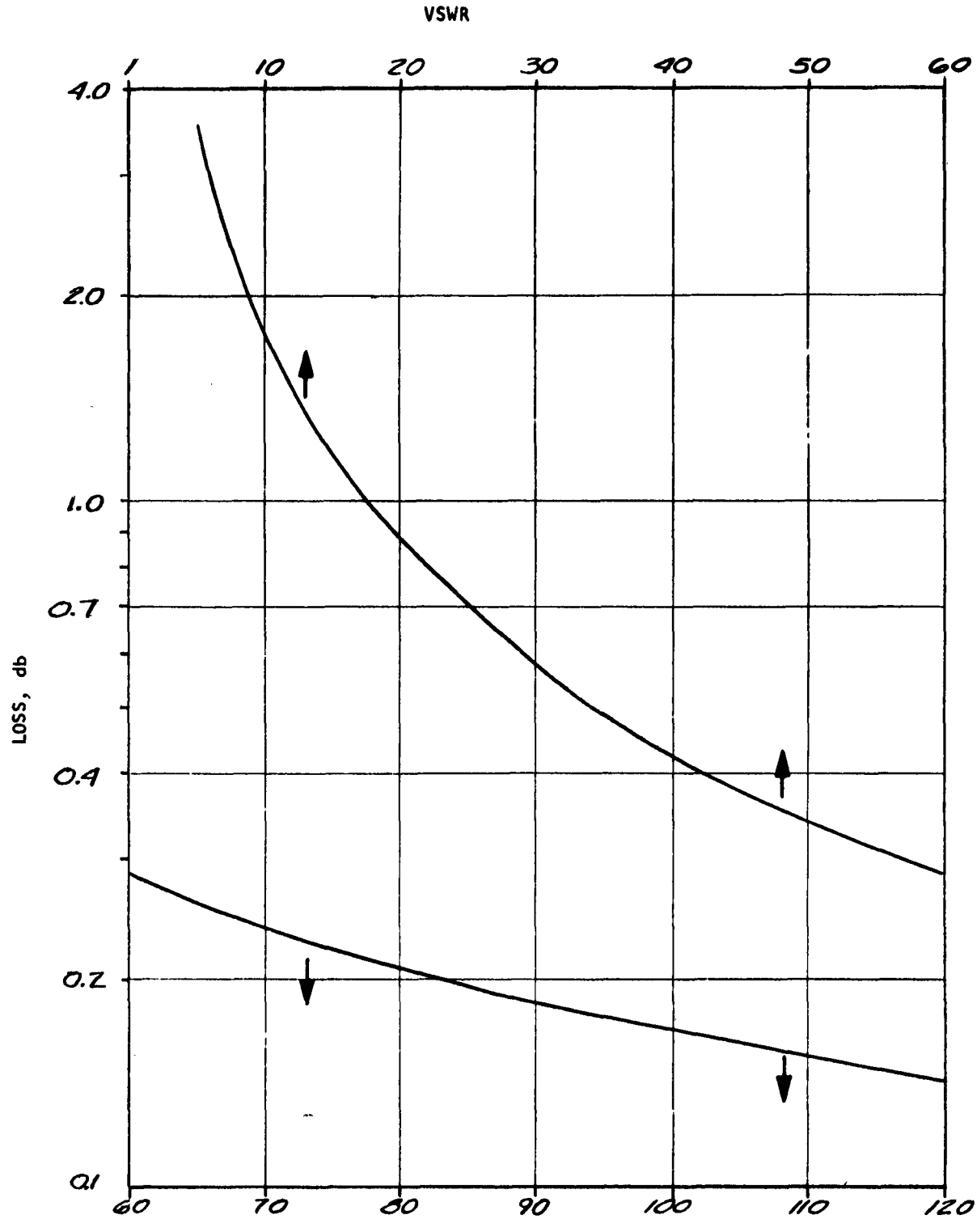

Return Loss as a Function of VSWR

Figure 6.

Mercury was used to hold the ferroelectric pieces in the test fixture. There were several reasons for the use of mercury. As the center conductor, outer conductor, and both ferroelectric electrodes were wetted with minute amounts of mercury good electrical contact was assured. The surface tension of the mercury held the ferroelectric firmly in place but provided a bearing surface so that small torsion forces between the inner and outer conductor did not crush the ferroelectric. These forces were generated whenever the phase shifter was assembled. If too much mercury was used then voltage breakdown would occur at the edge of the ferroelectric where the mercury would rise beyond the ferroelectric electrode. By using the proper amounts of mercury, electric field intensities of more than 60 Kv/inch could be attained.

The use of mercury did have one disadvantage. The mercury amalgamated with the silver electrode and loosened the bond to the ferroelectric. Whenever a piece of ferroelectric was used more than five or six times an electrode would come off and the piece would have to be discarded.

Null shift was obtained by applying a voltage between the inner and outer conductor of the test fixture. Null shift and loss as a function of electric field intensity are shown

in Figure 7 for a 0.015 x 0.015 x 0.020 inch piece of body BKPIA made by Aerovox. The null shift increases as the electric field intensity increases, as anticipated. The large region of linear dependence, of the null shift on the electric field intensity was not expected as this is an involved function of the dielectric constant vs. electric field intensity, the impedance of the variable capacitor relative to the impedance of the transmission line, and the total change of the dielectric constant. In this particular instance, except for the region of high field intensities, the null shift is linear with electric field intensity. At high field intensities a region of nonlinearity approaching saturation is observed at 1 Gc. If a higher field intensity was applied then saturation would be seen at 2 Gc also.

Null shift data on larger cross sectional pieces of BKPIA show nonlinear null shift at low field intensities. The null shift then becomes linear at high field intensities. At still higher field intensities saturation would occur although this was seldom seen experimentally.

The frequency dependence of the null shifter is to be expected from the theory as the variable reactance termination is inherently frequency sensitive. Here again, the

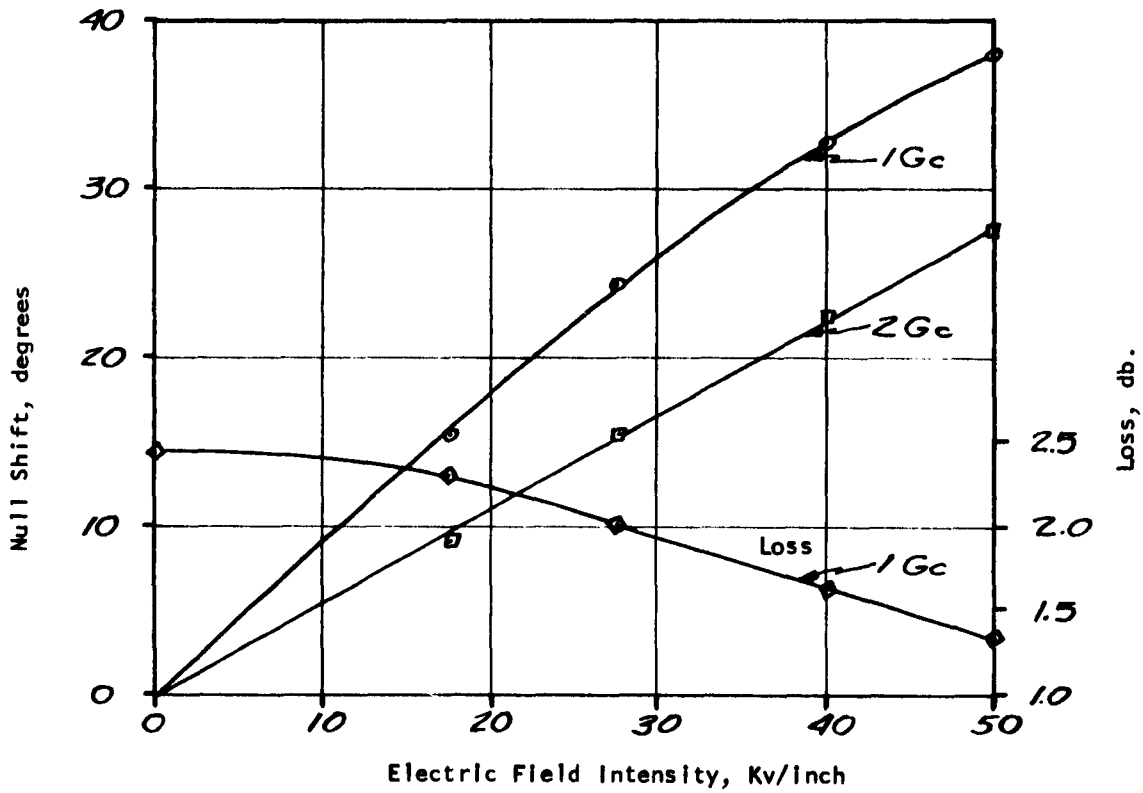

Null Shift and Loss as a Function of Electric Field Intensity for a 0.015 x 0.015 x 0.020 inch piece of Aerovox BKPIA.

Figure 7.

frequency dependence is a complex function of termination impedance, total change in dielectric constant, and dielectric constant vs. electric field intensity. The experimental data of Figure 7 shows that the null shift at 1 Gc is 38° while the null shift at 2 Gc is 27° for 50 Kv/inch electric field intensity. The ratio of the null shift at 1 Gc to the null shift at 2 Gc is about 1.5. This null shift ratio was found to be between 1.3 and 2.0 for almost all of the experimental data which was gathered. The one or two exceptions to this statement will be discussed later.

The data of Figure 7 also shows that the geometric mean of the product of the initial and final terminating impedances is smaller than the impedance of the transmission line. If the converse were true, the maximum null shift for the next higher frequency would increase. A larger termination impedance could be made by increasing the length, the distance between the electrodes of the ferroelectric, or decreasing the cross sectional area of the ferroelectric.

The loss of the phase shifter of Figure 7 is a decreasing function of electric field intensity. The loss at 1 Gc is shown to vary from 2.5 db at 0 Kv/inch to 1.4 db at 50 Kv/inch. Similar loss and loss variation was measured at 2 Gc. The loss

variation as a function of electric field intensity appeared to be a function of cross sectional area for the Aerovox BKPIA ferroelectric. There was little change in loss as the electric field was varied for pieces which were 0.020 inches on a side. Pieces which were smaller on a side had decreasing loss as the electric field increased while pieces which were larger on a side had increasing loss as the electric field increased. Since the Aerovox BKPIA was the only material that was extensively used it is not known whether or not this size loss behavior is peculiar to this material or is a general phenomenon.

The effect of the cross sectional area on null shift was measured. Electric field intensities of zero and 50 Kv/inch were used. The impedance of the transmission line was 50 ohms. The data, taken at 1 Gc except where noted, are shown in Figure 8 for Aerovox body BKPIA for the best fit condition. It is apparent that a piece of body BKPIA only 0.015 inches on a side has a reactance which is too small for optimum results. A piece of body BKPIA 0.013 inches on a side would, however, be the optimum size, so near optimum performance was actually realized. Manufacturing techniques prohibited the machining of smaller cross section pieces. This problem will be discussed at greater length later in the report.

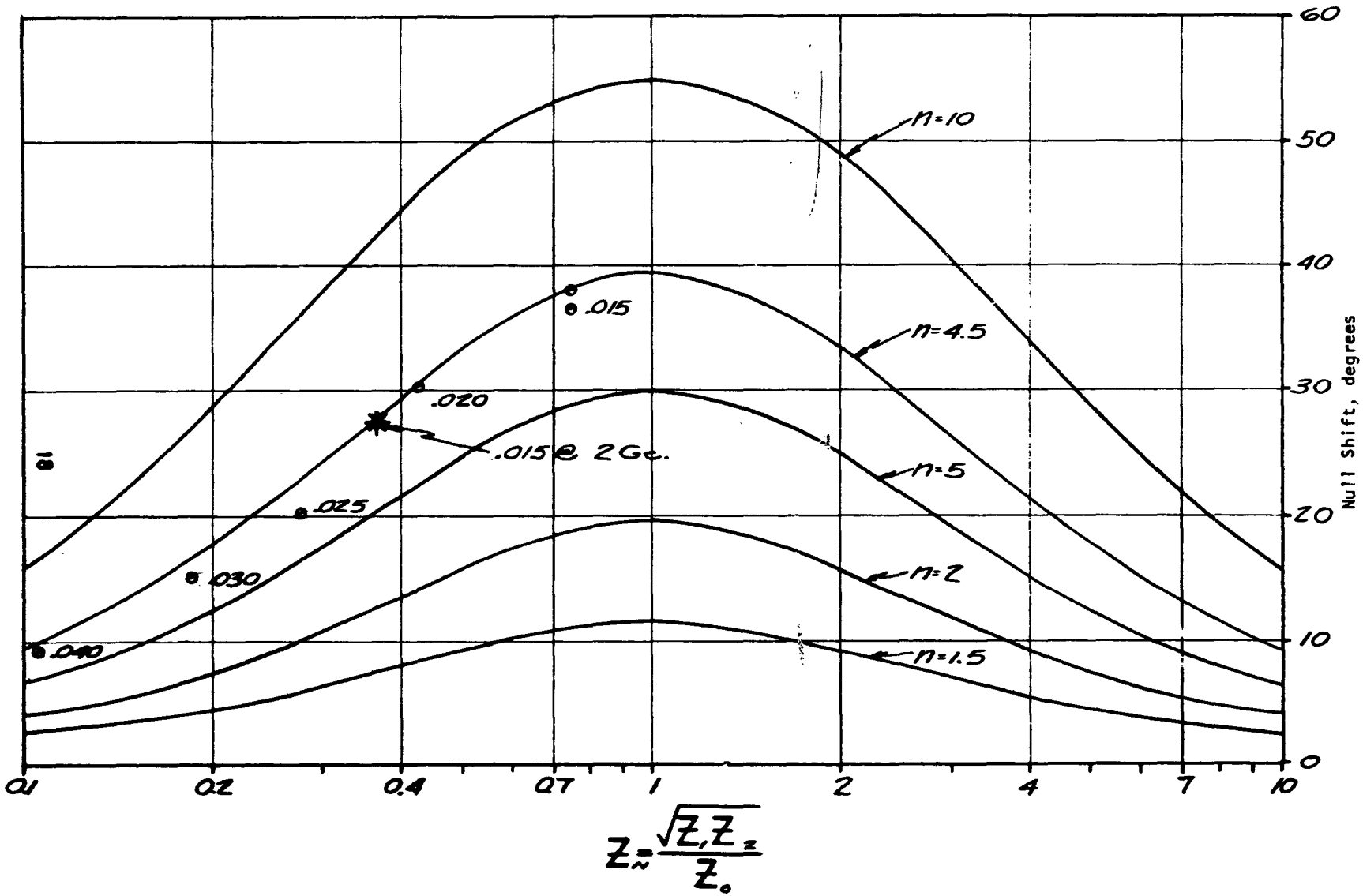

Null Shift for Various Sizes of Aerovox BKPIA

Figure 8

Included in Figure 8 is a datum point taken at 2 Gc for the BKPIA piece which was 0.015 inches on a side. The normalized impedance of this piece at 2 Gc was one-half what it was at 1 Gc. Since the null shift was 27.4° the point falls on the same curve as does the data taken at 1 Gc, which was expected.

The theory seems to be in good agreement with the experimental data. Thus the null shift is indeed controlled by the relative impedance of the terminating element.

An attempt was made to get a piece of BKPIA which was small enough to give more null shift at 2 Gc than at 1 Gc. This was done by taking a piece of BKPIA about 0.015 x 0.015 and then removing a portion of the electrode. The experimental data showed that for electric field intensities up to 27.5 Kv/inch the null shift at 1 Gc was more than at 2 Gc. At all higher field intensities the null shift at 2 Gc was more. While the impedance of this particular piece of material was complicated by the fact that only part of the material was having its dielectric constant changed the results did show that for two frequencies the same null shift could be obtained and that more null shift could be obtained at a higher frequency. Both of these results are, of course, predicted by the theory.

One way to evaluate the performance of a microwave phase shifter is to define a figure of merit. A reasonable figure

of merit for a phase shifter would be the phase shift divided by the loss. The figure of merit for Aerovox BKPIA was 30 degrees per db while for Gulton body $Ba_{.73}Sr_{.27}TiO_3$ it was 82 degrees per db. These two bodies were the same thickness and were subjected to the same electric field intensity, 50 Kv/inch. They were also near optimum phase shifters. The phase shifter using the Gulton material gave 100 degrees per db when it was subjected to 60 Kv/inch. Even better figures of merit are possible as higher electric field intensities are used. The loss which was used in determining the figure of merit was the largest loss which was obtained as the electric field intensity was varied.

An alternate approach to obtain an optimum reactance phase shifter would be to use a lower impedance transmission line instead of reducing the cross sectional area of the nonlinear material. A transition from 50 ohm to 3 ohm transmission line was made.[4] The design of the low impedance transmission line was such that the end plate of the outer conductor moved to make contact with the nonlinear dielectric which was rest-

4. This is similar to a test fixture used for making dielectric measurements by C. B. Sharpe & C. G. Brockus, "Investigation of Microwave Properties of Ferroelectric Materials". University of Michigan Report, March 1959.

ing on the end of the center conductor. The center conductor and the movable end plate were massive structures compared to the nonlinear dielectric.

The ferroelectric was crushed whenever the unit was assembled except once. A null shift of 46.8 degrees was measured along with losses of up to 6 db using Aerovox BKPIA. This does not correlate with the theory as the phase shift is 20% higher than anticipated for optimum performance. The loss of this device was twice as high as any loss which was measured in the 50 ohm fixture. This approach was pursued concurrently with the other approach and was abandoned because of the high breakage of the ferroelectric pieces, high loss and increasingly favorable results of the other approach.

While there was a couple of practical defects in the particular 3 ohm line that was constructed, the approach is certainly sound and may be very useful to other investigators.

Phase shift as a function of electric field intensity for several temperatures is shown in Figure 9 for Aerovox Body BIK 50. The effect of temperature is certainly pronounced in this material as well as the other materials which were investigated. Use of this phase shifter in a device would probably require some method of temperature stabilization or matching

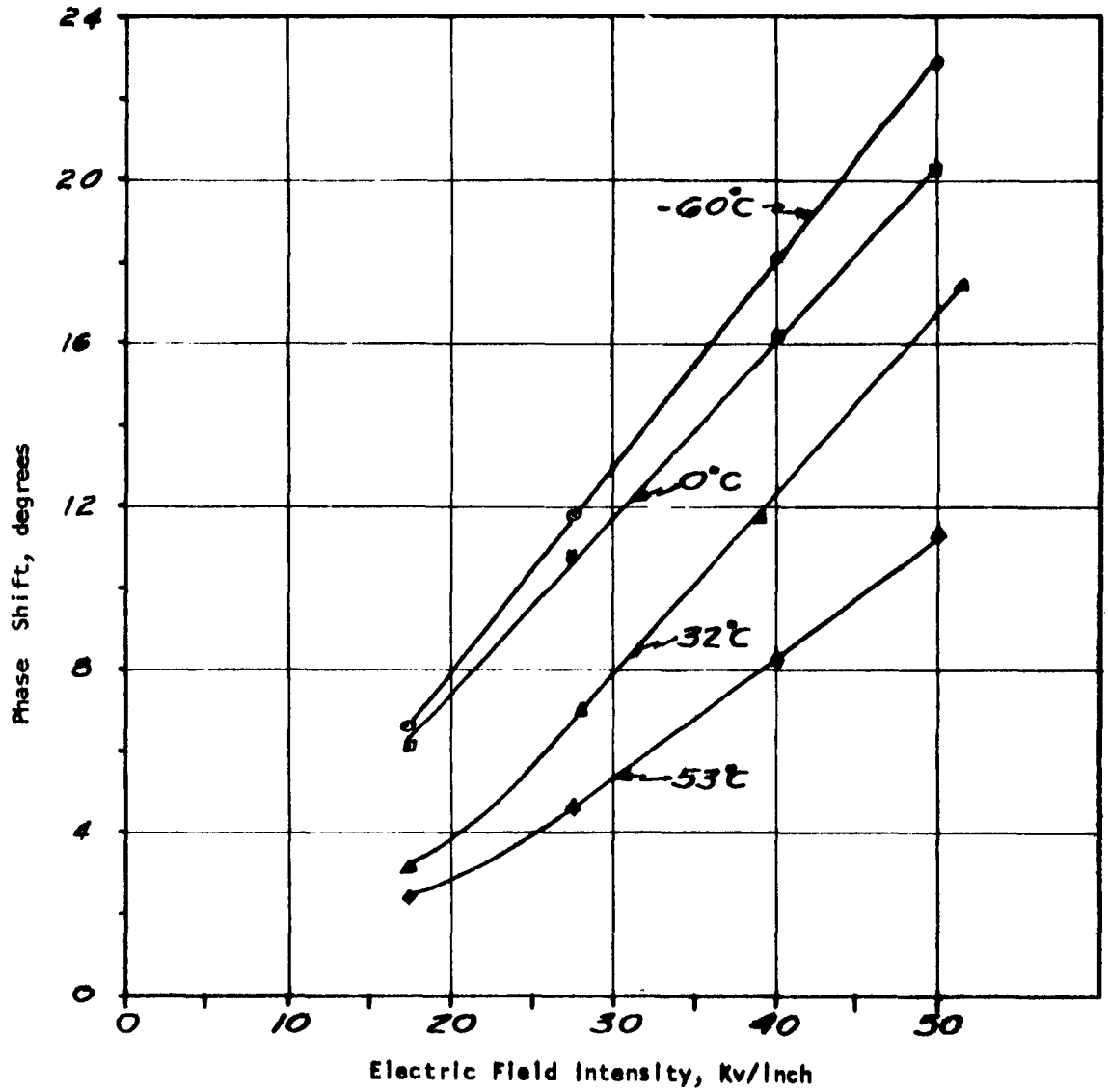

Phase Shift as a Function of Electric Field Intensity at Several Temperatures

Figure 9.

the phase shifter element with another element which has the opposite temperature characteristics. The latter would be very difficult as phase shift is dependent on temperature, change in dielectric constant, and size with the combined effect being the opposite of that of some other material.

Equation (6) may be used to determine the thermal drift for a constant field intensity since the equation was actually derived for a change in impedance independent of the mechanism causing the change.

DC Block and Voltage Lead In

A dc voltage block and lead in are both required for the reactively terminated phase shifter. The latter is needed to apply the electric field intensity for phase shifting while the former is needed to keep the dc voltage off of all but the very end of the transmission line.

The dc blocks used in this investigation were of standard Caswell Electronic Corporation design which were developed prior to the award of the contract. The dc blocks had a VSWR of less than 1.35:1 from 1 to 4 Gc. The working voltage was rated at 3 Kv although the units were tested to 4 Kv. The insertion loss was less than 0.2 db at the design frequencies.

A voltage lead in had to be developed for this particular application. Several different approaches were tried. The design which was used was easy to construct although it was moderately large in size. No attempt was made to reduce the size as this was not the aim of the investigation. The electrical loss was less than 0.4 db from 1 to 2 Gc. The VSWR was less than 1.45 from 1.0 to 1.3 Gc and less than 1.15 from 1.3 to 2.0 Gc. The voltage lead in was tested to 1.7 Kv. The construction of the voltage lead in is shown in Figure 10.

Permanently Mounted Phase Shifters

Development of a usuable phase shifter required permanent mounting of the ferroelectric along with the incorporation of a dc block and voltage lead in. The dc block and voltage lead in described in the preceeding section were used. The r-f output connector of the voltage lead in unit was made to be identical to the end of the 50 ohm coaxial test fixture.

The first attempt at securing the nonlinear dielectric to the coaxial transmission line was to directly substitute solder for the mercury of the test fixture. However, the thermal expansion and contraction of the center conductor and the outer conductor during the soldering and cooling process pulled

SYM	REVISION	BY	DATE	APPR.

A - 00884 -

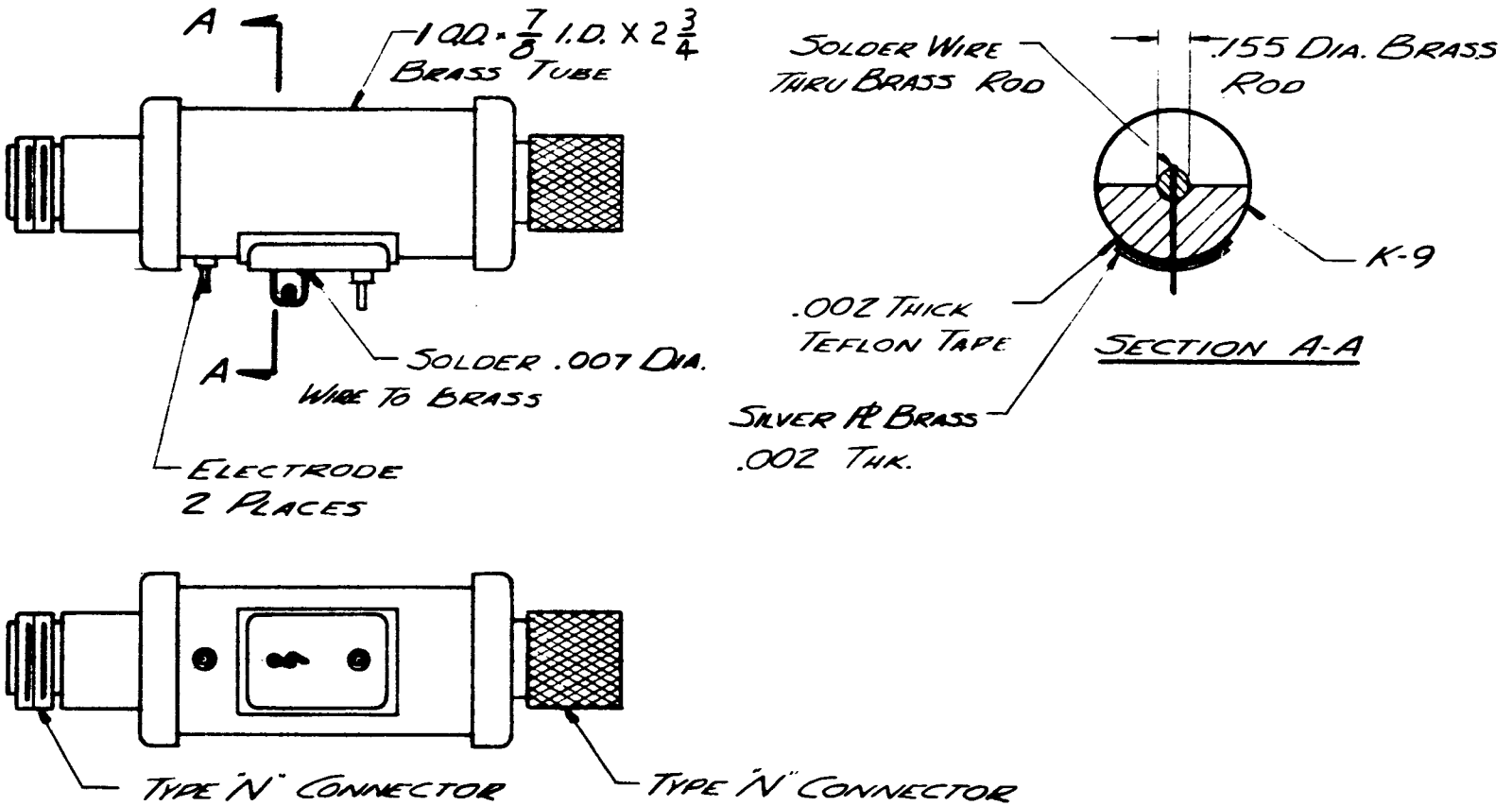

FIGURE 10

SCALE	MATERIAL	DRAWN BY				
TOLERANCES FOR CONDITIONS SPECIFIED ARE:		DRAWN	Persio	7/5/62	DC. VOLTAGE LEAD IN	CASWELL ELECTRONICS CORP. 414 QUEENS LANE • SAN JOSE • CALIF.
		CHECK	R. Orrid	7/17/62		SIZE A-00884- REV

the electrodes off of the nonlinear dielectric pieces. Therefore, an arrangement which approximat this was used. The ferroelectric piece was soldered to the end of a 0.003 inch copper wire. The other end of the ferroelectric was soldered to the end of the center conductor of the coaxial line. The ferroelectric was then encapsulated in a small drop of parafin for insulation purposes. The end of the outer conductor with a small hole cut in it was then placed in the same relative position as it was in the test fixture. The 0.003 inch diameter wire was run through the hole, bent over, and fastened to the outer conductor. The assembly drawing of this is shown in Figure 11. Since the end plate of the outer conductor is not adjacent to the ferroelectric electrode, as in the test fixture, the phase shift and the loss are somewhat effected.

The phase shift and loss for the two phase shifters are shown in Figure 12 as a function of frequency. It is apparent that the phase shift and loss are not a smooth function of frequency. These data were not expected. It appears as though the coupling of r-f energy into the ferroelectric is affected by the wire on the end of the ferroelectric and the hole in the outer conductor. The ferroelectric which was used was Gulton $Ba_{.73}Sr_{.27}TiO_3$. At one time both of these phase shifters were

SYM	REVISION	BY	DATE	APPR.

A-00885-

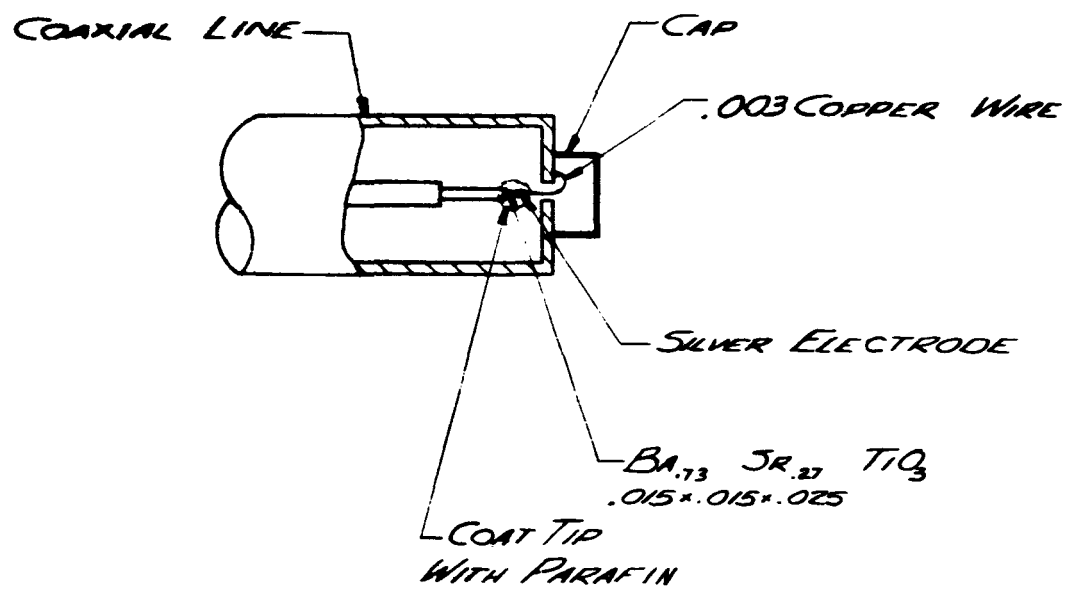

FIGURE 11

SCALE	MATERIAL						
				DRAWN	Persyo	5/30/62	REFLECTIVE PHASE SHIFTER
				CHECK	R. O'Neill	9/17/62	

CASWELL ELECTRONICS CORP.
414 QUEENS LANE • SAN JOSE • CALIF.

SIZE A-00885- REV

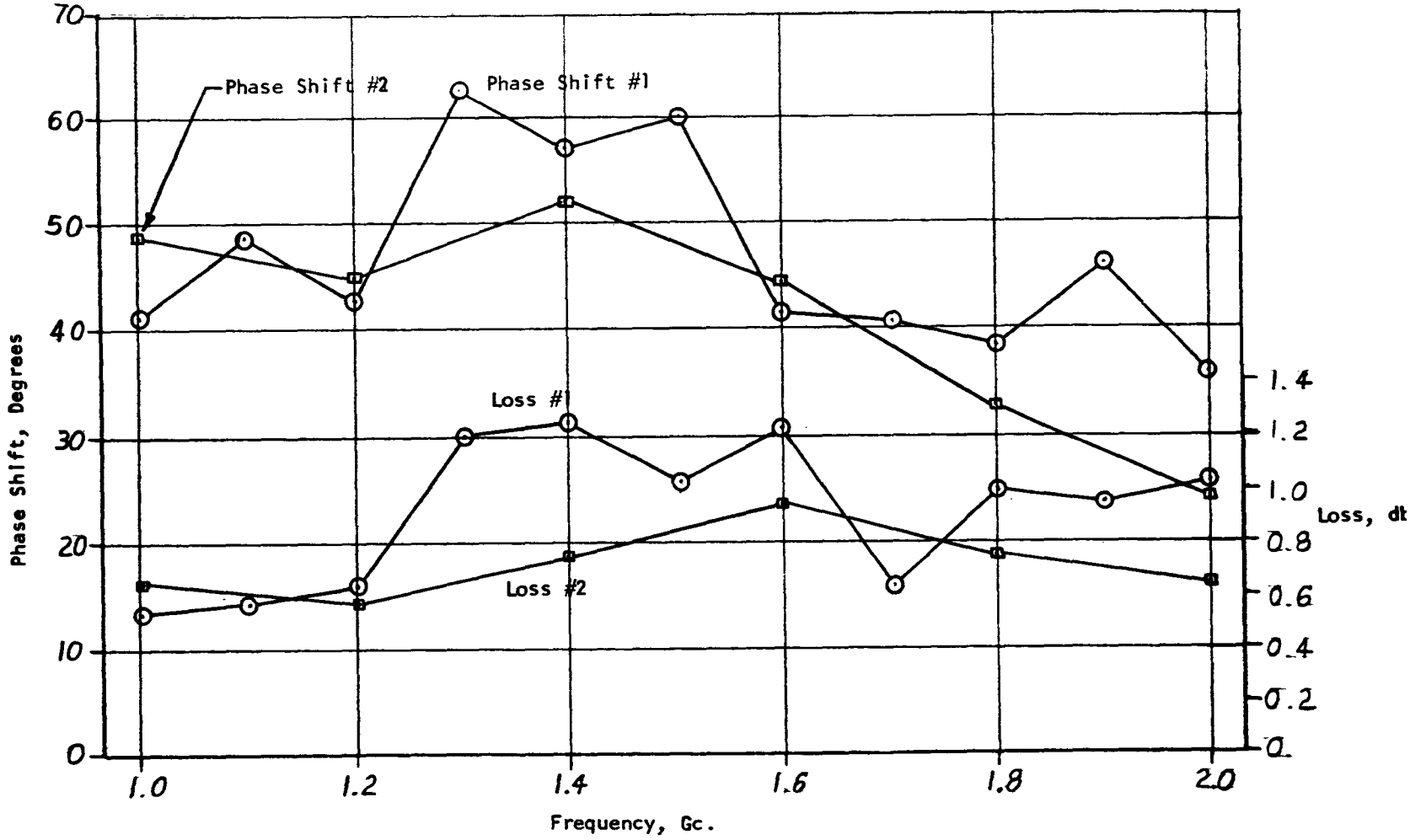

Phase Shift and Loss of Two Permanently Mounted Phase Shifters

Figure 12.

nearly identical in absolute and relative phase shift. However, something happened to phase shifter NL-157-A, Serial #2, and its characteristics changed. Just what happened is unknown.

Transmission Phase Shifter Using Two Reactively Terminated Lines.

A transmission type phase shifter using two variable reactance termination phase shifters and a 3 db hybrid was constructed. The construction and characteristics of the variable reactance phase shifters were described in the preceeding section.

The phase shifters had to be matched in absolute phase shift and also in a variable phase shift. If these conditions were not met then the transmission phase shifter would have a large VSWR due to the first defect and a variable VSWR due to the latter defect. The relative and absolute phase shift difference between the two phase shifters for all bias voltages was less than 9.5° at the design frequency of 1.2 Gc and not much worse than that over the octave from 1 to 2 Gc. The two phase shifters were connected with UG 57B/U connectors to a Narda, Model 3032, 3 db coaxial hybrid to form the transmission phase shifter.

The transmission phase shifter was measured in two different ways. One way was to use a slotted line connected to

one arm of a ferrite circulator. The transmission phase shifter was connected to the other two arms. A standing wave was thus produced in the slotted line as the microwave energy went from the slotted line into port 1 of the circulator, out port 2 into the phase shifter, out of the phase shifter, into port 3 of the circulator and out port 1 into the slotted line. The change of the null of the standing wave on the slotted line can easily be related to the phase shift in the phase shifter. The null shift of the transmission phase shifter compares very closely to the null shift of the individual termination phase shifters as shown in Table 1.

The second way which the phase shift was measured also used a slotted line so that a standing wave null shift could be detected. The input of the phase shifter was connected directly to the slotted line while the output of the phase shifter was shorted. The null shift data taken in this way had poor correlation with the individual termination phase shifters. This poor correlation can be explained fairly easily. It is due to the unbalance of the hybrid and the unbalance and the losses of the individual phase shift elements as the main wave must traverse through the phase shifter

Electric Field Intensity, Kv/inch	Reflective Phase Shifter #3	Reflective Phase Shifter #5	Transmission Phase Shifter (#3 and #5)
0	0	0	0
20	19.4	17.8	17.0
30	29.6	28.8	28.6
40	39.0	39.8	38.2
50	48.4	49.2	47.2
60	56.2	57.8	55.2

Comparison of Phase Shifts of Reflective and Transmission Phase Shifters

Table 1.

twice.

The measuring technique using the circulator is much preferred although the frequency range is limited by the performance of the circulator.

The transmission phase shifter had a loss of 0.8 db with zero electric field intensity and 0.9 db when 60 Kv/inch was applied. The loss at intermediate field intensities was between these two limits at the design frequency of 1.2 Gc.

The VSWR of the phase shifter varied from 1.37 at zero electric field intensity to 1.21 at 60 Kv/inch.

The maximum loss and VSWR for the phase shifter were 1.7 db and 1.40 respectively over the octave from 1 to 2 Gc. The phase shift over this region was not measured as the two ferroelectric elements became unbalanced before the data could be run. This completely ruined the transmission phase shifter although the individual termination phase shifters still worked. The reason for the phase shift becoming unbalanced is completely unknown.

A Tunable Traveling Wave Filter

A tunable traveling wave loop filter was made using the coaxial transmission line phase shifter. A sketch of the filter is shown in Figure 13.

The theory of a fixed tuned loop has been described by several authors[5,6,7] and will be but briefly discussed here. Power introduced in port 1 will be strongly coupled to port 4 whenever the transmission line loop connecting the two couplers is an integral number of wave lengths long. Port 3 is isolated for this condition. If the loop is an odd number of half wave lengths long the power would be coupled to port 3 while port 4 would be isolated. Ports 1 and 2 are isolated under all conditions. Since the effective loop length may be controlled by the phase shifter the filter may be tuned or switched.

There are several practical considerations that must be overcome. One of these is the relationship between the loop attenuation, the amount of coupling in the couplers, and the

5. S. B. Cohn and F. S. Coale, "Directional Channel Separation Filters", Proc. IRE, Vol. 44, pp 1018-1024, Aug. 1956.
6. Stanley J. Miller, "The Traveling Wave Resonator and High Power Microwave Testing", The Microwave Journal, Sept. 1960. pp. 50-58.
7. William H. Wright, Jr., "A Proposed Design to Enhance Microwave-Power-Limiter Characteristics", IRE Transaction on Microwave Theory and Techniques, Nov. 1961, pp 575-576.

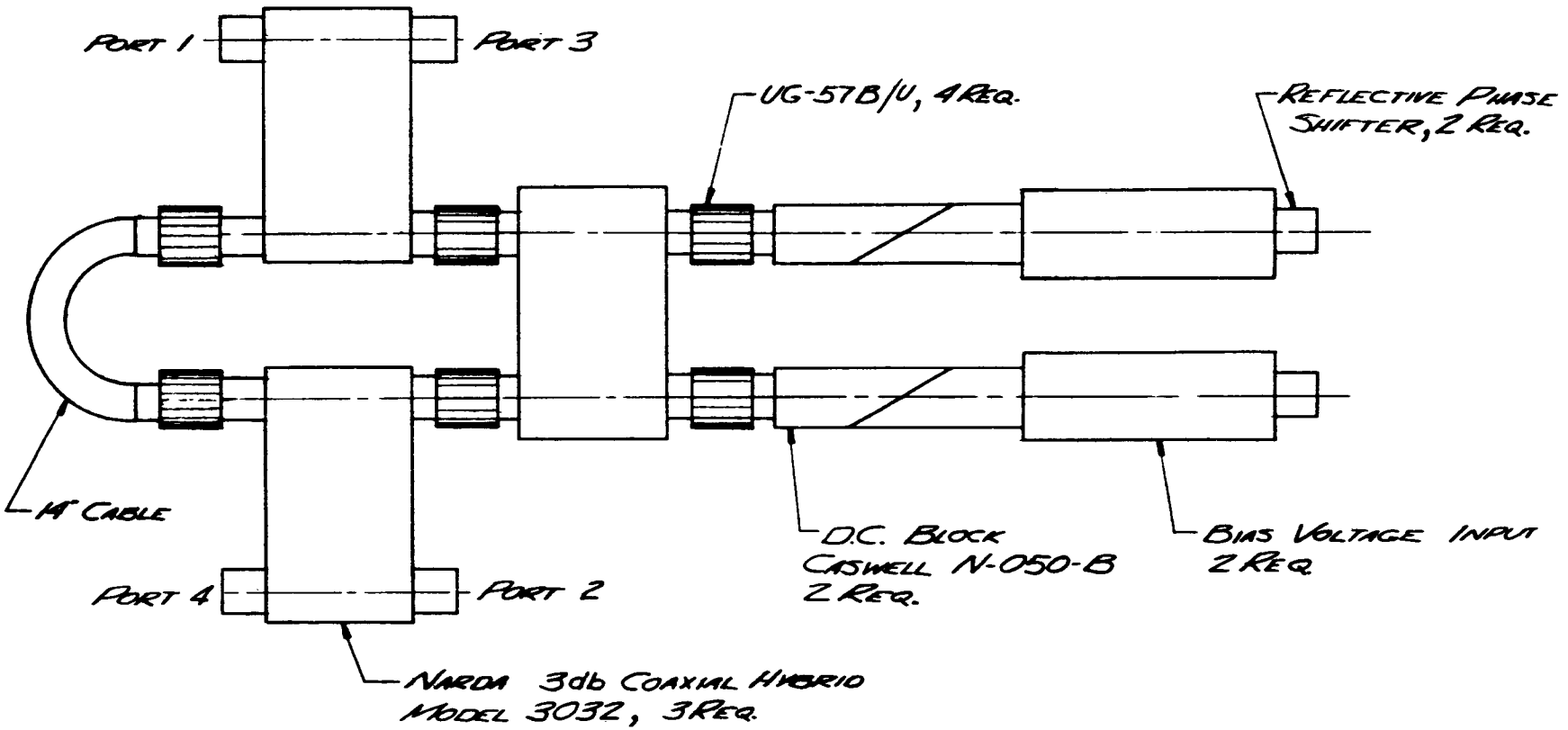

TUNABLE TRAVELING WAVE FILTER

FIGURE 13

amount of energy transferred through the loop to another port. The relationship between the voltage in port 1 and the voltage out port 4 when the loop is an integral number of wavelengths long is[8]

$$\frac{E_4}{E_1} = \frac{a\,b\,C_1\,C_2}{1 - a^2 b \sqrt{1-C_1^2}\,\sqrt{1-C_2^2}} \tag{8}$$

where α = attenuation of one half of ring circuit

a = transmission constant corresponding to α, $a = 10^{-\frac{\alpha}{20}}$

β = attenuation of phase shifter, a function of electric field intensity

b = transmission constant corresponding to β, $b = 10^{-\frac{\beta}{20}}$

C_1 = coupling coefficient of input directional coupler

C_2 = coupling coefficient of output directional coupler

Curves of maximum output power vs. power coupling factor for various values of phase shifters loss are shown in Figure 14. It is assumed that $C_1 = C_2$ and that $a = 1$ since the ring loss should be

8. Ibid.

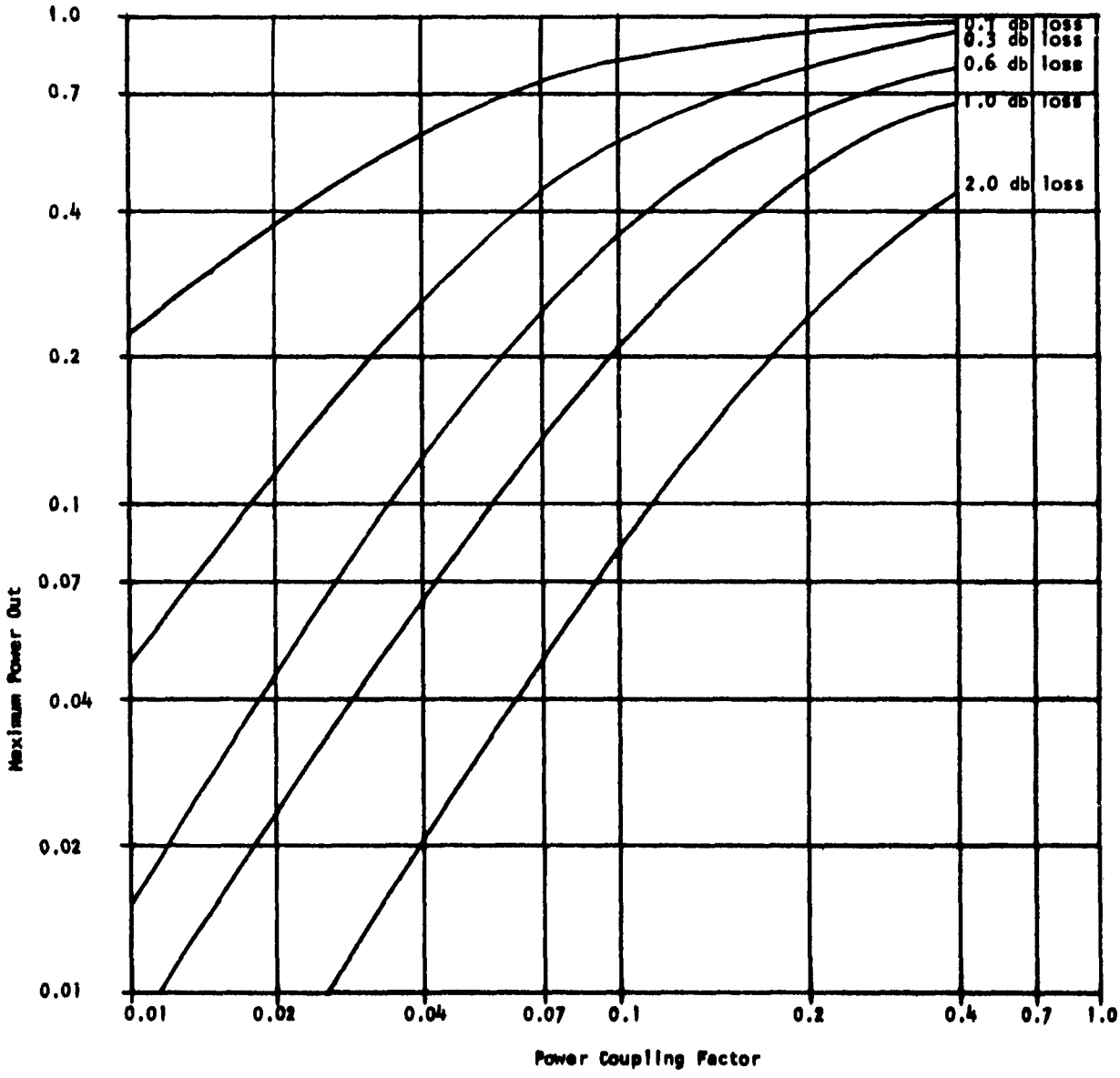

Ratio of Maximum Power Out Port 4 to Power In Port 1 as a Function of Power Coupling Coefficients.

Figure 14.

much less than the loss of the nonlinear dielectric phase shifter and the order of magnitude of the power transfer is of prime interest. It is seen, that for any particular loss, the most power transfer will occur when the coupling coefficients are the greatest. When losses are very low, however, almost any coupling coefficient could be used with almost equal power transfer.

The device which was to be built had to use a phase shifter with about 0.5 db loss. Therefore, maximum power transfer required couplers with large coupling coefficients. Three db couplers were chosen as these had the largest coupling coefficients which were commercially available.

A filter was assembled, as shown in Figure 13, except that the phase shift elements and the dc voltage leadins were replaced with shorts. The attenuation from the input to the other ports is shown in Figure 15 as a function of frequency. No attempt was made to reduce the insertion losses or to reduce the VSWR of the couplers or connectors. The transmission from port 1 to port 4 varied from 0.5 db to 9.6 db while the power from port 1 to port 3 varied from 0.5 db to 38 db. Therefore, it appears that switching between port 1 and port 3 is of more practical importance as greater isolation is possible. From the curves of Figure 15 it is seen that by changing the loop length by relative small amounts the isolation between ports 1 and 3 can be greatly effected.

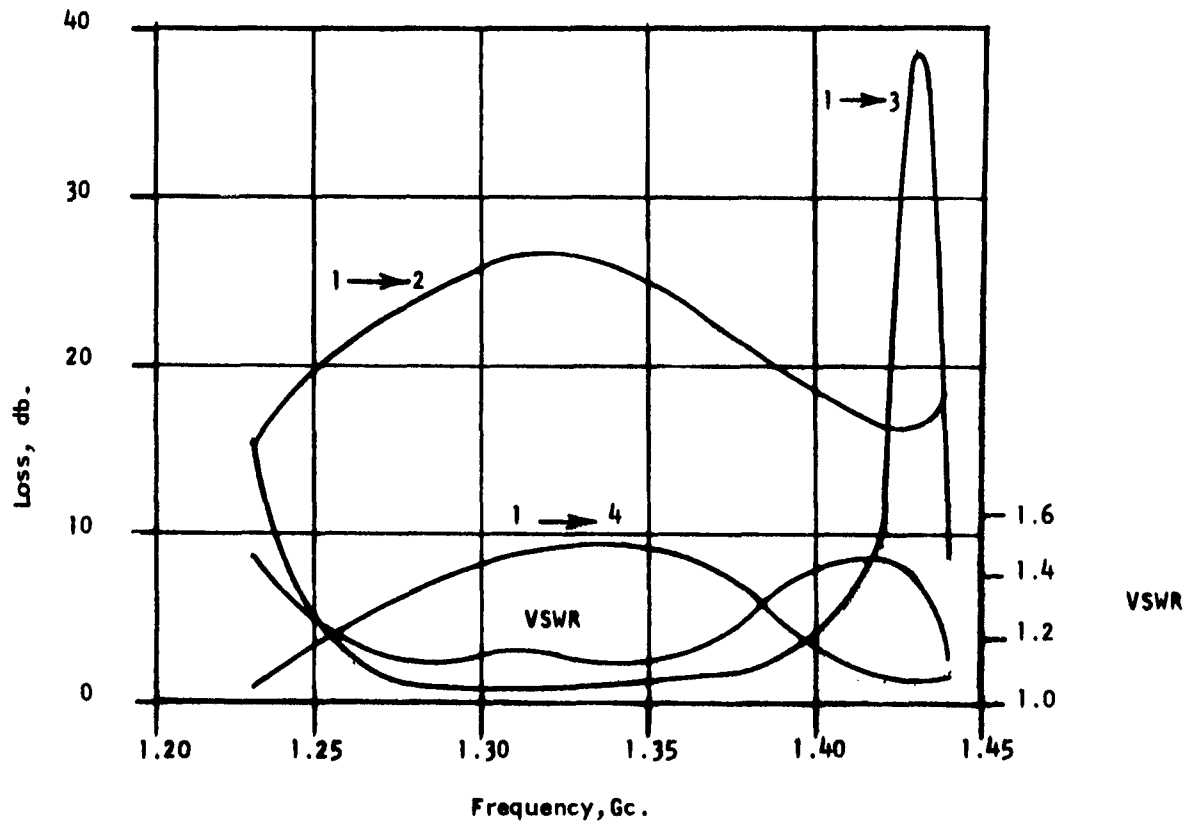

Attenuation from Port 1 to Ports 2,3 and 4 of the Traveling Wave Filter as a Function of Frequency

Figure 15.

The ferroelectric transmission phase shifter which was in the filter had very large changes in absolute phase shift as a function of frequency at zero electric field intensity. This tends to limit the filter to a single frequency of operation. It corresponds to a loop length which is many wavelengths long.

Data taken at 1.195 Gc on the traveling wave filter is shown in Figure 16. Isolation between ports 1 and 3 was reduced from 13.8 to 3.2 db while isolation between port 1 and 4 was increased from 1.7 to 4.8 db. The loop length was changed by 54° as this was the phase shift change. Using the data of Figure 16 it can be seen that starting with 14 db isolation between ports 1 and 3 will drop to about 3.5 db by shifting 54°. This compares very favorably with the measured change.

It should be remembered that 90° phase shifters are possible to build so that improved performance could be expected. While the microwave characteristics of this filter are mediocre the device is interesting because of the fast switching which should be possible.

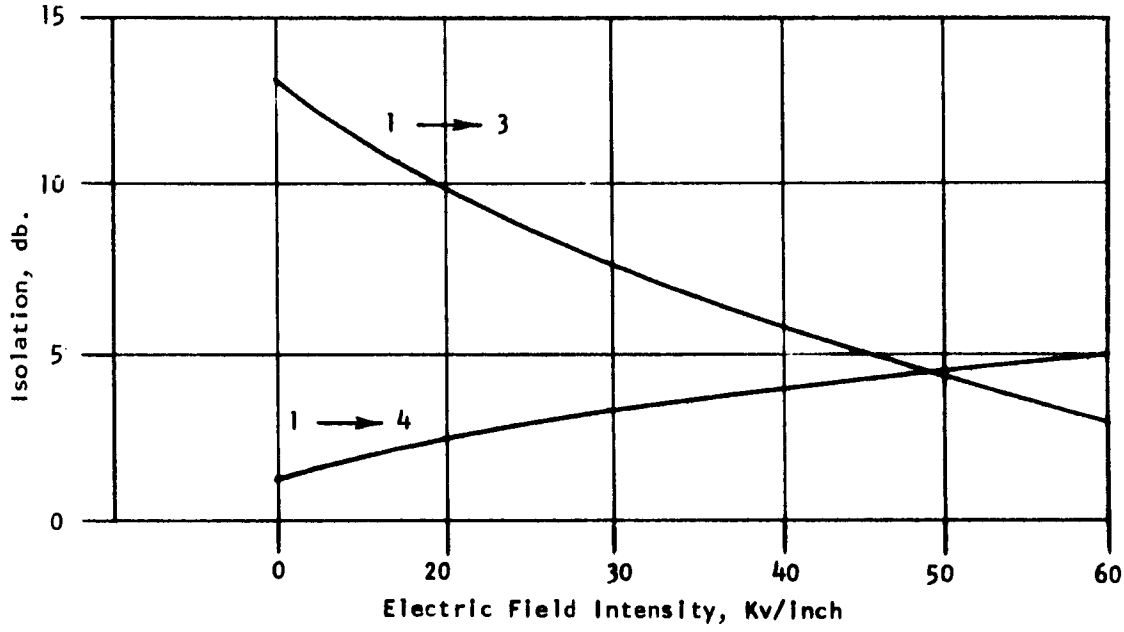

Performance of Tunable
Traveling Wave Filter at 1.195 Gc

Figure 16.

A REFLECTIVE WAVEGUIDE PHASE SHIFTER

It is possible to construct a reflective type phase shifter in a transmission line by changing input impedance of the line due to a change in ferroelectric loading. This particular method of reflective phase shifting is a function of dielectric constant and change in dielectric constant with the resultant change of transmission line input impedance. The theory for the waveguide phase shifter has been done by Bady[9] and will be but briefly described.

Consider a transmission line which is shorted at one end to which some test frequency is applied. Immediately before the short place a quarter wavelength piece of nonlinear dielectric. The rf electric field at the short will be zero while the rf electric field at the air-dielectric interface will be maximum, and the rf electric field will be a minimum again one quarter wavelength in front of the nonlinear dielectric. Therefore, the input impedance of the dielectric is infinite. Now the input impedance of the dielectric will change as a function of the change in dielectric constant. The input impedance normalized to an air filled line is [10]

9. Isidore Bady, "Measurement of the Complex Dielectric Constant of Very High Dielectric Constant Materials At Microwave Frequencies" DA Proj. No. 3-93-00-500, Sig. C. Proj. No. 2005-A, Signal Corp. Laboratories, Fort Monmouth, New Jersey.
10. Ibid.

$$Z_N = \frac{\tan\left(90\sqrt{\frac{\varepsilon_1}{\varepsilon_2}}\right)}{\sqrt{\varepsilon_2}} \tag{9}$$

where ε_1 is the initial dielectric constant

and ε_2 is any other dielectric constant

This equation shows that Z_N will have large changes with small changes in dielectric constant. The electric field null in the transmission line will change as the arc tangent of the normalized impedance. Therefore, small changes in dielectric constant will give large changes in null shift.

A phase shifter using the preceeding concept was built in WR 90 waveguide. Several different types and sizes of ferroelectric were used in the phase shifter but no phase shift could be detected. This approach was abandoned because of negative results. The reason this approach does not work is two-fold. First the theory evidently assumes that there is a perfect match from the air filled line to the dielectric filled line although this is not explicitly stated in the report. This assumption was not realized in the test model. Second, the dielectric constants which were used were several thousand and this abrupt change re-

flected essentially all the rf power.[11]

TRANSMISSION PHASE SHIFTERS

Theory

Since the relative permittivity of a ferroelectric may be changed with an electric field, a transmission type phase shifter using a ferroelectric filled line is a logical device to investigate. The insertion loss for any given phase shift may be found as a function of the loss tangent, tan δ. Assume that the electrical length with no bias is $\varphi + 360$ degrees long and that the length at a given bias is φ degrees. The dielectric loss through the 2π radian phase shifter may be expressed as

$$\alpha_d = \frac{27.2 (\tan\delta) \varepsilon_1 \lambda_{g1} \ell}{\lambda^2} \quad db/360^\circ \qquad (10)$$

where ε_1 is relative dielectric constant at condition 1

λ_{g1} is guide wavelength at condition 1 in centimeters.

λ is free space wavelength in centimeters

ℓ is length of ferroelectric in centimeters

11. A private conversation with David Johnson of Stanford University revealed that he had a similar experience in his work with non-linear dielectrics.

To find x consider

$$\alpha x = (\varphi + 360) \tag{11}$$

$$\beta x = \varphi \tag{12}$$

where $\alpha = \frac{360}{\lambda_{g1}}$ degrees per cm. with 0 bias

$\beta = \frac{360}{\lambda_{g2}}$ degrees per cm. with given bias

Now assuming $\lambda_{g1} = \frac{\lambda}{\sqrt{\varepsilon_1}}$ and $\lambda_{g2} = \frac{\lambda}{\sqrt{\varepsilon_2}}$ where ε_1 is dielectric constant at condition 1, zero bias field and ε_2 is dielectric constant at condition 2, some given bias field and using equations 10, 11, and 12 the loss in the phase shifter is

$$\alpha_d = \frac{27.2\sqrt{\varepsilon_1}}{\sqrt{\varepsilon_1} - \sqrt{\varepsilon_2}} \tan\delta \quad db/360^\circ \tag{13}$$

let $n = \frac{\varepsilon_1}{\varepsilon_2}$ then the loss is

$$\alpha_d = \frac{27.2\sqrt{n}}{\sqrt{n} - 1} \tan\delta \quad db/360^\circ \tag{14}$$

Curves of loss vs tan δ for various values of n are given in Figure 17. It can be seen that as n increases the insertion loss falls for any given tan δ. If a reciprocal

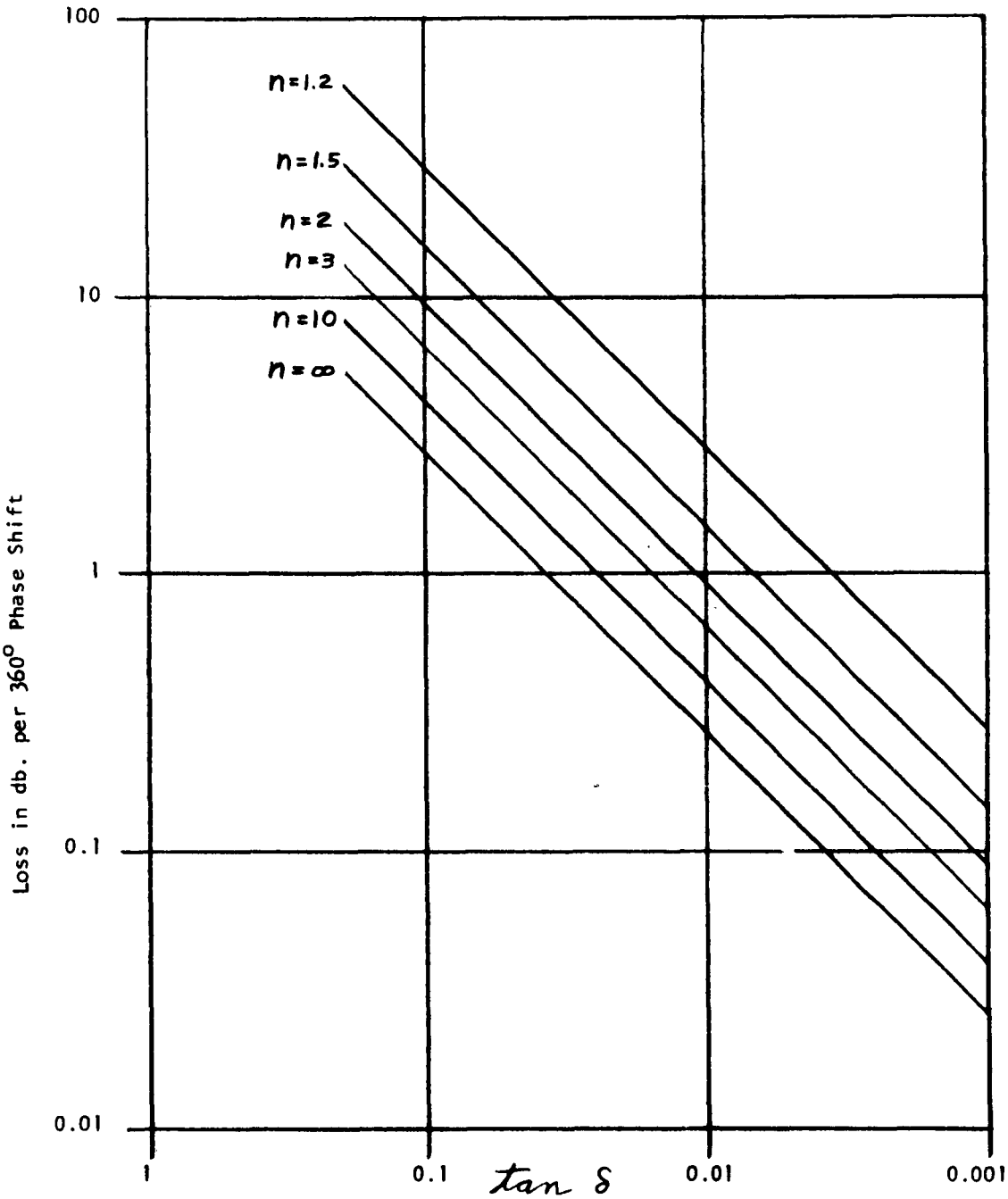

Insertion Loss for 360° Phase Shift Through an Optimum Length of Ferroelectric Material as a function of tan δ . Assume $\lambda_g = \frac{\lambda_0}{\sqrt{\epsilon}}$

Figure 17.

switch were to be made using a 180° phase shifter and two lossless 3 db hybrids the worst tan δ that would be used is 0.015 if $n=3$ and the switch were to have 0.5 db loss. The information of Figure 17 was replotted so that a merit rating could be established for nonlinear dielectrics used as phase shifters. By entering the nonlinearity and the loss tangent in Figure 18 the phase shift per db loss can be compared to some other material. It is evident that considerable variation in nonlinearity and loss tangent may exist, at least in theory, that will give the same phase shift to loss ratio. As an example a material with a nonlinearity of 10 and a loss tangent of 0.2 will have the same merit rating as a material with a nonlinearity of 1.2 and a loss tangent of 0.029.

Waveguide Phase Shifter

A transmission type phase shifter was designed in X-band waveguide. X-band was chosen because it represented a good compromise between ease of construction on the one hand and amount of ferroelectric material which was needed on the other hand. If S-band were used the volume of material would be increased by a factor of 30 over that needed at X-band. In

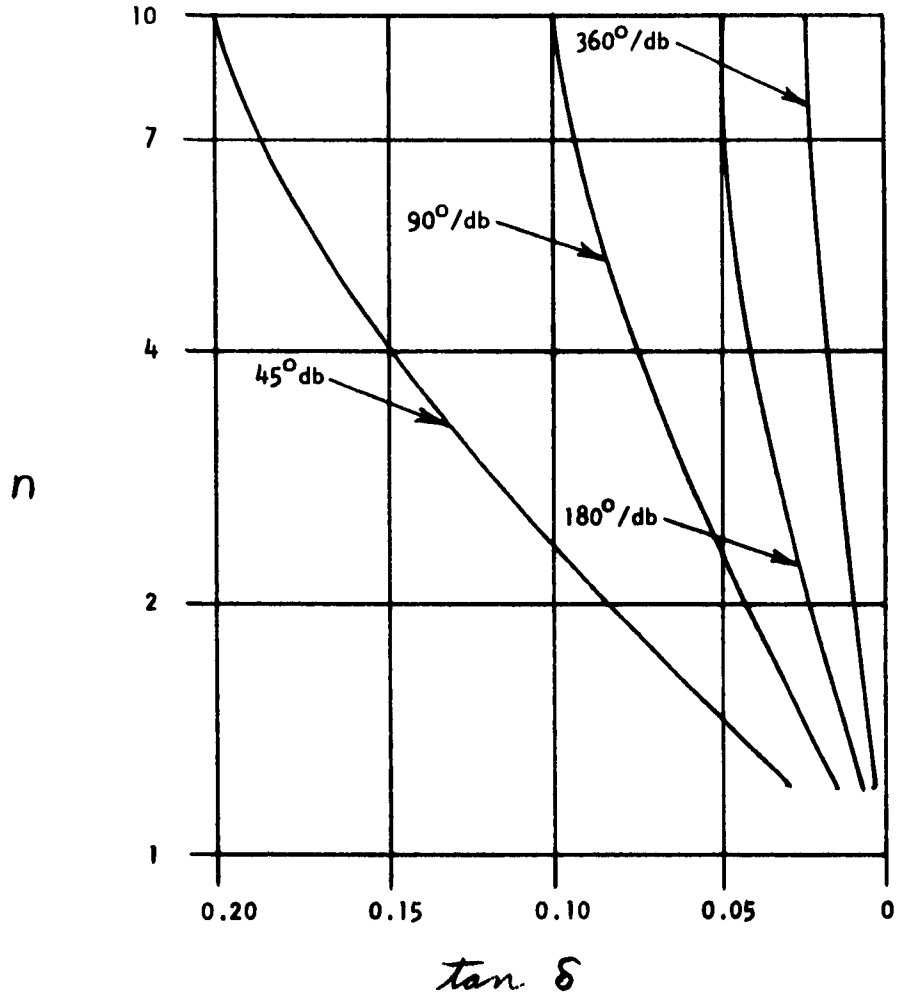

Merit Rating for Ferro-
electric Materials.

Figure 18.

addition single pieces of ferroelectric should be used since glue or air seams perpendicular to the electric bias field would substantially reduce the electric field intensity in the ferroelectric. Glue or air seams parallel to the electric bias field might cause moding problems because of impedance changes. Since ferroelectrics are readily available in sizes of about one inch cube, but not readily available in larger sizes, then a waveguide with a one inch maximum cross sectional dimension is needed. The use of millimeter waves is not desirable as dimensional tolerances would be severe. Therefore X-band was a natural choice.

The electric field intensity was applied by means of a septum inserted in the ferroelectric parallel to the major waveguide walls and midway between them. A voltage was then applied between the waveguide and the septum. One quarter height waveguide was used so that the dc voltage requirement would not be excessive.

The first order of business for a transmission phase shifter was to get the rf energy into the ferroelectric and then out of it. Two methods of matching were tried; the first was with dielectric tapers, and the second was with dielectric step transformers.

Both E pland and H plane tapers were ground. Taper angles of

six degrees per half angle using Aerovox HI Q 91 gave very poor VSWR's and losses. From this data it was inferred that not only must better matching be done but that very small amounts of ferroelectric material must be used. The length of material had to be under one fifth of an inch for reasonable loss, say 3 to 5 db. This length with tapers of six degrees per half angle would make the pieces too thin to fabricate. Ferroelectric material was glued to a piece of Rexolite so that the Rexolite could furnish support for the ferroelectric. The ferroelectric was then ground to size. Even with Rexolite support the ferroelectric broke up whenever thin sections were cut. The same result occured when titanium dioxide was used in place of Rexolite. The cracking of the ferroelectric not only made the application of electric field impossible but seriously effected the match. To get some idea of the magnitude of the mismatch which could be expected several titanium dioxide slabs were cut with tapers which had flats on the leading edge, as shown in Figure 19. it was found that a flat of even 0.005 inches with a half taper angle of 2.2° would have a VSWR of 1.5 or more. Since the dielectric constant of titanium dioxide was several times smaller than the dielectric constant of the ferroelectrics which were used, it is apparent the tapers on ferroelectric materials must come to a feather edge to

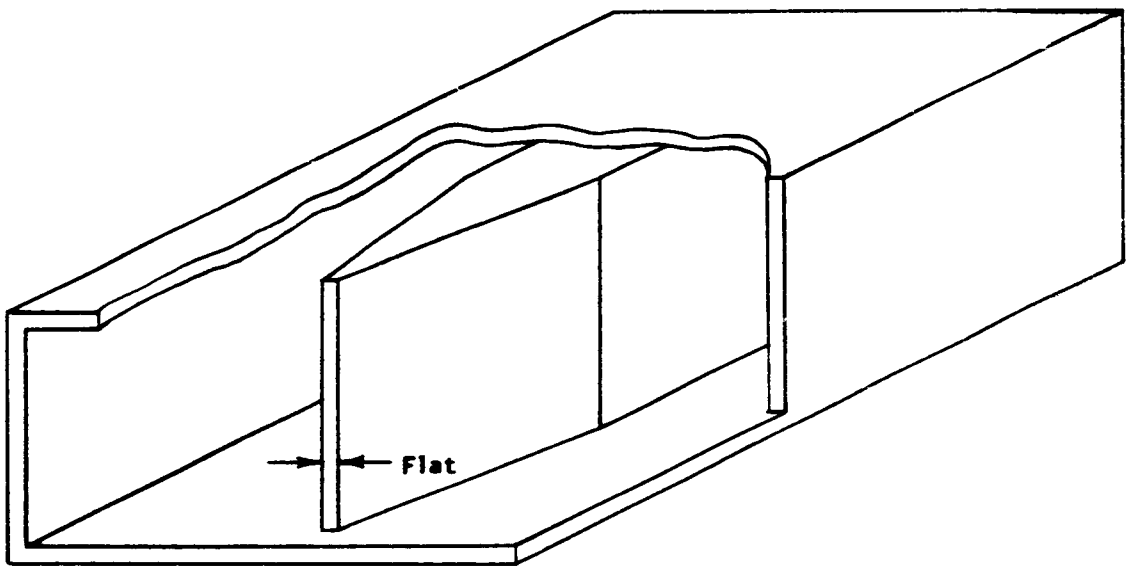

Titanium Dioxide Slab Load Waveguide

FIGURE 19

achieve good matching. Tapers with feather edges were never produced, although they were attempted many times. The tapers always cracked or chipped while being machined. Satisfactory matching with tapers was not accomplished.

Another way to match the ferroelectric to the waveguide is to use a quarter wavelength dielectric matching transformer. This method presupposes that the dielectric constant of the ferroelectric is known. The impedance of the ferroelectric loaded waveguide relative to an air filled waveguide for TE waves may be computed. The impedance of the transforming section must have the square root of this impedance. Knowing the impedance of the transforming section, the proper dielectric constant of the matching section may be computed.

A couple of practical considerations should be clarified at this time. Since the phase shifter depends upon a change in dielectric constant of the ferroelectric, some representative dielectric constant should be used in computing the relative impedance of the ferroelectric filled waveguide. The proper dielectric constant to assume is that which corresponds to the geometric mean of the waveguide impedances for zero and maximum electric field intensity. Using the geometric mean impedance of

the ferroelectric loaded waveguide, a quarter wavelength matching section of waveguide loaded with the proper linear dielectric may be computed. The phase shifter would then be equally mismatched for zero and maximum electric field intensities. The match at other values of electric field intensity would be better.

Any calculation of impedance requires mode purity. Mode purity is theoretically possible as the boundaries between the air and the transformer dielectric and the boundaries between the transformer dielectric and the ferroelectric are perpendicular to the center line of the waveguide. Therefore, no higher order modes should be excited. However, any imperfection in the dielectric or ferroelectric surfaces or inhomogeneity may excite the higher order modes.

The ferroelectric material $Ba_{.73}Sr_{.27}TiO_3$ was chosen to be used with the dielectric step transformer. There were several reasons for the use of this particular material. The dielectric constant was moderately low for titanate materials, the nonlinearity with electric field intensity was good, the loss tangent was modest, [12] and the material was commercially available.

12. D.A. Johnson in a private conversation. Curves are shown in "Microwave Properties of Ceramic Nonlinear Dielectrics", Microwave Lab., Stanford University.

The shortest practical length of ferroelectric material was used. This was determined by the ability to machine thin sections without chipping or cracking the ferroelectric body or peeling the electrode from the ferroelectric. The length which was used was 0.035 inches long.

The dielectric transforming sections were then to be computed. The approach which was used was somewhat different from the "proper" approach which was described previously. It was decided that the phase shifter would be matched with zero electric field applied to the ferroelectric. This means that as the electric field intensity increases the match would get worse. It was felt that this approach would be useful as the value of maximum electric field intensity does not have to be assumed in the design. The bandwidth of the device, however, is restricted.

Assuming the dielectric constant of $Ba_{.73}Sr_{.27}TiO_3$ to be 3200; [13] and an operating frequency of 9 Gc the proper dielectric constant for match would be 39.3. A material from the American Lava Corporation was obtained which has a dielectric constant of about 39. Quarter wavelength sections of this material were cut and affixed to the ferroelectric.

The ferroelectric phase shifter was tested in quarter height x-band waveguide. A triple step transformer on both

13. Ibid

ends transformed the quarter height waveguide to full height waveguide. Pressure windows were placed on the full height end of the step transformers, and both transformers and the phase shift section were filled with sulfur hexafluoride at atmospheric pressure to prevent bias voltage breakdown at the surface of the ferroelectric. The whole assembly was tested as a unit. The step transformers were designed to operate from 8.2 to 10.0 Gc.

The phase shifter has a remarkably poor match at the design frequency of 9.0 Gc. Indeed, the VSWR was about 6 over the entire bandwidth of the metal steps. However, the VSWR of the phase shifter was good from 10.5 to 10.9 Gc being under 1.7. The phase shift was measured over this band of frequencies. It was found that the phase shift generally increased as the electric field intensity was increased until the field intensity reached 12,000 volts per inch. At this point the phase shift increased very slowly as a function of electric field intensity. The dielectric constant of the ferroelectric should be changing rapidly for changes in electric field intensities under these conditions. It is believed that the ferroelectric is mechanically clamped at this point and that further change in physical dimensions is greatly restricted by the waveguide wall or the glue used to mount

the ferroelectric. The correlary investigation at the University of Michigan has definitely established that the change in dielectric constant of ferroelectrics is dependent upon mechanical pressure or the lack of it. Therefore, mechanical clamping could inhibit further change in the dielectric constant of the ferroelectric.

The phase shift, loss and VSWR of the phase shifter as a function of electric field intensity at 10.695 Gc. is shown in Figure 20. The flattening of the phase shift at 12 Kv/inch was explained in the preceeding paragraph, but that explanation should also hold for a flattening of the VSWR. The VSWR, however, continues to change. This is not understood.

Phase shift, loss, and VSWR measurements were taken at several other frequencies in the 10.5 to 10.9 Gc band. The data were very similar to that taken at 10.695 Gc. The phase shift as a function of frequency was not a smooth curve, but varied between 12 and 40 degrees for 12 Kv/inch of maximum electric field intensity.[14]

The phase shift and loss may be easily compared to the theory. By assuming a dielectric constant of 3,300 at zero Kv/inch, 3,000 at 12 Kv/inch and a loss tangent of 0.15 and

14. Similar work has been reported by M. Di Domenico and R.H. Pantell "An X-band Ferroelectric Phase Shifter" IRE Trans. on Microwave Theory and Techniques, May 1962, pp. 179-185.

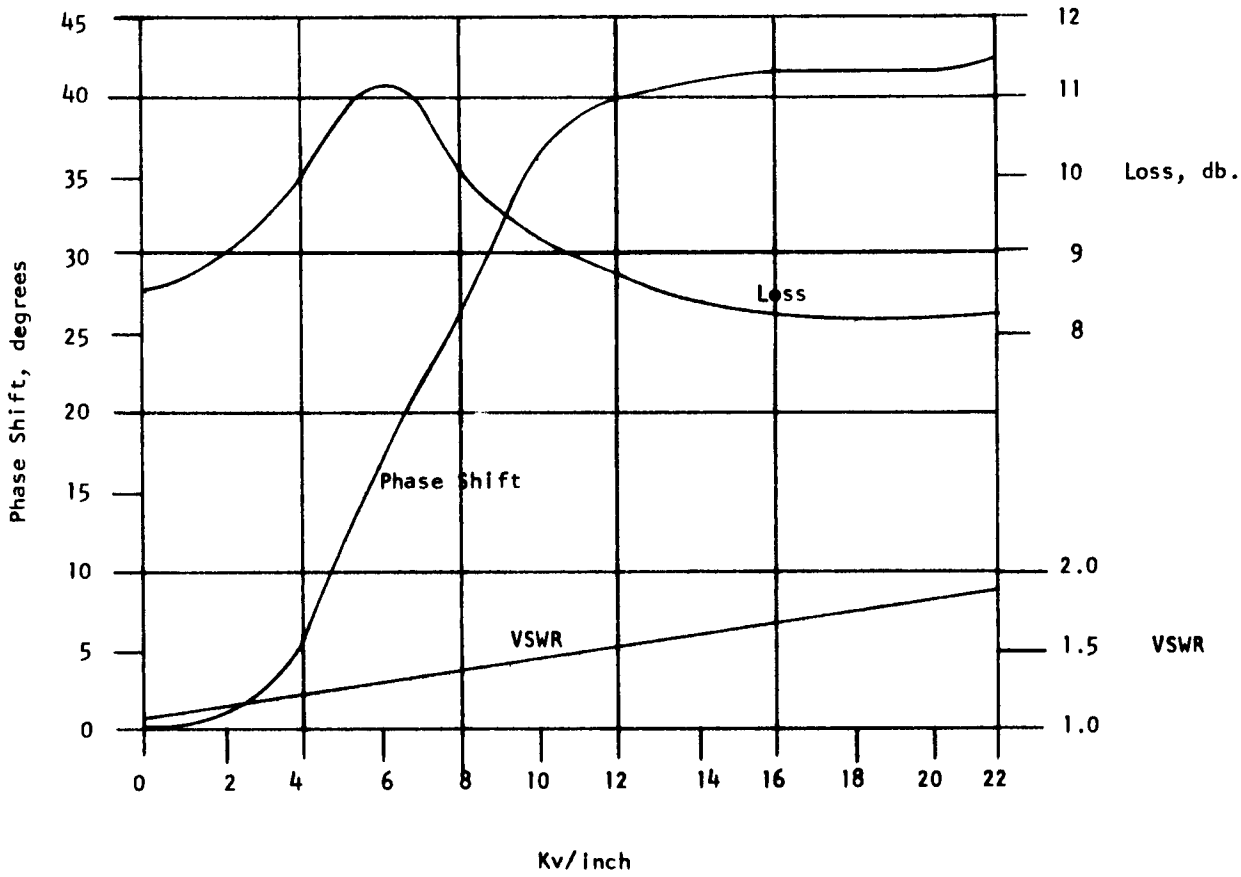

Characteristics of an X-band Transmission Phase Shifter at 10.695 Gc.

Figure 20.

with the use of equation 14 it may be shown that a phase shift of 40° would have a loss of 9.5 db. Since the actual loss varied between 8.7 and 11.1 db it is felt that the correlation is good. The phase shift that could be expected is 32°. A change in the assumption of the dielectric constant at 12 Kv/inch to 2,900 would allow the calculated phase shift to agree with the experimental phase shift.

A Circulator Switch

It is possible to make a fast acting circulator switch by using ferroelectric phase shifters in conjunction with the nonreciprocal ferrite phase shifters. A diagram showing the relative locations of the phase shifter elements is shown in Figure 21. As shown in the figure, the circulator will circulate in the 1,2,3,4, direction. By switching the one reciprocal phase shifter from 90 to 0 degrees relative phase shift and at the same time switching the other phase shifter from 0 to 90 degrees relative phase shift, the direction of circulation will be changed to the 4,3,2,1 direction. The switching speed of the circulator should be very fast as only small amounts of drive power would be required to change the electric field intensities in the

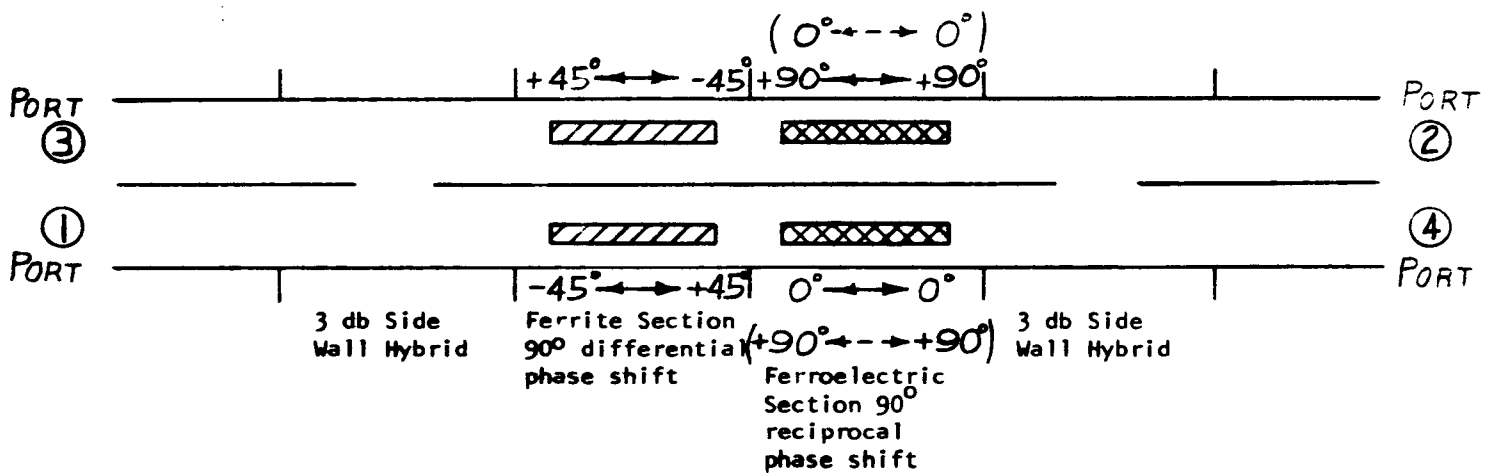

A Circulator Switch Using Ferroelectric Phase Shift Elements

Figure 21.

ferroelectric sections.

Construction of a circulator switch was started even though the insertion loss would be very high and the isolation between certain ports would be low due respectively to the inherent loss of the ferroelectric phase shifter and the changing of the VSWR with bias field. The device was not assembled as the ferroelectric phase shift sections were never developed to the point where they would give 90 degrees of phase shift.

DIELECTRIC MEASUREMENTS

Two different methods of making dielectric measurements were tried. One method was used for materials which have a dielectric constant of greater than fifty. The other method was used on materials with dielectric constants of less than fifty.

The method used to measure the high dielectric constant materials was derived by Johnson [15] and will be briefly described. When a piece of dielectric completely fills a length of waveguide, the surfaces of the dielectric are perpendicular to the center line of the waveguide, and the

15. Op, cit.

waveguide is terminated with a flat load, then the transmission through the dielectric may be measured and used to derive the dielectric constant and the loss tangent of the dielectric. Other data which is needed is the frequency of maximum transmission, the frequency at 1/2 maximum transmission and the length of the dielectric sample. As the frequency is swept the transmission will be maximum whenever the sample is a half wave length long. All measurements must be taken at the points of maximum transmission and 1/2 maximum transmission.

The measurement set up is shown in Figure 22. The dielectric constant and loss tangent may be found from the following equations:

$$\sin \frac{n\pi \Delta f}{f_o} = \frac{a}{15\,n} \tag{15}$$

$$K = \left[\frac{15\,n}{d\,f_{o(n)}}\right]^2 = \left[\frac{15(n+1)}{d\,f_{o(n+1)}}\right]^2 \tag{16}$$

$$\tan \delta = \frac{2}{n\pi} \ln \left[\frac{H+\sqrt{H^2+4G}}{2}\right] \tag{17}$$

where f_o is frequency of maximum

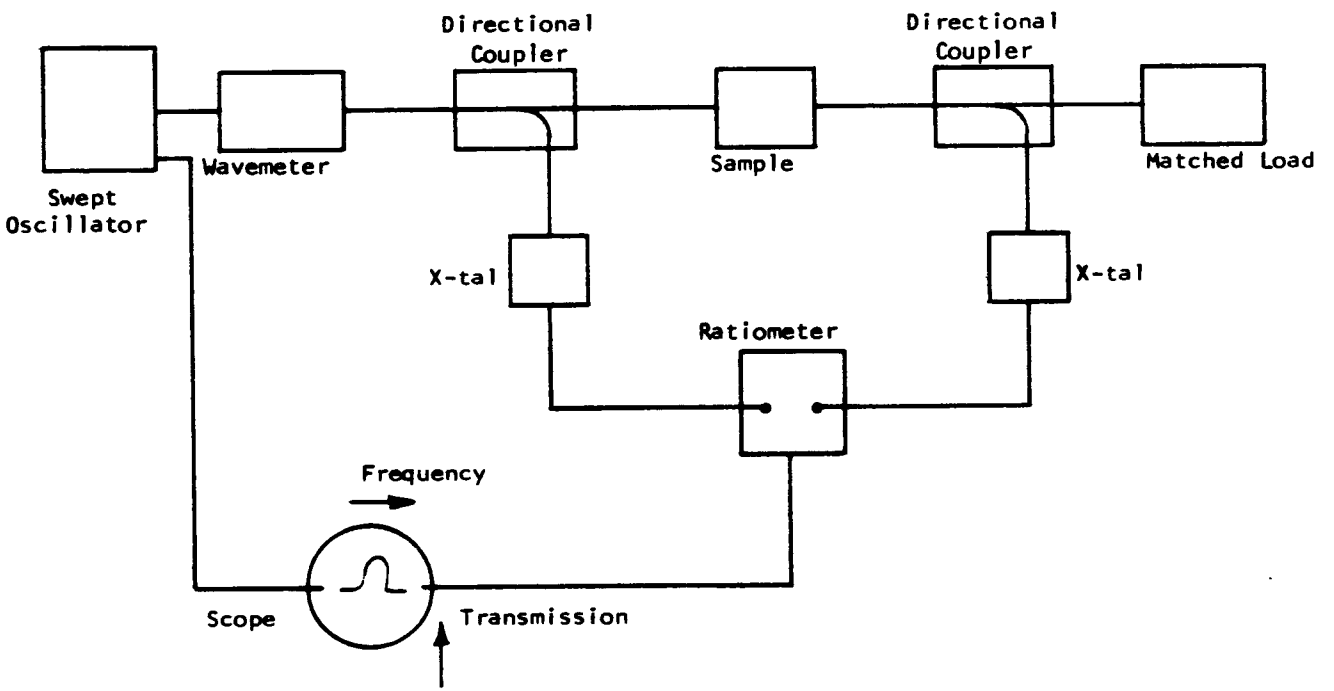

Block Diagram of Equipment for Dielectric
Constant Measurements

Figure 22.

transmission, T_{max} in Gc.

$f_{1/2}$ is frequency at $\frac{1}{2}\ T_{max}$

Δf is $f_{1/2} - f_o$

d is length of dielectric sample in centimeters

n is an integer

$$H = \frac{2a}{15\,n\,(1+F)}$$

$$G = \frac{1-F}{1+F}$$

$$F = \frac{a\,(T_{max})^{1/2}}{15\,n}$$

$$a = \frac{2\left[1-(f_c/f_o)^2\right]^{1/2} df_o}{(T_{max})^{1/2}}$$

f_c is cutoff frequency of waveguide

$T_{max} = \dfrac{\text{Power Out}}{\text{Power Incident}}$ at maximum transmission.

The equations are in the same general form as Johnson's to be consistent, although in this presentation some simplification could be done.

Measurements run on $Ba_{.73}Sr_{.27}TiO_3$ at 75°F

showed $\varepsilon = 3030$ and $\tan\delta = 0.16$ with no applied field. This compares favorably with the $\varepsilon = 3,300$ and $\tan\delta = 0.16$ that Johnson obtained. It should be mentioned that great difficulty was experienced in getting this data. Many times no distinct transmission maxima was observed. It was felt that the dielectric which was measured had to fit the waveguide very closely. If not, then the rf leakage over or under the dielectric could mask the effect of the energy being transmitted through the dielectric.

Dielectric measurements were also made on Aerovox HiQ 88 and HiQ 91 but the data which was gathered gave no useful information. It is believed that these samples were not properly fitted to the waveguide and that the rf leakage overshadowed the transmitted energy.

The dielectric constant of ceramic TiO_2 was measured and found to be 81.7 to 82.7 The loss tangent was 0.0013. This compares favorably with Johnson's values of $\varepsilon = 87$ and $\tan\delta = 0.0015$.

A dielectric body N750T96 from American Lava was measured. This material was used to match the barium-stronium-titanate ferroelectric in the X-band phase shifter. The N750T96 had a dielectric constant of 39.4 measured at

low frequencies. Measurements at this laboratory showed that the dielectric constant was 40.8 with a loss tangent of 0.0012. It should be noted that the dielectric constant may have some error as the assumptions made in analysis, i.e. $\varepsilon \geqslant 100$ and $\omega^2 \mu_0 \varepsilon \gg \left(\frac{\pi}{a}\right)^2$ are no longer strictly true.

Measurements of low dielectric constant materials were made by using the method described by von Hippel[16]. The first batch of polycrystalline colemanite from Dr. Diamond at the University of Michigan had a dielectric constant of $\varepsilon_r^* = 8.06 - j1.12$ at 9.375 Gc and room temperature. The data seemed to be reasonably accurate as quarter wavelength Rexolite transformers could be used to match the colemanite to reduce height waveguide. The Rexolite was also measured by this method with the following results, $\varepsilon_r^* = 2.46 - j0.009$. The real part of the dielectric constant is very close to the published figures, but the imaginary part is high.

COLEMANITE

A subcontract was let with the University of Michigan

16. A.R. von Hippel, Dielectrics and Waves, John Wiley & Sons, Inc, 1954

to study ferroelectric materials which might prove useful to the device development of the prime contract. The work undertaken by the group at the University of Michigan is reported in a separate section of this report. It is sufficient to say that the group searched the literature and was able to find about one hundred compounds which were reported to be ferroelectric. A list of these materials is given in Table 2. Of the materials surveyed, the mineral, colemanite, appeared to be of prime interest because of its relatively low dielectric constant and large change in dielectric constant with voltage and temperature. The relatively low dielectric constant means easier matching while the large change in dielectric constant means more phase shift per unit length. For more information on Colemanite and its preparation the reader is referred to the section composed by Dr. Diamond, et al.

Several sources of colemanite were found by this laboratory so that work could be done independently of the University of Michigan. Colemanite crystals were obtained from Minerals Unlimited, Berkeley, California. This source was chosen because of its proximity to this Corporation. Single crystals could then be hand picked instead of getting

FERROELECTRIC MATERIALS

ALUMS

$(NH_3CH_3)Al(SO_4)_2 \cdot 12H_2O$

$CN_3H_6Al(SO_4)_2 \cdot 6H_2O$

$NH_4Al(SO_4)_2 \cdot 12H_2O$

$CrK(SO_4)_2 \cdot 12H_2O$

$C(NH_2)_3Cr(SO_4)_2 \cdot 6H_2O$

$Fe(NH_4)(SO_4)_2 \cdot 12H_2O$

$C(NH_2)_3Ga(SO_4)_2 \cdot 6H_2O$

$C(NH_2)_3V(SO_4)_2 \cdot 6H_2O$

$(NH_2CONH_3)Cr(SO_4)_2 \cdot 12H_2O$

ARSENATES

CsH_2AsO_4

CsD_2AsO_4

KH_2AsO_4

KD_2AsO_4

$NH_4H_2AsO_4$

$ND_4D_2AsO_4$

RbH_2AsO_4

RbD_2AsO_4

OXIDES

As_2O_5

SeO_2

TlO_2

WO_3

MoO_3

NIOBATES

$Al(NbO_3)_3$

$Ba(NbO_3)_2$

$Cd_2Nb_2O_7$

$KNbO_3$

$LiNbO_3$

$Pb(NbO_3)_2$

$PbBi_2(Nb_2O_9)$

$NaNbO_3$

Pb_2FeNbO_6

$Pb_3MgNb_2O_9$

$Pb_3NiNb_2O_9$

Pb_2ScNbO_6

$Mn(NbO_3)_2$

$Na_{1-x}Zn_xNbO_3$

$NaTaNbO_3$

$NaLaNbO_3$

$Ba(ZrNbO_3)_2$?

$BaYNbO_3$

$NaVNbO_3$

NITRATES

$CsNO_3$

KNO_3

$NaNO_2$?

$RbNO_3$

PHOSPHATES

CsH_2PO_4

KH_2PO_4

KD_2PO_4

$NH_4H_2PO_4$

$ND_4D_2PO_4$

RbH_2PO_4

RbD_2PO_4

TANTALATES

$LiTaO_3$

$KTaO_3$

$Mn(TaO_3)_2$

$NaTaO_3$

Pb_2FeTaO_6

Pb_2ScTaO_6

$RbTaO_3$

$SrTa_2O_7$

TABLE I

SELENATES

$C(NH_2)_3Al(SeO_4)_2 \cdot 6H_2O$

$C(NH_2)_3Cr(SeO_4)_2 \cdot 6H_2O$

$C(NH_2)_3Ga(SeO_4)_2 \cdot 6H_2O$

$LiH_3(SeO_3)_2$

$NaH_3(SeO_3)_2$

SULFATES

$Li_2SO_4 \cdot H_2O$

$LiN_2H_5SO_4$

$(NH_4)_2SO_4$

NH_4HSO_4

$(NH_4)_2CD_2(SO_4)_3$

TARTRATES

$KHC_4H_4O_6 \cdot H_2O$

$LiNH_4(C_4H_4O_6) \cdot H_2O$

$LiTaC_4H_4O_6 \cdot H_2O$

$LiTlC_4H_4O_6 \cdot H_2O$

$NaNH_4C_4H_4O_6 \cdot H_2O$

$NaKC_4H_4O_6 \cdot 4H_2O$

$NaK(C_4H_2D_2O_6) \cdot 4H_2O$

$C_6H_5Ch(CH_3)NH_2C_4H_4O_6$

$NH_4HC_4H_4O_6 \cdot H_2O$

TITANATES

$BaTiO_3$

$MgTiO_3$

$PbTiO_3$

MISCELLANEOUS

$CaB_3O_4(OH_3) \cdot H_2O$

AgCN

$Ca_2Sr(CH_3CH_2COO)_6$

$C_6H_5NH_2 \cdot HBr$

Cu_2S

$NH_2CH_2COOH \cdot AgNO_3$

$(NH_2CH_2COOH)_2 \cdot HNO_3$

$(NH_2CH_2COOH)_3 \cdot H_2(SO_4)$

$(NH_2CH_2COOH)_2 \cdot MnCl \cdot 2H_2O$

$(NH_2CH_2COOH)_3 \cdot H_2BeF_4$

NH_2CSNH_2

$(NH_4)_2BeF_4$

$Mg_3B_7O_{13}Cl$

$Pb_3Fe_2WO_9$

$PbZrO_3$

FLUOBERYLLATE

PENTAERYTHRITOL

$NaVO_3$

whatever happened to be shipped to us. Most of the crystals which were obtained ranged in size from that of buckshot to 1/8 x 1/8 x 1/2 inches. This size was difficult to work with in the single crystal form. However, these pieces were to be ground up and mixed with binder to make a polycrystalline material. One huge piece, larger than a man's fist, was obtained. This piece was composed of many small crystals and several large ones. The largest crystal was several cubic inches.

Since colemanite is found in nature, it may be expected to have widely varying characteristics depending upon the type and amount of impurities. It is therefore very important to know the location where the samples were found. Of course, the ideal approach would be to use synthesized colemanite. Unfortunately, the synsthesis of colemanite has not been achieved under this contract, although it has been attempted on several occasions.

Pieces were cut from single crystals to check the temperature and voltage sensitivity of colemanite. Small chips of colemanite were painted on the ends with silver paint to form electrodes. These electroded chips were placed in a shorted coaxial line just before the short.

While the electroded surfaces were relatively flat and free from holes, cracks and chips, the other surfaces were not due to preferential breakage along the cleavage plane of the crystal. The edges, particularly, were chipped and cracked. Nevertheless, small chips of colemanite were tested at 1 Gc. No phase shift was measured as the temperature was varied between -28° C and +18.5° C while the electric field intensity was varied between 0 and 16 Kv/inch. Since the Curie temperature of colemanite is -7°C any large nonlinearity which was present should have been detected. There seems to be very little nonlinear activity in this colemanite crystal. Even if the initial impedance of the colemanite were grossly improper, relatively large phase shifts should be evident due to the change in dielectric constant.

A large crystal from the same batch was checked at X-band for phase shift as a function of temperature. As the temperature was varied from +20° to -30°C the phase shift changed continuously reaching a maximum value of 12.2 degrees at -30°C. This data shows that there is little nonlinearity and also that the Curie temperature was not in the range of the test temperatures.

While considerable time was spent on fabricating and measuring single crystal pieces of colemanite, single crystals are not of particular interest in microwave devices. In the region of dielectric nonlinearity single crystal colemanite is very sensitive to both voltage and temperature; and there is nonlinearity only in one direction. If a polycrystalline material were available then the voltage and temperature senitivities would be less; and the nonlinearity would be the same in all directions. This is a far more desirable material to use. The single crystal colemanite was tested primarily to determine whether nonlinearity existed. If it did, then the material would be used to make a "polycrystalline" substance. Since colemanite decomposes at +325°C, it cannot be fired into a ceramic as can some ferroelectrics. Powdered colemanite must be mixed with a binder to form a "polycrystalline" mass. The binder will tend to mask the nonlinear effects unless very little binder or a high dielectric constant binder is used.

Several samples of polycrystalline colemanite have been received from Dr. Diamond. One sample was checked for nonlinearity in the coaxial fixture as a function of both temperature and voltage. At a test frequency of 4 Gc

no voltage or temperature dependance was found, but at 1 Gc temperature sensitivity was noticed. The Curie temperature appeared to be about $0^{o}C$. No voltage sensitivity was found for fields up to 27 Kv/inch in the temperature range of -20° to $+17^{o}C$. This peculiar behaviour may be explained if the binder separates the individual crystals of colemanite. The bias voltage would then appear across the binder and not across the colemanite. Since none of the other samples of polycrystalline colemanite exhibited nonlinearity as a function of electric field and some of them exhibited nonlinearity as a function of temperature this indicates that too much binder may have been used in preparing the samples.

The first sample of polycrystalline colemanite from the University of Michigan was matched in reduced height X-band waveguide with quarter wave length dielectric transformers made from Rexolite. The VSWR of the matched section was 1.20 at the band center. The loss through the section was 2.4 db which is somewhat higher than the calculated loss of 1.7 db. Matching was attempted in anticipation of colemanite samples that would be nonlinear

with electric field. While the matching procedure was successful the colemanite development did not progress to the point where successful device applications were possible.

FABRICATION OF FERROELECTRIC PIECES

The major portion of the ferroelectric investigation was done with commercially available polycrystalline ceramics. While five different materials were used, (Aerovox BKPIA, BIK50, A-40 and HI Q 91 and Gulton $Ba_{.73}Sr_{.27}TiO_3$), they all had similar mechanical properties. They were moderately hard, brittle, and non magnetic. By way of comparison, the ferroelectric ceramics were softer than ferrites and somewhat more brittle. All fabricating was done by grinding with machines which were normally used to grind ferrites and garnets.

The most difficult problem was that of holding the ferroelectrics while they were ground. Since the ferroelectrics are non-magnetic, the magnetic chucks on the grinders could not be used directly. This was a constant problem which was not solved. Of course, the problem became more difficult as the pieces became smaller and smaller. The ferroelectrics were glued, or wedged, or clamped

during the grinding process.

It was quickly found that vibration of the grinding wheel would limit the sharpness of the edge of the ceramics. Vibrations could be caused by improper dressing of the grinding wheel, worn wheel bearings, improper clearing of chips, or improper feed speed. Many of these defects could be tolerated while grinding ferrites because of their superior mechanical strength.

Cleanliness was also very important in grinding as any small chips or dust under the ceramic would cause it to break. Here again, the mechanical superiority of ferrites was noticed. Thin sections of ferrites will elastically deform before fracture occurs but the ferroelectrics did not seem to deform at all unless they fractured.

Machining of small cross sectional pieces for use in the terminated coaxial phase shifter posed additional problems. One of these was to make the pieces in the shape of a rectangular parallelpiped. The pieces were difficult to hold because of their size. The other problem concerned the electrodes. Since the metal electrode was soft and malleable, the electrode would tend to deform rather than to be cut. This deformation put an added strain on the

electrode to ferroelectric bond which caused many electrodes to peel off. The smaller the pieces which were machined the more pronounced the problem was. Due to the above mentioned problems pieces which were 0.020" x 0.020" x 0.020" were the smallest that could be produced without a high percentage of breakage or rejects.

ELECTRODES

The bond of the electrode to the ferroelectric material is extermely important. If there is a small void between the metal and the ferroelectric the voltage drop will be large across the void and very small across the ferroelectric. This may be expressed as a first approximation by

$$\frac{V_v}{V_T} = \frac{x \varepsilon_F}{x \varepsilon_F + (d - x) \varepsilon_v} \tag{18}$$

where V_v is voltage across the void

V_T is voltage between electrodes

x is thickness of void

d is distance between electrodes

ε_v is dielectric constant of void

ε_F is dielectric constant of ferroelectric

Then, if $x \ll d$ and $\varepsilon_f \gg \varepsilon_v$, which is true for most titanate ferroelectrics, then much of the voltage will appear across the void. Therefore the effective area of the ferroelectric is reduced in direct proportion to the area of the voids because the ferroelectric beneath the voids is almost useless for phase shifting, but it will contribute directly to the rf loss.

Three methods of putting electrodes on ferroelectric materials were tried. One was simply painting the ferroelectric with silver paint and allowing the paint to dry. This method was an effective, temporary solution. The mechanical bond to the ferroelectric was poor. In addition, the silver could be rubbed off. Some voids were undoubtedly caused by bubbles in the paint although this could not be detected by the unaided eye.

A second method was to paint the ferroelectric with silver paint and fire the electrode. Du Pont silver paste, #4731, which was thinned with toluene was painted on the surface and allowed to air dry, then painted again and fired as recommeneded by Du Pont. When this was done properly, it produced a very servicable electrode. The mechanical bound was good and the electrode was dense and hard. The

electrodes could be readily soldered.

DuPont silver paint, #5815, was also used. This is a paint which is fired at very low temperatures such as +270°C. This electrode was moderately good but it could be scraped off. The electrode could not be soldered readily as it would tend to burn off. The electrode was useful for temporary electrodes and for materials which could not take high temperatures.

The third method of applying electrodes that was tried, was the electroless nickel[17] method. This is a spontaneous metal precipitation from a chemical solution in which the ferroelectric is immersed. The results from this method were very poor. It was felt that the proper chemical balance of the solution was not achieved, therefore the precipitation was almost nonexistant.[18]

The surfaces on which electrodes are to be deposited should be rough and clean to insure proper adhesion of the electrode. Normal grinding practice will give a surface

17. Metal Finishing Guidebook, 1959, edition, p. 433

18. In a private communication with David Johnson, he said that he also tried this method. He got good results by very carefully titrating all his solutions.

with suitable roughness, even though it is macroscopically flat. The ferroelectric may be cleaned by brushing the surfaces in an acetone bath.

CONSLUSIONS AND RECOMMENDATIONS

The theory describing the reactively terminated transmission line has been confirmed by experimental data.

To match rf energy into and out of a titanate ferroelectric and to avoid mechanical clamping in direct transmission phase shifters are difficult problems to overcome. Very careful machining is needed to get a good match. Some type of flexible or expandable guilding structure may be needed so the mechanical clamping is not a problem.

Phase shift to loss ratios of 100 to 1 were measured. It is felt that this ratio might be improved by a factor of 2 with presently available ceramic ferroelectrics. Further improvement would necessitate developing materials with lower loss tangents. Commercially available ferroelectric materials will give phase shift to loss ratios about one order of magnetude lower than will ferrite materials.

"Polycrystalline" colemanite samples were evaluated at microwave frequencies but no voltage sensitivity was detected. It is felt that too much binder was used in the sample preparation and almost all of the voltage appeared across the binder while very little voltage appeared across the colemanite.

Except for a specific device application, similar to presently developed units, all future ferroelectric work should be devoted to developing materials with low loss tangents, low dielectric constants, (to facilitate matching), and high non-linearity. Please refer to the section by Dr. Diamond, et.al., for specific recommendations.

THE UNIVERSITY OF MICHIGAN
COLLEGE OF ENGINEERING
Department of Electrical Engineering

Final Report

DIELECTRIC AND OPTICAL PROPERTIES OF TITANATE AND COLEMANITE FERROELECTRICS

V. Chang
H. Diamond
V. Marinovic
D. McNeal

Project Supervisor: H. Diamond

ORA Project 03757

under contract with:

CASWELL ELECTRONICS CORPORATION
SAN JOSE, CALIFORNIA

administered through:

OFFICE OF RESEARCH ADMINISTRATION ANN ARBOR

INTRODUCTION

The following report covers the period from June 1960, to June, 1961, for research on ferroelectric materials done at The University of Michigan under contract with The Caswell Electronics Corporation of San Jose, California.

The purpose of this program has been to work toward improved ferroelectric materials for ultimate application particularly in the microwave frequency range. One property of the ferroelectric of interest to the applications engineer is the change in dielectric constant of the material under the influence of electric field. The approach of The University of Michigan group toward optimizing this property for applications has been two-fold:

1. To identify and understand the physical mechanisms responsible for the change in permittivity with electric field.

2. With this knowledge, to specify the theoretical limits of the change in dielectric behavior with electric field and temperature; and also to investigate ferroelectric systems which would have the best chance for successful application.

In connection with the first point above, the writers feel that both an acceptable phenomenological theory for the nonlinear behavior has been worked out, and excellent experimental evidence to corroborate this theory has now been obtained.

It must be noted that we have not directly dealt with the problem of dielectric losses, which of course is of extreme importance for applications at high frequencies. However, a suitable theory of dielectric losses (even for linear dielectrics) is not available except for a few isolated special cases. For this reason we feel that a study of this problem would have to be set up on the basis of a separate (and probably fairly extensive) research effort.

In connection with the second purpose stated above, we have noted that it would be pointless to develop a material of the perovskite class (such as barium-strontium titanate) which would exhibit large changes in small-signal permittivity and at the same time not be temperature-sensitive to the extreme. That is, the mechanism for change in permittivity appears to be a thermally determined property, not only for the perovskites but for other ferroelectric systems as well. We find that once this basic mechanism is understood, there is little necessity to base the microwave applications on perovskite-like ferroelectrics, whose uncomfortably high dielectric constant must be dealt with in the microwave range. For this reason we have focused our attention on the mineral colemanite, a low-permittivity ferroelectric.

In the following sections we first consider experimental aspects of non-linear behavior in titanate-like ferroelectrics. This is followed by a description of our research on colemanite.

INVESTIGATION OF CHANGE IN SMALL-SIGNAL PERMITTIVITY WITH BIASING FIELDS FOR TITANATE-LIKE FERROELECTRICS

INTRODUCTION

In a recent publication[1] Diamond has demonstrated that the change in permittivity with electric field in polycrystalline, mixed titanate ferroelectrics appears to be due to an induced ferroelectric state in grains which are paraelectric at zero bias rather than due to domain orientation. The reader is referred to the paper for the details (which were worked out prior to the present contract), but the main idea will be indicated here since this theory forms the basis for our calculations on colemanite.

The resultant permittivity $\overline{\varepsilon(T,E)}$ of an ensemble of ceramic grains is taken as a statistical average of the permittivities $\varepsilon(T,T_c,E)$ of the individual grains:

1. H. Diamond, J. Appl. Phys., 32, 5 (May, 1961).

$$\overline{\varepsilon(T,E)} = \frac{\int_0^\infty \varepsilon(T,T_c E)\, e^{-\frac{(T_r-T_c)^2}{\alpha^2}}\, dT_c}{\int_0^\infty e^{-\frac{(T_r-T_c)^2}{\alpha^2}}\, dT_c} \qquad (1)$$

Where T_c is the Curie temperature of the individual grain, T_r is the Curie temperature of a macroscopic single crystal, and α is the variance of the statistical distribution. T and E are temperature and electric field, respectively. The function $\varepsilon(T,T_c,E)$ is worked out from the thermodynamic theory of the single-crystal ferroelectric. Hence most of the information and assumptions in the theory are carried by the latter function. The resultant $\overline{\varepsilon(T,E)}$ agrees very well with dielectric data obtained about both commercial samples and our laboratory compositions. However, direct observation of the induced ferroelectric state in originally paraelectric grains has, until the present, been lacking.

The object of the present investigation has been to make an optical study of thin sections of titanate materials and to observe directly the mechanism of the permittivity change

in the ceramic grains as a function of applied electric fields and temperatures.

A number of investigators[2] have gathered much illuminating information on the structure of ferroelectric materials by employing the metalographic techniques of polishing and etching. A drawback of this method is its static character. Any changes in the properties of the material due to enviroment (mainly those due to temperature and electric field changes in our case) can be readily detected only by renewed polishing and etching of the sample under another set of conditions. To obtain information over a whole range of temperatures and fields would be almost prohibitively time-consuming.

A less laborious method consists of preparing very thin sections of the polycrystalline material which are permeable to transmitted light. A sample of this type can be easily subjected to varying temperatures and electric fields while under microscopic observation. Since the ferroelectric to paraelectric transition goes hand in hand with the anisotropic (tetragonal) to isotropic (cubic) transition, the amount of

2. W. R. Cook, J. Am. Ceram. Soc., 39, 17 (1956); V. J. Tennery and F. R. Anderson, J. Appl. Phys., 29, 755 (1958); R. C. DeVries and J. E. Burke, J. Am. Ceram. Soc. 40 (1957).

light transmitted under crossed polars by a grain becomes an indication of the degree of its ferroelectricity, ranging from paraelectric for total extinction to extensively ferroelectric for maximum birefringence and brightness. In addition, domain striations tend to disappear as the samples are heated through their Curie temperatures. Thus this essentially mineralogical technique becomes a sensitive tool for detecting any structural changes in the titanate grains. Results of the investigation conducted along these lines show that, in the main, the method employed is satisfactory.

EXPERIMENTAL PROCEDURE

Sample Preparation

Seven compositions of mixed barium-strontium-titanate were chosen for the present investigation (Table 1). Except for the commercially obtained sample BKPIA, the ceramics were all prepared in our laboratories. They were chosen with Curie temperatures at or above room temperature so that the tetragonal to cubic transition could be controlled simply by a heating stage. As a sample was heated and cooled, capacitance and light-intensity data were taken. In addition, the changes of the electric and optical properties due to biasing fields are recorded.

Initially, uniformly thin sections, 30 μ in thickness, were ground and polished from ceramic slabs. It was found, however, that the capacitance of such a section as measured across its width was of the order of less than 1 $\mu\mu f$ and could be measured only with difficulty. This problem was solved by grinding samples in a wedge shape which had a higher over-all capacitance (10 to 30 $\mu\mu f$), yet were thin enough at one end to allow transmitted light observations (Fig. 1).

The samples are highly polished on both faces and mounted to a microscope slide with Eastman 910 Adhesive, a strong, almost invisible cement because of its similar index of refraction to that of glass. Aluminum foil strips and silver paint leading from opposite sides of the sample provide electrical contact. The slide is then placed on a heating stage and observed through a Leitz Panphot Microscope.

The Heating Stage

The heating stage (Fig 2.) consists of a strip of nichrome wound mica attached to a disk of asbestos. A slit in the center of the disk over which the sample is placed allows free passage of light through the specimen while it is under observation. An iron-constantan thermocouple directly below the thick end of the wedge provides accurate temperature measurement. The heating rate is manually adjusted during the course of an experiment

TABLE 1

Sample	Composition, mole %	Approximate Peak,	Curie Temp., °C
BKPIA	Aerovox Corp. Formula	5500	22
HS14F2	85% $BaTiO_3$ 14% $SrTiO_3$ 1% Fe_2O_3	5000	40
HS15	85% $BaTiO_3$ 15% $SrTiO_3$	4600	82
HS25	75% $BaTiO_3$ 25% $SrTiO_3$	4400	50
HS25Cd2	73.5% $BaTiO_3$ 24.5% $SrTiO_3$ 2.0% CdO	5500	50
HS25Nb2	74.25% $BaTiO_3$ 24.75% $SrTiO_3$ 1.00% Nb_2O_5	6000	20
HS25V	75.0% $BaTiO_3$ 24.9% $SrTiO_3$ .1% $(VO_2)(NO_3)_2$	7500	58

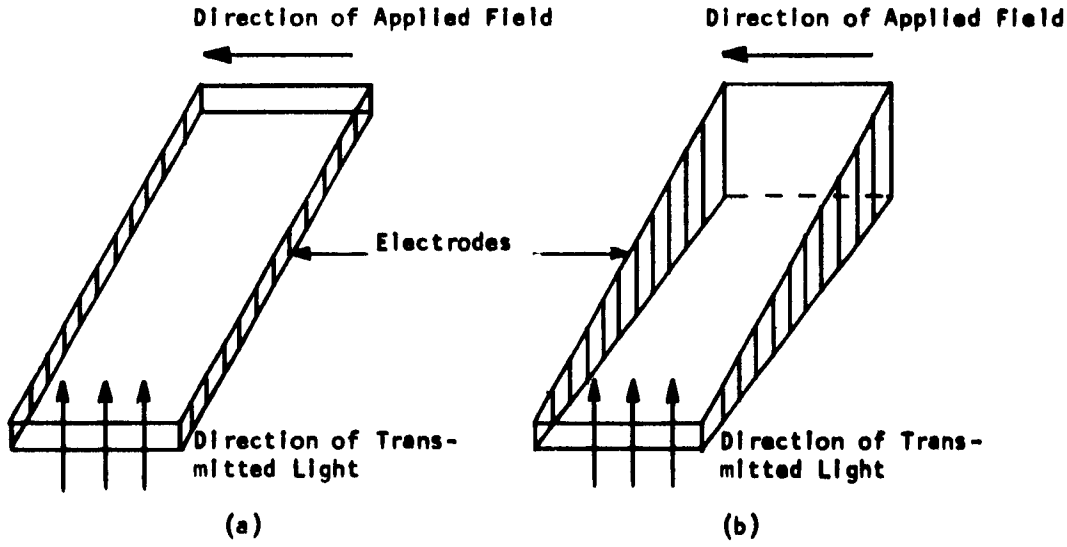

Figure 1. (a) Uniform thin section; (b) wedge.

by a variac which is connected to a 110-volt to 6-volt step-down transformer which drives the nichrome resistance wire. The temperature is obtained from potentiometer readings of the thermocouple.

Capacitance Measurements

Capacitance measurements were taken at 1600 on a Bontoon Radio Corporation Q-meter. A 1300-volt battery box supplied the bias applied to the ferroelectric wedge. Figure 3 is schematic of the circuit. The large standard resistor and the capacitor are introduced as protective measures: the resistor to isolate the battery box from the sample, and the capacitor to isolate the Q-meter from the battery box. If one knows the effective capacitance as measured across the Q-meter terminals and the capacitance of the sample holder (microscope slide with foil leads, heating stage posts and coax cable leading to Q-meter), the actual sample capacitance can be easily calculated (see Fig. 3).

$$Z_{CD} = \frac{-j}{\omega C_x} = Z_{AB} \frac{-j}{\omega C_{ST}}$$

Let

$$C_{Holder} = C_2$$

$$C_{Sample} = C_3$$

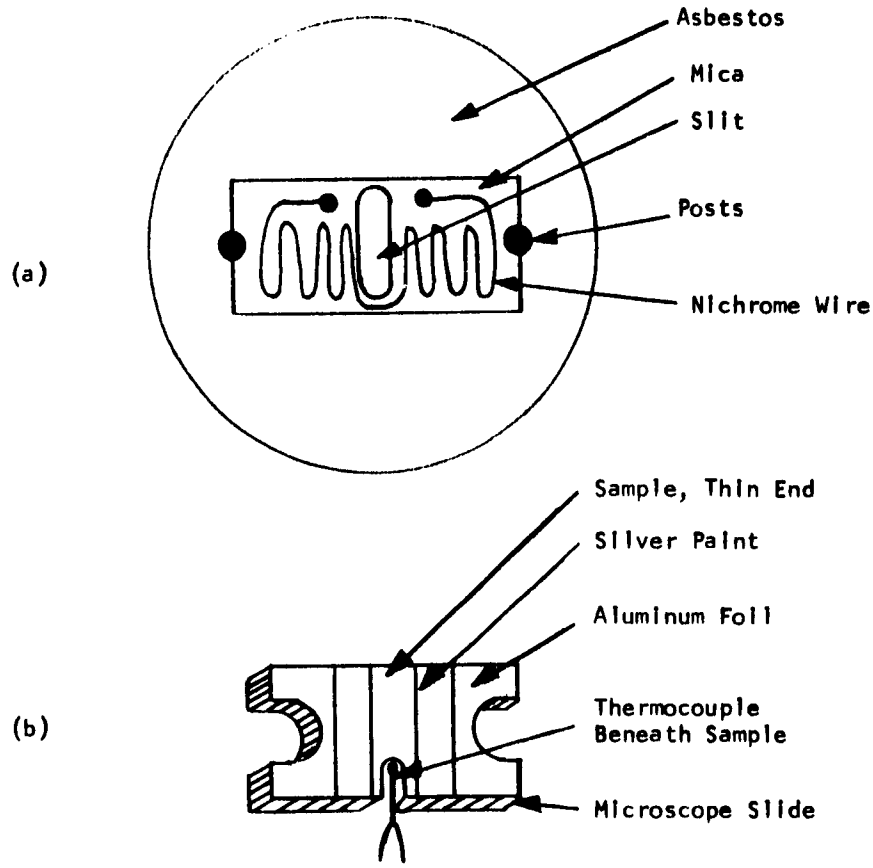

Figure 2. (a) Heating stage; (b) sample on microscope slide.

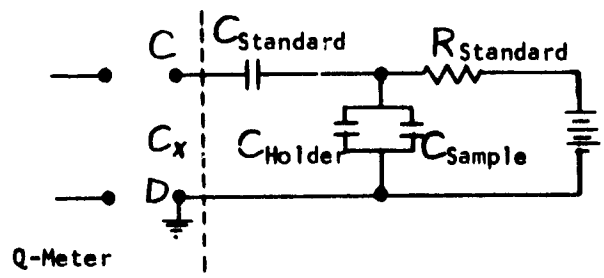

Figure 3. Circuit for capacitance measurements.

$$Z_{AB} = \frac{-j}{\omega(C_2 + C_3)}$$

$$\frac{-j}{\omega C_x} = \frac{-j}{\omega(C_2 + C_3)} \quad \frac{-j}{\omega C_{ST}}$$

$$\frac{1}{C_x} = \frac{1}{C_2 + C_3} + \frac{1}{C_{ST}}$$

$$\frac{1}{C_x} = \frac{C_{ST} + C_2 + C_3}{C_{ST}(C_2 + C_3)}$$

$$C_{sample} : \quad C_3 = \frac{C_x(C_{ST} + C_2) - C_{ST} C_2}{C_{ST} - C_x}$$

The sample is heated and cooled through its Curie peak and measurements are taken at zero bias and at three different voltages. The results of these measurements shown in Figure 4 appear to be similar to those obtained for "thick" (or large" samples of ceramic titanate ferroelectrics. The intensity of light traversing through the sample between crossed polars is simultaneously measured as a function of temperature and field.

Intensity Measurements

The light-detecting device consists of a cadmium-sulfide photocell, a battery to drive the photocell, a microammeter and a variable resistance to provide some degree of control (Fig. 5.)

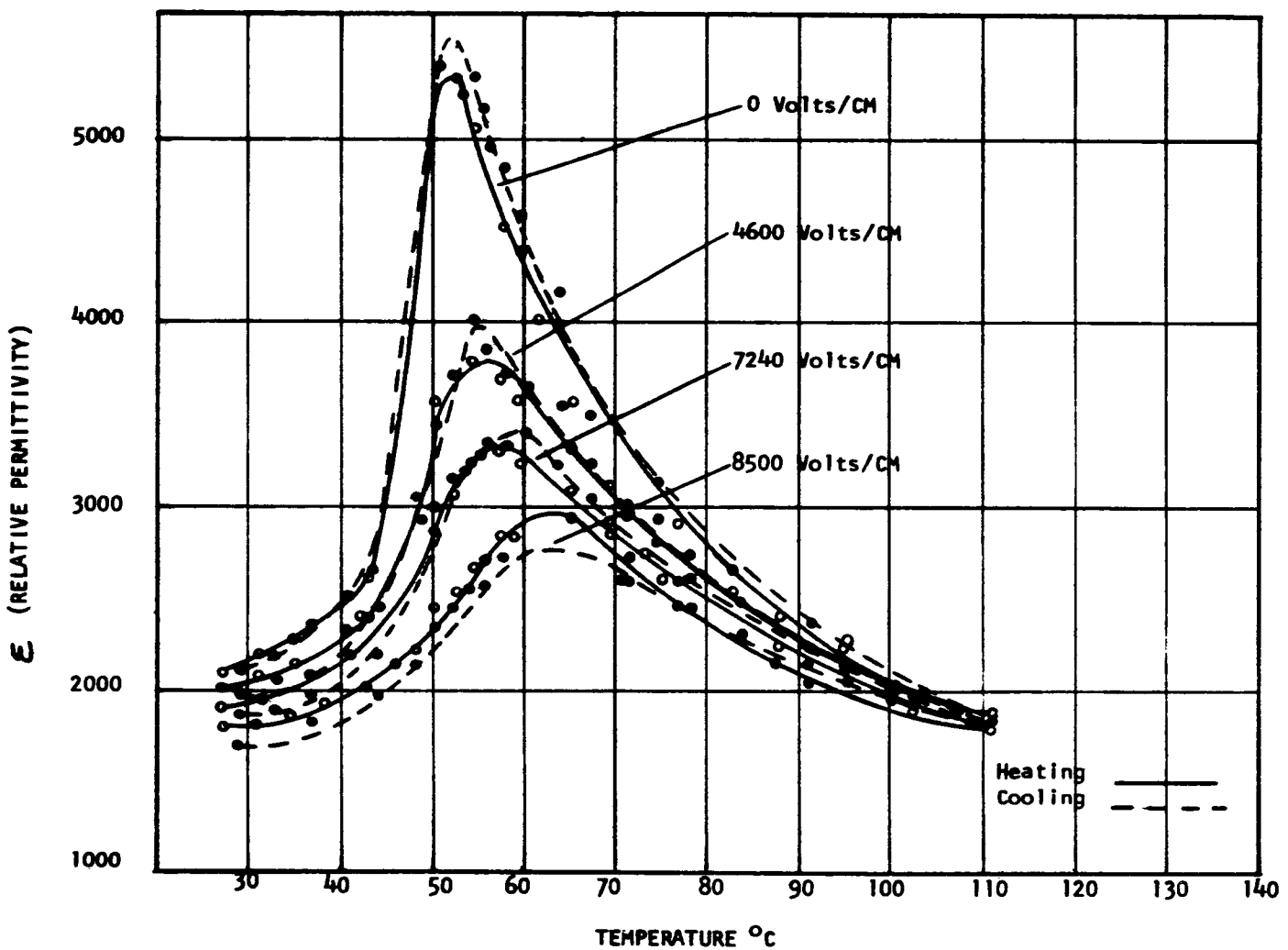

Figure 4. ε vs. temperature of a wedge of ceramic ferroelectric HS25Cd2.

The photocell is placed directly over the microscope eyepiece. Before and after every run, it is calibrated against a Kodak density film strip to correlate the microammeter reading with diffuse density values (see Figure 6.). These provide an absolute measure of the amount of light transmitted by the ferroelectric through crossed polars.

Included are the results of the capacitance and light-intensity measurements of a representative sample of a polycrystalline ferroelectric, HS25Cd2 (see Table I). From the diffuse-density versus temperature curves (Figure 7), it can be seen that there is a sharp increase in the denisty as the ceramic is heated above its Curie point, and also that the slope is steepest in the vicinity of the Curie temperature. The effect of a d-c bias on the specimen is to shift the entire curve toward higher temperatures. At any one temperature the thin section is considerably brighter when subjected to a field than when no field is applied. Hence, it is more birefringent and more ferroelectric under the former conditions. Similarly, when a bias is applied to the sample beyond its Curie temperature when it is normally paraelectric and appears dark under crossed polars, some of the grains definitely become bright, indicating that a ferroelectric state has been induced.

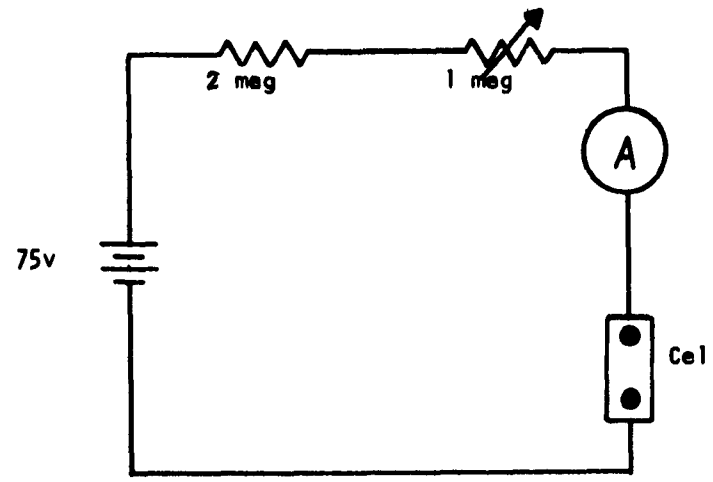

Figure 5. Circuit for intensity measurements.

$$\% \text{ TRANSMISSION} = \frac{\text{TRANSMITTED LIGHT}}{\text{INCIDENT LIGHT}}$$

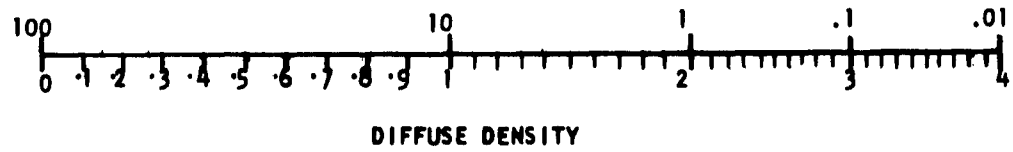

Figure 6. Scale of diffuse density against scale of percent transmission

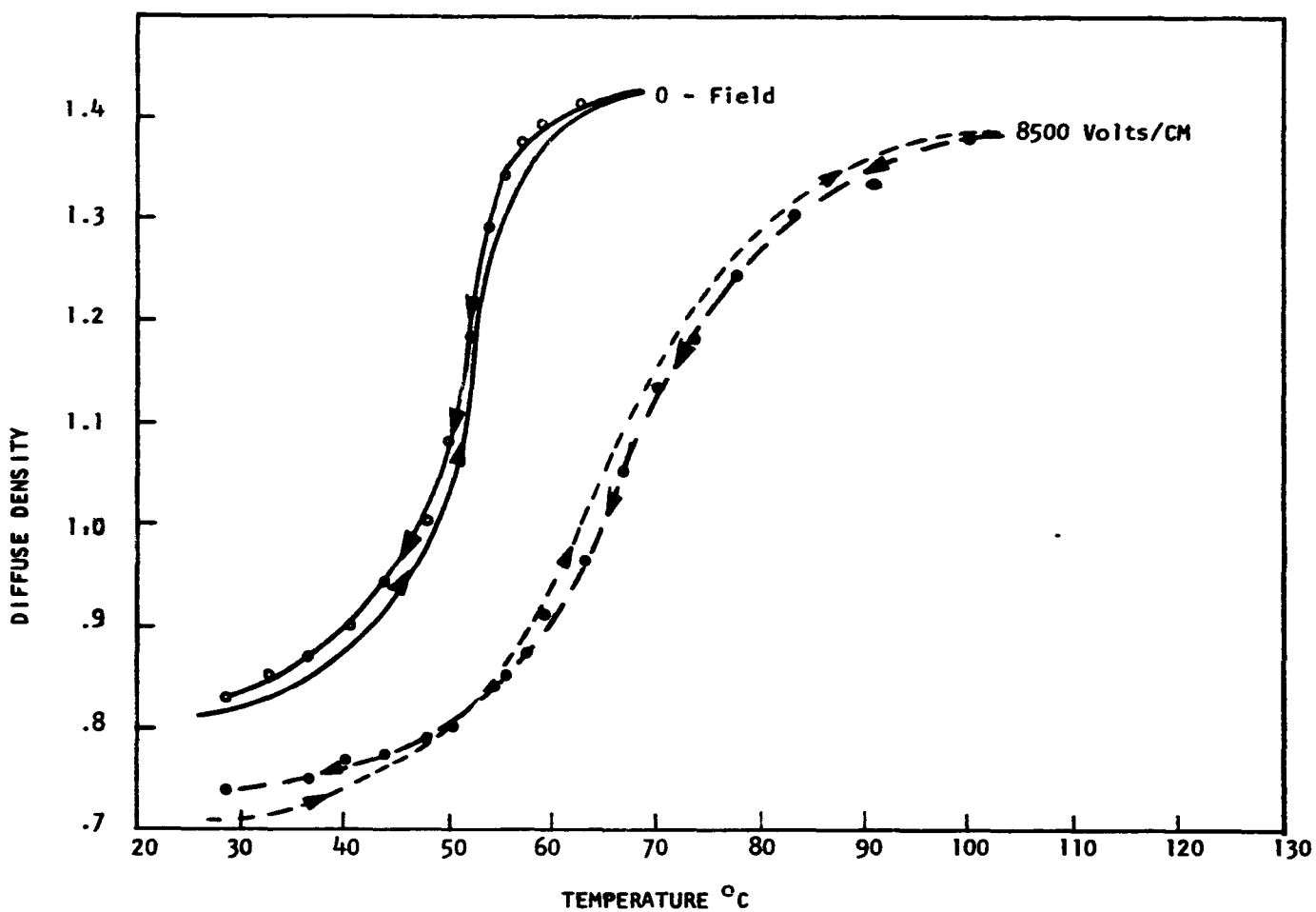

Figure 7. Diffuse density vs. temperature of a thin wedge of ferroelectric ceramic Hs25Cd2 measured under crossed nicols.

Concluding Remarks

The optical behavor of the ferroelectric ceramic thin sections, as observed by light-intensity measurements, follows their electrical behavior very closely. As the incremental permittivity goes through a peak value at the Curie temperature, the ceramic grains pass through a transition from ferroelectric to paraelectric and a simultaneous phase transition from tetragonal to isotropic. This is optically seen in transmitted polarized light as a gradual darkening and subsequent extinguishing of the grains.

It has been observed that the Curie peak shifts to higher temperatures in mixed ferroelectric ceramics when a biasing field is applied. The amount of polarized light passing through such a ceramic shows a maximum intensity change around the Curie temperature and, when the section is subjected to an electric field, this change similarly occurs at a higher temperature.

The voltage sensitivity of the ferroelectric ceramics is a direct result of this phenomenon. When subjected to strong d-c fields, the incremental permittivity of the sample is lowered, especially around the Curie temperature where the voltage sensitivity is greatest. Some workers who have extended their knowledge of the behavior of a single crystals to that of ferroelectric ceramics have concluded that the lowering of the in-

cremental permittivity in ceramics is due to the alignment of domains along the field direction. Since the permittivity as measured perpendicular to the polar direction is considerably lower than that measured along the polar direction, the net result of domain alignments throughout the grains of a ceramic would lead to a drop in the total permittivity when measured perpendicular to the field.

It has been demonstrated in a recent publication, however, that the change in permittivity with electric field in polycrystalline, mixed titanate ferroelectrics appears to be due to an induced ferroelectric state in grains which are paraelectric at zero bias rather than due to domain orientation.[3] In support of this point of view are the following optical observations:

1. No definite signs of domain rotation or motion, as evidenced by a shifting of domain striations, could be observed which would explain the instantaneous drop in capacitance when a d-c field is applied to the ceramic.

2. The greatest change in the intensity of transmitted light upon field application actually occurs when the ceramic is heated somewhat beyond the Curie termperature where most of the grains are paraelectric*. A strong d-c field applied to the

3. H. Diamond, J. Appl. Phys., 32, 5 (May 1961)

* See diffuse-density-vs.-temperature chart

almost extinguished sample results in a brightening equivalent to temperature conditions which existed 15-20°C below the measured one at zero bias, where the sample had been clearly ferroelectric. Thus we think of a field-induced ferroelectric state in the paraelectric grains as the main cause of voltage sensitivity. Domain alignment in the field direction would have little influence on the permittivity at this point since most of the grains are isotropic and have no domains.

It should also be pointed out that when domain alignment could occur, i.e., when the ceramic grains are all totally ferroelectric, the applied field changes the light intensity (and the permittivity) by only a very small amount and therefore it seems justified to assume that the domains in the ceramic are "frozen in". A small change in intensity with applied fields has also been observed when the sample is heated to far beyond its Curie temperature. The changes here may perhaps be intuitively explained as strain effect.

INVESTIGATION OF COLEMANITE FERROELECTRICS

REVIEW

After we had studied the literature of about 100 ferroelectric materials, the mineral colemanite was selected for further study. The main criteria used in selecting a material

were:

1. The average permittivity should be as low as possible to mitigate matching problems.

2. The ratio of the value of permittivity at the peak of the ε vs. T curve to the minimum permittivity $(\varepsilon_{max}/\varepsilon_{min})$ should be large, (see Figure 8). Based on the theoretical considerations mentioned earlier, our group feels this ratio is directly related to the change of the small signal permittivity with electric field.

Colemanite met these criteria better than any of the materials on the basis of published data.

Experimental work was first directed toward reproducing Wieder's data[4] on colemanite single crystals to check the accuracy of the published data and to get some experience in handling the material. Our results compared favorably with the published data. Two of our original curves are shown in Figures 9 and 10.

To distribute the Curie temperatures and spread the very sharp peak of the ε vs. T curve over a wider temperature range, we wished to devise a colemanite sample in polycrystalline form. Our samples of polycrystalline colemanite have been made by mixing a small amount (5%) of a thermosetting resin binder with colemanite powder (obtained by grinding the single crystal). This mixture was then pressed at 20,000 psi to produce a mechanically rigid sample. Results of initial experiments on these

4. H. Wieder, J. Appl. Phys., 30, 7 (July, 1959)

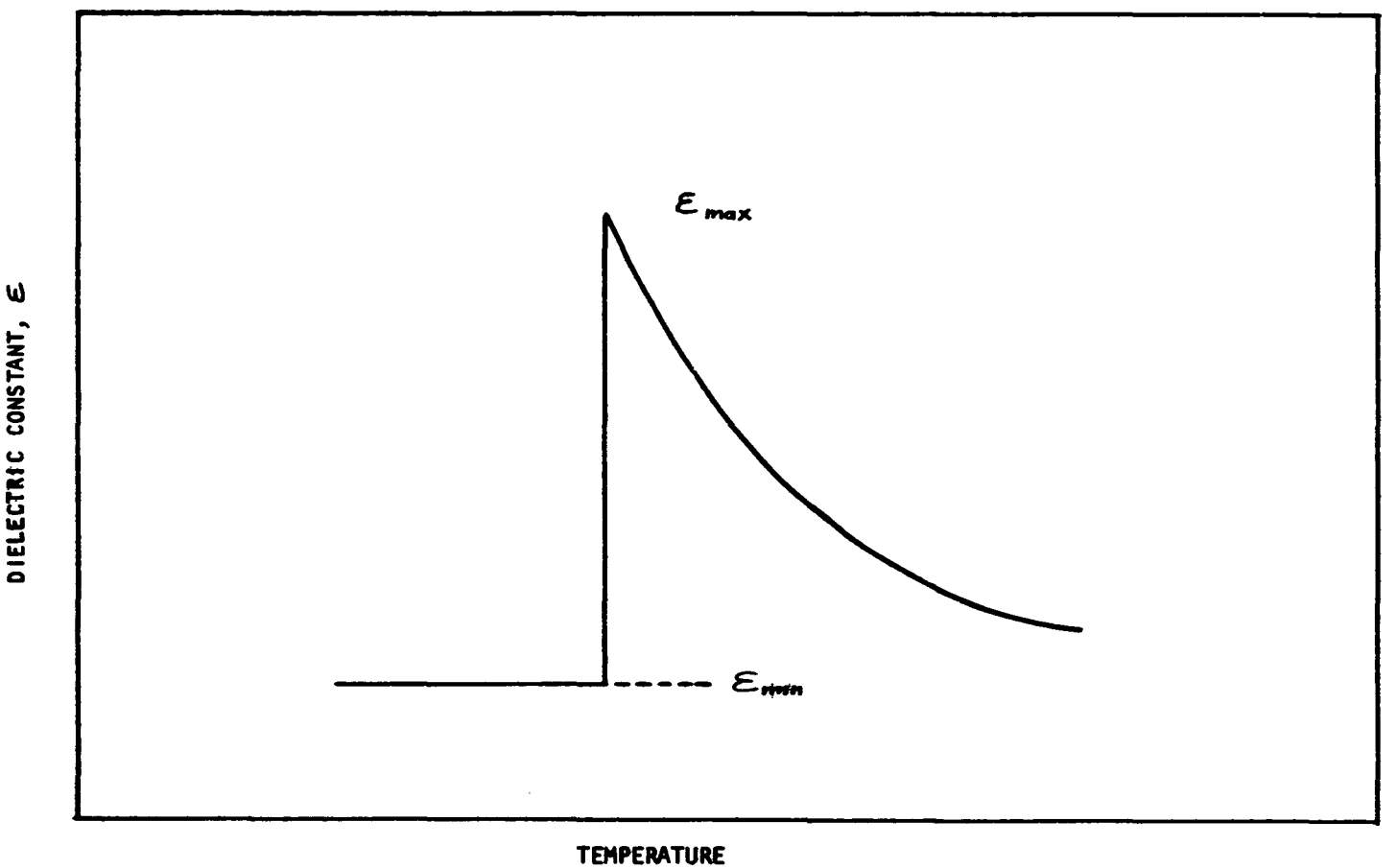

Figure 8. Schematic diagram explaining ε_{max} and ε_{min}.

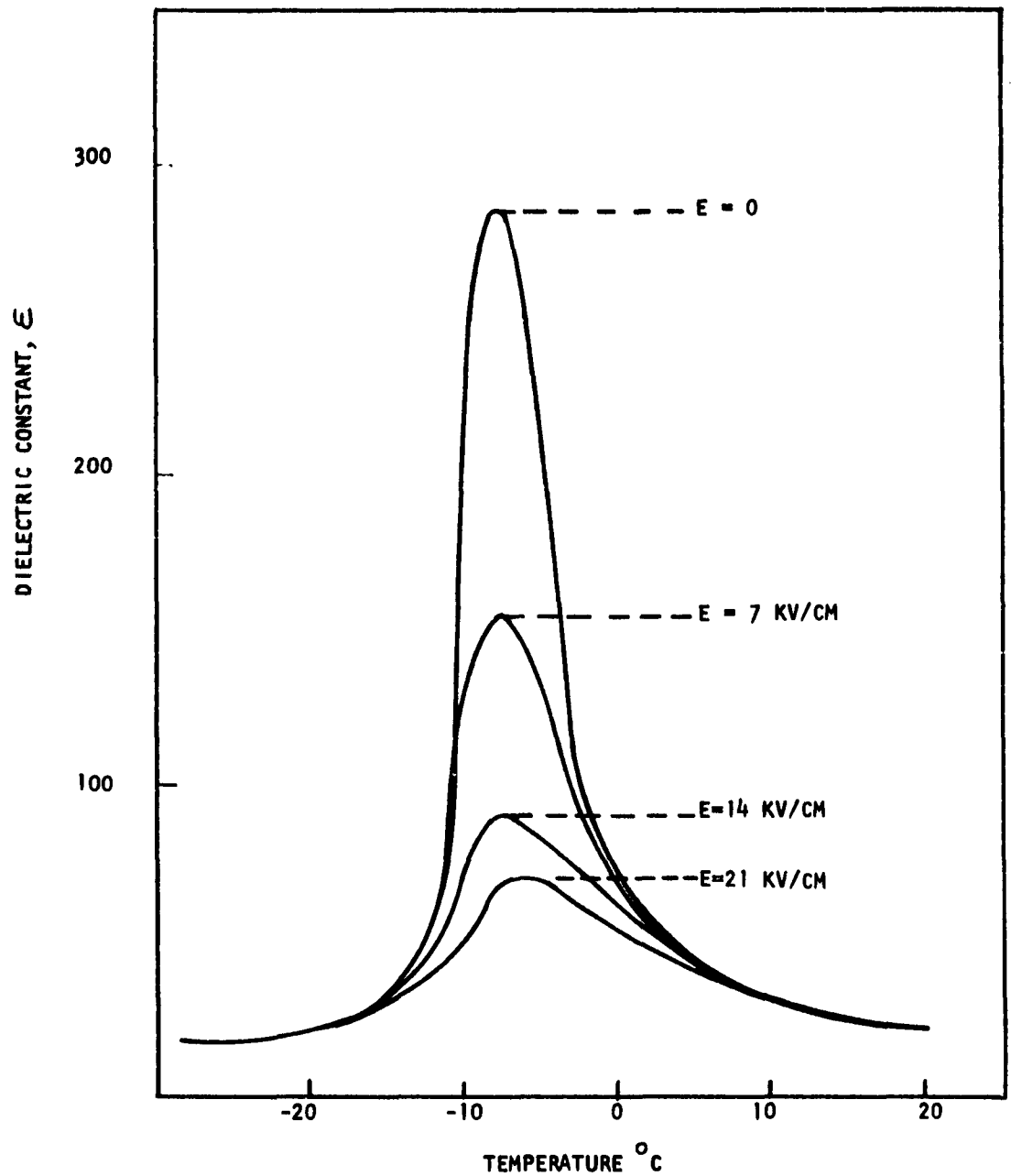

Figure 9. ε vs. temp. for various values of electric field for single crystal colemanite. (Field parallel with the ferroelectric axis.)

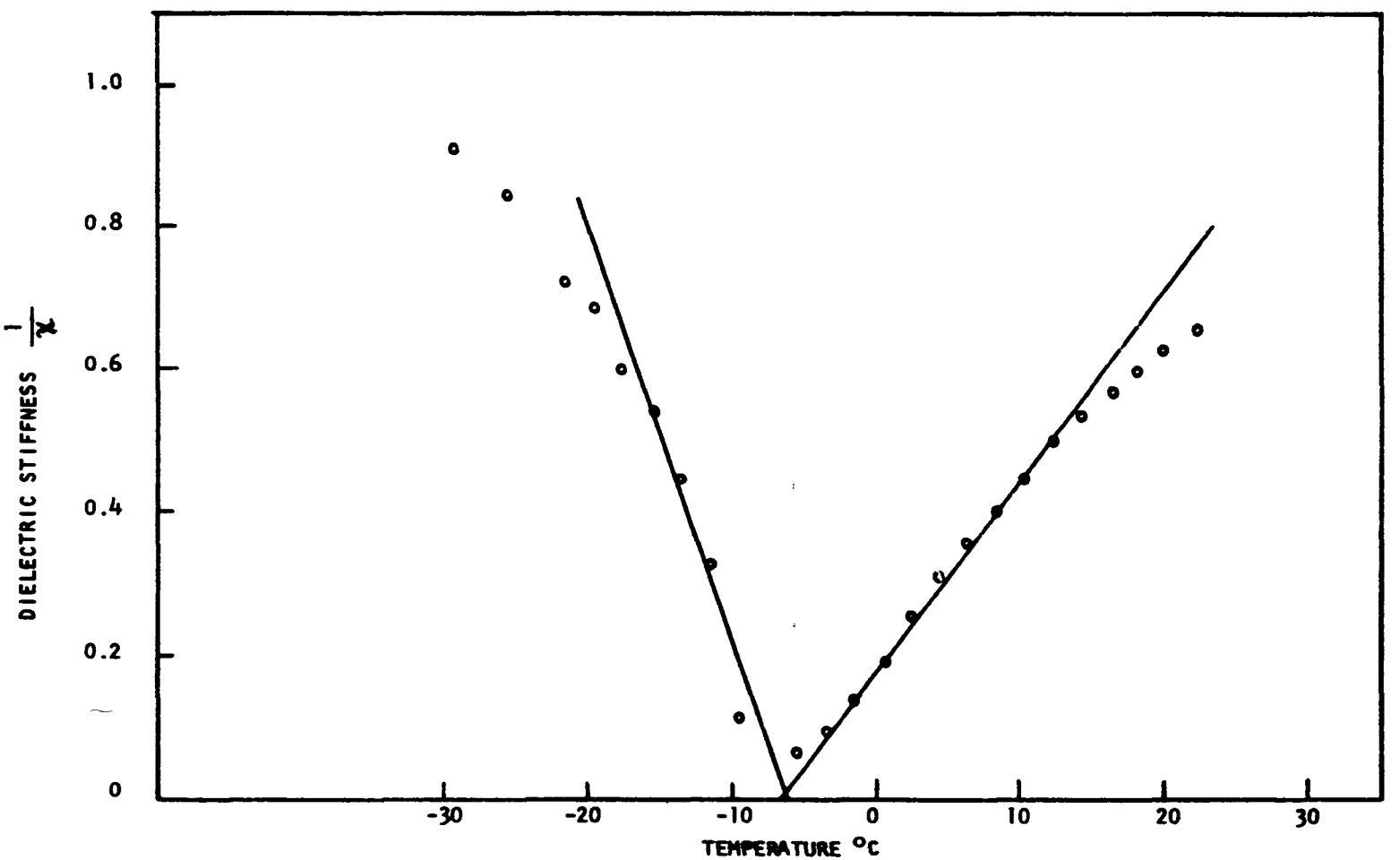

Figure 10. Dielectric Stiffness ($1/\chi$) vs. T. for a single crystal colemanite.

samples are shown in Figure 11.

In addition to this work, efforts were made to synthesize colemanite single crystals in our laboratory. Our attempts proved to be unsuccessful and this phase was discontinued. Had this work been successful, it might have been possible to initiate controlled experiments on modifying dielectric properties by atomic substitutions in the original colemanite structure.

To use a ferroelectric material in a nonlinear application, it is desirable to optimize the change in magnitude of ε as a function of applied field with a minimum of dielectric loss and thermal sensitivity. An attempt to do this was the next step in our study of colemanite and was attacked in two ways: first, by reducing the amount of binder in the polycrystalline sample and second, by adding a high dielectric material to fill up the voids between grains. The results of this work are described below.

Reducing the amount of low ε material in a mixture of two dielectrics will increase the effective field across the high ε material. Because the permittivity of colemanite is of the order of 30 and that of the resin about 5, it is evidently desirable to reduce the amount of resin in our polycrystalline material to a minimum. Several samples were manufactured with

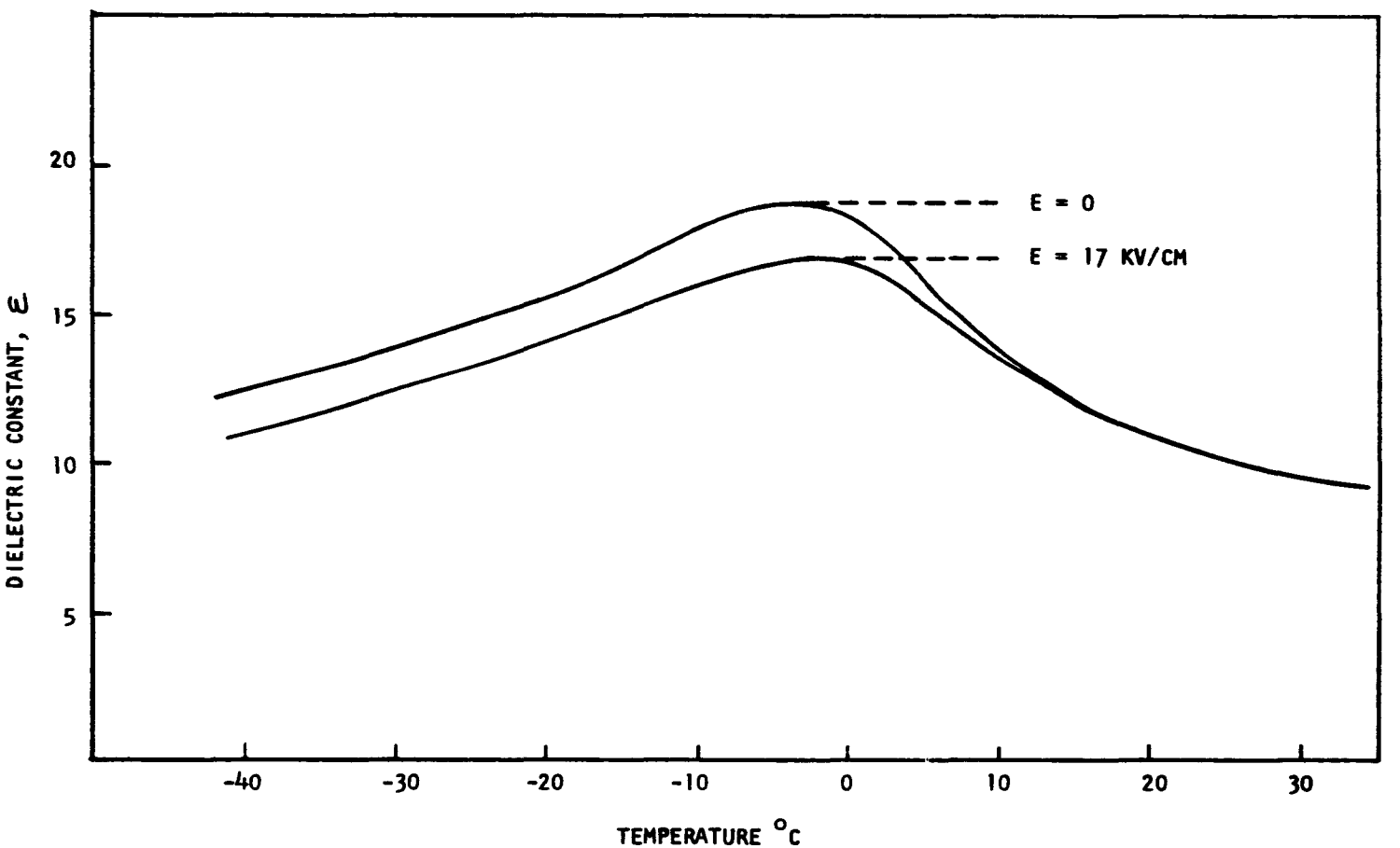

Figure 11. Dielectric constant vs. temperature for polycrystalline colemanite.

varying percentages of resinbinder to determine the smallest amount of binder required to produce a mechanically stable product. Experimental tests showed a surprising result. Changing the percentage of resin over a small range has very little effect on the shape and magnitude of the ε vs. T curve. Therefore, the ratio of $\varepsilon_{max}/\varepsilon_{min}$ can apparently not be increased appreciably by reducing the percentage of resin.

A second approach to the problem of increasing the electric field in the colemanite was to fill the air voids in the polycrystalline colemanite with a very high ε material. $Ba\text{-}Sr\text{-}TiO_3$ with a maximum permittivity at 0°C was chosen. Ten to twelve percent of a very fine (300 mesh) powder of $Ba\text{-}Sr\text{-}TiO_3$ was added to a mixture of thermosetting resin and colemanite powder before pressing. Measurements on the pressed samples showed that the permittivity is increased, but there is no noticeable effect on the nonlinearity (change in permittivity with field). It is difficult to explain this result. Since the permittivity of the sample apparently increased as a result of the addition of the titanate filler, one would naturally expect that the material would also be more field-sensitive - especially since the titanate filler is in itself field-sensitive.

The effect of the electric field on dielectric constant in the polycrystalline samples is disappointingly small compared to that of the single crystal (see figure 9 and compare with Figure 11). Neither of the two approaches described above seemed to improve the situation. What is even more frustrating is that several other questions are ruined by comparing a typical ε vs. T curve for a colemanite crystal with that of polycrystalline colemanite. (compare Figure 12 with Figure 9). For example: Why does ε max occur at a higher temperature in the polycrystalline colemanite than in the crystal? The crystal sections and powder were obtained from the same parent crystal. Why does the peak of the heating curve occur at -5°C, while the peak of the cooling curve is 0°C? This is just the opposite of the result that is usually observed in ordinary thermal hysteresis. Why does the minimum dielectric constant of the crystal occur below the Curie temperature, whereas the reverse is true for the polycrystalline material?

The answers to these questions are not known at this time and may appear irrelevant to the problem at hand. However, these thermal properties of polycrystalline colemanite must undoubtedly be related to the nonlinear electrical properties as is the case for the single crystal. An interpretation of the

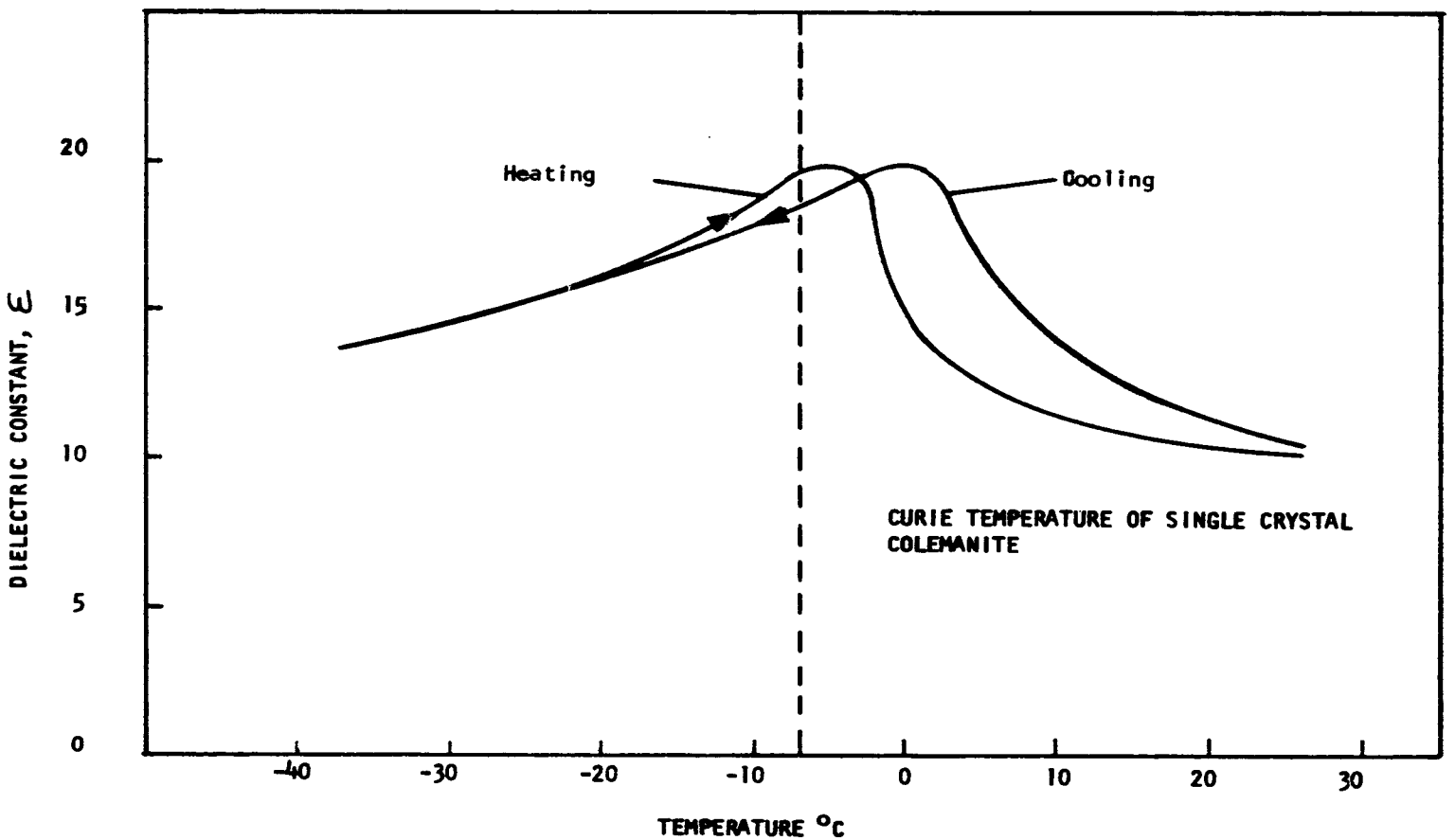

Figure 12. Heating and cooling curves of polycrystalline colemanite.

electrical behavior, based on a thermodynamic analysis, is given in the next section.

One further point should be mentioned in connection with our experiments with polycrystalline colemanite. It is well known that for a single crystal of this material, the permittivity ε depends on the direction in the crystal. Moreover, only one direction in the crystal exhibits ferroelectric properties. In directions perpendicular to this ferroelectric axis, the material shows no Curie temperature, and does not display nonlinear properties with electric field. In other words, in these latter directions the substance is for all practical purposes a well-behaved linear dielectric. Hence in a polycrystalline sample the grains would be expected to be randomly oriented so that the nonferroelectric orientations would tend to "dilute" the ferroelectric properties of those grains which are favorably oriented. This is not really what happens for colemanite, however. This mineral has a very definite cleavage plane normal to the ferroelectric axis, causing it to form small flakes when ground into a powder. These flakes tend to compact under pressure to form a material which has a high percentage of grains with a ferroelectric axis along the direction of pressing. That this is the case may be seen from the results of experiments depicted in Figure 13.

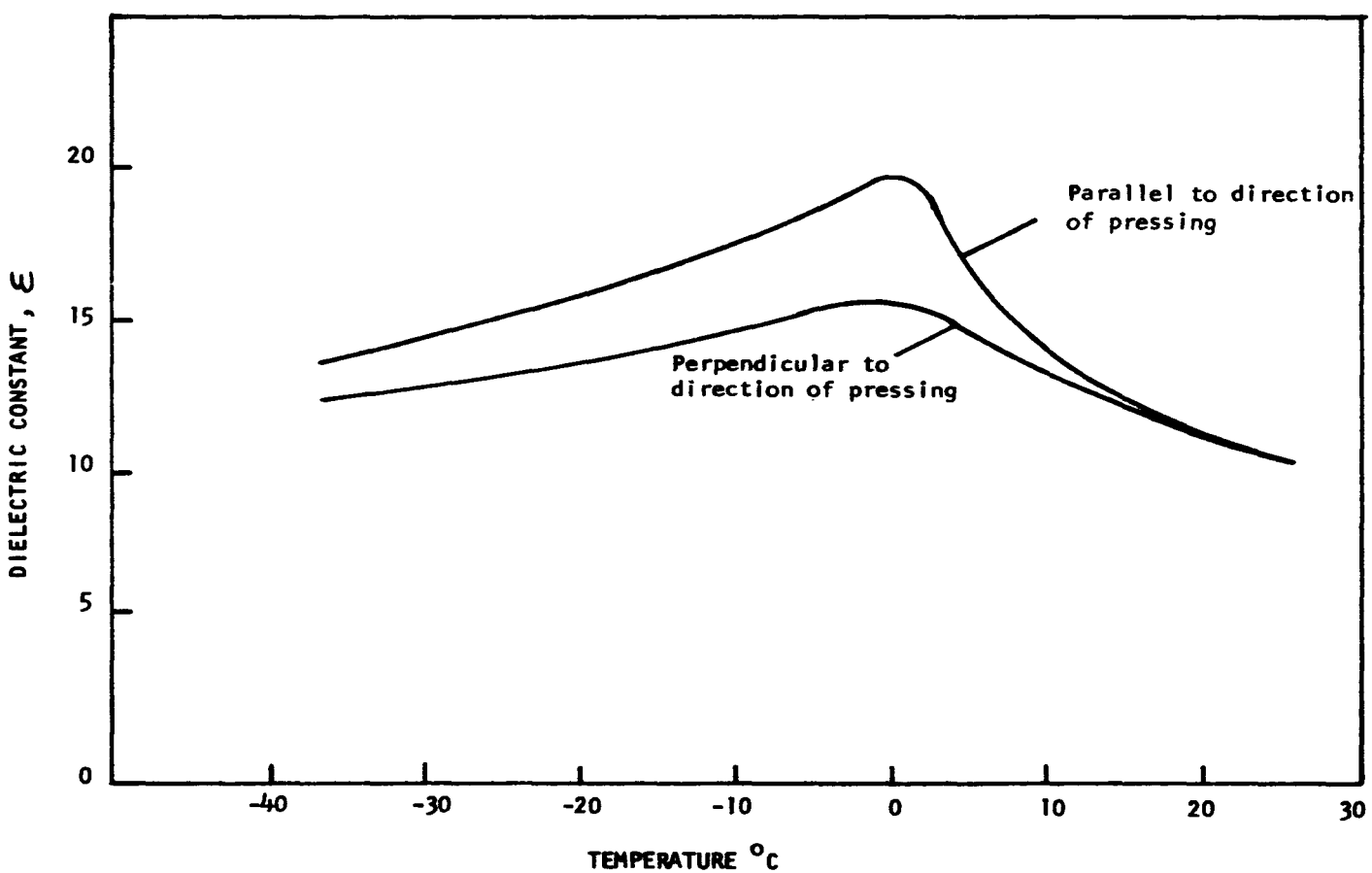

Figure 13. ε vs. T for polycrystalline colemanite measured parallel and perpendicular to direction of pressing.

Here we compare dielectric constant for a polycrystalline colemanite both parallel and transverse to the direction of pressing. A definite difference is seen and attributed to the way in which the flakes compact under pressure.

COMPUTATION OF ε VS. T AND E FOR POLYCRYSTALLINE COLEMANITE

To obtain a theoretical estimate of what may be expected for the field-sensitivity and thermal behavior for polycrystalline colemanite, the following analysis was made, with these assumptions:

1. Polycrystalline colemanite consists of a collection of grains, each one of which has the dielectric properties of a miniature single crystal.

2. The ferroelectric axis of each grain is presumed to lie along the direction of the applied field. This is only an approximation but may not be too unrealistic because of the way the colemanite grains must compact under pressure with the flake-like grains oriented normal to the direction of pressing. Because of this assumption then computed permittivity vs. field will be the maximum expected value.

3. The Curie points of the crystallites are taken in a statistical distribution about some convenient temperature, say the Curie temperature of a macroscopic single crystal ($-7^{o}C$). We call this temperature T_r. This distribution is thought to be produced by chemical inhomogeneities and strains on the individual grains.

4. The thermodynamic free-energy function of the crystallites is of the same form as that for the single crystal.

Under these assumptions, the average permittivity $\overline{\varepsilon(T,E)}$,

of such a collection of grains has the following form, using a Gaussian distribution:

$$\overline{\varepsilon(T,E)} = \frac{\int_0^\infty \varepsilon(T, T_c E)\, e^{-\frac{(T_r - T_c)^2}{\alpha^2}}\, dT_c}{\int_0^\infty e^{-\frac{(T_r - T_c)^2}{\alpha^2}}\, dT_c} \qquad (1)$$

where

T_c is the Curie temperature of each individual grain

T_r is the Curie temperature of a macroscopic single crystal

E is the electric field

T is the temperature, and

α is the variance of the distribution.

The function $\varepsilon(T, T_c, E)$ is obtained from the Helmholtz free-energy function in the following way.

Suppose the free-energy function $A(P,T)$ can be expressed as a power series expansion in the polarization[5] P as follows:

$$A(P,T) = A_0 + a(T)P^2 + bP^4 + cP^6 + \cdots\cdots \qquad (2)$$

From elementary thermodynamics we know that

$$\left(\frac{\partial A}{\partial P}\right)_T = E \quad \text{and} \quad \left(\frac{\partial^2 A}{\partial P^2}\right)_T = \left(\frac{\partial E}{\partial P}\right)_T = \frac{1}{\chi} \qquad (3)$$

5. H. Weider, J. Appl. Phys., 30, 7 (July 1959)

also, $E(P,T) = 2a(T) + 4bP^3 + 6cP^5 + \cdots\cdots$ (4)

The factor χ is called the dielectric stiffness and is related to the permittivity ε via

$$\chi = \frac{\varepsilon - 1}{4\pi} \quad \text{in cgs units} \tag{5}$$

From the above and from (2) we have

$$\frac{4\pi}{\varepsilon - 1} = \frac{1}{\chi} = 2a(T) + 12bP^2 + 30cP^4 + \cdots\cdots \tag{6}$$

Since via relation (4) P depends on E, one can solve (6) for $\varepsilon(T, T_c E)$ and this in turn is substituted into the integral in (1). In general the evaluation of these integrals must be done numerically on an electronic computer. The constants a, b, and c in (2) have been determined experimentally for colemanite by Weider[6].

Actual computations based on Weider's constants and for a variance α of 10° C are shown in Figure 14. The permittivity vs. temperature is given for zero field and for a field of 15 kv/cm. Over the temperature range considered for the latter curves (-12°C to $+3^{\circ}$C), the relative change in permittivity with electric field is comparable to that obtained experimentally (compare Figure 14 with Figure 11). The most striking feature about the theoretical curves is that the permittivity is fairly

6. H. Wieder, J. Appl. Phys., 30, 7 (July, 1959)

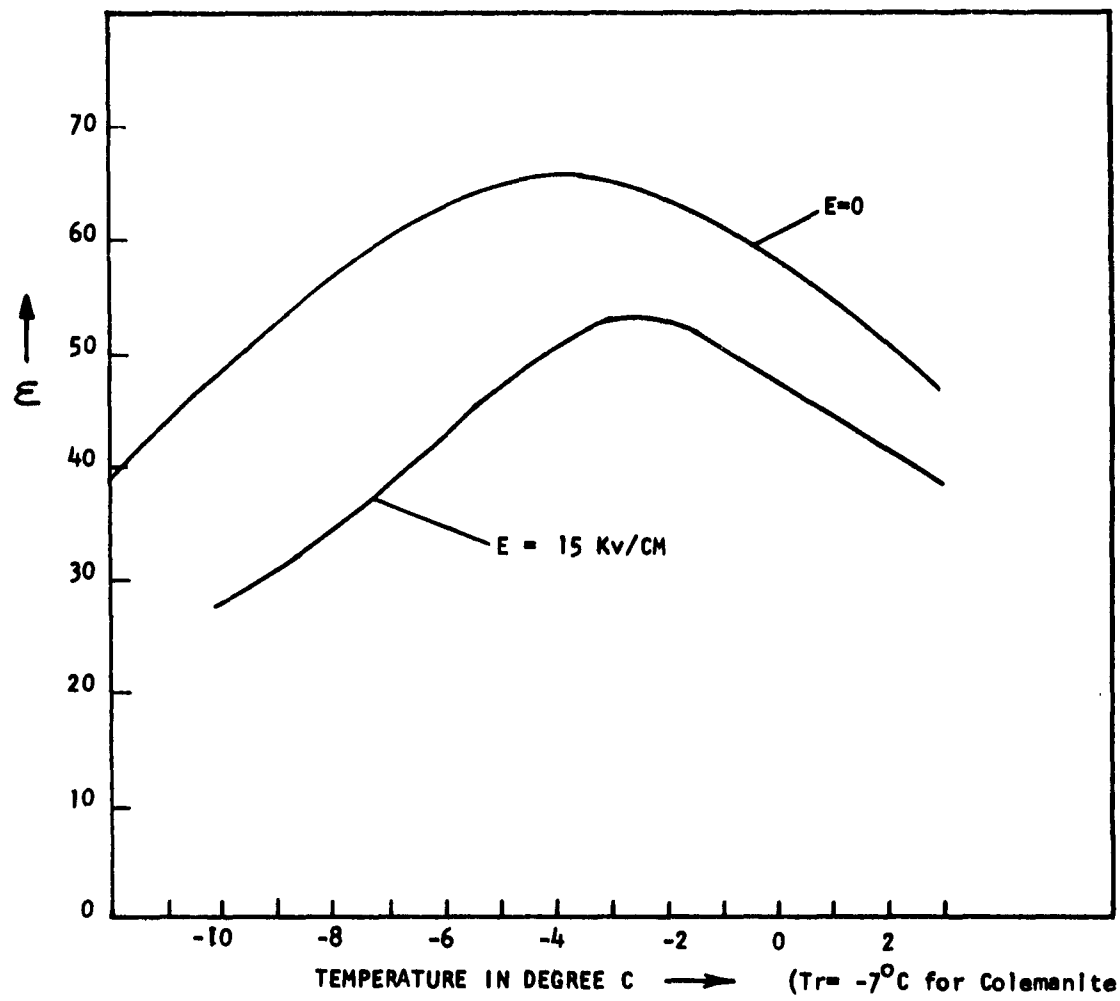

Figure 14. Theoretical ε vs T for polycrystalline colemanite for zero field and for a field of 15 Kv/CM.

high (about twice that of the experimental data). Both the theoretical and experimental change in ε with field is disappointingly small for most applications.

CONCLUSIONS

The following conclusions may be drawn from the work described in this report.

On the basis of the optical study of titanate ferroelectric thin sections, we have direct experimental verification of the fact that the change in dielectric constant with electric field does not depend on domain rotation and alignment. The change of dielectric constant is observed to be correlated with a field-induced change of phase (cubic to tetragonal) in the individual crystallites making up the ceramic. The implication of this result is that it is theoretically necessary that the change in permittivity with field is maximum where the thermal instability is maximum. That is, in order that the ferroelectric be field-sensitive, it must also be proportionately temperature-sensitive.

In light of this positive identification of the mechanism for the nonlinear behavior in the titanates, we extended the investigation to other classes of ferroelectrics which potentially would behave in a manner similar to the

mixed titanates. The latter materials are somewhat difficult to apply at microwave frequencies due to the problem of matching into their very high value of permittivity. Thus we focused attention on the comparatively low-permittivity but field sensitive material colemanite.

Experimental data on single-crystal colemanite show that very large changes in dielectric constant with field are obtainable but at the price of extreme thermal sensitivity (see Fig. 9). This was expected, however, on the basis of the discussion above. The general levels of the dielectric constants are about an order of magnitude less than those for the titanates, however. In an attempt to smooth the temperature variation, a colemanite "ceramic" (polycrystalline aggregate) was made. We were successful in reducing the thermal sensitivity, but the change in permittivity with electric field was severely limited (Fig. 11). It is interesting to note that the dielectric constants run only between 15 to 20 for this composition. Other experiments made on the polycrystalline colemanite (such as thermal hysteresis, etc.) appeared too erratic and inconsistent to afford an explanation at this time.

Computations based on the considerations of Investigation of Colemanite Ferroelectrics show that the results of experimental measurements of ε vs. T and E for polycrystalline colemanite

are roughly what is expected theoretically. One notes, however, that the experimental voltage-sensitivity is not as great as that predicted theoretically. This is probably because of several idealizations and simplifying assumptions made in the latter case. An example of this is that the calculations were based on the supposition that the colemanite grains will be oriented during the pressing procedure (due to the flake-like character of the grain) in such a way that the ferroelectric axis of all the grains would be aligned. Any deviation from this assumption would effectively produce a "diluted" ferroelectric and a lower voltage-sensitivity would result.

We conclude this report with the following remarks. Our approach to the study and ultimate improvement of nonlinear dielectrics has been contrary to the cookbook or recipe variation prevalent in the materials field today. With the positive identification of the nonlinear mechanism and with our experience in applying theprinciples of the theory to a substance such as colemanite, several other substances naturally suggest themselves at this time as being potentially superior to either colemanite or the other titanates. Among the more interesting substances are the polar solids and low-permittivity ferroelectrics of the double Curie point type.