408 978

N-63-4-2

CATALOGED BY DDC
AS AD No. 408978

BOEING

JUL 24 1963
TISIA D

SEATTLE, WASHINGTON

THE BOEING COMPANY

CODE IDENT NO. 81205

NUMBER D2-14826

TITLE TECHNICAL FACILITY CRITERIA FOR THE MINUTEMAN LAUNCH FACILITIES - FRANCIS E. WARREN AFB, WYOMING (U)

MODEL NO. WS-133A CONTRACT NO. AF04(694)-107

ISSUE NO. 34 ISSUED TO DDC

Specification: S-133-30-15

SPECIAL LIMITATIONS ON ASTIA DISTRIBUTION

ASTIA may distribute this report to requesting agencies subject to their security agreement, approved fields of interest, and the following:

☒ UNLIMITED—To all agencies of the Department of Defense and their contractors.

☐ LIMITED—To U. S. Military organizations only.

This report may be distributed to nonmilitary agencies not approved above subject to Boeing approval of each request.

NOTE: the LIMITED category may be checked only because of actual or potential patent, proprietary, ethical, or similar implications.

| | | |
|---|---|---|
| PREPARED BY | D. E. Dougald<br>D. E. Dougald | 6-17-63 |
| SUPERVISED BY | R. O. Smith<br>R. O. Smith | 6-19-63 |
| APPROVED BY | G. A. Gutkowski<br>G. A. Gutkowski | 6/19/63 |
| APPROVED BY | H. N. Stuverude<br>H. N. Stuverude | 6/19/63 |
| CLASS & DISTR APPROVED BY | G. A. Gutkowski<br>G. A. Gutkowski | 6/19/63<br>(DATE) |

REV SYM _____

VOL. NO. OF

SECT. PAGE 1 of 38

U3 4287 9035 ORIG. 8/62

2-8142-2

## ACTIVE PAGE RECORD

| SECTION | ORIG REL PAGE NO. | REV SYM | ADDED PAGES | | | | | | SECTION | ORIG REL PAGE NO. | REV SYM | ADDED PAGES | | | | | |
|---|---|---|---|---|---|---|---|---|---|---|---|---|---|---|---|---|---|
| | | | PAGE NO. | REV SYM | PAGE NO. | REV SYM | PAGE NO. | REV SYM | | | | PAGE NO. | REV SYM | PAGE NO. | REV SYM | PAGE NO. | REV SYM |
| | 1 | | | | | | | | | | | | | | | | |
| | 2 | | | | | | | | | | | | | | | | |
| | 3 | | | | | | | | | | | | | | | | |
| | 4 | | | | | | | | | | | | | | | | |
| | 5 | | | | | | | | | | | | | | | | |
| | 6 | | | | | | | | | | | | | | | | |
| | 7 | | | | | | | | | | | | | | | | |
| | 8 | | | | | | | | | | | | | | | | |
| | 9 | | | | | | | | | | | | | | | | |
| | 10 | | | | | | | | | | | | | | | | |
| | 11 | | | | | | | | | | | | | | | | |
| | 12 | | | | | | | | | | | | | | | | |
| | 13 | | | | | | | | | | | | | | | | |
| | 14 | | | | | | | | | | | | | | | | |
| | 15 | | | | | | | | | | | | | | | | |
| | 16 | | | | | | | | | | | | | | | | |
| | 17 | | | | | | | | | | | | | | | | |
| | 18 | | | | | | | | | | | | | | | | |
| | 19 | | | | | | | | | | | | | | | | |
| | 20 | | | | | | | | | | | | | | | | |
| | 21 | | | | | | | | | | | | | | | | |
| | 22 | | | | | | | | | | | | | | | | |
| | 23 | | | | | | | | | | | | | | | | |
| | 24 | | | | | | | | | | | | | | | | |
| | 25 | | | | | | | | | | | | | | | | |
| | 26 | | | | | | | | | | | | | | | | |
| | 27 | | | | | | | | | | | | | | | | |
| | 28 | | | | | | | | | | | | | | | | |
| | 29 | | | | | | | | | | | | | | | | |
| | 30 | | | | | | | | | | | | | | | | |
| | 31 | | | | | | | | | | | | | | | | |
| | 32 | | | | | | | | | | | | | | | | |
| | 33 | | | | | | | | | | | | | | | | |
| | 34 | | | | | | | | | | | | | | | | |
| | 35 | | | | | | | | | | | | | | | | |
| | 36 | | | | | | | | | | | | | | | | |
| | 37 | | | | | | | | | | | | | | | | |
| | 38 | | | | | | | | | | | | | | | | |

U3 4801 0600 ORIG. 8/62

2-8142-2

REV SYM_____

| REVISIONS | | | |
|---|---|---|---|
| SYM | DESCRIPTION | DATE | APPROVED |
| | | | |

U3 4287 9025 ORIG. 8/62

2-8142-2

REV SYM_____

## FOREWORD

The original requirements for the WS-133A Launch Facilities were initially presented in STL document GM 60-A001-04702 (S-133-30-10). The STL document covered facilities design criteria as well as the form, fit, and function requirements of the Associate Contractors' equipment for Minuteman Wing I at Malmstrom AFB, Montana.

State of the art progress has dictated numerous changes and improvements to the original Launch Facility requirements. A large number of these variations were incorporated into Wing I by a revised and updated GM 60-A001-04702 (S-133-30-10) issued as Boeing document D2-14324. Variations peculiar to Minuteman Wing II at Ellsworth AFB, South Dakota, were included in Boeing document D2-10692 which was issued as a supplement to the Wing I criteria document and was limited to changes and additions thereto.

Subsequent revisions to the Launch Facility requirements and improvements to the Weapon System, dictated the need for an original documentation of the facilities criteria for Wing III, North Dakota, in Boeing Document D2-13797. The first revision to Boeing Document D2-13797 incorporated criteria variations peculiar to Wing IV facilities at Whiteman AFB, Missouri.

Normal sequence of events would have placed the facilities design criteria in the hands of the Air Force agency awarding the facility contracts prior to the start of facilities design. Because of the Minuteman program concept of design and construction concurrency and also due to compressed schedules, this action did not occur for Wings III, IV and V. Nevertheless, the necessity for this document, as a base line for control of the form, fit, and function of the Associate Contractors' equipment, is most significiant if existing facilities are to be used to the maximum extent practical.

Wing III criteria has been modified and updated to indicate Wing V requirements as a result of the following actions:

1. Collation of facility requirements which were developed through MIL-D-9412c Functional Analysis of the Wing V Weapon System (S-133-11-0-5) and S-133-12-0-5);
2. Incorporation of basic design and equipment compatibility changes as designated by the Configuration Control Board;
3. Incorporation of MCL/FCR changes through 15 May 1963.
4. Incorporation of facility design improvements resulting from criteria and concept review meetings;
5. Review and Analysis of existing plans and specifications and "Basis of Design" for Wing V.

## FOREWORD

(Continued)

This specification describes the facility requirements necessary to make the Weapon System operable within established goals, with due consideration given to the existing facilities and associated conditions.

# TABLE OF CONTENTS


| | | PAGE |
|---|---|---|
| TITLE PAGE | | 1 |
| REVISION PAGE | | 2 |
| FOREWORD | | 4 |
| CONTENTS | | 6 |
| LIST OF FIGURES | | 7 |
| SECTION | TITLE | |
| 1.0 | SCOPE | 8 |
| 2.0 | APPLICABLE DOCUMENTS | 9 |
| 3.0 | GENERAL CRITERIA | 10 |
| 3.1.3 | Physical Description | 10 |
| 3.3.1 | Geographical | 10 |
| 3.6 | Summary of Changes to Section 3 Figures | 10 |
| 5.0 | INTEGRATED CRITERIA | 11 |
| 5.10 | Table 5-1 Launch Facility AGE | 11 |
| 5.11 | Summary of Changes to Section 5 Figures | 11 |
| 6.0 | SERVICE AREA AND ACCESS ROAD CRITERIA | 14 |
| 6.10 | Summary of Changes to Section 6 Figures | 14 |
| 7.0 | LAUNCHER SUPPORT BUILDING CRITERIA | 17 |
| 7.7 | Security | 17 |
| 7.8 | Summary of Changes to Section 7 Figures | 17 |
| 9.0 | LAUNCHER EQUIPMENT ROOM CRITERIA | 25 |
| 9.2.4 | Sight Tube | 25 |
| 9.8 | Summary of Changes to Section 9 Figures | 25 |
| 10.0 | LAUNCH TUBE CRITERIA | 32 |
| 10.2.1 | Layout | 32 |
| 10.8 | Summary of Changes to Section 10 Figures | 32 |

# LIST OF FIGURES


| FIGURE NO. | TITLE | PAGE |
|---|---|---|
| 5-3.1 | Intrasite Cabling and Conduit | 12 |
| 5-4 | Grounding Locations | 13 |
| 6-7.4 | Conduit Routing and Passive Reflector Location | 15 |
| 6-7.6 | Security Pole and J-Box Details | 16 |
| 7-1 | Environmental Control Equipment | 18 |
| 7-1.1 | Environmental Control Equipment Sections and Details | 19 |
| 7-2 | Electrical Equipment | 20 |
| 7-2.1 | Electrical Conduit Details | 21 |
| 7-2.2 | Platform Openings for Equipment Attachment | 22 |
| 7-2.3 | Switchboard Elevation | 23 |
| 7-3 | Interface Cabinet Connection Diagram | 24 |
| 9-1.4 | Umbilical Retract Details | 26 |
| 9-1.6 | Second Level Plumbing and Electrical Layout | 27 |
| 9-1.7 | Pipe Section and Details | 28 |
| 9-2 | Personnel Access System and Sight Tube | 29 |
| 9-2.3 | Developed View of CPF Enclosure | 30 |
| 9-6 | Telephone Jack Mounting | 31 |
| 10-1 | Plan and Section | 33 |
| 10-3 | Equipment and Service Lines | 34 |
| 10-3.1 | Location of Service Lines | 35 |
| 10-4 | Sections and Details | 36 |
| 10-6 | Missile Support Loads | 37 |
| 10-6.1 | Missile Support Plates and Details | 38 |

## 1.0 SCOPE

The technical facility criteria document for the Minuteman Launch Facilities at Francis E. Warren AFB is issued as a supplement to the Wing III Launch Facility criteria presented in Boeing Document D2-13797. The complete Wing V Launch Facility criteria consists of the following:

a. Sections one (1) through ten (10) of Document D2-13797 applicable to Wing III and Wing V.

   Section eleven (11) of Document D2-13797 identifies Wing IV peculiar criteria only, and is not applicable to Wing V.

b. Document D2-14826 which identifies the revised or additional requirements to site adapt and upgrade the Minuteman Launch Facilities for Francis E. Warren AFB in accordance with the latest Weapon System improvements. These requirements are identified by Paragraph and Figure notations corresponding to those in Document D2-13797. Where necessary, flagnote indicators are included on the Figures to assist in identifying FWAFB peculiar variations.

2.0 APPLICABLE DOCUMENTS

p. Change to read "Master Change Log updated as of 15 May 1963."

3.0 GENERAL / CRITERIA

3.1.3 Physical Description

Change reference from "Minot Air Force Base (MTAFB)" to read "Francis E. Warren Air Force Base (FWAFB)".

3.3.1 Geographical

Change paragraph to read "Wing V, the fifth Minuteman Operational Deployment Area, shall be sited in the vicinity of Francis E. Warren Air Force Base, (FWAFB) at Cheyenne, Wyoming."

3.5 Table 3-1, "RPIE Sub-System Failure Rates"

Failure Rates are based on 150 missile wing. Values should be proportioned to reflect failure rates for 200 missile wing.

3.6 SUMMARY OF CHANGES TO SECTION 3 FIGURES.

3.6.1 Title of Figure 3-1 should read Francis E. Warren Air Force Base, Wyoming.

## 5.0 INTEGRATED CRITERIA

### 5.10 Table 5-1 Launch Facility AGE

The following Wing V peculiar Launch Facility AGE should be entered in the corresponding item numbers of Table 5-1. These Wing V peculiar Figure "A" numbers are applicable throughout Document D2-13797 wherever corresponding equipment is referenced.

| Item No. | Fig. "A" | Equipment |
|---|---|---|
| 4 | 1248.5 | Cable Assembly Set |
| 8 | 1322.5 | Support, Missile, Suspension and Alignment System GSU-112/E |
| 14 | 1228.5 | Status - Command Message Processing Group OA-3594/GYK-2 |
| 15 | 1251.5 | Digital Data Group OA-3593/GYK-2 |
| 25 | 1374.5 | Arrestor Set, Electrical Surge MX /GSW-4 |
| 27 | 1377.5 | Interconnecting Box J-1386/GSW-4 |

### 5.11 SUMMARY OF CHANGES TO SECTION 5 FIGURES.

5.11.1 Figure 5-3.1 is revised to indicate the FWAFB peculiar layout of intra-site cabling and conduits between the Launcher and LSB.

5.11.2 Figure 5-4 is revised to show peculiar conduit layout to grounding points for FWAFB.

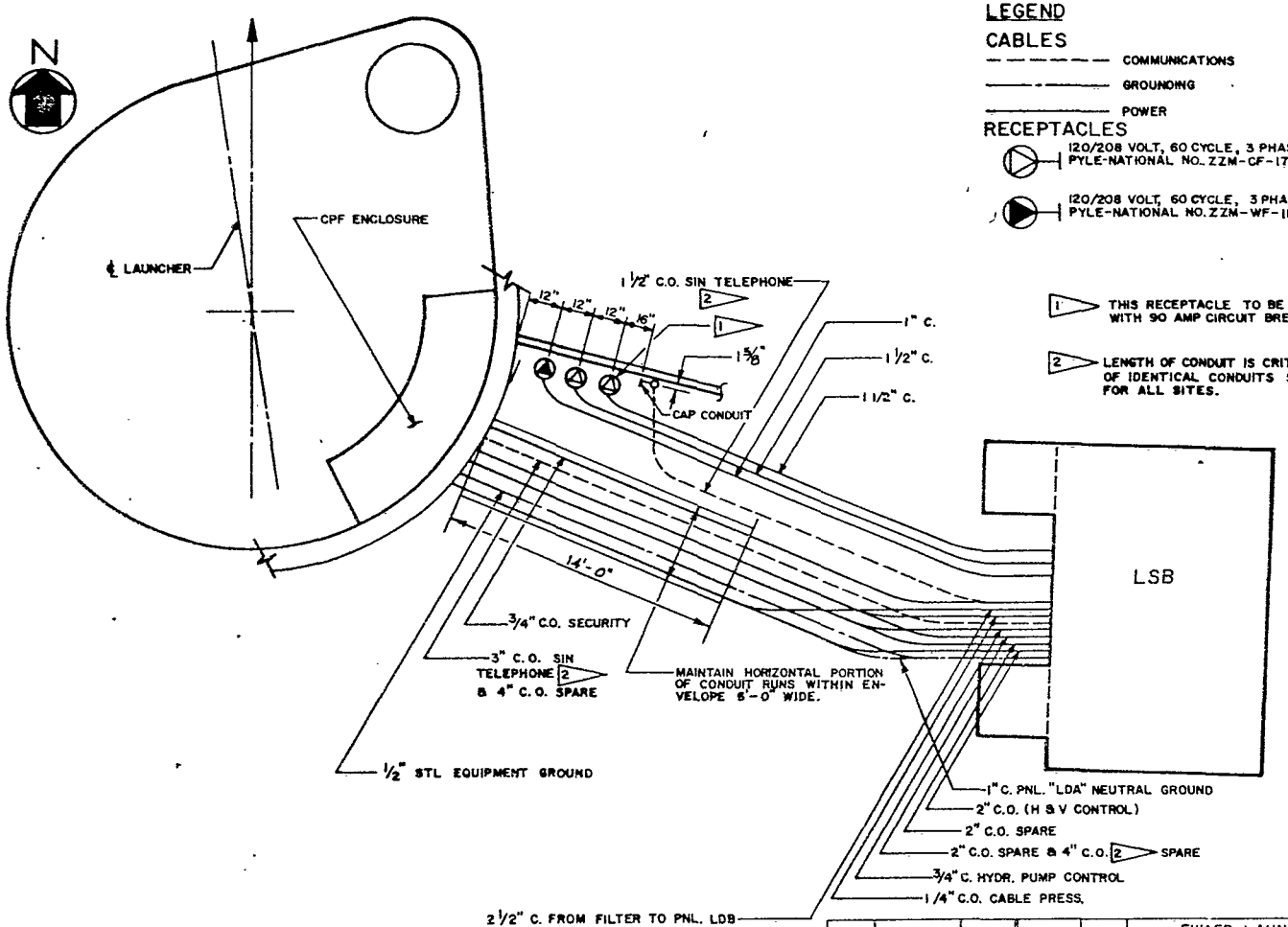


## LEGEND

### CABLES

- COMMUNICATIONS
- GROUNDING
- POWER

### RECEPTACLES

- 120/208 VOLT, 60 CYCLE, 3 PHASE, 5 WIRE, 60 AMP, PYLE-NATIONAL NO. ZZM-CF-17120-37 S RECPT.
- 120/208 VOLT, 60 CYCLE, 3 PHASE, 5 WIRE, 30 AMP, PYLE-NATIONAL NO. ZZM-WF-11716-16 S RECPT.

1 THIS RECEPTACLE TO BE PROTECTED WITH 90 AMP CIRCUIT BREAKER

2 LENGTH OF CONDUIT IS CRITICAL. VARIATION IN LENGTH OF IDENTICAL CONDUITS SHALL NOT EXCEED 6'-0" FOR ALL SITES.

| CALC | | | REVISED | DATE | FWAFB LAUNCH FACILITY | D2-14826 |
|---|---|---|---|---|---|---|
| CHECK | | | | | INTEGRATED CRITERIA | |
| APR | | | | | INTRASITE CABLING & CONDUIT | 5-3.1 |
| APR | | | | | THE BOEING COMPANY | PAGE 12 |

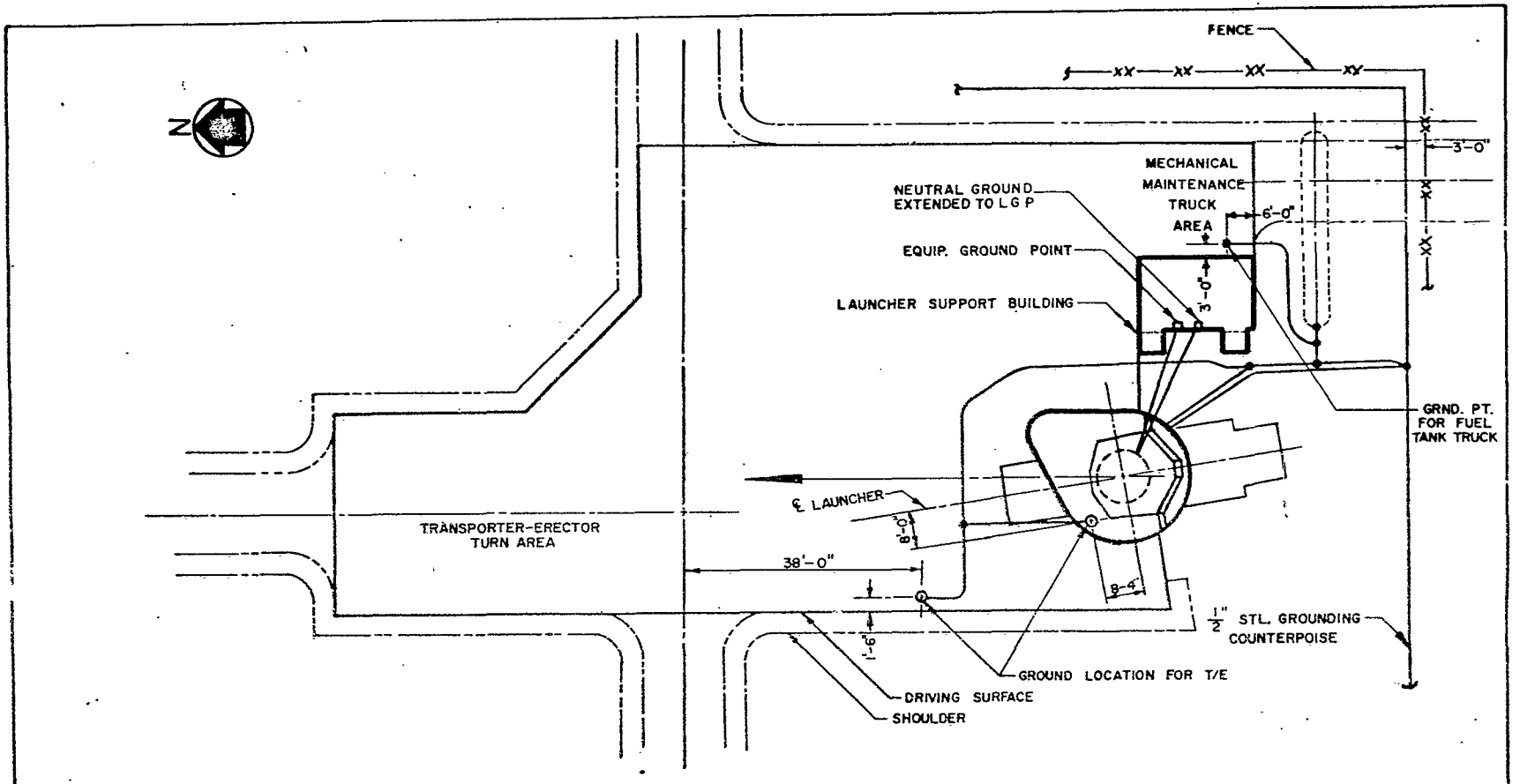


SITE PLAN

| | | | | | |
|---|---|---|---|---|---|
| CALC | | REVISED | DATE | FWAFB LAUNCH FACILITY<br>INTEGRATED CRITERIA<br>GROUNDING LOCATIONS | D2-14826 |
| CHECK | | | | | FIG. 5-4 |
| APR | | | | THE BOEING COMPANY | PAGE 13 |
| APR | | | | | |

## 6.0 SERVICE AREA AND ACCESS ROAD CRITERIA

### 6.10 SUMMARY OF CHANGES TO SECTION 6 FIGURES

6.10.1 Figure 6-7.4 deletes Security J-Box located near XMTR antenna and also the 2" c.o. extending between the Security J-Box and the S/R RCVR. A conduit is added between the Launcher and the S/R RCVR.

6.10.2 Figure 6-7.6 deletes Detail 1 and Section A of the Security J-Box.

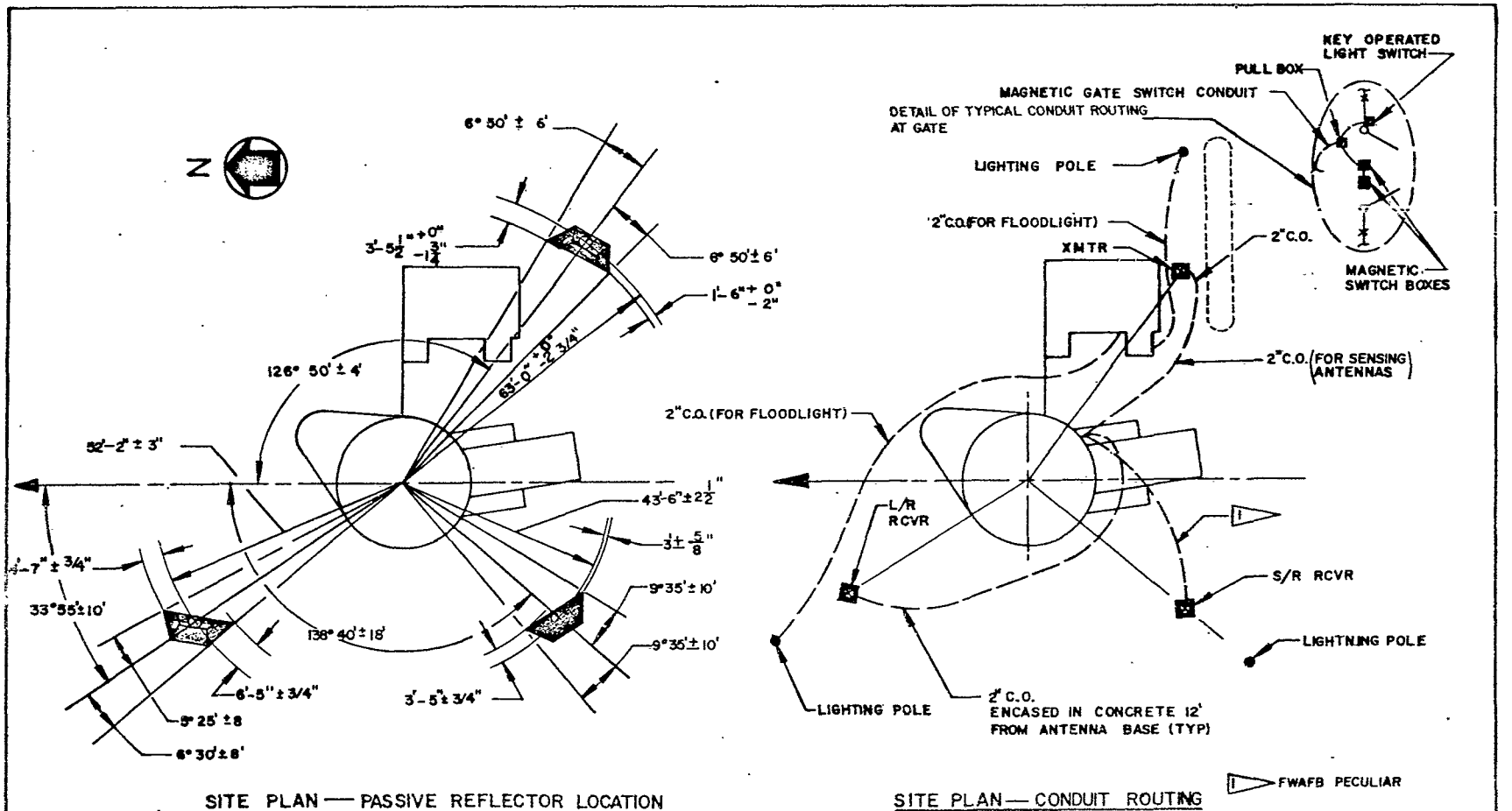


SITE PLAN — PASSIVE REFLECTOR LOCATION

SITE PLAN — CONDUIT ROUTING

| CALC | | REVISED | DATE | FWAFB LAUNCH FACILITY SERVICE AREA & ACCESS ROADS CONDUIT ROUTING & PASSIVE REFLECTOR LOCATION | D2-14825 |
|---|---|---|---|---|---|
| CHECK | | | | | FIG. 5-7.4 |
| APR | | | | THE BOEING COMPANY | PAGE 15 |
| APR | | | | | |

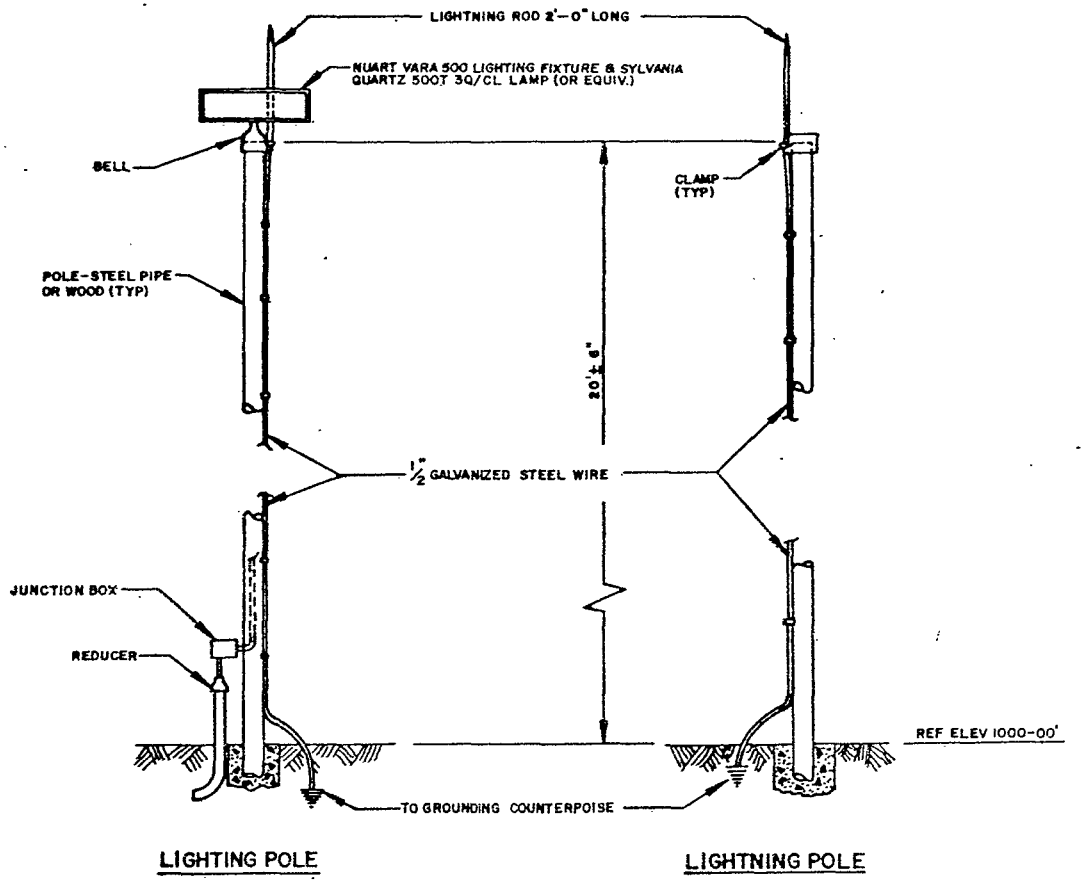


| | | | | | |
|---|---|---|---|---|---|
| CALC | | REVISED | DATE | FWAFB LAUNCH FACILITY<br>SERVICE AREA & ACCESS ROADS<br>SECURITY POLE & J-BOX DETAILS | D2-14826 |
| CHECK | | | | | FIG. 6-7.6 |
| APR | | | | THE BOEING COMPANY | PAGE 16 |
| APR | | | | | |

7.0 LAUNCHER SUPPORT BUILDING CRITERIA

7.7 SECURITY

Delete reference to "Security J-Box" in last sentence of paragraph. Sentence should read "An interface cabinet shall be installed, with provision for termination of all security system wiring herein, as shown in Figures 7-2.3 and 7-3".

7.8 SUMMARY OF CHANGES TO SECTION 7 FIGURES

7.8.1 Figure 7-1 indicates the change in size of hydraulic lines from $\frac{1}{4}$" to $\frac{1}{2}$", and relocates penetration of the 1" sump pump drain line.

7.8.2 Figure 7-1.1 shows relocation of 2" air relief line in Detail 1, and changes horizontal dimension from 5'-0" to 6" from fresh air intake to exterior surface of LSB wall in Section B.

7.8.3 Figure 7-2 indicates modifications to the electrical equipment layout in plan and section.

7.8.4 Figure 7-2.1 relocates the intrasite cable penetrations at the LSB exterior wall.

7.8.5 Figure 7-2.2 specifies the variations to the location of openings and J-boxes in the LSB shock mounted floor.

7.8.6 Figure 7-2.3 is added to show the switchboard panel elevation and necessary details.

7.8.7 Figure 7-3 shows the wiring connection schematic for the Interface Cabinet. In lieu of a separate Security Terminal Cabinet as used in Wing III, the necessary security terminals shall be incorporated in the Interface Cabinet for Wing V.

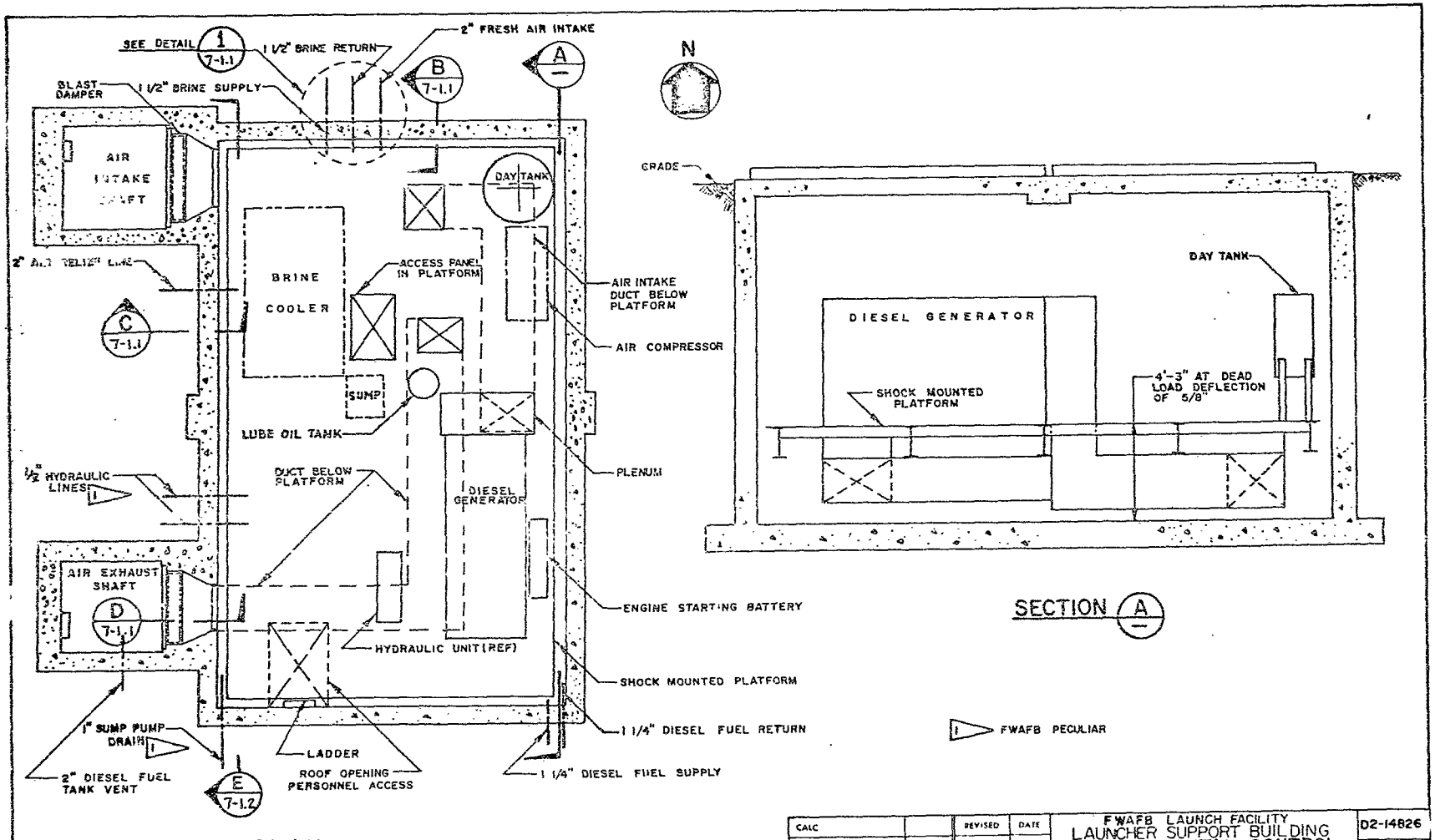


| CALC | | REVISED | DATE | FWAFB LAUNCH FACILITY LAUNCHER SUPPORT BUILDING ENVIRONMENTAL CONTROL EQUIPMENT | D2-14826 |
|---|---|---|---|---|---|
| CHECK | | | | | FIG. 7-1 |
| APR | | | | THE BOEING COMPANY | PAGE 18 |
| APR | | | | | |

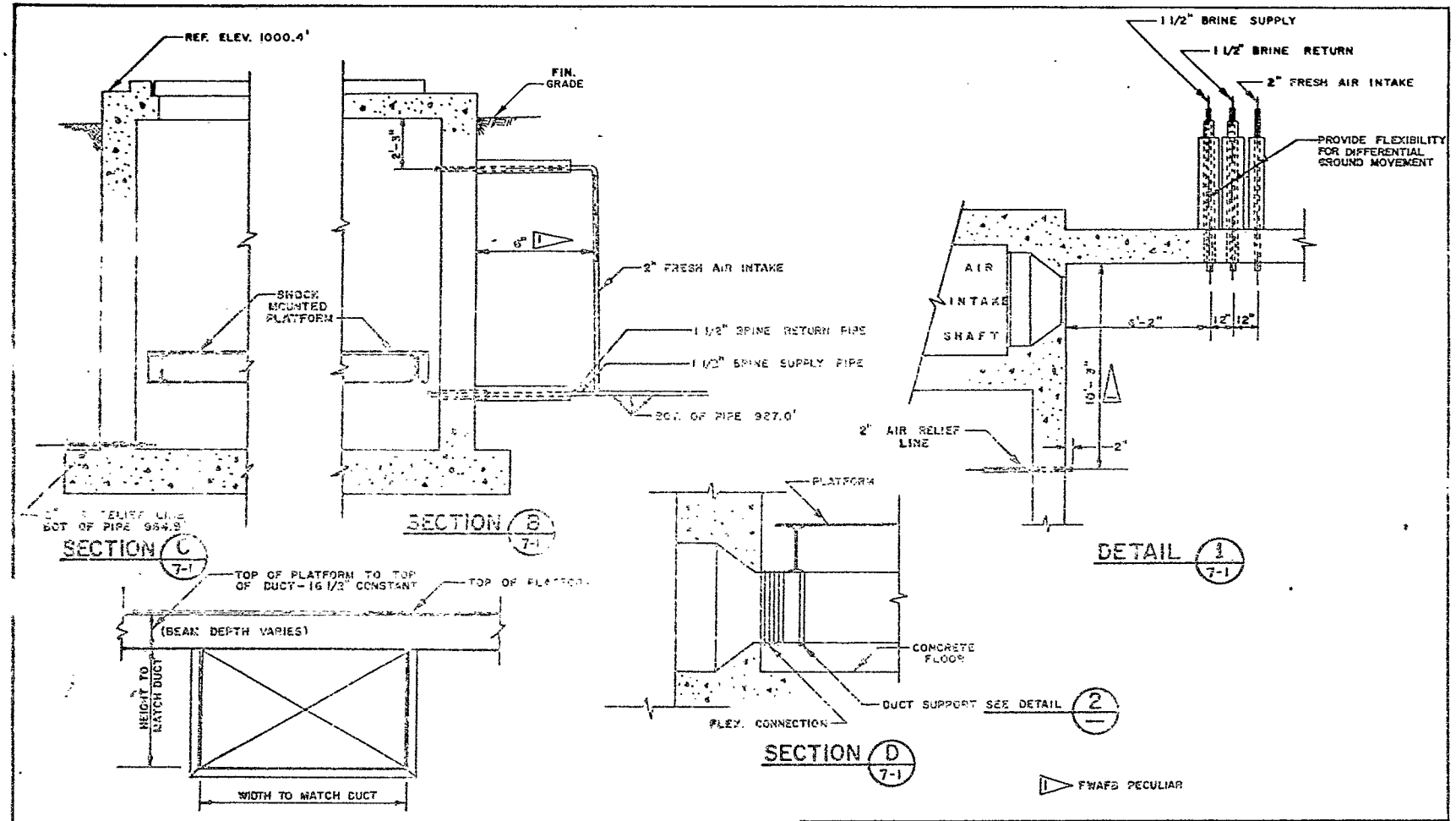


| CALC | | REVISED | DATE | FWAFB LAUNCH FACILITY LAUNCHER SUPPORT BUILDING ENVIRONMENTAL CONTROL EQUIP. SECTIONS & DETAILS | 02-14826 |
|---|---|---|---|---|---|
| CHECK | | | | | FIG. 7-1.1 |
| APR | | | | THE BOEING COMPANY | PAGE 19 |
| APR | | | | | |

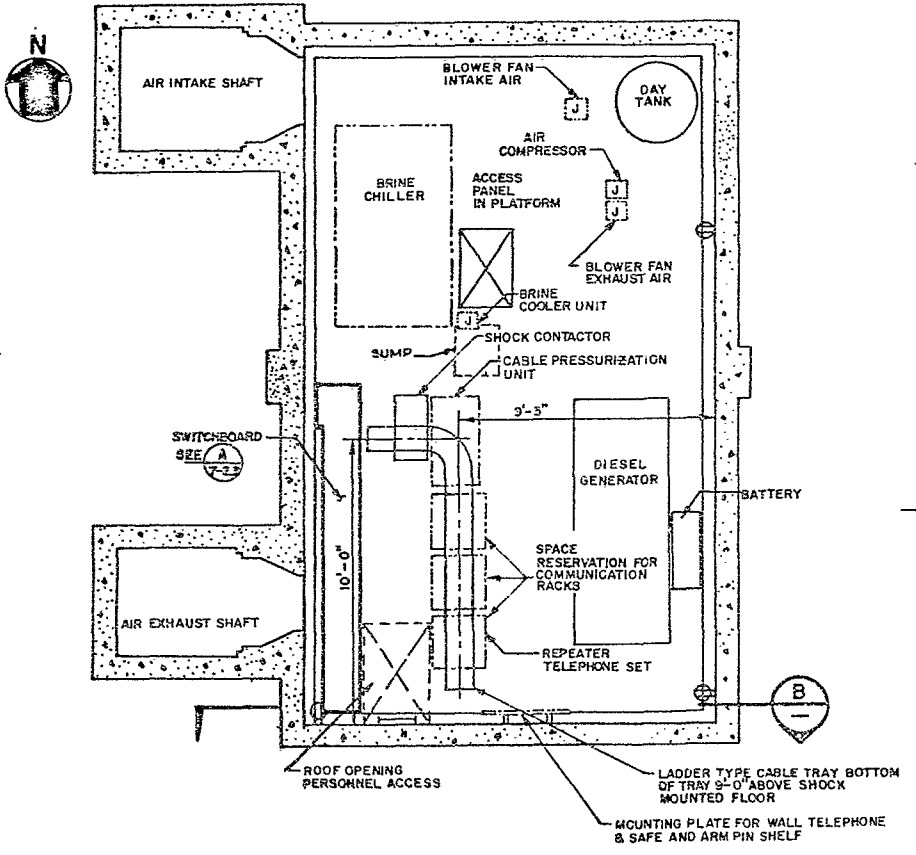


PLAN

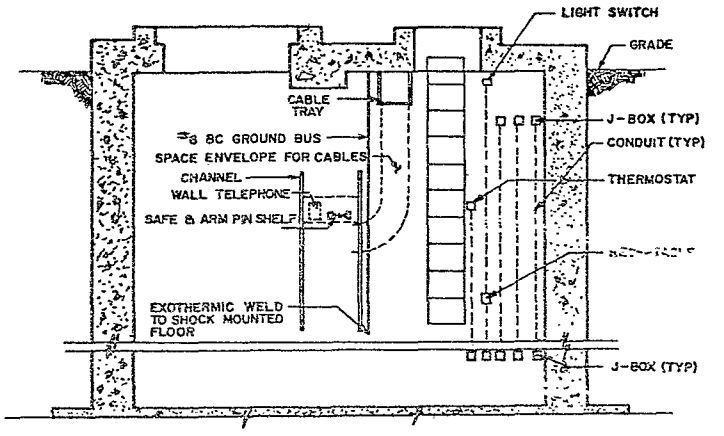


SECTION B

HUBBLE #5252 (20 AMP) 2 POLE, 3 WIRE, GROUNDED RECEPTACLE. 120 VOLT DUPLEX.

NOTE: FOR CONDUIT STUB-OUTS SEE FIG. 7-2.1
FOR LOCATION OF J-BOXES MOUNTED UNDERSIDE OF FLOOR SEE FIG 7-2.2

| | | REVISED | DATE | | |
|---|---|---|---|---|---|
| CALC | | | | FWAFB LAUNCH FACILITY | D2-14826 |
| CHECK | | | | LAUNCHER SUPPORT BUILDING | FIG 7-2 |
| AP3 | | | | ELECTRICAL EQUIPMENT | |
| AP2 | | | | THE BOEING COMPANY | PAGE 20 |

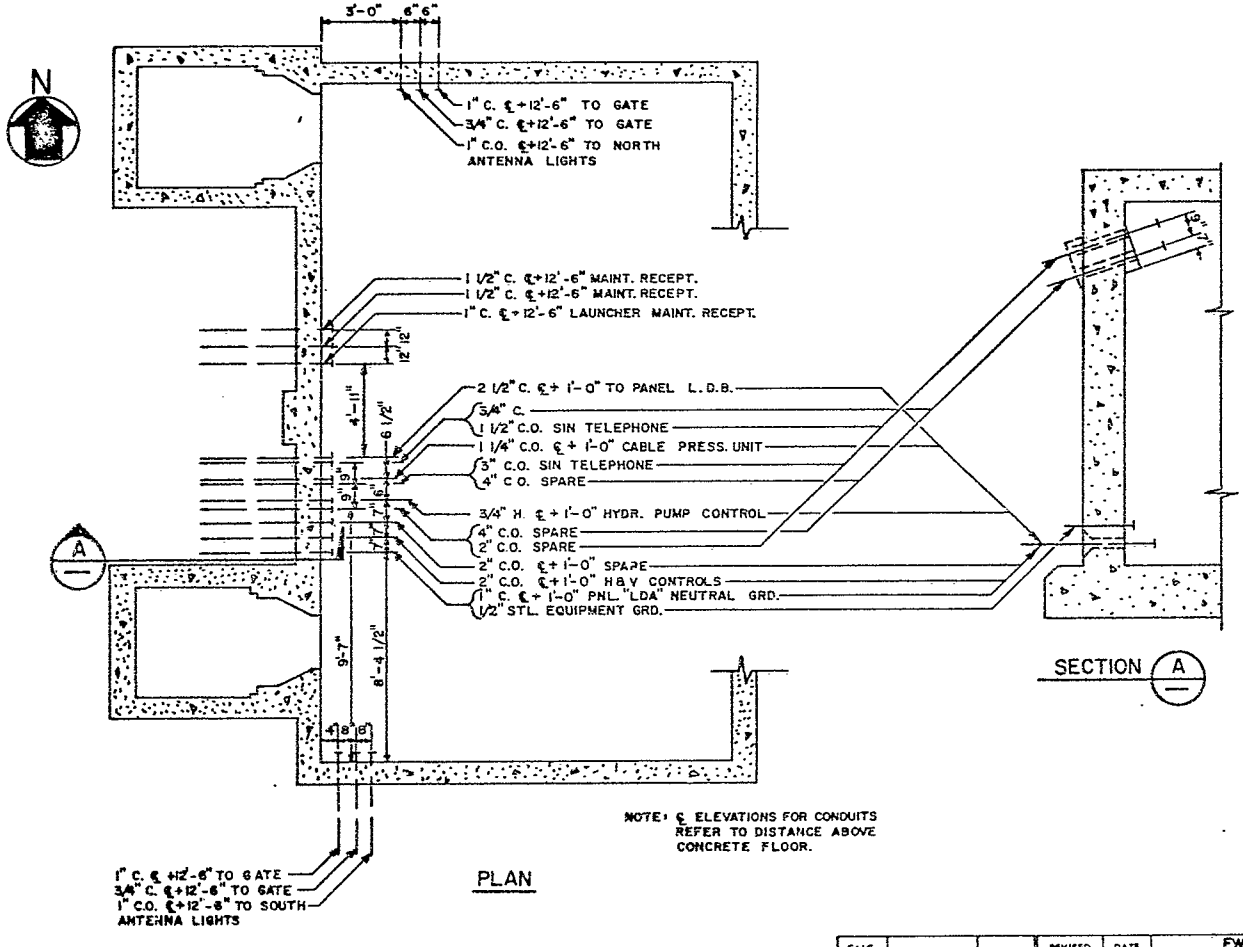


| CALC | | | REVISED | DATE | FWAFB LAUNCH FACILITY | D2-14826 |
|---|---|---|---|---|---|---|
| CHECK | | | | | LAUNCHER SUPPORT BUILDING | |
| APR | | | | | ELECTRICAL CONDUIT DETAILS | FIG. 7-2.1 |
| APR | | | | | THE BOEING COMPANY | PAGE 21 |

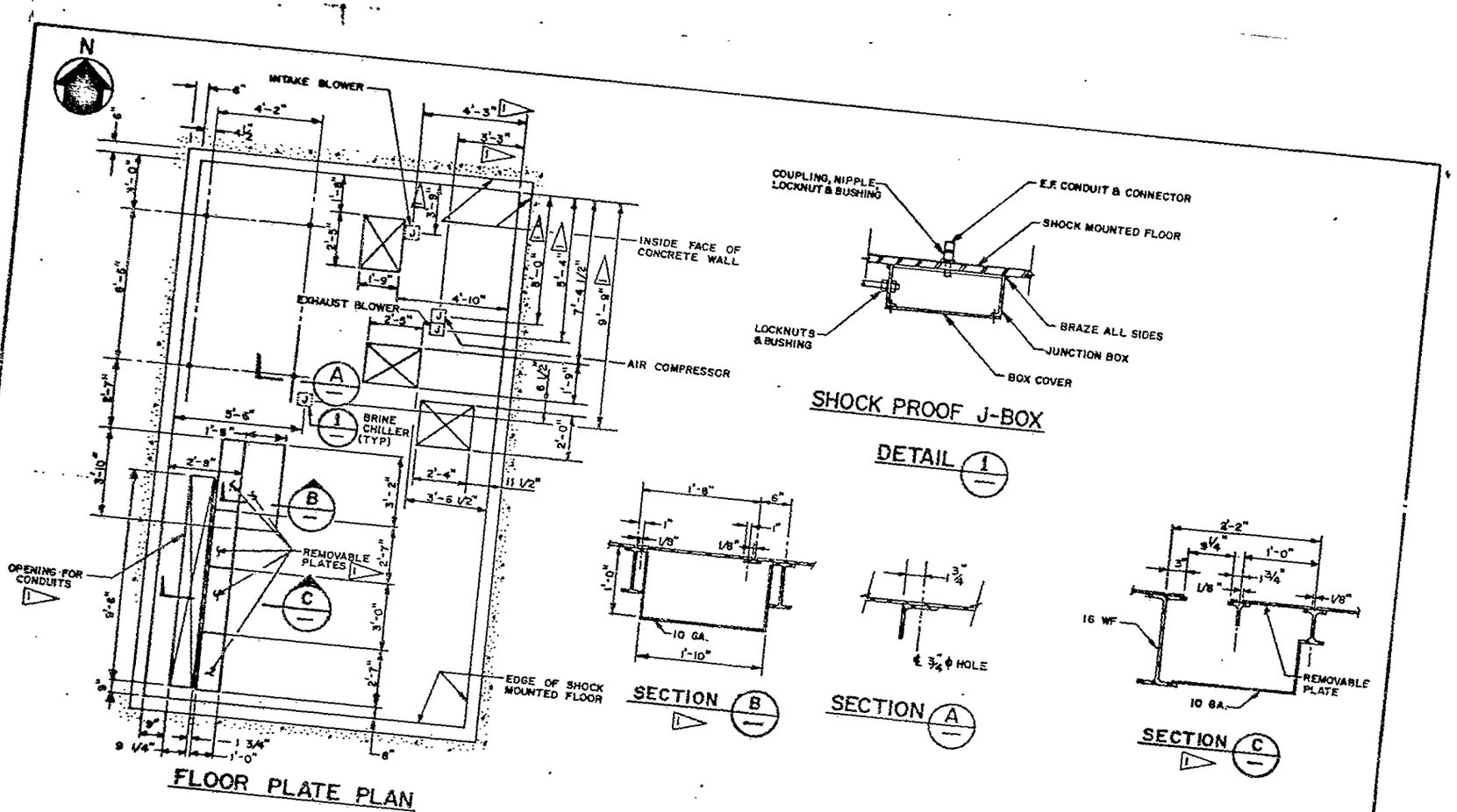


| | | | | | |
|---|---|---|---|---|---|
| CALC | | REVISED | DATE | FWAFB LAUNCH FACILITY<br>LAUNCHER SUPPORT BUILDING<br>PLATFORM OPENINGS FOR EQUIP. ATTACHMENT | D2-14826 |
| CHECK | | | | | FIG. 7-2.2 |
| APR | | | | THE BOEING COMPANY | PAGE 22 |
| APR | | | | | |

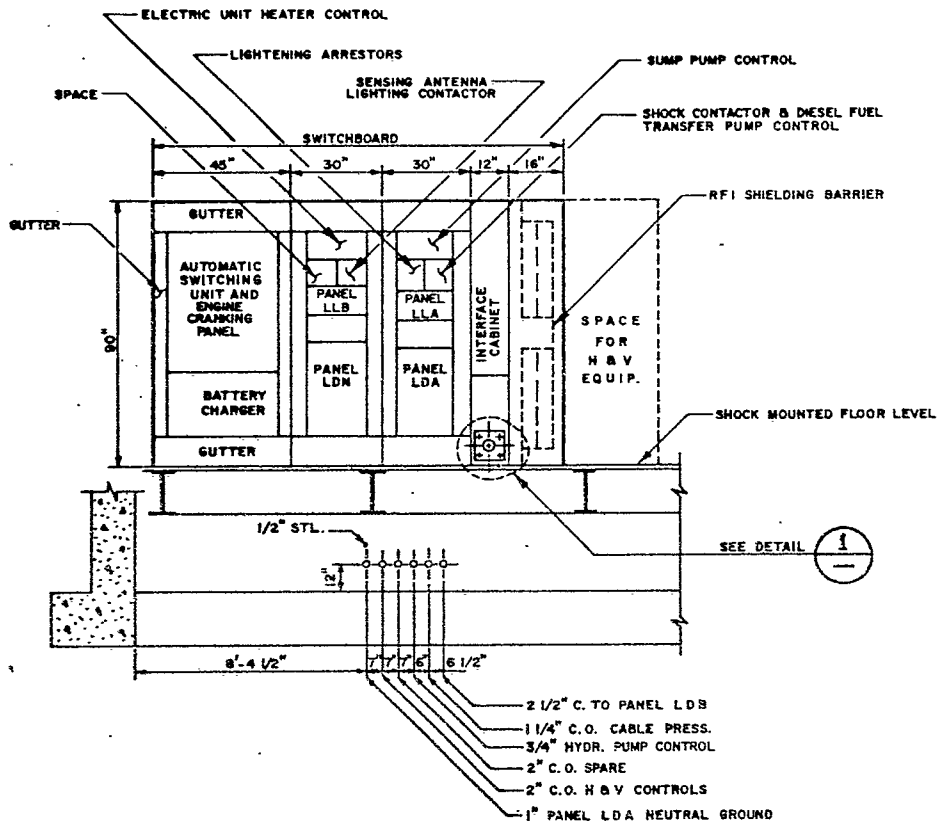


SECTION A / 7-2

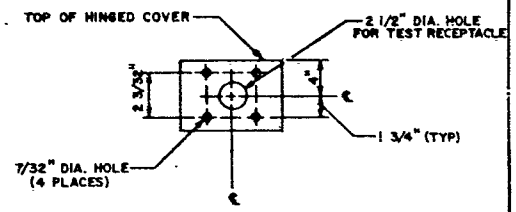


DETAIL 1

HOLES FOR TEST RECEPTACLE IN INTERFACE CABINET

| CALC | | | REVISED | DATE | FWAFB LAUNCH FACILITY<br>LAUNCHER SUPPORT BUILDING<br>**SWITCHBOARD ELEVATION** | D2-14826 |
|---|---|---|---|---|---|---|
| CHECK | | | | | | FIG. 7-2.3 |
| APR | | | | | | |
| APR | | | | | THE BOEING COMPANY | PAGE 23 |

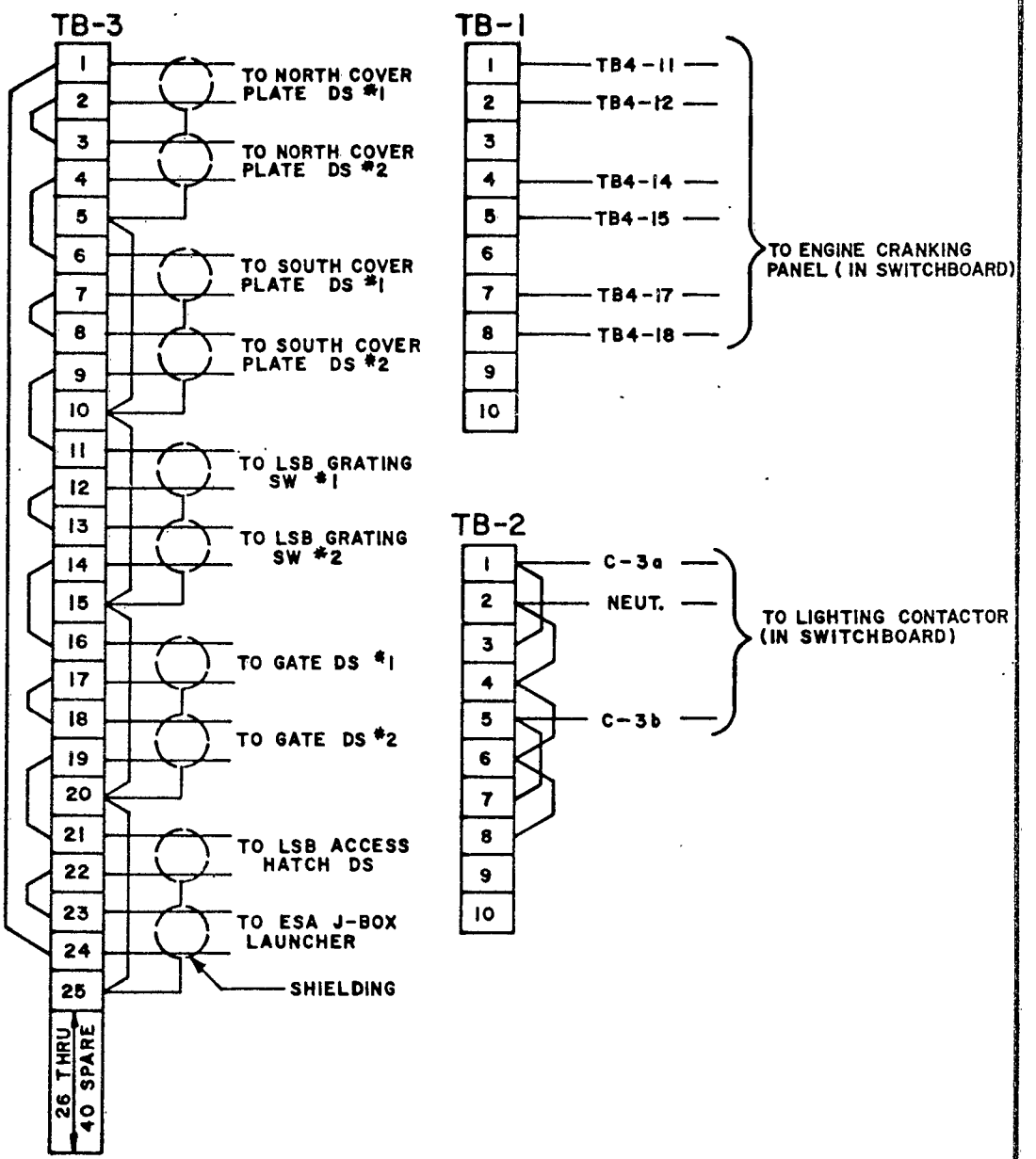


| | | | | | | |
|---|---|---|---|---|---|---|
| CALC | R.L.ORNESS | 5/30/3 | REVISED | DATE | FWAFB LAUNCH FACILITY<br>LAUNCHER SUPPORT BUILDING<br>INTERFACE CABINET<br>CONNECTION DIAGRAM | D2-14826 |
| CHECK | | | | | | FIG. 7-3 |
| APR | | | | | | |
| APR | | | | | THE BOEING COMPANY | PAGE 24 |

9.0 LAUNCHER EQUIPMENT ROOM CRITERIA

9.2.4 Sight Tube

Change dimension in Sentence "A Sight Tube, 24 inches maximum diameter ..." to read "A sight tube, 12 inches maximum inside diameter...".

9.8 SUMMARY OF CHANGES TO SECTION 9 FIGURES

9.8.1 Figure 9-1.4 changes configuration of stiffener plates at umbilical retraction unit, Detail 1.

9.8.2 Figure 9-1.6 shows changes to electrical conduit arrangement and conduit sizes at LER wall penetration.

9.8.3 Figure 9-1.7 shows interface change at brine supply and return lines, Section A; and indicates a change in requirements for conduit penetration of lines, Detail 2.

9.8.4 Figure 9-2 shows the Sight Tube inside diameter change from 24" to 12".

9.8.5 Figure 9-2.3 indicates the changes in stub-out locations and configuration of 4" copper plate grounding bus.

9.8.6 Figure 9-6 shows azimuth change from 168° to 166° for telephone jack mount location in the launch tube.

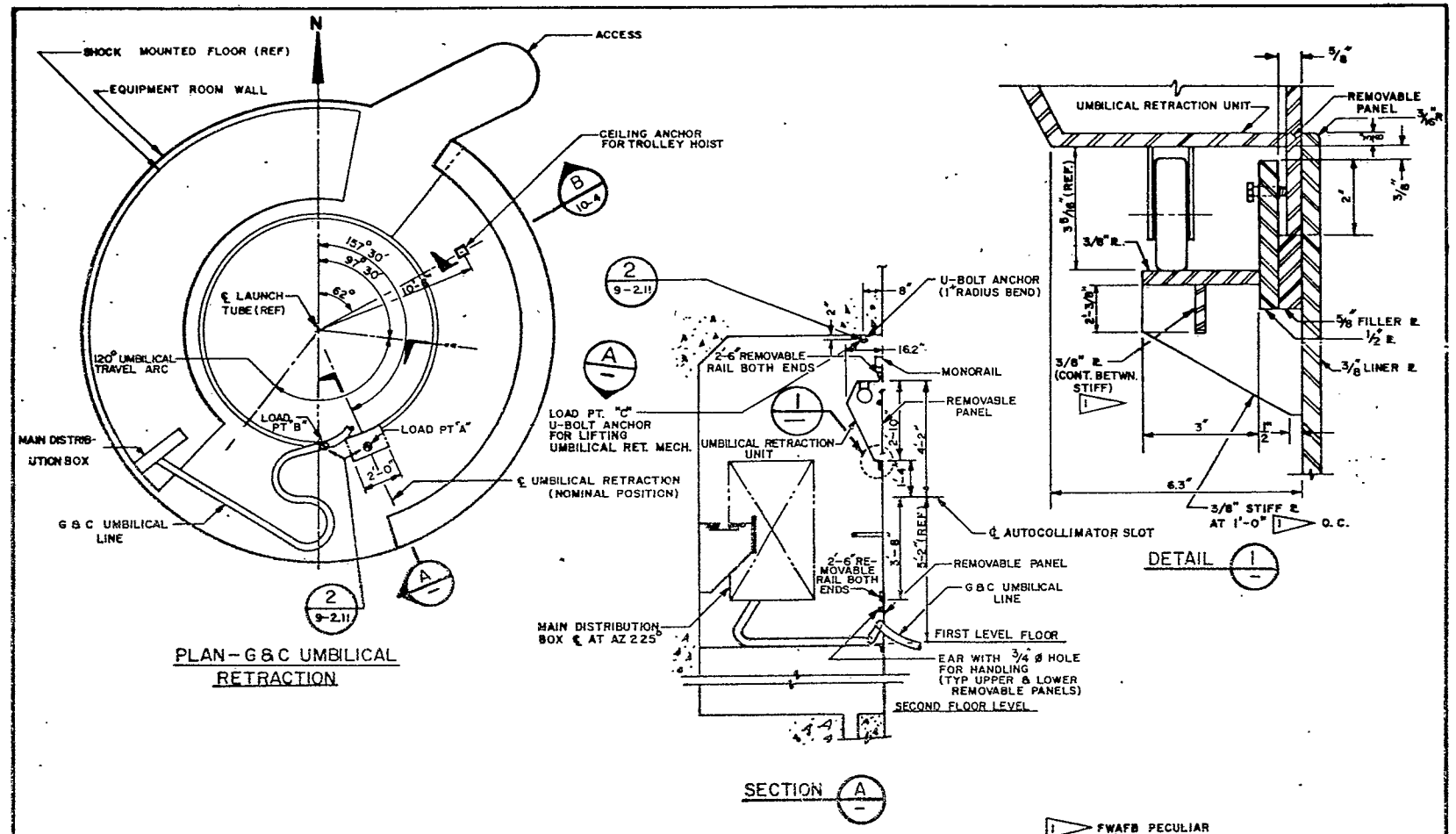


| | | | | | |
|---|---|---|---|---|---|
| CALC | | REVISED | DATE | MTAFB LAUNCH FACILITY | D2-14826 |
| CHECK | | | | LAUNCHER EQUIPMENT ROOM | |
| APR | | | | UMBILICAL RETRACT DETAILS | FIG 9-1.4 |
| APR | | | | THE BOEING COMPANY | PAGE 26 |

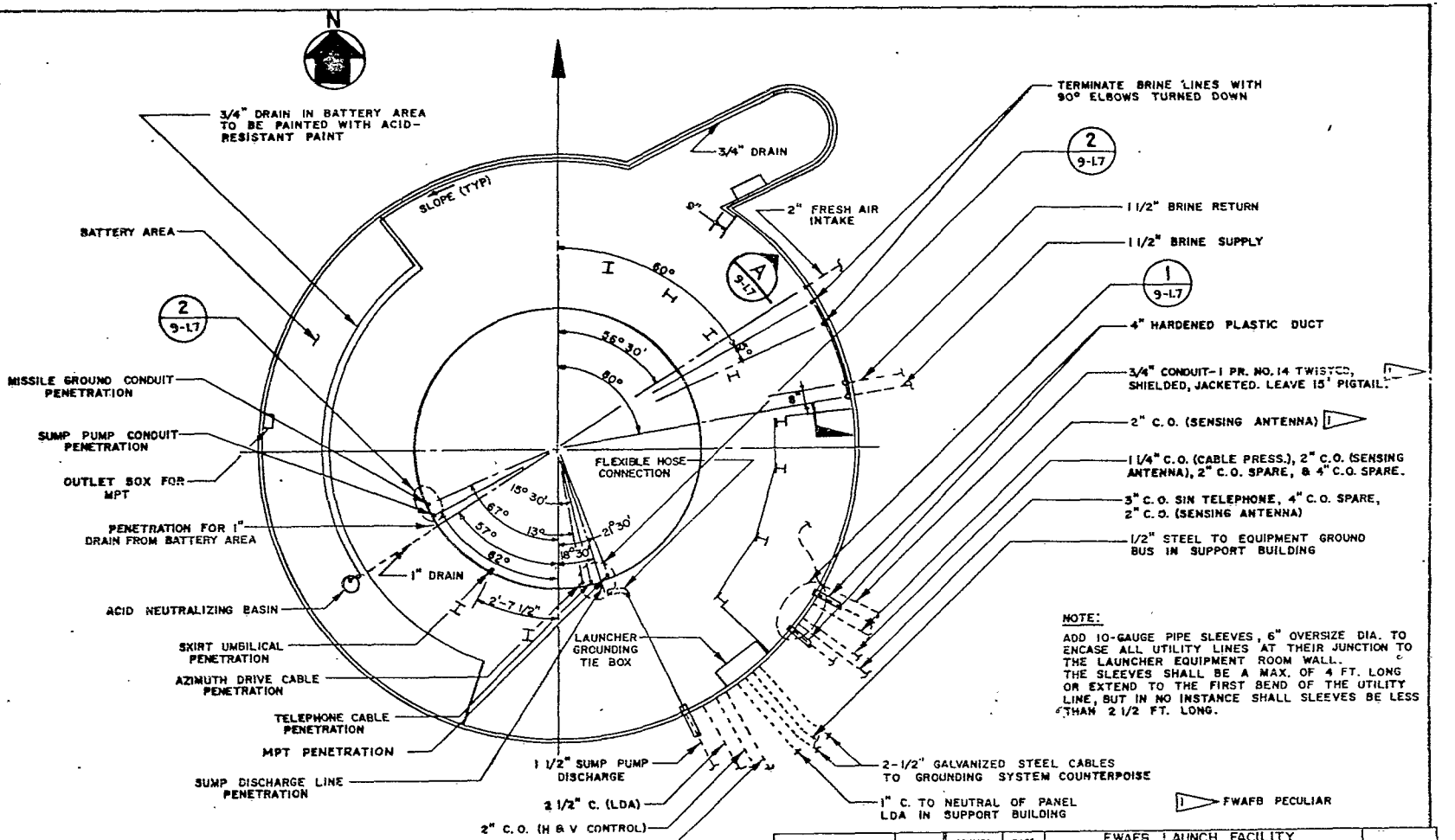


PLUMBING & ELECT. LAYOUT
SECOND LEVEL

| CALC | | REVISED | DATE | FWAFB LAUNCH FACILITY LAUNCHER EQUIPMENT ROOM SECOND LEVEL PLUMBING & ELECTRICAL LAYOUT | D2-14826 |
|---|---|---|---|---|---|
| CHECK | | | | | FIG 9-1.6 |
| APR | | | | THE BOEING COMPANY | PAGE 27 |
| APR | | | | | |

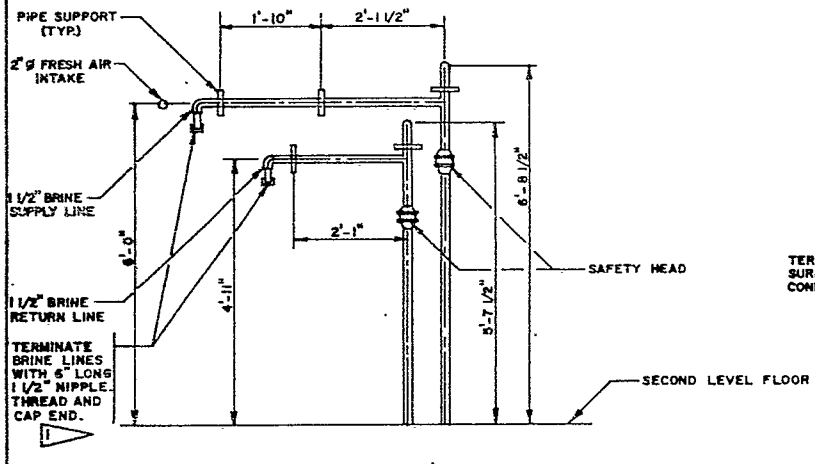


SECTION A 9-1.6

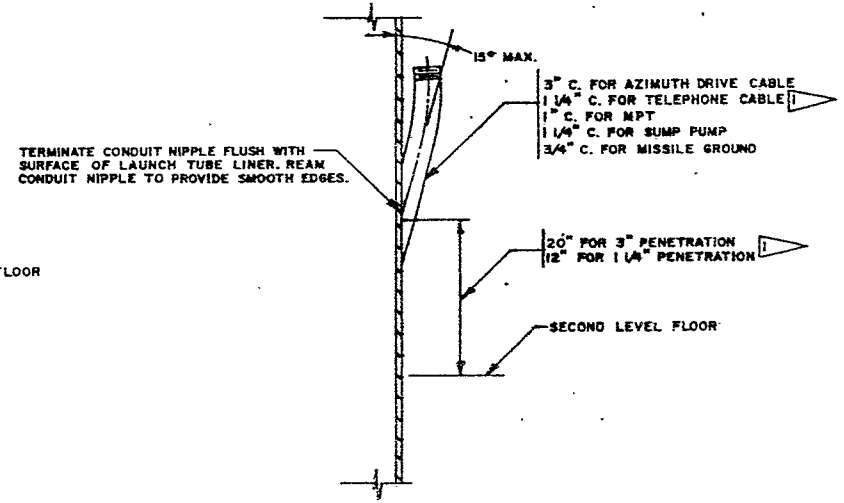


DETAIL 2 9-1.6

TYPICAL LAUNCH TUBE LINER PENETRATION

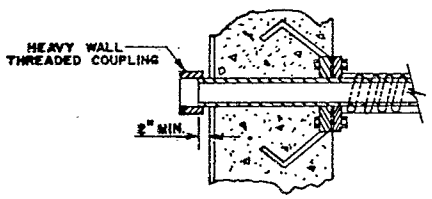


DETAIL 1 9-1.6

TYPICAL HARDENED CABLE PENETRATION

1 FWAFB PECULIAR

| CALC | | | REVISED | DATE | FWAFB LAUNCH FACILITY LAUNCHER EQUIPMENT ROOM PIPE SECTION & DETAILS | D2-14826 |
|---|---|---|---|---|---|---|
| CHECK | | | | | | FIG. 9-1.7 |
| APR | | | | | | |
| APR | | | | | THE BOEING COMPANY | PAGE 28 |

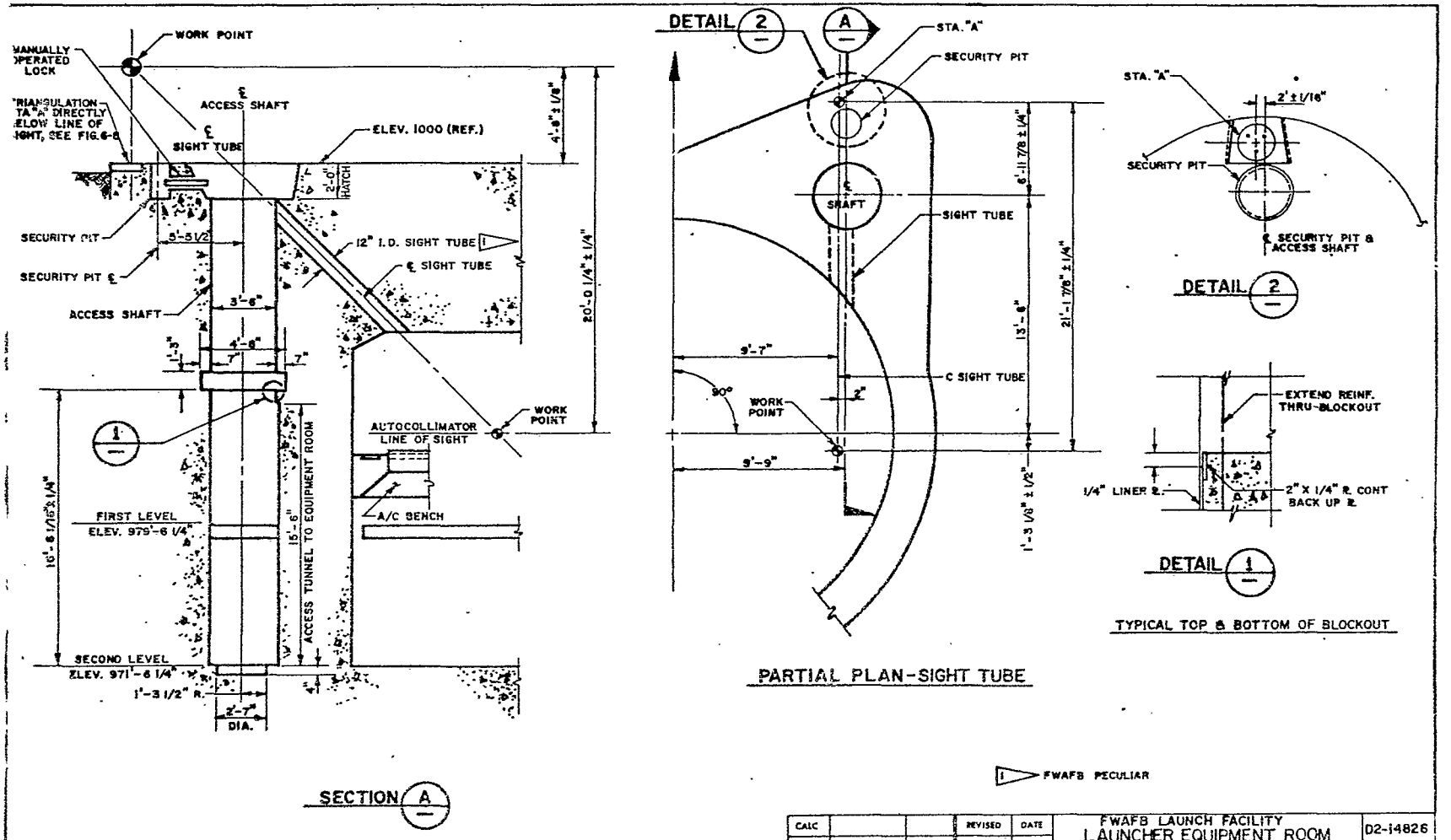


| CALC | | | REVISED | DATE | FWAFB LAUNCH FACILITY LAUNCHER EQUIPMENT ROOM PERSONNEL ACCESS SYSTEM & SIGHT TUBE | D2-14826 |
|---|---|---|---|---|---|---|
| CHECK | | | | | | FIG. 9-2 |
| APR | | | | | THE BOEING COMPANY | PAGE 29 |
| APR | | | | | | |

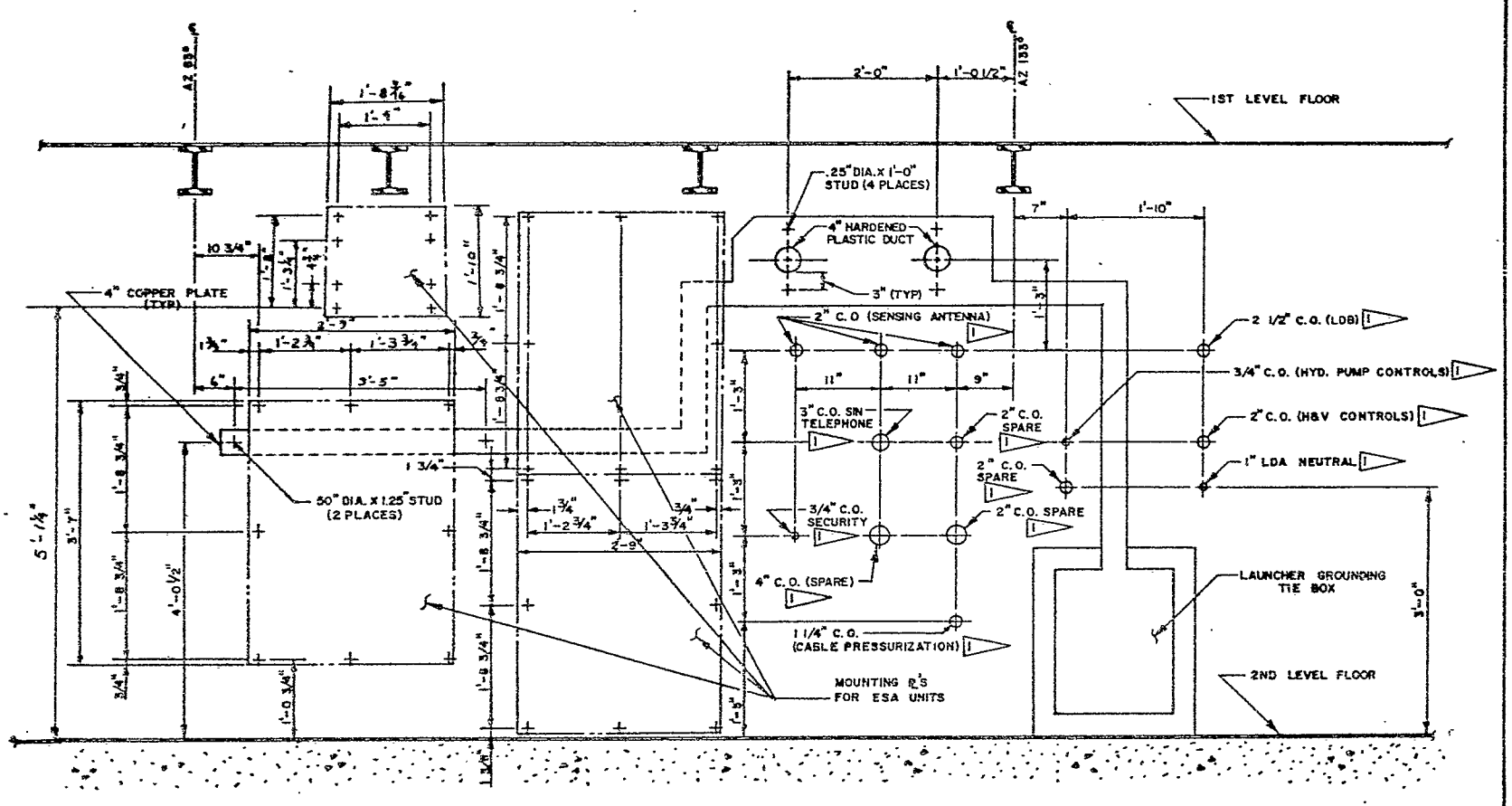


SECTION 8 / 9-2.2

| CALC | | REVISED | DATE | FWAFB LAUNCH FACILITY LAUNCHER EQUIPMENT ROOM DEVELOPED VIEW OF CPF ENCLOSURE | D2-14826 |
|---|---|---|---|---|---|
| CHECK | | | | | FIG. 9.23 |
| APR | | | | THE BOEING COMPANY | PAGE 50 |
| APR | | | | | |

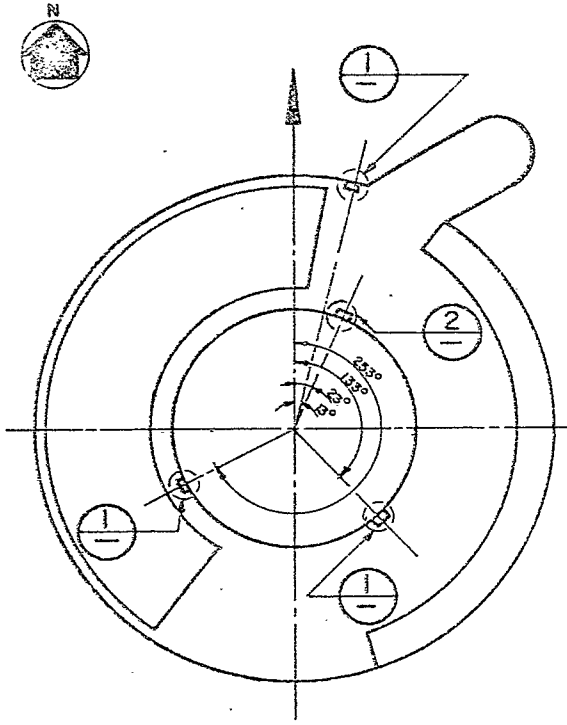


PLAN—FIRST LEVEL

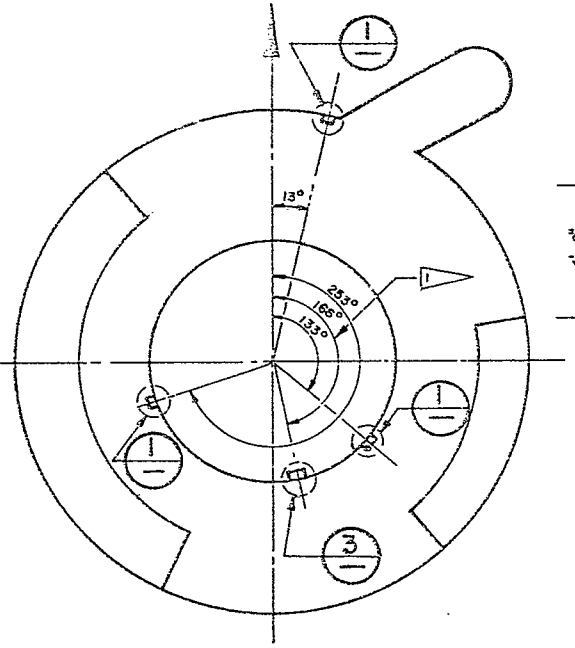


PLAN—SECOND LEVEL
(EXCEPT AT DETAIL 3)

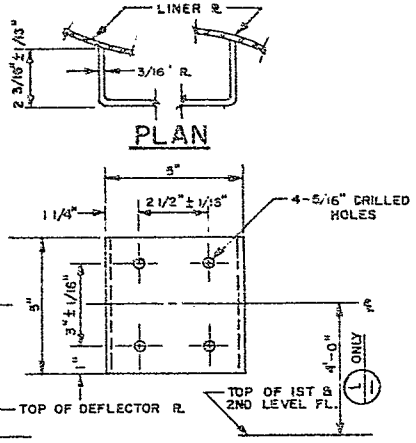


DETAIL 1 AND 3

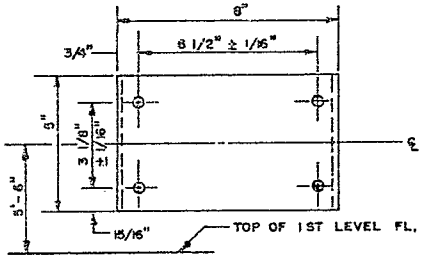


DETAIL 2

1 FWAFB PECULIAR

| | | | | | | |
|---|---|---|---|---|---|---|
| CALC | | | REVISED | DATE | FWAFB LAUNCH FACILITY<br>LAUNCHER EQUIPMENT ROOM<br>TELEPHONE JACK MOUNTING<br>THE BOEING COMPANY | D2-14826 |
| CHECK | | | | | | FIG. 9-6 |
| APR | | | | | | PAGE 31 |
| APR | | | | | | |

10.0 LAUNCH TUBE CRITERIA

10.2.1 Layout

Item b, change dimension in statement "length from flame deflector to the Autocollimator line-of-sight: 65'-2" "to read "75'-2"."

10.8 SUMMARY OF CHANGES TO SECTION 10 FIGURES

10.8.1 Figure 10-1 indicates the change in Launch Tube length measured from bottom of Closure to top of deflector plate from 77'-0" to 87'-0"; and adds the 10'-0" allowance for missile growth.

10.8.2 Figure 10-3 deletes the 14'-0" dimension from deflector plate to centerline of sump pump discharge line horizontal run; and indicates embedment and modification to layout of sump pump discharge line and battery drain line. Dimensional changes are shown from deflector plate to MPT J-Boxes.

10.8.3 Figure 10-3.1 deletes Detail 1 showing minimum attachment and proximity relationships between MPT J-Box and sump pump discharge line; and shows requirement for embedding sump pump discharge line in launch tube wall.

10.8.4 Figure 10-4. Details of typical butt joint in monorail track are changed to show increased "faired to match" requirement from $2\frac{1}{2}$" to 4".

10.8.5 Figure 10-6 shows increased dimension range from deflector plate to load point at upper missile support plate from "20'-3" to 26'-3"" to "30'-3" to 36'-2"."

10.8.6 Figure 10-6.1 modifies dimension from deflector plate to top of upper support plate from 29'-1" to 39'-1". At Section A the dimension from centerline to outside edge of upper support plate is changed from 1'-0" to 1'-0 5/16".

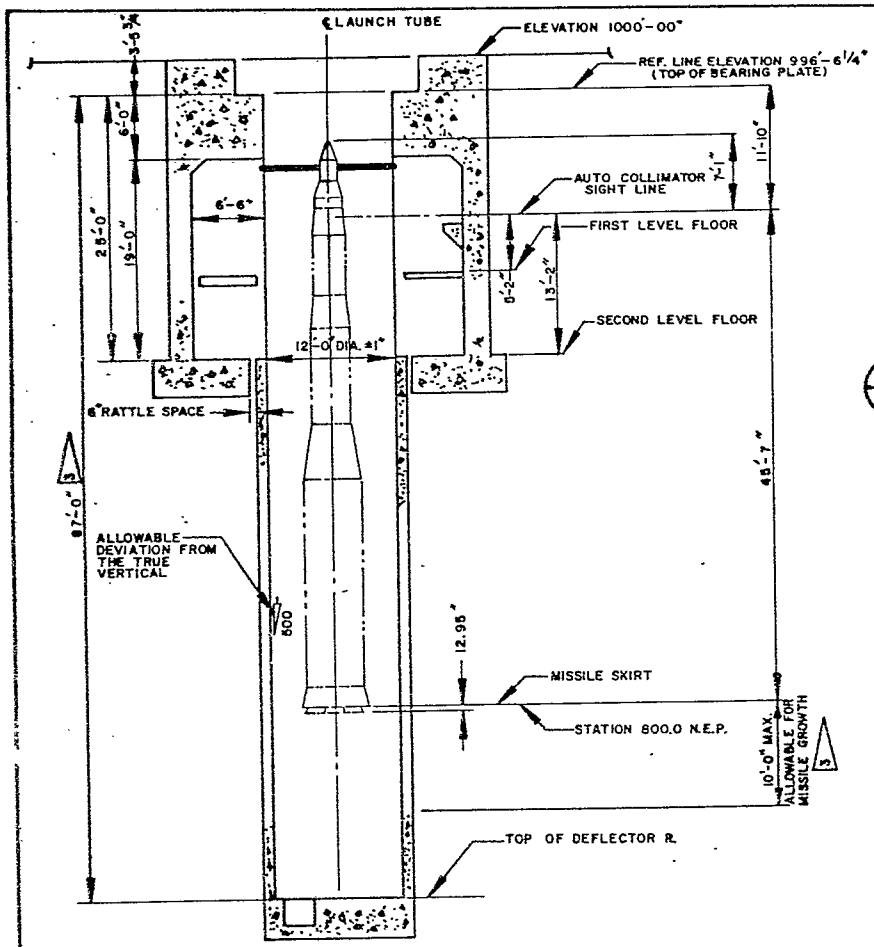


SECTION A

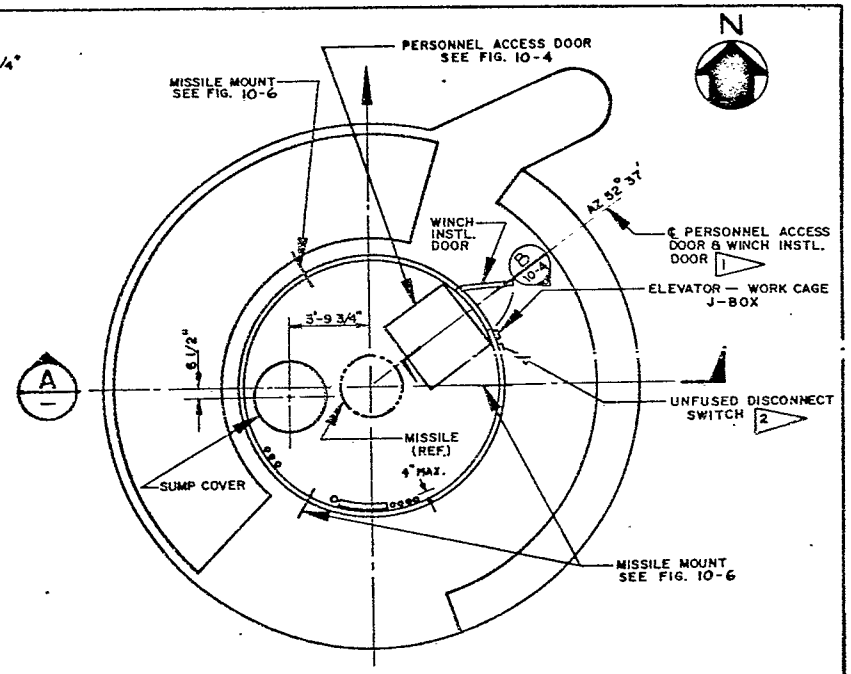


PLAN VIEW-LAUNCHER

3 FWAFB PECULIAR

2 MOUNTED AT THE HOIST INSTL. DOOR AND LINKED TO THE DOOR SO THAT WHEN THE DOOR IS OPENED THE SWITCH IS OPENED. THE OPENING LINK SHOULD PERMIT DOOR TO CLOSE WITHOUT CLOSING SWITCH. SWITCH CLOSING WILL REQUIRE MANUAL OPERATIONS.

1 LOCATE WINCH INSTL. DOOR AS NEARLY OVER MAIN ACCESS DOOR AS POSSIBILE.

| | | | | | |
|---|---|---|---|---|---|
| CALC | | REVISED | DATE | FWAFB LAUNCH FACILITY<br>LAUNCH TUBE<br>PLAN & SECTION | D2-14826 |
| CHECK | | | | | FIG. 10-1 |
| APR | | | | | |
| APR | | | | THE BOEING COMPANY | PAGE 33 |

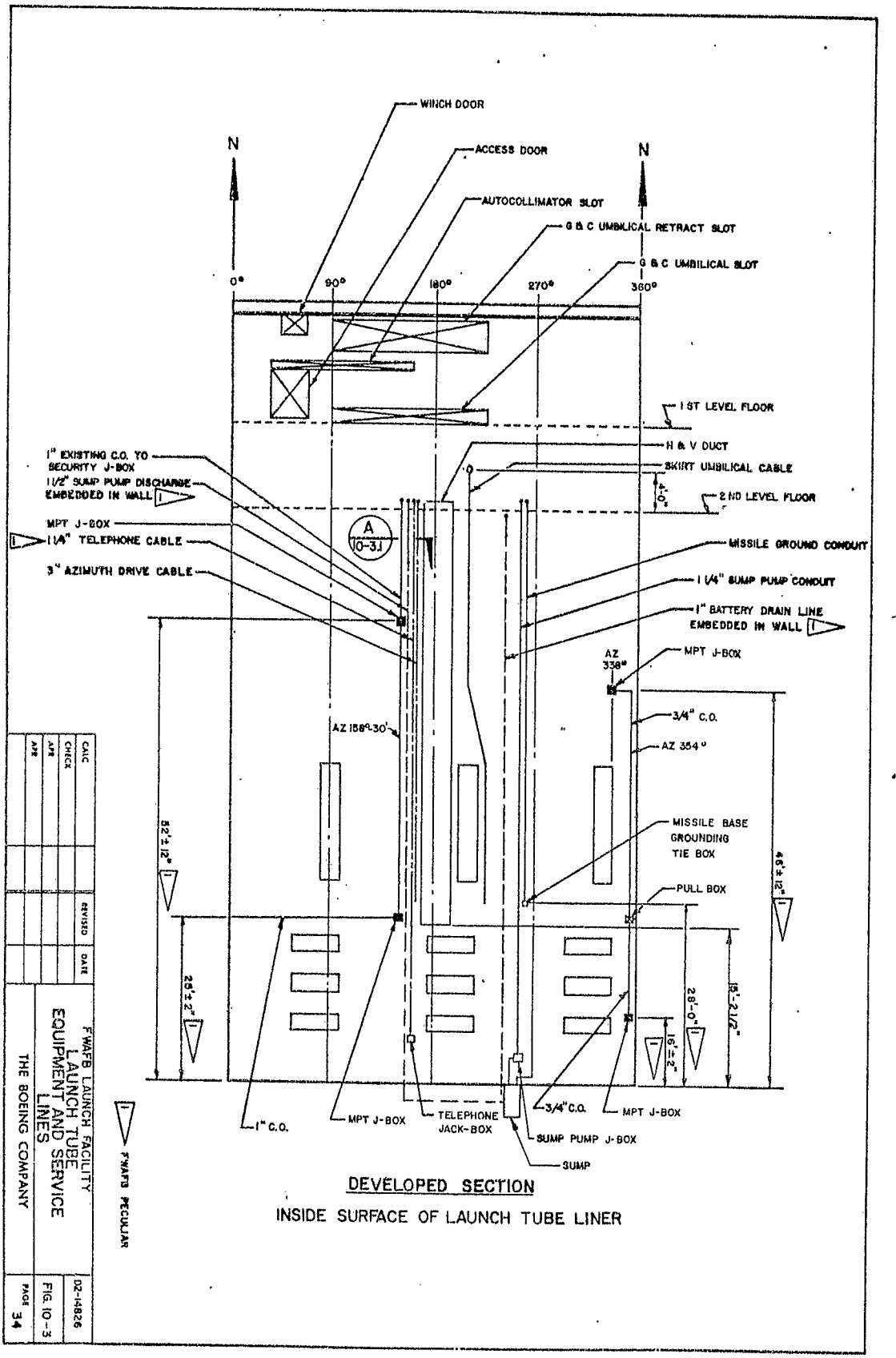


DEVELOPED SECTION

INSIDE SURFACE OF LAUNCH TUBE LINER

| | | | |
|---|---|---|---|
| CALC | | | |
| CHECK | | REVISED | |
| APR | | DATE | |
| APR | | | |

F'WAFB LAUNCH FACILITY
LAUNCH TUBE EQUIPMENT AND SERVICE LINES
THE BOEING COMPANY

D2-14826
FIG. 10-3
PAGE 34

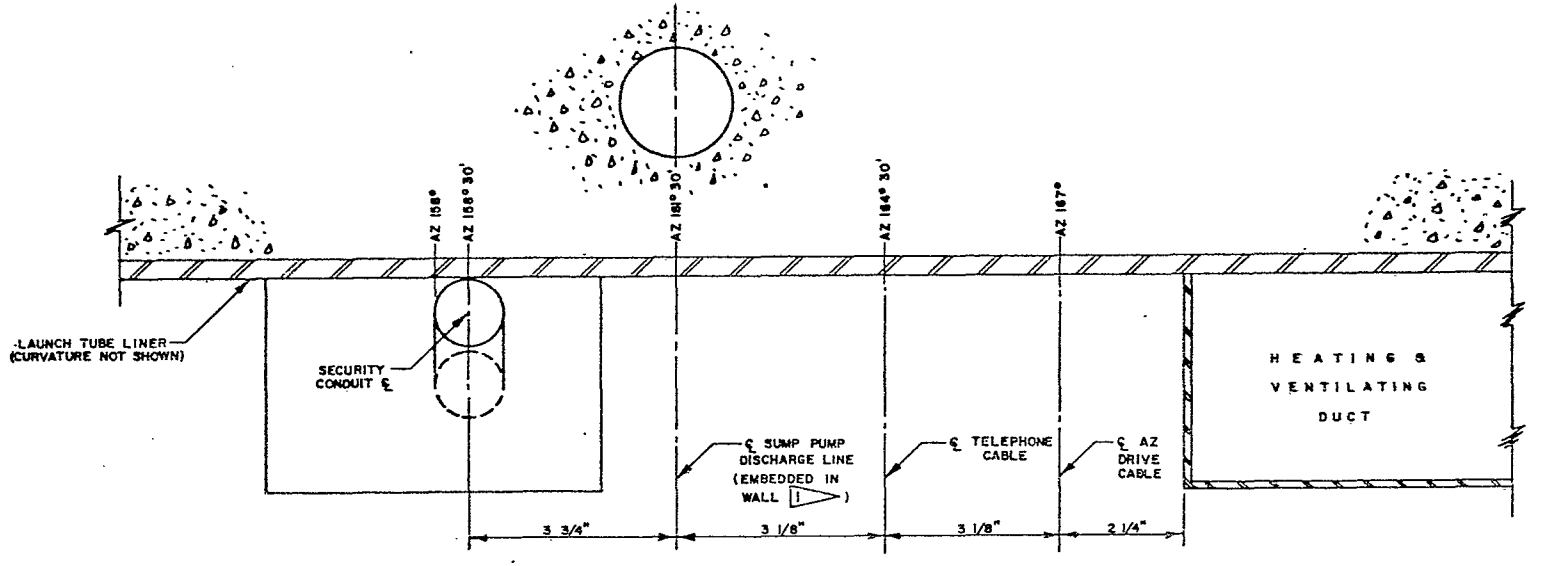


SECTION A / 10-3

1 FWAFB PECULIAR

| | | | | | | |
|---|---|---|---|---|---|---|
| CALC | | | REVISED | DATE | FWAFB LAUNCH FACILITY<br>LAUNCH TUBE<br>LOCATION OF SERVICE LINES | D2-14826 |
| CHECK | | | | | | FIG. 10-3.1 |
| APR | | | | | THE BOEING COMPANY | PAGE 35 |
| APR | | | | | | |

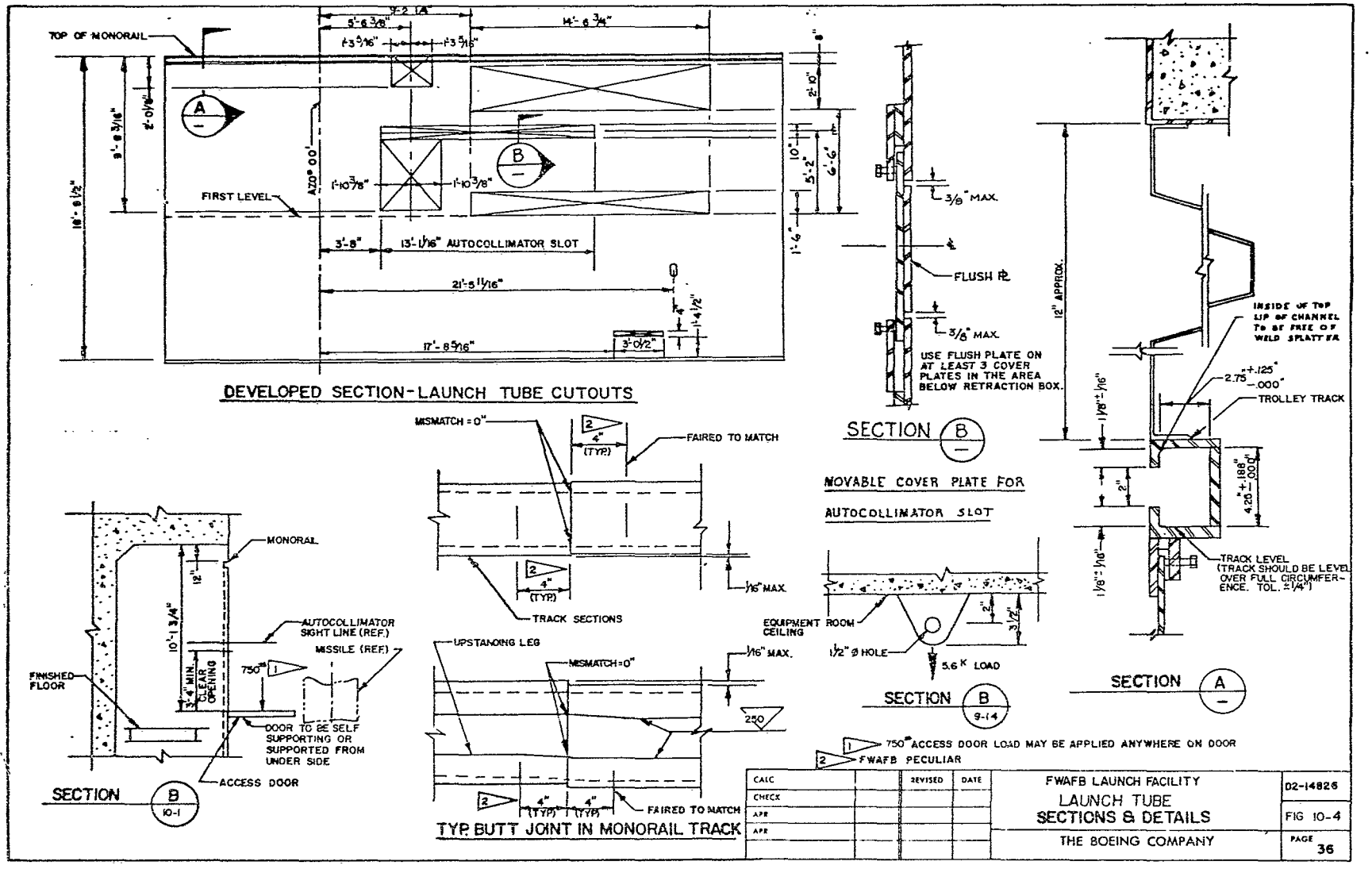
TOP OF MONORAIL
FIRST LEVEL
13'-1 1/16" AUTOCOLLIMATOR SLOT
DEVELOPED SECTION-LAUNCH TUBE CUTOUTS
3/8" MAX.
FLUSH PL
USE FLUSH PLATE ON AT LEAST 3 COVER PLATES IN THE AREA BELOW RETRACTION BOX.
SECTION B
MOVABLE COVER PLATE FOR AUTOCOLLIMATOR SLOT
12" APPROX.
INSIDE OF TOP LIP OF CHANNEL TO BE FREE OF WELD SPLATTER
TROLLEY TRACK
TRACK LEVEL (TRACK SHOULD BE LEVEL OVER FULL CIRCUMFERENCE. TOL. ±1/4")
SECTION A
MISMATCH = 0"
FAIRED TO MATCH
TRACK SECTIONS
1/16" MAX.
EQUIPMENT ROOM CEILING
1 1/2" Ø HOLE
5.6 K LOAD
SECTION B 9-14
MONORAIL
AUTOCOLLIMATOR SIGHT LINE (REF.)
MISSILE (REF.)
FINISHED FLOOR
3'-4" MIN. CLEAR OPENING
DOOR TO BE SELF SUPPORTING OR SUPPORTED FROM UNDER SIDE
ACCESS DOOR
SECTION B 10-1
UPSTANDING LEG
MISMATCH=0"
FAIRED TO MATCH
TYP. BUTT JOINT IN MONORAIL TRACK
750# ACCESS DOOR LOAD MAY BE APPLIED ANYWHERE ON DOOR
FWAFB PECULIAR
CALC
CHECK
APR
APR
REVISED
DATE
FWAFB LAUNCH FACILITY
LAUNCH TUBE
SECTIONS & DETAILS
THE BOEING COMPANY
D2-14826
FIG 10-4
PAGE 36

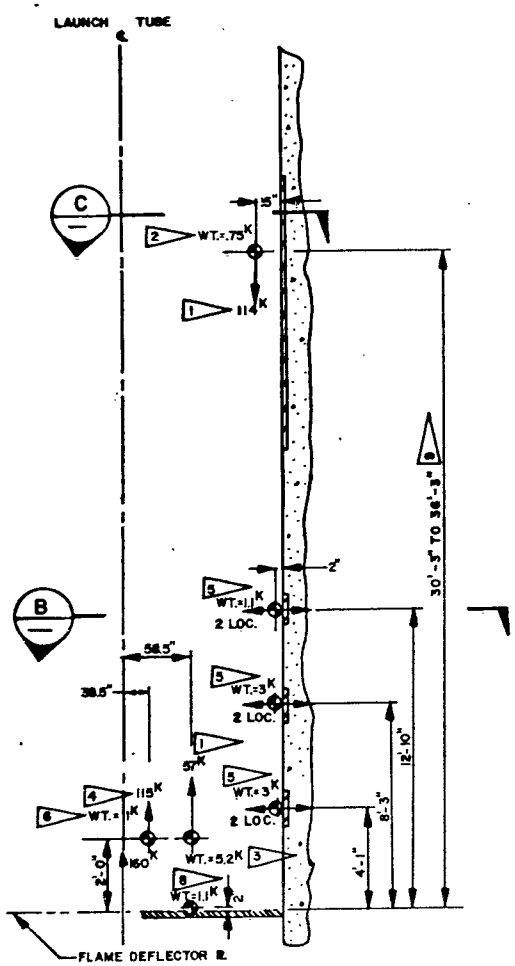


TYPICAL SECTION AT LOAD POINTS

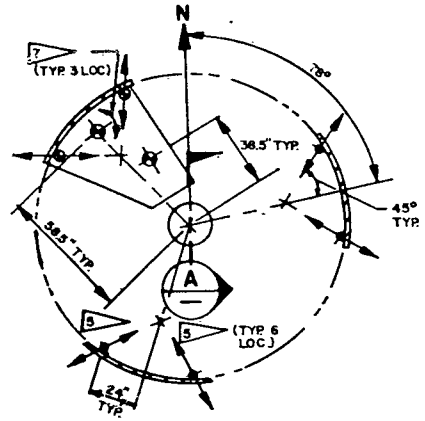


SECTION B

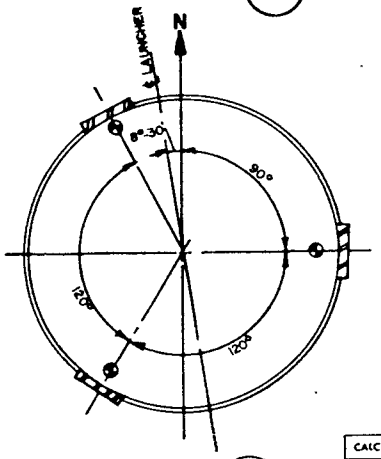


SECTION C

1 FORCE DUE TO 2 G LOAD ON MISSILE & MOUNT.

2 FORCE DUE TO GROUND SHOCK ON HARDWARE = WT. X 30 LOAD MAY ACT IN ANY HORIZONTAL OR VERTICAL DIRECTION, EITHER SIMULTANEOUSLY OR INDEPENDENTLY WHICH EVER IS MORE SEVERE AND SHALL BE COMBINED WITH VERTICAL LOAD FROM 1

3 FORCE DUE TO GROUND SHOCK ON HARDWARE = WT. X 30 LOAD MAY ACT IN VERTICAL DIRECTION ONLY THRU C.G. SIMULTANEOUSLY WITH LOAD FROM 1

4 MAXIMUM ACTUAL LOAD DUE TO SNUBBING DURING FLYOUT. DOES NOT OCCUR WITH OTHER LOADS SHOWN.

5 FORCE DUE TO GROUND SHOCK ON HARDWARE = WT. X 30 LOAD MAY ACT IN EITHER DIRECTION OF ARROW ONLY THRU C.G.

6 FORCE DUE TO GROUND SHOCK ON HARDWARE = WT. X 30 LOAD MAY ACT IN ANY HORIZONTAL OR VERTICAL DIRECTION EITHER SIMULTANEOUSLY OR INDEPENDENTLY WHICHEVER IS MORE SEVER. GROUND SHOCK LOAD DOES NOT COMBINE WITH LOAD FROM 4

7 190 K-IN. TORQUE AT FLOOR LEVEL ACTING WITH 57 KIP MISSILE LOAD AND LOAD FROM 5 & 6

8 FORCE DUE TO GROUND SHOCK ON HARDWARE = WT. X 30. LOAD MAY ACT IN ANY HORIZONTAL DIRECTION ONLY THRU C.G.

1 2 3 5 6 7 8 LOADS MAY ACT SEPARATELY OR SIMULTANEOUSLY WHICHEVER IS MORE SEVERE.

9 FWAFB PECULIAR

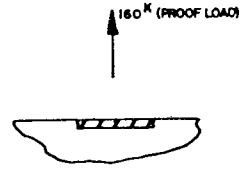


SECTION A

| | | | | | |
|---|---|---|---|---|---|
| CALC | | REVISED | DATE | FWAFB LAUNCH FACILITY<br>LAUNCH TUBE<br>MISSILE SUPPORT LOADS | 02-14826 |
| CHECK | | | | | FIG. 10-6 |
| APR | | | | | |
| APR | | | | THE BOEING COMPANY | PAGE 37 |

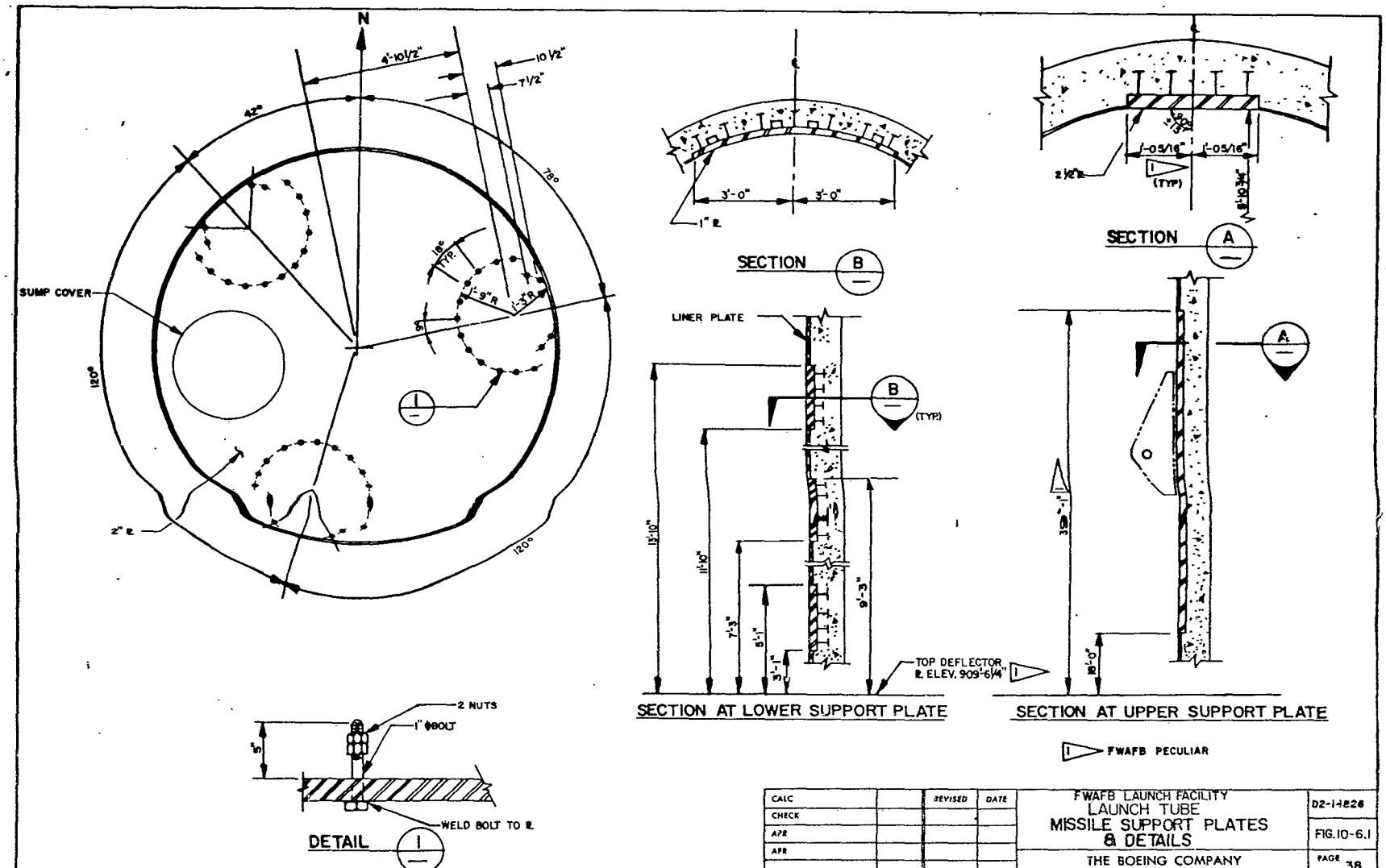


| CALC | | REVISED | DATE | FWAFB LAUNCH FACILITY<br>LAUNCH TUBE<br>MISSILE SUPPORT PLATES<br>& DETAILS | D2-14826 |
|---|---|---|---|---|---|
| CHECK | | | | | FIG. 10-6.1 |
| APR | | | | | |
| APR | | | | THE BOEING COMPANY | PAGE 38 |