UNCLASSIFIED

AD 414572

DEFENSE DOCUMENTATION CENTER

FOR

SCIENTIFIC AND TECHNICAL INFORMATION

CAMERON STATION, ALEXANDRIA, VIRGINIA

UNCLASSIFIED

DISCLAIMER NOTICE

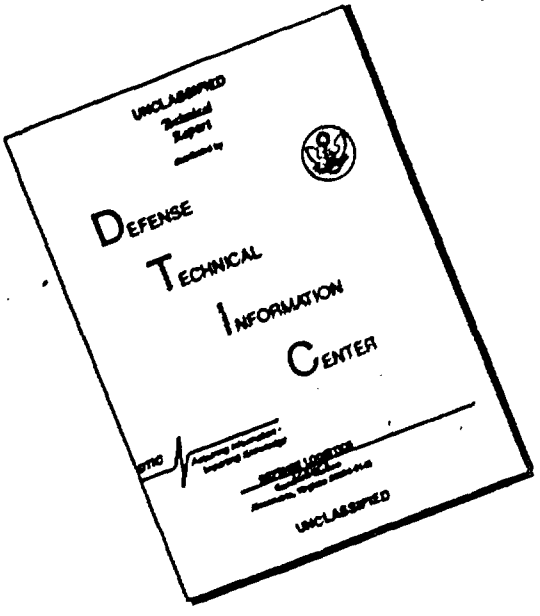

THIS DOCUMENT IS BEST QUALITY AVAILABLE. THE COPY FURNISHED TO DTIC CONTAINED A SIGNIFICANT NUMBER OF PAGES WHICH DO NOT REPRODUCE LEGIBLY.

NOTICE: When government or other drawings, specifications or other data are used for any purpose other than in connection with a definitely related government procurement operation, the U. S. Government thereby incurs no responsibility, nor any obligation whatsoever; and the fact that the Government may have formulated, furnished, or in any way supplied the said drawings, specifications, or other data is not to be regarded by implication or otherwise as in any manner licensing the holder or any other person or corporation, or conveying any rights or permission to manufacture, use or sell any patented invention that may in any way be related thereto.

414572
CATALOGED BY DDC
AS AD No. 414572

THE EFFECT OF NONLINEAR STATIC COUPLING ON THE MOTION STABILITY OF A SHIP MOVING IN OBLIQUE WAVES

by

W. D. Kinney

prepared under Contract Nonr-222(75)
sponsored under the Bureau of Ships
Fundamental Hydromechanics Research Program,
Project S-R009 01 01, technically administered by
The David Taylor Model Basin

Report No. NA-63-3
Contract Nonr-222(75)
June 1963

AUG 26 1963
TISIA D

INSTITUTE OF ENGINEERING RESEARCH

UNIVERSITY OF CALIFORNIA
Berkeley, California

THE EFFECT OF NONLINEAR STATIC COUPLING ON THE MOTION STABILITY OF A SHIP MOVING IN OBLIQUE WAVES

by

W. D. Kinney

Prepared under Contract Nonr 222(75)
Sponsored under the Bureau of Ships Fundamental
Hydromechanics Research Program, Project S-R009 01 01
Technically administered by the David Taylor Model Basin

Reproduction in whole or in part is permitted
for any purpose of the United States Government

Institute of Engineering Research
University of California
Berkeley

June 1963

Abstract

The equations of motion of a ship constrained to oscillate in heave, pitch, and roll, while moving ahead with a uniform velocity in oblique waves are studied. It is shown that because of the non-linear static coupling which is known to exist between these degrees of freedom, the rolling response can become large when the period of wave encounter is in the neighborhood of one half the natural rolling period. In this case the response has a period which is equal to twice the period of the excitation, and which, as a consequence, is nearly equal to the natural period.

List of Symbols

x, y, z = displacements of ship along x, y, z-axes (surge, sway and heave).

ϕ, θ, ψ = rotations about x, y, z-axis (roll, pitch and yaw).

u = component of ship velocity along x-axes.

I_x, I_y = mass moments of inertia about x, y-axes.

$\bar{K}, \bar{M}$ = components of moment along x, y-axes.

$\bar{Z}$ = component of force along z-axis.

$2A$ = wave height.

L = ship length.

λ = wave length.

ω = frequency of wave encounter.

α = heading of ship with respect to direction of wave travel.

γ = fraction of critical damping.

Dots denote time differentiation.

Introduction

In the study of ship motions, as in the study of the motion of any rigid body, two approaches are generally used to refine the linear theory: One may introduce refinements in the terms already appearing in the linearized equations of motion (e.g. added mass and damping terms) or one may introduce higher order terms into the equations. It is the latter approach which is adopted in this paper.

The nonlinear terms retained in the equations of motion are, for the most part, the same second order static coupling terms retained by Paulling and Rosenberg [1][1], Kinney [2,5], and Hsu [3,4]. The difference between the investigation presented here and the ones just cited is that here we consider the ship free to oscillate simultaneously in the degrees of freedom of heave, pitch, and roll while moving ahead with uniform velocity in oblique waves, and include the effect of second order damping in roll. It is shown that when the frequency of wave encounter is in the neighborhood of twice the natural rolling frequency, the roll amplitude may tend to become large, and the rolling response may exhibit a period equal to twice the period of the excitation, which, as a consequence, is nearly equal to the natural period.

---

[1] Numbers in brackets designate References at end of paper.

1. Equations of Motion

Here, we shall derive the equations of motion of a rigid ship executing motions about its equilibrium position. The purpose of this discussion is two-fold:

(a) To state clearly, and to justify, all assumptions considered necessary to render the problem tractable, and

(b) To demonstrate in what way all earlier analyses [1,2,3,4,5] constitute special cases of this paper.

The coordinate axes are the xyz-triad whose origin coincides with the mass center of the ship. The x-axis lies in the fore-and-aft plane of symmetry of the ship; it is parallel to the design water plane of the ship and is positive forward. The y-axis is positive to starboard, its eleveation being such that the xy-plane is parallel to the design water plane. The z-axis is orthogonal to the x and y-axes, and is positive downward. The six degrees of freedom of the ship consist of translations parallel to the xyz-axes, and rotations about them. The translations will be denoted by x,y,z respectively, and the rotations by: ϕ about the x-axis, θ about the y-axis, and ψ about the z-axis. The translations are positive in the positive directions of the axes, and the rotations are positive in accordance with the right-hand rule. All coordinates are zero in the equilibrium position.

Assumption A:

The ship is rigidly constrained in sway and yaw, i.e. $y = \psi = 0$, and the surging motion is prescribed to be uniform.

Justification:

The above assumption is made because it is the explicit purpose

of this analysis to examine only motion in the remaining degrees of freedom.

<u>Assumption B</u>:

The xyz-axes are principal axes of the ship.

<u>Justification</u>:

Ships to be considered here possess athwartship symmetry and nearly fore-and-aft symmetry. The deviation from the latter is so small that this assumption is considered justified.

Under Assumptions A and B, the equations of motion are those in heave, pitch, and roll; they are

$$\begin{aligned} m\ddot{z} &= \bar{Z} \\ I_y\ddot{\theta} &= \bar{M} \\ I_x\ddot{\phi} &= \bar{K} \end{aligned} \tag{1.1}$$

where m is the mass of the ship, Iy and Ix are the mass moments of inertia about the y and x-axes respectively, and $\bar{Z}$, $\bar{M}$, and $\bar{K}$ are the external forces or moments in heave, pitch, and roll respectively.

<u>Assumption C</u>:

$\bar{Z}$, $\bar{M}$, and $\bar{K}$ are, in the neighborhood of the equilibrium position, analytic functions of the displacements z, ϕ, θ, the velocities $\dot{z}$, $\dot{\phi}$, $\dot{\theta}$, and the accelerations $\ddot{z}$, $\ddot{\phi}$, $\ddot{\theta}$.

<u>Justification</u>:

If Assumption C were violated, linear analysis about the equilibrium would be inadmissable.

Thus, the right-hand sides of (1.1) may be represented by a general expression

$$\bar{Q}_j = \bar{Q}_j(z, \phi, \theta, \dot{z}, \dot{\phi}, \dot{\theta}, \ddot{z}, \ddot{\phi}, \ddot{\theta})$$

where $\bar{Q}_1 = \bar{Z}$, $\bar{Q}_2 = \bar{M}$, $\bar{Q}_3 = \bar{K}$, and since the coordinates vanish in the equilibrium position,

$$\bar{Q}_j(0,0,0,0,0,0,0,0,0) = 0$$

Moreover, in view of Assumption C, every $\bar{Q}_j$ may be expanded in a Taylor's series about the equilibrium position.

<u>Assumption D</u>:

The Taylor's series expansion of the $\bar{Q}_j$ will include only terms up to and including second order.

<u>Justification</u>:

It is the explicit purpose of this analysis to examine certain second order effects.

Writing temporarily $\xi_1 = z$, $\xi_2 = \theta$, $\xi_3 = \phi$, the terms on the right-hand side of (1.1) become

$$\begin{aligned}
\bar{Q}_i = \sum_{j=1}^{3} \Big(& \frac{\partial \bar{Q}_i}{\partial \xi_j} \xi_j + \frac{\partial \bar{Q}_i}{\partial \dot{\xi}_j} \dot{\xi}_j + \frac{\partial \bar{Q}_i}{\partial \ddot{\xi}_j} \ddot{\xi}_j \Big) \\
& + \frac{1}{2} \sum_{j=1}^{3} \sum_{k=1}^{3} \Big(\frac{\partial^2 \bar{Q}_i}{\partial \xi_j \partial \xi_k} \xi_j \xi_k + \frac{\partial^2 \bar{Q}_i}{\partial \xi_j \partial \dot{\xi}_k} \xi_j \dot{\xi}_k \\
& + \frac{\partial^2 \bar{Q}_i}{\partial \xi_j \partial \ddot{\xi}_k} \xi_j \ddot{\xi}_k + \frac{\partial^2 \bar{Q}_i}{\partial \dot{\xi}_j \partial \dot{\xi}_k} \dot{\xi}_j \dot{\xi}_k \\
& + \frac{\partial^2 \bar{Q}_i}{\partial \dot{\xi}_j \partial \ddot{\xi}_k} \dot{\xi}_j \ddot{\xi}_k + \frac{\partial^2 \bar{Q}_i}{\partial \ddot{\xi}_j \partial \ddot{\xi}_k} \ddot{\xi}_j \ddot{\xi}_k \Big)
\end{aligned} \tag{1.2}$$

where the partial derivatives are evaluated at the equilibrium position.

<u>Assumption E</u>:

All second order terms in (1.2) involving velocities and accelerations (except for the term $\frac{\partial^2 \bar{Q}_a}{\partial \dot{\xi}_3 \partial \dot{\xi}_3} \dot{\xi}_3^2$) will be discarded.

<u>Justification</u>:

This assumption is dictated largely by the lack of knowledge of the magnitude of the ignored derivatives. The only term retained here is the second order damping effect in roll; its physical meaning is clear, its magnitude can easily be determined, and its effect is considered significant. There are, however, other rational reasons for this assumption. Since the present analysis is a refinement on linear analysis, one may safely assume that the primary effects of velocity and acceleration on the motion are included by retaining the first order terms in these quantities. Moreoever, this analysis is concerned with the effect of <u>static</u> coupling on the stability of the motion, and the discarded terms do not represent static coupling.

Under all assumptions listed here, the equations of motion become

$$\begin{aligned}\ddot{\zeta} = {} & Z_\zeta \zeta + Z_\phi \phi + Z_\theta \theta + Z_{\dot\theta} \dot\theta + Z_{\dot\phi} \dot\phi + Z_{\dot\zeta} \dot\zeta + Z_{\ddot\theta} \ddot\theta \\ & + Z_{\ddot\phi} \ddot\phi + \tfrac{1}{2} Z_{\zeta\zeta} \zeta^2 + \tfrac{1}{2} Z_{\phi\phi} \phi^2 + \tfrac{1}{2} Z_{\theta\theta} \theta^2 + Z_{\zeta\theta} \zeta\theta \\ & + Z_{\zeta\phi} \zeta\phi + Z_{\phi\theta} \phi\theta .\end{aligned} \tag{1.3}$$

$$\begin{aligned}\ddot{\theta} = {} & M_\theta \theta + M_\zeta \zeta + M_\phi \phi + M_{\dot\theta} \dot\theta + M_{\dot\zeta} \dot\zeta + M_{\dot\phi} \dot\phi + M_{\ddot\zeta} \ddot\zeta \\ & M_{\ddot\phi} \ddot\phi + \tfrac{1}{2} M_{\theta\theta} \theta^2 + \tfrac{1}{2} M_{\zeta\zeta} \zeta^2 + \tfrac{1}{2} M_{\phi\phi} \phi^2 + M_{\zeta\theta} \zeta\theta \\ & + M_{\phi\theta} \phi\theta + M_{\phi\zeta} \phi\zeta .\end{aligned} \tag{1.4}$$

$$\ddot{\phi} = K_{\phi}\phi + K_{z}z + K_{\theta}\theta + K_{\dot{\phi}}\dot{\phi} + K_{\dot{\phi}\dot{\phi}}\dot{\phi}|\dot{\phi}| + K_{\dot{z}}\dot{z} + K_{\dot{\theta}}\dot{\theta}$$
$$+ K_{\ddot{\theta}}\ddot{\theta} + K_{\ddot{z}}\ddot{z} + \frac{1}{2}K_{\phi\phi}\phi^2 + \frac{1}{2}K_{\theta\theta}\theta^2 + \frac{1}{2}K_{zz}z^2 \tag{1.5}$$
$$+ K_{\phi\theta}\phi\theta + K_{\phi z}\phi z + K_{\theta z}\theta z \; .$$

where the subscripts denote partial differentiation, where

$$Z_z = \frac{\bar{Z}_z}{m - \bar{Z}_{\ddot{z}}}, \text{ etc.} \qquad M_z = \frac{\bar{M}_z}{I_y - \bar{M}_{\ddot{\theta}}}, \text{ etc.} \tag{1.6}$$
$$K_z = \frac{\bar{K}_z}{I_x - \bar{K}_{\ddot{\phi}}}, \text{ etc.}$$

and where in (1.5) the term $K_{\dot{\phi}\dot{\phi}}\dot{\phi}^2$ which would normally appear in the Taylor's expansion has been replaced by $K_{\dot{\phi}\dot{\phi}}\dot{\phi}|\dot{\phi}|$. The reason for this is that physically the term represents a damping moment and therefore should change sign with the velocity.

The equations (1.3), (1.4), and (1.5) simplify considerably when the athwartship symmetry of the ship is utilized. In particular

$$Z_{\phi} = Z_{\dot{\phi}} = Z_{\ddot{\phi}} = Z_{z\phi} = Z_{\phi\theta} = 0$$
$$M_{\phi} = M_{\dot{\phi}} = M_{\ddot{\phi}} = M_{z\phi} = M_{\phi\theta} = 0$$
$$K_z = K_{\theta} = K_{\dot{z}} = K_{\dot{\theta}} = K_{\ddot{z}} = K_{\ddot{\theta}} = K_{\phi\phi} = K_{\theta\theta} = K_{zz} = K_{\theta z} = 0$$

so that the equations of motion become

$$\ddot{z} = Z_z z + Z_{\dot{z}}\dot{z} + Z_{\theta}\theta + Z_{\dot{\theta}}\dot{\theta} + Z_{\ddot{\theta}}\ddot{\theta} \tag{1.7}$$
$$+ \frac{1}{2}Z_{zz}z^2 + \frac{1}{2}Z_{\theta\theta}\theta^2 + \frac{1}{2}Z_{\phi\phi}\phi^2 + Z_{z\theta}z\theta$$

$$\ddot{\theta} = M_{\theta}\theta + M_{\dot{\theta}}\dot{\theta} + M_{z}z + M_{\dot{z}}\dot{z} + M_{\ddot{z}}\ddot{z} \tag{1.8}$$
$$+ \frac{1}{2}M_{zz}z^2 + \frac{1}{2}M_{\theta\theta}\theta^2 + \frac{1}{2}M_{\phi\phi}\phi^2 + M_{z\theta}z\theta .$$

$$\ddot{\phi} = K_{\phi}\phi + K_{\dot{\phi}}\dot{\phi} + K_{\dot{\phi}\dot{\phi}}\dot{\phi}|\dot{\phi}| + K_{\phi z}\phi z + K_{\phi\theta}\phi\theta . \tag{1.9}$$

Next we propose

<u>Assumption F</u>: $Z_{zz} = M_{\theta\theta} = 0$

<u>Justification</u>:

It can readily be shown numerically that the linear terms $Z_z z$ and $M_\theta \theta$ account adequately for the heaving force due to heaving, and the rolling moment due to roll. Moreoever, the second order terms in this assumption do not represent static coupling between degrees of freedom.

<u>Assumption G</u>:

The effect of a seaway on the motion will be taken into account by adding terms $Z(t)$, $M(t)$, and $K(t)$, respectively to the equations of motion.

<u>Justification</u>:

The waves are considered as known functions of time, and the effect of the ship itself on the seaway is considered negligible. Under Assumptions A to G, the equations of motion become

$$\begin{aligned}\ddot{z} &= Z_z z + Z_{\dot{z}}\dot{z} + Z_\theta\theta + Z_{\dot{\theta}}\dot{\theta} + Z_{\ddot{\theta}}\ddot{\theta} \\ &\quad + \tfrac{1}{2}Z_{\phi\phi}\phi^2 + \tfrac{1}{2}Z_{\theta\theta}\theta^2 + Z_{z\theta}z\theta + Z(t),\end{aligned} \tag{1.10}$$

$$\begin{aligned}\ddot{\theta} &= M_\theta\theta + M_{\dot{\theta}}\dot{\theta} + M_z z + M_{\dot{z}}\dot{z} + M_{\ddot{z}}\ddot{z} \\ &\quad + \tfrac{1}{2}M_{zz}z^2 + \tfrac{1}{2}M_{\phi\phi}\phi^2 + M_{z\theta}z\theta + M(t)\end{aligned} \tag{1.11}$$

$$\ddot{\phi} = K_\phi\phi + K_{\dot{\phi}}\dot{\phi} + K_{\dot{\phi}\dot{\phi}}\dot{\phi}|\dot{\phi}| + K_{\phi z}\phi z + K_{\phi\theta}\phi\theta + K(t). \tag{1.12}$$

Not all of the partial derivatives in the equations of motion are independent. In fact they satisfy the following relationships [1,2]

$$\bar{Z}_{\theta} = \bar{M}_{\zeta}, \quad \bar{Z}_{\ddot{\theta}} = \bar{M}_{\ddot{\zeta}}, \quad \bar{Z}_{\theta\theta} = \bar{M}_{\zeta\theta}, \quad \bar{Z}_{\phi\phi} = \bar{K}_{\phi\zeta}$$
$$\bar{M}_{\zeta\zeta} = \bar{Z}_{\zeta\theta}, \quad \bar{M}_{\phi\phi} = \bar{K}_{\phi\theta}. \tag{1.13}$$

Equations (1.10), (1.11), and (1.12), together with (1.13) are those on which all future development is based.

Below, we examine the relation between these equations of motion and those of earlier analyses. All contained

<u>Assumption A</u>': $\bar{Z}_{\theta\theta} = \bar{Z}_{\phi\phi} = \bar{M}_{\zeta\zeta} = \bar{M}_{\phi\phi} = \bar{K}_{\dot{\phi}\dot{\phi}} = 0$

Under this assumption the stability analysis of the motion is reduced to the discussion of Mathieu equations which can be decoupled.

The equations of Hsu [3] emerge by considering the ship as symmetric fore-and-aft, or

<u>Assumption B</u>': $\bar{Z}_{\theta} = \bar{Z}_{\dot{\theta}} = \bar{Z}_{\ddot{\theta}} = \bar{Z}_{\zeta\theta} = \bar{M}_{\zeta} = \bar{M}_{\dot{\zeta}} = 0$

$$\bar{M}_{\ddot{\zeta}} = \bar{K}_{\phi\theta} = \bar{K}(t) = 0$$

and that the waves have sinusoidal shape and travel with uniform velocity, or

<u>Assumption C</u>':

$$Z(t) = Z_{eo} \cos \omega t$$
$$M(t) = M_{eo} \sin \omega t$$

where ω is the frequency of wave encounter.

In that case one finds Hsu's [3] equations

$$\ddot{\zeta} + C_{\zeta}\dot{\zeta} + \omega_{\zeta}^2 \zeta = Z_{eo} \cos \omega t \tag{1.14}$$

$$\ddot{\theta} + C_{\theta}\dot{\theta} + \omega_{\theta}^2 \theta - M_{\zeta\theta}\zeta\theta = M_{eo} \sin \omega t \tag{1.15}$$

$$\ddot{\phi} + C_{\phi}\dot{\phi} + \omega_{\phi}^2 - K_{\phi\zeta}\phi\zeta = 0 \tag{1.16}$$

where use has been made of the notation

$$C_\zeta = -Z_{\dot\zeta}\,, \quad C_\phi = -K_{\dot\phi}\,, \quad C_\theta = -M_{\dot\theta} \tag{1.17}$$

$$\omega_\zeta^2 = -Z_\zeta\,, \quad \omega_\phi^2 = -K_\phi\,, \quad \omega_\theta^2 = -M_\theta \tag{1.18}$$

Hsu's equation [4] are obtained by admitting as the only degrees of freedom those of heave and pitch, or

<u>Assumption B"</u>: $Z_{\dot\zeta} = Z_\theta = Z_{\dot\theta} = Z_{\ddot\theta} = M_{\dot\theta} = M_\zeta = M_{\dot\zeta} = M_{\ddot\zeta} = 0$

and by assuming a calm sea, or

<u>Assumption C"</u>: $Z(t) = M(t) = 0.$

In that case one finds [4]

$$\begin{aligned} \ddot\zeta &= Z_\zeta \zeta + Z_{\zeta\theta}\zeta\theta \\ \ddot\theta &= M_\theta \theta + M_{\zeta\theta}\zeta\theta \end{aligned} \tag{1.19}$$

If one also proposes

<u>Assumption D"</u>: $Z_\zeta = M_\theta$

Hsu shows that the solutions of (1.19) are always unstable.

If one admits only the degrees of freedom of pitch and roll and includes linear damping in roll, but no damping in pitch, one has

<u>Assumption B'''</u>: $\zeta = M_{\dot\theta} = M(t) = K(t) = 0$

and the equations of motion are those examined by Kinney [5]. They are

$$\begin{aligned} \dot\theta &= M_\theta \theta \\ \ddot\phi &= K_\phi \phi + K_{\dot\phi}\dot\phi + K_{\phi\theta}\phi\theta \end{aligned} \tag{1.20}$$

If all damping is ignored, and any two of the three degrees of freedom of heave, pitch, and roll are admitted, one finds the equations of Paulling and Rosenberg [1] for

Heave-Roll:

$$\ddot{z} = Z_z z$$
$$\ddot{\phi} = K_\phi \phi + K_{\phi z} \phi z \tag{1.21}$$

Pitch-Roll:

$$\ddot{\theta} = M_\theta \theta$$
$$\ddot{\phi} = K_\phi \phi + K_{\phi\theta} \phi \theta \tag{1.22}$$

Heave-Pitch:

$$\ddot{z} = Z_z z + Z_{z\theta} z \theta$$
$$\ddot{\theta} = M_\theta \theta + M_{z\theta} z \theta \tag{1.23}$$

These last three pairs of equations [1] are those which have initiated this study of the nonlinear static coupling effects on the stability of ship motions.

To complete this discussion we shall present below a brief summary of the results of the earlier analyses [1,2,3,4,5]. We will show that all the equations of motion considered in these analyses can be reduced to the standard form of Mathieu's equation, the stability of which can be discussed in a straight forward manner. We will therefore begin by giving a brief discussion of Mathieu's equation.

The standard form of the Mathieu equation with damping is

$$\frac{d^2y}{dx^2} + 2K\frac{dy}{dx} + (\delta + \epsilon \cos x)y = 0 \tag{1.24}$$

where K, δ and ϵ are three arbitrary parameters.

The stability of a solution $y=y(x)$ can be deduced from the Ince-Strutt chart which consists of a series of curves $\delta=\delta(\epsilon)$, which divide the $\delta\epsilon$-plane into stable and unstable regions. For values of δ and ϵ which define a point inside of, or on the boundary of an unstable region, the solution is unstable. Figure 1 shows an approximation of the curves defining the boundary between the stable and unstable regions for $k = 0$, due to Stoker [6], which is adequate for moderate values of ϵ.

For $k \neq 0$ the equation of the boundary curves between the stable and unstable regions near $\delta = 1/4$ have been given in [5] for small values of ϵ. It is[2]

$$16\delta^2(1-\gamma^2)-8\delta\left[1-3\gamma^2-\frac{\epsilon^2}{2}(1-\gamma^2)\right]+1-5\epsilon^2=0 \tag{1.25}$$

where γ is the fraction of critical damping and is plotted in Figure 2.

For a more detailed discussion of the solutions to Mathieu's equations the reader is referred to McLachlan [7].

We shall now examine the stability of the solutions of the equations of motion presented above.

---

[2] The standard form of Mathieu's equation in [5] is $y''+2ky'+(\alpha-2q\cos 2x)y=0$ instead of (1.24) so that the equation of the boundary curve presented there is in terms of α and q. The conversion to δ and ϵ is self-evident.

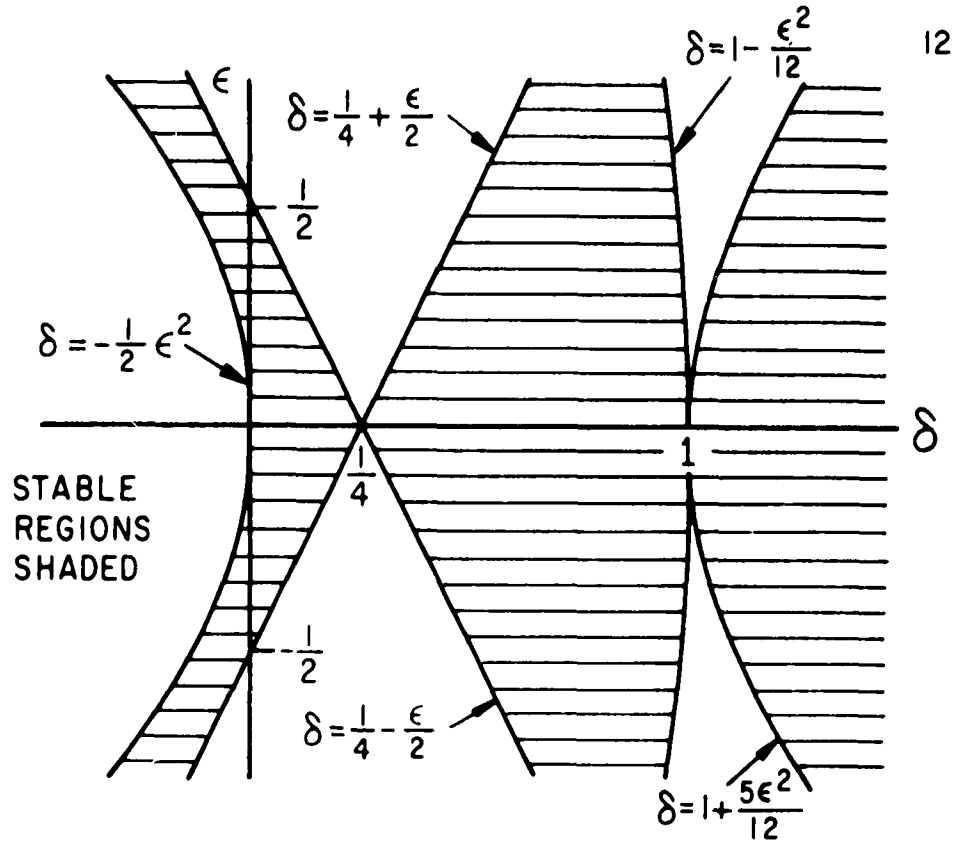

FIG. 1 STOKER'S APPROXIMATION OF STABLE AND UNSTABLE REGIONS FOR THE MATHIEU EQUATION

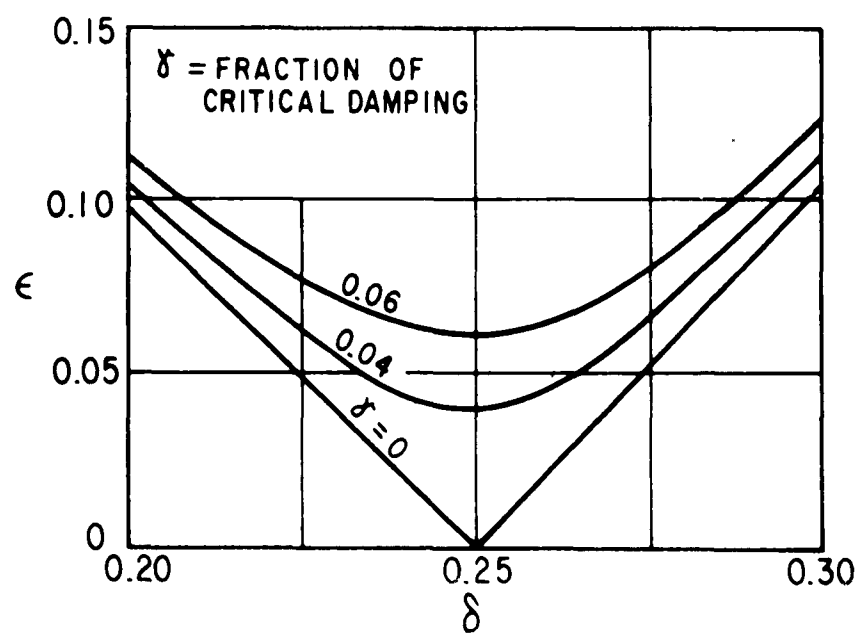

FIG. 2 THE EFFECT OF DAMPING ON THE $\delta\epsilon$ PLANE

The equations (1.14), (1.15), and (1.16) of Hsu [3] may be put in standard form as follows: Equation (1.14) can be easily integrated, giving

$$z = A_z \cos(\omega t - \alpha_z) \tag{1.26}$$

where

$$A_z = \frac{Z_{eo}}{\sqrt{(c_z\omega)^2 + (\omega_z^2 - \omega^2)^2}}, \qquad \alpha_z = \tan^{-1} \frac{c_z \omega}{\omega_z^2 - \omega^2} \tag{1.27}$$

Substitution of (1.26) into (1.15) and (1.16) yields

$$\begin{aligned} &\ddot{\phi} + c_\phi \dot{\phi} + [\omega_\phi^2 - K_{\phi z} A_z \cos(\omega t - \alpha_z)]\phi = 0 \\ &\ddot{\theta} + c_\theta \dot{\theta} + [\omega_\theta^2 - M_{\theta z} A_z \cos(\omega t - \alpha_z)]\theta = M_{eo} \sin \omega t \end{aligned} \tag{1.28}$$

which, in terms of a new time variable τ defined by $\tau = \omega t - \alpha_z$, may be written as

$$\begin{aligned} &\frac{d^2\phi}{d\tau^2} + 2K_\phi \frac{d\phi}{d\tau} + (\delta_\phi + \epsilon_\phi \cos\tau)\phi = 0 \\ &\frac{d^2\theta}{d\tau^2} + 2K_\theta \frac{d\theta}{d\tau} + (\delta_\theta + \epsilon_\theta \cos\tau)\theta = \frac{M_{eo}}{\omega^2} \sin(\tau + \alpha_z) \end{aligned} \tag{1.29}$$

where

$$2K_\phi = \frac{c_\phi}{\omega}, \qquad \delta_\phi = \frac{\omega_\phi^2}{\omega^2}, \qquad \epsilon_\phi = -\frac{K_{\phi z} A_z}{\omega^2} \tag{1.30}$$

$$2K_\theta = \frac{c_\theta}{\omega}, \qquad \delta_\theta = \frac{\omega_\theta^2}{\omega^2} \qquad \epsilon_\theta = -\frac{M_{z\theta} A_z}{\omega^2} \tag{1.31}$$

Both equations (1.29) are in standard form except for the inhomogeneous term on the right hand side of the equation for θ. However, as Hsu points out in [3], for such an equation in which the inhomogeneous

term is harmonic with a frequency equal to that of the periodic coefficient appearing in the equation, the necessary and sufficient condition that solutions be stable (unstable) is that the solutions to the corresponding homogeneous equation be stable (unstable). For a detailed discussion of this see [8].

We are therefore led to

<u>Result I</u>: Under the assumptions leading to equations (1.14), (1.15), and (1.16), the stability of the pitching and rolling motions of a ship moving forward with uniform velocity in longitudinal waves is determined by the positions of the pair of points (δ_ϕ , ϵ_ϕ) and (δ_θ , ϵ_θ) in the Ince-Strutt chart, where δ_ϕ , ϵ_ϕ , δ_θ , and ϵ_θ are given by (1.20) and (1.30). Instabilities are most likely to occur when δ_ϕ is near 1/4.

A detailed analysis of the stability of the solutions of equations (1.19) is too lengthy to be included here. Hence we shall only sketch the method used by Hsu [4] and state the result.

By denoting the solutions of (1.19) by $\zeta^*(t)$ and $\theta^*(t)$ and by introducing perturbations of these solutions, denoted by X_1 and X_2 respectively, one arrives at the equations of the first variation with respect to $\zeta^*(t)$ and $\theta^*(t)$. By further assuming that $-Z_\zeta = -M_\theta = \omega^2$ and that $\zeta^*(t)$ and $\theta^*(t)$ may be approximated with sufficient accuracy by $\zeta^*(t) = Z_0 \cos\omega t$ and $\theta^*(t) = \theta_0 \cos\omega t$, these variational equations take the form of a set of two coupled Mathieu equations. Hsu then shows that by introducing new variables z_1 and z_2 related to X_1 and X_2 by the linear transformation

$$z_1 = M_{z\theta} x_1 - Z_{z\theta} x_2$$

$$z_2 = \theta_0 x_1 + Z_0 x_2$$

these equations decouple into two Mathieu equations, the solutions of which are always unstable. The conclusion is

<u>Result II:</u> Under the assumptions leading to equation (1.19), the heaving and pitching motion executed by a ship in calm water are always unstable.

We now turn to equations (1.20). Introducing the notation

$$-M_\theta = \omega_\theta^2 \qquad -K_\phi = \omega_\phi^2$$

they can be written as

$$\ddot{\theta} + \omega_\theta^2 \theta = 0$$

$$\ddot{\phi} - K_{\dot{\phi}} \dot{\phi} + \omega_\phi^2 \phi - K_{\phi\theta} \phi \theta = 0 . \tag{1.32}$$

The first of (1.32) can be integrated to give $\theta = \theta_0 \cos(\omega_\theta t + \beta)$ where θ_0 and β are constants of integration and, without loss of generality, we may set $\beta = 0$. Substituting the resulting expression for θ into the second of (1.32) gives the Mathieu equation

$$\ddot{\phi} - K_{\dot{\phi}} \dot{\phi} + (\omega_\phi^2 - K_{\phi\theta} \theta_0 \cos \omega_\theta t) \phi = 0 \tag{1.33}$$

which can be put into standard form by the change of independent variable defined by $\tau = \omega_\theta t$. The result is

$$\frac{d^2\phi}{d\tau^2} + 2K \frac{d\phi}{d\tau} + (\delta_\phi + \epsilon_\phi \cos \tau)\phi = 0$$

where

$$2K = \frac{-K_{\dot{\phi}}}{\omega_\theta}, \qquad \delta_\phi = \frac{\omega_\phi^2}{\omega_\theta^2}, \qquad \epsilon_\phi = -\frac{K_{\phi\theta}\,\theta_0}{\omega_\theta^2} \tag{1.34}$$

We are therefore led to

<u>Result III</u>: Under the assumptions leading to equation (1.20) the stability of the rolling motion of a ship oscillating in pitch and roll in calm water is determined by the position of the point (δ_ϕ , ϵ_ϕ) in the Ince-Strutt chart where δ_ϕ and ϵ_ϕ are given by (1.34). Instabilities are most likely to occur when δ_ϕ is near 1/4.

Equation (1.23) has, in effect, already been discussed since it is identical with (1.19), and the discussion of (1.21) and (1.22) proceeds in a manner similar to that for (1.20), the only difference being the absence of damping terms in the former. This then completes the discussion and we return to equations (1.10) (1.11) and (1.12), the integration of which is the main subject of this paper.

Equations (1.10), (1.11), and (1.12) constitute a set of three nonlinear, coupled, second order differential equations, and considering the present status of knowledge concerning such equations, it is impossible to find their general solutions by analytical means. Therefore, particular solutions will be obtained by means of an electronic analogue computer under the conditions that the ship is initially at rest. However, before proceeding to that phase of the study it will be advantageous to gain some insight into the problem by making some simplifying assumptions in the equations of motion and proceeding analytically as far as possible, just as was done in all preceeding analyses. We will show that under such assumptions the equations of motion for pitch and roll reduce to the form of inhomogeneous Mathieu equations, the stability theory of which is well established. It should be stressed, however, that is is not

our intention to test the validity of these assumptions by means of the analogue simulation which is described later. Instead, the analysis which follows is only intended to aid the analogue computation by indicating if and under what conditions instabilities may be expected.

2. Simplified Analysis Based on Mathieu's Equation.

A great simplification in the equations of motion occurs when the ship is assumed to be symmetrical fore and aft. Under this assumption

$$\bar{Z}_{\zeta\theta} = \bar{M}_{\zeta\zeta} = \bar{Z}_{\theta} = \bar{Z}_{\dot{\theta}} = \bar{Z}_{\ddot{\theta}} = 0$$

$$\bar{M}_{\phi\phi} = \bar{K}_{\phi\theta} = \bar{M}_{\zeta} = \bar{M}_{\dot{\zeta}} = M_{\ddot{\zeta}} = 0$$

and equations (1.10) through (1.12) become

$$\ddot{\zeta} = Z_{\zeta}\zeta + Z_{\dot{\zeta}}\dot{\zeta} + \frac{1}{2} Z_{\phi\phi}\phi^2 + \frac{1}{2} Z_{\theta\theta}\theta^2 + Z(t) \tag{2.1}$$

$$\ddot{\theta} = M_{\theta}\theta + M_{\dot{\theta}}\dot{\theta} + M_{\zeta\theta}\zeta\theta + M(t) \tag{2.2}$$

$$\ddot{\phi} = K_{\phi}\phi + K_{\dot{\phi}}\dot{\phi} + K_{\phi\phi}\dot{\phi}|\dot{\phi}| + K_{\phi\zeta}\phi\zeta + K(t) \tag{2.3}$$

Moreover, we neglect the terms $\frac{1}{2} Z_{\phi\phi}\phi^2$ and $\frac{1}{2} Z_{\theta\theta}\theta^2$ in (2.1) for the following reason: Suppose that the pitching and rolling motions are known functions of time and it is required to find ζ. Substituting these known functions for ϕ and θ into (2.1) would make the terms $\frac{1}{2} Z_{\phi\phi}\phi^2$ and $\frac{1}{2} Z_{\theta\theta}\theta^2$ known functions of time which could then be combined with $Z(t)$, the result being, as far as ζ is concerned, a modification in the external excitation, and it is not likely that such a modification would greatly alter the phenomenon. Note, however, that a similar argument could not be

used to neglect the terms $M_{z\theta} z\theta$ and $K_{\phi z} \phi z$ in (2.2) and (2.3). For suppose z is a known function of time and it is required to solve for ϕ and θ. Substituting this known function for z into (2.2) and (2.3) would have the effect of introducing time dependent coefficients into the equations, which in turn would greatly alter the character of the solutions.

For this analysis we will also disregard the nonlinear damping factor in roll. With these simplifications then (2.1) through (2.3) become

$$\ddot{z} + C_z \dot{z} + \omega_z^2 z = Z(t) \tag{2.4}$$

$$\ddot{\theta} + C_\theta \dot{\theta} + (\omega_\theta^2 - M_{z\theta} z)\theta = M(t) \tag{2.5}$$

$$\ddot{\phi} + C_\phi \dot{\phi} + (\omega_\phi^2 - K_{\phi z} z)\phi = K(t) \tag{2.6}$$

where we have put

$$C_z = -Z_{\dot{z}}, \qquad C_\theta = -M_{\dot{\theta}}, \qquad C_\phi = -K_{\dot{\phi}}$$

$$\omega_z^2 = -Z_z, \qquad \omega_\theta^2 = -M_\theta, \qquad \omega_\phi^2 = -K_\phi$$

to conform with the usual notation used in the theory of vibrations.

Assuming sinusoidal waves, the external excitation terms $Z(t)$, $M(t)$, and $K(t)$ may be written in the form

$$Z(t) = Z_1 \cos \omega t + Z_2 \sin \omega t \tag{2.7}$$

$$M(t) = M_1 \cos \omega t + M_2 \sin \omega t \tag{2.8}$$

$$K(t) = K_1 \cos \omega t + K_2 \sin \omega t \tag{2.9}$$

or

$$Z(t) = Z_0 \cos(\omega t + \gamma_z) \tag{2.10}$$

$$M(t) = M_0 \cos(\omega t + \gamma_\theta) \tag{2.11}$$

$$K(t) = K_0 \cos(\omega t + \gamma_\phi) \tag{2.12}$$

where ω is the circular frequency of wave encounter which depends on the geometry of the waves, the heading of the ship with respect to the direction of wave travel, and the speed of the ship. When (2.10) is substituted into (2.4) it can be solved for z, giving

$$z = A_z \cos(\omega t + \alpha_z) \tag{2.13}$$

where

$$A_z = \frac{Z_0}{\sqrt{(c_z\omega)^2 + (\omega_z^2 - \omega^2)^2}}, \quad \alpha_z = \gamma_z - \psi, \qquad \psi = \tan^{-1} \frac{c_z \omega}{\omega_z^2 - \omega^2}$$

Now (2.13) together with (2.11) and (2.12) may be substituted into (2.5) and (2.6) yielding the inhomogeneous Mathieu equations

$$\ddot{\theta} + c_\theta \dot{\theta} + [\omega_\theta^2 - M_{z\theta} A_z \cos(\omega t + \alpha_z)]\theta = M_0 \cos(\omega t + \gamma_\theta) \tag{2.14}$$

$$\ddot{\phi} + c_\phi \dot{\phi} + [\omega_\phi^2 - K_{\phi z} A_z \cos(\omega t + \alpha_z)]\phi = K_0 \cos(\omega t + \gamma_\phi) \tag{2.15}$$

These can be put into standard form by the change in time scale defined by $\tau = \omega t + \alpha_z$. The result is

$$\frac{d^2\theta}{d\tau^2} + 2k_\theta \frac{d\theta}{d\tau} + (\delta_\theta + \epsilon_\theta \cos\tau)\theta = \frac{M_0}{\omega^2} \cos(\tau - \alpha_z + \gamma_\theta) \tag{2.16}$$

$$\frac{d^2\phi}{d\tau^2} + 2k_\phi \frac{d\phi}{d\tau} + (\delta_\phi + \epsilon_\phi \cos\tau)\phi = \frac{K_0}{\omega^2} \cos(\tau - \alpha_z + \gamma_\phi) \tag{2.17}$$

where

$$\begin{aligned} k_\theta &= \frac{c_\theta}{2\omega}, & \delta_\theta &= \frac{\omega_\theta^2}{\omega^2}, & \epsilon_\theta &= -\frac{M_{z\theta} A_z}{\omega^2} \\ k_\phi &= \frac{c_\phi}{2\omega}, & \delta_\phi &= \frac{\omega_\phi^2}{\omega^2}, & \epsilon_\phi &= -\frac{K_{\phi z} A_z}{\omega^2} \end{aligned} \tag{2.18}$$

Inhomogeneous Mathieu equations such as these where the inhomogeneous term has the same frequency as the periodic coefficient

appearing in the equation have already been discussed above. There it was stated that the stability of solutions of such equations is the same as the stability of the solutions of the corresponding homogeneous equations, the stability chart of which is given in Figures 1 and 2. From it we conclude that for large values of damping, unstable solutions are not likely to occur. On the other hand, for small values of damping, unstable solutions are most likely to occur when δ is in the neighborhood of 1/4 and 1. Since damping in pitch is of the order of 50% of critical, it is not likely that unstable pitching motion will occur. However, since damping in roll is only of the order of 5% of critical (assuming no artificial devices such as bilge keels are used), based on the above remarks we might expect large roll angles for values of ω near $2\omega_\phi$ and ω_ϕ .

With this background we are now in a better position to investigate the solutions of (1.10) through (1.12) on the analogue computer. However, before we can perform the simulation we must choose definite values for the coefficients appearing in the equations, which is the subject of the next section.

3. Determination of Coefficients.

Since it would be prohibitive to examine solutions of (1.10) through (1.12) for a variety of ship forms, we shall, for concreteness, adopt the parent form of the Series 60, $C_B = 0.60$, 5' ship model. Many of the coefficients appearing in these equations may be found from the lines drawing of the model, the values of which are given on the next page.

$\bar{Z}_{\phi\phi} = \bar{K}_{\phi\zeta} = -11.1$ lb. $\qquad \bar{K}_{\phi} = -1.11$ lb-ft

$\bar{Z}_{\zeta} = -147$ lb/ft. $\qquad \bar{M}_{\theta} = -189$ lb-ft.

$\bar{Z}_{\theta} = \bar{M}_{\zeta} = -14.7$ lb. $\qquad \bar{M}_{\zeta\theta} = \bar{Z}_{\theta\theta} = -634$ lb

$\bar{Z}_{\zeta\theta} = \bar{M}_{\zeta\zeta} = -240$ lb/ft. $\qquad \bar{M}_{\phi\phi} = \bar{K}_{\phi\theta} = -8.07$ lb-ft.

The calculations leading to these values may be found in the Appendix. The remaining coefficients are known to depend on the speed and frequency of oscillation of the model, and curves for determining these terms may be found in [9]. However, for mathematical convenience we will take these coefficients as constants equal to a value within their range of variation. In this manner we find

$m - \bar{Z}_{\ddot{\zeta}} = 1.85$ lb-sec²/ft. $\qquad I_y - \bar{M}_{\ddot{\theta}} = 2.2$ lb-ft-sec²

$\bar{Z}_{\dot{\zeta}} = -6.5$ lb-sec/ft. $\qquad \bar{M}_{\dot{\theta}} = -5.7$ lb-ft-sec

$\bar{Z}_{\dot{\theta}} = 4.3$ lb-sec. $\qquad \bar{M}_{\dot{\zeta}} = -1.3$ lb-sec.

$\bar{Z}_{\ddot{\theta}} \cong 0 \qquad \bar{M}_{\ddot{\zeta}} \cong 0$

Curves were not readily available for the determination of the apparent mass moment of inertia and damping coefficients appearing in the rolling equation of motion. Concerning the former, however, a value has been found experimentally for this model (See [5]) for rolling in calm water. It is

$$I_x - \bar{K}_{\ddot{\phi}} = 0.0454 \text{ lb-ft-sec}^2$$

and will be used here. Concerning the latter, we will take values for the damping coefficients equal to those obtained from the "curve of extinction" as outlined in [10] using a free oscillation record of the rolling motion in calm water obtained experimentally (See [5]). We thus find

$$\bar{K}_{\dot{\phi}} = -0.0158 \text{ lb-ft-sec}, \quad \bar{K}_{\dot{\phi}\dot{\phi}} = -0.0342 \text{ lb-ft-sec}^2$$

Using these values, we then find from (1.6)

$$Z_{\zeta} = -79.4 \text{ sec}^{-2} \qquad M_{\theta} = -86.0 \text{ sec}^{-2} \qquad K_{\phi} = -24.4 \text{ sec}^{-2}$$

$$Z_{\dot{\zeta}} = -3.51 \text{ sec}^{-1} \qquad M_{\dot{\theta}} = -2.59 \text{ sec}^{-1} \qquad K_{\dot{\phi}} = -0.348 \text{ sec}^{-1}$$

$$Z_{\theta} = -7.95 \text{ ft/sec}^2 \qquad M_{\zeta} = -6.68 \text{ 1/ft-sec}^2 \qquad K_{\dot{\phi}\dot{\phi}} = -0.754$$

$$Z_{\dot{\theta}} = 2.32 \text{ ft/sec} \qquad M_{\dot{\zeta}} = -0.590 \text{ 1/ft-sec.} \qquad K_{\phi\zeta} = -244 \text{ 1/ft-sec}^2$$

$$\frac{1}{2} Z_{\phi\phi} = -3.0 \text{ ft/sec}^2 \qquad \frac{1}{2} M_{\phi\phi} = -1.83 \text{ sec}^{-2} \qquad K_{\phi\theta} = -177 \text{ sec}^{-2}$$

$$\frac{1}{2} Z_{\theta\theta} = -171 \text{ ft/sec}^2 \qquad \frac{1}{2} M_{\zeta\zeta} = -54.6 \text{ 1/ft}^2\text{-sec}^2$$

$$Z_{\zeta\theta} = -130 \text{ sec}^{-2} \qquad M_{\zeta\theta} = -288 \text{ 1/ft-sec}^2.$$

The only terms remaining unspecified are the terms representing the external excitation. For a given model they will depend, in general, on the geometry of the waves and the heading of the model with respect to the direction of wave travel, denoted here by α. We shall measure α in such a way that $\alpha = 0$ corresponds to head seas, $\alpha = 90^\circ$ corresponds to waves coming from the starboard beam, and $\alpha = 180^\circ$ corresponds to following seas.

From the simplified analysis based on Mathieu's equation we may expect that for a given wave length, λ , and model heading, α , there will be certain values of ω , or equivalently, certain values of the models speed, u , for which the rolling motion will be unstable. We shall seek to determine this speed range for the following three cases: (i) λ is taken equal to L, the model length, and α assumes the values 15°, 30°, 45°, 60°, 75°, 105°, 120°, 135°, 150°, 165°; (ii) λ is taken equal to 1.5 L and α assumes the values 15°, 45°, 75°, 105°, 135°, 165°; (iii) λ is taken equal to 0.75 L and α assumes the same values as in case (ii). In all cases the wave height, 2A, is taken equal to $\lambda/40$.

The external heaving force and rolling and pitching moments produced by the waves were computed using the Froude-Krylov theory in conjunction with the "long wave approximation." The formulas used for these computations are presented in the Appendix and the values obtained are given in Table I. However, before these values may be substituted in (2.7) through (2.9) they must be divided by the apparent mass of the model in the case of heaving and the corresponding apparent mass moments of inertia in the case of pitching and rolling.

Using the above values for the coefficients the equations of motion (1.10) through (1.12) become

$$\ddot{z} = -79.4\,z - 3.51\,\dot{z} - 3.0\,\phi^2 - 171\,\theta^2 - 130\,z\theta - 7.95\,\theta + 2.32\,\dot{\theta} + Z_1\cos\omega t + Z_2\sin\omega t \tag{3.1}$$

$$\ddot{\theta} = -86.0\,\theta - 2.59\,\dot{\theta} - 288\,z\theta - 1.83\,\phi^2 - 54.6\,z^2 - 6.68\,z - 0.590\,\dot{z} + M_1\cos\omega t + M_2\sin\omega t \tag{3.2}$$

$$\ddot{\phi} = -24.4\,\phi - 0.348\,\dot{\phi} - 0.754\,\dot{\phi}|\dot{\phi}| - 244\,\phi z - 177\,\phi\theta + K_1\cos\omega t + K_2\sin\omega t \tag{3.3}$$

Table I.

Case (1): $\lambda = L$, $2A = \lambda/40$

$\alpha = 15^\circ$:	$\bar{K}_1 = 0.0172$ lb-ft.	$\bar{M}_1 = 4.95$ lb-ft.	$\bar{Z}_1 = 0.610$ lb.
	$\bar{K}_2 = 0.0122$ "	$\bar{M}_2 = 0.437$ "	$\bar{Z}_2 = -1.99$ "
$\alpha = 30^\circ$:	$\bar{K}_1 = 0.0350$ lb-ft.	$\bar{M}_1 = 5.25$ lb-ft.	$\bar{Z}_1 = 0.590$ lb.
	$\bar{K}_2 = 0.0230$ "	$\bar{M}_2 = 0.333$ "	$\bar{Z}_2 = -2.55$ "
$\alpha = 45^\circ$	$\bar{K}_1 = 0.0535$ lb-ft.	$\bar{M}_1 = 5.25$ lb-ft.	$\bar{Z}_1 = 0.615$ lb.
	$\bar{K}_2 = 0.0324$ "	$\bar{M}_2 = 0.056$ "	$\bar{Z}_2 = -3.64$ "
$\alpha = 60^\circ$	$\bar{K}_1 = 0.0685$ lb-ft.	$\bar{M}_1 = 4.48$ lb-ft.	$\bar{Z}_1 = 0.555$ lb.
	$\bar{K}_2 = 0.0326$ "	$\bar{M}_2 = -0.460$ "	$\bar{Z}_2 = -4.95$ "
$\alpha = 75^\circ$	$\bar{K}_1 = 0.0825$ lb-ft.	$\bar{M}_1 = 3.02$ lb-ft.	$\bar{Z}_1 = 0.374$ lb.
	$\bar{K}_2 = 0.0243$ "	$\bar{M}_2 = -0.830$ "	$\bar{Z}_2 = -5.95$ "
$\alpha = 105^\circ$	$\bar{K}_1 = 0.0825$ lb-ft.	$\bar{M}_1 = -3.02$ lb-ft.	$\bar{Z}_1 = -0.374$ lb.
	$\bar{K}_2 = -0.0243$ "	$\bar{M}_2 = -0.830$ "	$\bar{Z}_2 = -5.95$ "
$\alpha = 120^\circ$	$\bar{K}_1 = 0.0685$ lb-ft.	$\bar{M}_1 = -4.48$ lb-ft.	$\bar{Z}_1 = -0.555$ lb.
	$\bar{K}_2 = -0.0326$ "	$\bar{M}_2 = -0.460$ "	$\bar{Z}_2 = -4.95$ "
$\alpha = 135^\circ$	$\bar{K}_1 = 0.0535$ lb-ft.	$\bar{M}_1 = -5.25$ lb-ft.	$\bar{Z}_1 = -0.615$ lb.
	$\bar{K}_2 = -0.0324$ "	$\bar{M}_2 = 0.056$ "	$\bar{Z}_2 = -3.64$ "
$\alpha = 150^\circ$	$\bar{K}_1 = 0.0350$ lb-ft.	$\bar{M}_1 = -5.25$ lb-ft.	$\bar{Z}_1 = -0.590$ lb.
	$\bar{K}_2 = -0.0230$ "	$\bar{M}_2 = 0.333$ "	$\bar{Z}_2 = -2.55$ "
$\alpha = 165^\circ$	$\bar{K}_1 = 0.0172$ lb-ft.	$\bar{M}_1 = -4.95$ lb-ft.	$\bar{Z}_1 = -0.610$ lb.
	$\bar{K}_2 = -0.0122$ "	$\bar{M}_2 = 0.437$ "	$\bar{Z}_2 = -1.99$ "

Table I.

<u>Case (i)</u>: $\lambda = L$, $2A = \lambda/40$

$\alpha = 15^\circ$:	$\bar{K}_1 = 0.0172$ lb-ft.	$\bar{M}_1 = 4.95$ lb-ft.	$\bar{Z}_1 = 0.610$ lb.
	$\bar{K}_2 = 0.0122$ "	$\bar{M}_2 = 0.437$ "	$\bar{Z}_2 = -1.99$ "
$\alpha = 30^\circ$:	$\bar{K}_1 = 0.0350$ lb-ft.	$\bar{M}_1 = 5.25$ lb-ft.	$\bar{Z}_1 = 0.590$ lb.
	$\bar{K}_2 = 0.0230$ "	$\bar{M}_2 = 0.333$ "	$\bar{Z}_2 = -2.55$ "
$\alpha = 45^\circ$	$\bar{K}_1 = 0.0535$ lb-ft.	$\bar{M}_1 = 5.25$ lb-ft.	$\bar{Z}_1 = 0.615$ lb.
	$\bar{K}_2 = 0.0324$ "	$\bar{M}_2 = 0.056$ "	$\bar{Z}_2 = -3.64$ "
$\alpha = 60^\circ$	$\bar{K}_1 = 0.0685$ lb-ft.	$\bar{M}_1 = 4.48$ lb-ft.	$\bar{Z}_1 = 0.555$ lb.
	$\bar{K}_2 = 0.0326$ "	$\bar{M}_2 = -0.460$ "	$\bar{Z}_2 = -4.95$ "
$\alpha = 75^\circ$	$\bar{K}_1 = 0.0825$ lb-ft.	$\bar{M}_1 = 3.02$ lb-ft.	$\bar{Z}_1 = 0.374$ lb.
	$\bar{K}_2 = 0.0243$ "	$\bar{M}_2 = -0.830$ "	$\bar{Z}_2 = -5.95$ "
$\alpha = 105^\circ$	$\bar{K}_1 = 0.0825$ lb-ft.	$\bar{M}_1 = -3.02$ lb-ft.	$\bar{Z}_1 = -0.374$ lb.
	$\bar{K}_2 = -0.0243$ "	$\bar{M}_2 = -0.830$ "	$\bar{Z}_2 = -5.95$ "
$\alpha = 120^\circ$	$\bar{K}_1 = 0.0685$ lb-ft.	$\bar{M}_1 = -4.48$ lb-ft.	$\bar{Z}_1 = -0.555$ lb.
	$\bar{K}_2 = -0.0326$ "	$\bar{M}_2 = -0.460$ "	$\bar{Z}_2 = -4.95$ "
$\alpha = 135^\circ$	$\bar{K}_1 = 0.0535$ lb-ft.	$\bar{M}_1 = -5.25$ lb-ft.	$\bar{Z}_1 = -0.615$ lb.
	$\bar{K}_2 = -0.0324$ "	$\bar{M}_2 = 0.056$ "	$\bar{Z}_2 = -3.64$ "
$\alpha = 150^\circ$	$\bar{K}_1 = 0.0350$ lb-ft.	$\bar{M}_1 = -5.25$ lb-ft.	$\bar{Z}_1 = -0.590$ lb.
	$\bar{K}_2 = -0.0230$ "	$\bar{M}_2 = 0.333$ "	$\bar{Z}_2 = -2.55$ "
$\alpha = 165^\circ$	$\bar{K}_1 = 0.0172$ lb-ft.	$\bar{M}_1 = -4.95$ lb-ft.	$\bar{Z}_1 = -0.610$ lb.
	$\bar{K}_2 = -0.0122$ "	$\bar{M}_2 = 0.437$ "	$\bar{Z}_2 = -1.99$ "

Table I (Con't)

Case (ii): $\lambda = 1.5L$, $2A = \lambda/40$

$\alpha = 15^\circ$	$\bar{K}_1 = 0.0202$ lb-ft.	$\bar{M}_1 = 8.48$ lb-ft.	$\bar{Z}_1 = 0.913$ lb.
	$\bar{K}_2 = 0.00121$ "	$\bar{M}_2 = -0.236$ "	$\bar{Z}_2 = -7.05$ "
$\alpha = 45^\circ$	$\bar{K}_1 = 0.0580$ lb-ft.	$\bar{M}_1 = 7.18$ lb-ft.	$\bar{Z}_1 = 0.795$ lb.
	$\bar{K}_2 = 0.0254$ "	$\bar{M}_2 = -0.839$ "	$\bar{Z}_2 = -8.77$ "
$\alpha = 75^\circ$	$\bar{K}_1 = 0.0828$ lb-ft.	$\bar{M}_1 = 3.03$ lb-ft.	$\bar{Z}_1 = 0.334$ lb.
	$\bar{K}_2 = 0.0143$ "	$\bar{M}_2 = -1.49$ "	$\bar{Z}_2 = -10.8$ "
$\alpha = 105^\circ$	$\bar{K}_1 = 0.0828$ lb-ft.	$\bar{M}_1 = -3.03$ lb-ft.	$\bar{Z}_1 = -0.334$ lb.
	$\bar{K}_2 = -0.0143$ "	$\bar{M}_2 = -1.49$ "	$\bar{Z}_2 = -10.8$ "
$\alpha = 135^\circ$	$\bar{K}_1 = 0.0580$ lb-ft.	$\bar{M}_1 = -7.18$ lb-ft.	$\bar{Z}_1 = -0.795$ lb.
	$\bar{K}_2 = -0.0254$ "	$\bar{M}_2 = -0.839$ "	$\bar{Z}_2 = -8.77$ "
$\alpha = 165^\circ$	$\bar{K}_1 = 0.0202$ lb-ft.	$\bar{M}_1 = -8.48$ lb-ft.	$\bar{Z}_1 = -0.913$ lb.
	$\bar{K}_2 = -0.00121$ "	$\bar{M}_2 = -0.236$ "	$\bar{Z}_2 = -7.05$ "

Case (iii): $\lambda = 0.75L$, $2A = \lambda/40$

$\alpha = 15^\circ$	$\bar{K}_1 = 0.0126$ lb-ft.	$\bar{M}_1 = 2.28$ lb-ft.	$\bar{Z}_1 = 0.210$ lb.
	$\bar{K}_2 = 0.00906$ "	$\bar{M}_2 = 0.612$ "	$\bar{Z}_2 = -0.0840$ lb.
$\alpha = 45^\circ$	$\bar{K}_1 = 0.0472$ lb-ft.	$\bar{M}_1 = 3.36$ lb-ft.	$\bar{Z}_1 = 0.411$ lb.
	$\bar{K}_2 = 0.0322$ "	$\bar{M}_2 = 0.339$ "	$\bar{Z}_2 = -1.26$ "
$\alpha = 75^\circ$	$\bar{K}_1 = 0.0861$ lb-ft.	$\bar{M}_1 = 2.28$ lb-ft.	$\bar{Z}_1 = 0.308$ lb.
	$\bar{K}_2 = 0.0260$ "	$\bar{M}_2 = -0.572$ "	$\bar{Z}_2 = -3.74$ "

Table I (Con't.)

$\alpha = 105^\circ$	$\bar{K}_1 = 0.0861$ lb-ft.	$\bar{M}_1 = -2.28$ lb-ft.	$\bar{Z}_1 = -0.308$ lb.
	$\bar{K}_2 = -0.0260$ "	$\bar{M}_2 = -0.572$ "	$\bar{Z}_2 = -3.74$ "
$\alpha = 135^\circ$	$\bar{K}_1 = 0.0472$ lb-ft.	$\bar{M}_1 = -3.36$ lb-ft.	$\bar{Z}_1 = -0.411$ lb.
	$\bar{K}_2 = -0.0322$ "	$\bar{M}_2 = 0.339$ "	$\bar{Z}_2 = -1.26$ "
$\alpha = 165^\circ$	$\bar{K}_1 = 0.0126$ lb-ft.	$\bar{M}_1 = -2.28$ lb-ft.	$\bar{Z}_1 = -0.210$ lb.
	$\bar{K}_2 = -0.00906$ "	$\bar{M}_2 = 0.612$ "	$\bar{Z}_2 = -0.0840$ "

where use has also been made of (2.7) through (2.9).

Before proceeding to the explanation of the analogue simulation let us restate the assumptions which have been made in arriving at values for the various coefficients in the equations of motion.

1. The coefficients of the terms representing hydrodynamic forces and moments are constants equal to representative values obtained experimentally.

2. The waves are sinusoidal.

3. The magnitudes of the external forces and moments are obtained from the Froude-Krylov theory in conjunction with the "long wave approximation."

All of these assumptions seem justified since it is not our intention to give a detailed study of the motion of the Series 60, $C_B = 0.60$ ship model. Rather we are concerned with studying a basic phenomenon, and this model has been adopted only to arrive at realistic, if not completely accurate, values for the various terms appearing in the equations of motion.

Now that definite values have been chosen for the coefficients in the equations they may be simulated on the analogue computer, which is the subject of the next section.

4. Analogue Simulation.

In simulating a problem such as this on the analogue computer it is necessary that the output of any operational amplifier not exceed $\pm$ 100 volts. To satisfy this requirement, it is necessary to introduce scale factors between the physical variables and the machine variables (i.e. voltages)based on the estimated size of the former. From physical considerations we may state that the largest

value of $|z|$ to be expected is 1/6 ft., the largest value of $|\theta|$ to be expected is 1/5 radian, and the largest value of $|\phi|$ to be expected is 2 radians. Thus if we define

$$Z = 600\, z \qquad Y = 500\, \theta \qquad X = 50\, \phi \tag{4.1}$$

the machine variables X, Y, and Z will all be less than 100 volts in absolute value. Substituting (4.1) in (3.1) through (3.3) gives

$$\begin{aligned} \ddot{Z} = &-79.4 Z - 3.51 \dot{Z} - 0.720 X^2 - 0.411 Y^2 - 0.260 YZ \\ &-9.54 Y + 2.79 \dot{Y} + 600 Z_1 \cos \omega t + 6 Z_2 \sin \omega t \end{aligned} \tag{4.2}$$

$$\begin{aligned} \ddot{Y} = &-86.0 Y - 2.59 \dot{Y} - 0.48 YZ - 0.366 X^2 - 0.0758 Z^2 \\ &-5.57 Z - 0.492 \dot{Z} + 500 M_1 \cos \omega t + 500 M_2 \sin \omega t \end{aligned} \tag{4.3}$$

$$\begin{aligned} \ddot{X} = &-24.4 X - 0.348 \dot{X} - 0.0149 \dot{X} |\dot{X}| - 0.407 XZ \\ &-0.354 XY + 50 K_1 \cos \omega t + 50 K_2 \sin \omega t \end{aligned} \tag{4.4}$$

It is also convenient to have the absolute values of all the coefficients in the equations less than 1 which can be accomplished by a change of time scale defined by

$$T = 10t \tag{4.5}$$

where T is now the machine time and t is real time. After this change of variable we obtain the final equations

$$\begin{aligned} Z'' = &-0.794 Z - 0.351 Z' - \frac{0.720}{100} X^2 - \frac{0.411}{100} Y^2 - \frac{0.260}{100} YZ \\ &-0.0954 Y + 0.279 Y' + 6 Z_1 \cos \frac{\omega}{10} T + 6 Z_2 \sin \frac{\omega}{10} T \end{aligned} \tag{4.6}$$

$$\begin{aligned} Y'' = &-0.860 Y - 0.259 Y' - \frac{0.480}{100} YZ - \frac{0.366}{100} X^2 - \frac{0.0758}{100} Z^2 \\ &-0.0557 Z - 0.0492 Z' + 5 M_1 \cos \frac{\omega}{10} T + 5 M_2 \sin \frac{\omega}{10} T \end{aligned} \tag{4.7}$$

$$X'' = -0.244X - 0.0348X' - 0.0149X'|X'| - \frac{0.407}{100}XZ$$
$$- \frac{0.354}{100}XY + 0.5K_1\cos\frac{\omega}{10}T + 0.5K_2\sin\frac{\omega}{10}T \tag{4.8}$$

where primes denote differentiation with respect to T.

The simulation of these equations is done in accordance with the block diagram shown in Figure 3. The triangles represent phase inverters, the triangles with rectangles along one side represent summing integrators, the circles on the input sides of the integrators represent potentiometers, the initial conditions (if any) are shown above the integrators concerned, and the multiplication by a constant performed through each integrator or phase inverter is shown opposite the corresponding input. The computer used was a Berkeley Ease (Electronic Analogue Simulating Equipment) electronic analogue computer manufactured by Berkeley Division of Beckman Instruments, Inc., and is shown in Figure 4.

The simulation of a complex problem such as this on an analogue computer presents many opportunities for making errors, particularly in making the external connections into the patch bay of the computer, and since the solutions of equations (3.1) through (3.3) are not known, such errors may not be easily detectable. However, these equations contain equations (2.4) through (2.6) as a special case which may be recovered by setting certain nonlinear terms equal to zero. Since the stability of these latter equations is well established we may use that theory to check the validity of the simulation.

To do this the patch board was first wired to simulate equations (3.1) through (3.3) in accordance with the block diagram shown in Figure 3. Then appropriate coefficients were set equal to zero so that the resulting simulation was that of equations (2.4) through (2.6) except now definite values have been assumed for the coefficients. We then sought the values of ω for which the rolling was unstable.

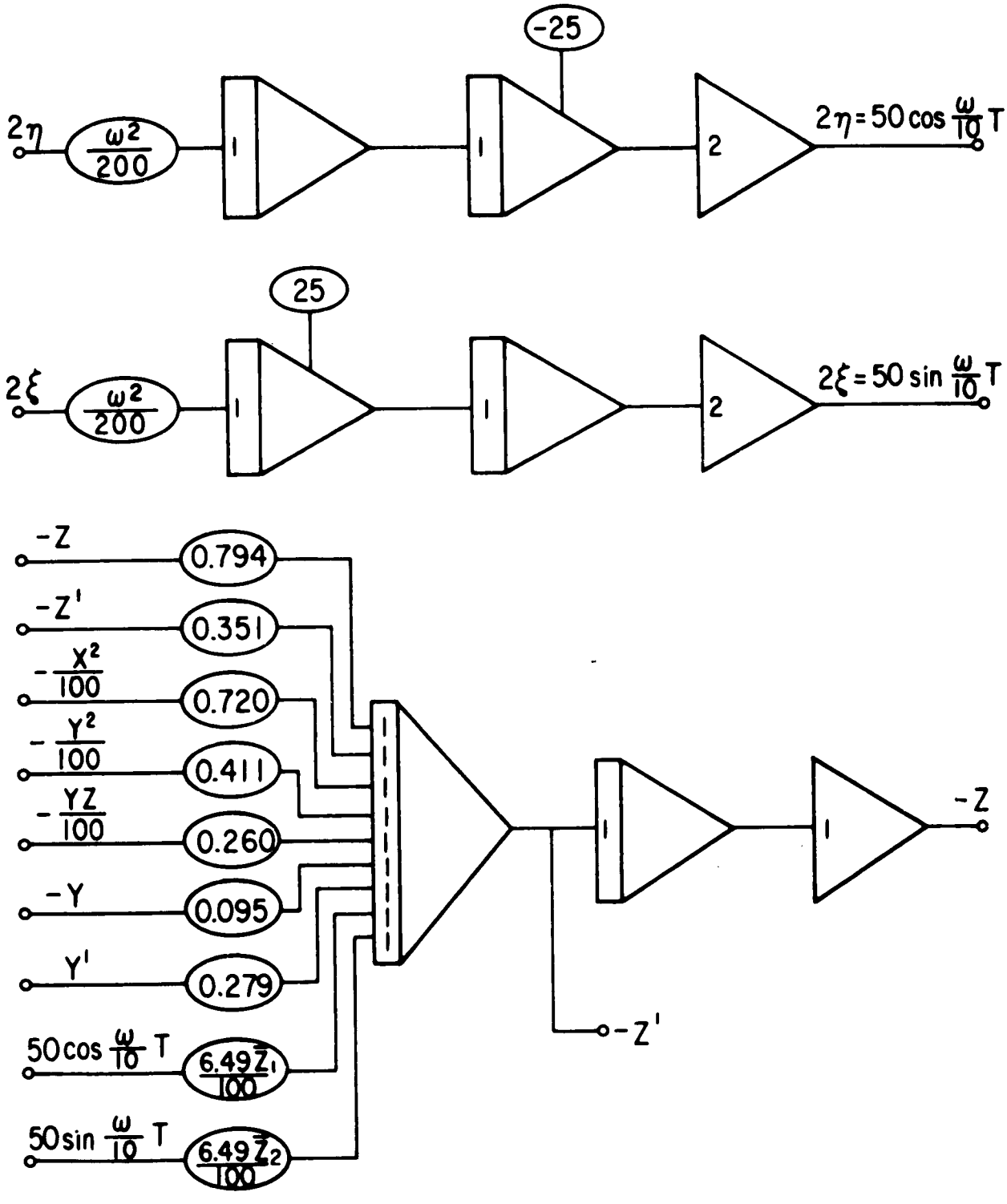

FIG. 3 BLOCK DIAGRAM FOR EQUATIONS (4.6), (4.7), (4.8)

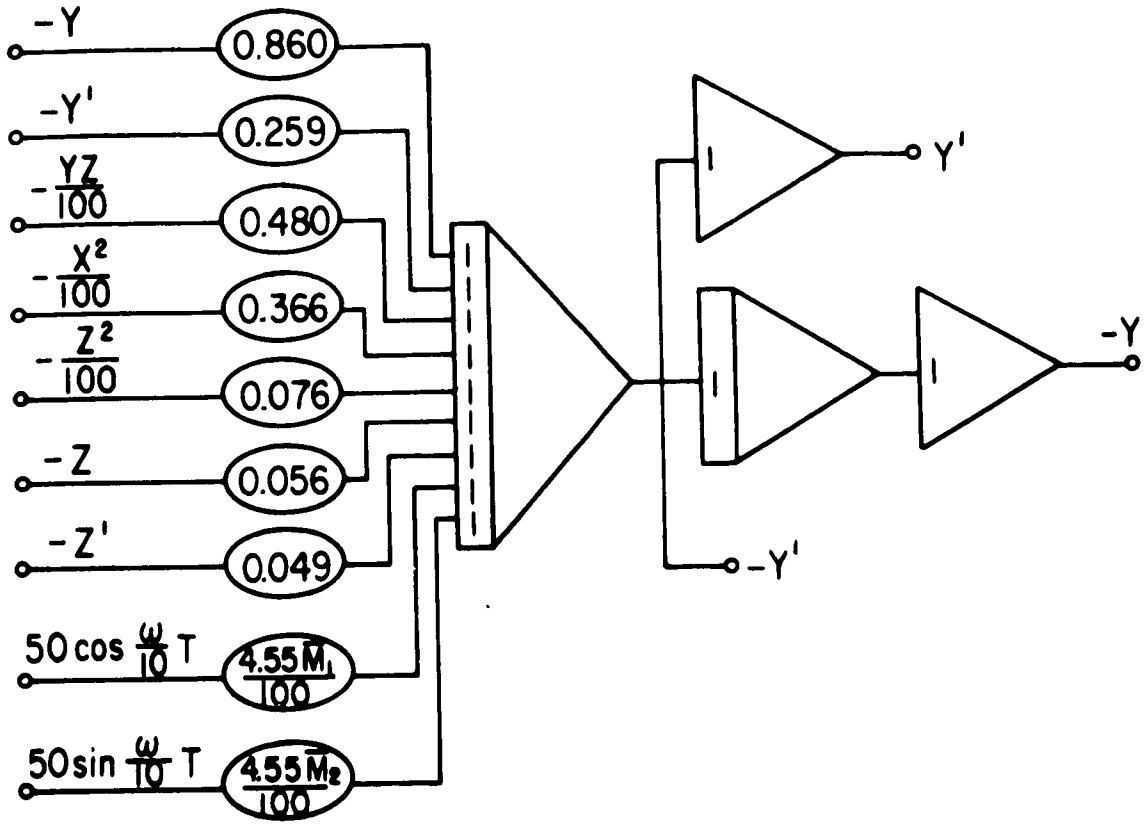

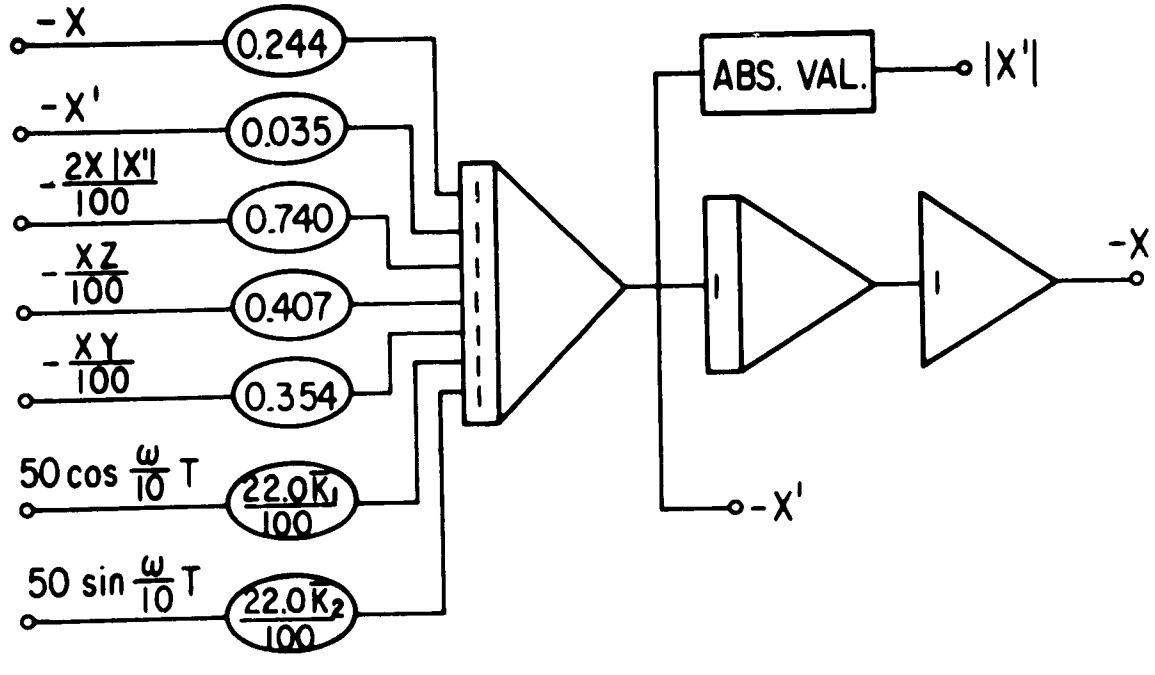

FIG. 3 (CONTINUED)

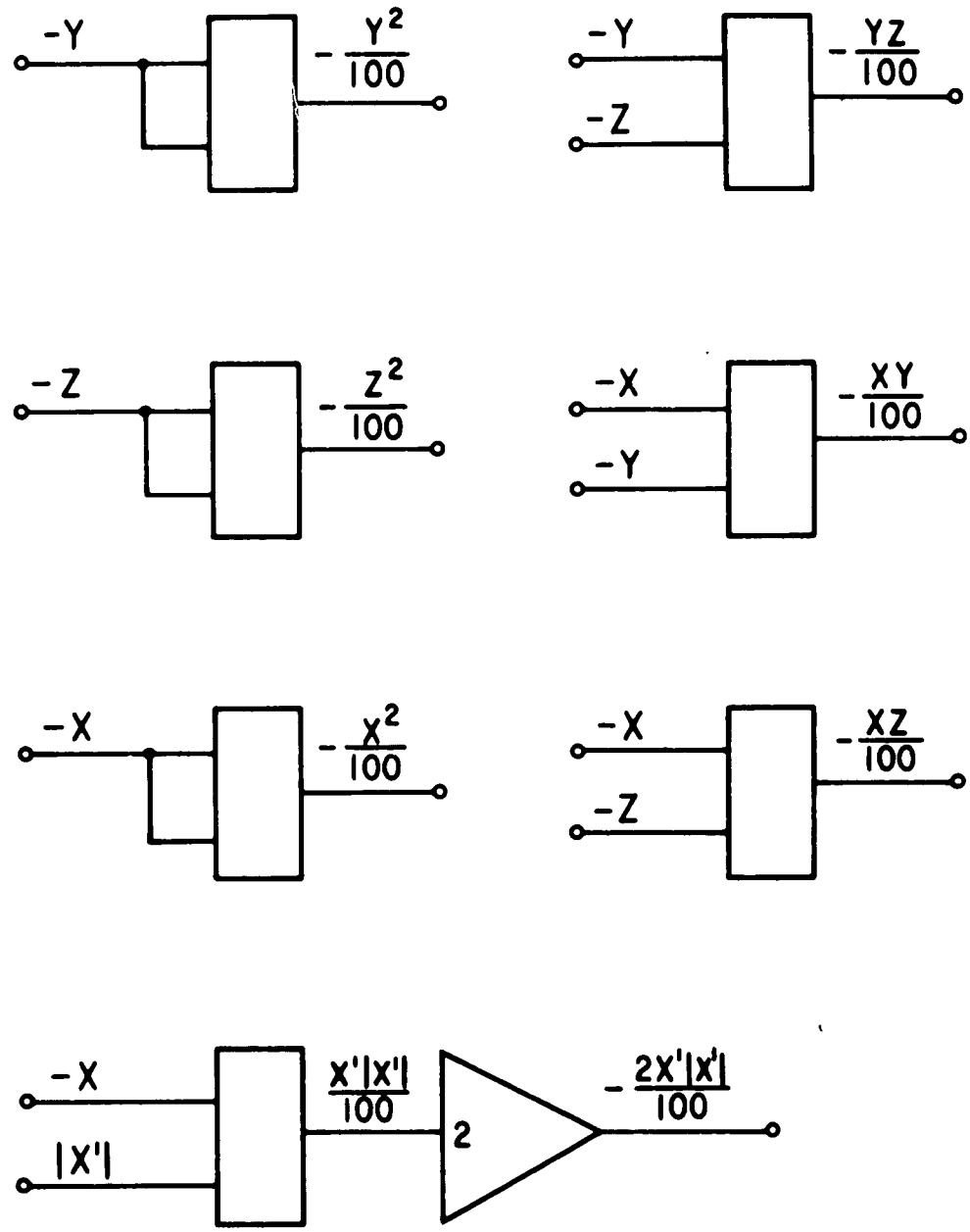

FIG. 3 (CONTINUED)

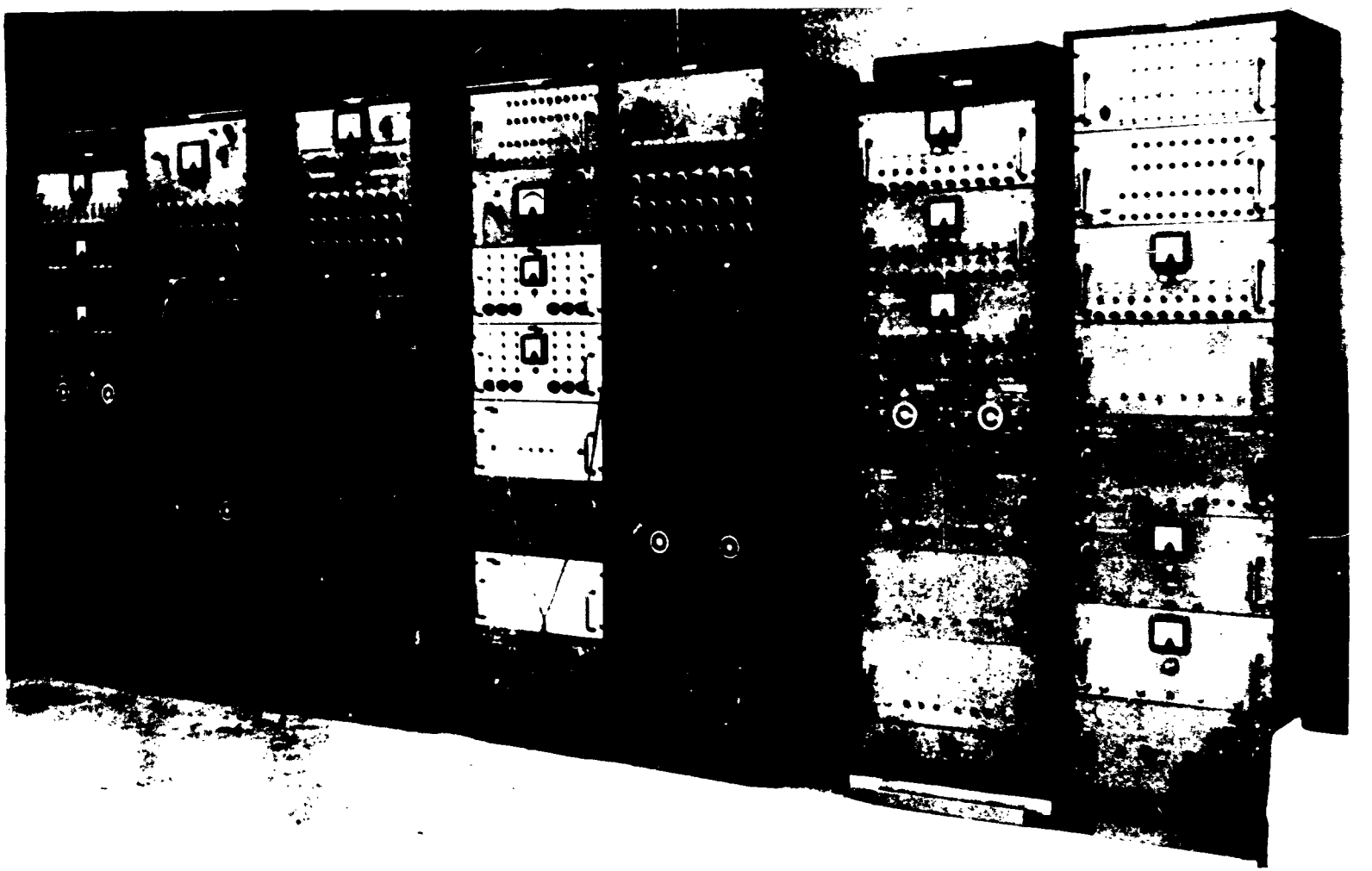

Figure 4 Berkeley EASE Electronic Analogue Computer

The case $\lambda = L$, $\alpha = 45^{\circ}$ was chosen for the computation and samples of the rolling response obtained for values of ω near the stability threshold are shown in Figure 5. It can be seen that near the threshold a small change in ω produced a large change in the character of the solution. The unstable solutions showed a sustained growth in amplitude which would have continued indefinitely.

It was found that the rolling motion was unstable for $8.28 < \omega < 10.5$ whereas the theory predicts unstable rolling for $8.26 < \omega < 10.6$. The error in the bounds of the range of ω for which the rolling was unstable obtained by the computer is less than 1% which seems to indicate that the basic network was correctly constructed. Therefore, it seems reasonable to conclude that the network will give the correct particular integrals of (3.1) through (3.3). The presentation and discussion of these integrals is the subject of the next section.

5. Computer Results.

It was found that for the cases where $\lambda = L$ and $\lambda = 0.75L$ the rolling response had the general appearance shown in Figure 6. It was found that for these two cases there was a range of exciting frequencies for each value of α for which the roll amplitude tended to grow, just as was observed for the solutions of the Mathieu equation shown in Figure 5. However, because of the second order damping term in the rolling equation the growth in amplitude did not continue indefinitely, but instead reached a steady-state value. Nevertheless, because of the similarity to the solutions of the Mathieu equation we will term such motion "unstable." To give some idea of the rolling amplitudes attained we refer to Figure 7 which

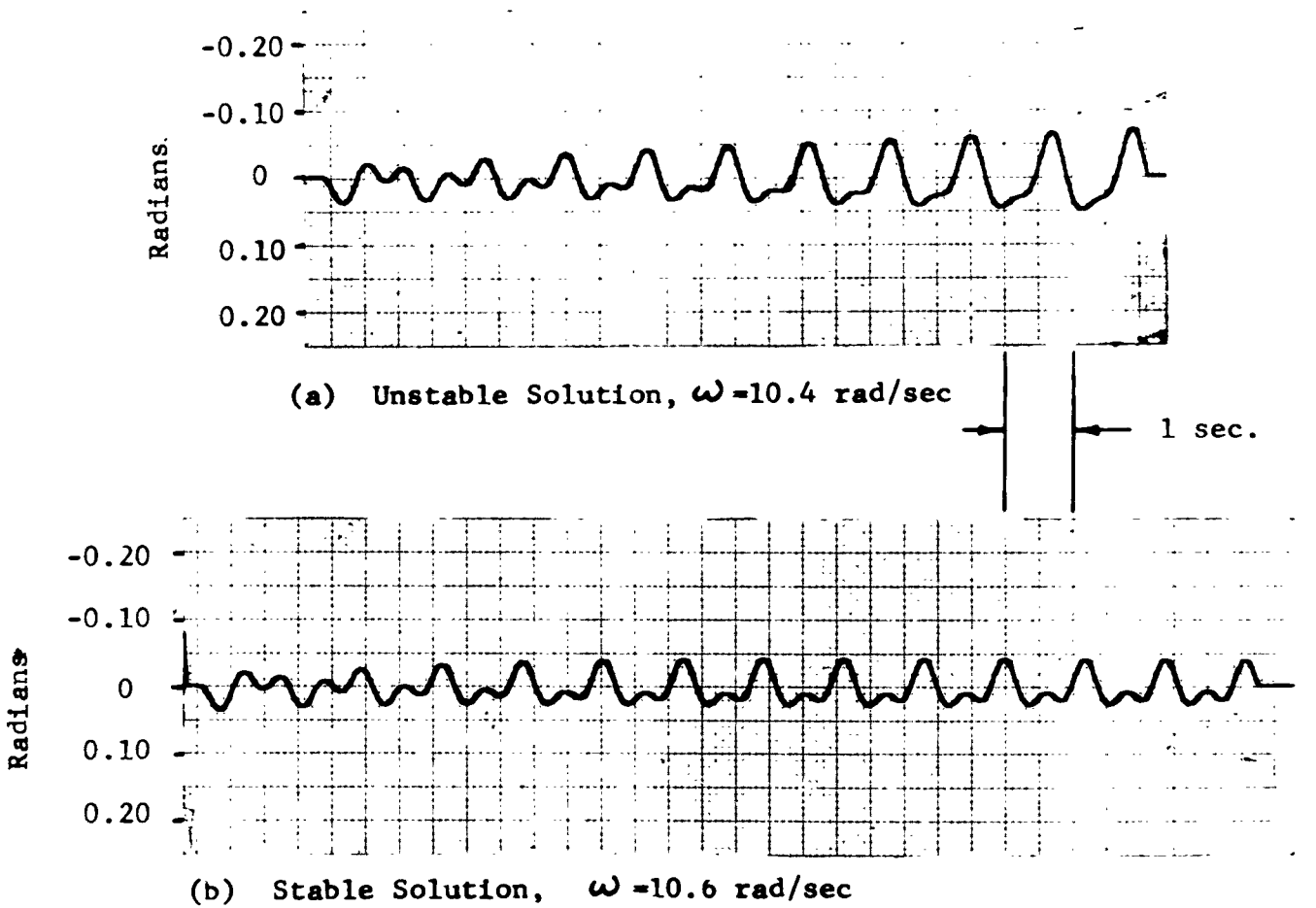

Figure 5 Rolling Response as Governed by Eqs. (2.4), (2.5), (2.6) for

$\lambda = L$, $\alpha = 45°$, $2A = \lambda/40$

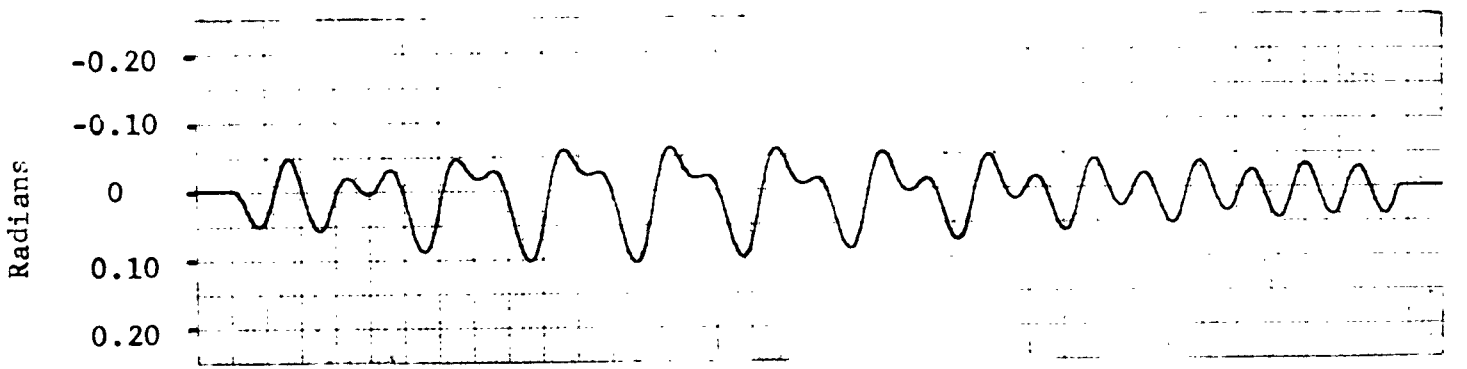

(c) Stable Solution, ω =8.15 rad/sec

1 sec.

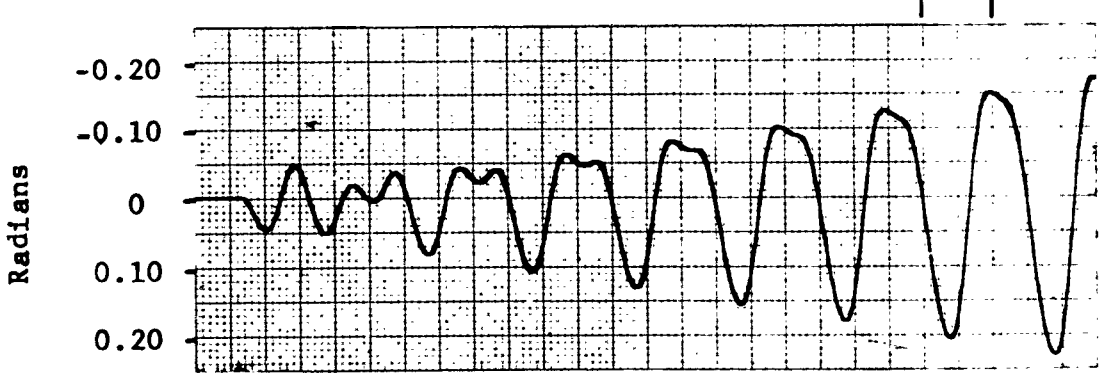

(d) Unstable Solution, ω =8.34 rad/sec

Figure 5 (cont.) Rolling Response as Governed by Eqs. (2.4), (2.5), (2.6) for

λ=L, α =45°, 2A= λ/40

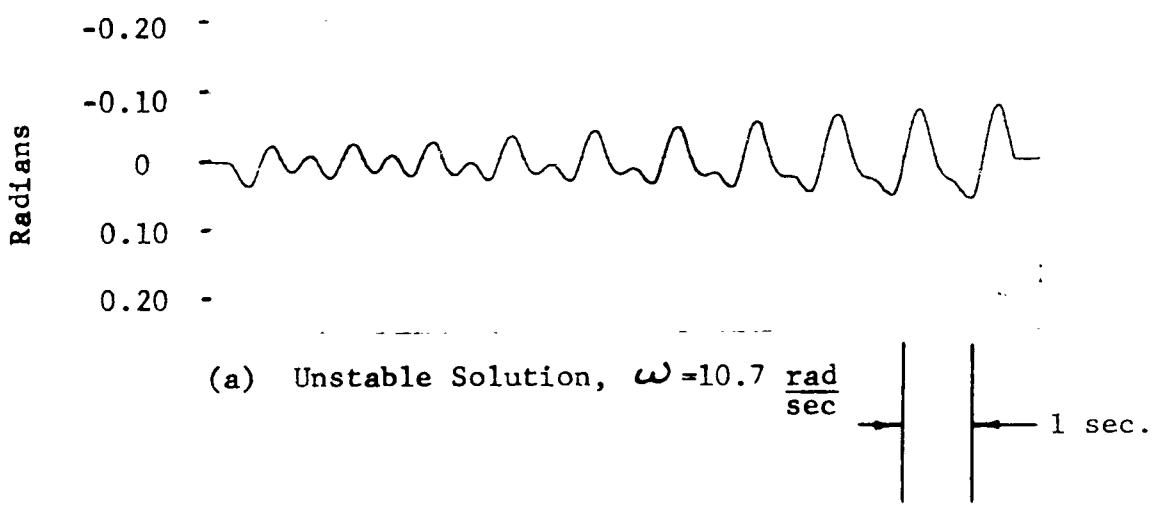

(a) Unstable Solution, ω =10.7 $\frac{\text{rad}}{\text{sec}}$

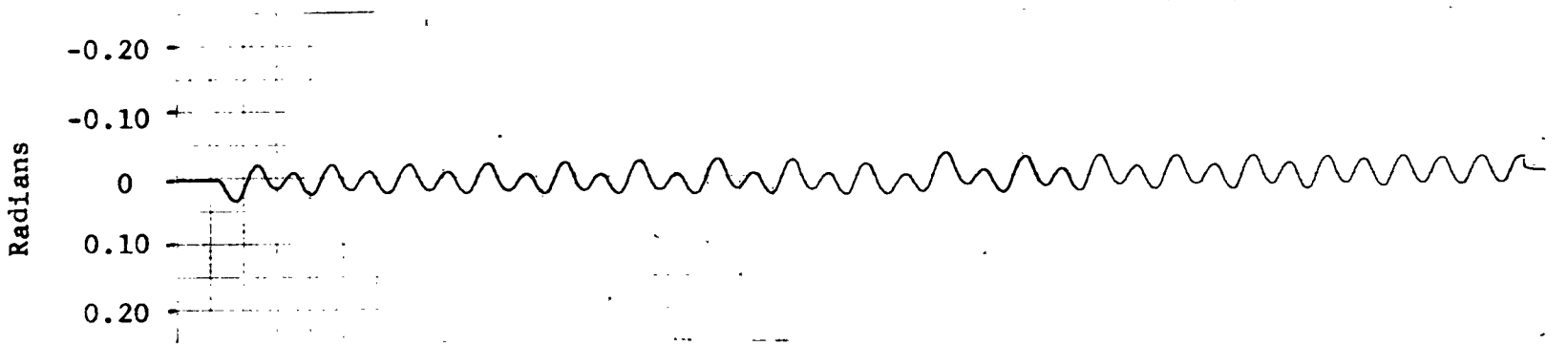

(b) Stable Solution, ω =10.8 rad/sec

Figure 6 Rolling Response for λ=L, α=45°, 2A= λ/40

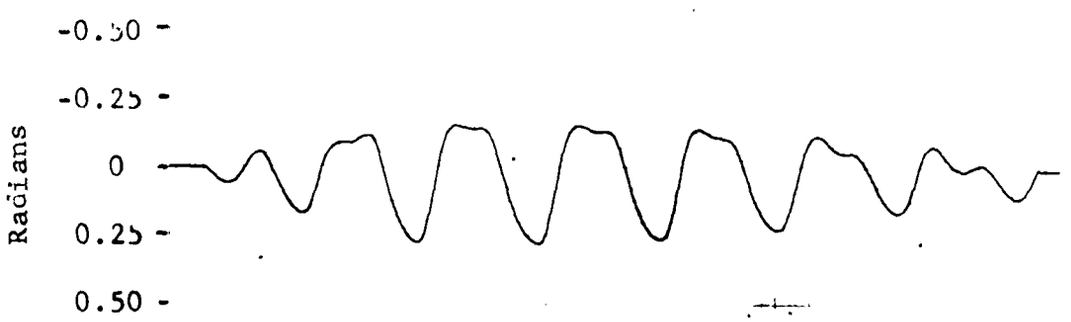

(c) Stable Solution,
ω =7.02 rad/sec

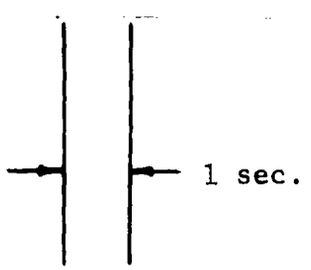

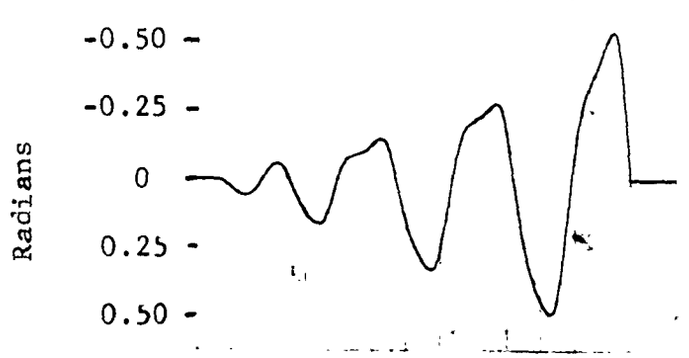

(d) Unstable Solution,
ω =7.16 rad/sec

Figure 6 (cont.) Rolling Response for λ=L, α=45°, 2A= λ/40

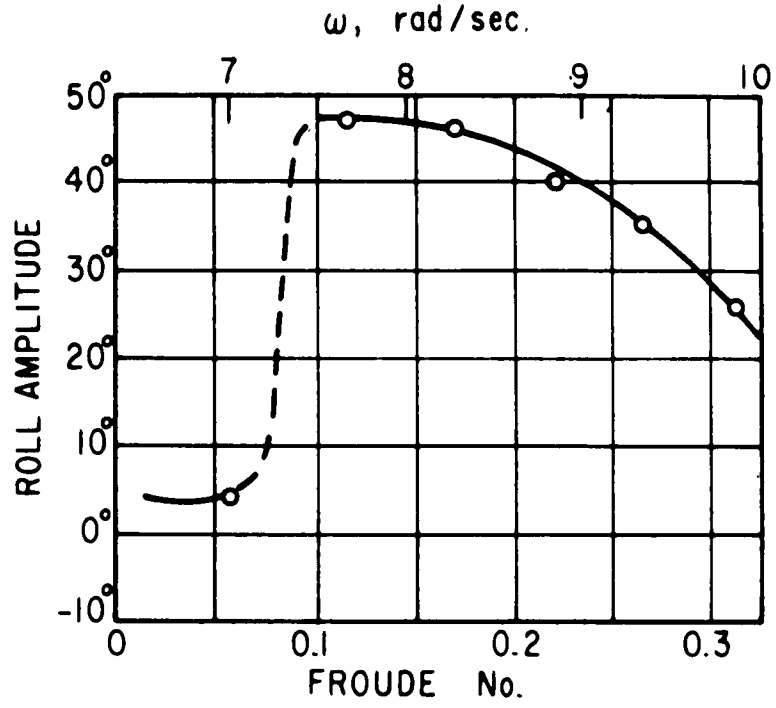

FIG. 7 ROLLING AMPLITUDE AS A FUNCTION OF ω FOR $\lambda = L$, $\alpha = 45°$, $2A = \lambda/40$

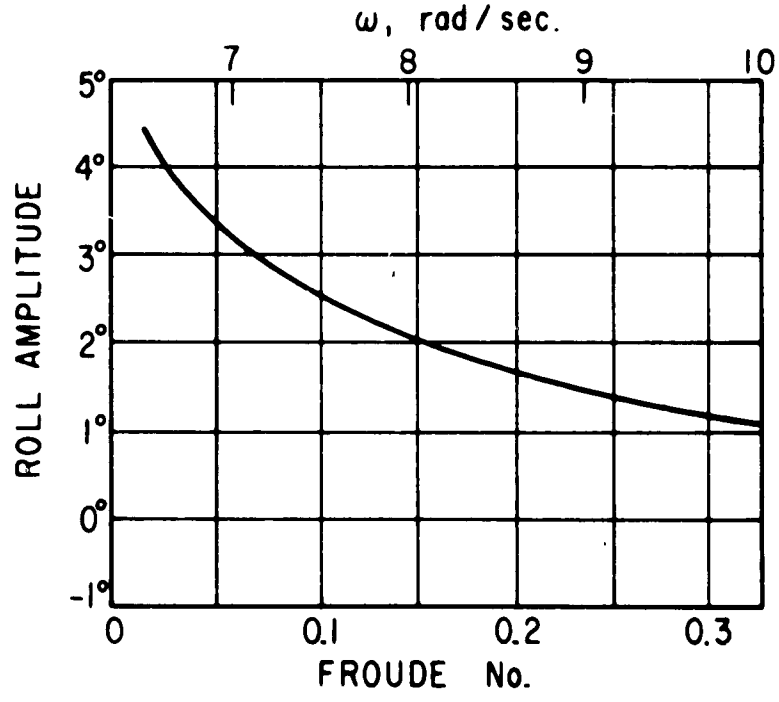

FIG. 8 ROLLING AMPLITUDE COMPUTED FROM LINEAR THEORY FOR $\lambda = L$, $\alpha = 45°$, $2A = \lambda/40$

shows the maximum amplitude as a function of ω and Froude number for $\alpha = 45^{\circ}$ and $\lambda = L$, and for comparison the same curve is plotted in Figure 8 in which the rolling amplitude was calculated using linear theory.

Although the rolling response did exhibit the instabilities just described for $\lambda = L$ and $\lambda = 0.75L$, they did not occur at values of ω predicted by the theory based on the inhomogeneous Mathieu equation, which is not surprising considering the assumptions made in that development. Instead the unstable regions were found to be much broader, in general, than those predicted by that theory, as may be seen by Table 2, which shows the comparison for the special case $\lambda = L$, $2A = \lambda/40$. Nevertheless, as may be seen, the instabilities did occur for values of ω_ϕ/ω in the neighborhood of 1/2 as the theory predicts.

For the case where $\lambda = 1.5$ L the rolling response was found to be quite different from that obtained for $\lambda = L$ and $\lambda = 0.75$ L, as may be seen by Figures 9 and 10. Because of the very large roll angles obtained the motions found in this case are very difficult to interpret physically since the equations of motion are no longer valid. Nevertheless, the results are interesting since they clearly show the effect of the nonlinear terms when the displacements are large.

The solutions obtained showed, in general, that for each heading of the model with respect to the direction of wave travel there were values of ω for which the rolling was unstable. The model's speed corresponding to these values of ω was then found from the following equation

Table II

α	(I)	(II)
15°	$0.486 < \frac{\omega_\phi}{\omega} < 0.535$	$0.454 < \frac{\omega_\phi}{\omega} < 0.672$
30°	$0.476 < \frac{\omega_\phi}{\omega} < 0.562$	$0.463 < \frac{\omega_\phi}{\omega} < 0.692$
45°	$0.466 < \frac{\omega_\phi}{\omega} < 0.597$	$0.463 < \frac{\omega_\phi}{\omega} < 0.700$
60°	$0.455 < \frac{\omega_\phi}{\omega} < 0.630$	$0.458 < \frac{\omega_\phi}{\omega} < 0.714$
75°	$0.447 < \frac{\omega_\phi}{\omega} < 0.653$	$0.455 < \frac{\omega_\phi}{\omega} < 0.700$

(I): Range of ω_ϕ/ω for which solutions to the Mathieu equation (2.6) are unstable.

(II): Range of ω_ϕ/ω for which solutions to equation (3.3) are unstable.

In both cases $\lambda = L$, $2A = \lambda/40$.

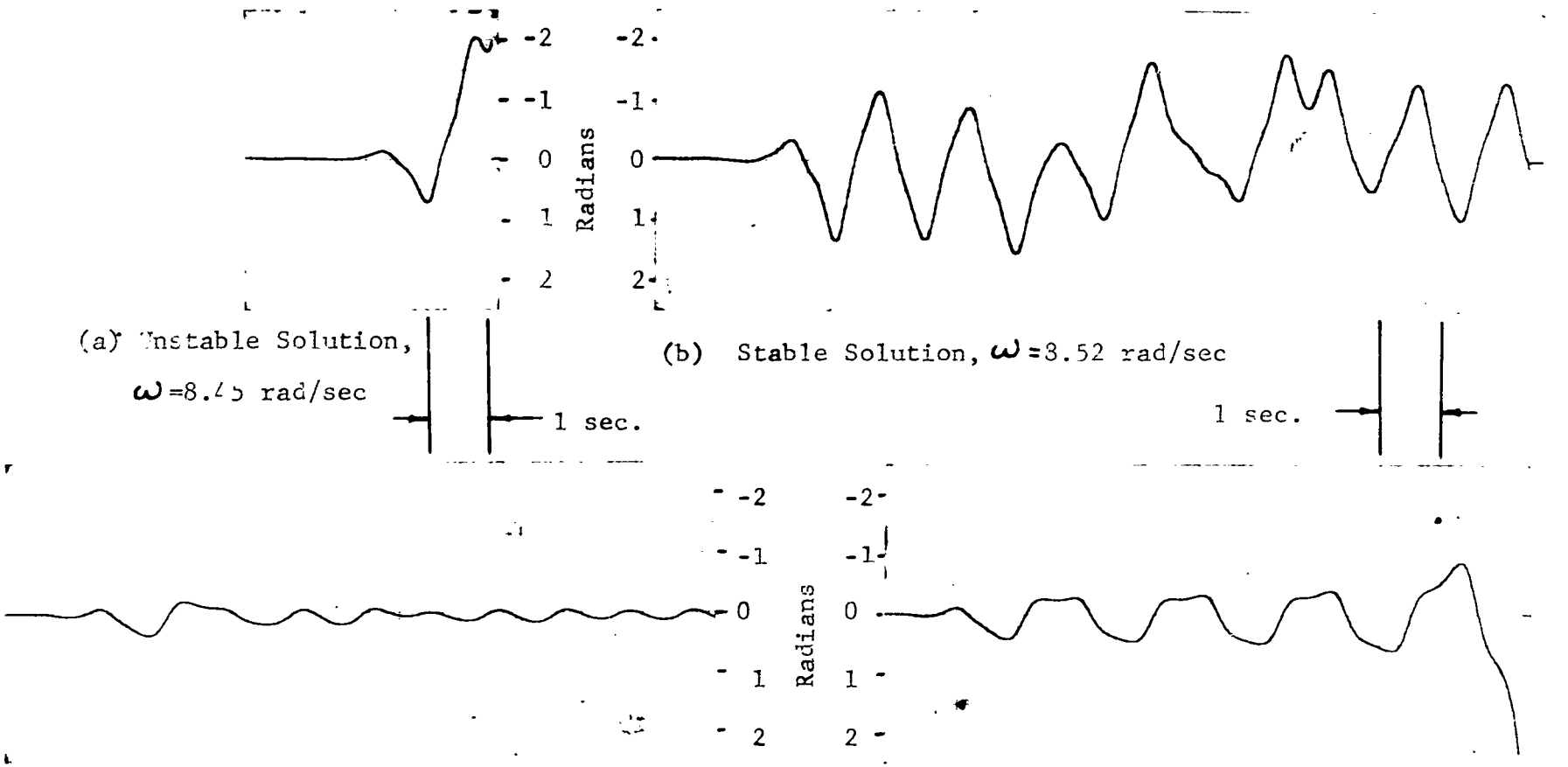

(a) Unstable Solution, ω=8.45 rad/sec

(b) Stable Solution, ω=3.52 rad/sec

(c) Stable Solution, ω=5.87 rad/sec

(d) Unstable Solution, ω=5.96 rad/sec

Figure 9 Rolling Response for λ=1.5L, α=15°, 2A= λ/40

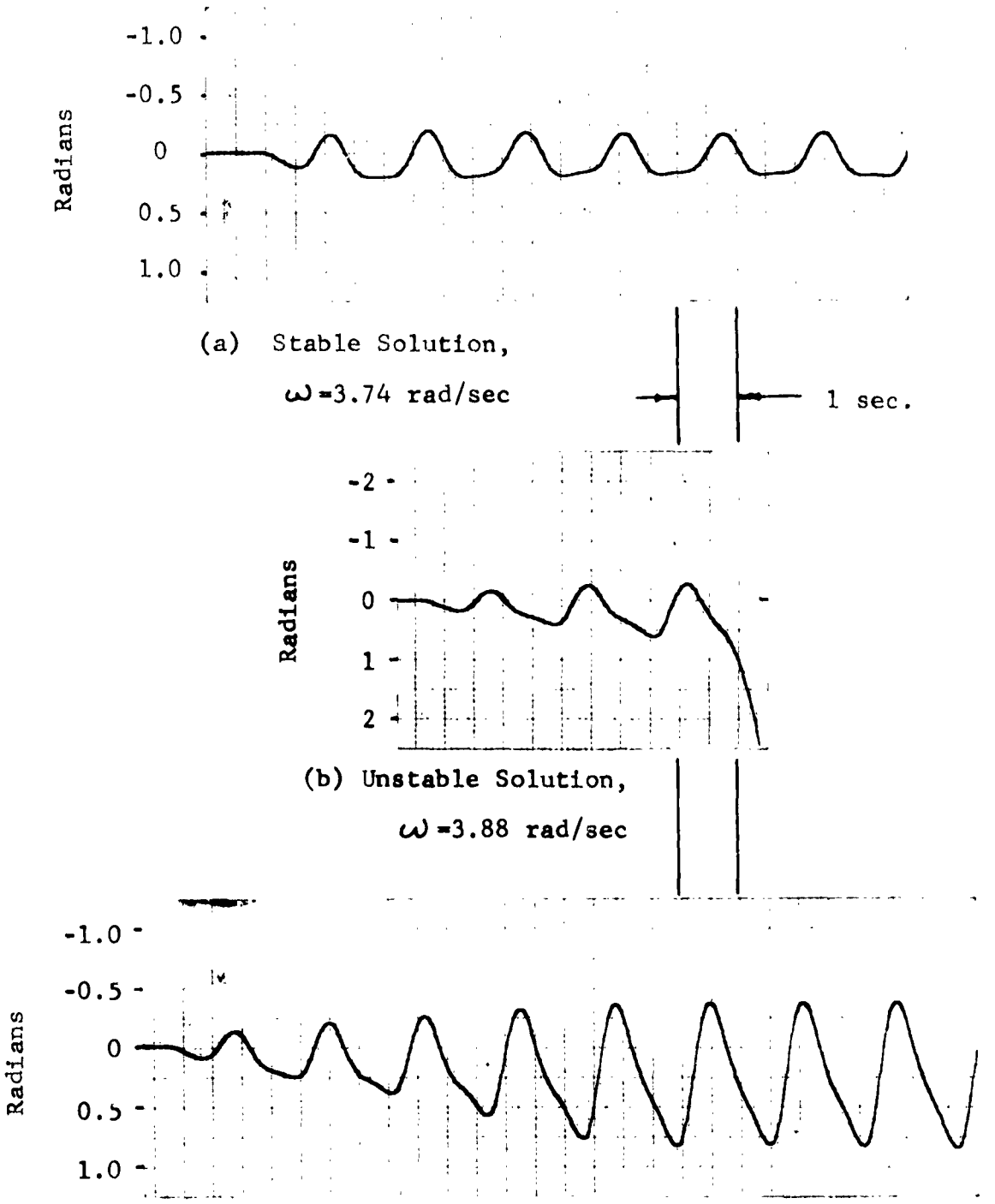

(c) Stable Solution, ω=4.00 rad/sec.

Figure 10 Rolling Response for λ=1.5L, α=105°, 2A= λ/40

$$u = \frac{1}{\cos\alpha}\left(\frac{\lambda}{2\pi}\omega - v_w\right)$$

where v_w is the velocity of gravity waves given by

$$v_w = \sqrt{\frac{g\lambda}{2\pi}}$$

The results of the stability study may be found in Figures 11 and 12 which show, for each value of α, the range of Froude numbers for which the rolling was found to be unstable. For Froude numbers between 0 and 0.35 it was found that the rolling motion was always stable for values of $\alpha \geq 105^\circ$ for the cases where $\lambda = L$ and $\lambda = 0.75$ L, and hence these parts of Figure 11 are omitted.

In addition to the growth in amplitude, the unstable rolling motions had the unusual characteristic that the period of the steady-state response had a value equal to <u>twice</u> the period of wave encounter, while the stable motions had a period equal to the period of the external excitation. This is clearly seen in Figure 13 (a) and (b). In the former the period of wave encounter, T, corresponding to $\omega = 8.84$ rad/sec. is 0.711 sec. while from the motion record the period of roll is found to be 1.4 secs. In the latter, the value of T corresponding to $\omega = 7.01$ rad/sec. is 0.897 secs. while from the motion record the period is found to be 0.9 sec. Figure 6 (b) shows an example of a rolling response near the threshold of the unstable region where the time between alternate large rolls is again equal to twice the period of wave encounter. We will have more to say about this phenomenon in the next section.

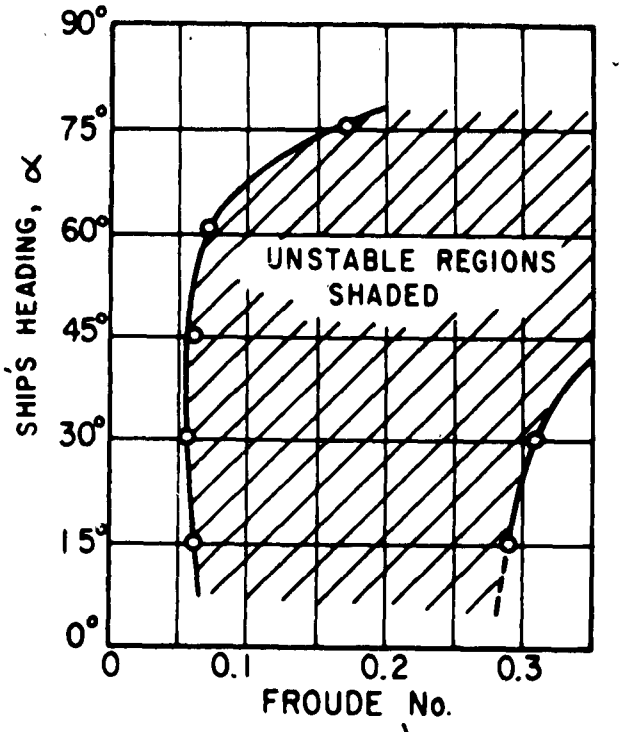

(a) $\lambda = L$, $2A = \lambda/40$

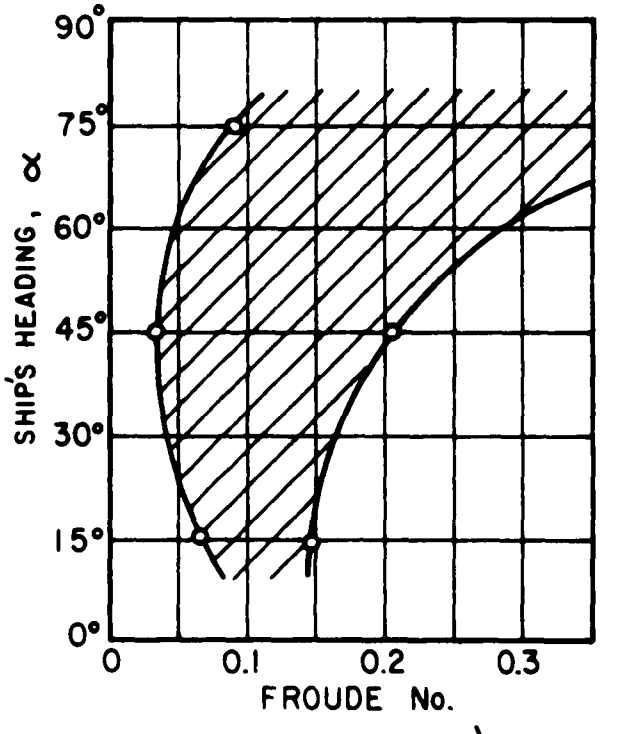

(b) $\lambda = 0.75L$, $2A = \lambda/40$

FIG. 11 RANGE OF FROUDE No's FOR WHICH ROLL IS UNSTABLE

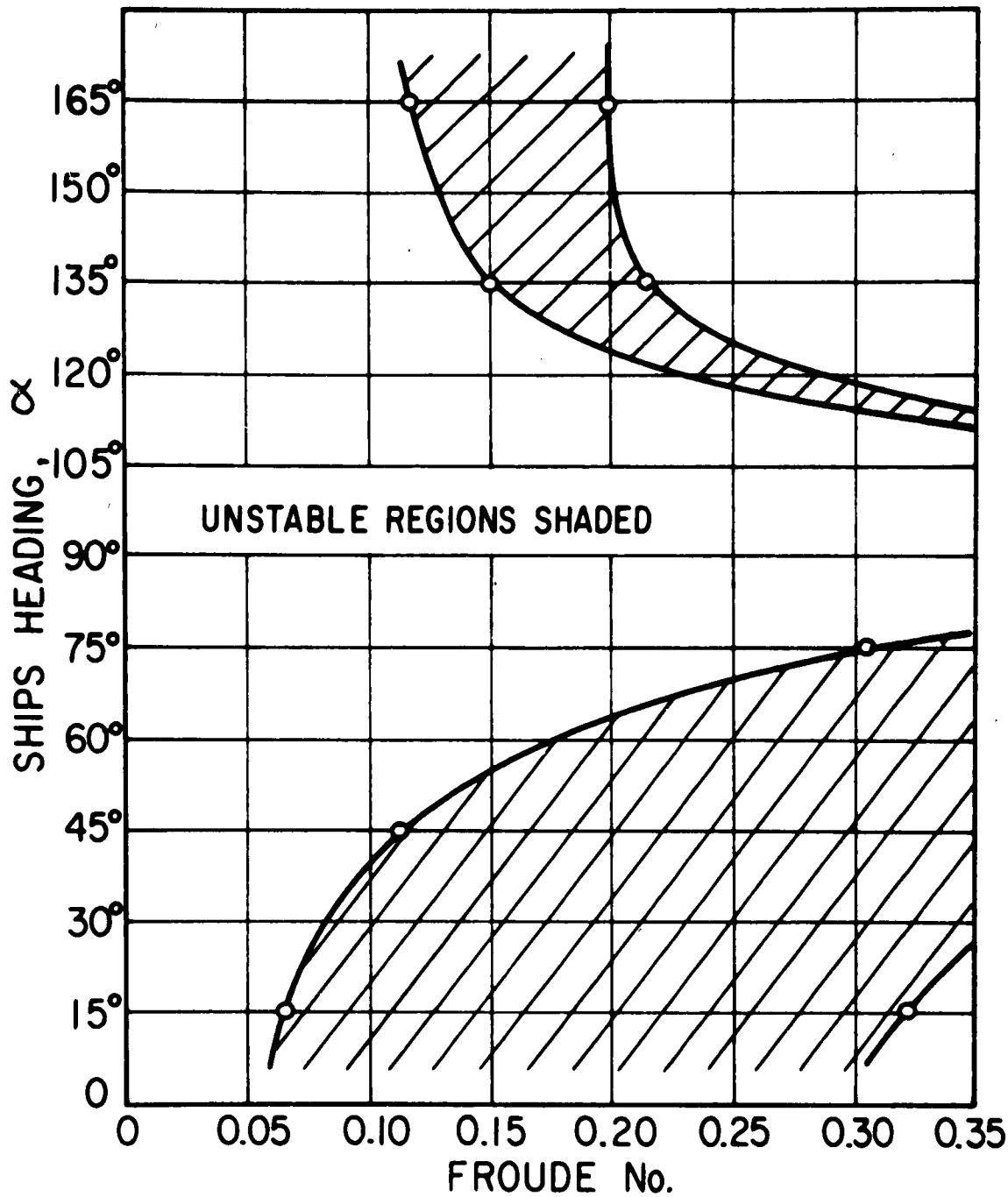

FIG. 12 RANGE OF FROUDE No's FOR WHICH ROLL IS UNSTABLE

$\lambda = 1.5L$, $2A = \lambda/40$

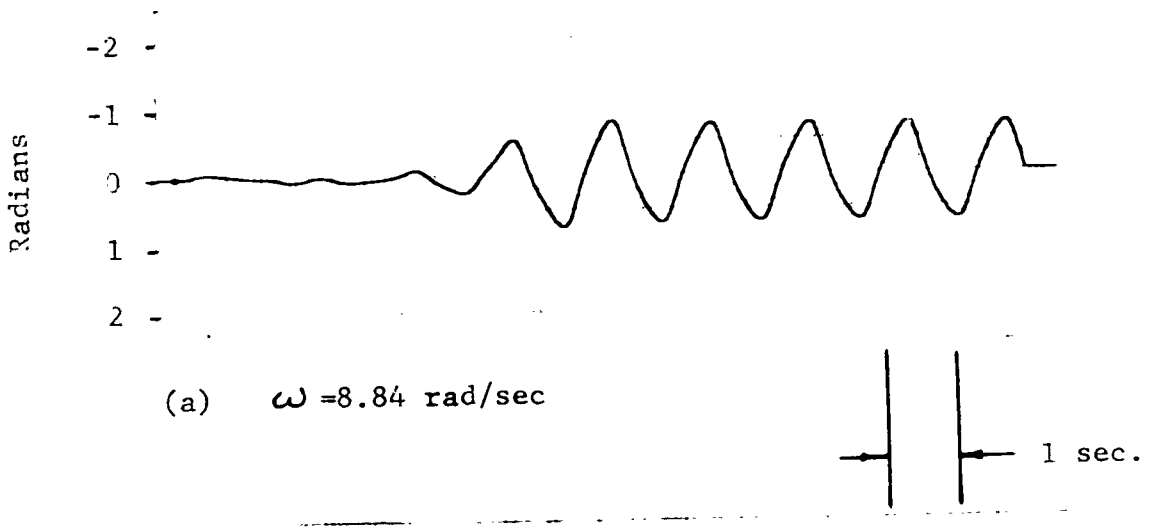

(a) ω =8.84 rad/sec

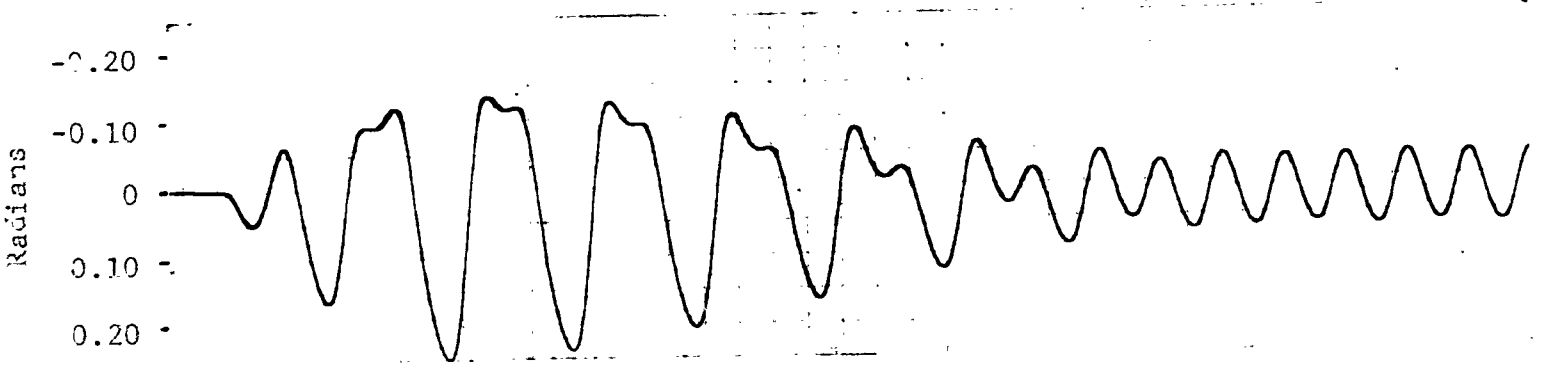

(b) ω =7.01 rad/sec

Figure 13 Rolling Response for λ=L, α=45°, 2A= λ/40

6. Discussion and Conclusions.

We have seen that when the frequency of wave encounter, ω , is in the neighborhood of twice the natural frequency in roll, ω_ϕ , the rolling response has the following two distinctive characteristics: (1) the amplitude tends to grow to a large but finite value, and (2) the period of the steady-state response is equal to twice the period of the excitation. This behavior cannot emerge from, nor can it be studied in, a linear analysis. For if all the nonlinear terms are neglected, the equation of motion for roll is no longer coupled with those for heave and pitch, and is linear. One is then led to the conclusions that large roll amplitudes may be expected only when the exciting frequency is near the natural rolling frequency, the resonance condition, and that in any case the frequency of the steady-state response is equal to the frequency of the excitation. Therefore, we see that the inclusion of the second order static coupling terms, which are known to exist, in the equations of motion produces a rolling behavior which is in direct contradiction to that predicted by linear theory. However, in this study we are dealing only with solutions to certain differential equations, and whether or not the rolling motion of an actual ship moving in oblique waves would exhibit such behavior depends upon how well those equations approximate the true equations of motion, a question which can only be answered by model experiments.

Some experiments with Series 60 models moving in oblique waves have recently been performed, the results of which may be found in [11] and [12]. The results show that in bow seas the roll amplitude was always of the order of 5° for Froude numbers between 0 and 0.4,

which does not conform with our results shown in Figure 7. However, the discrepancy may be attributable to two main factors. First of all, in deriving the equations of motion it was assumed that all motions are small in the sense that third order terms may be neglected, and therefore, for such large roll angles the validity of those equations is questionable. It seems apparent from the computer study that within a certain range of Froude numbers the rolling motion may tend to become large, but how large is difficult to say at this point. Secondly, the models used in the experiments described in [11] were all equipped with bilge keels, and in both studies the waves used in the experiments were not very severe. (In [11] and [12] the wave heights were taken equal to $\lambda/50$ and $\lambda/48$ respectively). Therefore, it seems likely that the damping in roll was too large compared to the wave excitation to produce unstable rolling.

On the other hand, rolling motions in which the response had a period equal to twice the period of wave encounter were observed during the experiments reported in [12], where a recorded rolling motion is presented (Figure 24 of that paper) that very closely resembles that shown in Figure 6 (b) of this paper. In connection with this, Lewis and Numata state that such rolling motions were observed when the period of wave encounter was approximately one half the natural period in roll. However, they also point out that in other cases where the two periods did have this relationship, normal records were obtained. No definite explanation for this behavior is given there, but based on the computer study we are in a position to offer an explanation.

First of all it is evident from this investigation that the presence of the nonlinear static coupling between heave, pitch, and

roll is sufficient (provided the damping in roll is not too large) to cause such behavior and that no motions other than these need to be involved. Secondly, we have found that such behavior is a property of an unstable or nearly unstable rolling motion as we have defined. Now, for unstable rolling to occur it is necessary but not sufficient, that the frequency of wave encounter be in the neighborhood of twice the natural rolling frequency. Whether or not unstable rolling actually occurs depends upon the relative strength of the excitation compared to the damping in roll. This then explains why in one case a "normal" rolling behavior and in another case an "abnormal" rolling behavior can be observed even when in both cases the frequency of wave encounter is in the neighborhood of twice the natural rolling frequency. If the rolling is unstable, then it exhibits a period equal to twice the period of wave encounter, which as a consequence is nearly equal to the natural period.

To be completely accurate, the "erratic" rolling motion obtained by Lewis and Numata does not satisfy our definition of unstable rolling since the amplitude is not increasing and shows no tendency to do so and hence the above explanation is not strictly applicable. In fact it is not quite periodic so it is meaningless to speak of its period as being twice the period of excitation. However, it does closely resemble the computer solution shown in Figure 6 (b), and therefore we may discuss it with reference to that solution.

As may be seen the solution in Figure 6 (b) is classified as stable but is very near the stability threshold. Furthermore, the initial portion of the solution is almost periodic, the time between the alternate large rolls being precisely twice the period of the excitation. However, this behavior is transient and gradually dies

out leaving a steady state response which is periodic, the period being equal to the period of the excitation. The close resemblance of the above mentioned rolling motion to this solution seems to indicate that what Lewis and Numata actually observed was the transient portion of a rolling motion which was very near the stability threshold, the transient being almost periodic with period equal to twice the period of wave encounter and which as a consequence was nearly equal to the natural period.

The investigation described in this paper can only be considered as an initial step in the investigation of the effect of nonlinear static coupling on the rolling stability of a ship moving in oblique waves. However, it does suggest a possible area of study for those experimentors engaged in the testing of models in waves.

APPENDIX

Formulas for the calculation of the coefficients of the terms involving the displacements in the equations of motion are presented in [1]. Those which depend only on the geometry of the submerged volume are

$$\bar{Z}_z = -\rho g A_W$$

$$\bar{Z}_\theta = \bar{M}_z = \rho g A_W x_F$$

$$Z_{z\theta} = -2\rho g \int_{-l_2}^{l_1} x \frac{\partial y}{\partial z} dx$$

where A_W is the area of the equilibrium water plane, x_F is the x-coordinate of the center of flotation, ρ is the density of the water, and $\partial y/\partial x$ is the slope of the top sides at the water line (positive for tumblehome). The remaining coefficients depend on the location of the center of gravity as well as the geometry of the submerged volume and are given by[1]

$$\bar{K}_\phi = -\Delta G M_T$$

$$\bar{M}_\theta = -\Delta G M_L = -\rho g I_L + \Delta z_B$$

$$\bar{K}_{\phi z} = 2\rho g \int_{-l_2}^{l_1} b^2(x) \frac{\partial y}{\partial z} dx + \rho g z_W A_W$$

$$\bar{K}_{\phi\theta} = -2\rho g \int_{-l_2}^{l_1} x\, b^2(x) \frac{\partial y}{\partial z} dx - \rho g z_W A_W x_F$$

$$\bar{M}_{z\theta} = 2\rho g \int_{-l_2}^{l_1} x^2 \frac{\partial y}{\partial z} dx + \rho g z_W A_W$$

---

[1] Several sign errors were made in the derivation of these formulas in [1] which have now been corrected.

where I_L is the moment of inertia of the equilibrium water plane about the y-axis, z_B is the z-coordinate of the center of buoyancy, z_w is the z-coordinate of the point where the z-axis cuts the equilibrium water plane, and b(x) is the half breadth of the equilibrium water plane.

For these computations we chose GM_T to be 5% of the beam or 0.40". From the geometry of the submerged volume we found for this model that BM_T = 1.51" and that the center of buoyancy was 1.46" from the water plane. Thus

$$z_w = 1.51'' - (0.40'' + 1.46'') = -0.35'' = -0.0292'$$

and

$$z_B = -0.35'' + 1.46'' = 1.11'' = 0.0925'$$

Now all that remains to evaluate these coefficients is to perform the numerical integrations.

The heaving force and the rolling and pitching moments produced by the waves were calculated from the following formulas

$$\bar{Z}_1 = -A\rho g \int_{-\ell_2}^{\ell_1} [2b(x) - kS(x)] \sin k_1 x \, dx$$

$$\bar{Z}_2 = -A\rho g \int_{-\ell_2}^{\ell_1} [2b(x) - kS(x)] \cos k_1 x \, dx$$

$$\bar{M}_1 = A\rho g \int_{-\ell_2}^{\ell_1} \left\{ x[2b(x) - kS(x)] \sin k_1 x - k_1 \cos k_1 x \int_{z_w}^{z_k} 2yz\,dz \right\} dx$$

$$\bar{M}_2 = A\rho g \int_{-\ell_2}^{\ell_1} \left\{ x[2b(x) - kS(x)] \cos k_1 x + k_1 \sin k_1 x \int_{z_w}^{z_k} 2yz\,dz \right\} dx$$

$$\bar{K}_1 = A\rho g k_2 \int_{-\ell_2}^{\ell_1} \left[\tfrac{2}{3} b^3(x) - \int_{z_w}^{z_k} 2yz\,dz - z_w S(x) \right] \cos k_1 x \, dx$$

$$\bar{K}_2 = -A\rho g k_2 \int_{-\ell_2}^{\ell_1} \left[\tfrac{2}{3} b^3(x) - \int_{z_w}^{z_k} 2yz\,dz - z_w S(x) \right] \sin k_1 x \, dx$$

where

$S(x)$ = station area

$K = 2\pi/\lambda$

A = wave amplitude

z_k = vertical offset of the base line

$K_1 = K \cos\alpha$

$K_2 = K \sin\alpha$

REFERENCES

1. Paulling, J. R., and Rosenberg, R. M., "On Unstable Ship Motions Resulting from Nonlinear Coupling", Journal of Ship Research Vol. 3, No. 1, pp. 36-46.

2. Kinney, W. D., "On the Normal Modes of Nonlinear Coupled Ship Motions and Their Stability", Institute of Engineering Research Publication, University of California, Series 173, Issue 5, August 1962.

3. Hsu, C. S. "Instability of Ship Motions in Longitudinal Waves Resulting from Nonlinear Coupling", Institute of Engineering Research Publication, University of California, Series 173, Issue 1, May 1961.

4. Hsu, C. S. "On a Restricted Class of Coupled Hill's Eqs. and Some Applications", Institute of Engineering Research Publication, University of California, Series 173, Issue 2, June 1961.

5. Kinney, W. D., "On the Unstable Rolling Motions of Ships Resulting from Nonlinear Coupling with Pitch Including the Effect of Damping in Roll", Institute of Engineering Research Publication, University of California, Series 173, Issue 3, October 1961.

6. Stoker, J. J., "Nonlinear Vibrations in Mechanical and Electrical Systems", Interscience Publishers, Inc., New York, N. Y., 1950.

7. McLachlan, Theory and Application of Mathieu Functions, Oxford University Press, 1947.

8. Kotowski, Gertrude, "Lösungen der Inhomogenen Mathieuschen Differentialgleichungen mit periodischer Störfunktion beliebeger Frequenz," Zeitschrift fur angewandte Mathematik und Mechanik, Vol. 23, pp. 213-299, 1948.

9. Gerritsma, I. J., "Ship Motions in Longitudinal Waves", International Ship Building Progress, Vol. 7, February 1960.

10. Principles of Naval Architecture, Edited by H. E. Rossell and L. B. Chapman, Published by the Society of Naval Architects and Marine Engineers, Vol. 2, 1949, pg. 20.

11. Vossers, G., Swaan, W. A., and Rijken, H. "Experiments with Series 60 Models in Waves", Transactions of the Society of Naval Architects and Marine Engineers, Vol. 68, 1960. pp. 364-450.

REFERENCES (Con't)

12. Lewis, E. V., and Numata, E., "Ship Motions in Oblique Seas", Transactions of the Society of Naval Architects and Marine Engineers, Vol. 68, 1960, pp. 510-547.

13. Kauderer, K., Nichtlineare Mechanik, Springer-Verlag, Berlin-Gottingen-Heidelberg, 1958.