RESEARCH REPORT

DEPARTMENT OF CIVIL ENGINEERING

PRINCETON UNIVERSITY

PRINCETON, NEW JERSEY

$19.75

ANALYSIS AND DESIGN OF DOLPHINS,

Final Report To
The Bureau of Yards and Docks
Department of the Navy
Washington, D.C.

by

Werner E. Schmid, Associate Professor
of Civil Engineering
David G. Elms, Assistant in Research
Bruno M. Carioti and Robert C. Peace,
Graduate Assistants in Research

Project No.
C-3

Contract No.
NBy-37595

April 1, 1963

Department of Civil Engineering
Princeton University
Princeton, New Jersey

Contents

SUMMARY

by

Werner E. Schmid
Associate Professor of Civil Engineering

April 1963

Dolphins assist the safe maneuvering, berthing and mooring of ships on rivers and in harbors. Although often small and inconspicuous, they are nonetheless important waterfront structures that present intriguing problems to the designing engineer. A dolphin has two functions: to withstand the continuous pull of a moored ship and to absorb kinetic energy from a ship that strikes it. The former requires high strength, whereas the latter calls for a structure that is sufficiently flexible and resilient at high load to provide a large energy absorption capacity. To resolve this strength vs. flexibility paradox is one of the problems that has to be faced by the designer. It can best be done if the structural behavior of a dolphin is clearly understood.

A further difficulty confronting the designer is presented by the fact that often the information regarding the soil conditions at the site is scarce or of questionable reliability if it exists at all, yet soil conditions, of course, most profoundly influence the behavior of a dolphin.

In the past it has been customary in the United States to use mainly one type of dolphin, the creosoted timber (Greenheart) pile cluster dolphin of various standard designs such as the 7, 19, or 30-pile dolphin in a circular

arrangement or the 16-pile dolphin arranged in a square as detailed in the "Mooring Guide" of the U.S. Bureau of Yards and Docks. Recent developments abroad have led to the proposal for or introduction of various new types of dolphins that are claimed to be more economical and in some instances have performed very satisfactorily.

It is the purpose of this report to assess these developments and present a balanced judgment on their merit to provide guide lines for the future development of dolphin design and construction.

This report has three parts. The main body is a M.Sc. Thesis, "Dolphin Design," by Messrs. Bruno Carioti, David Elms and Robert Peace, which discusses in detail the principles and considerations that enter into the problem of designing dolphins. This Thesis is also a broad review of the "state of the art." It discusses the various types of dolphins and brings together the experience in their design, their construction, and in their service behavior that has been reported but is widely scattered in the literature. The Thesis also demonstrates various methods of analysis for dolphins and reports on the scant prototype test data that are available. A second part of this report is a Paper, "The Structural Action of Timber Pile Cluster Dolphins," by David Elms and Werner Schmid. This Paper presents a generalized theory in matrix formulation for the structural analysis of a pile cluster dolphin having n piles. The

theory is evaluated for dolphins in water depths of 20, 40 and 60 feet and for three timber pile cluster dolphins of 7, 19 and 30 piles that correspond to the standard dolphin design suggested by the "Mooring Guide." This evaluation was carried out using an IBM 650 computer and was so programmed that with a few minor changes the computer could find the force distribution for a pile cluster of any number of piles. The results are shown in the diagrams as a function of the failure load (pull out value) of a single pile in tension.

Finally, the results of the Thesis and Paper are evaluated and synthesized in this summary which, besides underscoring the important findings, offers some suggestions regarding new and promising designs.

General Considerations

As mentioned previously, the two important design criteria for a dolphin are strength and energy absorption capacity. The ideal dolphin not only will sustain the static loads imposed but also will, when struck in a collision, deflect sufficiently at high loads and temporarily absorb the energy exchanged in the collision.

In our rapidly developing technological society, new engineering materials and processes are continuously made available and introduced, such as new metals, epoxies, rubbers, etc., and it appeared advisable initially to review the possible use of all kinds of materials. However, cost and environmental considerations (e.g. corrosion of aluminum in a marine environment) soon reduced the materials to concrete, prestressed concrete, structural steel and the various kinds of high strength steels. Since load is directly related to stress, the static strength of a dolphin is directly proportional to the allowable stress and, since the energy absorption $W = \int P dx$ where P is the load and x the deflection of the dolphin (both of which are again directly proportional to the allowable stress), the energy absorption capacity will vary with the square of the allowable stress. On the basis of static load capacity in bending, high strength steel is naturally superior to structural steel and in declining effectiveness follow Greenheart piles, prestressed concrete and reinforced concrete. Because of

the low bending stresses allowable for concrete and even prestressed concrete piles, the only effective way of using them in dolphin structures is by subjecting them mostly to normal stress. This leads to very rigid structures and if any energy absorption is required it largely has to be accomplished by a high energy absorbing fender system. This requirement makes concrete dolphins rather impractical and expensive. The materials thus remaining are the various steels and Greenheart timber piles.

A dolphin may consist of a single structural element such as a single steel tube of large diameter or a sheet pile cell or, on the other hand, it may be composed of several structural elements that are somehow connected, such as a pile cluster or a bundle of steel pipes. Multi-member dolphins may have their elements raked, in which case the horizontal load is mostly carried by direct (axial) stresses. If all piles in a dolphin are parallel and vertical, horizontal loads are largely carried by bending stresses. The latter arrangement is considerably more flexible than the former and hence does offer more energy absorption capacity.

In general the effectiveness of a dolphin is best established by its load-deflection diagram. This diagram shows the static strength of a dolphin as well as its energy absorption capacity. The latter being the integral $W = \int P dx$ is given by the area under the P-x curve. The ideal dolphin would have a load deflection curve as shown in Fig. 1 with a

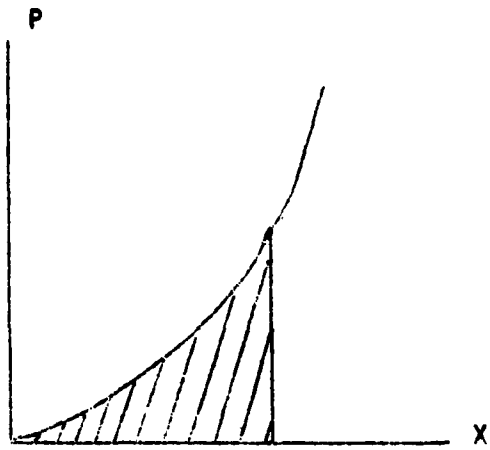

Fig. 1

Ideal Load-Deflection Diagram for Dolphins

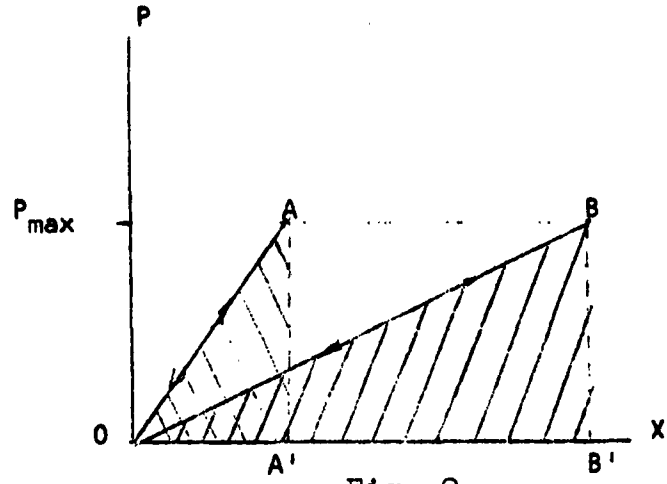

Fig. 2

Energy Absorption Capacity as a Function of Maximum Deflection

very soft initial response and a gradual stiffening of the reaction offered by the dolphin. With increasing deflection the energy absorbed increases rapidly. Such grossly non-linear behavior, however, is usually not achieved with ease. Also, the determination of the P-x diagram in such a case would be more cumbersome because the principle of superposition breaks down. Fig. 2 shows the more normal, linear behavior of two dolphins of equal static strength. The diagram demonstrates that a dolphin with a load-deflection diagram OB and a static strength P_{max} has an energy absorption capacity given by the area OBB' which is several times the energy capacity of the dolphins with equal strength P_{max} and with a load-deflection diagram OA and an energy absorption capacity proportional to the area OAA'. Generally

then, if there are two dolphins of equal strength the one with the higher flexibility would be preferable because of its superior energy absorption capacity. A dilemma for the designer often results because increasing the strength usually causes higher stiffness and hence a reduction in energy absorption capacity and vice versa.

Types of Dolphins

(1) Timber Pile Cluster Dolphins

As mentioned earlier, the dolphins most frequently used in the United States are the pile cluster dolphins. These dolphins are usually built by driving Greenheart piles vertically in the designed pattern and with distances that will result in the proper inclination. The pile tops are then pulled together and wrapped tight with wire rope.

The analysis of the structural action of these pile trestles showed a number of very interesting results. If one assumes a complete and perfect connection at the top (i.e. no relative movement of one pile top with respect to any other), the pile group becomes exceedingly stiff and the energy absorption capacity very low. This is supported by the empirical observation that the wrapping of the top of these dolphins soon gets loose with a corresponding loss in overall strength but, up to a certain point, with considerable increase in energy absorption capacity. Of course, if

excessive loosening of the wrapping occurs both strength as well as energy absorption capacity decline. It is indeed one of the most frequent tasks of maintaining these dolphins that the blocking and wrapping has to be replaced. The analysis also showed that by introducing a slight shear flexibility at the pile top, the axial force and the moment would be significantly reduced in the most heavily stressed piles and P_{max} as well as E for a dolphin would be significantly increased (see Figs. 3-24 to 3-27). Finally, the structural analysis showed that the extreme piles in the plane of the external force sustained the highest loads. While this was predictable and expected, the degree of this load concentration in the outer piles was a surprise. In the example of the 19-pile dolphin shown in the Paper by Elms and Schmid (Fig. 7), the outer piles (Nos. 1 & 5) carry twice the axial load and three times the shear of the piles with the next highest loads (Nos. 2 & 4). Note that all these piles are in the plane of the load and all other piles have, except for moments, negligible loads. Thus it appears that when such a dolphin is loaded mainly those piles in or almost in the plane of the load are working, while the others are required only because the direction in which a ship may strike or pull at a dolphin is not known and, hence, the plane of loading is indeterminate. As a consequence of this unequal distribution, an individual pile is very easily overloaded and may often yield or fail. In addition, the

geometric arrangement of the pile clusters makes it possible that an individual pile alone is subjected to high impact forces from a smaller craft before the dolphin as a whole will deflect and therefore this pile is overstressed and fails. Besides these disadvantages, there is the susceptibility to marine borer attack which requires special protection or frequent replacement. Greenheart piles also come with limited length and thus for the larger water depths a large number of piles is required. There is a definite limit up to which timber piles can be used and at the larger water depths buckling of the most heavily loaded compression pile may become critical rather than the pull-out of the pile subject to the highest tension.

Besides these considerations, there are however a number of factors that speak in favor of the timber pile dolphin. The material is relatively cheap, abundant and easy to obtain. It stands up well in the marine environment if borers are absent. Timber piles are easily driven unless firm lenses or layers of sand, gravel or rock are encountered. The pile cluster dolphins have accumulated quite a respectable record of performance through the years.

It is believed that the most useful improvement for them would be to provide a controlled shear flexibility between the top of the piles by using vulcanized rubber cushions bonded to metal plates which are in turn attached to the tops of the timbers by screws or bolts.

The second improvement would be to provide protection from blows against individual piles by appropriate superstructures. This is particularly necessary when the inclination of the piles or the tidal range is large because both increase the probability of such a blow.

A final possibility is to drive timber piles all vertically skin to skin and wrap them tightly together at various heights. The result will be a cantilever type dolphin similar to the single tube steel dolphins discussed below with a bundle of vertical elements that would work mainly in bending. Because shear transfer between the individual piles all along their length would be difficult to achieve, the structural action of such a dolphin would be essentially like the action of a single cantilevered pile multiplied by n, the number of piles. All piles would essentially carry the same load and the likelihood of failure of a single pile would be extremely small.

(2) The Single Tube Steel Cantilever

Recognition of the fact that allowable load increases directly with f_{all} and energy capacity increases with f_{all}^2, leads naturally to the consideration of steels and particularly of high strength steels as dolphin materials. The simplest dolphin type in steel would be a cylindrical steel tube embedded in the soil deep enough to act like a cantilever.

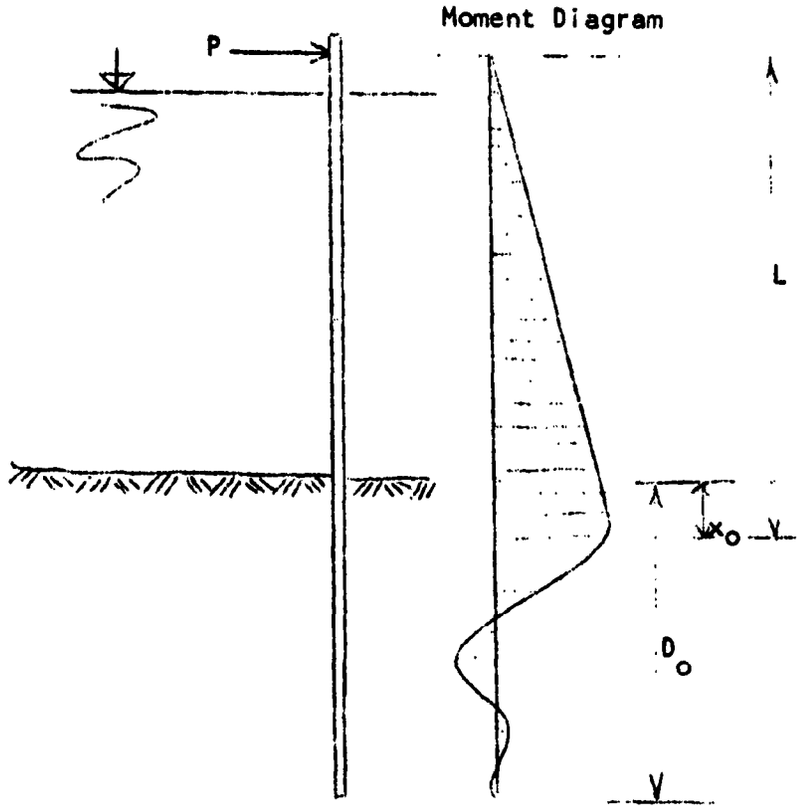

Fig. 3
Cantilever Pile Dolphin

The yield load for such a dolphin P_y, i.e. the load at which yielding would just begin in the extreme fibers, is given by:

$$P_y = f_y \cdot \frac{S}{L}$$

where f_y is the yield stress, S is the section modulus at the point of maximum moment, and L is the distance from the point of load application to the point of maximum moment. The deflection x at the yield load for such a dolphin will be:

$$x = f_y \cdot \frac{SL^2}{3EI}$$

and the energy stored will be:

$$W = \frac{1}{2} P_y \cdot x = f_y^{\,2} \frac{LS}{3Ed}$$

where E is Young's modulus, I is the moment of inertia, and d is twice the distance from the neutral axis to the extreme fiber. The resulting yield load and energy absorbing capacities for various possible dimensions of the steel pipe or tube cantilever are shown in Table I.

Table I
Yield Load and Energy Absorption Capacity of Single Tube Steel Dolphins

Dolphin Dimensions	f_y (ksi)	f_y/L	S (in^3)	P_y (tons)	$f_y^2 \times 10^{-6}$	$\frac{f_y^2 LS}{3E}$	Energy Absorption W in.tons
18"øx1/2" pipe	33	.0688	117	4.0	1080	674	18.7
24"øx5/8" pipe	33	.0688	295	10.2	1080	1700	35.4
36"øx1/2" pipe	33	.0688	463	16.0	1080	2670	37.1
18"øx1/2" high tens.st.	50	.1040	117	6.0	2500	1560	43.3
24"øx5/8" high tens.st.	47	.0980	295	14.4	2200	3460	72.2
36"øx1/2" high tens.st.	47	.0980	463	22.7	2200	5420	75.5
30"øx1" high tens.st.	47	.0980	638	31.3	2200	7500	125.0
36"øx1" high tens.st.	47	.0980	926	45.3	2200	10850	151.0
48"øx1 1/2" high tens.st.	43	.0895	2500	122.5	1850	24700	257.0

For the sake of simplicity, the table was computed for uniform sections and constant yield stress all along the length L which was assumed to be 40 feet. The influence of the variation of the length L is shown in Table II.

Table II
Influence of Length on Load and Energy Capacity of Steel Dolphins

Pile Dimensions	18"øx1/2"		36"øx1/2"		36"øx1/2"(HTSt)		36"øx1"	
	P_y (t)	W ("t)	P_y (t)	W ("t)	P_y (t)	W ("t)	P_y (t)	W ("t)
L = 30 ft.	5.3	14.0	21.3	27.8	30.3	56.5	60.3	113
40 ft.	4.0	18.7	16.0	37.1	22.7	75.5	45.3	151
50 ft.	3.2	23.4	12.8	46.5	18.2	94.5	36.2	189
70 ft.	2.3	32.6	9.1	65.0	13.0	131.5	25.9	264

It will be most interesting to compare these values with the corresponding values for the pile cluster dolphins. If we assume a pull-out load of 15 kips, we find from Figs. 11 and 12 of the Paper by Elms and Schmid the ultimate horizontal load and the energy absorbed in 40 ft. of water as:

$$P_{ult} = \frac{1}{2} \times 2.25 \times 15 = 16.7 \text{ tons}$$

$$W_{ult} = \frac{1}{4} \times 0.48 \times 15^2 = 27.0 \text{ t ft.} = 324.0 \text{ inch tons}$$

for the 19-pile dolphin and

$$P_{ult} = \frac{1}{2} \times 4.75 \times 15 = 35.6 \text{ tons}$$

$$W_{ult} = \frac{1}{4} \times 2.25 \times 15^2 = 126 \text{ t ft.} = 1520 \text{ inch tons}$$

The comparable steel dolphins for example would be the L = 50', 36" ø x 1/2" High Tension Steel dolphin with P_y = 18.2 tons and W_y = 94.5, and the 36" ø x 1" pile with P_y = 36.2 tons and W_y = 189 inch tons.

Even though the values for the timber dolphins were computed on the basis of complete failure whereas the values P_y and W_y refer only to the beginning of yielding and therefore are not strictly comparable, one nevertheless can see that for roughly equal static strength the timber cluster dolphins have a significantly higher energy absorption capacity. To have an energy absorption capacity equivalent to that of the timber pile cluster dolphins, the deflection x of the steel monotubes would have to be at least tripled. To achieve this two alternate designs are proposed: the Elbow Dolphin and the Cushion Dolphin.

(3) The Elbow Dolphin

The elbow dolphin is shown in Fig. 4. It is in principle a single tube cantilever dolphin except that the part embedded in the soil and the part projecting above water are offset by two elbows and a connecting link of length L_E. This has the effect of greatly increasing the deflections.

The member CD may or may not have the same section as that in AB or BC. The main feature required is that at C there must be a connection capable of carrying a moment as well as a torque of magnitude PL. The element CD could then also be formed by a group of pipe piles, H piles, or even timber piles as long as they can sustain the loads in bending and in torque.

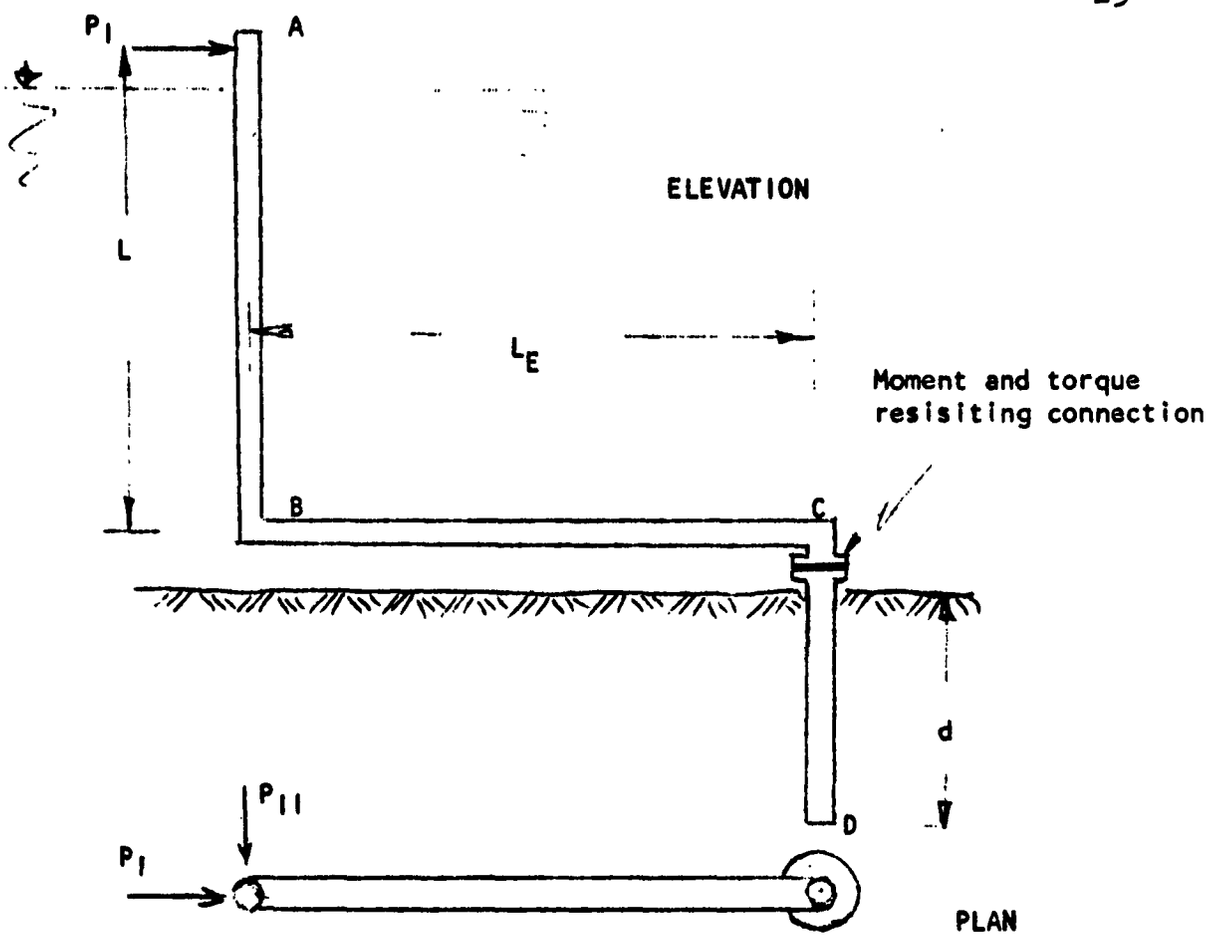

Fig. 4
Elbow Dolphin

A quick comparison of the deflections will show the considerable increase in deflections. Let us for the sake of simplicity assume the cross section to be constant in all three members AB, BC and CD and let $L_E = L$. The deflection of point A due to the load P_I then would be, using the principle of virtual work:

$$\Delta = \int \frac{M_P M_Q dx}{EI}$$

Evaluation of the integral for both members AB and BC yields:

$$\Delta = 4 \frac{PL^3}{3EI}$$

Since the deflection of the cantilever without elbow is $PL^3/3EI$, the deflection has been quadrupled.

Let us assume the load is applied in the direction of P_{II} (Fig. 4). In this case the member BC is not only subjected to bending but also to torque. In this case the deflection of point A is made up of several components:

bending of AB: $\Delta_1 = \frac{PL^3}{3EI}$

bending of BC: $\Delta_2 = \frac{PL^3}{3EI}$

twisting of BC: $\Delta_3 = L \times \theta$

Since $\theta = M_t L/GI_p$ and $M_t = PL$, $G = 0.4\ E$, $I_p = 2I$, we get

$$\Delta_3 = \frac{5\ PL^3}{4\ EI}$$

and the total deflection Δ becomes:

$$\Delta = \frac{23}{12}\frac{PL^3}{3EI}$$

an almost six-fold increase over the cantilever deflection.

Thus it can be seen that by adjusting the length of the elbow the deflection and hence the energy absorption capacity of the elbow dolphin can be chosen at will by the designer. In order to increase the torque resistance of the part embedded in the soil, two or four vanes may be welded to it as shown in Fig. 3.11, Section 13-13 of the Thesis (p. 110). The depth to maximum moment and the depth of embedment d may be calculated after Blum (pp. 53-59 of Thesis).

The erection of the dolphin may be accomplished by driving the section CD and attaching the elbow ABC by diver under water through a connection capable of sustaining moment and torque. If a tubular section is chosen for section CD, driving of such a large diameter pile may be somewhat of a problem, particularly since jetting is not advisable here because the pile has to get its support from the lateral soil reaction along its length and jetting would seriously decrease its effectiveness. However, with the development of modern hydraulic and vibratory pile drivers the driving should not be a major problem. There are, for example, now vibro-pile drivers in existence in the USSR which have driven tubular concrete piles up to 8-10 ft. diameters. Vibro-pile drivers are also now available in the United States and it is certain that the near future will bring bigger and more powerful vibrators. And, as mentioned earlier, section CD need not necessarily be of single tube construction.

(4) The Cushion Dolphin

The cushion dolphin (Fig. 5) is a single tube steel cantilever that has a vulcanized rubber cushion bonded to metal plates. This cushion is just above the mudline and provides the additional flexibility to give the extra energy absorption required. By a proper dimensioning of the rubber cushion, the energy absorption capacity of the dolphin can

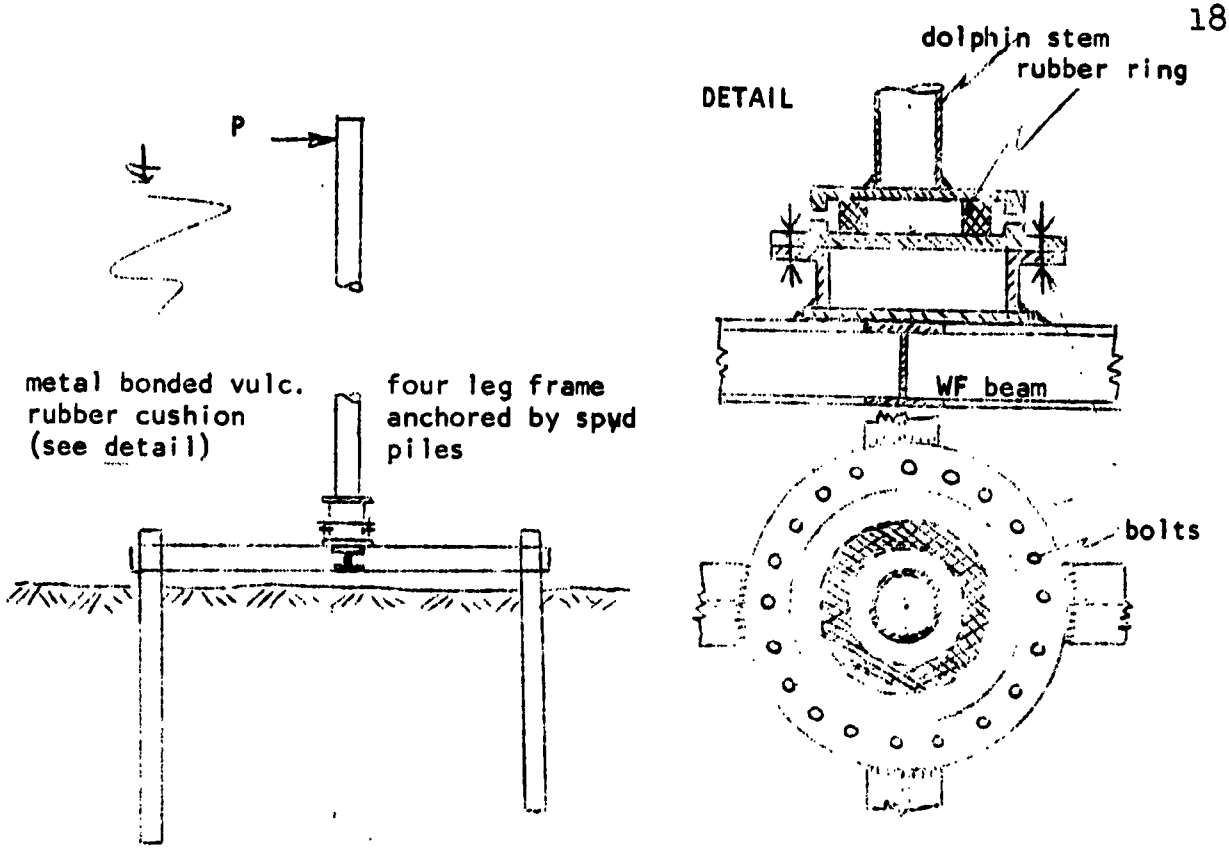

Fig. 5
Cushion Dolphin

be chosen at will. As in the case of the elbow dolphin, the part of the dolphin embedded in the soil can be driven first and need not necessarily be a steel tube. It could, as shown in Fig. 5, be a frame with a tubular stub to connect with the top part of the dolphin while the frame is anchored into the soil by spud piles.

(5) The Multiple Steel Tube Dolphin

While many designers recognized the simplicity and advantage of the single steel tube dolphin, its rigidity and the difficulty of driving them in the past led to the design of dolphins using several connected steel tubes. Several

examples are discussed in the Thesis. To assure integral action of the individual elements, some kind of framing or connection is necessary. This makes the dolphin more complicated and usually more expensive than a single tube structure. Also, it must be remembered that in driving piles from a barge more time is usually spent in setting the piles in the precise location called for by the design than in actually driving them to the required depth. Dolphins with connections which distribute the loads more or less evenly also under eccentric loads are called torsion resistant dolphins and were found to have a markedly higher energy absorption capacity. The problem with these dolphins is that, in order to make the framing or connection possible after driving, they have to be set very carefully in the right place, which is a difficult task. If, on the other hand, they are connected before they are driven, one of the main reasons for going to a multi-member dolphin is eliminated because driving such a group of steel piles simultaneously is at least as difficult as a large single tube. The developments in the future therefore clearly will favor the single tube steel dolphin.

(6) The Ring Pontoon Steel Dolphin

A unique and rather interesting variation of the single tube steel dolphin is the ring pontoon dolphin invented by

Pavry (p. 173). This dolphin would have an ideal load deflection curve starting very softly and becoming rather steep for large deflections. The dolphin, hence, would respond well to big as well as small vessels. It gets its reaction from the buoyancy of a floating pontoon ring that is increasingly immersed as the deflection increases. The big disadvantage appears to be the continuous wear and tear on the shaft and the bottom anchors that must come from the pontoon being tossed around by the waves of an ever restless sea. The experience with the floating fenders on the Texas towers shows that systems which permit such action are hazardous and wear out quickly. Also, the cost of such a relatively complicated system appears to put it at a disadvantage in competition with other types.

(7) The Steel H-Pile, Box or Wall Dolphin

A very useful and adaptable type of dolphin is the one made up of Peine H-pile sections driven side by side (with interlocks) to form a box or a wall (see p. 118, Fig. 3.13). While this type of dolphin most certainly requires more steel, the driving of the piles will be easier and possibly quicker. The wall type may present difficulties in the maintenance of corrosion protection since some exposed surfaces are not easily accessible. The dolphin also is rather stiff and inflexible and hence has a low energy absorption capacity.

A number of special types of dolphins have been proposed or used in particular locations, such as the Baker Bell, the screw pile dolphin, or the sheet pile cell. However, they always serve for quite specific conditions and purposes and under such conditions there is usually little choice for alternatives. Thus a comparative analysis for them makes little sense.

There are many factors that must be considered when a designer chooses a dolphin. Besides the basic criteria of strength and energy absorption capacity, such items as initial cost, expected service life, maintenance cost, soil conditions, exposure, reliability, performance experience, etc. require the attention of the designing engineer. It may be difficult to state with certainty that this or that type of dolphin is clearly superior to another one at any one particular location when an analysis of all the factors stated above shows that several types are in competition and probably would perform well. At the same time, in view of the large variety of locations, conditions and functions for which a dolphin may have to be designed, it would be quite unreasonable to expect that one type of dolphin (say the timber pile cluster dolphin) would best serve for all needs in every instance.

To explore all possible dolphin types, discuss their analysis and design, review their performance and suggest some modifications in their design and construction has been the purpose of this report.

It is hoped that with this comparative analysis we have pointed out the wide variety of choices that are available to the designer. If, on the basis of this extended range of possibilities, a wiser choice will be made in the selection and design of dolphins because alternatives were considered and carefully weighed against each other, this report will amply accomplish its purpose.

DOLPHIN DESIGN

by

Bruno M. Carioti
David G. Elms
Robert C. Peace

Submitted in Partial Fulfillment of
the Requirements for the
Degree of Master of Science in Engineering
from Princeton University, 1961

Authors' Signatures:

Bruno M. Carioti

David G. Elms

Robert C. Peace

Advisor's Signature:

Werner Schmidt

Submitted
20 May 1961

PREFACE

Dolphins are of vital importance to the maritime industry. Properly designed they assist the safe maneuvering, berthing, and mooring of ships on rivers and in harbors. Improperly designed they present a hazard to shipping and a source of continual problems to the port authority.

While dolphins are small and inconspicuous in comparison with other important waterfront structures, they present to the engineer a design problem of no less difficulty. Because of the formidable number of widely variable, often indefinite, parameters which affect dolphin design, the results of even the most rigorous analysis of a particular dolphin problem cannot approach the degree of accuracy attainable in the design of most civil engineering structures. In spite of the difficulty of the dolphin problem, experience has shown that satisfactory design can be achieved through the application of engineering principles coupled with sound judgment and the knowledge obtainable in recorded experience.

This thesis is the culmination of the efforts of the authors to analyze and solve in the light afforded by the available literature the several engineering problems encountered in dolphin design. The literature available in published form has been supplemented by correspondence of the authors with various port operators and design agencies.

The several uses of dolphins are discussed, followed by a general discussion of the problems which must be addressed by the designer. A discussion of the loads which must be considered in design and the means of evaluating them is succeeded by a comparison of the pertinent properties of various applicable construction materials. Analyses of several types of dolphins are presented to guide the engineer both in selecting a suitable dolphin for a particular application and in performing the actual design. Because of the important role of soil mechanics in every dolphin design, a special chapter is devoted to that subject. Since the difficulty of maintaining the integrity of a dolphin structure in a seawater environment can be simplified during the design phase, deterioration problems together with some solutions to them are presented. That chapter is not intended as a complete discussion of such an extensive subject, but as a reminder of the omnipresent forces of nature.

In Appendix A are included summaries of both full-scale and model tests on dolphins and piles subjected to lateral loading. The results of these tests have corroborated some of the engineering theory used in the design and analysis of dolphins. On the other hand, they have also indicated the need for additional experimental work to clarify the areas of doubt especially with regard to the resistance of soils under dynamic and repetitious loading.

ACKNOWLEDGMENTS

The authors wish to express their sincere appreciation to those who have kindly assisted in the preparation of this thesis. They are indebted to:

Professor W. E. Schmid, their advisor, for his continued interest and guidance and the contribution of many helpful suggestions.

Professors G. P. Tschebotarioff and D. P. Billington who offered helpful advice.

The several practicing engineers, various consultants of the U. S. Navy Bureau of Yards and Docks, and port management agencies who graciously contributed information and suggestions.

Mr. J. A. T. Aspden, Mrs. M. F. Wightman, and Mrs. A. J. Faller for their assistance in the literature search and their patience in maintaining a separate "dolphin shelf" in the River and Harbor Library.

Mrs. T. M. McQuade who typed both the draft and stencils for the thesis.

Mr. R. Stevenson who assisted in the reproduction of the many figures and stencils.

In addition, Lt. Carioti and Lt. Peace wish to express their sincere gratitude to the U. S. Navy Bureau of Yards and Docks for the opportunity of this year of graduate study of waterfront facilities.

TABLE OF CONTENTS

TABLE OF CONTENTS (continued)

CHAPTER I

DOLPHINS IN GENERAL

A. Applications of Dolphins

The structure usually visualized when the word "dolphin" is mentioned is one consisting of a group of piles driven into the sea bed with their heads connected together in some manner above water level. Although, as will be seen later, there are exceptions to this concept, visualization of such a structure by the reader will be sufficient for the purpose of discussing dolphin applications. The use of dolphins can be, in general, divided into the following five categories:

(1) Berthing -- Dolphins for this purpose are located alongside or at the ends of piers or quays. Their function is to absorb the kinetic energy of berthing ships and the direct contact forces of berthed vessels under the effect of wind, waves, and currents. Berthing dolphins may independently satisfy this function or they may act in conjunction with fender systems attached to the pier.

(2) Mooring -- Mooring dolphins serve as a place of attachment for a ship's lines, and must resist lateral forces imposed by the lines of a moored ship under the influence of wind, waves, and currents. In some instances mooring dolphins are used as a means of anchoring one end

of a vessel while the other end is swung into final berthing position.

(3) Protection -- Protection dolphins provide protection to both ships and marine structures against the eventualities of collision. They may perform this function located at the exposed corners of piers, wharves, and other structures, or they may be located strategically along the sides of dangerous channels solely as protection for shipping.

(4) Guiding -- Guiding dolphins serve to guide approaching vessels into a narrow slip. Examples of their use are at ferry slips and drydock entrances.

(5) Beacon -- Beacon dolphins have the sole purpose of supporting navigation aids. In some locations beacon dolphins are designed with a high kinetic energy absorption capacity to insure permanence of the navigation aid in the event of collisions.

As can be seen from the above discussion, many dolphins will serve two or more of the functions listed. Further, it will be observed that in spite of their several purposes most dolphins must be designed and constructed to resist mooring forces and/or to absorb kinetic energy.

B. Problems

The ideal dolphin would permanently provide complete protection to shipping and to waterfront structures without

requiring repairs. Unfortunately, as is the case with most marine structures, it is impossible to construct such a dolphin within economic reason, if at all. Even when all structural needs of a dolphin can be satisfied, the deterioration of materials in a marine environment provides the designer with an interesting challenge. The structural problem of a dolphin which must absorb kinetic energy is unlike that encountered in most civil engineering structures. In order to provide complete protection to shipping and to marine structures, a dolphin must be:

(1) sufficiently flexible to absorb the kinetic energy of a moving ship without developing lateral pressures large enough to overstress the hull plates of the ship; and

(2) sufficiently strong to resist the lateral thrusts developed by repetitive ship-dolphin collisions without danger of structural failure.

This flexibility vs. strength paradox is, then, of primary importance in the design of all energy-absorbing dolphins. Since the lateral thrust developed in a dolphin must be absorbed by its foundation, the correct evaluation of soil resistance is of major importance to the success of a dolphin designed within economic reason. Quantitatively, there exists no precise knowledge on soil reaction to laterally loaded piles. Design methods which have empirically been proven effective are presented in Chapter II of

this thesis. Because the design of a dolphin is based upon lateral loads and energy absorption requirements, their realistic evaluation prior to the initiation of the structural design phase is the most important step in dolphin design.

C. Evaluation of Energy Absorption Requirement

The kinetic energy which must be dissipated in a ship-dolphin collision is usually computed by the formula

$$E_o = \frac{W\ V_n^2}{2g} \quad \text{ft. tons}$$

in which E_o = kinetic energy in a direction normal to the dolphin

W = displacement of vessel in tons

V_n = velocity of approach normal to dolphin in feet per second

g = acceleration due to gravity (32.2 fps^2).

Callet (Ref. 10) has suggested that W be increased to include the weight of water which must be decelerated as a part of the collision. He computes the weight as that of a volume of water having an area equal to the submerged area in a vertical plane through the longitudinal axis of the ship and a thickness equal to the deflection of the dolphin. The total kinetic energy is usually considered to be absorbed through:

(1) elastic and plastic deformation of the ship,

(2) deflection of the shock absorbing structure,

(3) displacement of water,

(4) swinging in a horizontal plane of the ship's mass about the contact point,

(5) rotation in a vertical plane of the mass of the ship about the contact point.

For various conditions of ship approach, it has been estimated that the shock absorbing structure, a dolphin in this case, must absorb from 0.20 to 1.00 of the total kinetic energy. Figures of 0.40 and 0.50 are commonly used in the design of fender systems. In the case of flexible dolphins, Eggink (Ref. 17) has shown that the elasticity of the ship has little effect in decreasing the total lateral force ultimately transferred to a flexible dolphin. It follows that item (1), above, has little effect in reducing the energy which must be absorbed by a flexible dolphin. It seems logical that little energy would be absorbed by the displacement of water if the dolphin were relatively isolated, and no water was trapped between the berthing ship and a solid structure such as a quay wall. If the point of contact between dolphin and ship happened to be in the same horizontal plane as the center of mass of the ship, as is very likely, no energy would be absorbed by rotation of the ship in a vertical plane. It is, then, apparent that in

the case of a dolphin nearly all of the kinetic energy of the approaching mass must be dissipated through swinging of the ship and deflection of the dolphin. Pages (Ref. 53) suggests that the energy absorption requirement of a structure be computed by the formula

$$E = \varphi \frac{W\ V^2}{2g} \quad \text{where} \quad \varphi = \frac{1}{1 + \frac{d^2}{r^2}}$$

is a reduction factor which accounts for energy absorbed in swinging the ship, and in which

d = distance between the center of gravity of the ship and the point of contact measured tangent to the point of contact (see Fig. 1.1)

r = radius of gyration of the ship's mass about its longitudinal axis.

Assuming that the mass of the ship is distributed evenly over its horizontal area, the radius of gyration of that area about the fore and aft central axis of a typical ship of length L is approximately $L^2/16$. The formula for φ then becomes

$$\varphi = \frac{1}{1 + 16\frac{d^2}{L^2}}$$

If the ship approach is such as to strike the dolphin at the bow or stern, distance d is approximately equal to L/2 and about 0.20 of the total kinetic energy must be absorbed

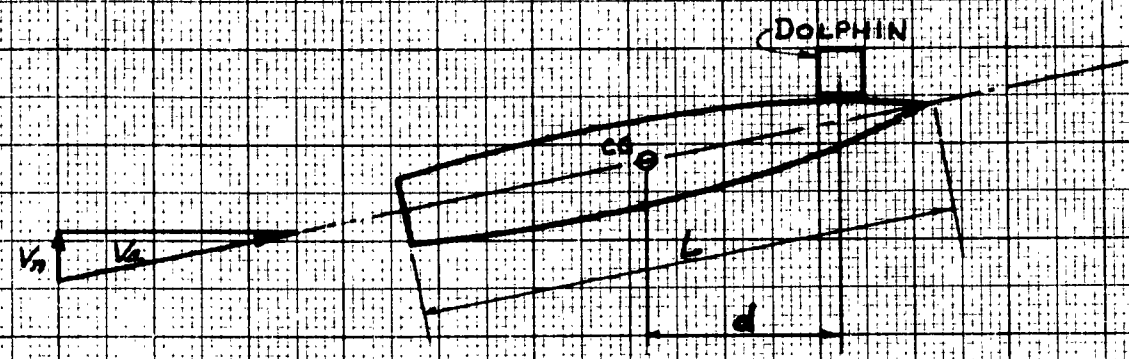

$$E = \frac{W V_n^2}{2g}\left(\frac{1}{1+16\frac{d^2}{L^2}}\right)$$

Figure 1.1 - Reduction of Kinetic Energy Due to Swing of Ship

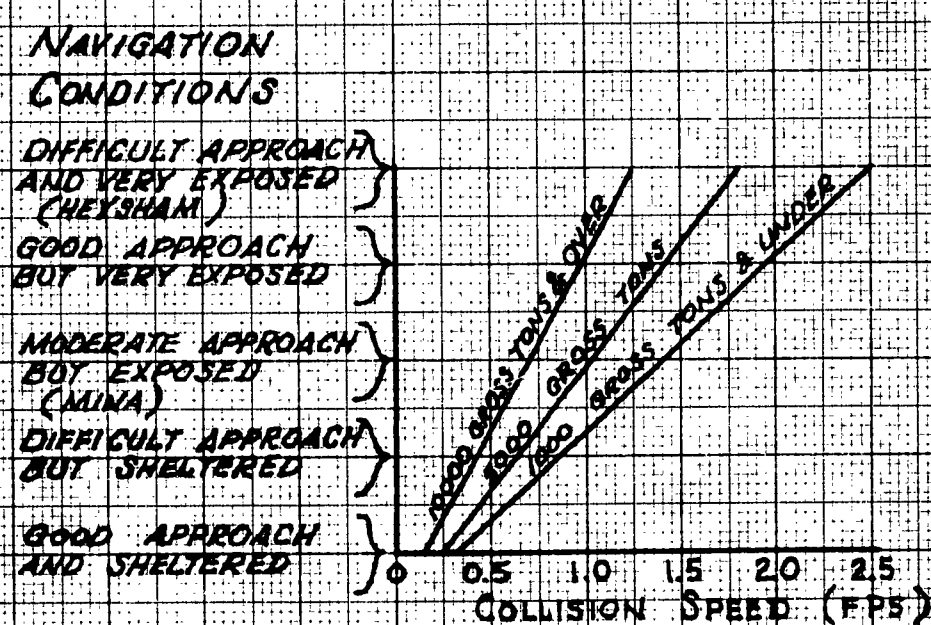

Figure 1.2 - Collision Speeds of Ships For Fender Design

After A.L.L. Baker (Ref.)

by the dolphin. For a value of $d = L/4$, about 0.50 of the total kinetic energy must be absorbed by the dolphin. In the extreme case when $d = 0$, the dolphin would be subjected to 1.0 of the total kinetic energy. By this method the designer can, with knowledge of the geometry of probable approach situations, approximate the portion of total kinetic energy which must be absorbed by direct deflection of the dolphin structure. It is to be noted that the preceding discussion has been limited to the evaluation of kinetic energy absorption requirements in a direction normal to a dolphin through its central axis. As will be seen under the discussions of dolphin types and characteristics, Chapter II, some dolphins are designed to absorb energy in torsion when subjected to eccentric impacts.

Because E varies directly as V^2, the proper evaluation of design approach velocities is the most important single step in estimating energy absorption requirements. Unfortunately, the approach velocity is dependent upon a formidable list of parameters. Some of them are:

(1) Size of ship

(2) Ship's steering gear and power

(3) Wind

(4) Current

(5) Waves

(6) Skill of pilot

(7) Tug operation

(8) Geometry of approach situation

(9) Appearance of dolphin

Obviously, the determination of approach velocity does not lend itself to theoretical analysis. A limited number of observations of berthing speeds at various locations under various conditions has revealed velocities of from almost zero to about 4 feet per second. Since most berthing is accomplished by essentially lateral movement of the ship, recorded velocities are generally indicative of the approach speed normal to a berth. A distinct trend toward a decrease in berthing speed with increase in ship displacement is evident in most observations, and in spite of the wide range of velocities observed, there is fairly general agreement with the curves shown in Figure 1.2 which were published by Professor A. L. L. Baker (Ref. 5). Visioli, in the general report which summarized several important papers presented at the 18th International Congress of Navigation (Ref. 82), observes that based upon experience the assumption of an impact speed of 1.0 fps seems to provide reasonable safety. From the foregoing it can be seen that the selection of a realistic value for berthing speed is dependent upon the judgment of the designer with due regard to recorded experience. For the design of energy absorbing dolphins not specifically intended for berthing, the selection of design approach velocities must be based entirely upon the judgment

of the designer. In such instances consultation with local navigational interests and actual field measurements will be of great assistance.

D. Evaluation of Lateral Loads

The maximum lateral load that must be resisted by a dolphin during a collision is a function of the kinetic energy absorption requirement and the load/deflection characteristics of the dolphin. For example, for a flexible dolphin having a linear relationship between load and deflection, the maximum lateral load is determined

$$P_{n(max)} = \frac{2E}{\Delta}$$

for the given energy absorption requirement, E. It is observed that this lateral load is inversely proportional to the deflection, thus emphasizing the desirability of structural flexibility of the dolphin. The preceding discussion has been limited to the evaluation of lateral loads normal to a dolphin structure. It is also necessary to evaluate and determine the capability of dolphin structures to resist eccentric loads. In nearly all collision situations the ship will have a component of velocity tangent to the dolphin, and an eccentric lateral load, P_t, will be applied to the dolphin at the point of ship contact. The magnitude of P_t at any stage of deflection normal to the dolphin can

be determined by

$$P_t = \mu P_n$$

in which μ = coefficient of kinetic friction between ship and dolphin

P_n = normal force between ship and dolphin at any stage of deflection normal to the dolphin.

If the tangential motion of the vessel has not been stopped before the dolphin has developed $P_{n(max)}$, the maximum normal force, a not unlikely situation, then

$$P_t = \mu P_{n(max)}.$$

The effect of P_t depends upon the type of dolphin and its structural details. In a flexible dolphin constructed of a single large diameter caisson, a significant torsional moment, $P_t r$, may be created, in which r is the radius of the caisson. In dolphins consisting of a group of piles, the effect of P_t depends on the fixity of the piles at the dolphin top. If the piles are hinged at the dolphin top, P_t must be absorbed primarily in bending of the individual piles, and if the piles are fixed at the top, P_t will be absorbed in bending and torsion of the piles. Further discussion of the reaction of dolphins to eccentric loads is included in Chapter III under "Torsion Resisting Dolphin." Because the energy absorption characteristics of dolphins vary with the state of the tide, and therefore the point of

load application, the tidal range must be taken into consideration when determining maximum lateral loads due to collisions.

Berthing and mooring dolphins must resist lateral loads imposed by moored ships under the influence of wind, current, and wave action. The effect of wind and current on moored ships was the subject of model tests conducted by the U. S. Navy and reported by Ayers and Stokes (Ref. 4). Figure 1.3 indicates prototype wind and current forces and yawing moments for a destroyer as obtained from the model tests. Yawing moments are defined as moments which tend to cause a ship to rotate in the horizontal about a point located approximately at its center of gravity. Table 1.1 summarizes the test results for prototype wind and current forces and moments for three classes of naval vessels. In general it was noted during the tests that forces due to wind varied uniformly with the square of the wind velocity over the range of test velocities, 75, 100, and 125 knots. Measurements indicated conclusively that the resultant wind force was not a single force but a force and a couple. Similar results were obtained in current tests. In the current tests it was further observed that maximum forces and yawing moments were roughly proportional to the square of current velocity. Significant variations occurred in lateral forces due to current with changes in water depth,

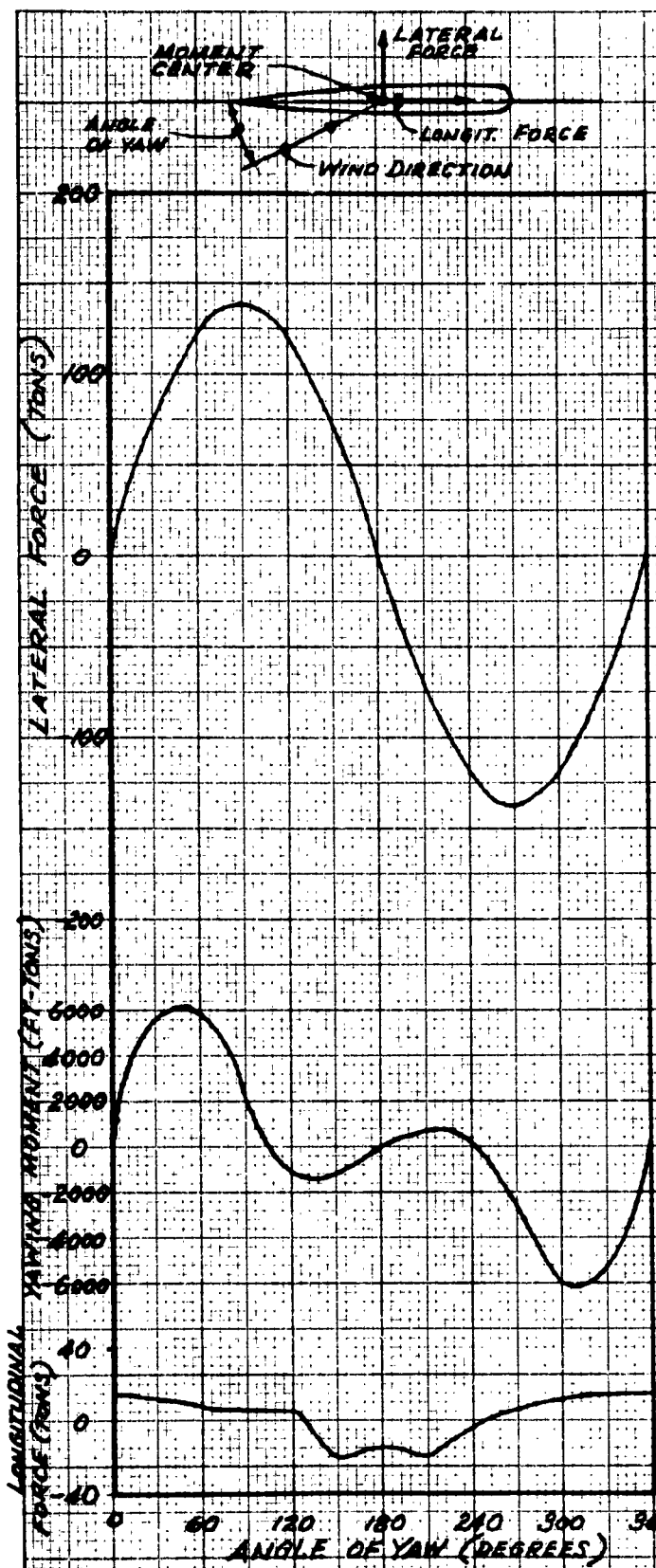

Forces and Moments on One Destroyer Airspeed = 100 Knots

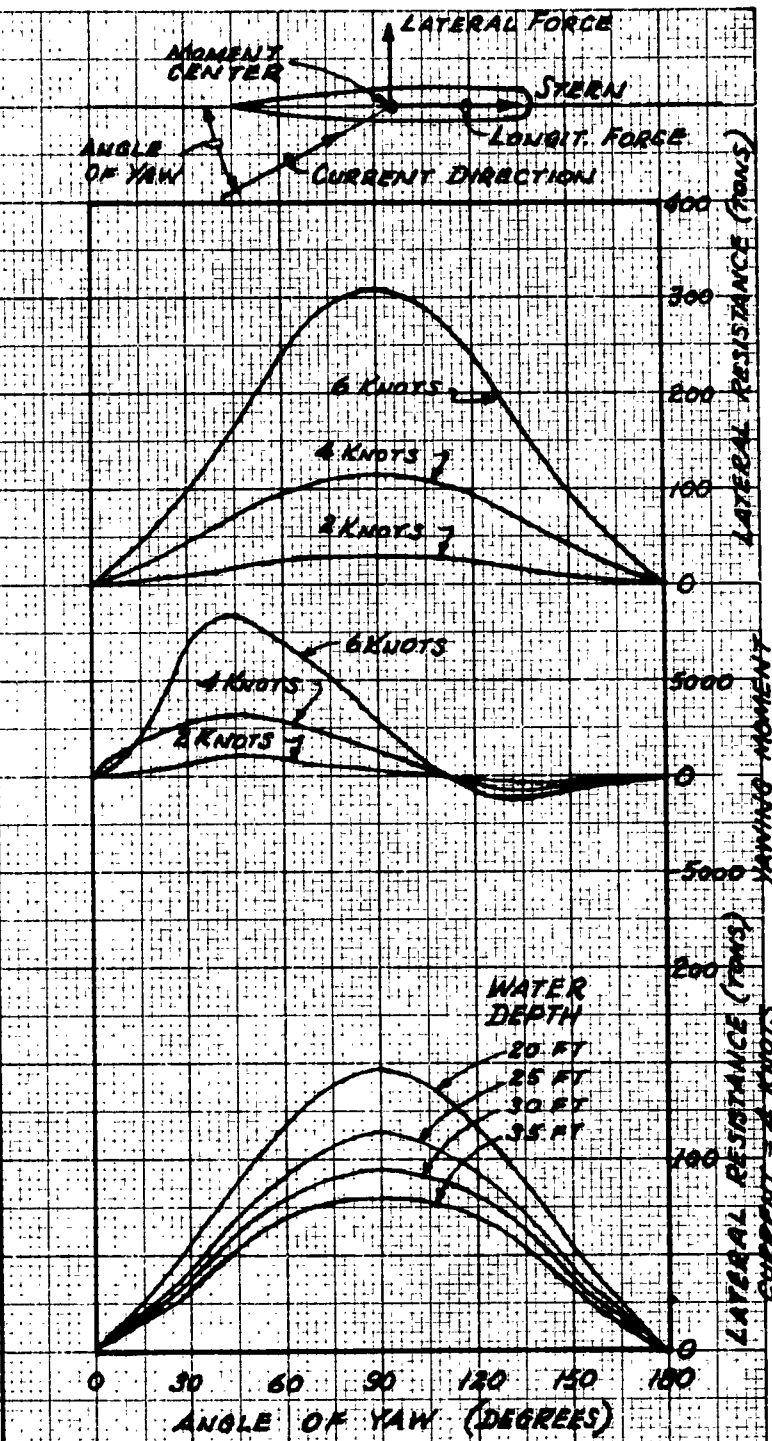

LONGITUDINAL RESISTANCE		
CURRENT	MAX. AHEAD TONS	MAX. ASTERN TONS
2 KNOTS	1.7	2.5
4 KNOTS	5.5	7.0
6 KNOTS	12.6	13.4

Forces and Moments on One Destroyer - Currents of 2, 4, and 6 Knots

Figure 1.3

After Ayers & Stokes (4)

	Vessel Type	Type of Mooring	No. of Ships in Mooring Group	Air Speed (knots)	Lateral Force (Tons)	Angle of Yaw (Degrees)	Yawing Moment (Ft.Tons)	Angle of Yaw (Degrees)	Longi-tudinal Force (Tons)	Angle of Yaw (Degrees)
WIND	Destroyer Length 376' Beam 41'	Pier Mooring	1	100	138	90	6152	50	20	150
	Cargo Ship Length 441' Beam 57'	Pier Mooring	1	100	244	90	5340	50	23	180
	Escort Carrier Length 499' Beam 65'	Pier Mooring	1	100	250	100	20000	40	31	160

	Vessel Type	No.of Ships	2 Knots			4 Knots			6 Knots			Water Depth
			Lat.	Longit.	Yawing	Lat.	Longit.	Yawing	Lat.	Longit.	Yawing	
CURRENT	Destroyer Draft 10.6'	1	30	2.1	1050	116	6.2	3500	310	13.0	8200	25'
	Cargo Ship Avg. Draft 7.5'	1	46	2.0	3200	120	5.0	7500	470	9.7	20000	25'
	Escort Carrier Avg.Draft 16.7'	1	65	2.6	1750	310	6.8	8200	1100	15.3	31500	30'

Summary Table of Maximum Total Wind and Current Forces and Moments for Three Classes of Ships

Table 1.1

After Ayers & Stokes (Ref. 4)

the lateral force varying approximately in inverse ratio to water depth. A complete summary of the model test results together with examples of their application is presented in Reference (77). Even though these data do not furnish exact information for other classes of vessels, they are probably the best available guide for estimating the value of wind and current mooring forces. Mooring forces due to waves in sheltered harbors are probably small in comparison to those imposed by wind and current forces, however in exposed locations and in harbors subject to long period standing waves, the forces induced by surge and sway of moored ships can be of significant magnitude. If a dolphin is to be subjected to forces under the latter conditions, the designer is advised to examine References (7), (26), (27), (49), (50), (51), (52), (87) and (89). A review and analysis of the theory and tests presented in those references is beyond the scope of this thesis.

Lateral forces due to the direct action of waves, wind, and current on a dolphin are insignificant when compared to those imposed by a collision or by a moored ship. Floating ice may be prevalent in some locations. While ice loads could conceivably be of structural significance under certain conditions, the greatest possibility of harmful effect due to floating ice is of local damage to piling and fenders.

E. Summary of Design Parameters

Based on the foregoing discussion of problems, energy absorption requirements, and lateral loads, Figure 1.4 has been prepared to demonstrate schematically the many dolphin design parameters.

F. Design Aids

Figures 1.5, 1.6, 1.7a, and 1.7b have been prepared to aid in making kinetic energy calculations.

G. Energy and Static Load Resistance of Materials in Dolphin Structures

Finding the best answer to the problem of determining the most suitable material for a structure is by no means a simple matter, for there are many factors to be considered in its selection. Frequently, there is no single answer, for several materials, each with its particular advantages and disadvantages, may be almost equally suitable. The engineer must then use his best judgment based on his experience and study, as well as on that of other engineers, in making the final selection of the material to be used.

In general the material which is best adapted for use in a dolphin structure, or in any other structure for that matter, will be the one which most nearly supplies the necessary functional characteristics at the lowest possible

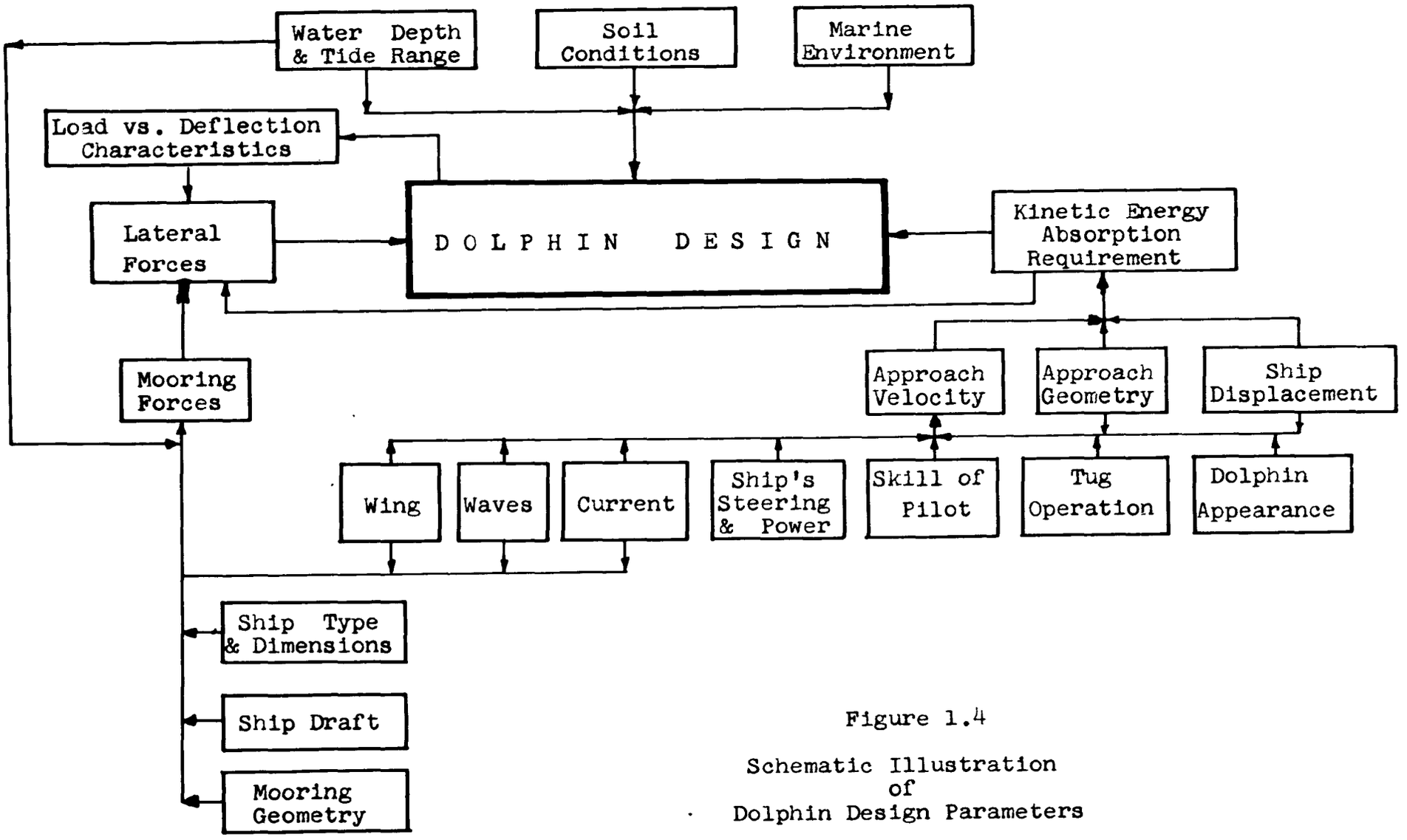

Figure 1.4

Schematic Illustration of Dolphin Design Parameters

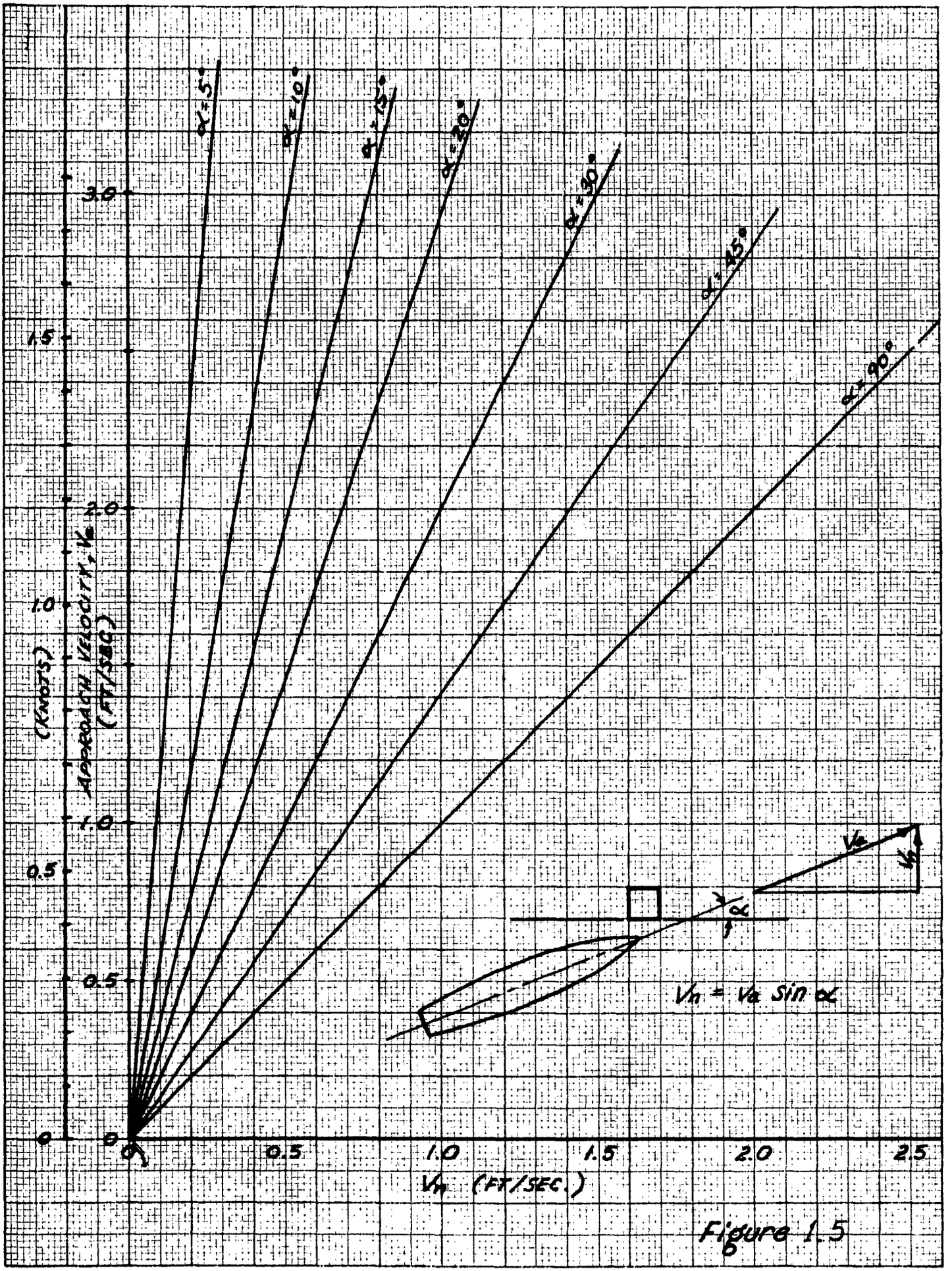

Figure 1.5

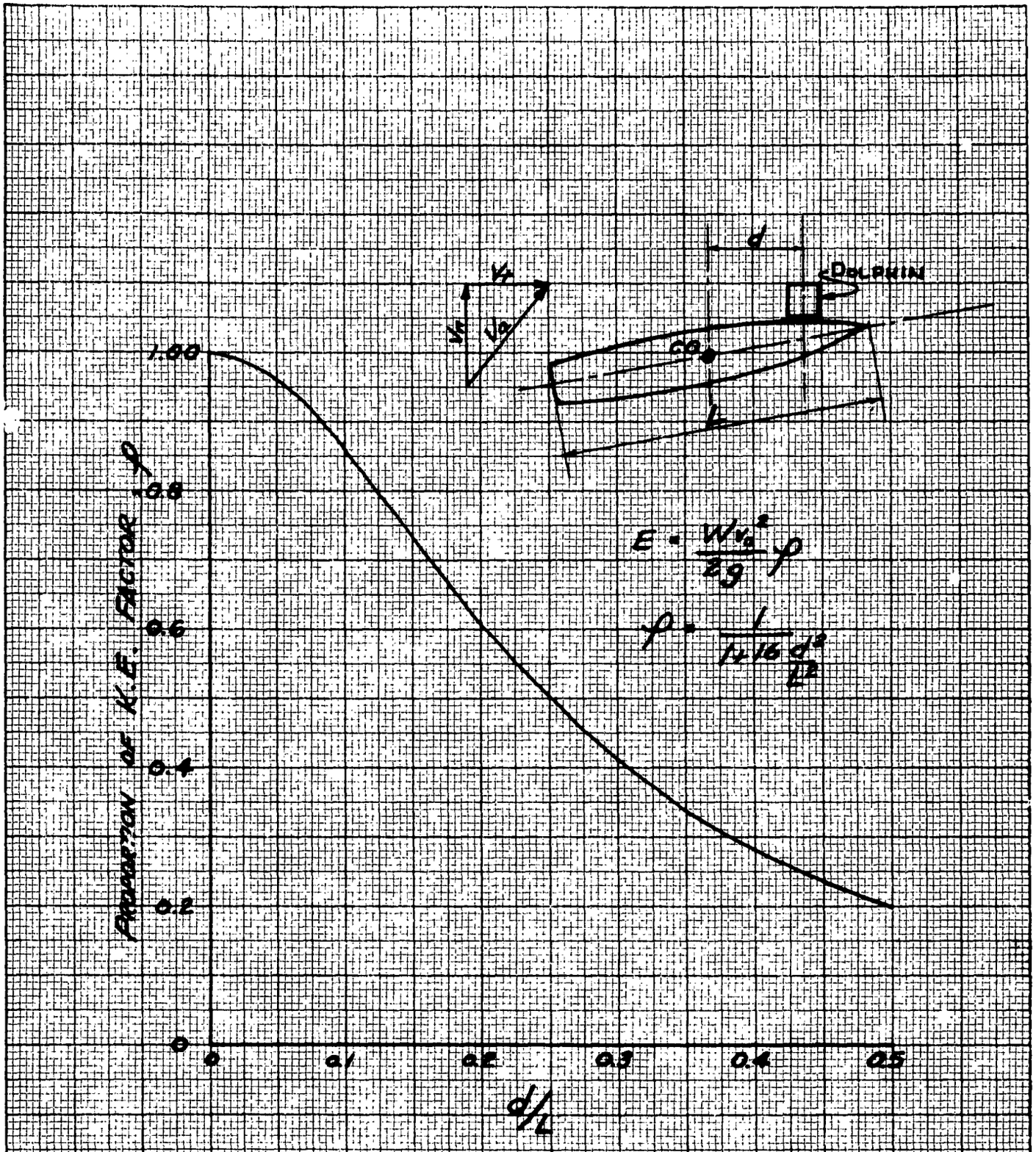

Figure 1.6 – Determination of Proportion of Kinetic Energy to be Absorbed by Dolphin for Various Approach Situations

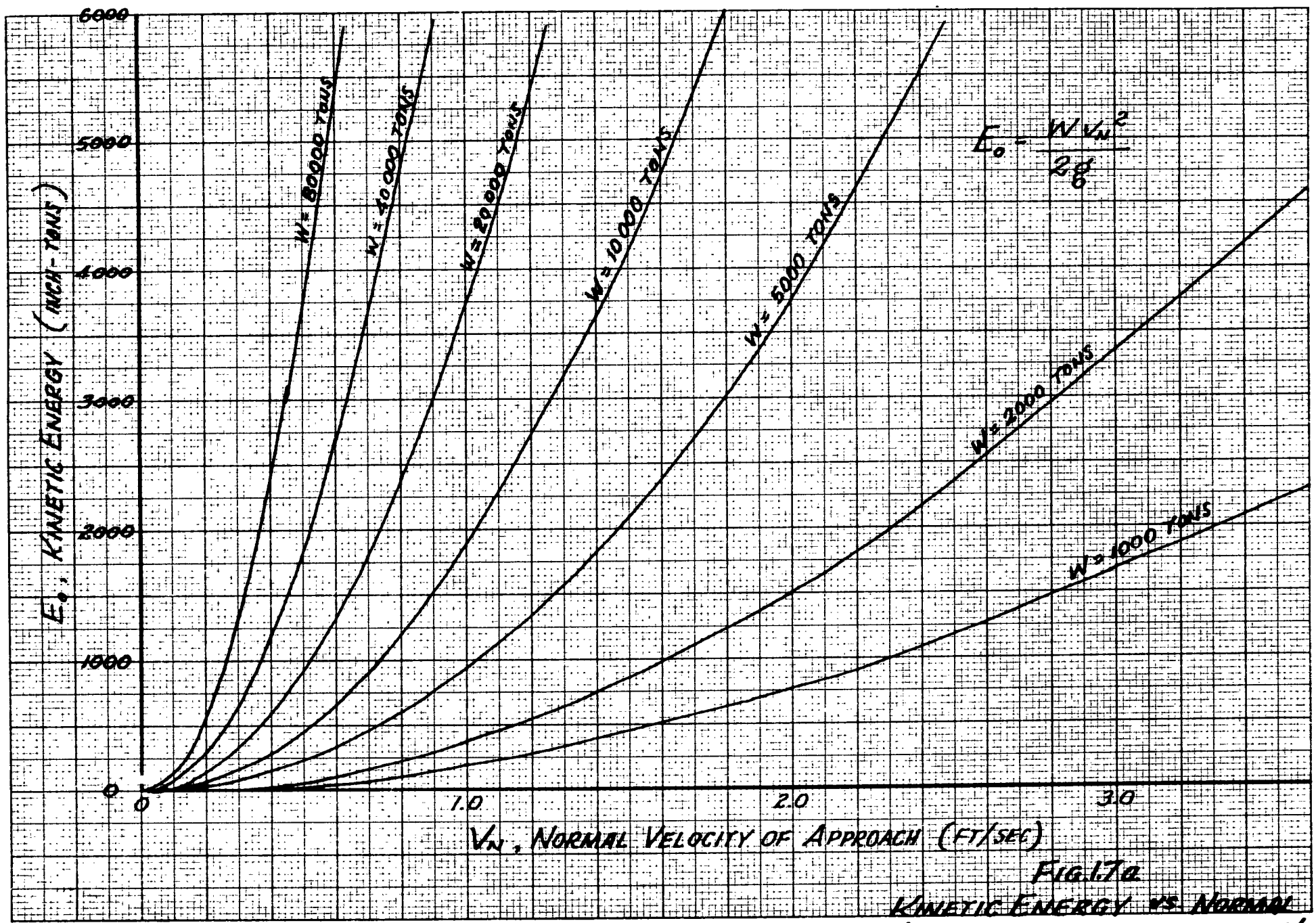

FIG. 17a

KINETIC ENERGY VS. NORMAL VELOCITY OF APPROACH FOR VARIOUS VESSEL DISPLACEMENTS

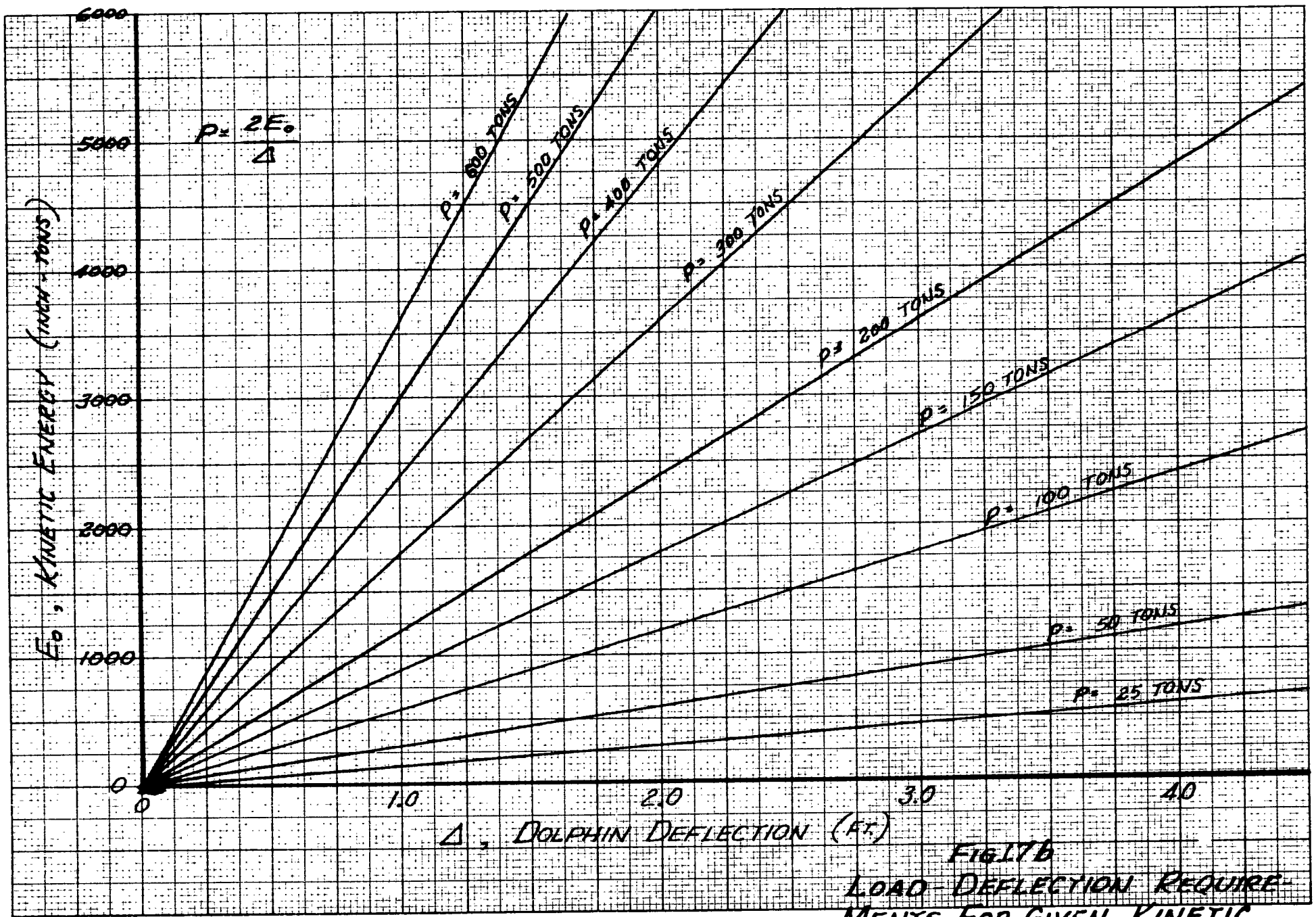

FIG. 17b
LOAD-DEFLECTION REQUIREMENTS FOR GIVEN KINETIC ENERGY

cost. In the evaluation of cost should be included the cost of material, installation, maintenance and repair, interest on investment, and in the event that the required life of the dolphin structure exceeds the anticipated life of the material, replacement cost. Thus a material with a low initial cost may ultimately prove to be very uneconomical as compared with a more durable material of higher initial cost. However, it is not intended at this point to go into the economics of the problem of material selection for a dolphin structure (except insofar as the efficient use of material in the structure is concerned). Instead, this chapter will discuss -- first, the basic principles of mechanics upon which depends the design of effective and efficient dolphin structures; and second, how certain commonly used materials compare in satisfying the structural requirements of dolphins.

1. Basic Principles of Mechanics Relating to Design of Dolphins

The structural members of a flexible dolphin must be able to resist impact loads that are applied by moving vessels. A part of the kinetic energy of a moving vessel must be absorbed by the resisting members, and consequently stresses and deformations are developed in the dolphin.

In determining the maximum intensity of stress in a member subjected to an impact or energy load U, the

assumption is made that the material of the member acts in the same way as it does when resisting a gradually applied (static) load; namely, that stress is proportional to strain until the proportional limit is reached. Hence, the energy U absorbed in straining the member may be expressed as the average force times the total deformation, i.e.

$$U = \frac{1}{2} P \cdot \Delta$$

in which P is the final value of the gradually applied load, and Δ is the total deformation of the member.

(a) Energy Absorption of Member Subjected to Direct Stress

If the load is axial and the member has a constant cross-section, the stress is considered to be uniformly distributed on each cross-section according to $S = P/A$, where A is the cross-sectional area. Also, the strain e is $\Delta/L = S/E$ with L being the length of the member and E being the elastic modulus of the material. Therefore, the maximum strain energy that can be absorbed by this axially loaded member without causing permanent deformation in the material is

$$U = \frac{1}{2} \frac{S_e^2}{E} \cdot AL$$

in which S_e is the stress at the proportional limit of the material.

(b) Energy Absorption of Members Subjected to Bending

In a member which must resist an energy load by bending, a linear distribution of stress exists which greatly influences the amount of energy that the member can absorb. In addition, the amount of energy that the member will absorb depends on the conditions of support (cantilevered, simply supported, fixed-end, etc.) and on the type of load (concentrated, distributed, etc.) as well as on the form and dimensions of the member.

For a cantilevered beam with a concentrated load at the free end (a common condition of a dolphin pile), the maximum moment M that can be resisted by the beam without permanent deformation is

$$M = PL = \frac{S_e I}{c} .$$

The corresponding deflection at the free end is

$$\Delta = \frac{P\ L^3}{3\ EI} .$$

Therefore the elastic strain energy is

$$U = \frac{1}{6} \frac{r^2 S_e{}^2}{c^2 E} \cdot AL$$

where I is the moment of inertia with respect to the axis of bending, r is the radius of gyration about the same axis, c is the distance from the neutral axis to the extreme fiber, and the other symbols are as previously defined.

If the cross-section of the cantilever beam or pile is rectangular, the maximum strain energy absorbed in bending is

$$U = \frac{1}{9}\left[\frac{1}{2}\,\frac{S_e^2}{E}\right] AL \ .$$

If the cross-section is circular, the maximum strain energy is

$$U = \frac{1}{12}\left[\frac{1}{2}\,\frac{S_e^2}{E}\right] AL \ .$$

A pile of circular or annular cross-section has the same amount of energy capacity about all horizontal axes through the center. This is advantageous when the loads may be applied from all directions, although it is less economical in material distribution than, say, a wide flange pile when the direction of load application is more specific.

It is interesting to note that the energy load which a member can resist in direct stress is nine times that of the same member in bending if the cross-section is rectangular, and twelve times if the cross-section is circular. Unfortunately, however, a dolphin has not yet been devised to take full advantage of this fact and the absorption of work by bending is still a far more economical solution than the absorption of energy by direct stress.

(c) Advantages of Uniform Strength

Since the bending moment along the length of a beam varies, being small in certain portions and large in others, a beam of constant cross-section is not efficient in absorbing energy. Considerable savings can usually be made in any kind of beam by adjusting the cross-section to the bending moment. In cantilevered pile dolphins, for instance, if the cross-section decreases towards the top, the piles will not only weigh less but will absorb a greater amount of energy for a given strength (due to increased deflection) than piles with a cross-section which remains constant from bottom to top. Cantilevered pile dolphins of uniform strength also offer an additional advantage that for a given amount of impact energy, the reaction they exert upon both the ship and the soil is smaller than if the dolphin piles were of constant cross-section.

The kinetic energy of a ship striking a flexible dolphin is absorbed in bending or deflecting the dolphin. This transfer of energy is represented as

$$\rho \frac{m V^2}{2} = \frac{P \Delta}{2}$$

where ρ is a coefficient which accounts for energy losses, m is the mass of the vessel, V is the velocity of the ship normal to the dolphin before impact, P is the maximum reaction occurring at the end of impact, and Δ is the corresponding deflection.

Referring to the case of a cantilevered beam illustrated in Figure 1.8, the total strain energy in bending the pile is

$$U = \int_0^L \frac{M_x^2}{2EI}\,dx$$

If the beam has a constant cross-section, the moment of inertia is constant and

$$U = \int_0^L \frac{P^2x^2dx}{2\ EI} = \frac{P^2L^3}{6\ EI}$$

If the moment of inertia varies in the same way that the bending moment does,

$$U = \int_0^L \frac{M_xPxdx}{2\ EI} = \frac{P^2L^3}{4\ EI}$$

where I is the moment of inertia of the beam at the built-in section.

Thus it is readily seen that the beam of uniform strength not only absorbs 50% more energy but also requires much less material.

To illustrate this advantage of varying the cross-section in more practical fashion, reference is made to Figures 1.8(a), (b) and (c). In Figure 1.8(a), two wooden piles of equal dimensions are shown. The pile on the left has been driven with its smaller dimension down, as is customary, and the second one has been driven with the larger dimension down. By simply inverting the pile so

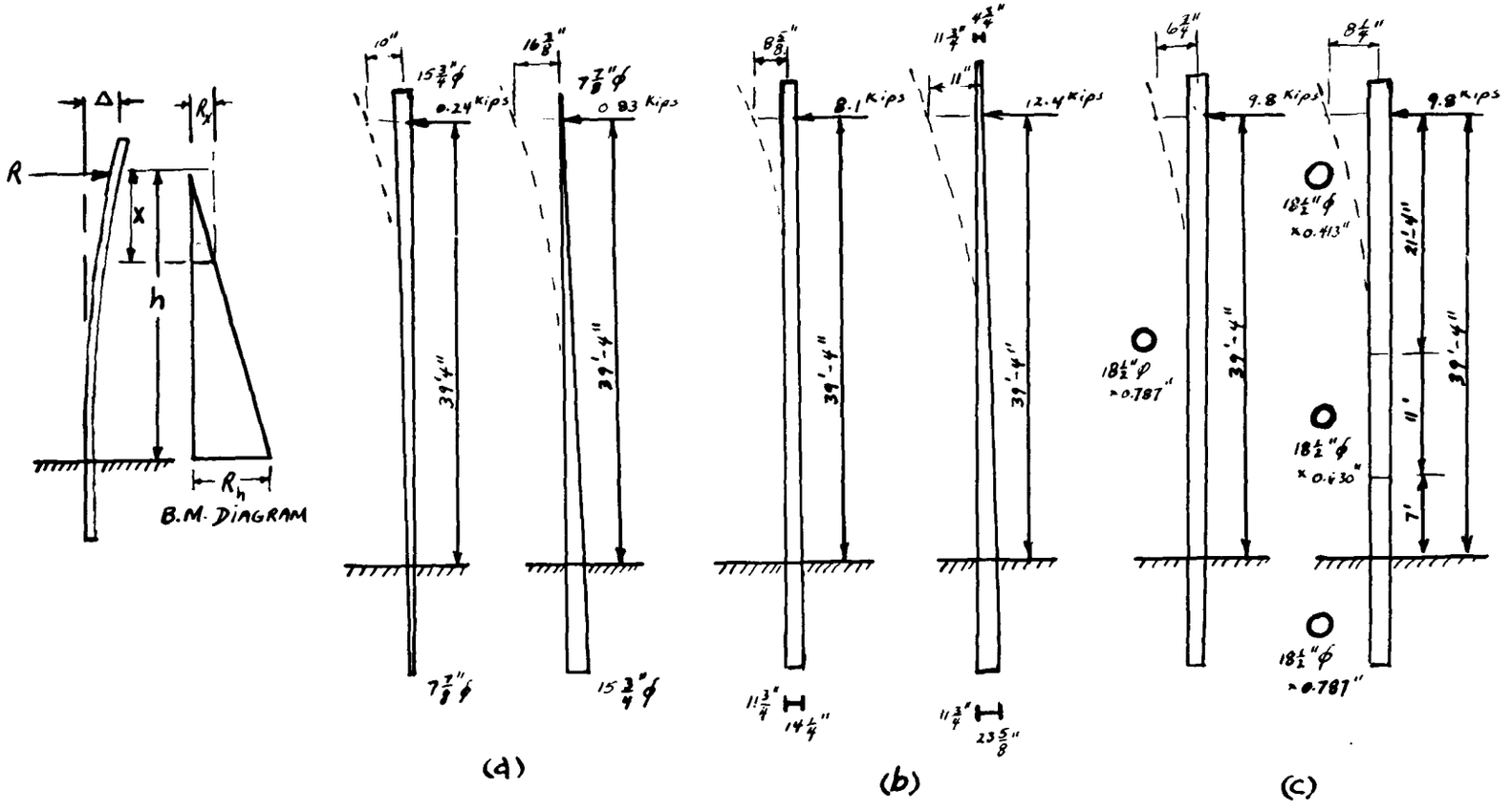

FLEXIBLE DOLPHINS
(After F. Vasco Costa ; Ref. 80)

Figure 1.8

that its cross-section increases from bottom to top, the energy absorption capacity is increased by 6 times.

Figure 1.8(b) shows two steel piles. The tapered pile on the right has been made by cutting a wide flange pile (like the one shown on the left) diagonally along its web, and then welding the sections to form a tapered pile with its smaller end at the top. By this simple operation, the energy absorption capacity of the pile is nearly doubled using the same amount of material and without increasing the working stress.

Finally Figure 1.8(c) illustrates a simple method of increasing the energy absorption capacity of a tubular steel pile by maintaining the same outside diameter throughout the length of the pile and decreasing the thickness of wall from bottom towards the top. A considerable saving in material and increase in energy capacity are thus obtained at a very small additional fabrication expense.

Whenever practicable, therefore, the idea of uniform strength which is standard practice in many mechanical applications, e.g. leaf springs, should be used in designing flexible pile dolphins.

(d) Resilience and Toughness

The strain energy equations for structural members subject to either direct stress or bending indicate that the amount of energy that can be absorbed per unit

volume of material without breakdown of elastic action depends on the factor $\frac{1}{2}\frac{S_e^2}{E}$. This factor is the modulus of resilience for members under direct tensile stress. For members in flexure, the modulus of resilience is some coefficient x $\frac{1}{2}\frac{S_e^2}{E}$. This modulus is useful in comparing the effectiveness of different structural materials in resisting energy loads. It is noted, then, that the ideal material for resisting energy loads in service in which the material must not incur permanent distortion, is one having a high modulus of resilience, that is, a material having a high proportional limit, like spring steel, and/or a material with a low modulus of elasticity, such as rubber.

Another useful index for comparing the resistances of different materials to energy loads is the modulus of toughness. This specific property is defined in strength of materials as the maximum amount of energy which a unit volume of the material will absorb without fracture. A tough material is needed, therefore, to resist energy loads when the material in service is likely to be stressed beyond its yield point. Even with reasonable factors of safety, dolphin members can very possibly be subjected to stresses beyond their yield point, provided of course that the soil foundation does not fail or yield first. If a dolphin has sufficient strength beyond its elastic energy capacity, it may still be able to arrest the movement of a ship in an accident situation, without failure of the dolphin.

Average values of strength, resilience and toughness properties in flexure of some commonly used materials have been compiled from various strength of materials textbooks and are listed here in order to give the engineer an idea of their relative capabilities in dolphin structures.

Material	Proportional Limit - psi	Ultimate Strength - psi	Modulus of Elasticity - psi	Resilience in-lb per in^3	Toughness in-lb per in^3
Ordinary Structural Steel	33,000	60,000	30×10^6	2.0	1,000
Low Alloy, High Strength Steel	50,000	70,000	30×10^6	4.6	1,200
Spring Steel	140,000	220,000	30×10^6	36.3	490
Yellow Pine	9,000	14,700	1.99×10^6	2.2	11
Oak	8,200	15,200	1.78×10^6	2.1	11
Greenheart	11,700	21,700	3.01×10^6	2.5	15
Rubber*	300	-	150	300	-

*Subjected to direct stress

(e) Allowable Stresses for Dolphin Structures

Allowable working stresses must be of such magnitude as to assure, on the basis of experience and tests, the safety of a structure against failure. This is of particular importance for dolphin structures which must be depended upon to provide safe berthing and mooring for vessels that may be of enormous cost.

The influences of impact loading on the mechanical properties of materials varies, depending upon the material and upon the duration of load.

(i) Results of investigations on impact strengths of metals show that both their impact yield and ultimate strengths are greater than their static strengths (Refs. 16 and 29). The increases in yield strength may be from 10 to 90 percent, and increases in ultimate strength from 2 to 80 percent, with the larger percentages being for the higher loading rates.

(ii) Data on impact loading of concrete which is notably weak in tension are also quite definite in indicating increased strength with increasing rate of strain. During an investigation of the stresses in reinforced concrete piles during driving, Glanville et al. (Ref. 22) observed large tensile elastic strains in the concrete. These strains, which occurred during the oscillatory pulses from impact, corresponded to tensile stresses as high as 2000 psi.

(iii) Tests on wood members subjected to impact loads are similar to those on steel and concrete in showing that wood may without damage be subjected for a short time to forces which would cause failure if applied for a longer time. The graph of Figure 1.9 illustrates the relationship between duration of load and working stress for wood (Ref. 68).

The increase in yield and ultimate strengths of structural materials with increasing strain rates seems to indicate that larger design stresses for impact loading might be permitted compared to values of stress used for static loading. There are several considerations, at least in connection with the design of dolphins, however, which do not justify taking full advantage of this favorable characteristic.

(i) In practice, it is difficult to estimate rate of strain, so that the amount of increase in yield stress or design stress over the static value is indeterminate.

(ii) Design impact loads cannot be accurately determined as is evident from the range in values used for energy loss and for impact or berthing velocity.

(iii) If inhomogeneities or other defects exist in a material, its energy absorption capacity under impact loading decreases more significantly than under static loading.

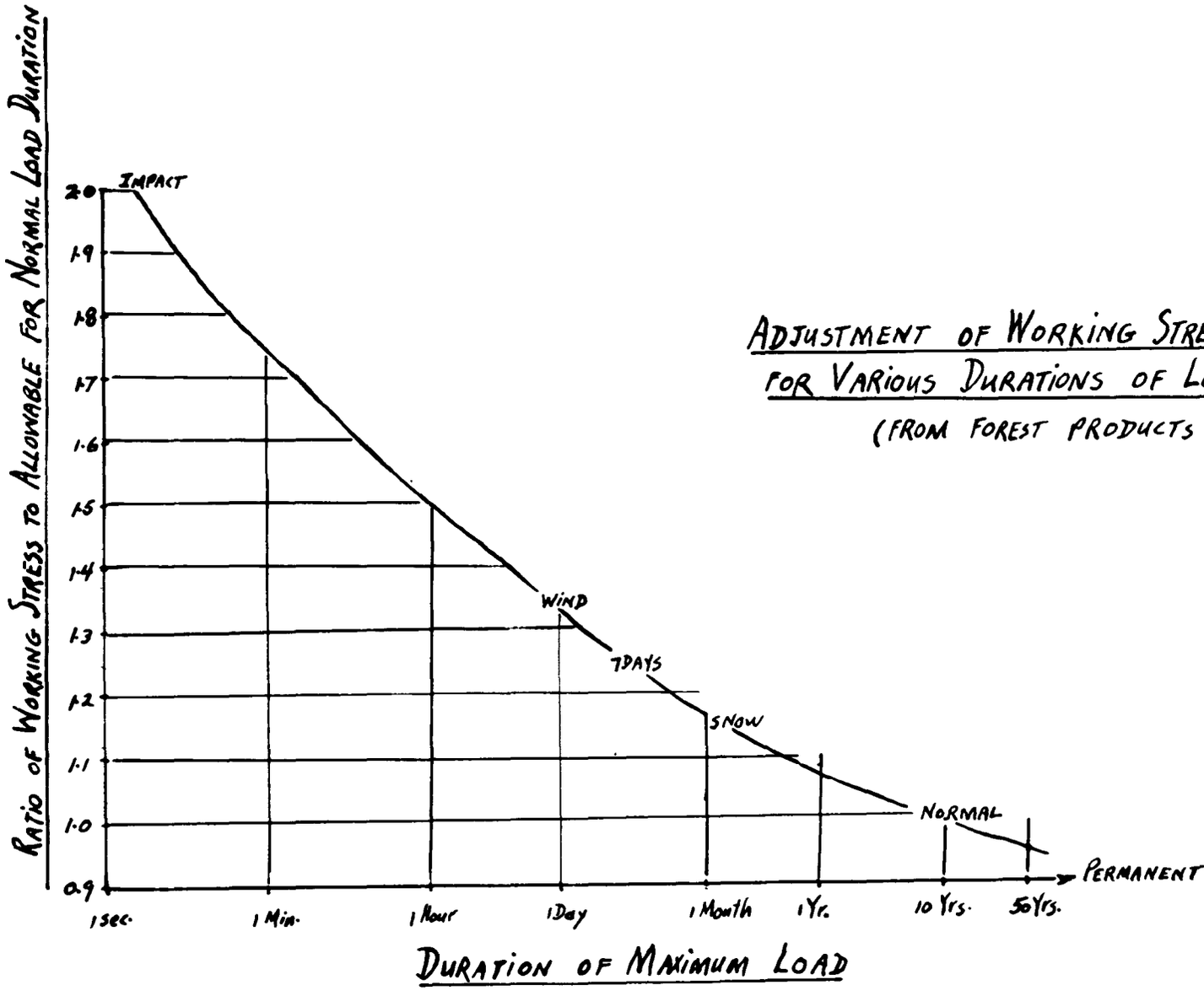

ADJUSTMENT OF WORKING STRESS IN TIMBER FOR VARIOUS DURATIONS OF LOAD

(FROM FOREST PRODUCTS LABORATORY REPORT No. R1916)

Figure 1.9

(iv) Overloading beyond the yield stress under impact loading is more serious than for static loading, since permanent deformations produced at first impact may increase with continued impact loads.

It is recommended, therefore, that the design stresses selected for dolphins which must resist impact loads be not higher than 133 percent of the allowable stresses used for static loads. This figure corresponds to the increase allowed by most structural codes for wind loads and results in a factor of safety with respect to yield strength of about 1.2 for steel and 1.6 for wood.

2. Structural Materials for Dolphins

For any given pile supported according to the arrangements usually encountered in dolphin structures (see Fig. 1.10), the following important relationships should be recognized:

(i) The energy that can be absorbed by a pile is proportional to the length of the pile. So far as capacity for resisting the energy of berthing vessels is concerned, increased length arising from large water depth is an advantage.

(ii) The lateral load P that the pile can resist is inversely proportional to the length of pile. Therefore, from the point of view of static mooring pulls once vessels are berthed, increased length of pile is a disadvantage.

WORK ABSORBED BY DOLPHINS IN BENDING

CASE I - CANTILEVERED PILE DOLPHIN

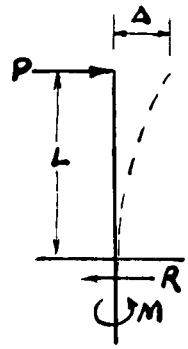

$$P = \frac{M}{L} \quad ; \quad R = P$$

$$\Delta = \frac{PL^3}{3EI} = \frac{ML^2}{3EI}$$

$$U = \frac{1}{2}\Delta P = \frac{M^2 L}{6EI}$$

CASE II - PILED DOLPHIN W/ BOTTOM FIXED, TOP HINGED

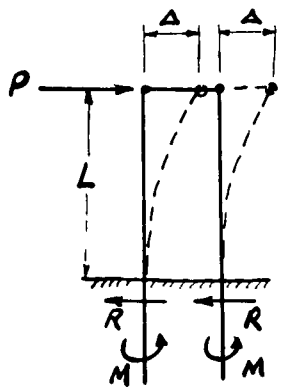

$$P = \frac{nM}{L} \quad ; \quad R = \frac{P}{n} \qquad \text{where } n = \text{number of piles}$$

$$\Delta = \frac{PL^3}{3nEI} = \frac{ML^2}{3EI}$$

$$U = \frac{1}{2}P\Delta = \frac{P^2L^3}{6nEI} = \frac{nM^2L}{6EI}$$

CASE III - PILED DOLPHIN W/ BOTTOM FIXED, TOP RIGID

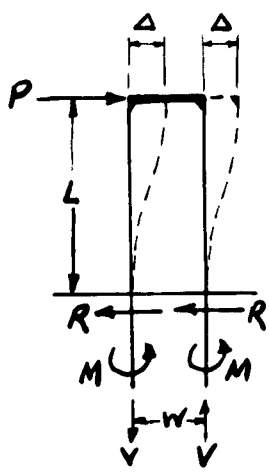

$$P = \frac{2nM}{L} \quad ; \quad R = \frac{P}{n} \quad ; \quad V = \frac{PL}{nW}$$

$$\Delta = \frac{PL^3}{12nEI} = \frac{ML^2}{6EI}$$

$$U = \frac{1}{2}\Delta P = \frac{P^2L^3}{24nEI} = \frac{nM^2L}{6EI}$$

Figure 1.10

(iii) The deflection of the pile under lateral load P is proportional to the cube of the length of pile.

Also, for any given length of pile and any S_a, the allowable working stress for the pile, the following important relationships may be stated:

(i) The energy that can be absorbed by the pile is proportional to the square of the allowable working stress. If for instance we have a given amount of kinetic energy which must be absorbed by wood piles, and an allowable stress of 6,000 psi is used, then four piles might be needed. If, however, the more usual magnitude of allowable stress, e.g. 1,200 psi, is taken, then 100 piles would be required.

(ii) The lateral load P that the pile can resist is proportional to the allowable working stress.

(iii) The maximum allowable deflection of the pile is controlled by the allowable working stress.

The latter observations indicate that any small increase in working stress is very valuable for resisting both static and energy loads.

(a) Comparison of Work Absorption and Lateral Resistance of Typical Structural Members in Bending

Table 1.2 shows resistance moments for typical structural members. The relationship between energy absorption and length is illustrated in Figure 1.11 for some

TABLE 1.2

RESISTANCE MOMENTS OF TYPICAL DOLPHIN MEMBERS

Member	Weight per Ft. lbs	Section Modulus inches³	Allowable Stress psi	Resistance Moment inch-Tons
24 WF 100	100	249	33,000 (1)	4110
18 WF 105	105	202	33,000 (1)	3330
12 WF 85	85	116	33,000 (1)	1920
14 BP 117	117	173	33,000 (1)	2860
36" ϕ × 1½" Steel Pipe	190	488	33,000 (1)	8050
24" ϕ × ⅝" Steel Pipe	156	261	33,000 (1)	4300
16" ϕ Greenheart	102	366	11,700	2140
14" ϕ Greenheart	77	242	11,700	1416
12" ϕ Greenheart	61	143	11,700	836
14" ϕ Oak	44	242	8,000	967
14" ϕ Yellow Pine	41	242	9,300	1125
48" ϕ × 1½" High Tens. Steel	491	2470	43,000 (2)	53100
36" ϕ × 1" High Tens. Steel	371	933	47,000 (2)	21900
30" ϕ × 1" High Tens. Steel	310	638	47,000 (2)	15000
18" ϕ × ½" High Tens. Steel	94	123	50,000 (2)	3070
4A6 Algoma Box Pile	131	245	33,000 (1)	4040
24×24" R.C. w/8-1½" ϕ Bars	600	2300	f_s = 24,000 psi n = 7	1200
16×16" R.C. w/4-1½" ϕ Bars	267	681	f_s = 24,000 psi n = 7	490
36" ϕ × 4" P.C. w/12 Cables	419	2900	Ultimate - based on actual test	6490
36" ϕ × 4" P.C. w/8 Cables	419	2900	Ultimate - based on actual test	4734

(1) Corresponds with Yield Stress for ASTM-A7 - Structural Carbon Steel

(2) Corresponds with Yield Stress for ASTM-A242 - High Strength, Low Alloy Steel

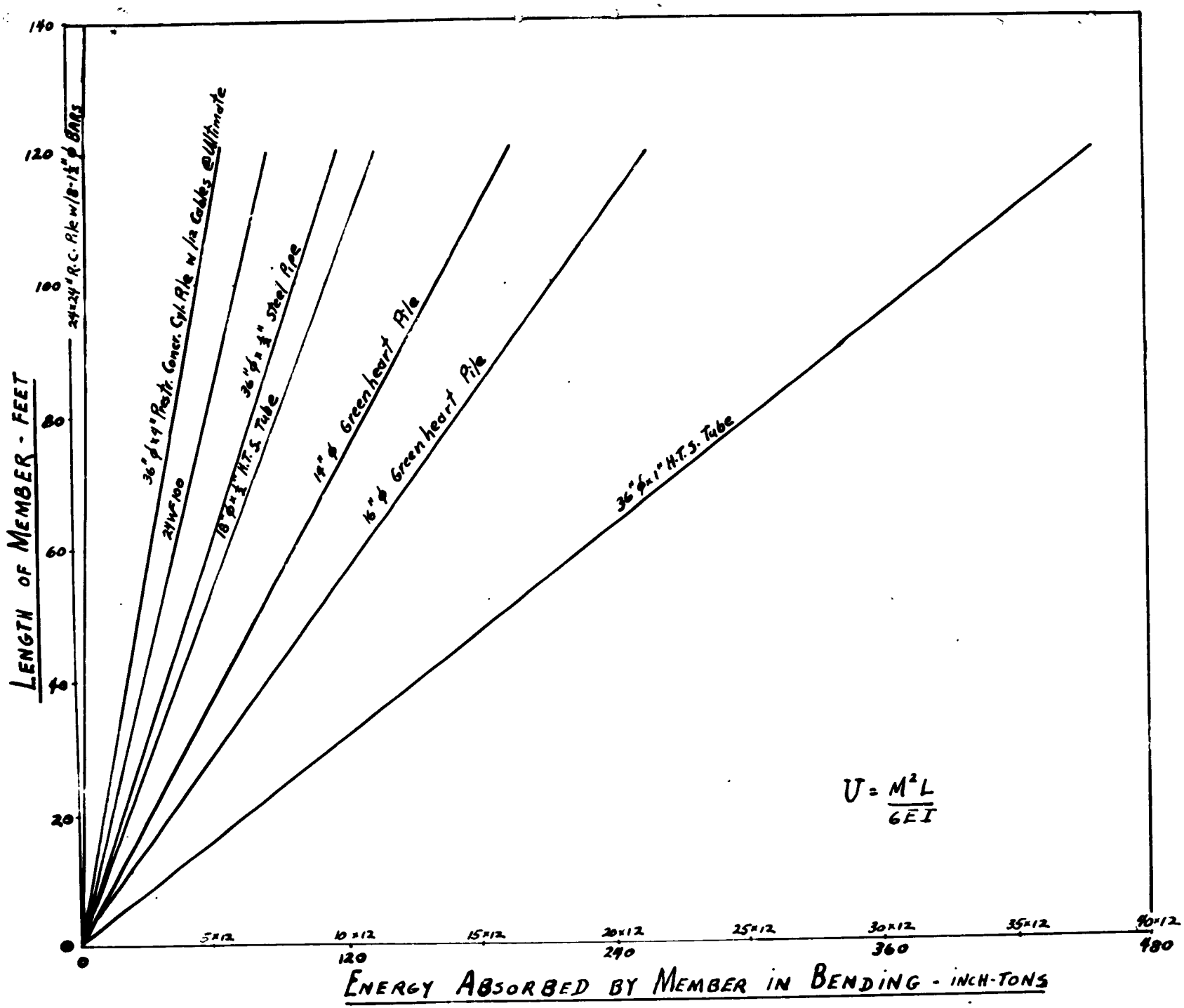
LENGTH OF MEMBER - FEET
140
120
100
80
60
40
20
0
24"x24" R.C. Pile w/8-1 1/2" ϕ BARS
36" ϕ x 4" Reth. Concr. Cyl. Pile w/12 Cables @ Ultimate
24" WF 100
36" ϕ x 1/2" Steel Pipe
18" ϕ x 1/2" H.T.S. Tube
14" ϕ Greenheart Pile
16" ϕ Greenheart Pile
36" ϕ x 1" H.T.S. Tube
$U = \frac{M^2 L}{6EI}$
5x12
10x12
15x12
20x12
25x12
30x12
35x12
40x12
120
240
360
480
ENERGY ABSORBED BY MEMBER IN BENDING - INCH-TONS

Figure 1-11

of the more representative members. This chart is applicable for bending under all three conditions shown in Figure 1.10. In preparing Table 1.2 and Figure 1.11, allowable stresses have been selected with a view to giving a fair and reasonable comparison of the effectiveness of the different structural members considered. Accordingly, average values of stress at the proportional limit have been used for the steel and wood members, and ultimate strengths have been used for the reinforced and prestressed concrete members which have no well defined yield point. The resistance moments indicated for the prestressed concrete cylinders are based on actual test results (Ref. 59).

On the basis of energy absorption per unit weight, the structural members compare as follows:

	inch-tons per ton
14" ø Greenheart Pile	42.4
16" ø Greenheart Pile	42.2
18" ø x 1/2" H.T.S. Tube	24.2
36" ø x 1" H.T.S. Tube	20.5
24 WF 100 Column Section	15.0
36" ø x 1/2" Steel Pipe	10.4
36" ø x 4" Prestressed Concrete Cyl. Pile w/12 Cables	2.66
24" x 24" R.C. Pile w/8-1½" Bars	0.16

It is seen therefore that greenheart piles and tubular piles of high tensile steel are very well suited for energy absorption in bending, whereas reinforced concrete and prestressed concrete piles are very inefficient (reinforced concrete much more so than prestressed concrete).

Figure 1.12 shows the relationship between length and static load resistance of the representative structural members. The chart is applicable for Cases I and II of Figure 1.10 and can be used for Case III by doubling the values of lateral resistance obtained for Case I or II. The chart shows that the reinforced concrete and greenheart piles do not offer as much lateral load resistance as the steel and prestressed concrete members. On the basis of lateral load resistance per unit weight for an effective length of 50 ft., however, the members compare as follows:

	tons per ton
36" ø x 1" H.T.S. Tube	3.94
36" ø x 1/2" Steel Pile	2.83
24 WF 100 Column Section	2.74
18" ø x 1/2" H.T.S. Tube	2.14
16" ø Greenheart Pile	1.40
14" ø Greenheart Pile	1.23
36" ø x 4" P.C. Cyl. Pile w/12 Cables	1.03
24" x 24" R.C. Pile	0.13

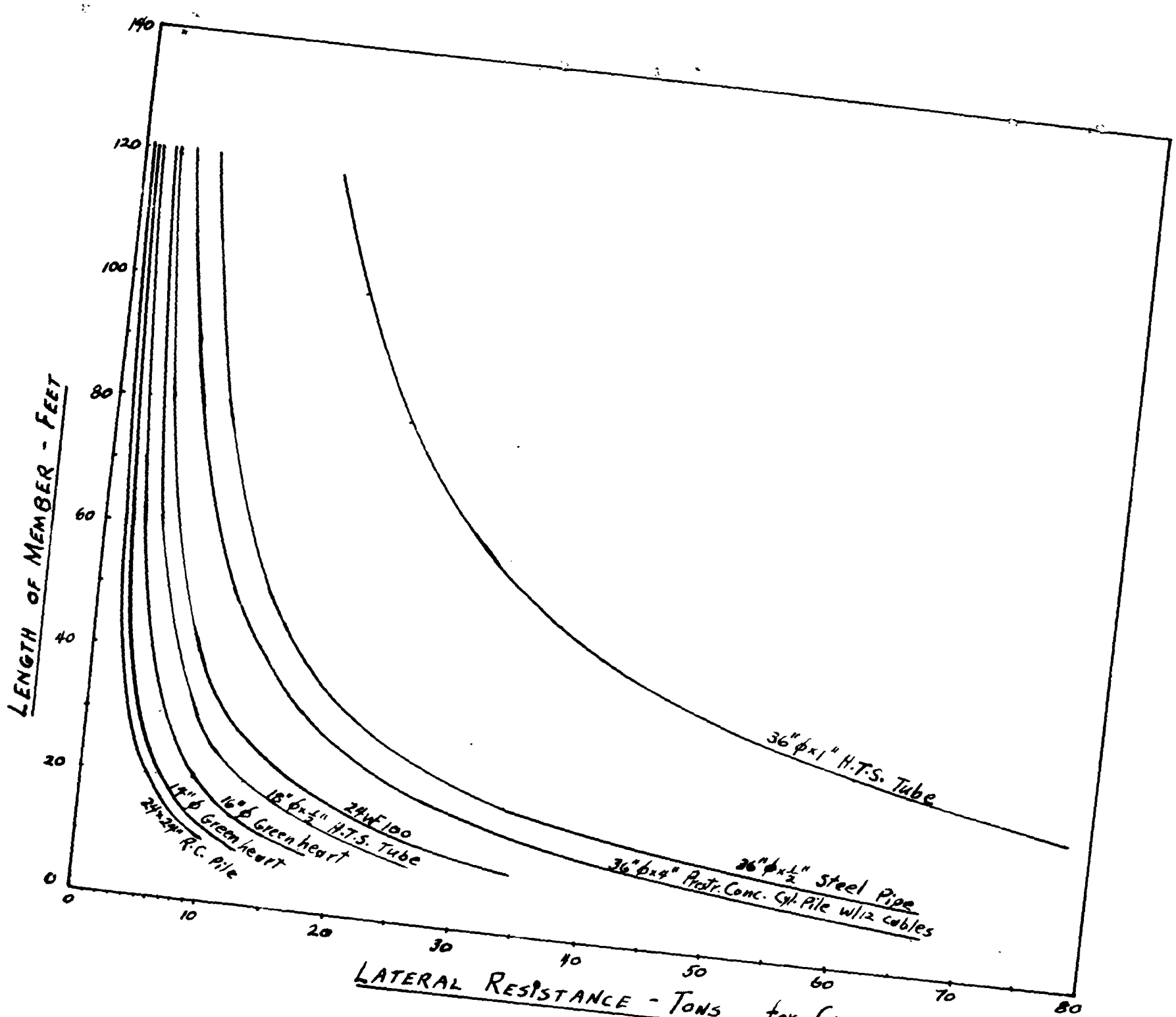

NOTE: FOR CASE III LATERAL RESISTANCE IS DOUBLED

Figure 1.12

From the standpoint of static load resistance by bending, it is evident that greenheart is not as efficient as steel, and that prestressed concrete and reinforced concrete again are the least efficient. It appears, then, that the only effective way of using prestressed concrete, and particularly reinforced concrete, in dolphin structures is by raking the piles so that any horizontal load can be resisted by direct stress, and if any significant amount of energy absorption is required, only in combination with high energy absorbing fender systems.

(b) Comparison of Dolphins Constructed of Different Structural Members

Figure 1.13 shows a comparison of greenheart, ordinary structural steel, and high strength steel piles in a piled dolphin. Calculations are based on a construction of piles with both ends fixed against rotation. The data indicates that both the greenheart and high strength steel dolphins have very good energy absorption capacity. However, the lateral loads resisted by the high strength steel dolphins, due to their larger resistance moment, are considerably greater than those resisted by the greenheart dolphins.

A similar comparison for the case of a dolphin with its top hinged or free is illustrated in Figure 1.14. The respective energy capacities are the same as for the

COMPARISON OF DOLPHINS - 4 PILES ; RIGID CONNECTION AT TOP

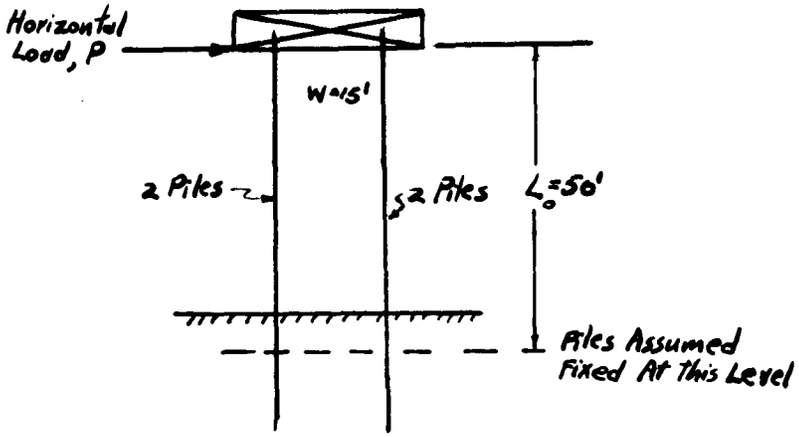

	24 WF100	36"ϕ × ½" Steel Pipe	16"ϕ Greenheart	14"ϕ Greenheart	18"ϕ × ½" H.T.S. Tube	36"ϕ × 1" H.T.S. Tube	30"ϕ × 1" H.T.S. Tube
Work Absorbed - inch-Tons	151	198	429	325	229	762	627
Horizontal Load Resisted - Tons	54.8	107.4	28.5	18.9	41.1	292	200
Deflection under Load - inches	5.5	3.7	30.1	34.5	11.1	5.2	6.3
Resistance Moment of Pile - in-Tons	4110	8050	2140	1416	3070	21900	15000
Axial Force in each Pile due to overturning Moment - Tons	45.6	89.5	23.8	15.8	34.2	243	167
Allowable Stress in Bending - KSI	33 (1)	33 (1)	11.7 (2)	11.7 (2)	50 (3)	47 (3)	47 (3)

(1) Corresponds with Yield Stress for ASTM-A7-Structural Carbon Steel.
(2) Corresponds with Proportional Limit of Greenheart.
(3) Corresponds with Yield Stress for ASTM-A242-High Strength, Low Alloy Steel for thickness indicated.

Figure 1.13

COMPARISON OF DOLPHINS - 4 PILES; HINGED CONNECTION AT TOP

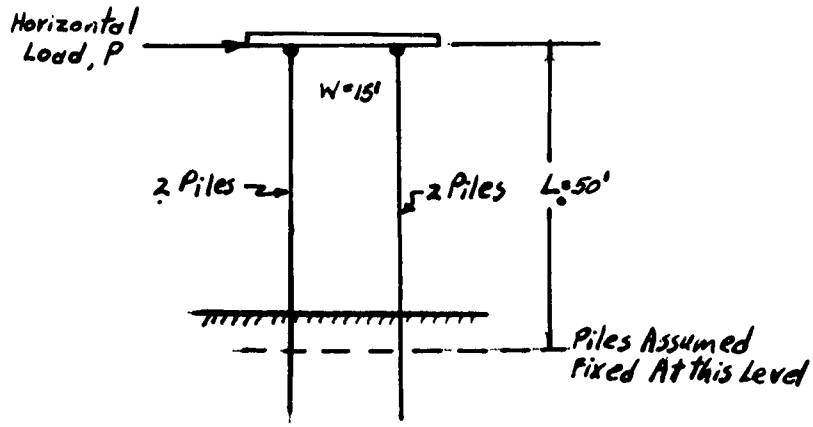

	24 WF100	36" ϕ x $\frac{1}{2}$" Steel Pipe	16" ϕ Greenheart	14" ϕ Greenheart	18" ϕ x $\frac{1}{2}$" H.T.S. Tube	36" ϕ x 1" H.T.S. Tube	30" ϕ x 1" H.T.S. Tube
Work Absorbed - inch-Tons	151	198	429	325	229	762	677
Horizontal Load Resisted - Tons	27.4	53.7	14.3	9.4	20.6	146.0	100
Deflection under Load - inches	11.0	7.3	60.1	69.0	22.3	10.4	12.5
Resistance Moment of Pile - in-Tons	4110	8050	2140	1416	3070	21900	15000
Axial Force in each Pile due to overturning Moment - Tons	0	0	0	0	0	0	0
Allowable[1] Stress in Bending - Ksi	33	33	11.7	11.7	50	47	47

(1) See Notes in Figure 1.13

Figure 1.14

rigidly connected dolphin. Because of the greater flexibility in the hinged dolphin, however, the respective values of lateral load resistance are much smaller.

It will be noted that the axial forces in the piles of the hinged dolphin are zero whereas in the rigidly connected dolphin the axial forces (both tension and compression) are quite significant. Thus, whether one arrangement is more favorable than the other depends also on the soil conditions, as obviously, if the rigid dolphin is to be adopted, the soil must provide a good tension hold and good bearing resistance for the piles.

Usually in dolphin design, thought must not only be given to either work absorption or horizontal load resistance, but also to the most favorable combination of both, taking into account the work absorbed from berthing of the vessel, on the one hand, and the force resulting from wind pressure or pull from mooring ropes on the other.

Assuming requirements of 800 inch-tons energy capacity and 100 tons static load resistance, construction on eight 16" ø greenheart piles rigidly connected at the top -- though having adequate energy absorption capacity -- would fail under the static load unless the number of piles were doubled. This however would entail a much greater work absorption capacity, i.e. resilience, than is needed (and which might be considered a disadvantage in certain respects). On the other hand, construction on four

30" ø x 1" high strength steel tubes hinged or flexible at the top would provide the required lateral load resistance, but the energy absorption would not be quite sufficient. By increasing the number of tubes to six, a satisfactory solution will be reached in both respects. Practically any combination of energy capacity and static load requirements can be easily met with tubular steel sections by varying the diameter, wall thickness, or steel quality.

As far as determining the most economical solution, a comparison of costs made on the basis of expenditure either per inch ton of energy absorbed or per ton horizontal force resisted can be erroneous, and alternate constructions should be compared as a whole. For the alternate solutions given in the preceding paragraph, the tubular steel dolphin is about twice as expensive as the greenheart dolphin based only on the purchase cost of the piles. As mentioned previously, however, due consideration must be given to the advantages and disadvantages inherent in the use of either material for the specific case -- e.g. time of delivery, durability of material with time and under eccentric loads, and the consequence of excessive impacts either from head-on or glancing blows -- as well as to costs of driving, making the necessary connections, bracings, etc., and the costs of maintenance.

CHAPTER II

THE SOIL MECHANICS OF DOLPHIN DESIGN

When a dolphin is being built most of the design effort usually seems to go into the design of its structure; yet it is equally important to consider the soil mechanics of its situation. In fact, the soil mechanics of a site will have a large influence on the initial choice of design for a dolphin. For instance, if a dolphin is to be built in fairly deep water on hard sand, a cantilevered steel energy absorbing dolphin might well be chosen, while if the bottom consists of very soft mud to a considerable depth, a rigid structure would be chosen which did not depend on lateral loading of its piles.

This leads to a general principle in dolphin design: that it is generally most economical and satisfactory to build a flexible, cantilevered dolphin, but that such a design should only be used where the soil can take a lateral load without yielding more than a specified amount even though the load should be applied cyclically. Failing that, a rigid structure should be used on a poor soil or a cellular, sheet pile dolphin on rock.

If a pile group dolphin is to be designed, it is necessary to note some general considerations. Firstly, the load capacity of a group of piles whether loaded axially or

laterally will be less than the sum of the capacities of the piles acting individually. Secondly, the distribution of soil resistance for a single pile is very different from that for the piles in a pile group. If the piles of a pile cluster dolphin are driven fairly close together, their combined effect can be thought of as being approximately that of a cylinder of diameter equal to that of the whole group.

This chapter is concerned with piles loaded laterally and with piles loaded vertically both in compression and in tension. In each case it is necessary to know three things about a pile:

(1) the ultimate load a pile can carry;

(2) the maximum load a pile can carry which, when applied repeatedly, will not cause an ever-increasing deflection of the pile;

(3) the load-deformation curve of a pile in the elastic range.

A. Vertical Bearing Capacity of a Pile

Following Chellis (Ref. 12) and Minikin (Ref. 42) the use of the Engineering News formula is not recommended as it can sometimes give very unsafe results (see comparison of theoretical calculations with full-scale tests given in the back of Chellis' book).

Although the bearing load a pile can carry and the resistance a soil offers to a pile driven by dynamic loads

would not at first seem to have much connection with one another, Hiley developed the following formula connecting the two, based on an analysis of the actual driving conditions and on much practical data.

$$R = \frac{\eta \; W \; h_1}{s + \frac{1}{2} c} + W + w$$

where R = total resistance of ground

η = efficiency of hammer blow

h_1 = virtual fall of the hammer in inches = λh

s = penetration of pile under last blow in inches

c = temporary compression

W = weight of hammer

w = weight of pile

The factor λ represents the effect of losses due to friction and so on in the hammer mechanism. For an S.A. steam hammer $\lambda = 0.9$, for a drop hammer with a wire rope to a friction winch $\lambda = 0.8$, and for a freely falling drop hammer $\lambda = 1.0$.

A safe bearing load of 0.5 R is recommended by Mr. Hiley. Some authors recommend the use of a greater factor of safety, but in dolphin design this is not necessary. The use of the Hiley formula is recommended by both Chellis and Minikin as being very close to recorded test results.

Values of the efficiency η and the temporary compression c are given by the following Tables.

VALUES OF EFFICIENCY η

Ratio w/W wt. of Pile / wt. of Ram	Driven by double-acting hammer		Driven by single-acting hammer	
	Steel Sheet Piles or R.C. Piles	Timber Piles	Timber or R.C. Piles with helmet	Timber or R.C. Piles with used cap
½	0.75	0.72	0.69	0.67
1	0.63	0.58	0.53	0.50
1½	0.55	0.50	0.44	0.40
2	0.50	0.44	0.37	0.33
2½	0.45	0.40	0.33	0.28
3	0.42	0.36	0.30	0.25
4	0.36	0.31	0.25	0.20
5	0.31	0.27	0.21	0.16
6	0.27	0.24	0.19	0.14

Length of Pile, ft.	Temporary Compression c in inches							
	Easy Driving		Medium Driving		Hard Driving		Very Hard Driving	
	a	b	a	b	a	b	a	b
20	0.23	0.28	0.36	0.67	0.49	0.65	0.57	0.79
30	0.27	0.31	0.44	0.53	0.61	0.74	0.73	0.91
40	0.31	0.34	0.52	0.59	0.73	0.83	0.89	1.03
50	0.35	0.37	0.60	0.65	0.85	0.92	1.05	1.15
60	0.42	0.40	0.68	0.71	0.97	1.01	1.21	1.27

In this Table, (a) is for timber piles and (b) is for R.C. piles fitted with a helmet and dolly.

For vertical loading of piles and with a factor of safety of 2, the deflection of a pile under the allowable load can be taken to be entirely recoverable.

A disadvantage of the Hiley formula is that it does not take into account the length of embedment of the pile. For a further discussion of this, see Minikin (Ref. 42), Chapter 1 and page 193.

B. Pull-Out Strength of a Pile

Generally the pull-out strength of a pile is taken by rule of thumb to be 50 percent of the bearing strength. This will obviously be very conservative for many piles.

If the pile is primarily an end-bearing pile it should not be used in a design in which it is subject to uplift. If it is a friction pile driven in, say, sand, it would seem reasonable that its pull-out resistance should be nearly that of its bearing resistance. Hence for such piles it is suggested that the pull-out strength be taken as 30 percent of the bearing resistance.

In cohesive soils, the pull-out strength should be taken as the bearing resistance of the pile plus twice the weight of the pile less its end-bearing capacity. If d is the diameter of the tip of the pile, w is the weight of the

pile, R is its bearing resistance and C is the undisturbed shear strength of the soil beneath the pile, then the pull-out capacity T of the pile may be taken as

$$T = R + 2\,w - 9\,C\,\frac{\pi}{4}\,d^2$$

where the figure of 9 has been found to be satisfactory for cohesive soils.

Again using a factor of safety of 2 for dolphin construction, the deflection due to maximum allowable pull-out force will be entirely recoverable.

C. Lateral Loading of a Pile

1. Ultimate Strength of a Laterally-Loaded Pile

The design of a pile to resist a given lateral load in sandy soil can be carried out satisfactorily by the method given by Blum (Ref. 9), which is also to be found in the Peine pile handbook (Ref. 56).

Blum assumes that when a single pile fails, it pushes up a wedge of soil of constant thickness equal to its breadth, and that this wedge draws with it pyramid-shaped pieces on either side of it, as shown in Figure 2.1. The wedge itself results in a triangular load distribution on the soil, and the side pieces lead to an extra distributed load which is parabolic in shape. The dotted line in the Figure shows the probable shape of an actual failure

surface. In the ensuing analysis and discussion of this problem the following notation will be used:

γ	Soil density - include uplift for static loads, neglect for dynamic loads
E_p	Lateral soil pressure due to wedge
E_s	Lateral soil pressure due to side pieces
e_p	Pressure at bottom of pile due to wedge
e_s	Pressure at bottom of pile due to side pieces
K_p	Soil reaction constant = $\tan^2(45 + \phi/2)$
P	Force on top of pile
d	Deflection at top of pile
d'	Deflection at surface of pile
f_w	γK_p
b	Breadth of pile
h	Height of pile above surface
x	Distance below surface
t_o	Effective depth of embedment of pile
t	Actual depth of embedment of pile, taken as 1.2 t_o
I	Second moment of area of pile
W	Resisting moment in direction of force
M_{max}	Maximum moment on the pile
E	Young's modulus of the pile
ϕ	Angle of friction of soil

ASSUMED FAILURE MODE OF A LATERALLY LOADED PILE

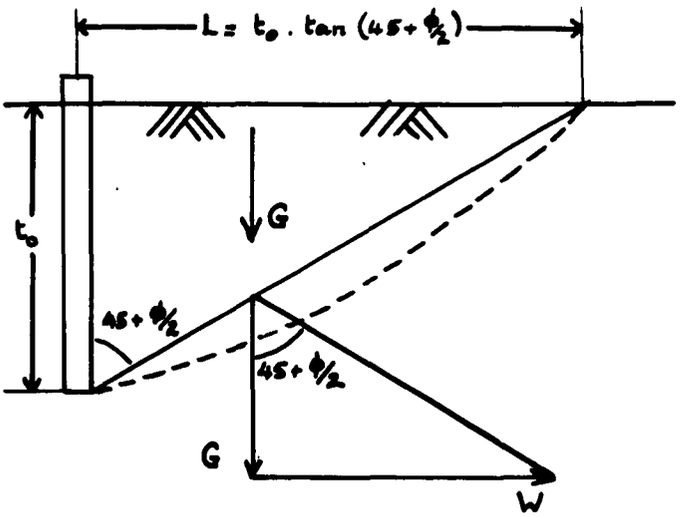

GEOMETRY OF FAILURE

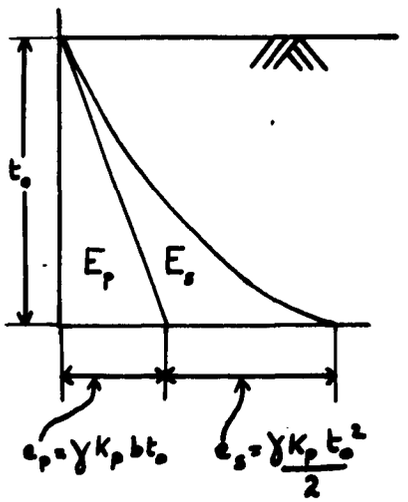

LOAD DISTRIBUTION

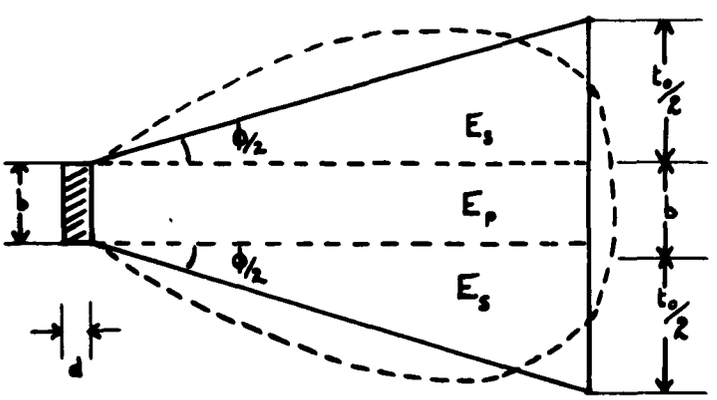

FIG. 2.1

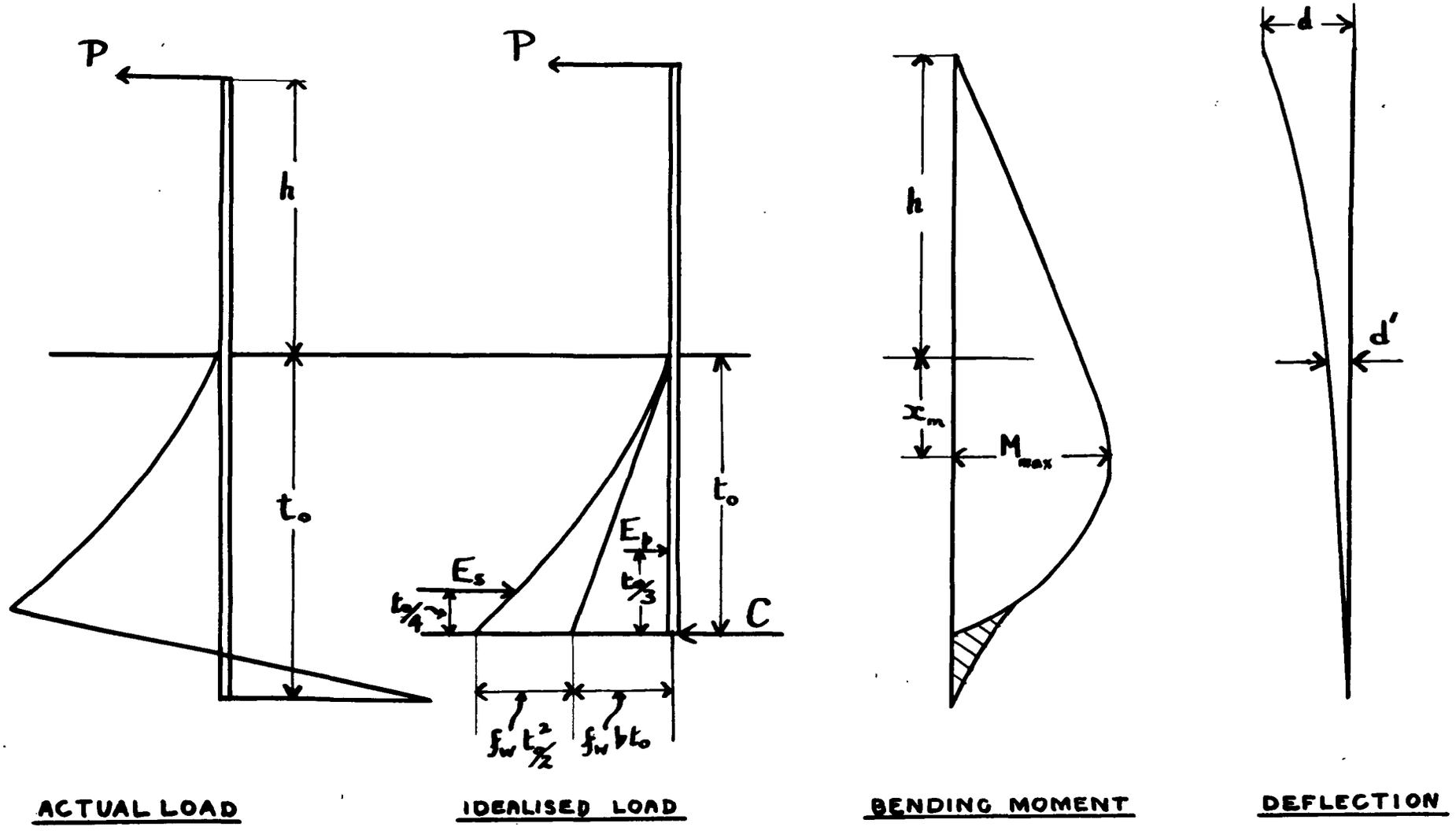
P
h
t_o
P
E_s
$t_o/4$
E_p
$t_o/3$
t_o
C
$f_w t_o^2/2$
$f_w b t_o$
h
x_m
M_{max}
d
d'
ACTUAL LOAD
IDEALISED LOAD
BENDING MOMENT
DEFLECTION

FIG 2.2

From Figure 2.2 we can see that

$$W = E_p + E_s$$

$$= \gamma K_p \left[b \frac{t_o^2}{2} + \frac{t_o^3}{6} \right]$$

$$= f_w \left[b \frac{t_o^2}{2} + \frac{t_o^3}{6} \right]$$

The approximate distribution of soil pressure on a laterally loaded pile is also shown in Figure 2.2. If an effective depth t_o is taken which is the actual depth of penetration divided by 1.2, the load distribution can be taken to be that of Figure 2.2.

Considering Figure 2.2 and equating moments we get

$$P(h + t_o) - f_w \left[\frac{bt_o^3}{6} + \frac{t_o^4}{24} \right] = 0$$

$$t_o^4 + 4\, b t_o^3 - \frac{24}{f_w} P(h + t_o) = 0 \qquad (1)$$

$$M_x = P(h + x) - f_w\left(\frac{bx^3}{6} + \frac{x^4}{24}\right) \qquad (2)$$

For maximum moment, $x = x_m$ and $\frac{dM}{dx} = 0$

$$P - f_w \left(\frac{bx_m^2}{2} + \frac{x_m^3}{6} \right) = 0$$

$$P = \frac{1}{6} f_w x_m^2 (3b + x_m) \qquad (3)$$

and

$$M_{max} = \frac{1}{24} f_w x_m^2 \left[3x_m^2 + (4h + 8b)x_m + 12\, hb \right] \qquad (4)$$

and putting (3) in (1), we get a relation between t_o and x_m:

$$t_o^3 \left(\frac{t_o + 4b}{t_o + h}\right) = 4\ x_m^2(x_m + 3\ b) \qquad (5)$$

We then get the equation of the deflection at the top of the pile to be

$$d = \frac{1}{EI}\left[\frac{P(h + t_o)^3}{3} - \frac{f_w t_o^4}{360}\left[15\ b \cdot h + (3h + 12b)t_o + 2.5\ t_o^2\right]\right] \qquad (6)$$

Suppose we want to design a pile to withstand a given lateral load P. Equation (3) gives x_m if a value of b is assumed. Putting x_m into equation (4) gives the maximum moment in the pile and hence the required section for the job, and putting it into equation (5) gives the required depth of embedment (remember that $t = 1.2\ t_o$). Then putting t_o and P into (6), the deflection of the pile top is obtained.

On the basis of the pile tests of Flemherde in 1951 and the dolphin tests of Holtenan in 1952, Müller (Ref. 47, pp. 31 and 63, as well as Hansa, 1953, No. 66/47, p. 1988) recommended that the formula (7) above of Blum be written in the form of the classic deformation formula $d = \frac{1}{3EI} PL^3$ for a fixed-end beam, where L is an effective length equal to $h + 0.78\ t_o$ or $h + 0.65\ t$. Equation (7) then becomes

$$d = \frac{P}{3EI}(h + 0.78\ t_o)^3 = \frac{P}{3EI}(h + 0.65\ t) \qquad (7a)$$

When using the Blum method for the calculation of the lateral resistance of a closely spaced group of piles, the strength of the group is not the sum of the strengths calculated for each individual pile. Instead, the group should be treated as a single cylinder whose diameter is 80 percent of that of the group.

An example of a design calculation carried out using this method is found in Chapter III, section B. In Appendix A, the ultimate strength of a laterally-loaded single pile is calculated by the Blum method and is shown to agree closely with that obtained from a full-scale test.

2. Recoverable Limit of a Laterally-Loaded Pile

If a pile is loaded laterally with even quite a small load it will have a small permanent deflection when the load is removed. However, if the same small load is applied to the pile and removed a number of times, the pile will reach some point beyond which it will not deflect. This will happen for all loads below some critical load; but for repeated loads greater than this value the pile or the dolphin structure of which it is a part will continue to deflect until it fails completely. This critical load, called here the Shake Down Load, is of vital importance in the design of an intermittently loaded maritime structure such as a dolphin.

Unfortunately there have been all too few lateral load tests on piles (see the end of this Chapter); and of the tests that have been performed, none to the authors' knowledge have been concerned with the effects of repeated loading. In 1958, R. D. Gaul (Ref. 21) carried out some cyclic tests on piles but was concerned with a different problem. In the aircraft industry at the present time almost all an aircraft's structure is designed by fatigue strength, not ultimate strength; but although the Civil Engineer should be equally concerned with the life of his intermittently loaded structures, he has not at his disposal results based on extensive testing such as those available to the Aircraft Structural Engineer.

Hence it is only possible to look at the load-deflection curves of a number of static pile tests and work as best as possible from that information. In this way, we are led to the recommendation that the Shake Down Load be taken as one-third of the ultimate load as the proportional limit for most tests seems to lie above this figure.

For a proposed testing specification, see Appendix B.

3. A Laterally-Loaded Pile in an Elastic Foundation

When the structure of a dolphin is being designed and analyzed it is convenient to think of the piles as being fixed a few feet below the surface of the soil, so

that the deflections of the structure can be assumed to be linear and elastic. Many building codes state that the point of fixity should be taken as 5 ft. below the surface in good soils and 10 ft. below the surface in bad soils. In fact, the actual load deflection characteristics of a laterally-loaded pile are far from being linear even in its elastic range.

A method has been developed by Palmer and Thomson (Ref. 54) to calculate the deflections and loads of a laterally-loaded pile and this has been further developed by Gleser (Ref. 23) and by Palmer and Brown (Ref. 36). The method has been programmed for use with an IBM 650 Computer.

In this method, the soil is assumed to be linearly elastic with a modulus of elasticity which varies with soil depth. The basic differential equation is

$$EI \frac{d^4y}{dx^4} = k\left(\frac{x}{L}\right)^n y \qquad (1)$$

where E = modulus of elasticity of the pile

I = moment of inertia of the pile/unit width

y = deflection of the pile at any point along its length

x = the depth of any point below grade

L = the embedded length of the pile

k = the modulus of earth reaction at the lower end of the pile

n = a positive parameter

In equation (1), k is the elastic modulus at the bottom of the pile and the parameter n governs the distribution of the modulus along the pile.

Equation (1) is solved by turning it into a difference equation. The pile is divided into a number of equal divisions, each of length λ. Then writing the usual differential equations of an elastic beam as difference equations, we have at any point m on the pile:

$$\text{Slope} = \frac{y_{m+1} - y_{m-1}}{2\lambda}$$

$$\text{Bending Moment/Unit Width} = EI \cdot \frac{y_{m+1} - 2y_m + y_{m-1}}{\lambda^2}$$

$$\text{Shear/Unit Width} = EI \cdot \frac{1}{2\lambda^3}(y_{m+2} - 2y_{m+1} + 2y_{m-1} - y_{m-2})$$

$$\text{Pressure/Unit Width} = k\left(\frac{m\Delta}{L}\right)^n y_m = EI \cdot \frac{1}{\lambda^4}(y_{m+2} - 4y_{m+1} + 6y_m - 4y_{m-1} + y_{m-2})$$

Various numerical methods are available for the solution of these equations. The Soden method is recommended for use with a desk calculator while, if an IBM Computer is available, the Petrie program or a program written at Princeton which also produces bending moments, slopes and shears along the pile could be used.

A fourth order difference equation needs four boundary conditions. These are that the shear and the bending moment at the bottom of the pile are zero, and that for a free-head pile, at the top the shear is the specified lateral load, while the bending moment is zero. For a fixed-head pile, the shear is again specified, but the other condition is now that the slope of the pile is zero.

No numerical method is stated here. Instead, the reader who wishes to go further into the details of the calculations involved is advised to read the papers by Mason and Bishop and by Palmer and Brown (Ref. 36). Other relevant references are (23), (37) and (54).

The values of k and n needed for equation (1) have to be obtained directly from a test on a free-headed pile, from which they are found by curve-fitting. No method has yet been found for obtaining k and n directly from soil tests.

With this method, the maximum bending moment a pile will be subjected to can be found; and more important for the design of dolphins in which energy absorption capacity is a major criterion, load deflection curves can be plotted for piles subjected to lateral loads or moments. These curves can then be used as part of an analysis to determine the maximum energy a dolphin can absorb.

Gleser (Ref. 23) obtained values of k and n for a free-head pile which when used for the calculation of the deflection curves of a fixed-head pile corresponded closely.

This method can also be used to calculate the effective depth of fixity of a pile in the soil. If this can be found, the subsequent structural analysis of a dolphin is made much easier and the results are more reliable.

4. Summary of Lateral Load Tests

The results of a number of lateral load tests on various types of piles in different soils are summarized in this section. For timber piles, effective depths of fixity d have been worked out using the simple formula

$$\Delta = \frac{Pd^3}{3EI}$$

It can be seen from the table that almost all values lie between the generally accepted rule-of-thumb values of 5 ft. in firm soils and 10 ft. in poor soils. But although these values of depth of fixity are suitable for use with timber piles, it is thought that for stiffer piles the point of fixity should be further down in the soil.

No.	Butt Dia. in.	Tip Dia. in.	EI at Butt $ft^2 x 10^7$	Length ft.	Soil	Load for $\frac{1}{4}$" deflection Tons	Depth of Fixity ft.	Load for $\frac{1}{2}$" deflection Tons	Depth of Fixity ft.	Source
1	14	10	2.61	30	Medium Sand	3	6.48	6	6.48	A
2	13	10	1.94	32	Medium Sand	3	5.87	5	6.15	B
3	14	8	2.61	55	Nebraska Loess	10	4.33	14	4.89	C
4	12	8	1.41	28	3' Organic Silt over Fine Sand	1.3	6.97	2.2	7.37	C
5	14	10	2.61	32	3' Organic Silt over Fine Sand	2.2	7.18	-	-	C
6	13	8	1.94	60	25' Soft Peat on 30' Silt on Sand	0.5	10.65	1.0	10.65	C
7	13	8	1.94	60	28' Peat, 30' Silt on Firm Clay	1.4	7.56	1.9	8.60	C
8	16	10	4.46	40	Glacial Till	5	6.54	7.5	7.19	C
9	12	9	1.41	25	Stiff Clay	Maximum deflection at 2.5 tons was .046"			3.19	C

TABLE 2.1

LATERAL LOAD TESTS ON TIMBER PILES

Calculated Depths of Fixity and Loads to Produce Given Deflection

TABLE 2.2

LATERAL LOAD TESTS ON STEEL AND CONCRETE PILES
Loads to Produce a Given Deflection

No.	Type	Size	Length ft.	Soil	Approx. Load to give a Deflection of:		Source
					$\frac{1}{4}$"	$\frac{1}{2}$"	
1	Precast Concrete	18"butt 11" tip	30	Medium Sand	9.75	13	A
2	Precast Concrete	18"	35	Brown Clay Loam with Gravel	9	12	D
3	Raymond Step-taper	14.9" butt	34	Brown Clay Loam with Gravel	5.5	8	D
4	Union Monotube	7J8	35	Brown Clay Loam with Gravel	9	13	D
5	Union Monotube	7J8	38	Brown Clay Loam with Gravel	15	21	D
6	Steel	12H53	40	Brown Clay Loam with Gravel	5	7.2	D
7	Raymond Std.	-	14	2' Soft Brown Clay on Silty Sand	9	11.5	E
8	Raymond Std.	-	22	2' Soft Brown Clay on Silty Sand	7	10	E

TABLE 2.3

LATERAL LOAD TESTS OF PILE GROUPS

No.	Type	Size	Length ft.	Soil	Approx. Load/Pile to give a Deflection of:		Source
					¼"	½"	
1	4 Timber	12"butt 8" tip	30	Medium Sand	7	13	A
2	12 Timber	13"butt 9" tip	29	Medium Sand	6	9	A
3	8 Timber	13"butt 9" tip	32	Fine to Coarse Sand with Gravel	4.8	7.5	F
4	8 Timber	13"butt 9" tip	32	Fine to Coarse Sand with Gravel	5.8	-	F
5	2 Timber	16"butt 10" tip	36 & 39	Glacial Till	7.5	9.5	C
6	3 Timber	13"butt 8½" tip	47	9' Medium Clay on Silty Sand	5	7	E

Sources of Test Information:

A Feagin, L. B., "Lateral Pile Loading Tests," Transactions, ASCE, Vol. 102 (1937).

B Gleser, S. M., "Lateral Load Tests on Vertical Fixed-Head and Free-Head Piles," Symposium on Lateral Load Tests on Piles, ASTM Spec. Pub. 154 (1953).

C Wagner, A. A., "Lateral Load Tests on Piles for Design Information," Symposium on Lateral Load Tests on Piles, ASTM Spec. Pub. 154 (1953).

D Evans, L. T., "Bearing Piles Subjected to Horizontal Loads," ASTM Spec. Pub. 154 (1953).

E McNulty, J. F., "Thrust Loading on Piles," Journal, ASCE, Soil Mechanics & Foundations Div., Vol. 82, p. 940 (1956).

F Feagin, L. B., "Lateral Load Tests on Groups of Battered and Vertical Piles," ASTM Pub. No. 154, p. 12 (1953).

CHAPTER III

DOLPHIN TYPES, CHARACTERISTICS, AND DESIGNS

A. Tubular Steel Dolphins

In designing a berthing accommodation where a dolphin arrangement is indicated, the choice generally lies between a dolphin of the flexible type without special fender equipment, or a dolphin of the rigid type with high energy absorbing fenders. Special fendering systems, however, are usually complicated devices, making special securing provisions to the dolphins necessary, and requiring frequent inspection and maintenance. The flexible dolphin, on the other hand, is very simple in design, and derives its energy absorption capacity from the ability of its long slender structural elements to take a high degree of bending.

Flexible dolphins made of seamless or welded steel tubes have in recent years become very popular, especially in Germany and the Netherlands. Because of their increasing importance, they will be discussed at length, and several examples of their design and application will be given.

1. Classification and Analysis of Tubular Steel Dolphins

According to the kind of connection at the top of the piles, tubular dolphins can be grouped into three categories: free or pin-connected, torsion-resisting, and rigid or framed.

(a) Free or pin-connected tubes. This type referred to in Europe as a "bundle" dolphin is characterized by the fact that the horizontal bracing is connected to the individual tubes by means of loose or hinged joints. Such bracing allows the piles to deflect together and without jamming, and does not distribute loading to the piles through shear or bending of the bracing. Transmission of significant tensile and compression forces by the piles into the soil foundation is thus prevented. Hinged connections are more expensive than rigid connections, but where a site lacks consolidated soil strata with good bearing capacity, it may be necessary to use them rather than the fixed connections in order to avoid any differential settlement of the piles. Another advantage of hinged connections is that they give the dolphin a greater resilience which reduces the magnitude of the impact force -- and consequently the reaction on the hull of the vessel -- by half.

Impacts on dolphins (particularly in the case of large dolphins or those rectangular in plan) are generally such that there is considerable eccentricity. In the bundle type dolphin an eccentric impact results in large variations between the loads exerted on the different piles, with a consequent reduction in the efficiency of the dolphin as regards energy absorption. The variation in loading on the piles arises from the rotational effect of the eccentric

impact which, due to the hinged connections of the bracing, can only be resisted by additional bending of the piles. Some piles are therefore heavily loaded (where the deflections or bending caused by the equivalent couple and central load are in the same direction) while some may be subjected to much lighter loading. The following analysis will show how under an eccentric impact the amount of energy that a bundle dolphin is able to absorb can be as little as half of what the same dolphin can take up under centric impact. It should be noted that some rotational effect will also be produced by friction existing between the vessel and the dolphin. This may be significant compared to the rotational effect produced by the normal component of eccentric impact, for small design angles of approach. In the following analysis a maximum approach angle is assumed and therefore the frictional rotation will be negligible.

Figure 3.1 shows a diagrammatic view in plan of a dolphin with pin-jointed bracing. If the dolphin is subjected to a central impact force, i.e. with eccentricity $e = 0$, each pile will deflect the same amount Δ and will resist one-fourth of the total impact force P. The total energy absorbed is therefore $- E_A = 4 \times \frac{Q\Delta}{2}$. Since

$$Q = \frac{P}{4} \quad \text{and} \quad \Delta = \frac{Q L^3}{3EI},$$

the total energy may also be expressed as

(After H. Minnich; Ref. 45)

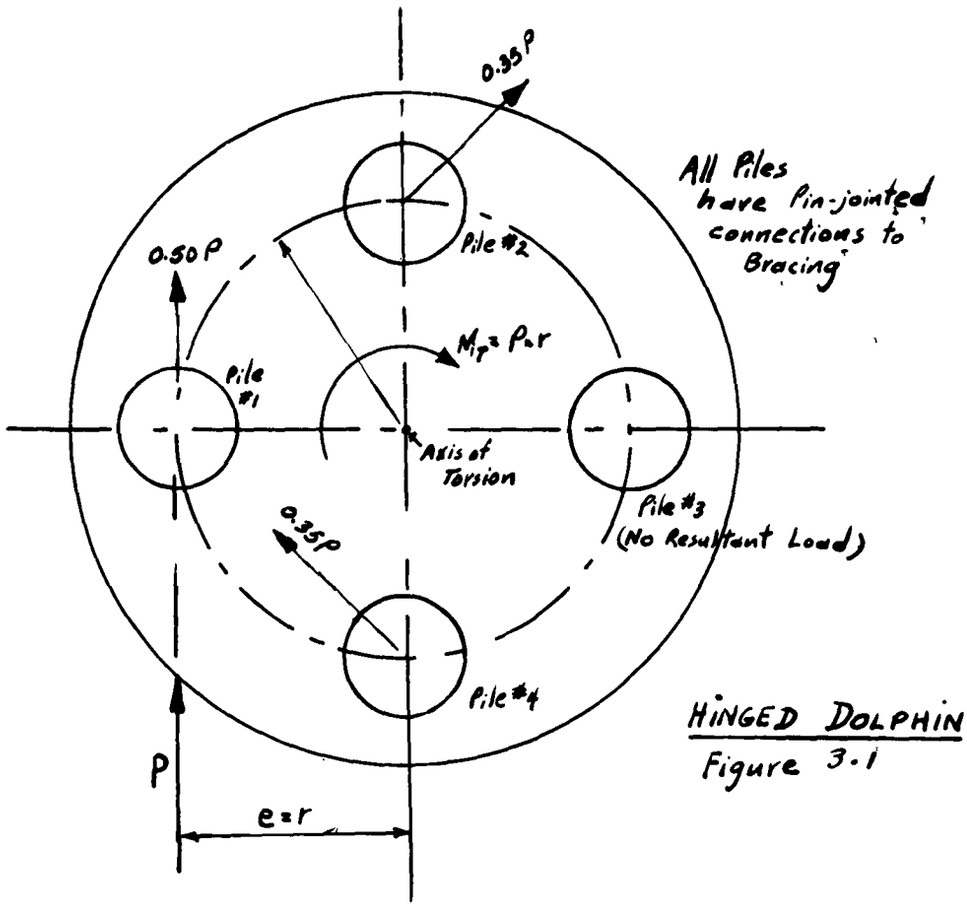

HINGED DOLPHIN

Figure 3.1

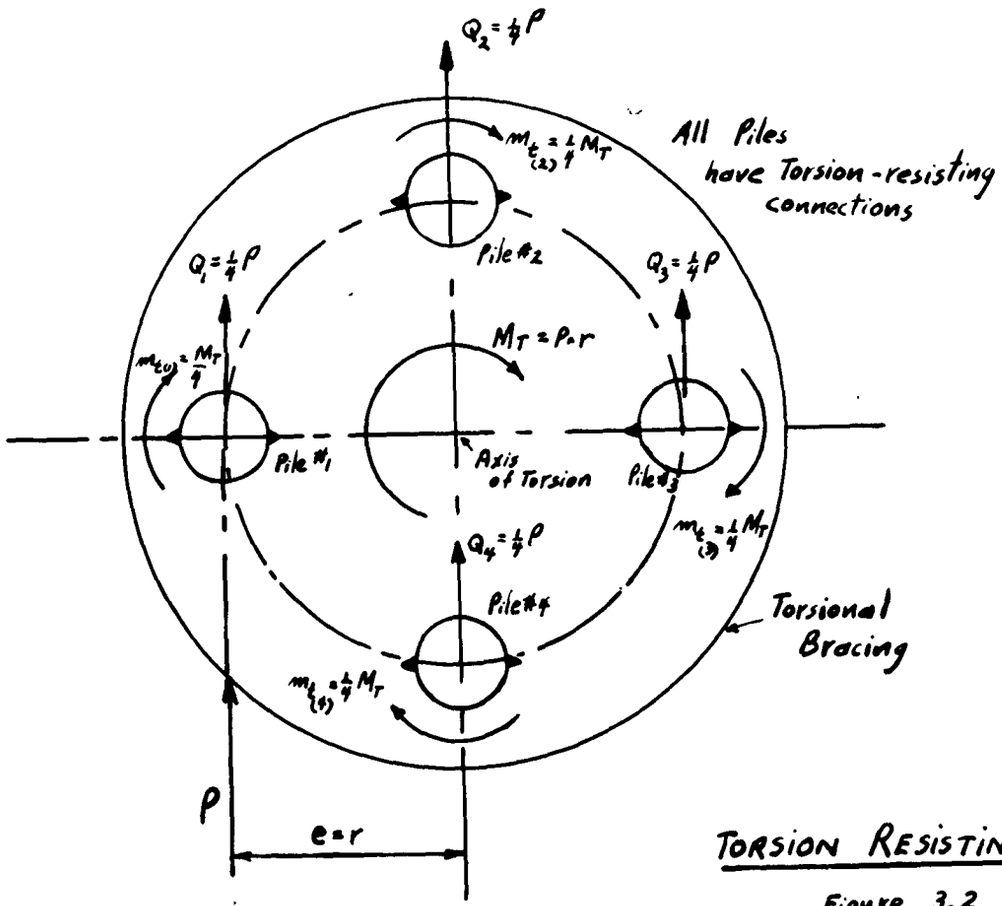

TORSION RESISTING DOLPHIN

Figure 3.2

$$- E_A = \frac{P^2L^3}{24EI} .$$

Further recognizing that the maximum force that each pile can resist is

$$P = \frac{8\ s_a I}{L\ d}$$

where s_a = allowable bending stress and d = the diameter of the pile, the total energy absorption under central impact may be expressed finally as

$$E_A = \frac{8(s_a)^2 IL}{3\ d^2\ E} = 2.665\ \frac{(s_a)^2 IL}{d^2\ E}$$

Now if the external force P is due to an eccentric impact with e = r , an external torsional moment M_T is produced which is equal to P x r. According to statics, then, the most heavily loaded pile (No. 1) will be subjected to a load equal to 0.50 P, and the least heavily loaded pile (No. 3) will be subjected to zero force. The loads in piles Nos. 2 and 4 will each be 0.35 P. The individual piles are thus subjected to resultant loads differing in magnitude and direction. This unsatisfactory utilization of the strength properties of the piles cannot be avoided by choosing different cross-sections for the piles, as the distribution of the external force among the piles will vary according to direction of impact. Although the resultant loads on the piles will differ, each pile will absorb the same amount of energy. This may be visualized by

considering that the eccentric impact is equivalent, as previously mentioned, to a central force P which causes a deflection Δ_P of the dolphin along the direction of the central load, plus a couple $P \times r$ which causes additional deflection Δ_C of the dolphin due to the rotational effect of the couple. Since the rotation is relatively small, the deflection of the piles due to the action of the couple may be considered to occur in a tangential direction according to $\Delta_C = r\,\theta$ where θ is the rotation in radians. The total energy absorption may therefore be expressed as

$$- E_A = 4\,\frac{P\,\Delta_P}{4 \cdot 2} + \frac{P\,r\,\theta}{4 \cdot 2}$$

which reduces to

$$E_A = \frac{L^3 P^2}{12EI} \quad .$$

Since the load P that can be resisted by the dolphin depends upon the resultant force exerted by the most heavily loaded pile (which is No. 1), the total energy absorption may be expressed finally as

$$E_A = \frac{4(s_a)^2 IL}{3\,d^2\,E} = 1.333\,\frac{(s_a)^2 IL}{d^2\,E}$$

Hence it is seen that under eccentric impact a pin-connected dolphin cannot absorb as much energy as it can when subjected to a central impact. For the case analyzed, i.e. with $e = r$, the energy absorption capacity of the dolphin is only one-half as great.

(b) Torsion-resisting dolphin. To overcome the deficiency inherent in a bundle dolphin when subjected to an eccentric impact, one or more of the pin joints can also be made resistant to torsion in the horizontal plane of the bracing. In this manner the loading on the piles will be more evenly distributed since the external torsion moment will be resisted primarily by the twisting of the pile cross-sections (which does not occur with hinged bracing) rather than by additional "rotational" bending of the dolphin piles. To illustrate this, reference is made to Figure 3.2 which shows a dolphin similar to the one of Figure 3.1 but with the addition of torsion-resisting connections.

Under central impact the analysis of this pin-connected, but torsion-resisting, dolphin is exactly the same as for the hinged dolphin.

Under the action of an external moment of torsion M_T due to an eccentric blow, the bracing rotates through an angle θ. Because of the torsion-resisting connections, however, relative rotation of the piles with respect to the bracing is not possible and so the cross-sections of the piles at the level of the bracing will rotate along with the bracing. The tops of the piles will therefore undergo a twisting rotation θ relative to the portions fixed firmly in the ground. Not only will there

be set up in each pile a force T resulting from the "rotational" deflection ($\Delta_C = r\,\theta$) of the dolphin, but also an internal torsional moment M_C due to the twisting of each pile cross-section. The force T will usually be very small, so that essentially all piles will be loaded equally as follows:

$$Q \approx \frac{1}{4} P$$

$$m_t \approx \frac{1}{4} M_T$$

The more exact expressions for the applicable forces acting on the piles of the dolphin shown in Figure 3.2 are as follows:

$$Q = \frac{1}{4} \cdot P$$

$$T = \frac{15\ m_t\ r}{4\ L^2}$$

$$m_t = \frac{Pr}{4}\left[\frac{1}{\frac{15r^2}{4\ L^2} + 1}\right]$$

The total energy absorbed by the dolphin is

$$E_A = 4\left[\frac{Q\Delta_P}{2}\right] + 4\left[\frac{m_t\theta}{2}\right] + 4\left[\frac{T\Delta_C}{2}\right]$$

where

$\Delta_P = \frac{P\ L^3}{12EI}$, $\theta = \frac{5\ m_t L}{4\ EI}$ (assuming that Poisson's ratio is $\frac{1}{4}$), and $\Delta_C = \frac{T\ L^3}{3\ EI}$.

For purposes of comparison of the torsion-resisting dolphin with the pin-connected dolphin previously analyzed, the following table has been prepared for three values of $\frac{r}{L}$ ratio.

$\frac{r}{L}$	Q	T	m_t	E_A
.1	$\frac{P}{4}$	0.009 P	$\frac{Pr}{4}$ (0.96)	$2.57 \frac{(s_a)^2 IL}{d^2 E}$
.2	$\frac{P}{4}$	0.032 P	$\frac{Pr}{4}$ (0.87)	$2.32 \frac{(s_a)^2 IL}{d^2 E}$
.3	$\frac{P}{4}$	0.063 P	$\frac{Pr}{4}$ (0.75)	$2.02 \frac{(s_a)^2 IL}{d^2 E}$

It is readily seen that the energy absorption capacity of a pin-connected dolphin can be increased considerably by the addition of torsion-resisting connections. For the ratios of $\frac{r}{L}$ considered, the energy absorption capacity can be increased respectively to 1.93, 1.74, and 1.52 times the energy absorption of the pin-connected dolphin.

It should further be noted that the shear stress s_s produced in each pile by the torsional moment m_t will be very small for a circular steel cross-section. When it is combined with the flexural normal stress, s_N caused by the

Q and (very small) T loads, the resultant principal stress s_R remains nearly the same, as is apparent from the stress relationship

$$s_R = \sqrt{(s_N)^2 + 3(s_s)^2} \quad *$$

This means that the allowable stress s_a can be used without reduction since for very small s_s, the allowable stress equals $s_N = s_R$. All of the strength properties of the piles are thus fully utilized and the dolphin will be almost as efficient under eccentric as under central impact. The foundation soil will also be more uniformly loaded due to the equal loading of the piles.

If all of the piles of a bundle dolphin have torsion-resisting connections, it is obvious that maximum efficiency will be obtained. Constructional considerations, however, may play a part in determining the number of piles of a dolphin to be so connected. Thus, in the first torsion-resisting bundle type dolphins, which were installed at the port of Lubeck in 1951, not all of the piles were provided with torsion-resisting connections. Willy Minnich of Germany, who was the first to bring the torsion-resisting principle to the attention of dolphin designers, derived general equations for dolphins with piles of

---

*Derived from distortion-energy failure theory (Ref. 40).

circular cross-section, having both hinged and torsion-resisting connections. These equations which are given below relate to Figure 3.3 and are based on the following assumptions:

(1) The external moment of torsion M_T acts in the plane of the torsional bracing.

(2) The angle of rotation θ is so small that the shear forces T act in the planes of the deflections .

(3) The equivalent length L_o of the pile* is the same for bending and for torsional rotation.

(4) The equivalent length L_o is the same for all the piles of the dolphin.

Let v = the total number of piles of a dolphin.

w = the number of piles with torsion-resisting connections.

I = the moment of inertia about a diameter.

Then the condition for equilibrium about the axis of torsion will be:

$$M_T = \sum^{w} m_t + \sum^{v} T \cdot r$$

---

*$L_o = L + 0.78\ t_o$ according to Muller, "HANSA," 1953, p. 1988. Penetration "t_o" as given by Blum, "Die Bautechnik," 1932, No. 5 (Ref. 9).

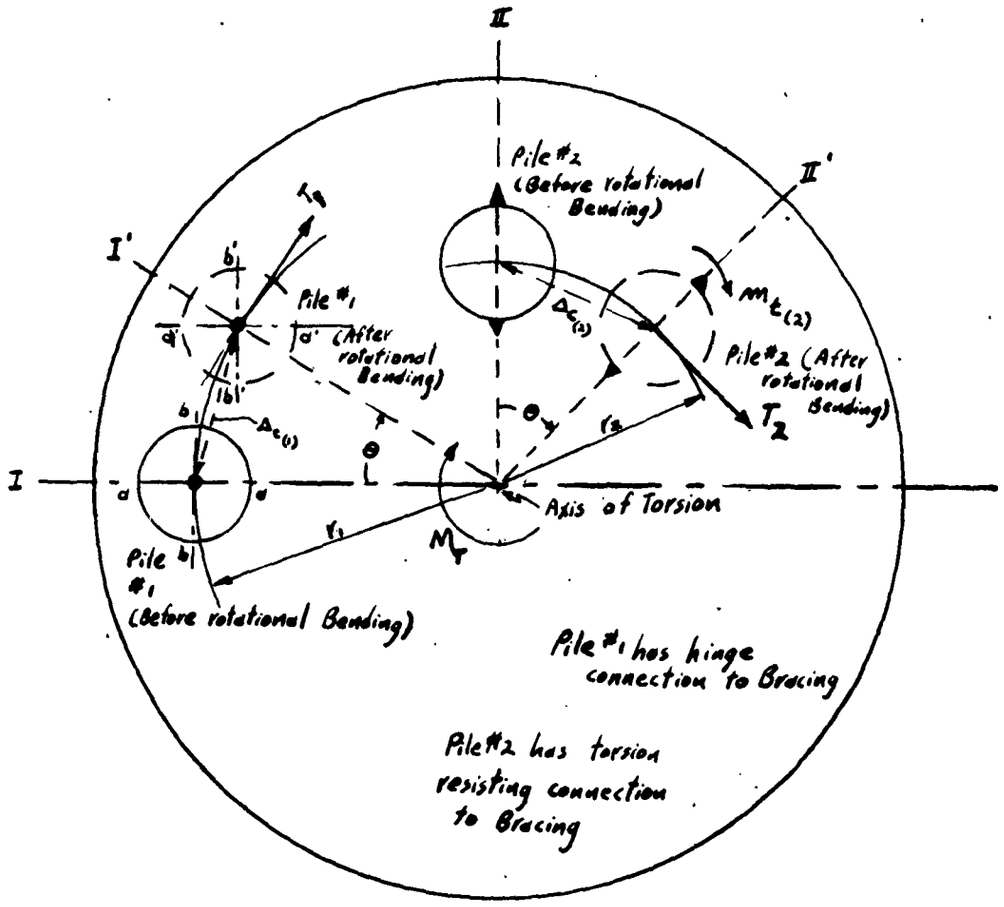

DOLPHIN WITH BOTH
HINGED AND TORSION-RESISTING CONNECTIONS
(After H. Minnich ; Ref. 45)

Figure 3.3

The relationships between the external torsional moment and the resulting internal forces and moments are derived from basic principles as follows:

For a circular shaft of effective length L_o twisted through an angle θ by an applied moment m_t

$$\theta = \frac{m_t L_o}{RJ}$$ where R = modulus of rigidity and J = polar moment of inertia which also equals $2 \cdot I$

$$R = \frac{E}{2(1 + \nu)} = \frac{2}{5} E$$ since Poisson's ratio $\nu = \frac{1}{4}$ for steel.

Hence $\theta = \frac{5\ m_t L_o}{4\ EI}$ or $m_t = \frac{4\ EI}{5\ L_o}\theta$

The sum of all such moments $\sum m_t = \frac{4\ E\theta}{5\ L_o} \cdot \sum I$ as E, θ, and L_o will be constant for all piles.

Assuming that all piles, whether pin-jointed or jointed by a torsion-resisting connection to the torsional bracing, deflect as free-ended cantilevers of length L_o under an applied force T, the deflection

$$\Delta_C = \frac{T\ L_o^3}{3\ EI}$$

From Figure 3.3 it is seen that the applied force T causes a moment $m_f = T \cdot r$ about the axis of torsion, and $\Delta_C = r \cdot \theta$ (for small values of θ).

Hence $\quad r\theta = \dfrac{m_f L_o^3}{3\ EIr} \quad$ or $\quad m_f = \dfrac{3\ EI\ \theta\ r^2}{L_o^3}$

The sum of all such moments $\sum m_f = \dfrac{3E\theta}{L_o^3} \sum I\ r^2$ as E, θ, and L_o will be constant.

Now the total external moment M_T is equal to the sum of the internal moments. That is,

$$M_T = \frac{4E\theta}{5L_o} \sum^{W} I + 3\ \frac{E\ \theta}{L_o^3} \sum^{V} I\ r^2$$

As M_T will be known, it is desirable to express m_t and T in terms of M_T.

$$\frac{m_t}{M_T} \quad \frac{\dfrac{4\ EI\ \theta}{5\ L_o}}{\dfrac{4E\theta}{5L_o} \sum^{W} I + \dfrac{3E\theta}{L_o^3} \sum^{V} I\ r^2}$$

Therefore

$$m_t = \frac{I\ L_o^2}{L_o^2 \sum^{W} I + 3.75 \sum^{V} I\ r^2} \cdot M_T$$

$$T = \frac{m_f}{r} = \frac{3\ EI\ \theta\ r^2}{L_o^3\ r} = \frac{3\ EI\ \theta\ r}{L_o^3}$$

and $$\frac{T}{m_t} = \frac{\dfrac{3\ EI\ \theta\ r}{L_o^3}}{\dfrac{4\ EI\ \theta}{5\ L_o}}$$

Therefore,

$$T = \frac{3.75\ r}{L_o^2} \cdot m_t$$

The only deficiency which can be found regarding Minnich's equations is in his mathematical definition of the axis of torsion. He presents the following equations for the location of the torsional axis

$$X_o = \frac{\sum^{v} (I \cdot X)}{\sum^{v} I}$$

$$Y_o = \frac{\sum^{v} (I \cdot Y)}{\sum^{v} I}$$

For a symmetrical pile group these equations reduce to those for the center of gravity of the group. However, for non-symmetrical piles the deviation between the center of gravity and the torsion axis (as defined by Minnich) is significant. In mechanics, the axis of torsion is said to coincide with the axis through the center of gravity, whether the group is symmetrical or non-symmetrical. Accordingly, use of Minnich's equations for locating the axis of torsion of a pile group is not recommended, as it should coincide with the center of gravity in all cases.

Notwithstanding, full-scale tests conducted in 1952 by the German administration of hydraulic works and navigation on both pin-connected and torsion-resisting dolphins made of hollow steel piles confirmed mathematical calculations concerning the energy absorption superiority of the torsion-resisting dolphin. A summary of these full-scale tests is given in Appendix A.

(c) Framed Dolphins. These dolphins have their bracings welded to the tubes or piles and can be designated as rigidly connected. Staged frames with several statically indeterminate members result therefrom. As indicated in Chapter I, framed dolphins have a considerably greater force absorption capacity when compared with hinged or torsion-resisting dolphins but have a smaller capability for deflection. This type of construction is advantageous in case of great depth of water where the most important requirement is an increased ability to absorb force. Good soil conditions are essential, however, for proper functioning of frame dolphins. Figure 3.4 illustrates a framed dolphin used for mooring in the harbor of Hamburg, Germany. Analysis of framed or rigid dolphins follows the methods for ordinary indeterminate frames as can be noted from the comparative dolphin studies made in Chapter I.

2. Example of Tubular Steel, Hinged Dolphins

An installation of flexible steel dolphins of the hinged type was constructed in 1957 by the Aluminum Company of Canada in Kitimat Harbor, British Columbia (Ref. 8). The berthing facility, shown in Figure 3.6, consisted of two main dolphins or "strength dolphins" and two "end dolphins." The main dolphins were designed to resist impact forces resulting from the berthing of a ship and afterwards to resist the pull of the ship's spring and breast lines.

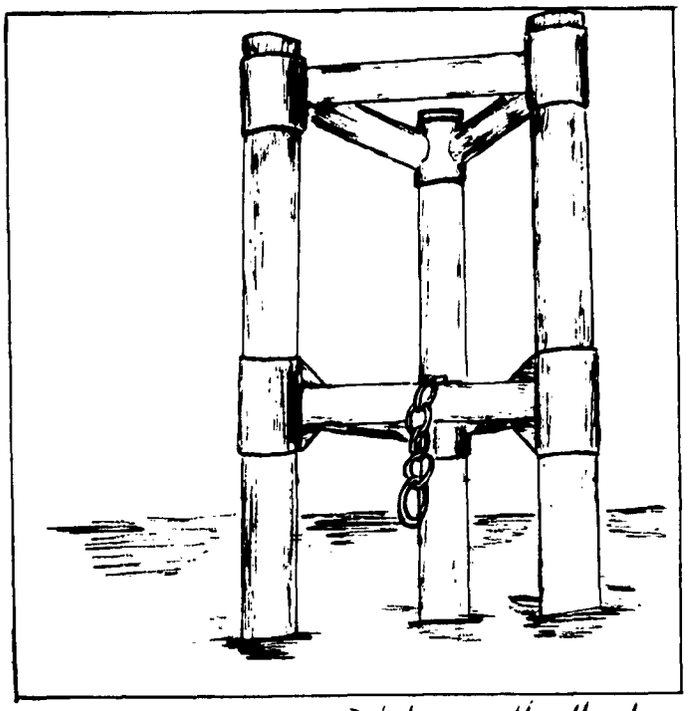

Figure 3.4

Mooring Dolphin in the Hamburg Harbor (Frame Dolphin)

2 tubes $20\frac{1}{2}''\phi \times 0.630'' \times 71'$
1 tube $20\frac{1}{2}''\phi \times 0.630'' \times 78'$

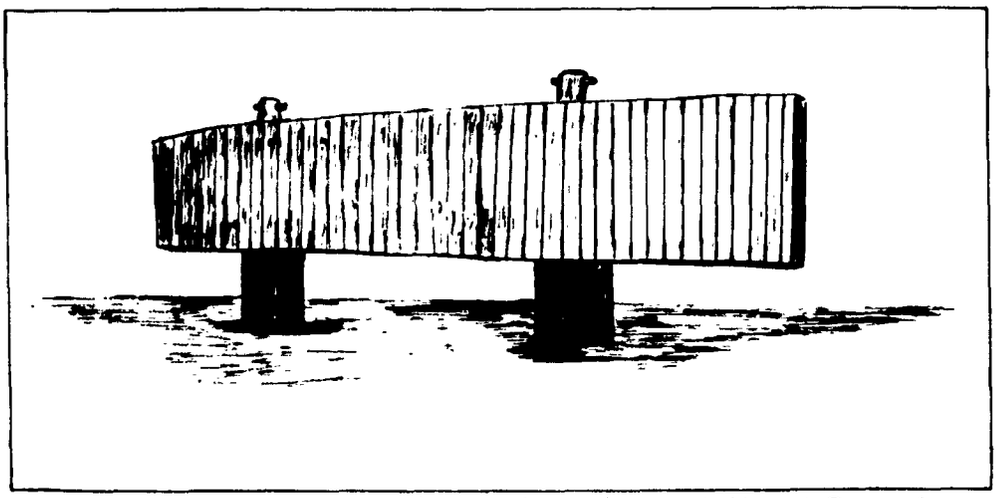

Figure 3.5

Flexible Steel Dolphin of the N.D.S.M at Amsterdam

The two "end dolphins" were designed to hold the bow and stern mooring lines after the berthing of a ship and to provide some additional resistance along the line of dolphins.

(a) Design of Dolphins. As the basis for the design the following data were used:

Load displacement of ship, representing the moving mass of a 16,000 Dead Weight Tons Cargo Vessel - 24,000 Short Tons.

Maximum angle between the ship's line of approach and the line of dolphins - 15°.

Maximum approach speed of vessel, normal to the dolphins - 0.5 ft. per sec.

Pressure on ship from maximum 80 mph winds - 20 pounds per $ft.^2$

Two cases of berthing were considered:

(i) Broadside collision of the vessel with the main dolphins, engaging both structures simultaneously. In this case the energy to be absorbed was considered equally distributed to both structures. However, it was assumed that from the total kinetic energy of the berthing ship only 50% would be absorbed by the two main dolphins, while the rest of the energy would be lost due to water displacement in a broadside movement towards the dolphins, and due to the loss of energy on first impact.

(ii) Collision with only one of the main dolphins. Because this type of impact is unlikely to occur amidships, a reduction coefficient of 0.5 was used for the moving mass.

Hence in either case, the energy to be absorbed by one main dolphin was the same. In case (i) the dolphin absorbs the energy in pure bending while in case (ii) the structure may also be subjected to torsion, caused by a glancing blow.

As shown in Figure 3.6, the dolphins were constructed of long, vertical, tubular steel piles of 3/4" and 1/2" thickness and 30" outside diameter. Seven piles were used for each main dolphin and three piles were used for each of the end dolphins. Two horizontal steel platforms for each dolphin were introduced to provide the tie between the piles. As the platforms are supported loosely on brackets welded onto the piles, all connections were considered as hinges. Consequently, the lateral loads do not cause appreciable axial loads.

Comparative design studies revealed that high tensile, low alloy steel piles could be utilized better than medium structural grade steel pipes to resist the cantilever moments for this particular structure. Welded steel pipes, complying with ASTM Spec. A-252, Grade 3, having an ultimate strength of 75,000 psi and a yield

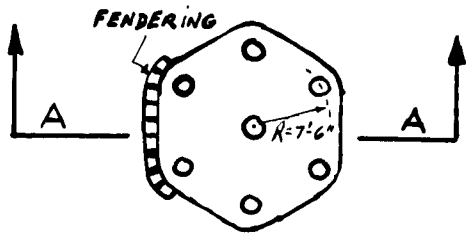

PLAN

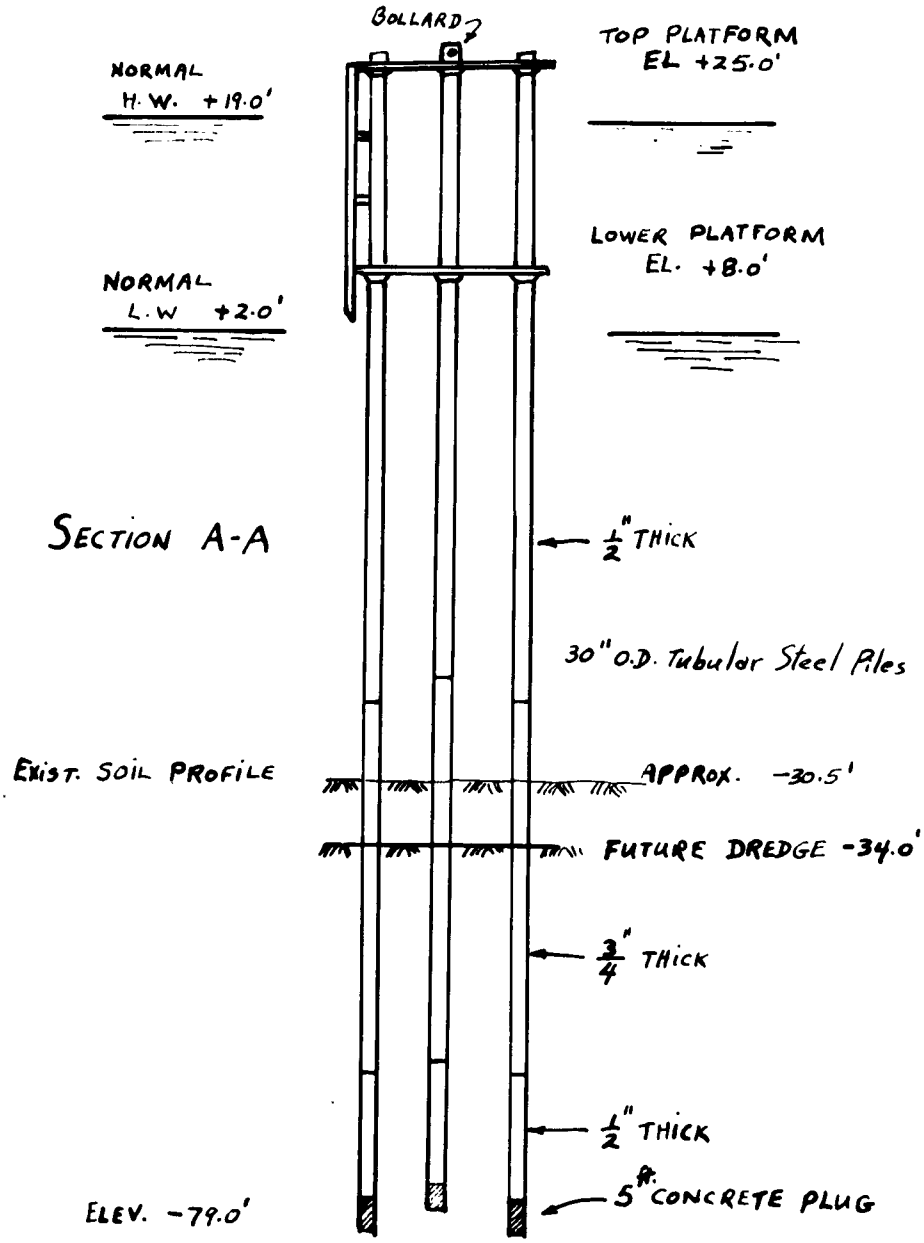

MAIN DOLPHIN

Figure 3.6

strength of 45,000 psi, were selected. The use of this steel offered considerable saving in pile transport, handling, field welding, and driving costs as compared with medium structural grade steel piles. Based on the nature of the design loads, it was decided to use a maximum flexural working stress of 37,500 psi which means a theoretical safety factor of 1.2 against yield failure and a factor of safety of 2.0 considering the ultimate strength.

The structure is so flexible, that under the maximum forces the slope of the timber fendering exceeds the probable tilt of the ship. For this reason it was assumed that the point of load application for wind thrust and impact forces would shift to the elevation of the lower platform.

Except for loading case (ii), the loads were assumed uniformly distributed to all dolphin piles.

The penetration depth of the piles was determined according to the methods used for cantilevered sheet piling. The soil between the piles was included in the effective width which appeared to be a justified assumption considering the 7'-6" center-to-center spacing of the 2½' diameter piles.

For calculation of the soil resistance the following soil properties were used:

Submerged weight of soil = 65 pcf

Angle of internal friction, $\phi = 30^{\circ}$

Cohesion, C = 0

Factor to allow for wall friction in Rankine's value of coefficient of passive earth resistance, m = 1.33

In order to have a consistent overall factor of safety, the penetration depth was designed for a theoretical lateral force on structure, required to produce simultaneous yield of steel and ultimate soil resistance.

(b) Calculations for Main Dolphins. A summary of calculations for the main dolphin are shown in Figure 3.7 based on the following:

Soil pressure increment per 1-ft. of depth - $mp_a - p_a = 238$ psf

Effective width, B = 17.5 ft.

Required moment resistance of soil for 1-ft. width, based on yield strength of piles - $M_r = 736{,}000$ ft-lb.

Maximum bending moment for piles is at depth

$$X_o = \sqrt{\frac{2\,H}{(mp_p - p_a)}} \qquad \text{(see Ref. 2)}$$

and, maximum $M = M_r = H\left(42 + \frac{H}{119}\right) - \frac{238}{6}\left(\frac{H}{119}\right)^3 = 736{,}000$ ft-lb.

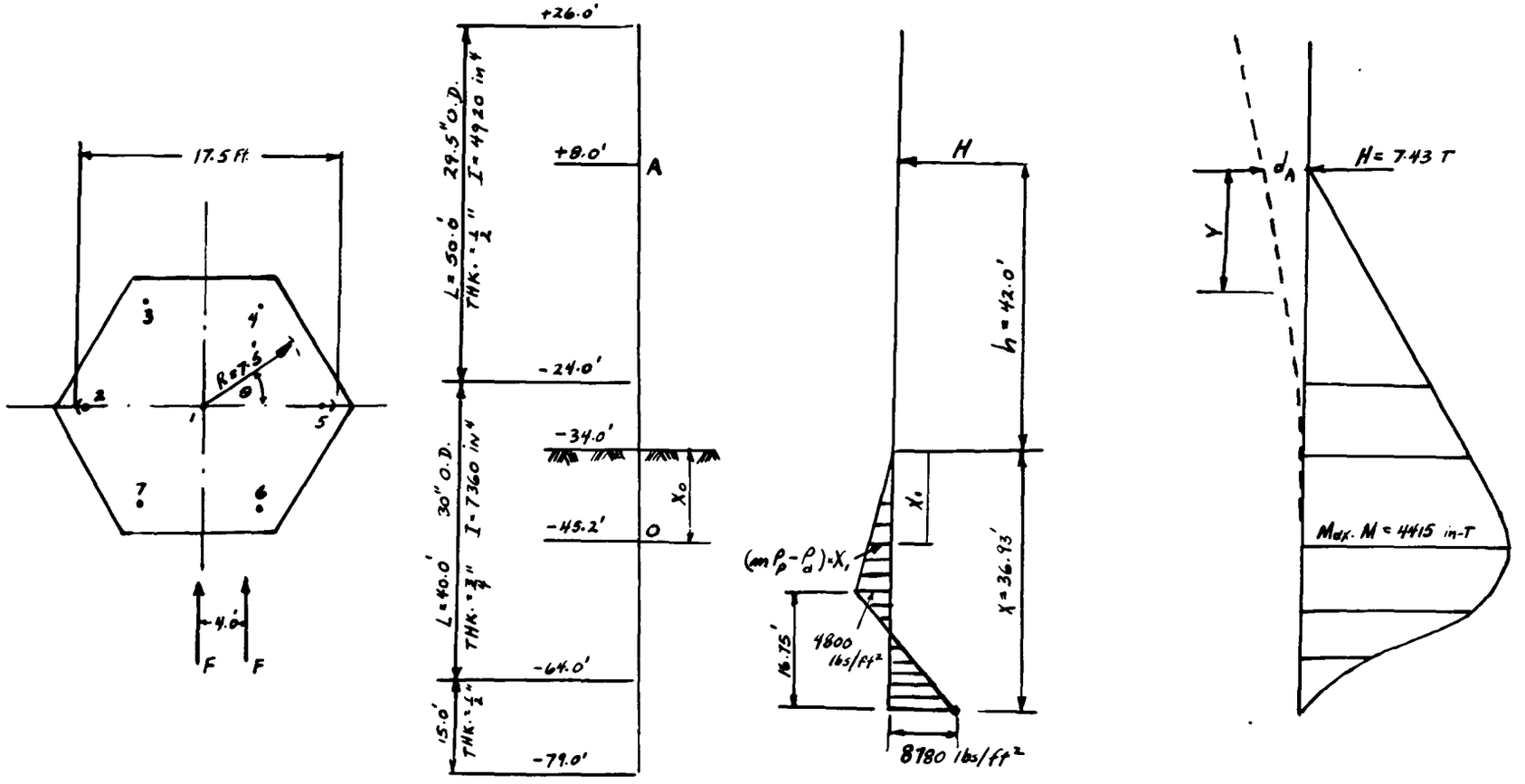

PILE DATA

SOIL PRESSURE DIAGRAM

MOMENT DIAGRAM OF PILES

FOR 1 FT. WIDTH OF STRUCTURE

MAIN DOLPHIN DESIGN DATA

(After S.A. Bernup ; Ref. 8)

Figure 3.7

from which,

$$H = 14{,}860 \text{ lb.} = 7.43 \text{ T per unit width}$$

and

$$X_o = 11.2 \text{ ft.}$$

Corresponding total lateral force on the dolphin -- $P = 7.43 \cdot 17.5 = 130$ T.

From equation

$$X^4 - \left[\frac{8\,H}{(mp_p - p_a)}\right]X^2 - \left[\frac{12\,H\,h}{(mp_p - p_a)}\right]X - \left[\frac{2\,H}{mp_p - p_a}\right]^2 = 0$$

(see Ref. 2)

the necessary penetration is

$$X = 36.93'$$

Actually the specified penetration depth was made 8 ft. greater than the theoretically calculated 37 ft. to provide some allowance for uncertainties in soil conditions.

The greatest lateral force was found to be a wind thrust of 90 T per dolphin. The corresponding maximum bending mo nt per pile is then

$$M = \frac{4415 \cdot 17.5}{7} \cdot \frac{90}{130} = 7640 \text{ in-T.}$$

which gives a maximum stress of 31,200 psi in each pile.

The deflection of the dolphin under a lateral load of 90 T at El. + 8.00 ft. is

$$d_A = \int_0^A \frac{M_y Y dy}{EI_y} = 11.3 \text{ in.}$$

The deflection for a load of 1-Ton per pile is calculated as 0.88 inches. This deflection was used as a basis for calculating energy absorption as follows:

Energy absorption by structure in bending only -- $E_B = 0.5 \frac{0.88}{7} F^2 = 0.0629 F^2$ in-T.

Energy absorbed by dolphin in torsion -- $E_T = 0.5 M_T \theta$

Assuming force F acting on dolphin with eccentricity -- $M_T = 48$ F in-T.

Then,

$$M_T = 6 \cdot \frac{(7.5 \cdot 12)}{0.88} \cdot \theta \cdot (7.5 \cdot 12) = 55{,}300 (\theta) \text{ in-T.}$$

and since $48 F = 55{,}300 (\theta)$

$$\theta = 0.00087 F \text{ radians}$$

Also,

$$E_T = 0.5 \cdot 48 F \cdot 0.00087 F = 0.0209 F^2 \text{ in-T.}$$

Therefore the total energy absorption for each main dolphin is

$$E_A = E_B + E_T = (0.0629 + 0.0209)F^2 = 0.0838 F^2 \text{ in-T.}$$

The energy from ship's impact

$$E_A = 0.5 \cdot 0.5 \frac{Wv^2}{2g} = 23.4 \text{ ft-T} = 282 \text{ in-T}$$

say 300 in-T.

The impact force on the structure is therefore

$$F = \frac{300}{0.0838} = 59.9 \text{ T}$$

The maximum displacement of a pile at elevation + 8.0 ft.:

$$d = \frac{0.88 \cdot 59.9}{7} + 0.00087 \cdot 59.9 \cdot 90 = 12.22 \text{ in.}$$

From which the maximum force on a pile due to eccentric impact is:

$$F = \frac{12.22}{0.88} = 13.9 \text{ T}$$

which results in a maximum stress of 36,200 psi in the most heavily loaded pile.

It is seen that the eccentric impact from berthing produces the highest stresses, and consequently is the critical condition.

It should be noted also that the deflections were defined assuming that the effective point of fixation coincides with the point of maximum moment.

(c) Calculations for End Dolphins. For the design of end dolphins, a static pull governed by the breaking strength of 8-in. ropes was considered. According to marine experts a vessel may have up to three 8-in. manila ropes tied on a bollard of the dolphin. The breaking strength of one rope is 21 tons. Since it was considered

unlikely that all ropes would be stressed to the same extent and near their breaking strength, a line pull of 30 T was used. This causes a stress of 36,000 psi in each pile assuming that the pull is applied at El. + 26.0 ft. The maximum deflecting under this load is 20 inches.

(d) Construction of Dolphins. The platforms were designed as diaphragms, each made up of a single 3/8" thick checkered steel plate with stiffeners. A tolerance of $\pm$ 6 inches was allowed for locating each individual pile in plan. Creosoted fir timber fendering was used in front of the dolphins as shown in Figure 3.6. To lessen the effect of glancing blows on the structure, the fendering was curved towards the sides of the dolphins. Each dolphin was also equipped with steel ladders and handrailing.

In construction of the dolphins the main problem was the driving of the large diameter piles. Jetting was not considered desirable because of possible soil disturbance. In order to avoid reinforcing the pile head, the driving was carried out with an 8,000 lb. hammer dropping inside the pile cylinder and delivering the blows to a 5 ft. long concrete plug poured at the bottom of the pile. A thick layer (about 16 ft.) of sand and crushed stone was placed above the concrete plug so that much of the force of the blow was absorbed in compaction and elastic compression of this material. More packing was added

from time to time during the driving as soon as it was noticed by sound that the packing had been pulverized to the point where it no longer acted as a cushion. The ultimate resistance of each pile was estimated at about 300 tons. Inspection inside the piles after driving did not reveal any sign of damage. Prior to driving, all field welding for the piles was carefully inspected and a number of radiograph films were made to check the quality of the welding.

The average time for locating and driving of a pile was one day. Most of the driving was accomplished in 4 hours per pile. Templates were made to fit the as-driven pile locations. The platforms were then assembled on the shore from prefabricated elements using these templates.

The timber fendering units were prefabricated on the shore and later fastened on brackets of the dolphin steel work. The platforms and all external surfaces of the piles were painted with a coal tar paint applied in two coats. In addition, a sacrificial magnesium anode system was installe .

Although the work on water was very much affected by the tide conditions (tidal range was over 20 ft.), the field work for all four dolphins, including pile preparation, required only 3 months' time.

(e) Experience Data. The dolphins have been in operation for almost 3 years and have proven to be satisfactory. Vessels have berthed in all types of weather conditions and there is no evidence of any permanent pile deflection nor any change in alignment of the piles. Because of the flexibility of the structures, large impacts have been absorbed without any damage to the piles. On the other hand, the dolphins have sufficient rigidity that vessels of 18,000 tons mooring to them do not show any sign of surging on the ebb tide, which runs at a maximum velocity of 3 knots.

The following account* of an unusual mooring situation in connection with one of these dolphins is included for interest:

> "... the Sungate, a 14,000 ton vessel, struck the third dolphin south from Terminal Wharf No. 1 with her bow in making a difficult landing at night in a strong wind and snow storm. The vessel had practically no way on when contact was made but the sheer weight of the vessel was taken by the upper platform of the dolphin. The ½" x 8" steel sill which supports the deck plate was pushed in by the bow for a distance of 24" and then apparently sheared. The bow then proceeded

---

*Reported by Harbor Master, Kitimat Harbor

through the deck plate for a further 18" and came to rest against the side of the main piling; no damage was done to the lower deck plate and no damage was done to the piles in the structures.

"When the Captain of the vessel was questioned, he stated that due to the darkness and the storm he could not estimate the amount of movement in the structure when under pressure by the vessel. Subsequent visual examination failed to show any change in the structure when under pressure by the vessel."

The only problem reported is in the coal tar paint which failed in the splash zone within a few months after the completion of the structures. This failure has been attributed to inadequate cleaning of steel surfaces prior to paint application and a rather poor painting practice. Because of the lack of protective painting, the protective sacrificial magnesium anode system lasted only two years in lead of the planned five-year period.

(f) Alternate Designs Considered. Other dolphin designs that had been considered in lieu of tubular steel were as follows:

(i) Pressure creosoted timber piles. It was decided that this scheme was not very feasible because

of the great number of batter piles required to resist the impact and wind loads. Also a concrete capping would have been required to engage the resistance of all dolphin piles and it was felt that such concrete work would be very difficult because of the tide conditions.

(ii) Steel sheet pile cells 27 ft. in diameter penetrating the soil for some 40 ft. and gravel filled above the bed elevation. This system offered reasonable factors of safety but the costs involved were considered high compared to other choices.

3. Example of Torsion-Resisting Dolphins

Torsion-resisting dolphins were designed and built in 1954 for the oil storage firm "Amatex" in Amsterdam (Ref. 63). Spaced at distances of 230 ft. and 66 ft. as shown in Figure 3.8, a group of two large and two small dolphins were designed for berthing large, medium, and small tankers. A number of mooring bollards were also placed on shore.

The landing stage for this berthing facility is a floating steel pontoon which is connected to shore by a 30 ft. long jetty. Such a simple solution was possible because Amsterdam is not a tidal harbor and consequently the fluctuations of water level are not significant. Since it is regular practice in the Port of Amsterdam to employ

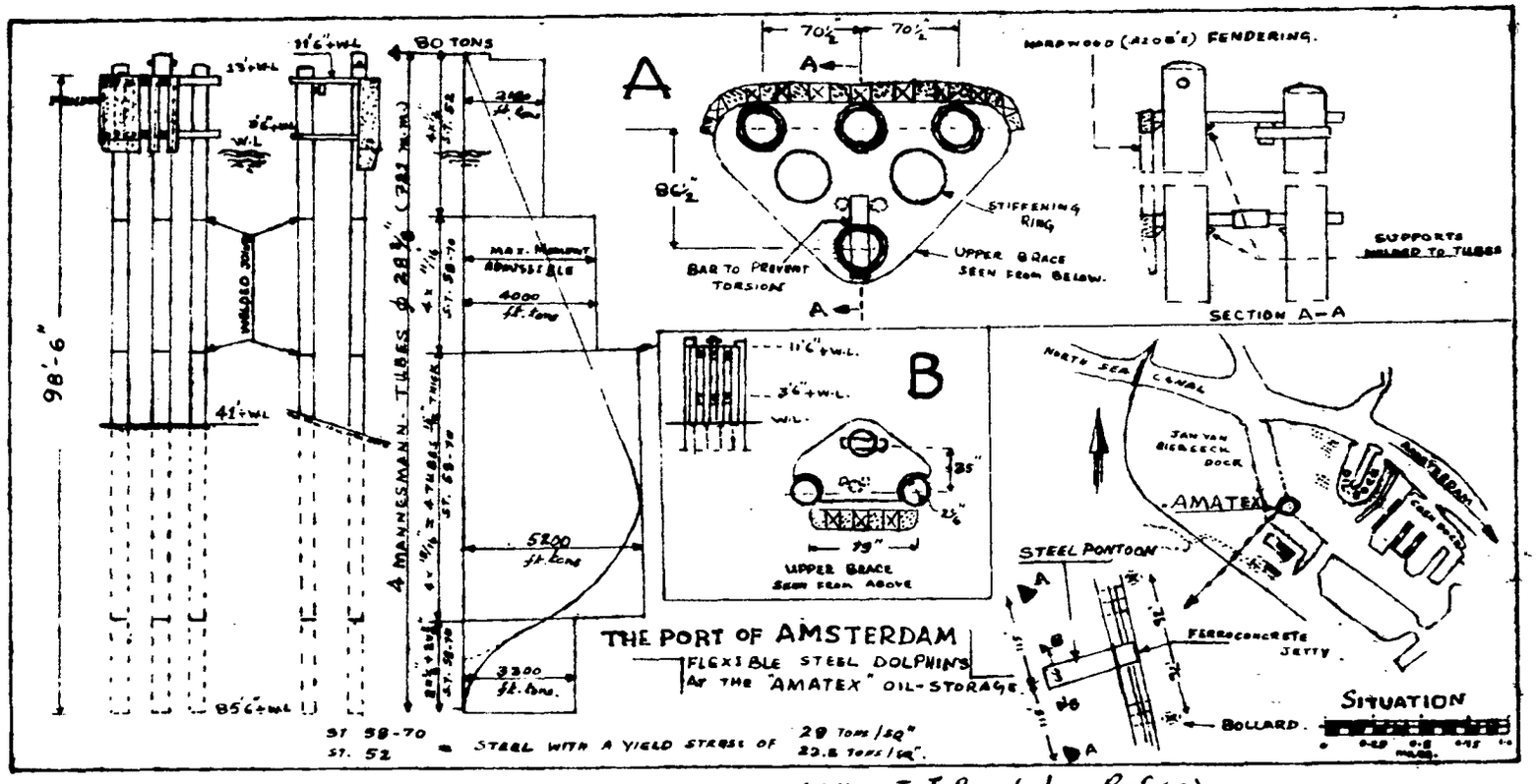

(After T. J. Risselada; Ref. 63)

Figure 3.8

special crews equipped with launches for the securing of the ropes and hawsers, it was sufficient to fit the dolphins with ladders without connecting them to the steel pontoon landing stage.

(a) Design of Dolphins. In Holland, heavy, 98 ft. long tubular piles had never yet been driven. Therefore, it was considered undesirable to run any risks with regard to driving; the more so, as water jetting could not be allowed with the type of soil existing at the site. Taking the size and weight of pile driving hammer available into account, it was determined that the maximum diameter of the tubes should be about 2'-3". The design decided upon consisted of 4 tubes with a diameter of 2'-4" for the large dolphins, and of 3 tubes of 1'-9" for the small dolphins.

Hollow diaphragm braces are provided consisting of steel plates and resting loosely upon brackets welded to the tubes. The loose fit answers effective hinged connections between braces and tubes but in addition, as is illustrated by detail A of Figure 3.8, the back pile has a torsion-resisting connection to obtain a more uniform distribution of the dynamic and static forces over the piles. To prevent vessels striking the dolphins below the lower bracing, the timber fendering protrudes 1'-8" and extends below the water line.

The basic design data were as follows:

	Large Dolphins	Small Dolphins
Maximum displacement	60,000 tons	3,300 tons
Maximum berthing speed	½ ft. per sec.	1 ft. per sec.
Kinetic energy (impact at W.L. + 3'-3")	1,400 in-tons	300 in-tons
Static Load (rope pull on bollard)	80 tons	20 tons
Static Load (wind pressure at W.L. + 1'-8")	100 tons	15 tons

Though the energy to be absorbed by a dolphin structure can vary in normal cases from 0.25 to 0.75 times the total kinetic energy, the assumption of half the total kinetic energy is this case was felt justified. Because the berthing facility is rather exposed to prevailing westerly winds, the assumed berthing velocities were higher than normal for the calm, tideless waters of the port.

Three cases of loading were investigated:

(1) A static load from various directions on the boll d owing to the pull of the mooring lines.

(2) A static load on the timber fendering near the water surface owing to wind forces.

(3) A dynamic load from various directions at the level of the lower brace due to the impact of berthing vessels.

To determine the driving depths and the bending moments of the piles, soil characteristics had to be ascertained. For this purpose deep soundings with a cone penetrometer and borings were made and some undisturbed samples taken. The subsoil was built up from strata consisting of fine sand, clay, and a little peat in various mixtures. From triaxial compression tests, it was determined that an internal friction angle of 20° was representative. The specific weight of the soil was found to be 1.8 tons per cubic meter, and 1.0 tons per cubic meter respectively above and under water. Due to the fine texture of the soil and its low permeability, the higher weight of soil was used in the formulas where dynamic (short duration) loads were involved.

(b) Calculations for the Dolphins. The depth of penetration, the point of maximum moment X_o, and the maximum load were calculated by the method of Dr. Blum. The designers felt that the total width of the front pile rows would be a fair assumption as to what part of the soil adjacent to the piles contributes in mobilizing soil resistance, i.e. 14'-1" for the large dolphins and 8'-4" for the small dolphins. On this basis X_o and total penetration for the large dolphins were 15' and 44'-6" respectively. For the small dolphins the point of maximum moment and total pile penetration were found to be 10' and 31' respectively.

Since the static loads proved to be more critical for the design of these dolphins, the Blum method gave good results. It should be pointed out however that the Blum method (and other similar methods) is not quite correct in case of dynamic loads. According to some experiments conducted by Professor Geuze of the Soil Mechanics Laboratory of Delft, the value of X_o proved somewhat smaller for dynamic loads. The fact that the results of the Blum method give too favorable a picture regarding energy absorption of the structure should therefore be taken into account.

The deflections under the worst loading conditions amount to 2'-4" for the large dolphins and 3' for the small dolphins when the impact is at the level of the lower brace and to 3'-8" and 4'-3" respectively when the impact is at the level of the top brace.

Bending tests carried out afterwards on single piles as well as on one of the small dolphins gave results which showed a very satisfactory agreement with the calculated deflections.

addition, comparative deep sounding tests with a cone penetrometer were carried out before and after the driving -- the latter made inside the pile -- in order to observe the effect of the driving on the density of the various strata inside and under the pile. Results indicated that the hollow pile acted more or less like a closed one due to clogging of the material compressed inside.

(c) Construction of Dolphins. A single acting steam hammer with a weight of 9000 lbs. and a drop of 2 to 3 ft. was used. The driving met with no difficulties in spite of the fact that the crew had no experience in the driving of long and heavy tubes. Each pile of the smaller type took about half a day to drive, whereas for the bigger type nearly three quarters of a day was required for each pile. The actual driving of about 40 ft. took less than one hour.

The supports were welded to the tubes, and the lowering of the braces onto them was a simple job. Bolting of the timber fendering onto the bracing completed the dolphins.

The time from placing orders for the piles to final completion was only a few months.

(d) Alternate Designs Considered. A design that was contemplated consisted of a few tubular steel piles of a smaller diameter in front of a pile of large diameter. By giving the thinner piles more play in the holes of the braces while taking into account the difference between the deflections of the heavier and the lighter piles under ultimate load, a greater resilience of the dolphins under smaller impacts would be achieved. In this way a "softer" berthing could have been offered for smaller craft than in the case of all piles having the same diameter. Because of

the limitation imposed with regard to maximum diameter, however, such a design was not selected for reasons of economy.

Designs incorporating hardwood piles, sheet steel piling, and hollow steel piles of various shapes were also considered. The hardwood pile design was ruled out because of the large number of long piles that would have been required, the extra cost of pile driving, and very long time for delivery of piles. Sheet steel piling driven in a number of short rows, one behind the other, though leading to a design attractive from an economic point of view, was not used because it offered flexibility only to blows in the normal direction. Studies with different hollow pile cross-sections and different grades of steel showed the tubular, high tensile steel pile to be the most economical solution.

4. Other Examples of Tubular Steel Dolphins

After the first successful application of high strength tubular steel dolphins in Amsterdam, additional similar multiple and single tube dolphins quickly followed (Ref. 64).

(a) For an extension to berthing facilities of "Amatex" a comparison was made between a dolphin consisting of 6 Peine piles hinged and with torsion-resisting bracing at the top, a dolphin consisting of a single tube with a

diameter of 47½", and a second single tube dolphin with a 50-3/8" diameter tube. The results of the comparison, which are given in Table 3.1, show that the single tube dolphins should be 40% to 50% cheaper than the four tube type first constructed by "Amatex," and between 10% to 25% cheaper than the 6 Peine pile type. However, since it was considered that the large diameter, single tube dolphins would be difficult to drive, the 6-pile Peine dolphin was adopted.

(b) The first application of large single tube dolphins was made in Rotterdam at a site for mooring floating dry docks. As may be seen from Figure 3.10, three dolphins are used for mooring of a large dry dock (suitable for ships up to about 10,000 tons), and two are used for simultaneous mooring of an intermediate size dock on one side and a small dock on the other side. The docks are moored independently of each other by means of attachments which slide up and down on the dolphin tubes. The dolphins are designed to resist the static forces imposed on them by wind pressure on the docks. Design data for these dolphins is given in Table 3.2.

The dolphins noted at the ends of the jetties of Figure 3.10 are each constructed of four PSp50S/70 plus four PSpw120 pile sections and are used for securing mooring lines of ships berthed at the jetties. They are

TABLE 3.1

Per Dolphin	Unit	Amatex berth (see Fig)				
		I	E	E_1	E_2	II
Type of pile Section/diameter	ins.	Mann tube 28 3/8	Peine PSP 505/70 + 4 PSpw120	Mann tube 47 1/4	Mann tube 50 3/8	Mann tube 39 3/8
Number		4	6	1	1	1
Thickness of wall (max.)	ins.	15/16		1 3/4	1 3/16	2 3/16
Yield stress (of part with the highest grade of steel	tons/sq. inch	28.6	22.7	28.6	28.6	28.6
Length (max.)	ft.	98	93	105	102	103
Weight of piles	tons	4 x 10	6 x 10	35	26	32
Energy-absorption	ft. tons	115	96.4	131	99	126
Max. moment	ft. tons	5220	6400	6580	5310	5430
Δ/P	ins./Ton	0.28	0.209	0.200	0.232	0.291
Static load at 3' 6" above water level (N.A.P.)	tons	80	101	98	80	80
Depth of water	ft.	43	43	43	43	43
Approx. total cost (basis Jan 1955)	£	10,200	6,800	6,200	5,100	5,900

TABLE 3.2

Per pile (single tube)	Unit	Dock A	Dock B
Type of pile		Mann tube	Mann tube
Diameter	ins.	57	49 3/16
Thickness of wall (max.)	ins.	1 3/8	1 3/16
Yield stress (of part with the highest grade of steel)	tons/sq. inch	28.6	28.6
Length	ft.	107	100
Weight of piles	tons	35	23
Max. moment	ft. tons	7930	5050
Static load at 16' 5" + N.A.P.)	tons	102	67.5
Depth of water (− N.A.P.)	ft.	43	33
Angle of internal friction down to 57' 5" − N.A.P.	degree	0	0
Below 57' 5" − N.A.P.	degree	30	30

TABLE 3.3

Per Dolphin	
Type of pile Diameter	Mann. Tube 45 1/4"
Thickness of wall (max)	1 7/16"
Yield stress (of part with the highest grade of steel)	28.6 Tons/sq. inch
Length	90 ft.
Weight of pile	22 Tons
Energy absorption	96.4 ft.-Tons
Max. moment	5020 ft. Tons
Δ/P	0.161 ins./Ton
Static load at 13 ft. 2 in. + N.A.P. (Normal Amsterdam Level)	89.7 Tons
Depth of water below N.A.P.	59 ft.
Angle of internal friction	20°

DOLPHIN DESIGN DATA

(After T.J. Risselada; Ref. 64)

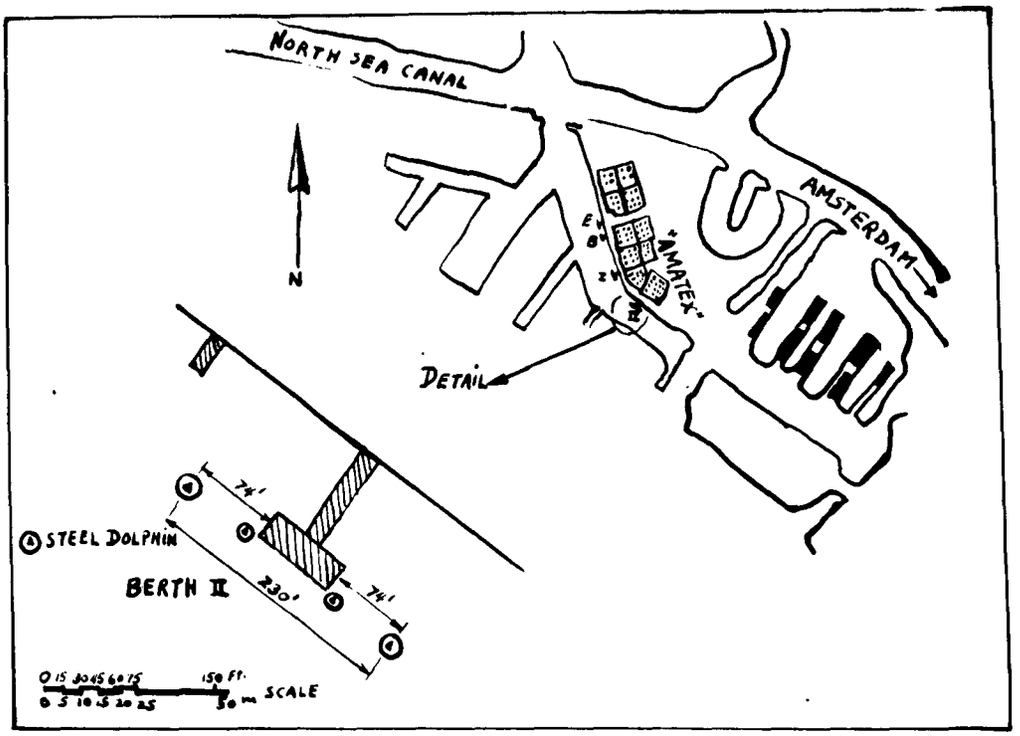

LOCATION PLAN FOR DOLPHINS OF "AMATEX" BERTH II

Figure 3.9

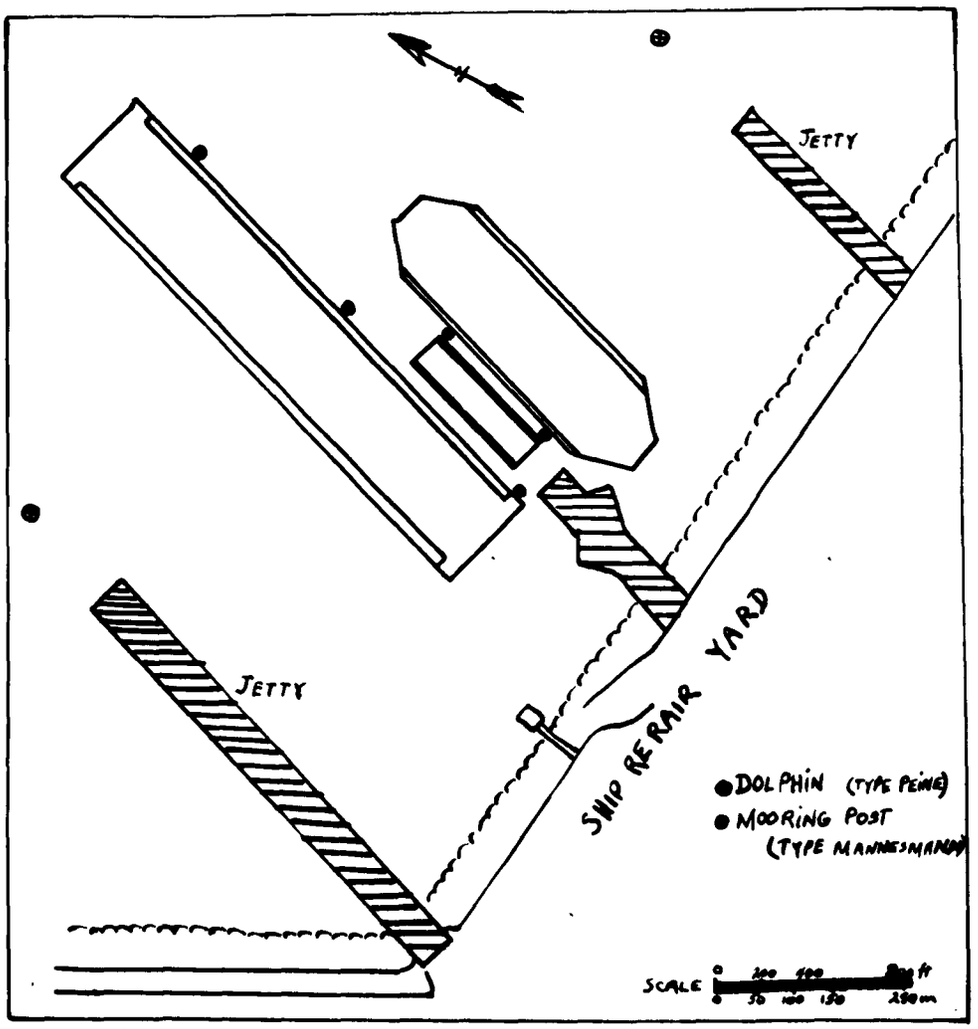

LOCATION PLAN OF DOLPHINS FOR FLOATING DRY-DOCKS

Figure 3.10

designed to withstand pulls of 60 to 80 tons. Since resilience was not required for these dolphins, the top bracings were welded direct onto the piles to form rigid frame moorings.

(c) Following the successful erection of the single tube dolphins referred to above, "Amatex" installed single tube berthing dolphins as shown in Figure 3.11. The basic requirements for these dolphins were the same as for the dolphins previously installed by "Amatex." To increase flexibility, the diameter of the tubes was reduced to 39-3/8", and the wall thickness was enlarged correspondingly. Design and cost data are given in Table 3.1 for comparison with dolphins previously constructed or considered by "Amatex." The tubes were driven without the aid of jetting.

(d) Another application of single tube dolphins was made by "Tanker Cleaning Ltd." at the Wilhelmina Dock at Shiedam. Design data for these 45¼" diameter dolphins are given in Table 3.3.

(e) The most recent use of high strength tubular steel dolphins can be found in Amsterdam at the tanker cleaning works of N.D.S.M. Two dolphins each consisting of two 39-3/8" diameter piles rigidly connected at the top. As may be noted from Figure 3.5 each dolphin is designed

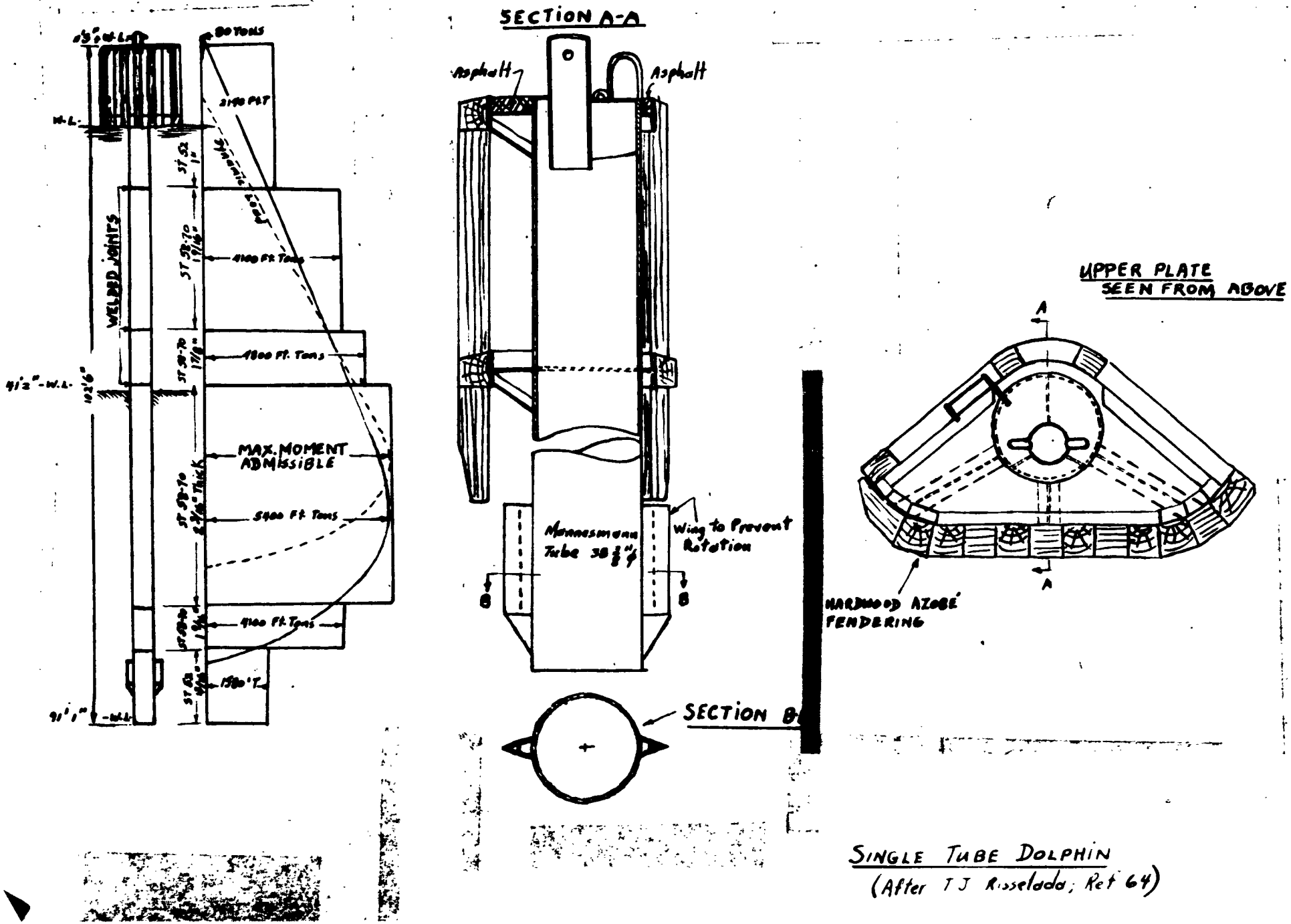

SINGLE TUBE DOLPHIN
(After T J Risseladda; Ref 64)

Figure 3.11

to receive impact loading normal to the plane of the frame formed by the piles and bracing. The dolphins are therefore flexible and torsion-resisting for maximum efficiency against eccentric impacts.

(f) Flexible dolphins have been suggested by many engineers as an effective way of berthing supertankers. Such dolphins could be installed in "offshore" locations, avoiding the usual necessity for extensive harbor improvements to accommodate the 40' plus drafts of these enormous vessels. Designs for dolphins capable of berthing tankers with a displacement of 100,000 to 135,000 tons (about 75,000 to 110,000 dwt) have been presented by T. J. Risselada (Ref. 64).

Two principal cases are considered for these designs: case A in which the tankers are in an enclosed dock (tidal range nil), and case B, in which they are moored in an open tidal basin (tidal range of about 16½'). Berthing velocities of 5 inches per second and 6 inches per second were assumed for the respective cases. The results are given in Table 3.4. The following interesting conclusions can be drawn from these results:

(1) For very large dolphins of non-tubular sections, the static loads appear to be the determining factors; whereas when tubular sections are used, the dynamic loads seem more critical.

TABLE 3.4

DOLPHINS FOR SUPER TANKERS (After T.J. Risselada; Ref. 64)

	Design data, Requirements and Data of the Structure	Unit	Per Dolphin					
			Case A		Case B *		Case B **	
			type		type		type	
			Peine	Mann	Peine	Mann	Peine	Mann
Design Data:	Depth of water	ft.	49	49	from 49 to 69	from 49 to 69	from 49 to 69	from 49 to 69
	Angle of internal friction	degree	25	25	25	25	25	25
	Displacement	tons	100,000	100,000	135,000	135,000	135,000	135,000
	Speed of berthing	ins./sec	5	5	6	6	6	6
Requirements:	Energy-absorption at 20" + H.W. (1)	ft. tons	180	180	350	350	350	350
	Static load at 10 ft + H.W (under the most unfavourable direction)	tons	150	150	200	200	250	250
Data of the structure:	Number of piles		3 × 6	1	4 × 8	1	4 × 9	1
	Section/diameter (external)	ins.	PSp 60S	63	PSp 60S	73	PSp 60S	85
	Thickness of wall	ins.	—	1½	—	2 3/16	—	1⅞
	Yield stress of the highest grade of steel used	tons/sq. inch	22.7	28.6	22.7	28.6	22.7	28.6
	Length	ft	108	111	136	139	137	154
	Weight	tons	99	40	209	83	248	84
	Energy absorption at 20" + H.W. (2)	ft. tons	417	186	735	350	889	350
	α = the angle with respect to the normal to the front at which the force acts. α = 0°	ft. tons	299	186	568	350	702	350
	α = 20°	ft. tons	203	186	397	350	509	350
	α = 45°	ft. tons	144	186	266	350	328	350
	α = 70°							
	1/p: flexibility at 20" + H.W (normal to the front)	ins/t	0.256	0.174	0.174	0.085	0.151	0.063
	Static load at 10 ft + H.W.; (under the most unfavorable direction)	tons	150	150	200	213	254	250

(1) In contrast with assumptions made in earlier cases, it is assumed here that, in view of the great length of the vessels, one dolphin must be able to absorb 70 per cent instead of 50 percent of the total Kinetic Energy.

(2) It is assumed that the forces pass through the center of gravity of the structure.

(2) If non-tubular sections are adopted, it is important to specify the angle at which the vessel may hit the dolphin.

(3) It is evident that for still greater energy-absorption capacity, the flexibility of the structures must be increased by reverting to, for instance, a greater number of smaller diameter piles, or else additional resiliency must be provided by application of special fendering systems to the dolphins.

B. Interlocking Pile Groups

Examples of dolphins composed of box pile groups or sheet pile sections joined together by means of interlocks are given in this part. In particular, a somewhat rigid type dolphin made of Larssen "V" pile sections and with a resilient fender system for additional energy absorption capacity will be described. Three such dolphins were installed for a granary berth in the Port of Amsterdam (Ref. 63).

In addition, berthing and mooring dolphins similarly constructed but using Peine pile sections will be illustrated with typical calculations.

1. Dolphin made with Sheet Pile Sections

Due to limited clearances required for proper operation of grain unloading equipment, flexible dolphins could not be used. Rigid dolphin designs in hardwood and reinforced concrete were also considered but were ruled out in favor of this sheet pile design which utilizes second-hand Larssen sections.

(a) Design of Dolphin. As shown in Figure 3.12, the overall dimensions of each dolphin are 5' x 16' and 77' in total length. The fore and aft walls were connected over nearly the whole height of intermediate sheet pile partitions partly to transmit shear forces, partly to provide additional stiffness to the oblong cross-sectional form. Since friction in the interlocks was not felt to be completely reliable, all interlocks above the water surface were welded. To prevent buckling of the construction as a whole and to increase its torsional resistance, two concrete braces and a concrete cap were cast in the dolphin. The intermediate spaces between the concrete pours were filled with coarse sand.

As the resiliency of this type of dolphin is low, a 15" Goodyear rubber tube fender system was provided.

The basic data used for the dolphin design are as follows:

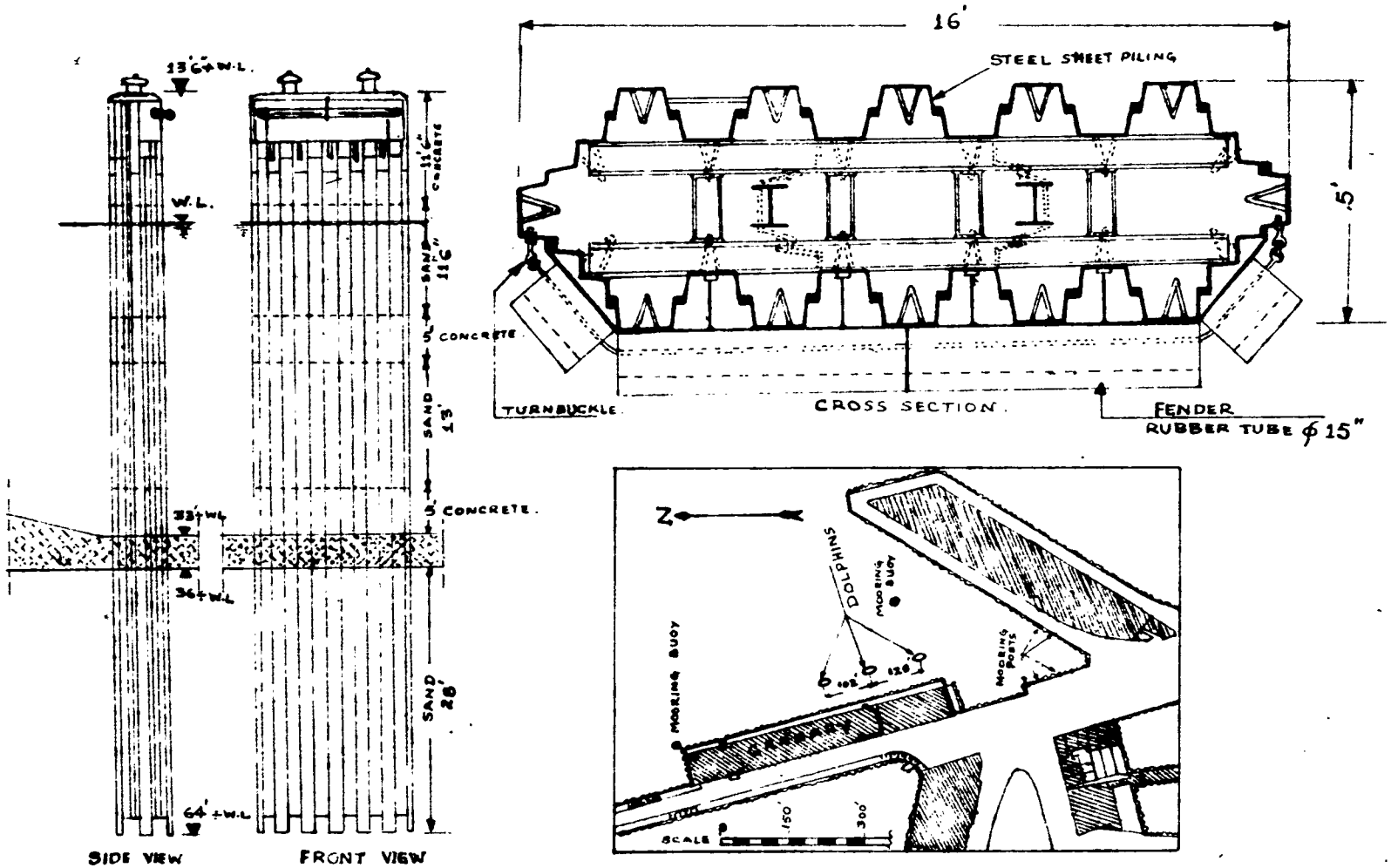

RIGID STEEL DOLPHINS IN FRONT OF A GRANARY.

(After T J. Risselada ; Ref. 63)

Figure 3.12

Maximum ship displacement	- 22,500 tons
Maximum berthing speed	- 8 inches per sec.
Energy to be absorbed by dolphin (impact at W.L. + 10'-10")	- 900 in-tons
Static load (rope pull at W.L. + 14'-1")	- 75 tons
Static load (wind pressure at W.L. + 10'-10")	- 100 tons

The maximum berthing speed usually adopted in the port is 6" per sec. In this case a higher berthing speed was selected because of the greater amount of maneuvering necessary for berthing. The coefficient for calculating the amount of energy to be absorbed was assumed as 0.45.

As a result of soil investigations which showed that the dolphins would penetrate into strata of both high and low resistance, an average angle of internal friction equal to 25° was used.

Compared with the tubular type flexible dolphins, the relation between the dimensions of the cross-section and the height of these rigid dolphins is of much greater importance. Nevertheless, the Blum method of determining end-fixation and admissible loads was still considered to give the best results, especially since the static loads were the determining factor in the design.

Three cases of loading were investigated -- static rope pull from various directions, static load due to wind forces, and dynamic load due to berthing impact. A driving depth of 31 ft. satisfied the first two conditions. However, since the maximum deflection amounted to 7 inches and the final impact force to be resisted to 175 tons, the dolphin structure alone did not satisfy the dynamic requirements. Accordingly, a single string of 15" rubber tube fendering was installed to provide the additional energy absorption capacity required for safe berthing.

(b) Construction of Dolphins. Three methods of installation were examined: erection by driving sheet piles consecutively with floating pile driver; assembly of sheet piles in advance and installation by driving in groups or by sinking the complete unit with the aid of a self-emptying borer; and sinking of the entire unit by means of a soil vibration method.

The first method, which follows tradition most closely, requires extreme precision and perfect driving technique. The second method offers the advantage that there is less difficulty in the correct assembly and siting of the dolphin. However, more working space is required and the support given to the piles by the surrounding soil is reduced due to soil disturbance created during the boring operation. The third method not only completely meets

the latter difficulties, but will even have a favorable influence on the subsoil and consequently on the driving depth and fixation of the dolphin.

Due to non-availability of the equipment required for the third method, and because of favorable water conditions such as calm water and no tides, it was decided to erect the dolphins according to the first method. (An expert crew of pile-driving artisans was also available.) The driving was done with a normal floating rig of the Dutch type using a double acting steam hammer weighing 4 tons and having a drop of 3 ft. Jetting was prohibited. A frame strutted against the quay of the granary was used to facilitate proper location and alignment of the piles.

After the dolphins were erected, rubble was dumped into a trench dredged around the dolphins in order to prevent scour caused by the ships' propellers.

2. Dolphin made with H-Pile Sections

Figures 3.13(a) and (b) represent examples of dolphins in this general category. The first design which is relatively rigid and without fendering is suitable for mooring; the second is more flexible and consequently serves for berthing as well as mooring purposes. Numerous dolphins such as these have been built in various harbors of Germany and Holland (Refs. 56, 64).

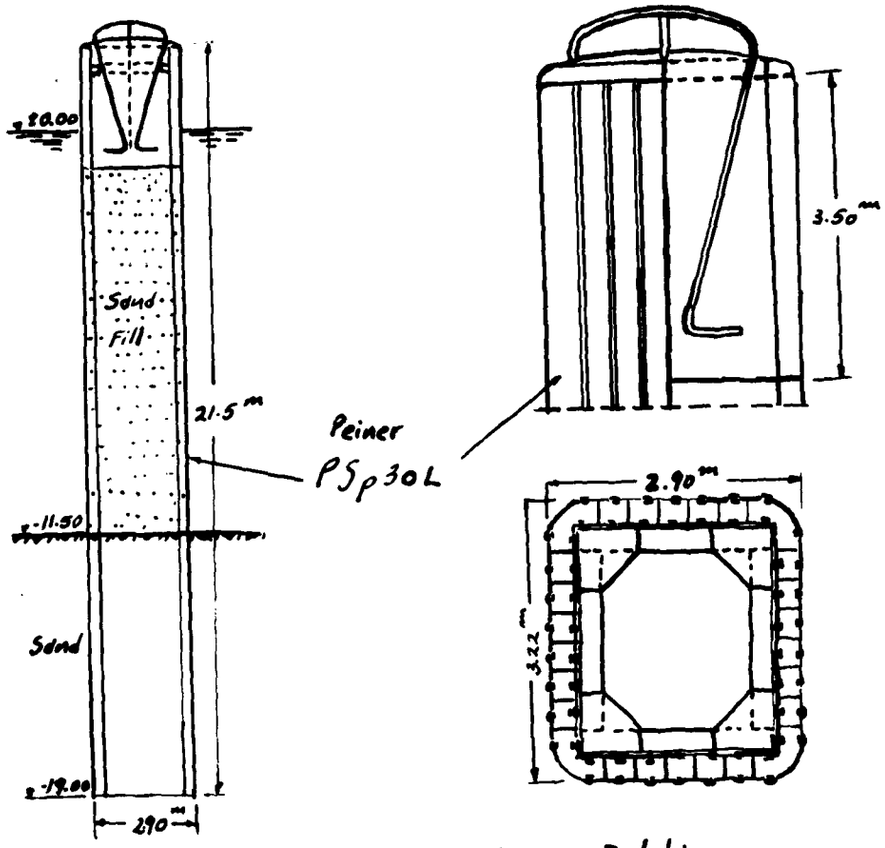

Figure 3.13 (a) Mooring Dolphin

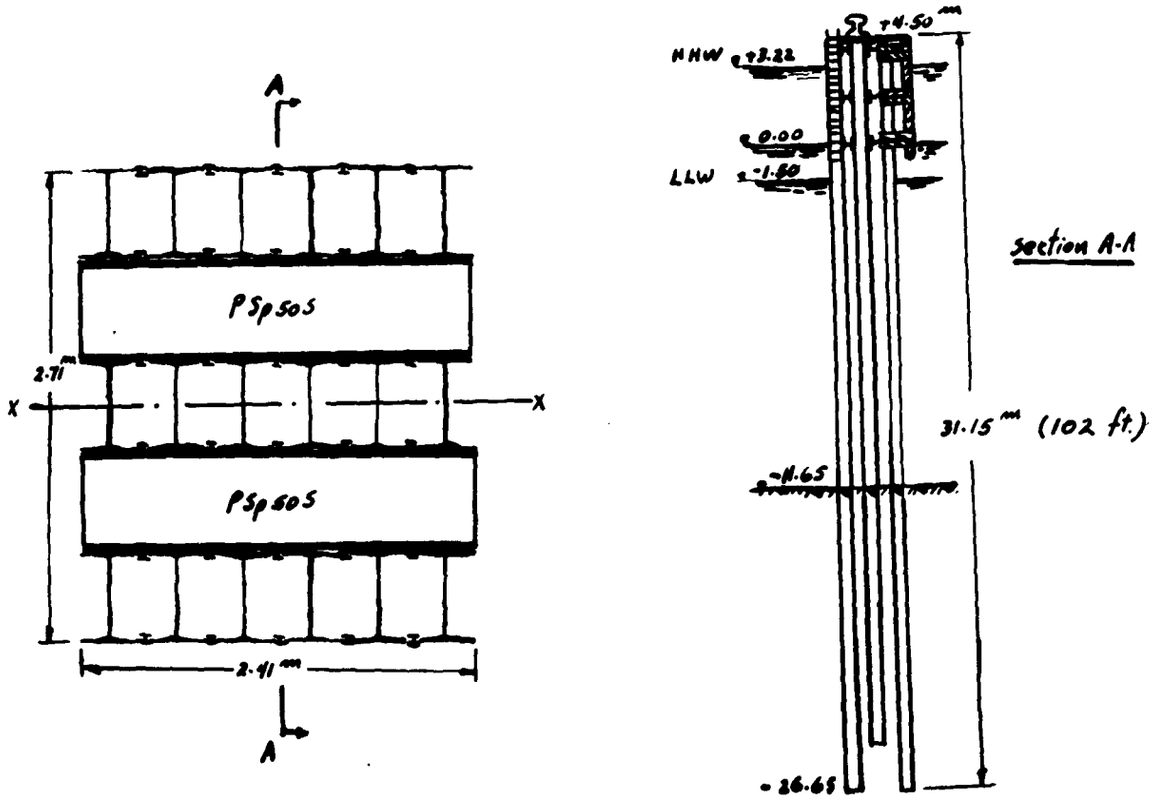

Figure 3.13(b) Berthing and Mooring Dolphin

Calculations for the second type are given below to illustrate the method of analysis. The dolphin consists of three short parallel walls. Each wall is made up of 6 Peine H-Piles (PSp50S with an ultimate strength of 5,000 to 6,000 Kgm per sq. cm. -- 71,000 psi to 85,000 psi -- and an elastic limit of 3,600 Kgm per sq. cm. or 51,000 psi) joined together with steel interlocking member. The walls are joined at three levels near the top by means of short stays which are also made of PSp50S sections with reinforced webs to take on the impact reactions. The total moment of inertia about the X-X axis is 2,354,100 cm.^{4} (98,000,000 in.^{4}). The corresponding section modulus is 81,200 cm.^{3} (133,000 in.^{3}). The modulus of elasticity, E, of the steel is 21 x 10^6 tons per sq. meter (30 x 16^6 psi).

Basic design data for the dolphin are:

Ship displacement	- 36,000 tons
Lateral approach velocity	- 0.24 meters per sec. (0.79 ft/sec.)
Static load (maximum mooring line pull applied at + 4.50 meters above Low Water Level)	- 130 tons (286 kips)

For the foundation bed a weight unit of volume, γ = 1.0 tons per cu. m. (77 lbs. per cu. ft.) and an angle of internal friction $\phi = 25^\circ$ are given.

(a) Determination of Point of Maximum Moment, the Maximum Moment, and Required Penetration Depth for a Maximum Static Pull of 130 Tons (286 kips) is done by the Blum method (Refs. 56 and 9).

With the given soil conditions, the factor f_w used in this method to determine the soil resistance is:

$$f_w = \gamma \tan^2(45^\circ + \frac{\phi}{2}) = 2.47 \text{ tons per cu. m.}$$

The point of maximum moment is determined from the following equation:

$$M_x = P(h + X) - f_w \frac{bX^3}{6} + \frac{X^4}{24}$$

Differentiating and setting $\frac{dM_x}{dX} = 0$ the following equa- for P is obtained:

$$P = \frac{f_w}{6} \cdot X_m^2(X_m + 3b)$$

in which X_m is the point of maximum moment.

Since P = 130 tons, the fixing point, and thus the point of greatest moment as determined from this preceding equation, is:

$$X_m = 5.06 \text{ meters } (16.6 \text{ ft.})$$

The maximum bending moment is then found to be 2563 ton-meters (18,500 kip-ft.) from the moment equation. The corresponding maximum bending stress in the steel is 3160 Kgm per sq. cm. (44,700 psi) which is satisfactory if

the allowable stress is assumed to be equal to the yield strength of 3600 Kgm/sq.cm.

Calculation of the necessary driving depth is made according to the following equation:

$$t_o^4 + 4b \cdot t_o^3 - \frac{24}{f_w} \cdot P \cdot t_o - \frac{24}{f_w} \cdot P \cdot h = 0$$

from which, by trial and error,

$$t_o = 11.80 \text{ meters } (38.7 \text{ ft.})$$

This value represents the driving depth with an assumed load distribution, and so the calculated penetration t_o is increased by a factor of 1.2 to account for the actual distribution. Therefore,

$$t = t_o \cdot 1.2 = 14.15 \text{ meters } (46.4 \text{ ft.})$$

(b) Calculations for Impact Load resulting from collision of the dolphin with a vessel are made essentially in the same manner. As the most unfavorable load condition, it is assumed that the 36,000 ton vessel hits the dolphin beam-on at the level of Low Low Water or -1.50 m. below Low Water.

The maximum moment in the dolphin, without exceeding the yield strength of the steel, is 2920 ton-meters (21,100 kip-ft.). Then, using the Blum equations,

X_m = 6.02 m. (19.8 ft.)

t_o = 12.52 m. (41.1 ft.)

t = 15.00 m. (49.2 ft. -- this is the controlling driving depth)

The maximum impact force P is 198.5 tons (436 kips).

The deflection at the point of impact, according to the following equation also developed by Blum, is:

$$\Delta = \frac{1}{EI}\frac{P(h + t_o)^3}{3} - \frac{f_w \cdot t_o^4}{360}(15bh + (3h + 12b)t_o + 2.5\ t_o^2)$$

from which $\Delta = 1.04$ m. (3.3 ft.)

The impulsive energy that can be absorbed is calculated from the deflection and the maximum impact force according to:

$$\frac{m\ V^2}{2} = \frac{P\ \Delta}{2} = 103 \text{ m-tons } (743 \text{ ft-kips})$$

i.e. assuming no loss in kinetic energy.

The permissible collision speed of the 36,000-ton vessel, without causing permanent deformation in the dolphin, is therefore

$$V = 0.24 \text{ meters per sec. } (0.79 \text{ ft/sec.})$$

which is adequate.

C. Pile Cluster Dolphins

1. Introduction

Groups of timber piles driven in a symmetrical pattern and then drawn together and fastened rigidly at the top form the commonest type of dolphin used in the United States. Circular pile groups are generally used for dolphins

subjected to all-round loads, although in special locations where the direction of the greatest loads is known, square pile groups can be used as they are somewhat stronger.

Pile cluster dolphins are simple to construct and easy to maintain. However, their performance depends very largely on the rigidity of the connections between the piles. If the connections are not very well made, tests have shown that the strength of the structure is greatly reduced. On the other hand, if the connections are rigid, the dolphin itself is a very rigid structure, so that it will not absorb much energy before loads rise high enough either to cause plastic yielding of the soil at some point or to cause failure of the structure itself.

Omni-directional pile cluster dolphins are usually built in three sizes: 7-pile clusters, 19-pile clusters and 30-pile clusters. Plan views of such dolphins are shown in Figure 3.14. The first are deemed suitable for ships of 1500 tons and under, the second for ships up to the size of AK class cruisers, and the third for ships up to 80,000 t .s.

2. Failure of Pile Cluster Dolphins

The possible failure modes of a dolphin are:

(a) Pull-out of the tension piles.

(b) Failure of a pile in bending due to contact with a ship.

PILE CLUSTER DOLPHINS

PLANS OF DOLPHIN HEADS

7-PILE DOLPHIN

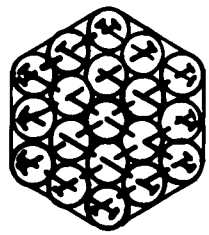

19-PILE DOLPHIN

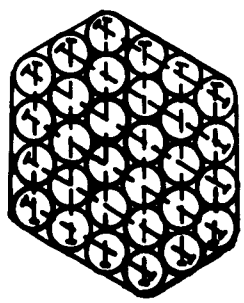

30-PILE DOLPHIN

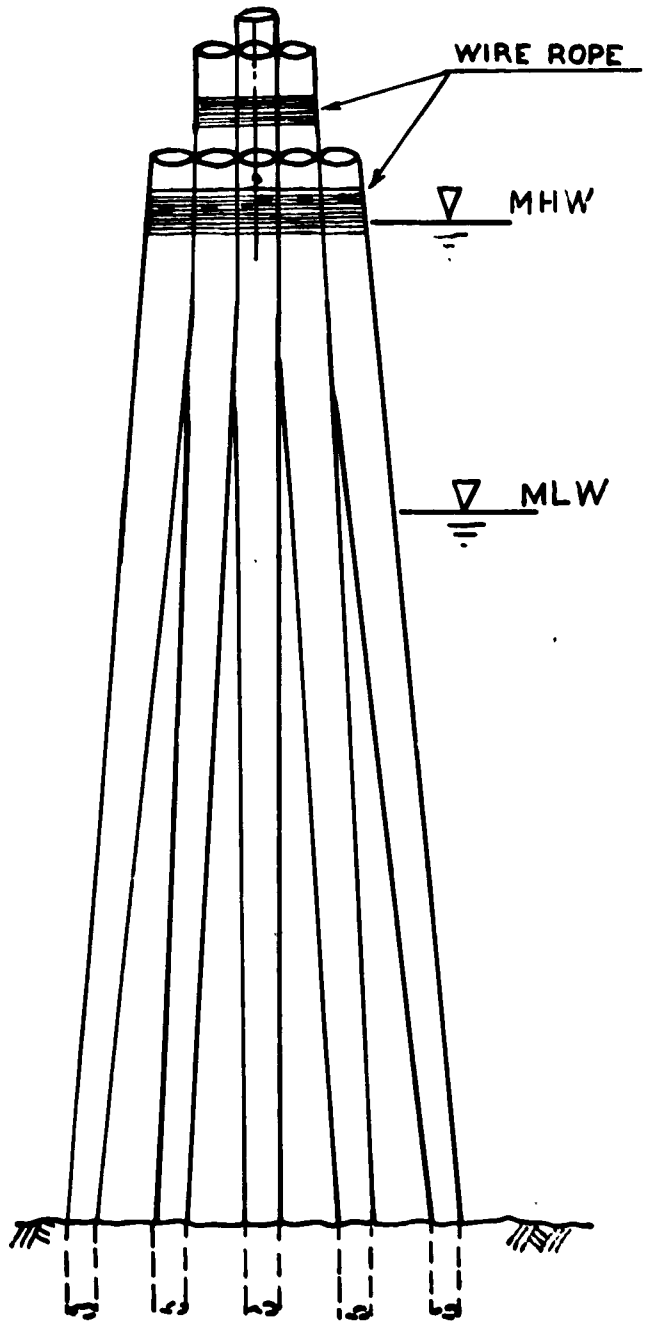

ELEVATION OF 19-PILE DOLPHIN

FIG. 3.14

16 - PILE SQUARE DOLPHIN

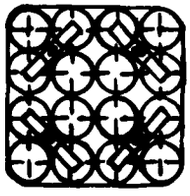

PLAN VIEW OF HEAD

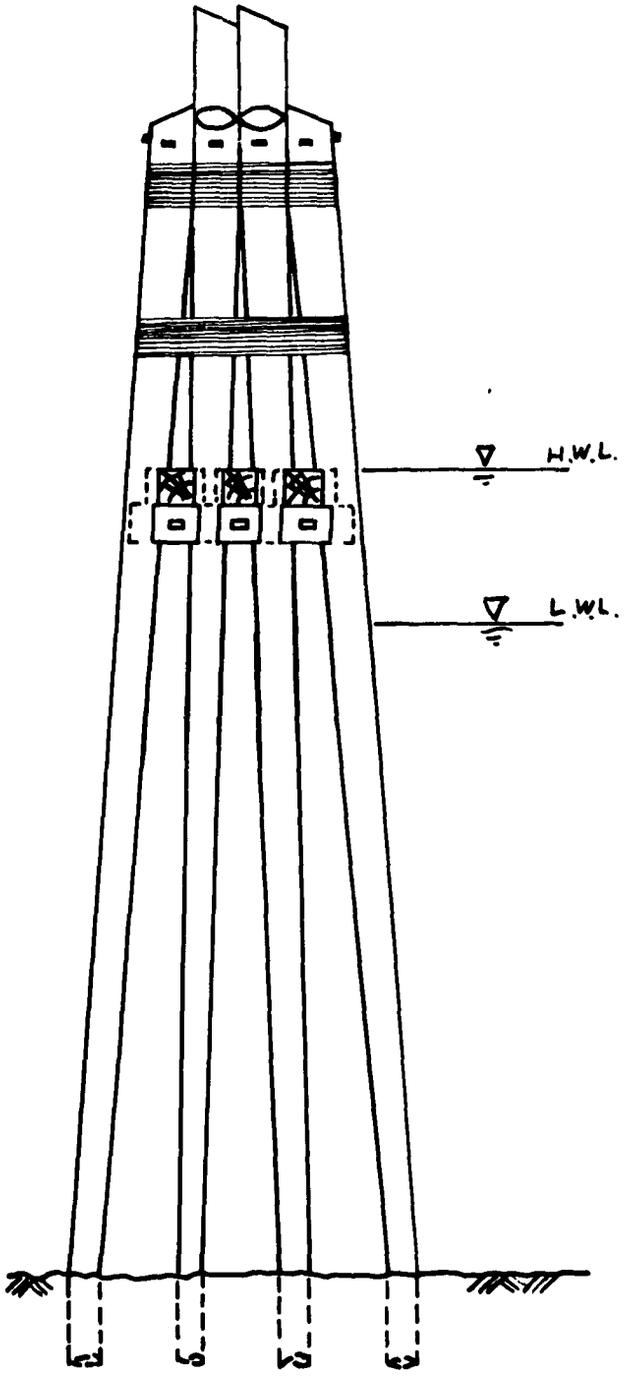

FIG. 3.15

(c) Soil failure under lateral loading.

(d) Buckling of a compression pile.

(e) Shearing of connections at the top of the dolphin.

However, the most frequent cause of failure in practice is item (b), when contact between the hull of a ship and only one pile of the dolphin breaks the pile in bending. It can be seen that an obvious improvement in the design of a pile cluster dolphin would be to put a superstructure on the dolphin projecting out far enough to ensure that a ship's hull could not come into contact with any of the piles. This was in fact done at one American Naval installation at which dolphins were being damaged frequently: large collision mats were wrapped around the tops of the dolphins and there was no more trouble.

The failure of a dolphin due to a direct pull was investigated by Tschebotarioff in 1945, when model studies were made at Princeton (Ref. 75). These tests showed that initial failure occurred due to the pulling out of the tension piles, but that final collapse was due to breaking of the compression piles under combined thrust and bending stresses. Figure 3.16 shows one of the test dolphins and its displacements at failure. These experiments also showed that the piles remained rigidly connected at the top of the dolphin. Full-scale testing of a dolphin was carried

FAILURE MODE OF A 3-PILE DOLPHIN

(TSCHEBOTARIOFF'S TEST RESULTS)

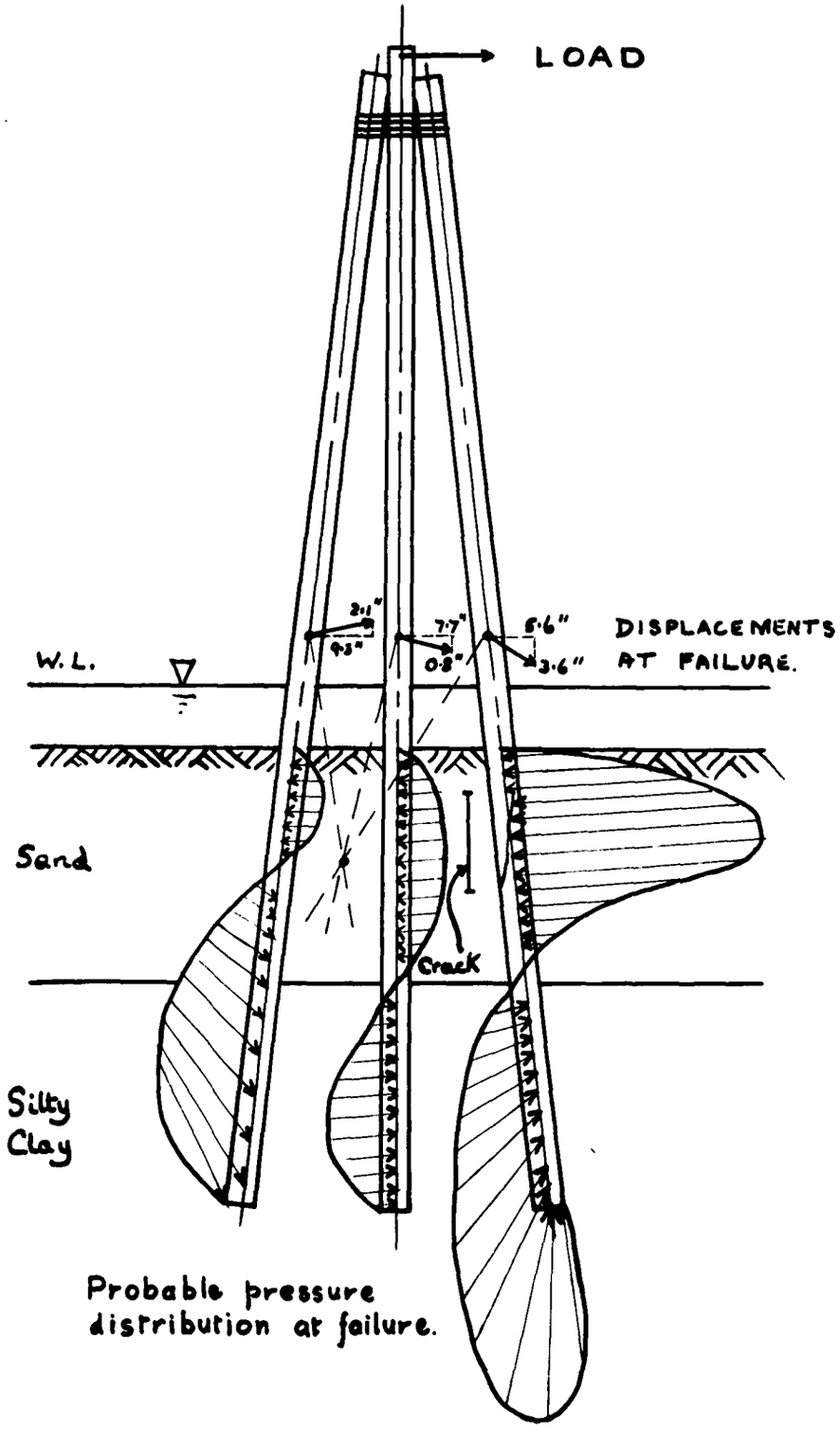

FIG 3.16

out by the Bureau of Yards and Docks at the New London Submarine Base when a single pile, two piles and a 14-pile dolphin were tested to failure. The results of these tests are given in Appendix A. It would have been interesting to see whether the deflections of a dolphin due to repeated applications of the same load reached a limiting value or continued to increase; but unfortunately this test was not carried out for a low enough load.

There are basically three design criteria for a pile cluster dolphin. They are:

(a) Static strength with no non-recoverable deformations of either structure or foundations.

(b) Energy absorption with no non-recoverable deformation.

(c) Ultimate strength and energy absorption to failure. This is really an accident design case: if a runaway occurs, the ship must be protected even though the dolphin is irreparably damaged.

Item (a) above is not too difficult to calculate, and it is suggested that the standard method given in the Bureau of Yards and Docks Mooring Guide, Vol. 1, be used. However, as noted previously, most dolphin failures are due not to pull-out of piles but to ships hitting and breaking individual piles. Items (b) and (c) provide the designer

with extremely complex problems, both structurally and in the soil mechanics involved. Even if the piles were assumed to be rigidly joined at their tops and encased at a point some feet below the soil surface, the structural analysis of a pile cluster dolphin would be complicated; but in an actual dolphin not only will there be some flexibility in the top connections, but also the load-deflection characteristics of the bottom of a pile are by no means those of a simple cantilever.

However, some calculations have been made for an idealized dolphin, assuming various limiting states of fixity of the piles, in order to give designers an envelope within which the loads in an actual dolphin will lie.

3. Energy and Load Analysis of a Pile Cluster Dolphin

Figure 3.17 shows the dolphin for which the calculations have been made. The tops of the piles are connected 15 ft. above water level, the water is 35 ft. deep and the piles are assumed to be encased 5 ft. below the soil surface. Properties of the piles are given in Table 3.5. It should be noted that the maximum allowable lateral load on the pile is given somewhat arbitrarily as 1000 lb. (Ref. 12, p. 178). This is the load below which no permanent deflection of the pile is experienced; and no present theory of laterally loaded piles gives this load. The two methods

DOLPHIN USED IN EXAMPLE

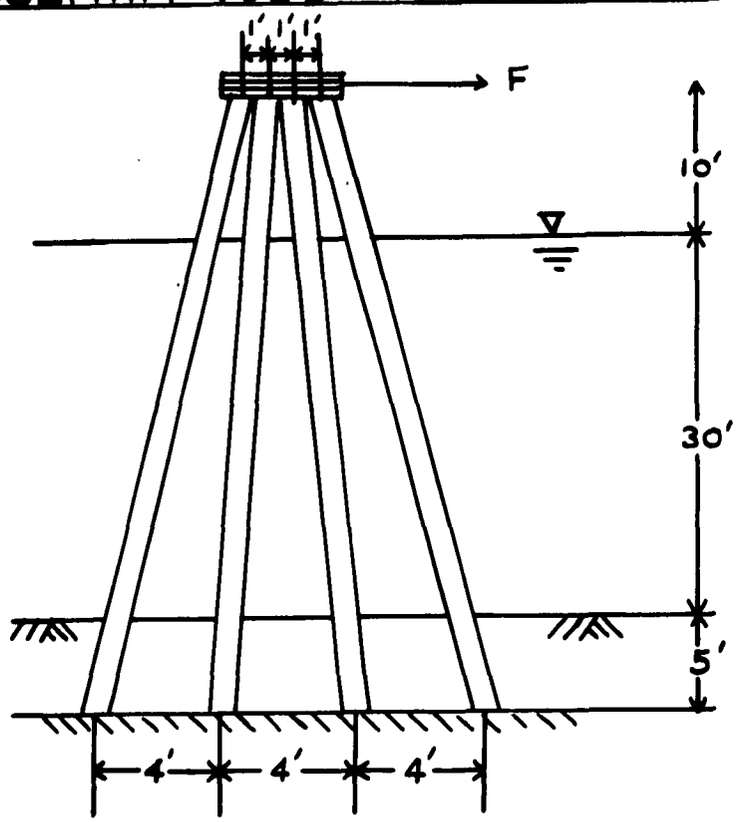

FIG 3.17

Pile Data

L = 55 ft.
D = 1 ft.
E = 1.73 x 10^5 kips/ft.^{2}
A = 0.785 ft.^{2}

I = .049 ft.^{2}
ℓ = 1 ft.
EI = 8.46 x 10^3 kips ft.^{2}
EA = 1.36 x 10^5 kips

Flexibilities		
δ_p	$L^3/3EI$	6.550
ϕ_p	$L^2/2EI$	.178
δ_m	$L^2/2EI$	.178
ϕ_m	L/EI	.0065
δ_R	L/EA	.000406

Pile	cos	sin
1	.996669	.081546
2	.999627	.027263
3	.999627	- .027263
4	.996669	- .081546

TABLE 3·5

mentioned in Chapter II only give the ultimate lateral load a pile can carry and the deflected shape of the pile when the soil is assumed to behave elastically.

(a) Effect of Lateral Load on an Individual Pile. The effect of the collision of a ship with only one of the piles in a dolphin is found by analyzing a uniform fixed-ended beam subjected to a concentrated force, as shown in Figure 3.18. To find the end moments M and N, we apply the two criteria that the angle changes and the vertical displacements of the ends of the beam are zero. If the beam ends are fixed against rotation the area of the M/EI diagram must be zero and so

$$M + N = P\ell \cdot ab \qquad (1)$$

As there is no relative vertical movement of the beam ends, the moment of the area of the M/EI diagram about either end must also be zero, which gives

$$2M\ell^2 + N\ell^2 = P\ell^3 ab(b + 1) \qquad (2)$$

Hence the two end moments are

$$M = P\ell \cdot ab^2 \qquad (3)$$
$$N = P\ell \cdot a^2 b$$

and the moment under the load is

$$2P\ell \cdot a^2 b^2 \qquad (4)$$

The reaction R of a support is

$$R = Pb\left[1 + a(b - a)\right] \qquad (5)$$

FIXED ENDED BEAM

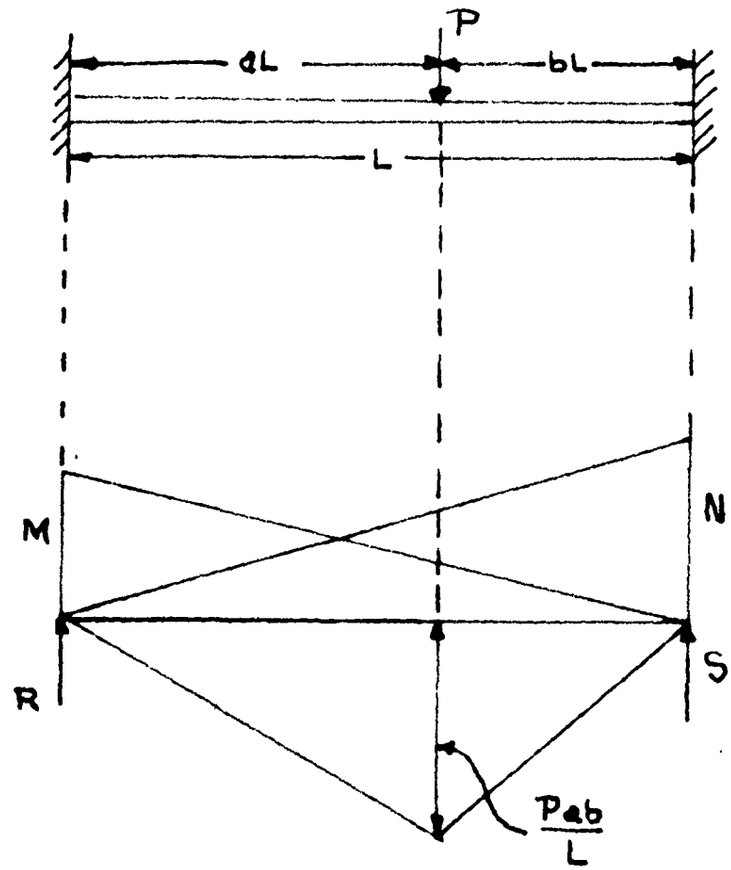

Bending Moment Diagram.

FIG 3.18

The deflection of the beam is obtained by integrating the angle changes along it, i.e. by calculating the cumulative area of the M/EI diagram. In this way, the deflection under the load is found to be

$$\Delta_p = \frac{Pa^3b^3\ell^3}{3\ EI} \tag{6}$$

One design limit is that the maximum allowable moment in the beam is

$$M_{max} = \frac{\sigma_A\ I}{y}$$

where σ_A is the allowable stress and y is the distance of the extreme fibres from the neutral axis. Then

$$2\ P_{max}\ell \cdot a^2b^2 = \frac{\sigma_A\ I}{y}$$

$$P_{max} = \frac{\sigma_A\ I}{2\ell\ a^2b^2y} \tag{7}$$

which is the maximum allowable force for the given values of a and b.

The energy absorbed in bending the beams will be

$$U = \frac{1}{2}\ P\Delta_p = \frac{P^2a^3b^3\ell^3}{6\ EI}$$

and the maximum energy will be

$$U_{max} = \left(\frac{\sigma_A\ I}{2\ \ell\ a^2b^2y}\right)^2 \frac{a^3b^3\ell^3}{6\ EI}$$

$$= \frac{\sigma_A\ I\ \ell}{24\ E\ a\ b\ y^2} \tag{8}$$

For the particular dolphin we are considering,

$$U_{max} = \frac{6000 \times 144 \times .049 \times 55}{24 \times 1000 \times 1.73 \times 10^5 \times 0.5^2} \cdot \frac{1}{ab}$$

$$= .00224 \cdot \frac{1}{ab} \qquad \text{ft.kips}$$

And this has a minimum value of 0.00896 ft.kips when a = b = 1/2. The maximum force the pile can stand is

$$P_{max} = \frac{6000 \times 146 \times 0.049}{1000 \times 2 \times 55 \times 0.5} \cdot \frac{1}{a^2b^2}$$

$$= \frac{0.77}{a^2b^2} \quad \text{kips}$$

and at the center of the pile this has the minimum value of 12.32 kips.

Another design limit is that the maximum lateral load on the soil at the foot of the pile must not exceed a certain value, R_{max}, say. In this case, equation (5) above gives

$$P_{max} = \frac{R_{max}}{b\left[1 + a(b - a)\right]}$$

For the dolphin taken as an example, the allowable lateral load is 1 kip, so that

$$P_{max} = \frac{1}{b\left[1 + a(b - a)\right]} \qquad \text{kips}$$

(b) Force Distribution in Dolphin Due to Lateral Load at Top. Three types of solution to this problem are considered. They are, in increasing order of difficulty:

(i) Two-dimensional solution - pile axes assumed coincident at the top.

(ii) Two-dimensional solution without the above assumption.

(iii) General three-dimensional solution for a multi-pile bent.

Using an IBM 650 computer, various results were obtained for the plane solutions (i) and (ii). No calculations have yet been carried out using method (iii), so that its theory has not been included in this Chapter but has instead been relegated to Appendix C. The calculations have been carried out so that designers might be able to have some idea of the order of the forces in the different piles and the way in which the loads are distributed.

It is assumed that all piles have the same flexibility characteristics and are all built into the ground at the same level. See Figures 3.18 and 3.19 for notation and quantities used.

It is shown that the simplifying assumption used in method (i) has a large effect on the force distribution and the deflection of the structure due to a horizontal load.

NOTATION

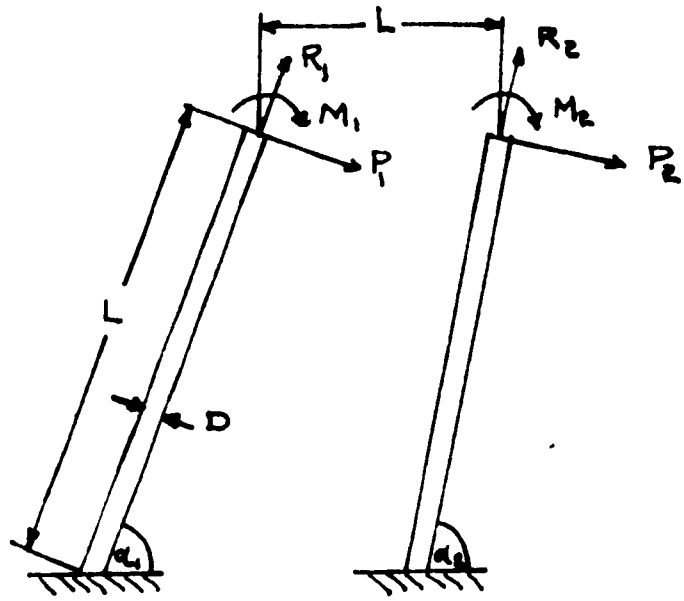

LOADS

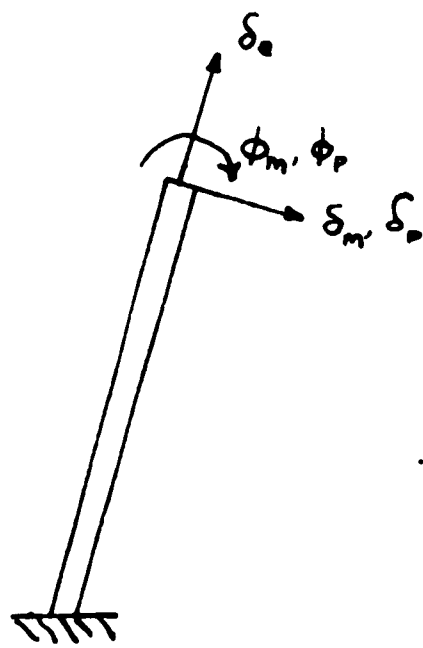

DISPLACEMENTS

FIG. 3.19

Method (i). Consider an n-pile, 2-dimensional dolphin, two piles of which are shown in Figure 3.19. All piles are taken to be rigidly connected at one point against relative rotation and slip. The equilibrium equations for the structure are:

Horizontal equilibrium:

$$\sum_{r=1}^{n}\left[P_r \cos\alpha_r + R_r \sin\alpha_r\right] = F$$

where F is the applied force.

Vertical equilibrium:

$$\sum_{r=1}^{n}\left[R_r \cos\alpha_r - P_r \sin\alpha_r\right] = 0$$

Moments:

$$\sum_{r=1}^{n} M_r = 0$$

These equations can be written in matrix form:

$$\left[C\right]\left\{V\right\} = \left\{F'\right\}$$

where $\left[C\right]$ is a $(3 \times 3_n)$ matrix of form

$$\left[\begin{array}{ccc|ccc|c|ccc}
\cos\alpha_1 & \sin\alpha_1 & 0 & \cos\alpha_2 & \sin\alpha_2 & 0 & & \cos\alpha_n & \sin\alpha_n & 0 \\
\sin\alpha_1 & -\cos\alpha_1 & 0 & \sin\alpha_2 & -\cos\alpha_2 & 0 & \cdots & \sin\alpha_n & -\cos\alpha_n & 0 \\
0 & 0 & 1 & 0 & 0 & 1 & & 0 & 0 & 1
\end{array}\right]$$

$\left\{V\right\}$ is a $(3_n + 1)$ column vector of form

$$\{V\} = \begin{Bmatrix} P_1 \\ R_1 \\ M_1 \\ \hline \vdots \\ \hline P_n \\ R_n \\ M_n \end{Bmatrix}$$

and $\{F'\}$ is the (3 x 1) vector $\begin{Bmatrix} F \\ 0 \\ 0 \end{Bmatrix}$

The compatibility equations between two adjacent piles are, for horizontal and vertical movements and clockwise rotations respectively:

$$P_r \delta_p \cos\alpha_r + R_r \delta_R \sin\alpha_r + M_r \delta_m \cos\alpha_r = P_{r+1}\delta_p \cos\alpha_{r+1}$$
$$+ R_{r+1} \delta_R \sin\alpha_{r+1} + M_{r+1} \delta_m \cos\alpha_r$$

$$P_r\delta_p \sin\alpha_r - R_r\delta_R \cos\alpha_r + M_r\delta_m \sin\alpha_r = P_{r+1}\delta_p \sin\alpha_{r+1}$$
$$- R_{r+1}\delta_R \cos\alpha_{r+1} + M_{r+1}\delta_m \sin\alpha_{r+1}$$

$$P_r\phi_p + M_r\phi_m = P_{r+1}\,\phi_p + M_{r+1}\,\phi_m$$

These equations also can be written in matrix form:

$$\boxed{A_r \quad B_r} \{V'\} = 0$$

where $\boxed{A_r \quad B_r}$ is the (3 x 6) matrix

$$\begin{bmatrix} \delta_p\cos\alpha_r & \delta_R\sin\alpha_r & \delta_m\cos\alpha_r & -\delta_p\cos\alpha_{r+1} & -\delta_R\sin\alpha_{r+1} & -\delta_m\cos\alpha_{r+1} \\ \delta_p\sin\alpha_r & -\delta_R\cos\alpha_r & \delta_m\sin\alpha_r & -\delta_p\sin\alpha_{r+1} & +\delta_R\cos\alpha_{r+1} & -\delta_m\sin\alpha_{r+1} \\ \phi_p & 0 & \phi_m & -\phi_p & 0 & \phi_m \end{bmatrix}$$

and $\left\{P'_r\right\}$ is a (6 x 1) vector which is the appropriate part of $\left\{P\right\}$. All 3(n - 1) compatibility equations can now be combined with the equilibrium equations to give

$$\begin{bmatrix} A_1 & B_1 & & & & \\ & A_2 & B_2 & & 0 & \\ & & A_3 & B_3 & & \\ & & & \ddots & \ddots & \\ & 0 & & & A_{n-1} & B_{n-1} \\ C_1 & C_2 & C_3 & C_4 & & C_n \end{bmatrix} \begin{Bmatrix} P_1 \\ R_1 \\ M_1 \\ \vdots \\ P_n \\ R_n \\ M_n \end{Bmatrix} = \begin{Bmatrix} \\ \\ 0 \\ \\ \\ F \\ 0 \\ 0 \end{Bmatrix} \qquad (1)$$

or,

$$\left[D\right]\left\{V\right\} = \left\{F\right\} \qquad (1a)$$

In this form the equations are suitable for solution on a digital computer. If n is not too large $\left[D\right]$

can be inverted directly, as in the examples given in this paper. Otherwise, a step-by-step procedure can be used as follows.

$$\begin{bmatrix} A_1 & B_1 \end{bmatrix} \begin{Bmatrix} V_1 \\ V_2 \end{Bmatrix} = 0$$

$$\therefore A_1 V_1 + B_1 V_2 = 0$$

$$\therefore V_1 = - A_1^{-1} B_1 V_2$$

But $C_1 V_1 + C_2 V_2 + \ldots + C_n V_n = F'$

$$\therefore - C_1 A_1^{-1} B_1 V_2 + C_2 V_2 + C_3 V_3 + \ldots + C_n V_n = F'$$

$$\therefore \quad C'_2 V_2 + C_3 V_3 + \ldots + C_n V_n = F'$$

Where $C'_2 = C_2 - C_1 A_1^{-1} B_1$

Similarly, $C'_3 = C_3 - C'_2 A_2^{-1} B_2$

and $C'_n = C_n - C'_{n-1} A_{n-1}^{-1} B_{n-1}$

And the system of equations condenses to

$$C'_n V_n = F'$$

$$V_n = \left[C'_n\right]^{-1} F'$$

Back substitution gives the complete pile load matrix V.

<u>Method (ii)</u>. This method is essentially the same as method (i), with the difference that various terms must be added to the previous expressions. The equations for horizontal and vertical equilibrium remain

the same; but the moment equation becomes

$$-\sum_{r=1}^{n-1}\left[P_r \sin\alpha_r \sum_{j=r}^{n-1} \ell_j\right] + \sum_{r=1}^{n-1}\left[R_r \cos\alpha_r \sum_{j=r}^{n-1} \ell_j\right] + \sum_{r=1}^{n} M_r = 0$$

and the (3 x 3n) matrix C becomes

$\cos\alpha_1$	$\sin\alpha_1$	0		$\cos\alpha_n$	$\sin\alpha_n$	0
$\sin\alpha_1$	$-\cos\alpha_1$	0	- - - - -	$\sin\alpha_n$	$-\cos\alpha_n$	0
$-\sin\alpha_1 \sum_{j=r}^{n-1} \ell_j$	$+\cos\alpha_1 \sum_{j=r}^{n-1} \ell_j$	1		0	0	1

The equations for vertical compatibility are also augmented, becoming for two adjacent piles,

$$P_r(\phi_p \ell + \delta_p \sin\alpha_r) - R_r\delta_R\cos\alpha_r + M_r(\phi_m \ell + \delta_m \sin\alpha_r)$$

$$= P_{r+1}\delta_p\sin\alpha_{r+1} - R_{r+1}\delta_R\cos\alpha_{r+1} + M_{r+1}\delta_m\sin\alpha_{r+1}$$

so that the (3 x 3) sub-matrix A_r now becomes

$\delta_p\cos\alpha_r$	$\delta_R\sin\alpha_r$	$\delta_m\cos\alpha_r$
$\delta_p\sin\alpha_r + \phi_p\ell$	$-\delta_R\cos\alpha_r$	$\delta_m\sin\alpha_r + \phi_m$
ϕ_p	0	ϕ_m

and sub-matrix B_r remains unchanged. With these amendments, the solution is carried out as for method (i).

(c) Piles Hinged at the Top. The equations of method (i) can be modified to deal with the problem of a dolphin whose piles are connected by hinges at the top. The modification consists simply of dropping out of the D-matrix all the rows and columns pertaining to moments and rotations: thus the n rows and columns 3, 6, ... 3n are dropped, reducing D to a 2n x 2n matrix. This can be seen by comparing the matrices shown in Tables 3.6 and 3.7.

(d) Piles Flexibly Connected at the Top. If a small amount of slip is allowed to take place between the piles at the top of the dolphin, its energy absorbing capacity can be considerably increased with very little loss of ultimate strength. It was therefore decided to investigate the effect of allowing limited slip between the piles. In the following work it is assumed that the piles are still not allowed to rotate relative to one another, but that springs have been put between them to allow relative vertical movement. This movement represents the working of the connecting bolts and chocks in an actual dolphin, and should be imagined as being due to pads of rubber attached to adjacent piles and working in shear.

Suppose such a spring has a shear flexibility of f, so that the relative vertical movement between piles is

$$\Delta_v = S\ f$$

The shear force acting on the spring between two piles is approximately the sum of the longitudinal forces acting on the piles either to the right or to the left of the spring. Hence we can modify the basic matrix equation (1a) to

$$\left[D + E\right] \left\{V\right\} = \left\{F\right\}$$

where E is a (3n x 3n) square matrix of form

+S	-S	-S	-S		-S
+S	+S	-S			
+S					
+S					S
0	0	0	0		0

in which the (3 x 3) sub-matrix S is

$$S = \begin{bmatrix} 0 & 0 & 0 \\ 0 & f/2 & 0 \\ 0 & 0 & 0 \end{bmatrix}$$

An example of the combined matrix $\left[D + E\right]$ is given in Table 3.9.

4. Calculations of Load Distribution in a Typical Dolphin

The matrix methods outlined above were applied to the analysis of the 4-pile dolphin described earlier in this section and shown in Figure 3.17. The calculations have been made not, of course, as an example of a typical design calculation, but so that the results might help designers to visualize more easily the distribution of loads in a timber pile cluster dolphin and to have some idea of the effect of tightening or loosening the top connections.

The results of the first calculations are shown in Figures 3.20 and 3.21, when the effect is found of a horizontal load applied at the top of a dolphin whose piles are assumed to be coincident at the top. It can be seen that whether the top is assumed to be hinged or not makes little difference to the load distribution. Almost all the load is taken by axial forces in the piles. The energy absorption per kip applied load is very low. The pertinent matrices are given in Tables 3.6 and 3.7.

The more realistic case of a fixed top pile cluster in which the piles were not assumed to be coincident was then calculated. The resulting load distribution is shown in Figure 3.22. It can be seen that the axial loads on the outer piles are now much less than in the previous case and the lateral loads and moments in the piles are greater. The outer piles take about three times the axial loads of

the inner; but lateral loads and moments are equally distributed between the piles. The maximum axial load is 3.53 kips, and so assuming a limiting pull-out force of 80 kips, the maximum horizontal force which could be carried by the dolphin would be 22.6 kips, and the energy absorbed would be 8.06 ft.kips.

For comparison, the effect of 1 kip lateral load evenly distributed over four unconnected piles is shown in Figure 3.23. The energy absorbed per kip is very high, but their strength is low.

It was next decided to investigate the effect of flexibility in the head of the dolphin due to working of the fastenings or to the insertion of rubber shear pads. A range of six flexibilities was taken, namely: .0005, .001, .005, .01, .02, and .03 ft/kip, and it was assumed that the shear springs between all the piles had equal flexibilities. An example of one of the matrices which had to be inverted is shown in Table 3.9, and the resulting force distributions and movements are tabulated in Table 3.10. In Figure 3.25, the deflection of the structure for a 1-kip load is plotted against flexibility, and both increase together as would be expected. The axial and lateral loads and the moment acting on one of the outer piles is plotted in Figure 3.24. The shapes of these curves again are what would be expected. With increasing flexibility, P will tend to a limiting value of 0.25 and the other two curves will go to zero.

The most interesting result is shown in Figure 3.26, in which the maximum load a dolphin will stand is plotted against the flexibility. It can be seen that for certain values of pile pull-out resistance R_{max} and lateral resistance P_{max}, the maximum load a dolphin can withstand actually increases by making the top slightly flexible; and its energy absorption capacity is also increased as can be seen from Figure 3.27. For instance, if the piles have a pull-out resistance of 40 kips and a lateral resistance of 2 kips each, then a flexibility of 0.0145 ft/kip raises the maximum load to 14.5 kips compared with 12.4 kips for a rigid head -- an increase of 17%. The energy absorption at maximum load is 6.2 ft.kips for a rigid head, which is increased to 58 ft.kips by putting in a spring of flexibility 0.0145 ft/kip! On the other hand, for other values of permissible axial and lateral loads there is no advantage in making a flexible head connection. For example, if the pull-out force is 40 kips and the allowable lateral force on a pile is 1 kip, then the two relevant lines do not cross at all in Figure 3.26, so that the maximum load cannot be reduced.

Figure 3.27 is a family of curves which plot values of maximum energy absorption for different design criteria against head flexibility. This figure shows how an increase of flexibility in a dolphin's head can sometimes very much increase the maximum energy absorption. Whether a dolphin

4-PILE DOLPHIN FIG. 3.20

Coincident Piles Hinged at Top

Loads in ft. kip units

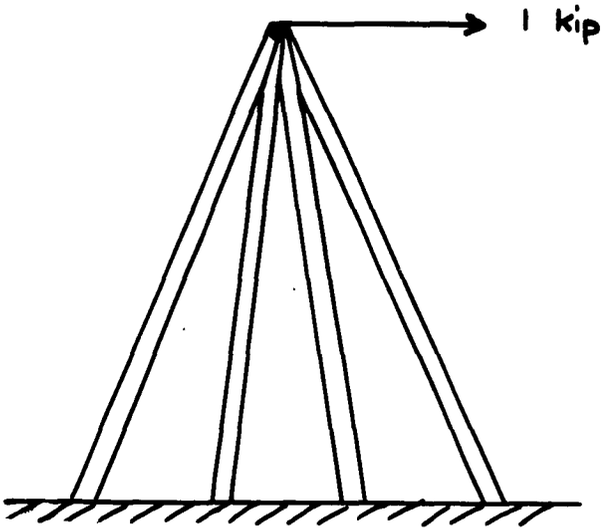

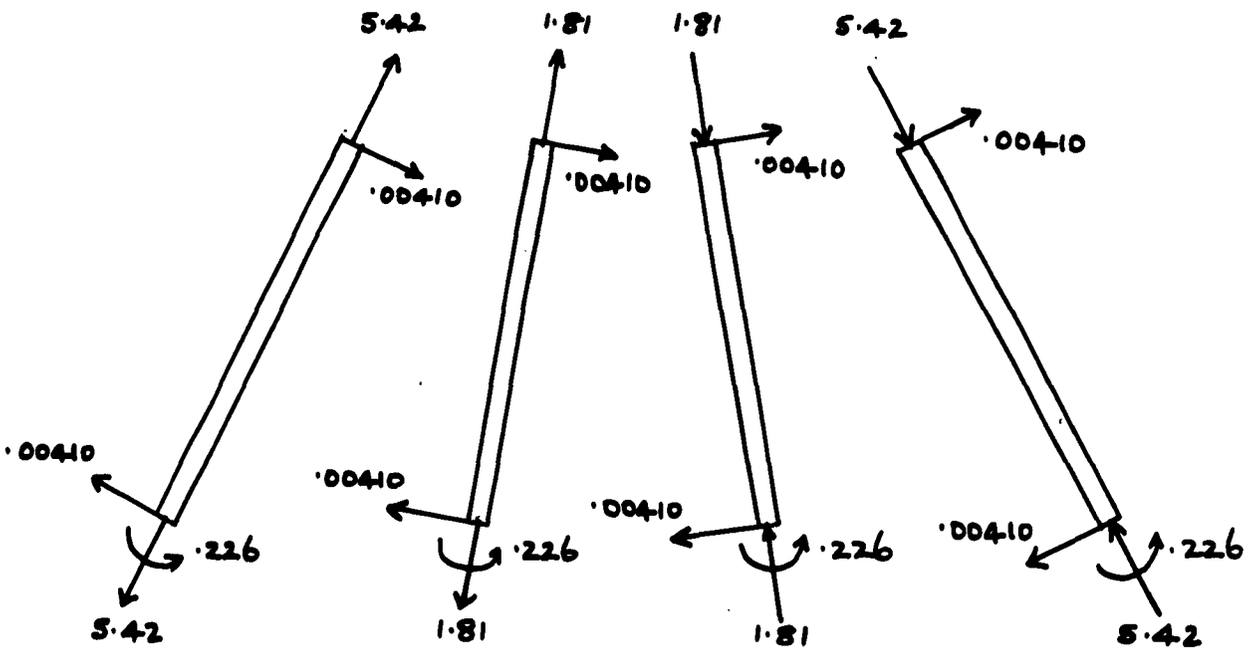

Shear between piles:	5.42	7.23	5.42

Horizontal deflection at top: 0.0270 ft/kip

Energy per kip: 0.0135 ft.kip/kip

4-PILE DOLPHIN FIG. 3.21

Coincident Piles Rigidly Fixed at Top

Loads in ft. kip units

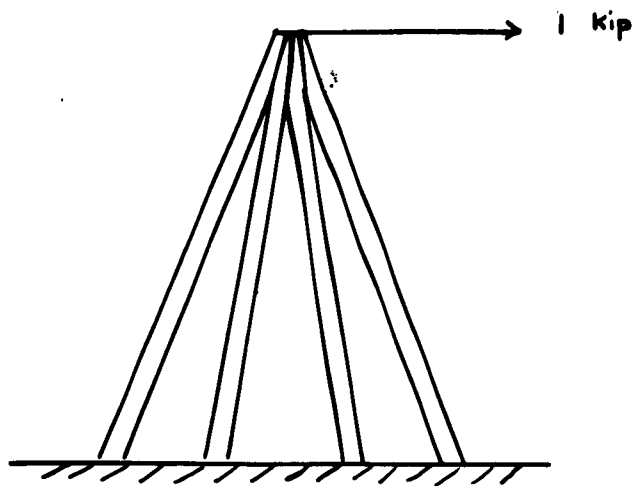

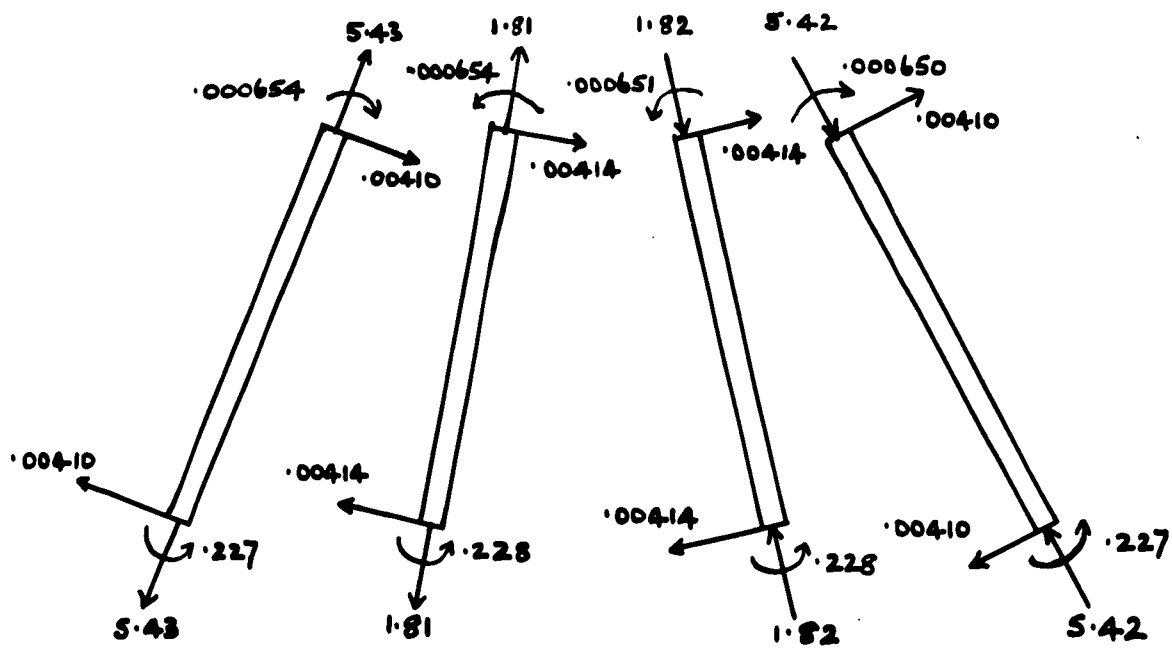

Shear between piles:	5.42	7.23	5.42

Horizontal deflection at top: 0.0270 ft/kip

Energy per kip: 0.0135 ft.kip/kip

4-PILE DOLPHIN FIG. 3.22

Non-Coincident Piles Rigidly Fixed at Top

Loads in ft. kip units

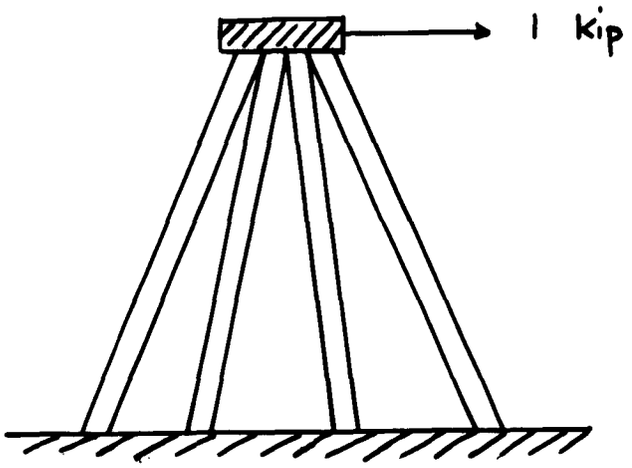

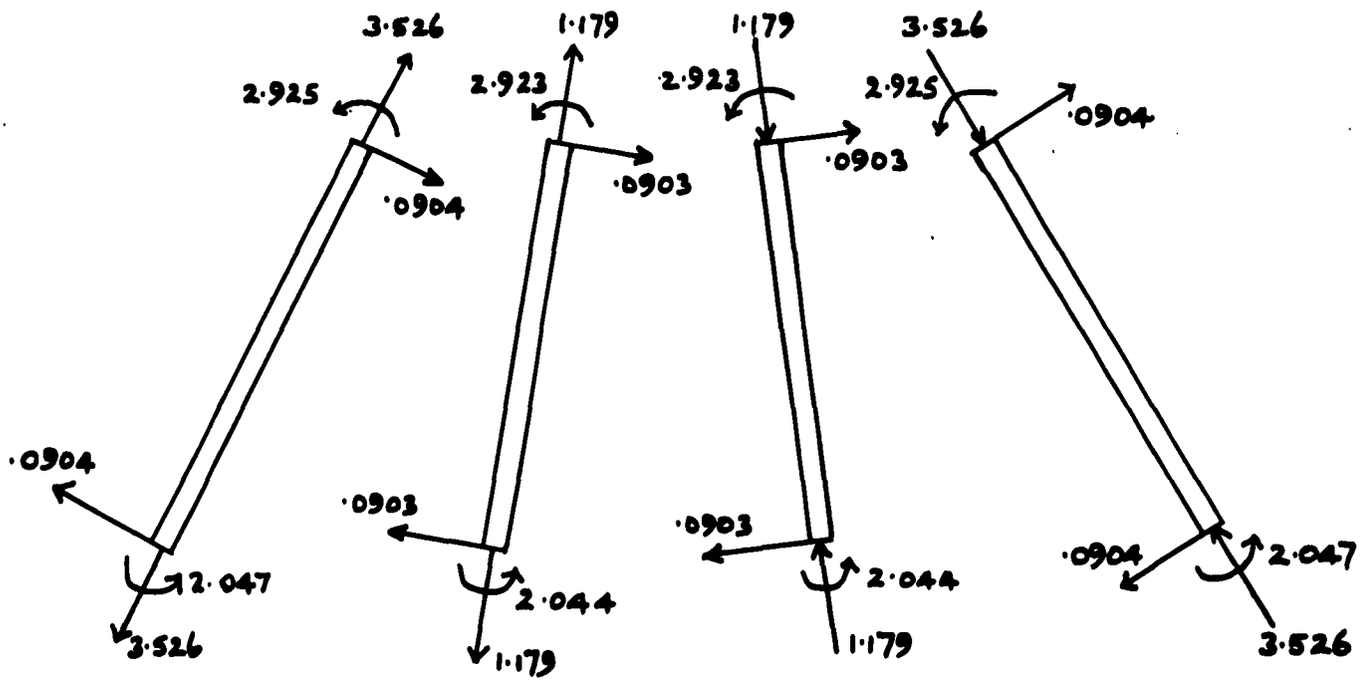

Shear between piles:	3.526	4.705	3.526
Horizontal deflection at the top:	0.07118 ft/kip		
Energy per kip:	0.0356 ft.kip/kip		

4-PILE DOLPHIN FIG. 3.23

Piles Unconnected at Their Heads

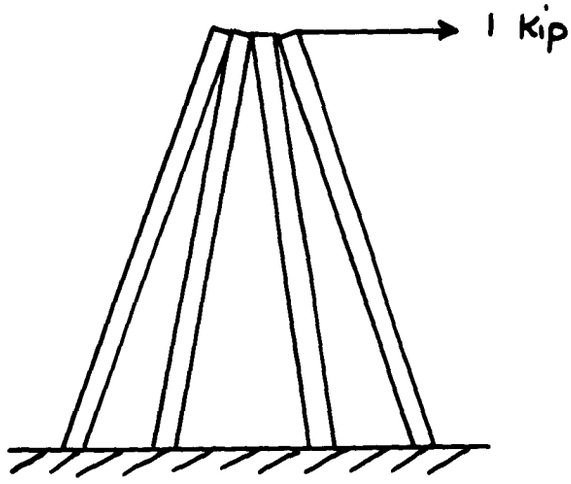

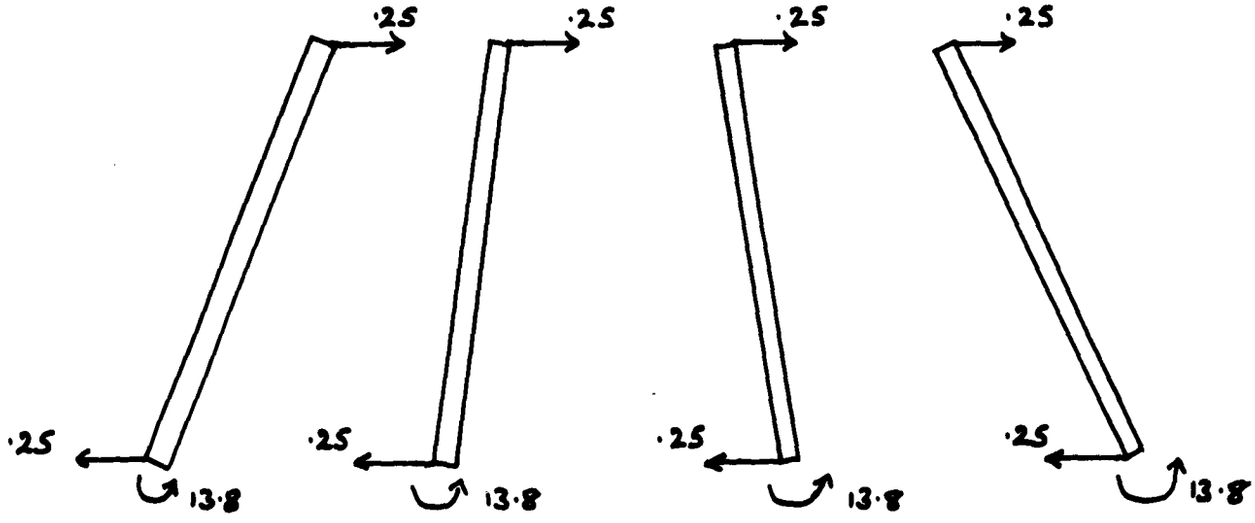

Horizontal deflection at the top: 1.6 ft.

Energy per kip: 0.8 ft.kip/kip

1

DA

D-MATRIX

+6.52818	+.000038477	+.177407	-6.54756	-.000010688	-.177934	0
+.534126	-.000404648	+.0145152	-.178573	+.000406849	-.00486281	0
+.178	0	+.00650	-.178	0	-.00660	0
0	0	0	+6.54756	+.000010688	+.177934	-6.547
0	0	0	+.178573	-.000406849	+.00486281	+.1785
0	0	0	+.178	0	+.00650	-.171
0	0	0	0	0	0	+6.547
0	0	0	0	0	0	-.1785
0	0	0	0	0	0	+.171
+.996669	+.081546	0	+.499627	+.027263	0	+.9996
+.081546	-.996669	0	+.027263	+.999627	0	-.0272
0	0	+1	0	0	+1	0

V-MATRIX (TRANSPOSED)

+.004097	+5.427	+.00065	+.004145	+1.812	-.00065	+.004

TABLE 3.6
D AND V MATRICES FOR RIGID-HEAD DOLPHIN METHOD (1)

.177934	0	0	0	0	0	0
.00485281	0	0	0	0	0	0
.00660	0	0	0	0	0	0
.177934	-6.54756	+.000010688	-.177934	0	0	0
.00485281	+.178573	+.000040549	+.00485281	0	0	0
.00650	-.178	0	-.0065	0	0	0
0	+6.54756	-.000010688	+.177934	-6.52818	+.00003477	-.177407
0	-.178573	-.000040549	-.00485281	+.534126	+.000404448	-.0146152
0	+.178	0	+.0065	-.178	0	-.0065
0	+.999627	-.027263	0	+.996669	-.081546	0
0	-.027263	-.999627	0	-.081546	-.996669	0
+1	0	0	+1	0	0	+1

2

.00065	+.004145	-1.812	-.00065	+.004097	-5.420	+.00065

TABLE 3.7

D AND V MATRICES FOR HINGED-
METHOD (i a)

D-MATRIX

+6·52818	+·000033107	−6·54756	−·0000110688	0	0	0	0
+·534126	−·000404648	−·178573	+·000405849	0	0	0	0
0	0	+6·54756	+·0000110688	−6·54756	+·0000110688	0	0
0	0	+·178573	−·000405849	+·178573	+·000405849	0	0
0	0	0	0	+6·54756	−·0000110688	−6·52818	+·000033107
0	0	0	0	−·178573	−·00405849	+·534126	+·000404648
+·996669	+·081546	+·999627	+·027263	+·999627	−·027263	+·996669	−·081546
+·081546	−·996669	+·027263	−·999627	−·027263	−·999627	−·081546	−·996669

V-MATRIX (TRANSPOSED)

+·004109	+5·424	+·004122	+1·8135	+·004122	−1·8135	+·004109	−5·424

TABLE 3.7

D AND V MATRICES FOR HINGED-HEAD DOLPHIN METHOD (i a)

-·0000110688	0	0	0	0
+·000405849	0	0	0	0
+·0000110688	-6·54756	+·0000110688	0	0
-·000405849	+·178573	+·000405849	0	0
0	+6·54756	-·0000110688	-6·52818	+·0000331077
0	-·178573	-·00405849	+·534126	+·000404648
+·027263	+·999627	-·027263	+·996669	-·081546
-·999627	-·027263	-·999627	-·081546	-·996669

ED)

+1·8135	+·004122	-1·8135	+·004109	-5·424

2

1

TAB
D- AND V-
METH

D-MATRIX

+6·52818	+·0000331077	+·177407	-6·54756	-·0000110688	-·177934	0	
+·71212600	-·000404648	+·02101520	-·178573	+·000405849	-·00485281	0	
+·178	0	+·00650	-·178	0	-·00650	0	
0	0	0	+6·54756	+·0000110688	+·177934	-6·54756	+·00
0	0	0	+·356673	-·000405849	+·0113528	+·178573	+·00
0	0	0	+·178	0	+·00650	-·178	
0	0	0	0	0	0	+6·54756	-·00
0	0	0	0	0	0	-·000573	-·00
0	0	0	0	0	0	+·178	
+·996669	+·081546	0	+·999627	+·027263	0	+·999627	-·02
+·0815460	-·996669	0	+·027263	-·999627	0	-·027263	-·99
-·244638	+2·990007	+1	-·054526	+1·99925	+1	+·027263	+·99

V-MATRIX (TRANSPOSED)

+·09037	+3·5258	-2·9248	+·09031	+1·1791	-2·9231	+·09031	-1·1

TABLE 3.8

D- AND V-MATRICES — RIGID HEAD DOLPHIN METHOD (ii)

-·177934	0	0	0	0	0	0
-·00485281	0	0	0	0	0	0
-·00650	0	0	0	0	0	0
+·177934	-6·54756	+·0000110688	-·177934	0	0	0
+·0113528	+·178573	+·00405849	+·00485281	0	0	0
+·00650	-·178	0	-·0065	0	0	0
0	+6·54756	-·0000110688	+·177934	-6·52818	+·000033107	-·177407
0	-·000573	-·00405849	+·00164719	+·534126	+·00040648	-·0145152
0	+·178	0	+·0065	-·178	0	-·0065
0	+·999627	-·027263	0	+·996669	-·081546	0
0	-·027263	-·999627	0	-·081546	-·996669	0
+1	+·027263	+·999627	+1	0	0	+1

-2·9231	+·09031	-1·1790	-2·9230	+·09037	-3·5258	-2·9248

1

TABL

[E + D]

FOR SPRUNG, R

+6·52818	+·0000331077	+·177407	−6·54756	−·0000110688	−·177934	0	0
+·712126	−·000654648	+·0210152	−·178573	+·000655849	−·00485281	0	+·0002
+·178	0	+·00650	−·178	0	−·00650	0	0
0	0	0	+6·54756	+·0000110688	+·177934	−6·54756	+·000011
0	−·00025	0	+·356573	−·000655849	+·0113528	+·178573	+·000655
0	0	0	+·178	0	+·00650	−·178	0
0	0	0	0	0	0	+6·54756	−·000011
0	−·00025	0	0	−·00025	0	−·000573	−·00065
0	0	0	0	0	0	+·178	0
+·996669	+·081546	0	+·999627	+·027263	0	+·999627	−·0272
+·081546	−·996669	0	+·027263	−·999627	0	−·027263	−·9996
−·244638	+2·990007	+1	−·054526	+1·99925	+1	+·027263	+·9996

2

TABLE 3.9

[E+D] MATRIX

FOR SPRUNG, RIGID-HEAD DOLPHIN

110688	-·177934	0	0	0	0	0	0
5849	-·00485281	0	+·00025	0	0	+·00025	0
	-·00650	0	0	0	0	0	0
10688	+·177934	-6·54756	+·0000110688	-·177934	0	0	0
849	+·0113528	+·178573	+·000655849	+·00485281	0	+·00025	0
	+·00650	-·178	0	-·00650	0	0	0
	0	+6·54756	-·0000110688	+·177934	-6·52818	+·000023107	-·177407
5	0	-·000573	-·000655849	+·00164719	+·534126	+·000654648	-·0145152
	0	+·178	0	+·00650	-·178	0	-·00650
3	0	+·999627	-·027263	0	+·996669	-·081546	0
7	0	-·027263	-·999627	0	-·081546	-·996669	0
5	+1	+·027263	+·999627	+1	0	0	+1

PILE
PILE

CASE	FLEXIBILITY	PILE 1			PILE 2		
		P	R	M	P	R	M
0	0	·09037	3·526	−2·925	·09031	1·1791	−2·923
1	·0005	·09273	3·579	−2·882	·09263	·8486	−2·880
2	·001	·09501	3·587	−2·841	·09487	·6589	−2·838
3	·005	·1110	3·345	−2·553	·1106	·2192	−2·542
4	·01	·1270	2·996	−2·267	·1263	·1088	−2·248
5	·02	·1500	2·457	−1·854	·1489	·0472	−1·823
6	·03	·1659	2·079	−1·569	·1645	·0272	−1·531
HORIZONTAL MOVEMENT COEF.		6·528	·000033	·1774			

1

TABLE 3.10

PILE CLUSTER DOLPHIN WITH VARYING SHEAR FLEXIBILITY
PILE LOADS AND MOVEMENTS

PILE								HORIZONTAL MOVEMENT PER KIP (ft)
		3			4			
R	M	P	R	M	P	R	M	
91	-2·923	·09031	-1·1790	-2·923	·09037	-3·526	-2·925	·0711
86	-2·880	·09263	-·8486	-2·880	·09273	-3·579	-2·882	·0941
89	-2·838	·09487	-·6589	-2·838	·09501	-3·587	-2·841	·1163
92	-2·542	·1106	-·2192	-2·542	·1110	-3·345	-2·553	·2718
88	-2·248	·1263	-·1088	-2·248	·1270	-2·996	-2·267	·4270
72	-1·823	·1489	-·0472	-1·823	·1500	-2·457	-1·854	·6504
72	-1·531	·1645	-·0272	-1·513	·1659	-2·079	-1·568	·8048

2

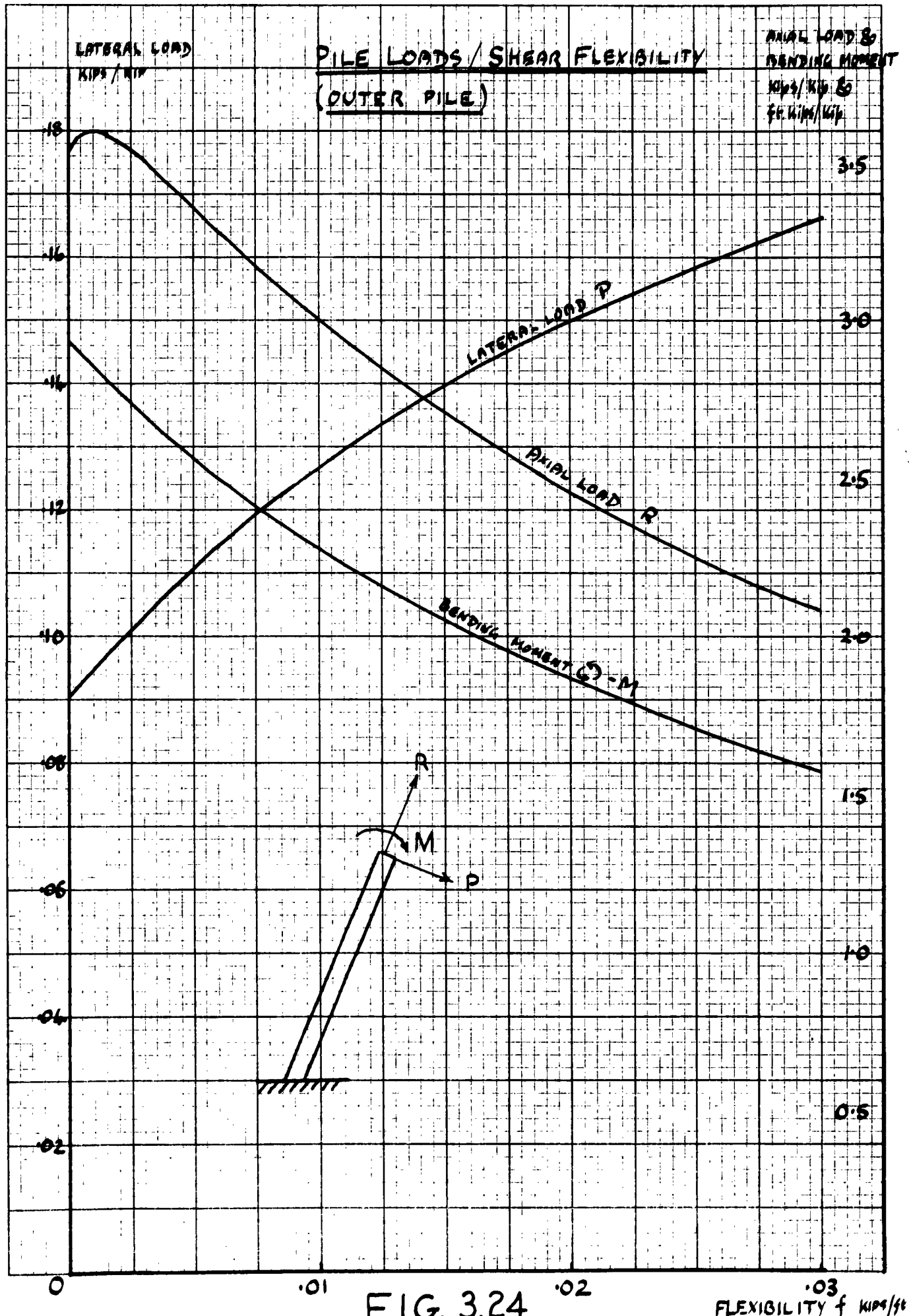
PILE LOADS / SHEAR FLEXIBILITY
(OUTER PILE)
LATERAL LOAD
KIPS / KIP
AXIAL LOAD &
BENDING MOMENT
KIPS / KIP &
FT. KIPS / KIP
LATERAL LOAD P
AXIAL LOAD P
BENDING MOMENT (↺) - M
P
M
P
·18
·16
·14
·12
·10
·08
·06
·04
·02
0
·01
·02
·03
3·5
3·0
2·5
2·0
1·5
1·0
0·5
FLEXIBILITY f KIPS/ft

FIG. 3.24

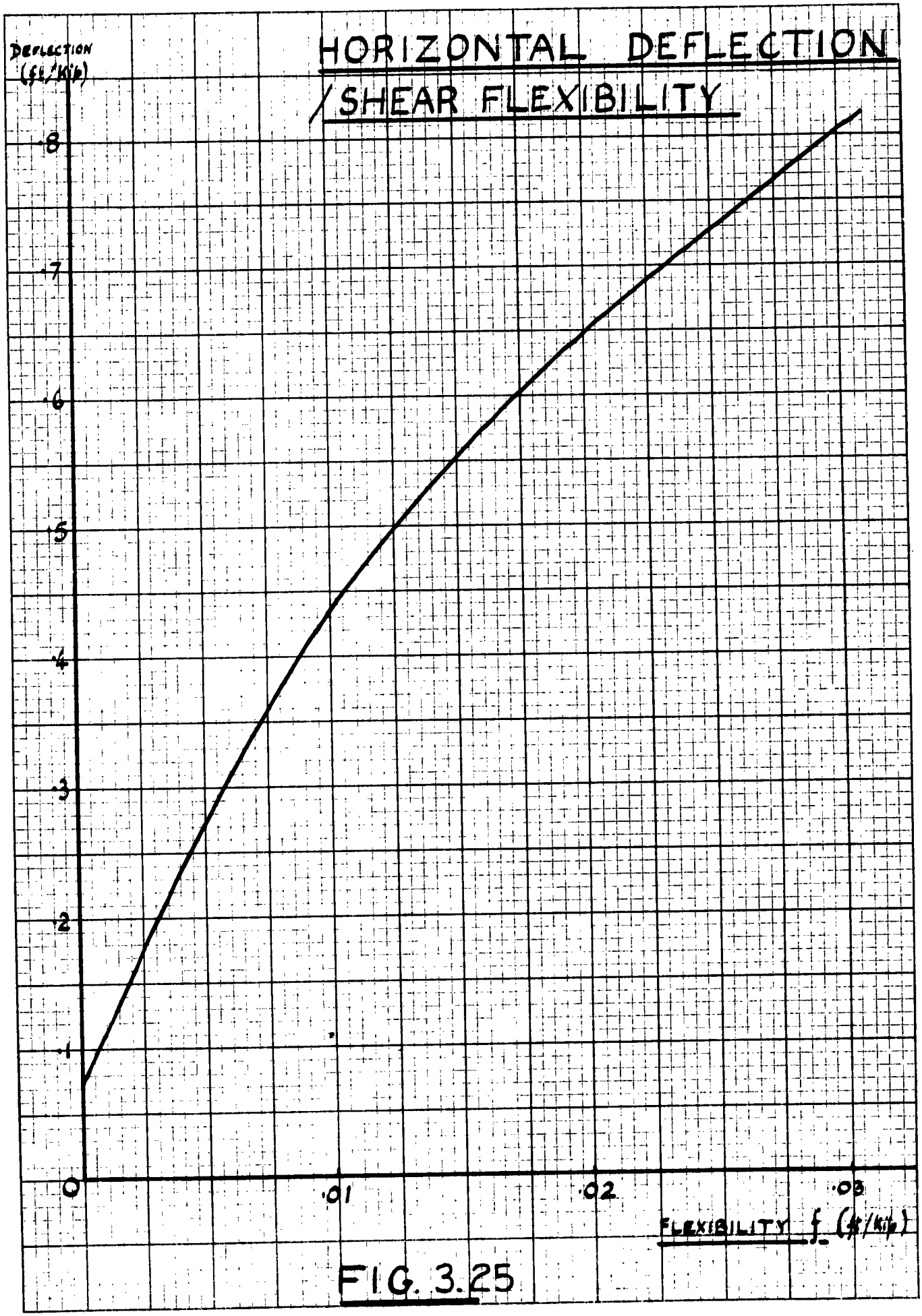

FIG. 3.25

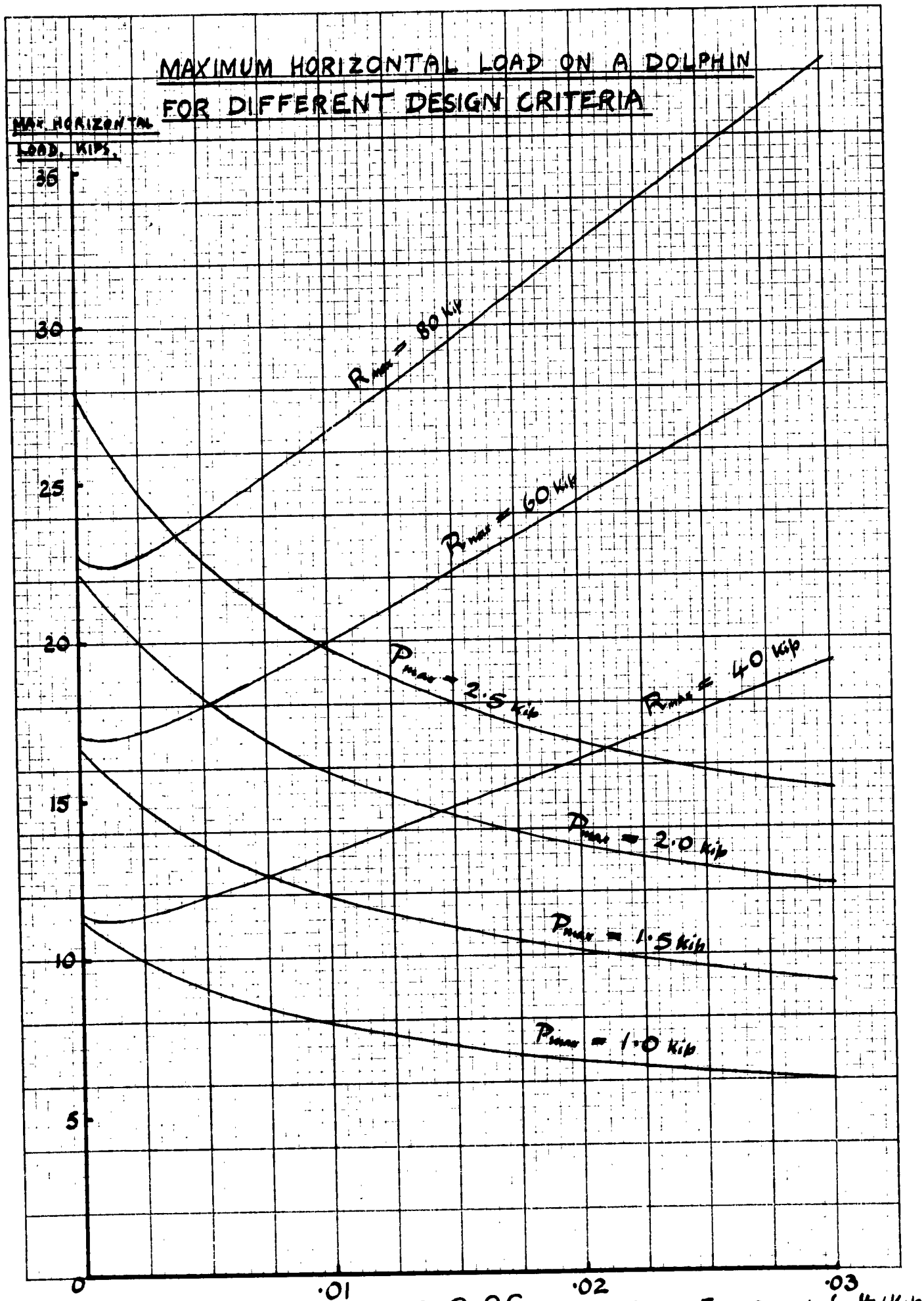

FIG. 3.26

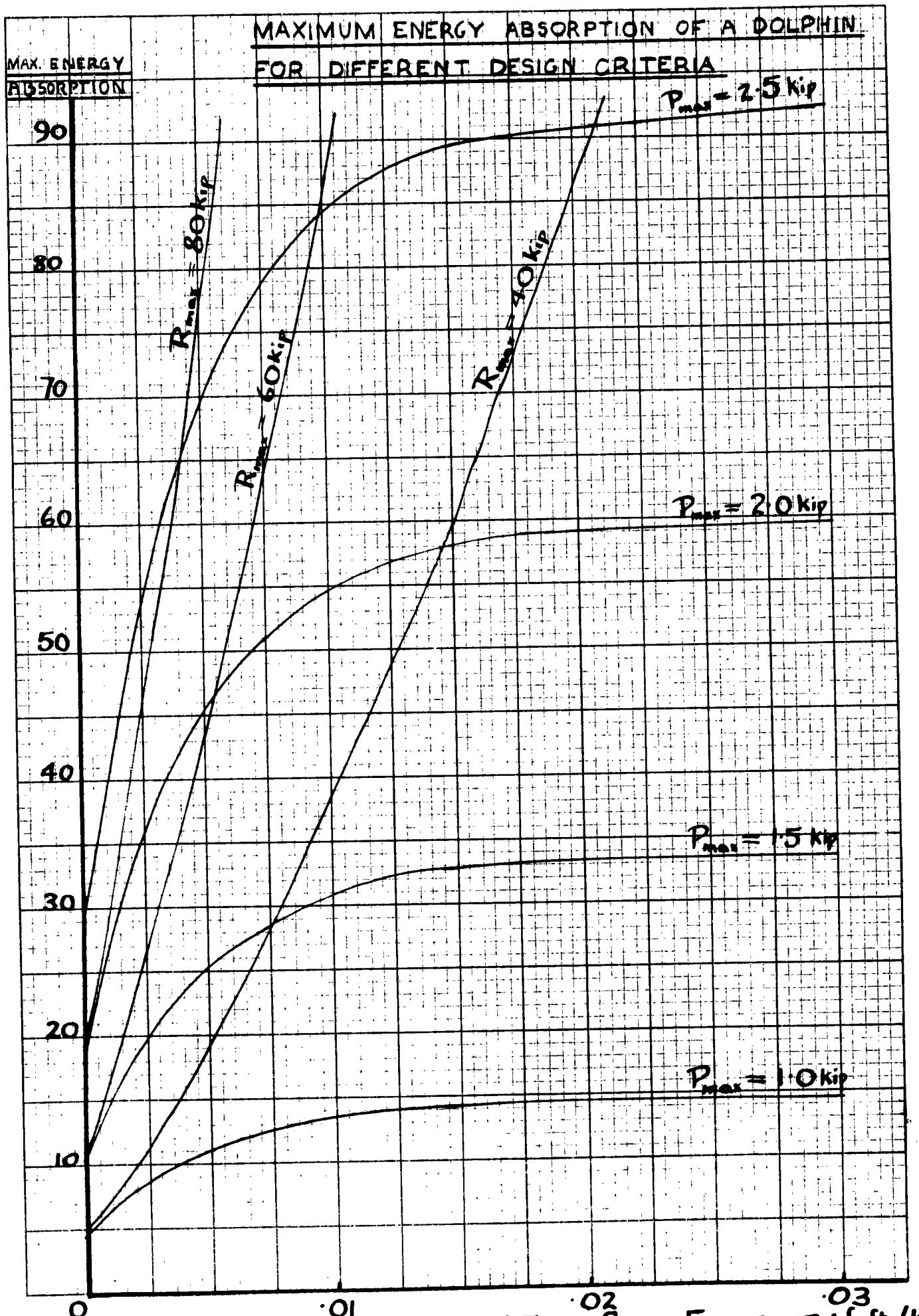

FIG. 3.27

is designed for maximum strength or for maximum energy absorption depends on the locations and intended use of the dolphin.

5. Buckling of a Pile in Compression

The piles used in timber dolphin construction generally have a large l/d ratio, and so should be checked against buckling.

Assuming the pile is fixed at the ends, the critical buckling force is

$$P_{crit} = \frac{4\pi^2 EI}{l^2}$$

Hence for the dolphin under consideration with an effective pile length of 55 ft. and a diameter of 1 ft., we have

$$P_{crit} = \frac{4\pi^2 \times 8.66 \times 10^3}{55^2} = 111 \text{ kips}$$

If however the pile is assumed to be hinged at the top, its critical buckling force is

$$P = \frac{20.19\ EI}{l^2} = \frac{20.19 \times 8.46 \times 10^3}{55^2} = 59.2 \text{ kips}$$

If we assume a maximum pull-out force on the tension piles of 40 kips, the compression piles will evidently not fail by buckling; but if a value of 80 kips is taken, buckling might occur and this might be the mode of failure of the dolphin.

6. Conclusion

Timber pile cluster dolphins have been built and used satisfactorily for many years. To try to improve the design of such dolphins it is thought a designer should

(i) Consider some sort of superstructure on the dolphin so that the blow from a ship is transmitted to all piles simultaneously;

(ii) Consider whether designing a dolphin with some flexibility in its head would in fact increase both the strength and the energy absorption of the structure.

D. Screw Pile Dolphins

When dolphins have to be built on such poor soil that normal piles would have to be driven to an excessive length to carry the load required, it might be simpler and more economical to use screw piles.

A screw pile is a steel or concrete pile with two large diameter helical blades at the lower end. Not only do the blades provide a large bearing surface for the pile, but they also serve to pull the pile into the ground when the top of the pile is rotated. Screw piles have been used for about 100 years with much success. Their principal use has been in maritime structures where soil conditions have been poor; but recent developments in the construction, handling and driving procedures of screw piles have led to their being used in wider applications.

Screw pile dolphins have been used successfully in severe conditions. The dolphin shown in Figure 3.29 was built by Messrs. Braithwaite in the Thames estuary to deal with vessels of 12,000 to 15,000 tons. There is a tidal range of about 20 ft. and a strong current runs. The vertical screw piles are connected to the comparatively light upper structure by collars C. Lateral loads are resisted by raked piles B. One disadvantage of this design would seem to be that cross bracing is required under water and in the splash zone: yet it has been reported that such

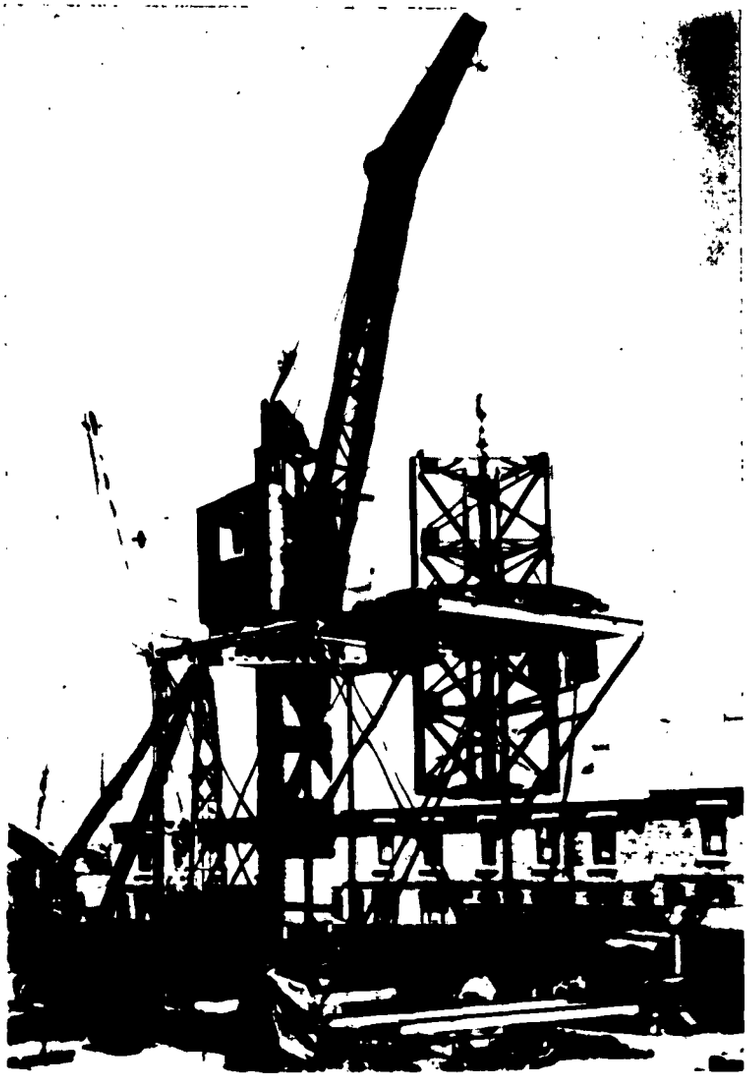

LATEST DESIGN OF SCREWING MACHINE

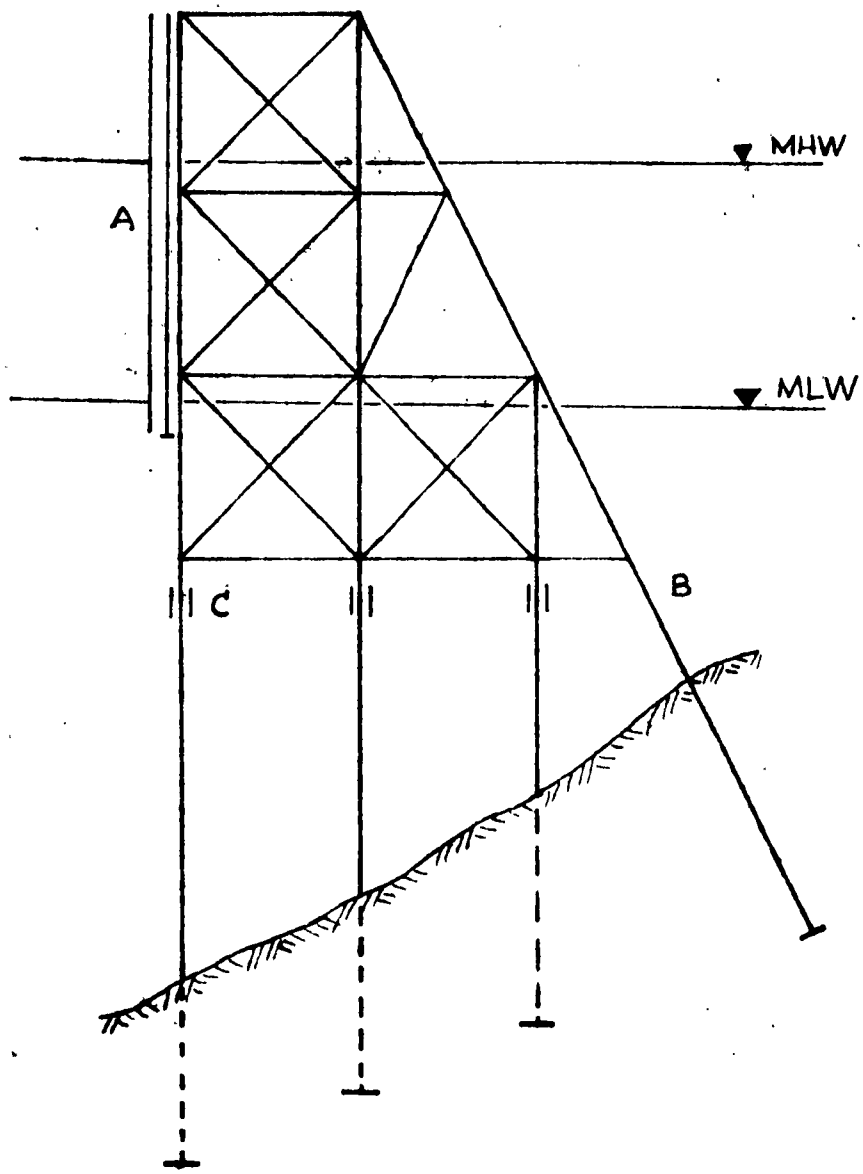

SCREW PILE DOLPHIN

FIGURE 3.29

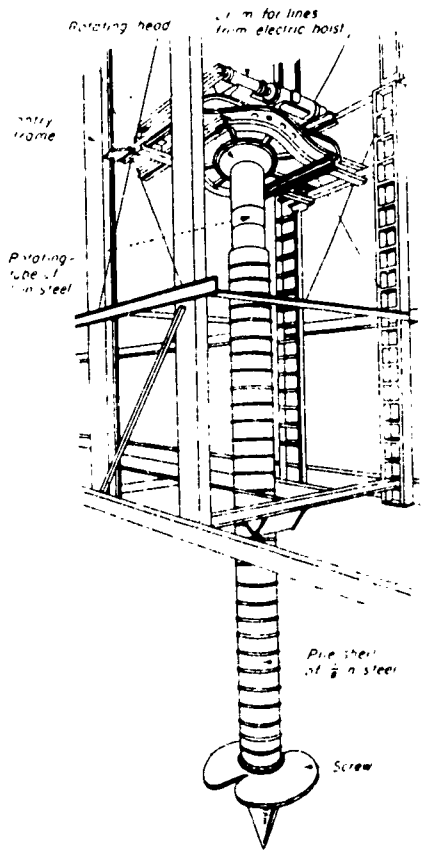

Screw pile mounted in the gantry frame that was used for installation. After screwing the point to proper penetration, the rotating tube was removed and the shell filled with reinforced concrete.

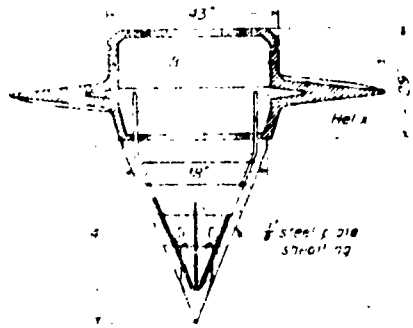

Detail of pile tip and screw. As assembled in this manner the unit weighed about 2 tons.

dolphins "give efficient service and are speedily erected." For further information see Minikin's book, Ref. 43, p. 201.

Screw piles used for dolphin construction have various advantages and disadvantages compared with conventional piles. Advantages are:

(1) In poor soil, because the screw pile derives its load-carrying capacity from the large bearing area of its blades, it can carry much larger loads than a conventional pile which depends on friction for its bearing capacity.

(2) The screw pile has a very much greater pull-out strength than conventional piling, because for the pile to move, a cone of soil extending upwards from the screw would have to be lifted. This is of great importance in dolphin design.

(3) Screw piles are made of steel or, in recent years, more often of reinforced concrete. They are thus more easy to protect against deterioration than timber piles

(4) Driving and handling equipment is self-contained and is not as heavy as that needed for conventional pile driving.

(5) Screw piles are driven in short lengths which are spliced together, so that the piles are more easily transportable.

(6) Rapid driving is possible. Minikin (Ref. 42) says that a 4 ft. diameter blade with a 5 in. pitch has been driven through sand and clay at the rate of 10 ft. per hour and through soft chalk at 4 ft. per hour.

The principal disadvantages of screw piles are:

(1) Cost. The cost of the helix is fairly high and there must therefore be considerable economy of penetration as compared with normal piling. However, costs have been brought down by the design of more efficient screwing machines and piles; and Minikin (Ref. 42) states that "... for light constructions on sand and silty sand, particularly on foreshores, this method is found to be quick and cheap."

(2) The soil must not be such that any serious obstructions are liable to be encountered at or above the founding level.

(3) Due to the method of driving, clay above and around the helix will be remoulded. This would be a disadvantage when driving through soils sensitive to remoulding.

(4) It is not always easy to position the pile accurately when driving into sloping ground -- the pile foot sometimes shows a tendency to 'walk' along the surface.

(5) This type of pile is supported by its blades and so its effective length as a column is greater than that of a bearing pile of equal diameter. Hence screw pile structures often have to be braced under water against buckling, a costly and difficult operation. For this reason, modern screw piles often have a large diameter shaft.

1. Design Procedure for Screw Piles

In the past, the bearing capacity for screw piles has sometimes been calculated using Rankine's formula for passive resistance. However, in the light of modern knowledge, and recommendations by both Terzaghi and Tschebotarioff (Ref. 74, p. 239), the reader is advised not to use this formula.

The following method for the bearing and pull-out capacity of a screw pile in clay soils is due to a paper by Wilson and a discussion of it by Skempton (Ref. 90).

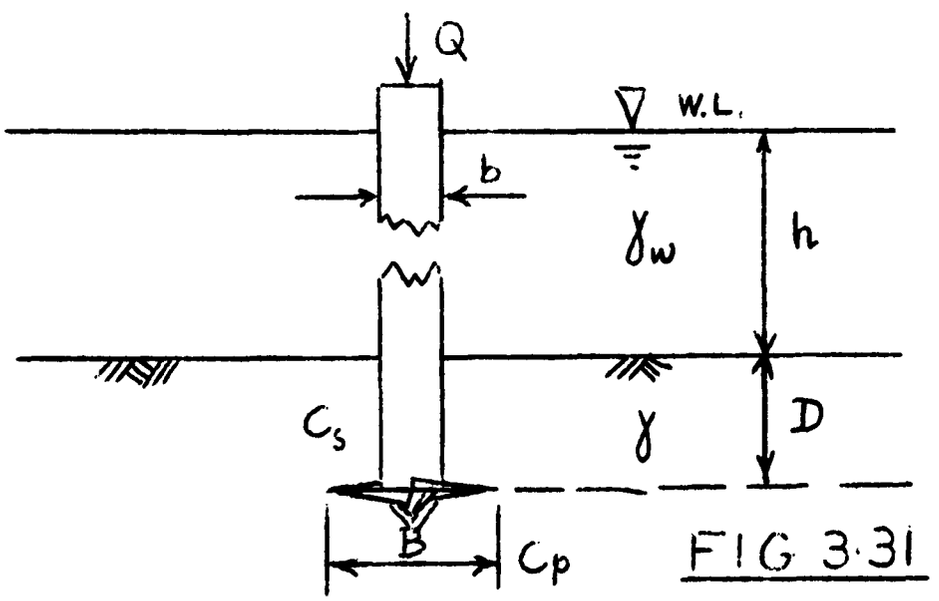

FIG 3.31

The ultimate load a pile can carry (including its own weight) is

$$Q = Q_b + P_o + Q_s$$

where

Q_b = bearing load carried by screw and point of pile

Q_s = side friction on pile

P_o = weight of soil and water displaced by pile.

If C_{bi} is the undisturbed shear strength of the clay beneath the screw,

$$Q_b = 9\ C_{bi}\ \frac{\pi}{4}\ B^2$$

If C_s is the average shear strength of the clay adjacent to the shaft, assuming no skin friction is mobilized above the blade for a distance equal to its diameter to allow for remoulding, then

$$Q_s = C_s\ \pi\ b\ (D - B)$$

The value C_s must be modified as the material next to the blad will have been almost fully remoulded during the driving of the pile. Hence

$$C_s = C''_r$$

where C''_r is the average remoulded shear strength of the clay. Also,

$$P_o = (\gamma_w h + \gamma D) \frac{\pi}{4} b^2$$

$$Q = 9\, C_{bi} \frac{\pi}{4} B^2 + C''_r \pi b(D - B)$$

$$+ (\gamma_w h + \gamma D) \frac{\pi}{4} b^2 \qquad (1)$$

Some test results have shown that this formula gives bearing loads which are some 9 to 15% too high.

It is recommended in the design of dolphins using screw piles that the effect of skin friction on the piles should be neglected, i.e. that the middle term in Equation (1) above should be dropped.

The pull-out force R of a screw pile can similarly be taken as

$$R = 9\, C_{bi} \frac{\pi}{4} (B - b)^2 - (\gamma_w h + \gamma D) \frac{\pi}{4} b^2 \qquad (2)$$

Screw piles must not be loaded laterally, because they do not penetrate very deeply, because they are generally used in poor soil which would not be able to support lateral loads, and because they are usually made of reinforced concrete which must not be allowed to bend and form hair-cracks in a marine environment. Hence a dolphin intended for use with screw piles must be designed as a rigid structure in which all the piles are axially loaded. This means that a flexible fendering system must be used to give the dolphin adequate energy absorption capacity.

One of the most modern screw piles is the Screwcrete pile (Fig. 3.30), manufactured by Braithwaite & Co. of England. The helix of this type of pile may be made of reinforced concrete, iron or cast steel, depending on the soil in which it is to be driven. A corrugated mild steel casing 1/8" thick with a diameter of from 18" to 78" is welded to the helix, and a heavy steel mandrel is inserted in the casing and also attached to the helix. The top of the mandrel is twisted and the screw pulls itself into the ground. When the top of the casing has nearly reached water or ground level, an additional length is welded on and an extension is added to the mandrel. This procedure is repeated if necessary until the helix reaches foundation level. The mandrel is then withdrawn and a reinforcing cage and concrete are introduced into the casing in dry conditions.

When driving into sloping ground, it is advisable to grab a bucket or two full of soil first so that the foot of the pile can be positioned accurately and not 'walk' along the bottom.

The size of helix necessary varies with soil conditions. The maximum diameter so far used is 9'-6", though larger sizes could no doubt be designed if necessary. Messrs. Braithwaite say that a helix with 50 or 60 ft. of casing attached can be handled in one operation and screwed

15 ft. into the sea or river bed before adding a further 15 ft. of casing.

The screwing operation is continuous and only needs to be interrupted about every 15 ft. for the addition of a further length of casing and a further section of mandrel. This operation should be carried out as quickly as possible lest in some clay soils the screw should "freeze" and be difficult to restart.

Jetting is sometimes used to make driving easier.

Screwcrete cylinders are driven by a special machine such as that shown in Figure 3.28. The same plant also handles the piles and so is self-contained. Messrs. Braithwaite say that these plants "are available at short notice."

E. The Ring Pontoon Dolphin

This dolphin is an ingenious device invented by Mr. R. Pavry of the British consulting engineer firm, Posford, Pavry, & Partners. The only previously published information concerning the dolphin is included in Reference (62). Mr. Pavry has advised by correspondence that patents on the dolphin have been taken out in various countries.

1. Description

The ring pontoon dolphin consists of three main structural elements -- a hexagonal floating pontoon, a

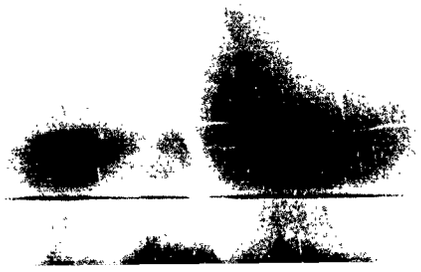

hollow buoyant shaft, and a base structure. The base structure rests on the harbor bottom, anchored by vertical piling. The lower end of the shaft has three protruding cantilever arms located 120° apart which engage loosely in and bear upward against three connection frames which form a part of the base structure. A collar, free to slip up and down the shaft, is attached to the pontoon by means of six radial trusses, thus the pontoon is allowed to adjust its position relative to the shaft with tidal variations. A single horizontal timber fender rigidly attached around the periphery of the pontoon protects it from damage. Figure 3.32 illustrates the dolphin assembly. Drawings of three ring dolphins are included in Appendix F. As a ship contacts the pontoon, the collar binds on the shaft, and the dolphin begins to heel over. Large buoyant forces come into play and a resisting moment is created about the hinge formed between one or two of the cantilever arms and their bearing frames as the remaining cantilever arm(arms) is(are) depressed. Because of its large resisting moment and its ability to deflect over relatively large distances, this dolphin has the capacity to absorb very large amounts of kinetic energy. Because of the relatively large deflection realized during absorption of the ship's kinetic energy, the thrust applied to the ship's hull is small compared to that experienced when equivalent energy is absorbed by elastic dolphins.

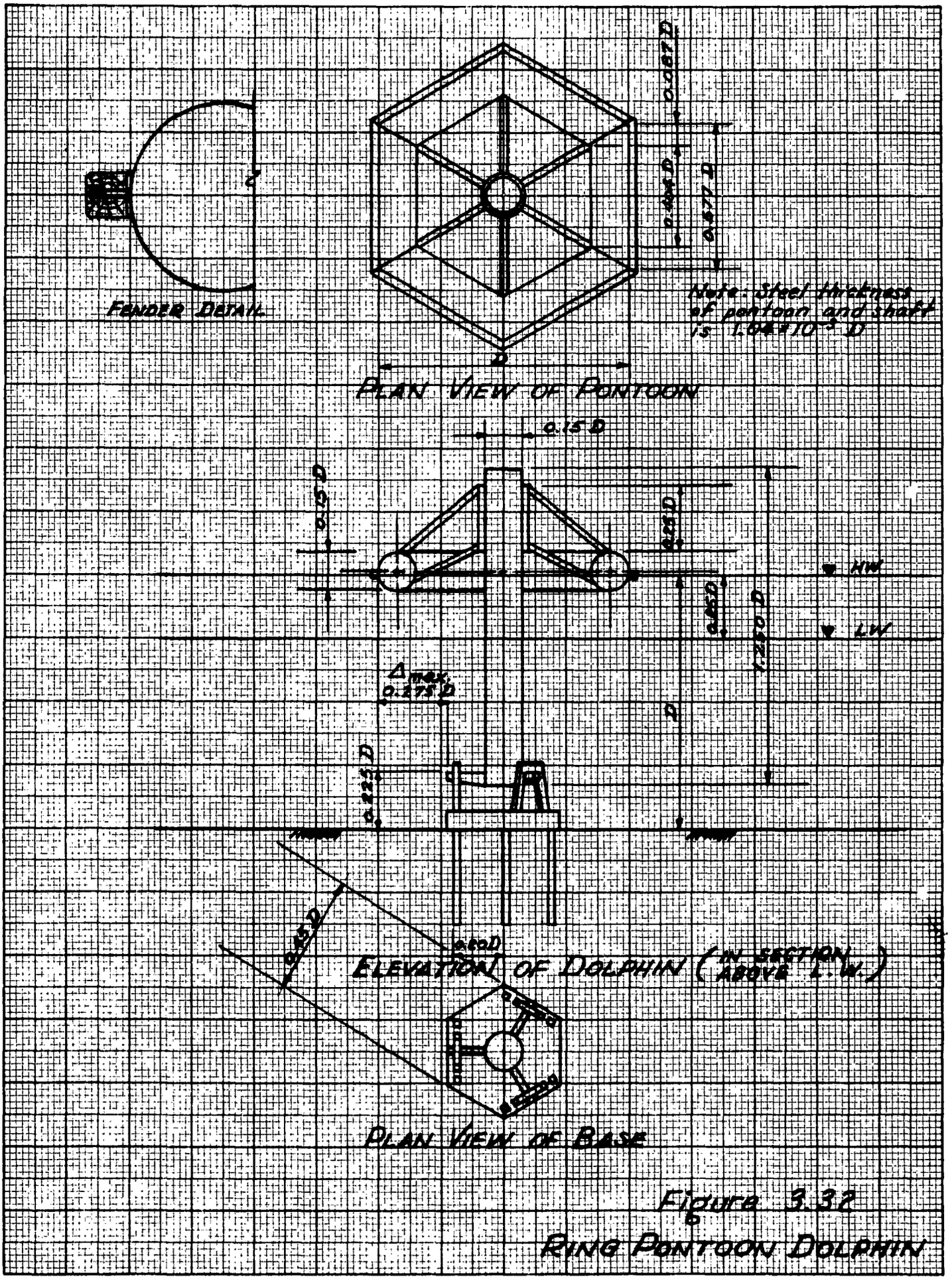

Figure 3.32

RING PONTOON DOLPHIN

Thus increased safety against damage to shipping is afforded. The pontoon is free to rotate under tangential forces, and will in normal use tend to orient itself so that contact with the ship is made over the entire length of one of the six pontoon cells. This property should prevent local damage due to overstressing the ship's hull plates.

2. Applications

This dolphin is intended for use as a berthing or protection dolphin where most advantage can be taken of its large kinetic energy absorption capacity. Drawings F-1 and F-2 of Appendix F illustrate use of the dolphin as a berthing device. Because two or more of the dolphins can safely satisfy the berthing requirements of very large vessels, the prime application of the ring pontoon dolphin appears to be in connection with the berthing of large tankers, precluding the necessity for extensive pier construction. Ring pontoon dolphins of proper proportions could be relied upon to safely absorb the impact of large vessels berthing in exposed locations, and may in part provide a solution to the difficult problem of receiving large deep-draft tankers at offshore petroleum handling facilities.

Because the pontoon structure is free to rotate about the central shaft, the dolphin is little affected by eccentric loads and may be used when significant tangential velocities are anticipated without danger of damage to its

structure or foundation. Free vertical movement of the pontoon structure on the central shaft makes this dolphin applicable to locations where wide tidal variations occur.

Since relatively large deflections are characteristic of this dolphin, it is not applicable for use in confined locations where horizontal movement must be limited to a few inches.

3. Past Performance

At the time of this writing, a ring pontoon dolphin has not yet been constructed. The National Physical Laboratory, Teddington, Middlesex, U.K., conducted a model study of the dolphin at 1:40 scale for the firm of Posford, Pavry, & Partners. The results of the study are included in Appendix D. Briefly, the model study bore out the theoretical conclusions with regard to the high energy absorption capacity of the dolphin.

4. Design

Design of a dolphin of this type to suit the requirements of a particular case is largely a trial and error procedure. Because the energy absorption characteristics are dependent upon the proportions of the dolphin and the water depth, load and energy absorption vs. deflection curves must be computed for dolphins of various proportions until a solution is reached which satisfies the

requirements of the particular case. Computation of the necessary curves is a simple but tedious process, and can be accomplished as follows:

(a) Select trial dimensions.

(b) Determine the draft of the pontoon in still water without horizontal load.

(c) Draw the dolphin to scale in the vertical and deflected positions, using deflection increments of about two feet.

(d) Compute buoyant forces of the shaft and each of the six pontoon cells in each position of rotation.

(e) Scaling moment arms, compute the buoyant moments of the shaft and cells for each position.

(f) Scaling moment arms, compute the shaft and pontoon weight moments for each position.

(g) Scale moment arms for the horizontal overturning force.

(h) Determine horizontal overturning forces statically by taking the sum of moments for each position.

(i) Plot load vs. deflection and energy absorption vs. deflection curves. Energy absorbed is computed as the area beneath the load vs. deflection curve.

Since the resisting moment of a given dolphin varies with the state of the tide and the direction of ship approach (and therefore the location of the hinge about which tilting occurs), trial solutions should be based on the minimum resisting moment condition. That condition occurs at high tide when the ship approach direction is such as to cause tilting about the hinge point located nearest the central vertical axis through the dolphin. To achieve safety against the possibility of a deep-draft ship colliding with the base structure, a liberal safety factor dependent upon local conditions should be applied to the energy absorption requirement.

Once satisfactory proportions of the dolphin have been determined, an analysis must be undertaken to assure that the moments induced about the collar are sufficient to cause the collar to bind on the shaft. The most critical condition for collar slip occurs at maximum deflection under the minimum resisting moment condition. The sum of moments about the collar can be changed by varying the vertical location of the collar relative to the pontoon.

In order to proceed with structural design of the dolphin, it is necessary to determine maximum load conditions for each structural element. For equivalent energy absorption, maximum loads for all structural elements occur under the maximum resisting moment condition of tide and

ship approach direction. That condition occurs at low tide when the ship approaches from a direction which causes tilting about the hinge located at maximum distance from the dolphin's central vertical axis. Steps (c) through (i) outlined above must therefore be repeated to calculate maximum structural design loads.

A general analysis based upon the procedure outlined above has been undertaken and is presented to serve as a guide in selecting proper dolphin proportions and performing the necessary calculations. Because the water depth in a harbor or channel is related to the maximum displacement vessel which may strike the dolphin, it seems reasonable to proportion the dolphin in terms of water depth in order to reach a solution which may be applied to the general case. A number of trial solutions have shown that a dolphin proportioned according to Figure 3.32 yields reasonable energy absorption characteristics. The following analysis is based upon the relative dimensions shown in the Figure. Symbols used in the analysis are explained in Table 3.11.

<u>Determine pontoon draft in still water</u>:

Weight of six pontoon cells	=	$7.1 \times 10^{-4}\ D^3$ kips
Estimated truss weight	=	$1.3 \times 10^{-4}\ D^3$ kips
Estimated fender weight	=	$4.0 \times 10^{-4}\ D^3$ kips
W_p	=	$12.4 \times 10^{-4}\ D^3$ kips

TABLE 3.11

Symbols Used in Ring Pontoon Dolphin Analysis

A - submerged area in a normal plane passing through the centroid of any cell

c - indicates location of central normal plane through cell

C_G - center of gravity

D - depth of water at high tide

F_{b1}, F_{b2}, etc. - buoyant force of a particular cell

F_{bc} - buoyant force of any cell

F_{bp} - buoyant force of pontoon (sum of F_{b1} through F_{b6})

F_{bs} - buoyant force of shaft

F_f - force due to friction

g - acceleration of gravity

HW - high water level

LW - low water level

M_{bc} - moment due to buoyancy of any cell

M_{bp} - moment due to buoyancy of pontoon (M_{bc})

M_{bs} - moment due to buoyancy of shaft

M_{wp} - moment due to weight of pontoon structure

M_{ws} - moment due to weight of shaft

N - normal force

P - horizontal overturning force

U - energy absorbed

v - ship approach velocity

W - displacement of ship

W_p - weight of pontoon structure

W_s - weight of shaft

y - moment arm of force P about hinge point

Δ - deflection

θ - angle of tilt

I - condition of minimum resisting moment

II - condition of maximum resisting moment

For use in computing buoyant forces of the partially submerged pontoon, Figure 3.33 has been prepared to show the relationship between draft and submerged area in a vertical plane normal to any cell.

$$F_{bp} = 6(0.577\ D - .087\ D)A \times .064$$

$$F_{bp} = .188\ DA \text{ kips}$$

$$F_{bp} = W_p$$

$$.188\ DA = 12.4 \times 10^{-4}\ D^3$$

$$A = 66 \times 10^{-4}\ D^2$$

From Figure 3.33, draft = .06 D

Draw the dolphin to scale:

For the purpose of this analysis, large-scale drawings were made of the dolphin in vertical and deflected positions for minimum and maximum resisting moment conditions. Figure 3.34, drawn to a smaller scale, illustrates the method.

Compute forces and moments:

In order to compute buoyant forces of the cells, the submerged volume of each cell in the various tilted positions is taken as the product of the cell length and the submerged area in a plane which passes through the centroid of the cell perpendicular to the central axis of the cell. Submerged areas are obtained from Figure 3.34 after scaling the cell draft in each position. Forces and moments obtained in the analysis are listed in Tables 3.12, 3.13 and 3.14.

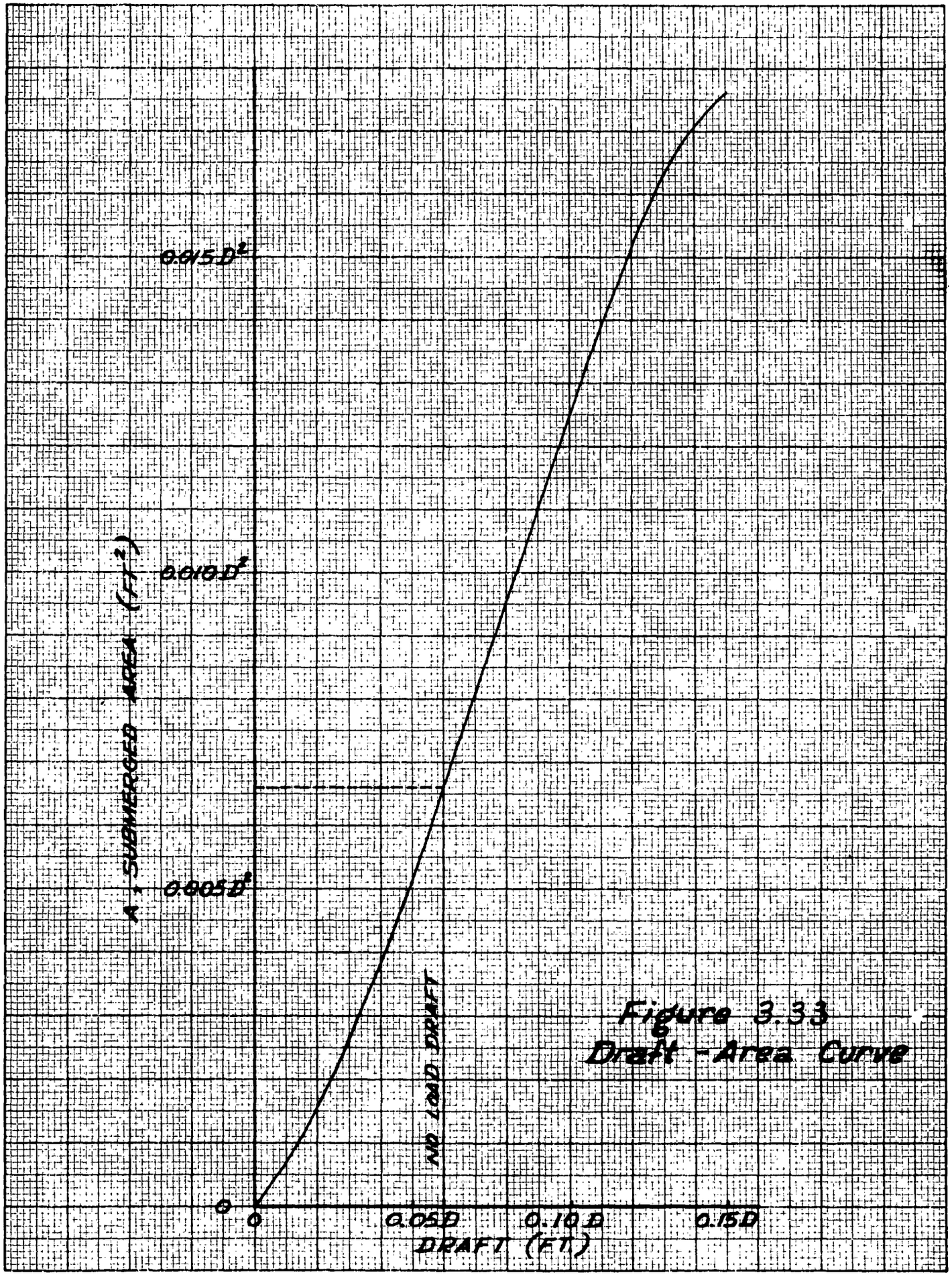

Figure 3.33
Draft - Area Curve

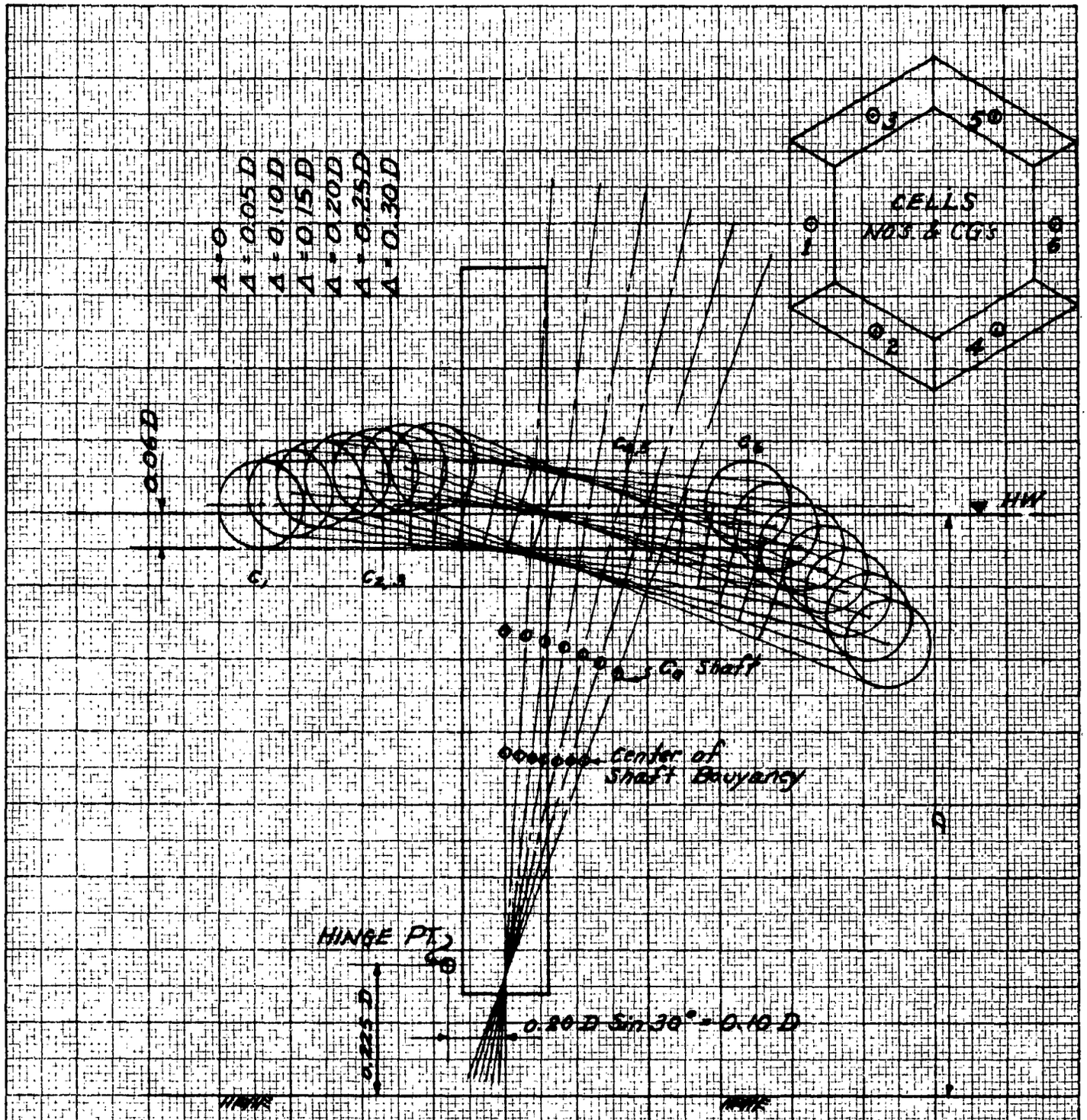

CONDITION I, MINIMUM RESISTING MOMENT (HIGH TIDE AND SHORT HINGE DISTANCE)

Figure 3.34

Small Scale Illustration of Graphical Solution for Ring Pontoon Dolphin

Δ	Cell	F_{bc} $x10^4/D^3$	M_{bc} $x10^4/D^4$
0	1	2.07	+0.66
	2	2.07	+0.23
	3	2.07	+0.23
	4	2.07	-0.64
	5	2.07	-0.64
	6	2.07	-1.08
	Totals	12.42	-1.24
0.05 D	1	1.41	+0.40
	2	1.70	+0.10
	3	1.70	+0.10
	4	3.11	-1.12
	5	3.11	-1.12
	6	3.45	-1.97
	Totals	14.48	-3.61
0.10 D	1	0.56	+0.13
	2	1.70	+0.02
	3	1.70	+0.02
	4	4.15	-1.70
	5	4.15	-1.70
	6	5.00	-3.05
	Totals	17.26	-6.28
0.15 D	1	0.35	+0.06
	2	1.70	-0.05
	3	1.70	-0.05
	4	5.44	-2.45
	5	5.44	-2.45
	6	5.53	-3.38
	Totals	20.16	-8.32

Δ	Cell	F_{bc} $x10^4/D^3$	M_{bc} $x10^4/D^4$
0.20 D	1	0.10	+0.02
	2	1.85	-0.14
	3	1.85	-0.14
	4	5.44	-2.66
	5	5.44	-2.66
	6	5.53	-3.87
	Totals	20.21	-9.45
0.25 D	1	0	0
	2	2.04	-0.26
	3	2.04	-0.26
	4	5.53	-2.98
	5	5.53	-2.98
	6	5.53	-4.09
	Totals	20.67	-10.57
0.30 D	1	0	0
	2	2.42	-0.41
	3	2.42	-0.41
	4	5.53	-3.15
	5	5.53	-3.15
	6	5.53	-4.26
	Totals	21.43	-11.38

Forces are in kips
Moments are in kip-feet

TABLE 3.12

Buoyant Forces and Moments for Pontoon - Condition I

Δ	Cell	F_{bc} $x10^4/D^3$	M_{bc} $x10^4/D^4$
0	1	2.07	+0.48
	2	2.07	+0.02
	3	2.07	+0.02
	4	2.07	-0.85
	5	2.07	-0.85
	6	2.07	-1.30
	Totals	12.42	-2.48
0.05 D	1	1.13	+0.20
	2	2.04	-0.08
	3	2.04	-0.08
	4	3.80	-1.56
	5	3.80	-1.56
	6	4.74	-3.18
	Totals	17.55	-6.26
0.10 D	1	0.56	+0.07
	2	2.42	-0.22
	3	2.42	-0.22
	4	5.28	-2.64
	5	5.28	-2.64
	6	5.53	-3.92
	Totals	21.49	-9.57
0.15 D	1	0.35	+0.03
	2	2.76	-0.36
	3	2.76	-0.36
	4	5.53	-3.00
	5	5.53	-3.00
	6	5.53	-4.15
	Totals	22.46	-10.84

Δ	Cell	F_{bc} $x10^4/D^3$	M_{bc} $x10^4/D^4$
0.20 D	1	0.28	+0.01
	2	3.46	-0.62
	3	3.46	-0.62
	4	5.53	-3.15
	5	5.53	-3.15
	6	5.53	-4.26
	Totals	23.79	-11.79
0.25 D	1	0.28	-0.01
	2	4.43	-0.97
	3	4.43	-0.97
	4	5.53	-3.32
	5	5.53	-3.32
	6	5.53	-4.37
	Totals	25.73	-12.96
0.30 D	1	0.41	-0.03
	2	4.74	-1.23
	3	4.74	-1.23
	4	5.53	-3.48
	5	5.53	-3.48
	6	5.53	-4.48
	Totals	26.48	-13.93

Forces are in kips
Moments are in kip-feet

TABLE 3.13

Buoyant Forces and Moments for Pontoon - Condition II

Δ Deflection	F_{bp} $x10^4/D^3$	F_{bs} $x10^4/D^3$	W_p $x10^4/D^3$	W_s $x10^4/D^3$	M_{bp} $x10^4/D^4$	M_{bs} $x10^4/D^4$	M_{wp} $x10^4/D^4$	M_{ws} $x10^4/D^4$	ΣM $x10^4/D^4$	y	P $x10^4/D^3$
Condition I (Minimum Resisting Moment Condition)											
0	-12.42	- 9.3	+12.4	+3.0	- 1.24	-0.93	+1.24	+0.30	- 0.63	0.80D	+ 0.73
0.05 D	-14.48	- 9.4	+12.4	+3.0	- 3.61	-1.13	+1.86	+0.42	- 2.46	0.80D	+ 3.07
0.10 D	-17.26	- 9.5	+12.4	+3.0	- 5.28	-1.33	+2.48	+0.51	- 4.62	0.83D	+ 5.57
0.15 D	-20.16	- 9.7	+12.4	+3.0	- 8.32	-1.65	+2.98	+0.60	- 6.39	0.84D	+ 7.60
0.20 D	-20.21	- 9.8	+12.4	+3.0	- 9.45	-1.86	+3.60	+0.72	- 6.99	0.85D	+ 8.23
0.25 D	-20.67	-10.1	+12.4	+3.0	-10.57	-2.12	+4.21	+0.81	- 7.67	0.85D	+ 9.03
0.30 D	-21.43	-10.4	+12.4	+3.0	-11.38	-2.50	+4.58	+0.90	- 8.39	0.85D	+ 9.87
Condition II (Maximum Resisting Moment Condition)											
0	-12.42	- 6.4	+12.4	+3.0	- 2.48	-1.28	+2.48	+0.60	- 0.68	0.54D	+ 1.23
0.05 D	-17.55	- 6.8	+12.4	+3.0	- 6.26	-1.50	+3.10	+0.75	- 3.91	0.56D	+ 7.0[illegible]
0.10 D	-21.49	- 7.0	+12.4	+3.0	- 9.57	-1.68	+3.60	+0.90	- 6.75	0.58D	+11.[illegible]
0.15 D	-22.46	- 7.3	+12.4	+3.0	-10.84	-1.90	+4.10	+1.02	- 7.62	0.58D	+13.1
0.20 D	-23.79	- 7.5	+12.4	+3.0	-11.79	-2.10	+4.70	+1.14	- 8.05	0.59D	+13.7
0.25 D	-25.73	- 8.1	+12.4	+3.0	-12.96	-2.51	+5.10	+1.26	- 9.11	0.59D	+15.5
0.30 D	-26.48	- 8.7	+12.4	+3.0	-13.93	-2.96	+5.35	+1.38	-10.16	0.58D	+17.5

All distances are in feet
All forces are in kips

TABLE 3.14

Summary of Force vs. Deflection Calculations for Ring Pontoon Dolphin

Plot load and energy curves:

The resulting load vs. deflection and energy absorbed vs. deflection curves are shown in Figure 3.35. Energy absorption capacity and steel weight curves for dolphins of various sizes are shown in Figure 3.36. As an example, the weight of the largest ship which can strike a dolphin of D = 40' with a factor of safety of 2.0 at a velocity of 0.5 fps will be computed:

At maximum deflection under condition I,

$$U = 1.7 \times D^4 \times 10^{-4} \text{ ft.kips}$$

$$U = 1.7 \times 10^{-4} \times 40^4 = 435 \text{ ft.kips} \quad \text{or} \quad 194 \text{ ft.T}$$

$$\frac{U}{F_s} = \frac{194}{2} = 97 \text{ ft.T}$$

$$W = \frac{4\ Ug}{v^2}$$ using a 50% reduction in kinetic energy of the ship

$$W = \frac{4 \times 97 \times 32.2}{(1/2)^2} = 50{,}000 \text{ tons}$$

The maximum deflection under this collision force occurs under condition I, and is 0.173 D or 6.9 feet. The maximum horizontal thrust, P, between dolphin and ship for this collision occurs under condition II, and is $12 \times 10^{-4} \times D^3$ or 77 kips.

Check for collar slip on dolphin of D = 40':

Collar slip is most critical at the maximum deflection of 0.275 D under condition I. Under that condition, the

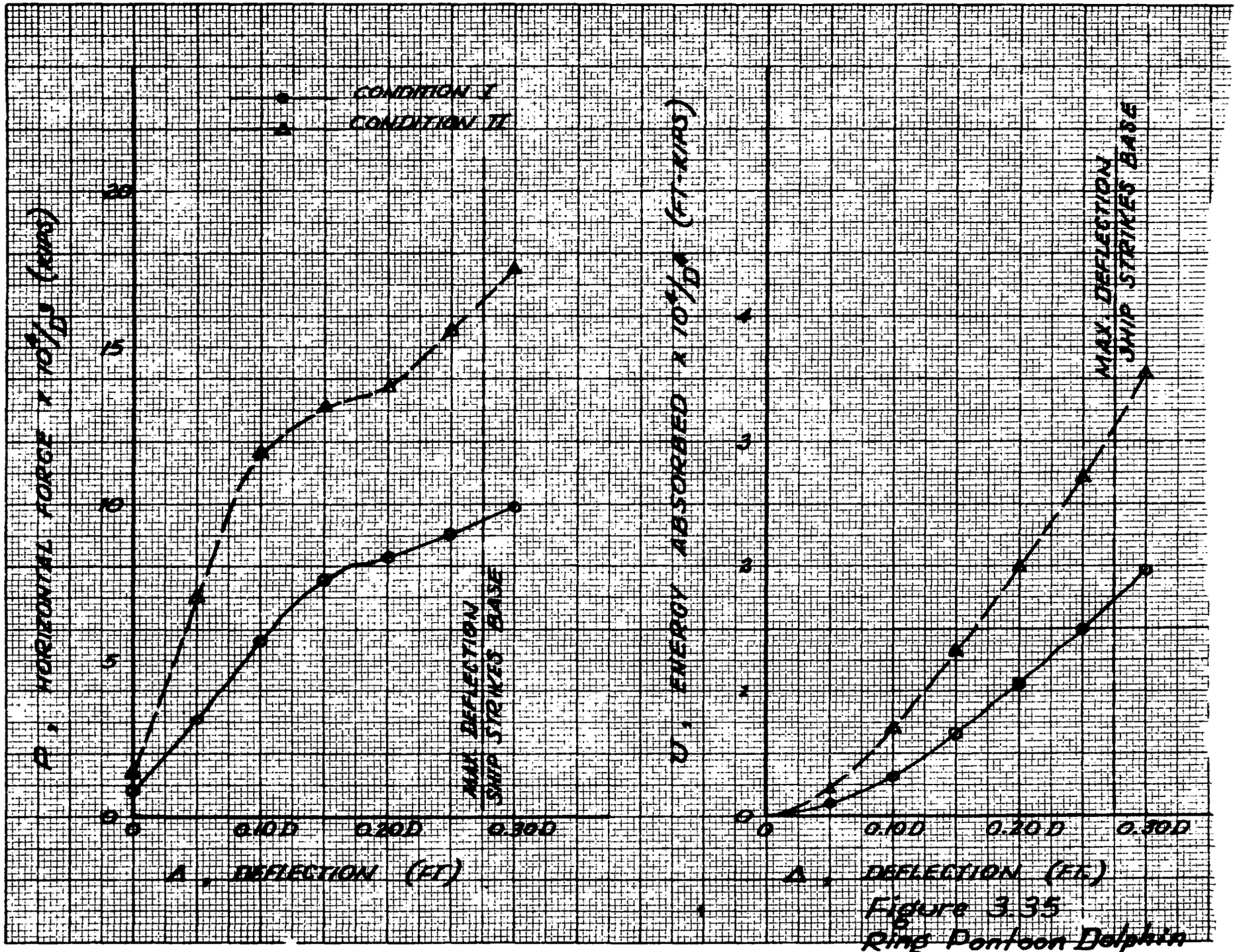

Figure 3.35
Ring Pontoon Dolphin

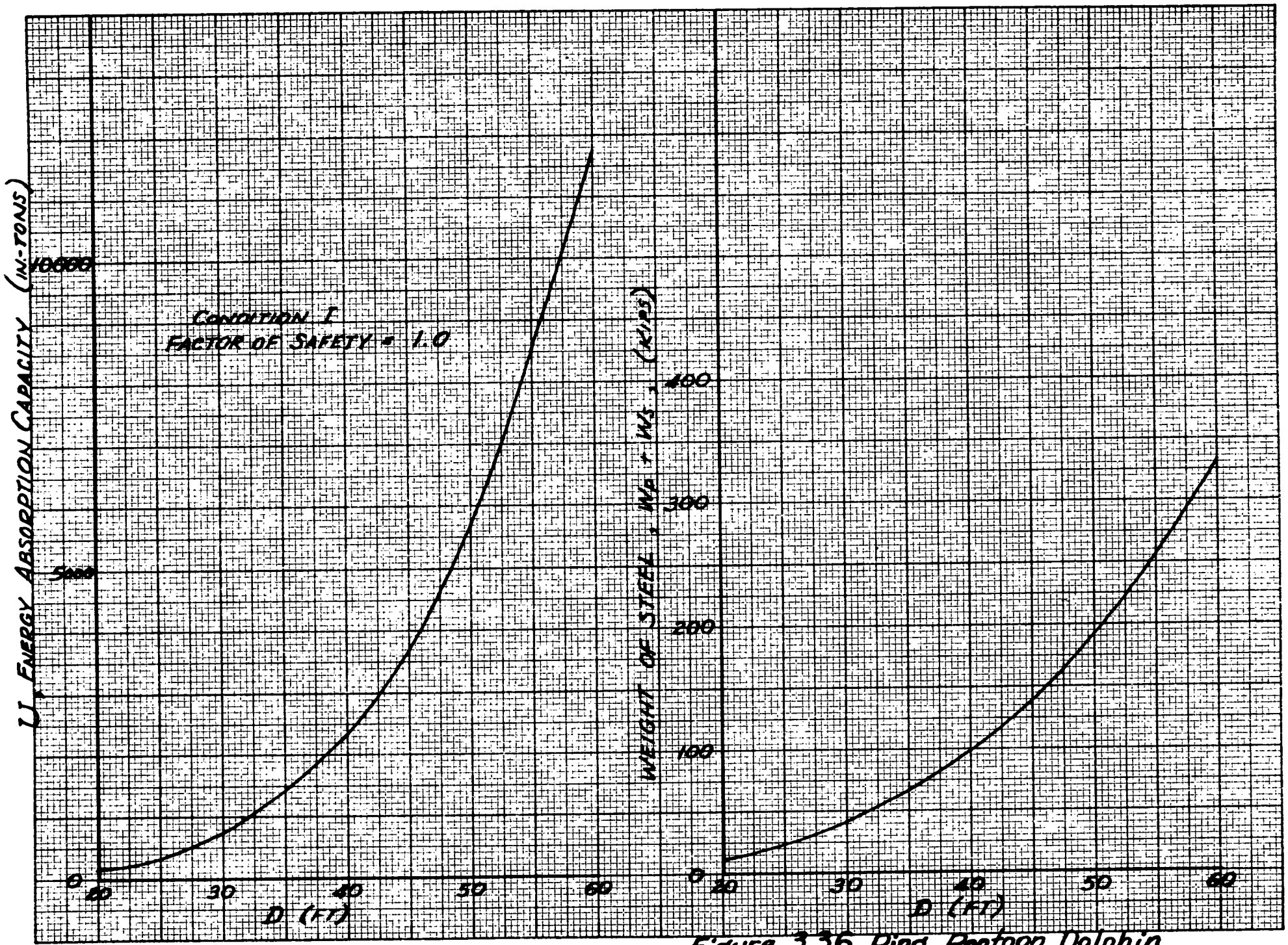

Figure 3.36 Ring Pontoon Dolphin

following forces and angle of tilt prevail:

From Table 3.12, interpolating between $\Delta = 0.25$ D and $\Delta = 0.30$ D,

$$F_{b1} = 0$$

$$F_{b2} + F_{b3} = 4.46 \times 10^{-4} D^3 \quad \text{or} \quad 28.6 \text{ kips}$$

$$F_{b4} + F_{b5} = 11.06 \times 10^{-4} D^3 \quad \text{or} \quad 70.7 \text{ kips}$$

$$F_{b6} = 5.53 \times 10^{-4} D^3 \quad \text{or} \quad 35.4 \text{ kips}$$

From Figure 3.35,

$$P = 9.5 \times 10^{-4} D^3 \quad \text{or} \quad 61 \text{ kips}$$

From Figure 3.34,

$$\theta = 19^\circ$$

Previously calculated,

$$W_p = 12.4 \times 10^{-4} D^3 \quad \text{or} \quad 79.4 \text{ kips}$$

Figure 3.37 shows application of these forces to the pontoon structure in the tilted position.

Taking the sum of moments about point "O",

$$\begin{aligned}\Sigma M_o = 0 = &- 61(8 \cos 19^\circ - 17 \sin 19^\circ) - 79.4(8 \sin 19^\circ) \\ &+ 28.6(8.5 \cos 19^\circ + 8 \sin 19^\circ) \\ &- 70.7(8.5 \cos 19^\circ - 8 \sin 19^\circ) \\ &- 35.4(17 \cos 19^\circ - 8 \sin 19^\circ) + 10 N\end{aligned}$$

$$N = 0.10(+122 + 206 - 304 + 381 + 479)$$

$$N = 88.4 \text{ kips.}$$

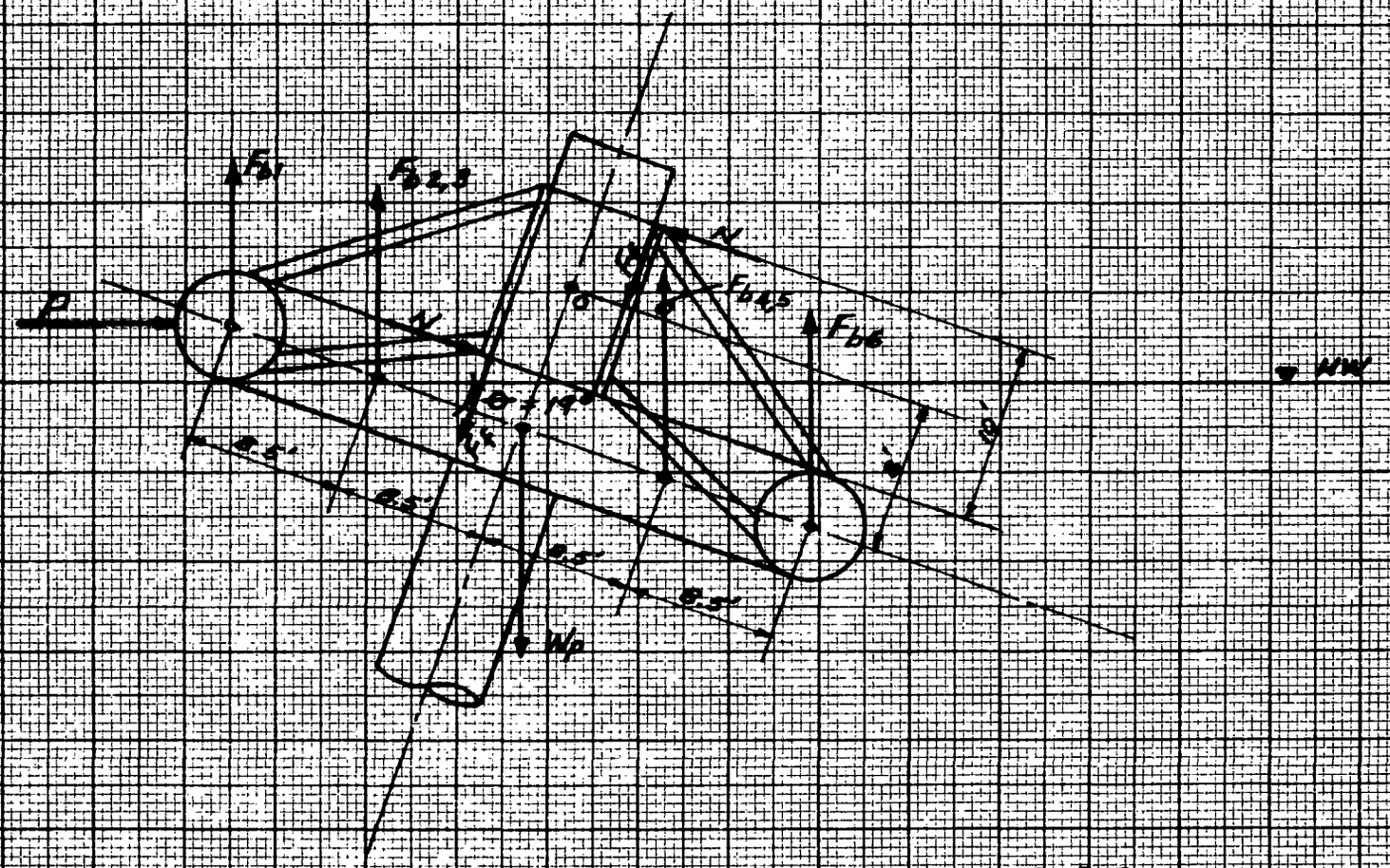

Figure 3.37
Collar Slip Analysis for
Ring Pontoon Dolphin
D = 40'

Using a coefficient of friction of 0.40 for wood on metal (the collar will be lined with greenheart timber),

$$F_f = 0.40(88.4) = 35.4 \text{ kips.}$$

For stability,

$$2\,F_f + W_p \cos 19^\circ > P \sin 19^\circ + \cos 19^\circ(F_{b1} + F_{b2} + F_{b3} + F_{b4} + F_{b5} + F_{b6})$$

$$2(35.4) + 79.4 \cos 19^\circ = 146 \text{ kips}$$

$$61 \sin 19^\circ + \cos 19^\circ(28.6 + 70.7 + 35.4) = 147 \text{ kips.}$$

The apparent low factor of safety of about unity against collar slip is not of primary concern since there exists a factor of safety of 2.0 against the 50,000 ton vessel tilting the dolphin to the position of maximum deflection used for the collar slip analysis. It should be noted from the above calculations that the vertical position of the collar relative to the pontoon and the length of the collar determine to a large extent the stability against collar slip.

Perform structural design:

A detailed structural analysis of the dolphin was not made as a part of this study. The value of design loads occur under condition II, and can be taken from Figure 3.35 and Tables 3.12, 3.13 and 3.14. Preliminary study of the problem indicates the following structural details:

(1) Fenders. The fender should be of 16" x 16" greenheart timber attached by studs to a large channel welded around the perimeter of the pontoon. At cell intersection points the fender beam ends should be rounded off to prevent presentation of a point load to a ship's hull in the event of an unusual approach.

(2) Pontoon Cells. The cells should be strengthened against local buckling by welding hoop rings around their exterior at spaces of about 4 ft. Diaphragms should be installed at joints between cells to provide strength and to make each cell independently buoyant.

(3) Radial Trusses. Trusses can be constructed of steel pipe. The use of round members with welded connections is recommended to minimize the effect of the severe corrosion characteristic of the splash zone.

(4) Collar. The collar should be very stiff to prevent distortion under the large forces it must transmit. It should be lined with greenheart timbers as shown in the drawings in Appendix F to reduce wear of the shaft and to increase the coefficient of friction between collar and shaft and therefore the safety against collar slip.

(5) Shaft. The shaft should be stiffened internally by means of diaphragms spaced at about 4 ft. over the range of collar movement with tidal variations. A single diaphragm should be installed within the shaft, level with the top of the cantilever arms.

(6) Cantilever Arms. The arms should be constructed of heavy WF or box-shaped steel sections. The contact areas between the cantilever arms and the base connecting frames will be subjected to continual wear due to wave action on the dolphin. It is suggested that these areas be heavily reinforced with exchangeable steel shoes, bolted on to allow replacement by a diver when required. At some slight expense of resisting moment, the shaft could be ballasted with water to decrease the contact force between the cantilever arms and the connecting frames, thus reducing the rate of wear of the steel shoes.

(7) Base Connecting Frames. These frames could be constructed of either steel or reinforced concrete. If of reinforced concrete, heavy steel bearing plates should be provided in the cantilever arm contact zone as described above. The frame openings should be sufficiently wide at the base to provide clearance for the sides of the cantilever arms in all tilted positions. The frames should be high enough to allow some clearance between the tip of the cantilever arms and the top of the base in the position of maximum tilt.

(8) Base. The base should be constructed of reinforced concrete.

(9) Piling. The six piles should be of steel to facilitate cutoff underwater. They should be driven to sufficient

depth to withstand tensile loads imposed in the position of maximum tilt. For a dolphin of D = 40' with piles arranged as shown in Figure 3.32, an uplift force of approximately 21 tons would be imposed on each pile if the dolphin were subjected to an ultimate collision. Clamps for locking the pile heads against the top of the concrete base could be attached by means of underwater welding, or underwater drilling and bolting.

5. Construction Method

All parts of the dolphin can be fabricated or precast ashore. One possible erection sequence is as follows:

(a) Set base with floating crane.

(b) Using base as a template, drive piles.

(c) Cut off piles and attach clamps.

(d) Place shaft in water and ballast with water to vertical position.

(e) Set completed pontoon structure in place on shaft.

(f) Float to job site.

(g) Having constructed the shaft assembly with one short cantilever arm, insert two remaining cantilever arms into connecting frames, using ballast as necessary.

(h) Install underwater, by means of a bolted connection, the tip of the short cantilever arm.

(i) Pump out ballast water and seal.

F. Baker Bell Dolphin

1. Description

This dolphin is the subject of British Patent No. 507774. The dolphin consists of a massive bell supported on a pile structure having a domed top. The inner surface of the bell top forms a portion of a sphere having a greater radius than that of the supporting dome. There is therefore a spherical wedge-shaped space between the bell and its support. The dolphin structure is illustrated in section by Figure 3.38. Horizontal forces applied at any point on the side of the bell cause it to tilt from the vertical. The point of contact between bell and dome will then move from the apex of the dome to a point nearer the side of the bell where the load is applied. Thus a righting moment is developed. Because of the relatively large deflection undergone during absorption of energy, the supporting pile structure is not subjected to the high horizontal forces associated with more rigid dolphins. The bell is free to rotate about the dome, providing however a frictional resistance to tangential forces. One advantage of the bell's ability to be rotated is that fender repairs can proceed on the inshore side of the dolphin while the undamaged side is exposed. Because the bell does not adjust to tidal variation, its skirt and fender system must be made sufficiently long to cover the tide range.

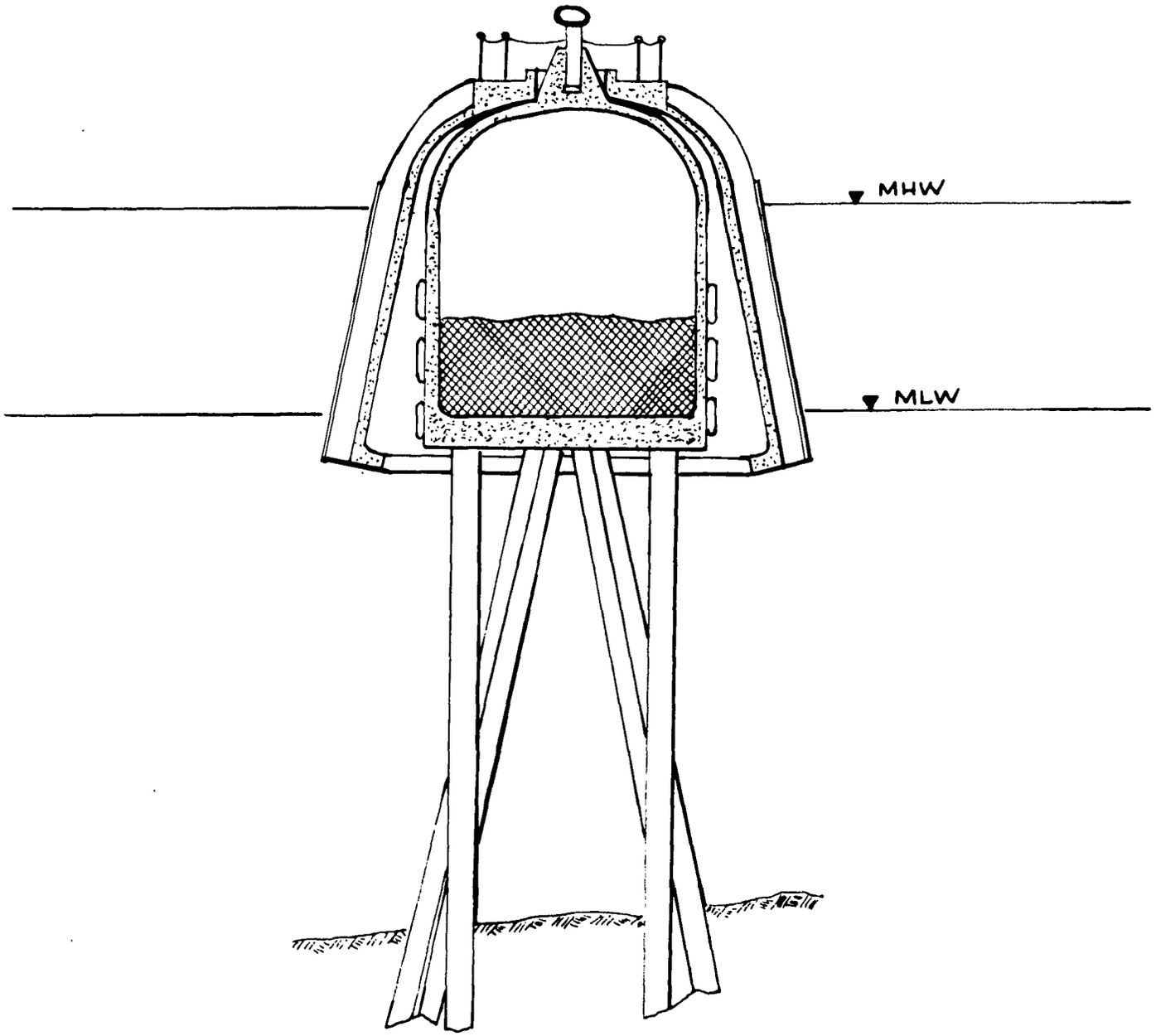

SECTION THROUGH BELL DOLPHIN

Figure 3.38

2. Application

Because of its relatively great energy absorption capacity, this dolphin is primarily intended for use in berthing, or as a protection device for waterfront structures.

3. Past Performance

Dolphins of this type have been used primarily for protection purposes on an exposed pier at Heysham, U.K., for almost 20 years, and have been proven effective in preventing damage to the pier as well as to shipping. The site is exposed to 80 mph gales, currents of four knots, and has a tide range of 30 feet (Ref. 5). No major maintenance problems have been experienced.

4. Materials

The bells used at Heysham are constructed of steel with concrete block weights. There is no reason why similar bells could not be constructed entirely of reinforced concrete. The dome is constructed of reinforced concrete, and the piles are of steel.

5. Design

Energy absorption capacity for a dolphin of given proportions can be simply determined by scale drawings sufficiently large to allow location of the hinge point at

various positions of deflection. Professor A. L. L. Baker, the inventor, has reported that the bells of the Heysham dolphins weigh 170 tons, and have an energy absorption capacity of 1900 in-tons (Ref. 5). A horizontal force of about 130 tons applied at mid-height of the vertical fenders is required to tilt the bell to its extreme position. The energy absorption capacity of the dolphin is about the same regardless of the point of load application. The supporting pile structure should be designed for the lateral thrust developed under conditions of high tide at maximum tilt. Special attention should be given to design of the bearing surfaces between bell and dome, and provision should be made for greasing them at regular intervals.

6. Construction

The construction sequence for the bell dolphin is obvious. Final placement of the bell, which for reasons of economy should be fabricated ashore, might present a problem in some locations because of the heavy lift required.

G. Sheet Pile Mooring Cell

1. Description

This dolphin, primarily used for mooring, is often referred to as a mooring island. It consists of a circular cell of interlocked sheet piling driven into the harbor

bottom and filled with granular material. It is capped by a concrete slab to which is attached mooring bollards and bitts. Mooring cells of this type are made suitable for berthing by attachment of fenders.

2. Applications

Sheet pile mooring cells are most applicable for use at sites having rock located at or immediately below the harbor bottom. Under these conditions the cells could be constructed more simply than other types of mooring dolphins which would require some degree of pile fixity in the sea bed. With addition of a resilient fender system the cells can be made suitable for berthing as well as mooring. Since a fender system would have to extend vertically over the usual range of water levels, use of the cells for berthing large vessels in locations where wide tidal variations occur is impractical. Because of the probability of subsoil movement and shear failures, sheet pile mooring cells should not be used on harbor bottoms of soft clay.

3. Past Performances

Mooring dolphins of this type have been widely used with adequate success. A great deal of experience has been had with cellular cofferdams which are essentially the same as mooring cells in design principle and construction. White and Prentis offer in Reference (86) examples of

cellular cofferdams and practical information bearing upon construction.

4. Materials

Sheet piles used in circular mooring cells have to offer practically no resistance to bending. The radial outward pressure of the fill within a cell induces tension in the sheet pile interlocks. Accordingly, steel sheet piles having straight web sections with little section modulus and high interlock tension strength are employed.

As will be shown later, the resistance of the cell to lateral loads is directly dependent upon the angle of internal friction of the fill material. Accordingly, clean sand or gravel should be used as fill to get the highest resistance to lateral loads with a cell of given diameter. The unit weight of the fill should be as high as possible.

The top of the cell should be reinforced with a reinforced concrete slab supported on the steel sheet piles to retain the circular shape of the cell and provide a means of attaching mooring appurtenances.

5. Design

Design of a circular mooring cell is very similar to the design of a cellular cofferdam. The following basic differences should, however, be kept in mind.

(a) Seepage of water and the possibility of quick conditions are of no concern in mooring cells while they are of vital importance to cellular cofferdams.

(b) Water pressures are equal inside and outside mooring cells except in the case of a very rapid drop in exterior water level. Differential interior and exterior water pressures are significant in the design of cellular cofferdams.

(c) Mooring cells are never drained and the fill below water level is buoyed at the time of horizontal load application. They therefore offer less resistance to tilting than cellular cofferdams of equivalent size and construction materials.

(d) Mooring cells are usually permanent structures while most cellular cofferdams are of a temporary nature.

Sheet pile mooring cells constructed on rock owe their resistance to tilting to the resistance to shear of the fill material and the resistance to vertical slip of the sheet pile interlocks. Cells constructed by driving the sheet piles to some depth in sand or clay have additional resistance to tilting due to the passive resistance of the subsoil layers.

For calculating the shear resistance of the fill in mooring cells constructed on rock, the method presented by Schneebeli and Cavaille-Coll at the 4th International Conference on Soil Mechanics and Foundation Engineering, London, 1957, Reference (67), is recommended. They propose the formula

$$\frac{6\ M_r}{\gamma\ h^3} = 0.03\ c\ \phi$$

which is derived from the slip-line theory (Kötter's equations) and in which:

M_r = maximum overturning moment taken at the foot of a double wall cofferdam for a unit length section of the structure

γ = specific weight of granular fill

ϕ = friction angle of fill in degrees

h = height of cofferdam

c = the width/height ratio (b/h) of the cofferdam

The formula is reported to compare favorably with the results of model tests for values of ϕ between 26 and 44 degrees and values of c between 0.6 and 1.2. The assumed approximate slip-lines are circular as illustrated by Figure 3.39.

Adaptation of the formula for use in design of circular cells requires conversion of the circular cell to an equivalent rectangular one. The equivalent area method in

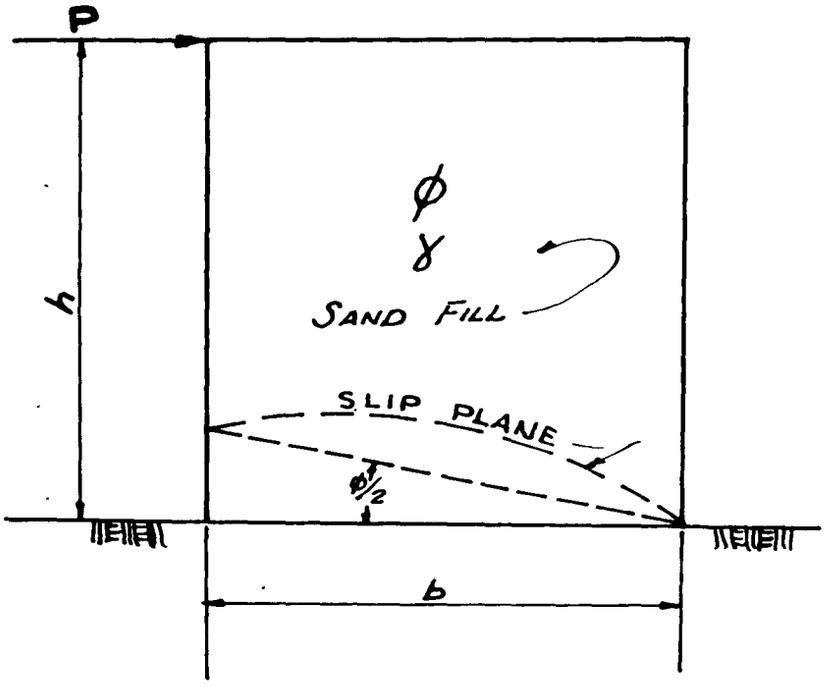

Figure 3.39

APPROXIMATE SLIP PLANE USED IN SCHNEEBELI-CAVAILLE-COLL ANALYSIS

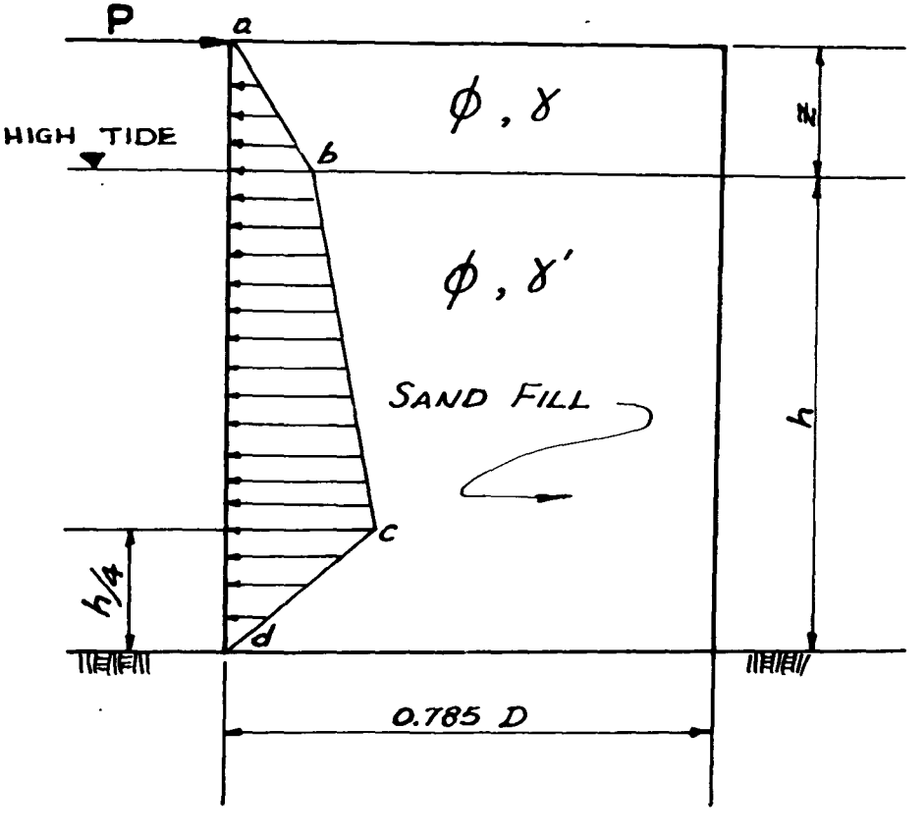

Figure 3.40

TYPICAL MOORING CELL

which b, the width of the cell, is taken as 0.785 d (d is the cell diameter), and the length of the cell is taken as d, is recommended. The formula for total resisting moment of the cell (excluding interlock friction) can then be written

$$M_r = \frac{0.03 \cdot 0.785\ d^2 \gamma h^2 \phi}{6}$$

Modification of this formula to fit the case of a typical mooring cell, illustrated by Figure 3.40, in which part of the fill is buoyed and part is above water level, can be accomplished by substituting an average unit weight of fill for γ, and the sum z + h for the height of the cell.

$$\text{average} = \frac{z\gamma + h\gamma'}{z + h}$$

$$M_r = \frac{0.03 \cdot 0.785\ d^2 \phi}{6}\left(\frac{z\gamma + h\gamma'}{z + h}\right)(z + h)^2$$

The ultimate resistance of the cell (exclusive of interlock friction) to a horizontal load, P_u, applied at a height z + h above the base of the cell can then be written:

$$P_u = \frac{0.785\ d^2 \phi}{200}\ (z\gamma + h\gamma')$$

The resisting moment of the cell due to interlock friction is a function of the earth pressure, E_a, acting against the interior of the cell, the dimensions of the cell in plan, and the coefficient of friction, μ, between the sheet pile interlocks. Again, computations are made on

the basis of an equivalent rectangular cell of width 0.785 d, and length d. The earth pressure per foot length of cell, E_a, is taken as the area of the diagram abcd shown in Figure 3.40. The diagram is based upon Coulomb pressure distribution reduced for a distance of h/4 above the base to account for possible failure to develop full interlock tension at the base due to friction of the sheet pile ends on the rock surface.

$$E_a = \tan^2(45 - \frac{\phi}{2})\left[\frac{\gamma z^2}{2} + \frac{3h\gamma z}{4} + \left(\frac{3h}{4}\right)^2 \frac{\gamma'}{2} + \frac{h}{8}\left(\gamma z + \frac{3h\gamma'}{4}\right)\right]$$

The total tension force in the cross wall interlocks is $E_a d$, and the vertical friction resistance along each pair of interlocks is $\mu E_a d$. A moment causing tilting of the cell would then be required to overcome a couple, $w\mu E_a d$, for each sheet pile of width, w, in each of the two cross walls. The total resisting moment for a total of n piles in the two cross walls would then be $nw\mu E_a d$. Since nw must be equal to two times the width of the cell or 1.57 d, the total resisting moment due to interlock tension can be written

$$M_r = 1.57\mu E_a d^2$$

and the ultimate resistance due to interlock friction to a horizontal load, P_u, applied at distance h + z above the base is

$$P_u = \frac{1.57\mu E_a d^2}{h + z}$$

Combining the previous equation for P_u due to shear resistance of the fill with the above, the total ultimate resistance to a horizontal load applied at the top of the cell is

$$P_u = \frac{0.785\ d^2 \phi}{200} (z\gamma + h\gamma') + \frac{1.57 \mu E_a d^2}{h + z}$$

It is recommended that a factor of safety of 2 be applied in the case of all permanent mooring cells.

Figure 3.41 shows P_u as a function of d for the following more or less typical conditions:

$\phi = 30^\circ$

$\gamma = 110\ \#/f^3$

$\gamma' = 60\ \#/f^3$

$h = 38'$

$z = 6'$

$\mu = 0.30$

It is important to note that calculations should be based upon the highest anticipated water level.

Because of the high point of load application, sliding of a mooring cell on a rock bottom is never critical.

Because the majority of the fill is buoyed at all times and hydrostatic pressures are minimal except when there occurs a rapid drop in exterior water level over a considerable vertical distance, bursting of mooring cells due to failure of the sheet pile interlocks in tension is remote. Maximum stress in the sheet pile interlocks under

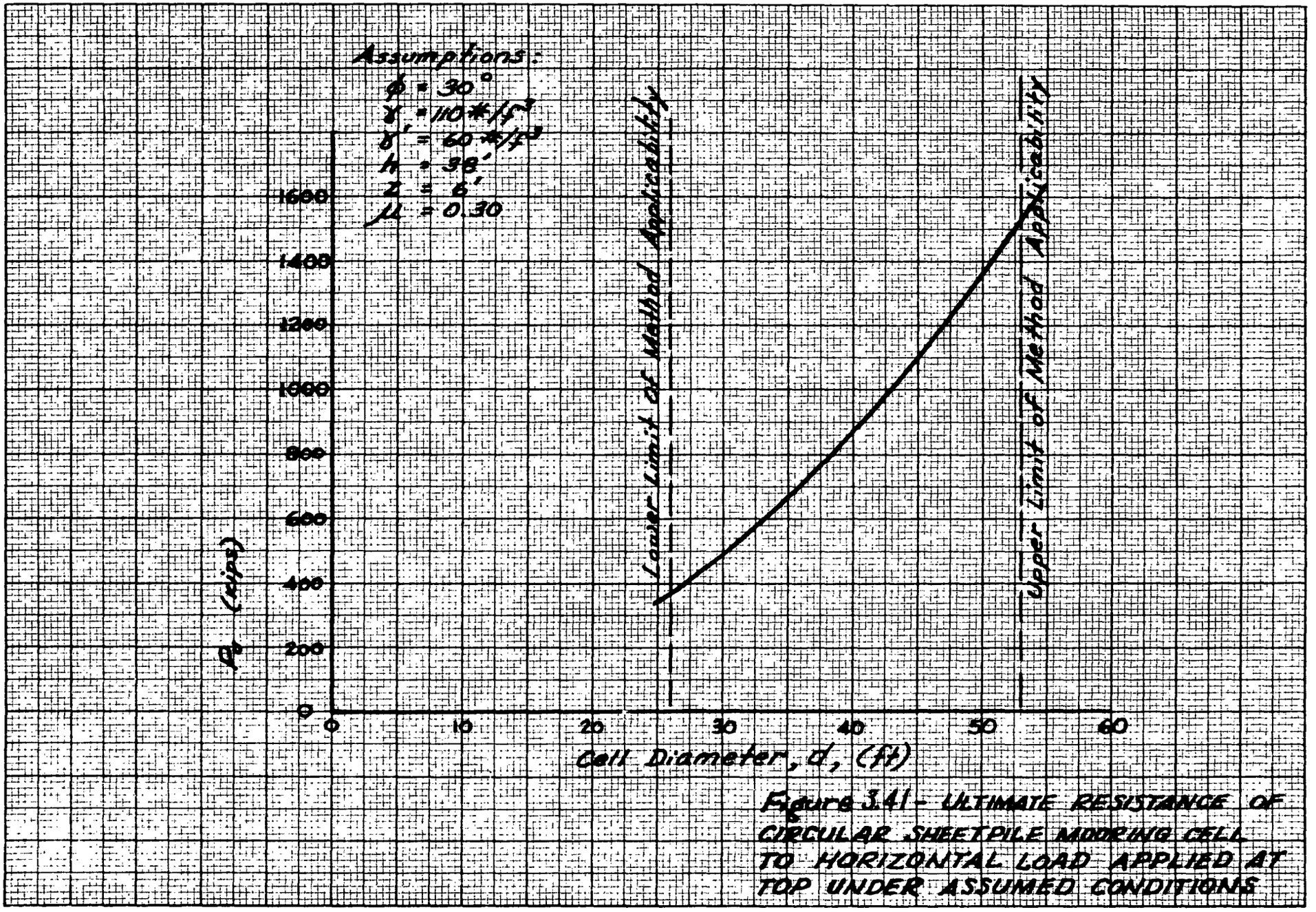

Figure 3.41 - ULTIMATE RESISTANCE OF CIRCULAR SHEETPILE MOORING CELL TO HORIZONTAL LOAD APPLIED AT TOP UNDER ASSUMED CONDITIONS

normal conditions is:

$$T = \frac{pd}{24}$$

where T = interlock stress (#/in.)

p = Coulomb pressure at the base of the cell = $(\gamma z + \gamma' h)\tan^2(45 - \frac{\phi}{2})$(#/ft.^{2}) calculated at low water

d = diameter of cell (ft.)

For cells used in berthing, it is recommended for protection of the ship that the cell be considered to be infinitely stiff, and that a fender system capable of absorbing the entire collision kinetic energy be added to the cell. The required resistance to lateral load of the cell will then be dependent upon the resilience of the fender system and the collision parameters.

6. Construction

There is nothing unique about the construction technique for a sheet pile mooring cell. Some particular points are, however, worth mention.

(a) Sheet pile interlocks should not be lubricated as is sometimes done in cofferdam construction to facilitate removal.

(b) Sheet piles must not be overdriven, allowing distortion of interlocks and consequent future leaching of fill.

(c) A manhole should be located in the concrete cap to facilitate replenishment of the fill in the event of settlement or loss of fill.

(d) Every effort should be made during construction to obtain maximum densification of the fill material.

CHAPTER IV

APPLICATION OF FENDERS TO DOLPHINS

As has often been repeated in this thesis, the dynamic loads due to ships striking a dolphin in their approach or when rocked by waves while in berth present a special problem. Upon contact with the dolphin the kinetic energy of the ship is converted into work according to the familiar expression

$$\frac{1}{2} M V^2 = P_{ave.} \cdot \Delta$$

That is, the work done is equal to some average force acting through the distance Δ. This distance may be the movement or deflection of the entire dolphin structure, or just a part of the dolphin specially designed for this purpose. This movable part which receives the energy of the blow from the ship and transmits the reaction from impact to the dolphin or pier is the fender. It is evident that as Δ is increased, the force $P_{ave.}$ is reduced. The designer, therefore, has control over the force by providing different degrees of flexibility in the structure, its fender system, or in both.

Flexible dolphins that are used for berthing generally have enough inherent energy absorption capacity such that the resultant impact forces are not excessive, and extensive "energy type" fendering systems are not required.

Only rubbing faces are needed for such dolphins. Although in practice the rubbing fenders will be crushed to a limited extent, the amount of energy absorbed thereby will be small compared with the energy absorbed in straining or deflecting the structure, and may be neglected.

It is sometimes impractical or uneconomical to design a dolphin structure with enough flexibility and, at the same time, meet the necessary strength requirements. Rigid or massive type dolphin structures having special devices or fenders with high energy absorption capacity to prevent excessive reaction and consequent damage to both ship and structure may be used instead.

A mass of 1000 tons moving at a speed of one foot per second has an approximate kinetic energy of 40 in-tons. If it is assumed that half the weight of a vessel is effective when it comes alongside, then a vessel of 80,000 tons moving at a speed of 1 foot per second will require a fender of 1600 in-tons capacity to receive it safely. Similarly, a vessel of 1000 tons will require 20 in-tons of fendering.

Use of fendering systems of this wide range are now becoming common practice so that even rigid dolphins can be built to safely berth the largest of ships and in comparatively exposed locations.

The design of a fender is governed by the magnitude and direction of the forces acting upon it. The major component

of force is generally the horizontal force, normal to the dolphin and resulting from stopping the ship's approach. Then there is the longitudinal component or rubbing along the face of the dolphin. In connection with this component, all experience on all types of fendering -- large and small capacities -- has led to the conclusion that longitudinal or glancing blows are as important as those normal to the dolphin. They are however most difficult to take into account. As the ship rolls at contact with the fender, there are also up and down forces. These components vary with the different conditions of wind, current, and waves, and with the manner of maneuvering the ship.

Under ideal conditions of docking, the ship approaches slowly with its side parallel to the line of berthing dolphins. Contact between the ship and all of the dolphins is nearly simultaneous and the blow is thus distributed over many resilient fender units as shown in Case IV of Figure 4.1.

In a less perfect docking the ship approaches at an angle, hitting a dolphin first with the knuckle of the bow. Then the stern swings around and strikes a second blow on another portion of the same dolphin or on another dolphin. However, the first blow which is concentrated on a short length of fendering, as shown in Case I of Figure 4.1, is usually the critical one.

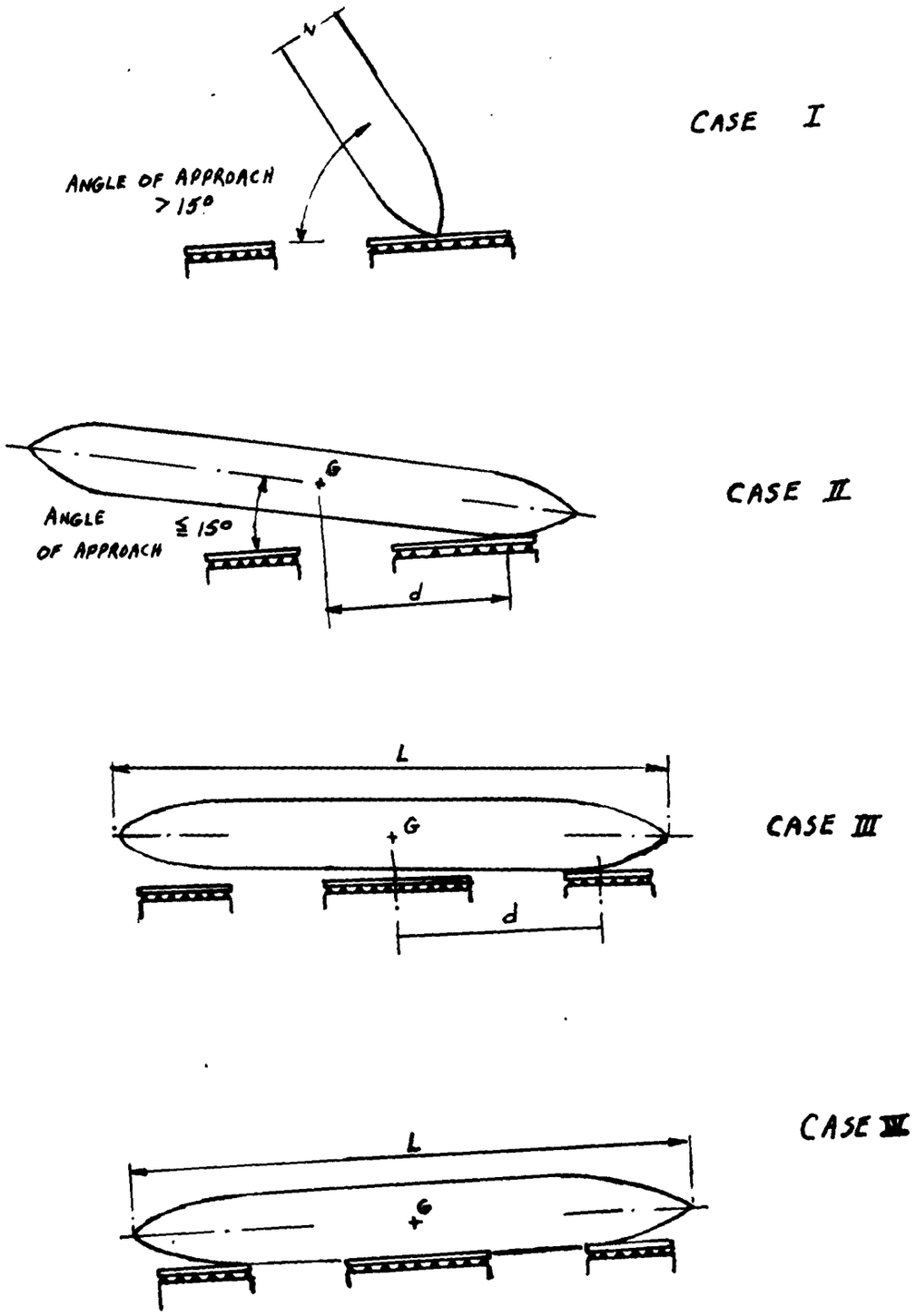

CONDITIONS OF BERTHING
(After H.W. Reeves ; Ref. 91)

FIGURE 4.1

In planning a new berth, especially in deep water, exposed to wind and wave, it is difficult to predict how the ships will be handled and what the approach velocity will be. In such cases judgment is necessary based on experience in other locations under similar conditions. Having established the magnitude of the energy to be handled and the forces involved, the rest of the design work involves the selection of as economical, compact and simple a fender system as possible. Accessibility for maintenance and replacement is very important and complicated mechanisms and precision fitted parts should be avoided.

Table 4.1 indicates energy absorption capacities of various typical resilient fendering units that can be applied to rigid berthing dolphins.

For very great energy absorption capacities, gravity or inertia fender systems are appropriate (Ref. 6). A gravity fender generally employs a heavy mass suspended from the structure. As the ship makes contact with the fender, the berthing energy is absorbed by moving the mass inward and upward.

The battering ram type of gravity fender should not be used where wave action may cause it to swing or bump against guides. The fender must evade longitudinal rubbing forces as much as possible, by being able to recede and turn away from projecting edges of the ship's plates which drag

TABLE 4.1

ENERGY ABSORPTION CAPACITIES OF TYPICAL STANDARD FENDER UNITS

FENDER UNIT	CAPACITY	MAX. DEFLECTION	ENERGY ABSORPTION
RAYKIN BUFFER No. 1	5 Tons	8"	25.5 in-Tons
RAYKIN BUFFER No. 2	25 Tons	12"	192 in-Tons
RAYKIN BUFFER No. 3	50 Tons	12"	384 in-Tons
NEIDHART Unit, No. 101	5 Tons	8"	15.2 in-Tons
NEIDHART Unit, No. 110	50 Tons	12"	224 in-Tons
5" ϕ GOODYEAR RUBBER TUBE	35 Tons per Ft.	3.3"	15 in-Tons per Ft.
10" ϕ GOODYEAR RUBBER TUBE	70 Tons per Ft.	6.7"	60 in-Tons per Ft.
15" ϕ GOODYEAR RUBBER TUBE	103 Tons per Ft.	10"	135 in-Tons per Ft.
Short Range Spring	50 Tons	3"	75 in-Tons
Long Range Spring	20-25 Tons	16"	135 in-Tons

across the fender face. Excessive longitudinal forces may be minimized by timber rubbing strips. The suspension links should be made of hard steel and the bearings of the links should be coated with bitumen grease or a similar adhesive and stiff lubricant. Link systems which are statically indeterminate should be avoided as the distribution of tension would be uncertain.

The main objection often made to the use of gravity fenders is their large weight. They are more difficult than other standard fender units to install. Moreover, their repair may be a more difficult operation than to replace springs or rubber blocks, unless they can be easily deballasted. Greater resilience, however, is provided with gravity fenders which results in more protection both for the ship and the dolphin structure. In addition, they have proven themselves to be very good from the standpoint of simplicity, lack of maintenance and long life. For heavy duty installations there are few of the standard types of fenders that can perform as efficiently and effectively as the gravity types.

For more specific information concerning design, construction, and maintenance of fendering systems for pier structures, the reader is referred to Reference (69).

The following examples are intended to illustrate various applications of both standard and gravity type fendering

systems to rigid dolphin structures whose functions include berthing as well as mooring of ships. Also described is a floating pontoon fendering system for dolphins operating in a very large tidal range.

1. Raykin Buffer

Fendering on breasting dolphins of an oil terminal recently constructed in Brazil consists of Raykin buffers (Ref. 91). This type of buffer is made up of rectangular rubber sandwiches bonded to steel plates which are bolted together to form an inverted "V". Tension limit devices or guides are not required, since it will work in tension as well as compression and will offer resistance to longitudinal loads. Another important characteristic, as may be noted from Figure 4.2, is that, due to the shape of its load-deflection curve, it will yield a lower reaction than a comparable steel spring at a given energy absorption and deflection.

The fendering for these dolphins was designed for two berthing conditions. The first, indicated in Figure 4.3(A), involves an energy transmission of 111 ft-tons over a contact length of 30 ft. The data upon which this berthing situation was based is as follows:

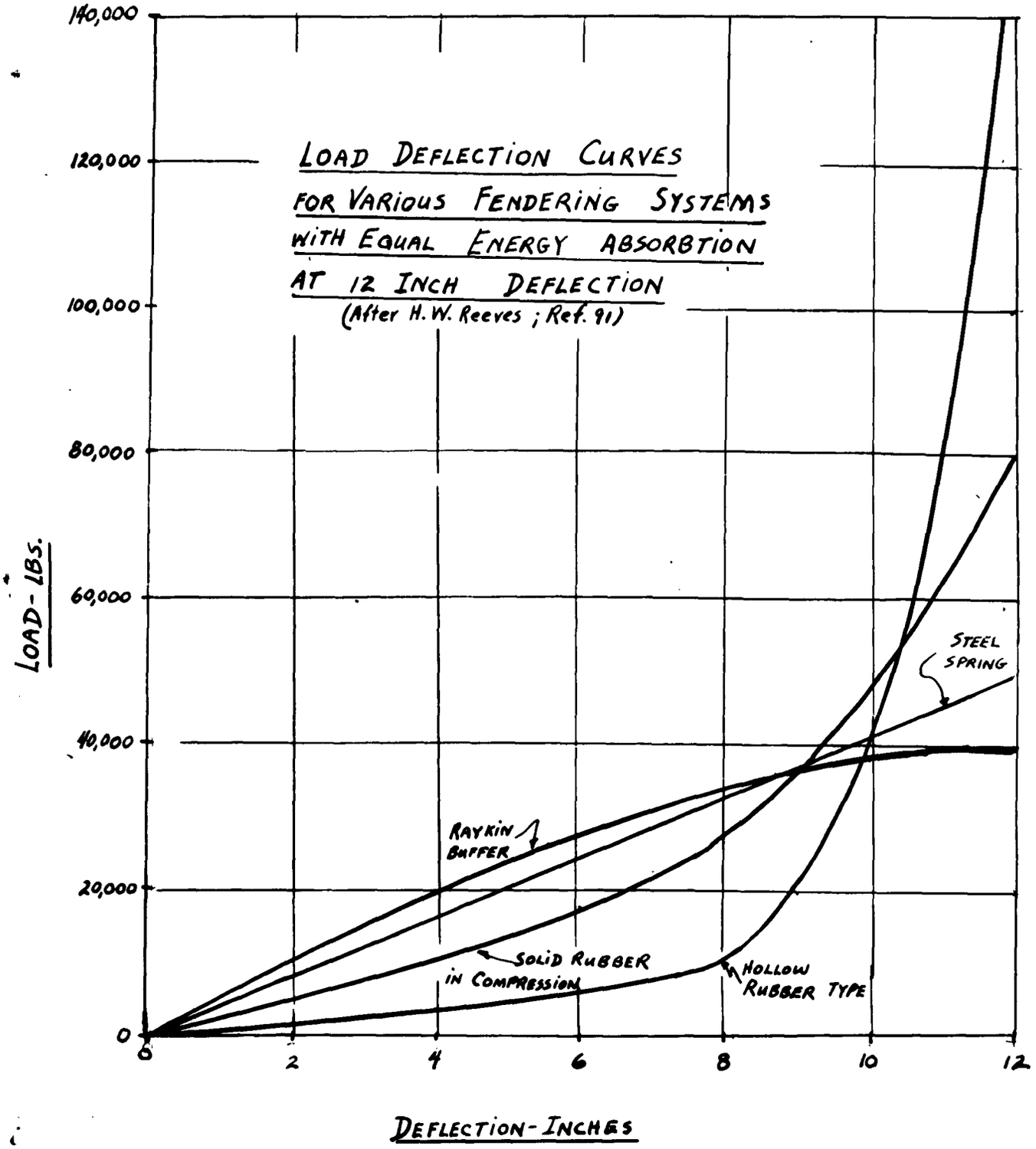
LOAD DEFLECTION CURVES
FOR VARIOUS FENDERING SYSTEMS
WITH EQUAL ENERGY ABSORBTION
AT 12 INCH DEFLECTION
(After H. W. Reeves ; Ref. 91)
140,000
120,000
100,000
80,000
60,000
40,000
20,000
0
LOAD - LBS.
0
2
4
6
8
10
12
DEFLECTION - INCHES
STEEL SPRING
RAYKIN BUFFER
SOLID RUBBER IN COMPRESSION
HOLLOW RUBBER TYPE

FIGURE 4.2

(After H. W. Reeves; Ref. 91)

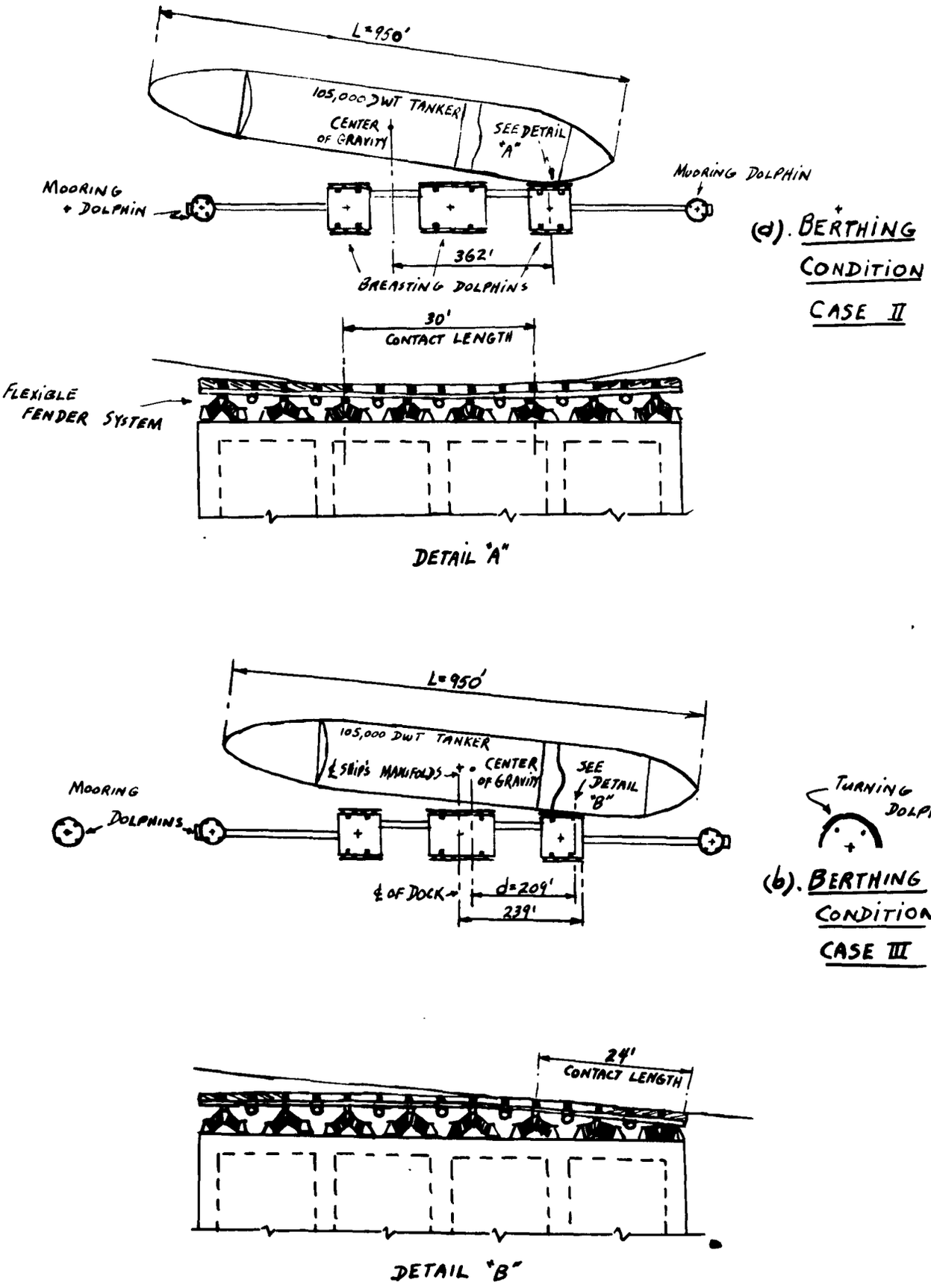

FIGURE 4.3

Size of tanker	-	137,140 tons total displacement
Approach velocity	-	1.0 knots
Approach angle	-	15°
Lateral approach velocity	-	0.42 ft. per sec.
Total kinetic energy of ship	-	370 ft-tons
Reduction coefficient	-	0.30
Energy to be absorbed	-	111 ft-tons
Uniform loading	-	13 kips per ft.

For the second berthing condition, which is illustrated in Figure 4.3(B), a lateral velocity of 0.25 ft. per second and reduction coefficient of 0.56 were used. This means an energy transmission of 76 ft-tons, and with a 24-foot contact length a uniform loading of 9.4 kips per ft. on the fender face.

Under both conditions, the problem of distributing the energy absorption over the fender units was solved using the method of a beam on an elastic foundation.

2. Rubber Tube Fendering

Rubber tubes by their shape lend themselves very well to the fendering of rigid circular dolphins. The turning dolphin for the berthing facility referred to in example 1 is of circular sheet pile construction. It is fendered by several rows of rubber tubes draped horizontally and diagonally around the dolphin. A timber mattress is

suspended from the top of the turning dolphin to make initial contact with the ship and to transmit the load to the rubber tubes in contact with the dolphin structure. It has been found by observation of other marine installations that, without the timber mattresses, ships will exert such tremendous rubbing forces on the rubber tubes that they will in some cases be torn, or the suspending chains or cables ripped off.

3. Steel Springs

An offshore berthing facility consisting of a central breasting platform and two mooring dolphins on each end was constructed in 1957 for Caltex Pacific Petroleum in Sumatra (Ref. 94). The facility is located in about 60 ft. of water and is oriented parallel to the thread of the current. The range of tides is about 10 ft. and tidal currents frequently run at 3 knots. Two 50,000 dwt. tankers can be berthed simultaneously, one berth at each side.

The breasting platform and mooring dolphins are timber deck steel structures supported on steel pipe piles. Energy absorbing fender panels,designed to accommodate a 50,000 Dead Weight Tons tanker berthing with a velocity component of 0.27 ft. per second normal to the fenders at instant of impact, are provided. Each fender panel has four 40-ton steel springs and each spring assembly consists of three

concentrically-mounted helical steel spring coils which can be compressed to a maximum of 13 inches. The panels are constructed of H-piles interconnected by steel wales and struts and are faced with hardwood rubbing strips.

4. Prestressed Concrete Gravity Fender

The support of a pier head for an oil terminal at Thames Haven, England is provided by three dolphins, each consisting of three parallel frames of rigid construction (Ref. 93). The legs of each frame are hollow reinforced concrete cylinders of 8'-3" outside diameter and 4½" wall thickness. The transverse member connecting each pair of cylinders is a prestressed concrete box beam 40' long, 9' wide and 8'-6" deep. The dolphins are interconnected by five parallel prestressed concrete I beams, each 52' long, on which are laid 4" precast slabs 9' long and 2' wide.

The energy absorption capacity for this very rigid berthing facility is provided by six gravity-operating, suspended fenders -- i.e. two for each dolphin. Each fender is a prestressed concrete box, 48' long, 7'-6" wide, 14' deep at the ends and 6' at the middle, and weighs 56 tons in air and 30 tons when immersed in water.

Each of the fenders is suspended below the deck of the dolphins by four 2¼" diameter chains in such a position that they project 6' in front and 2' at the back as shown in Figure 4.4.

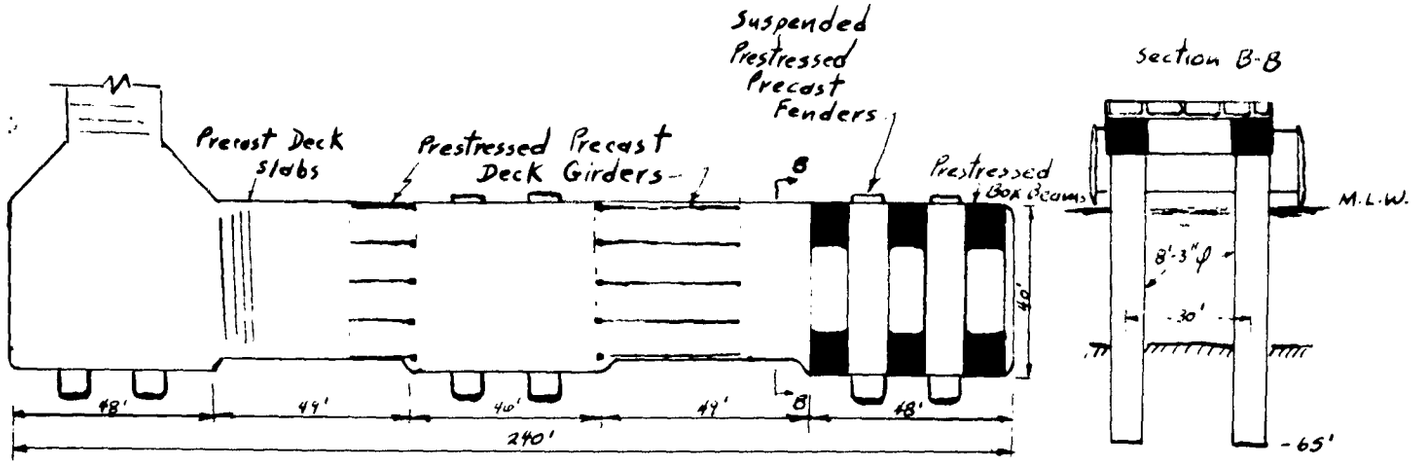

PLAN

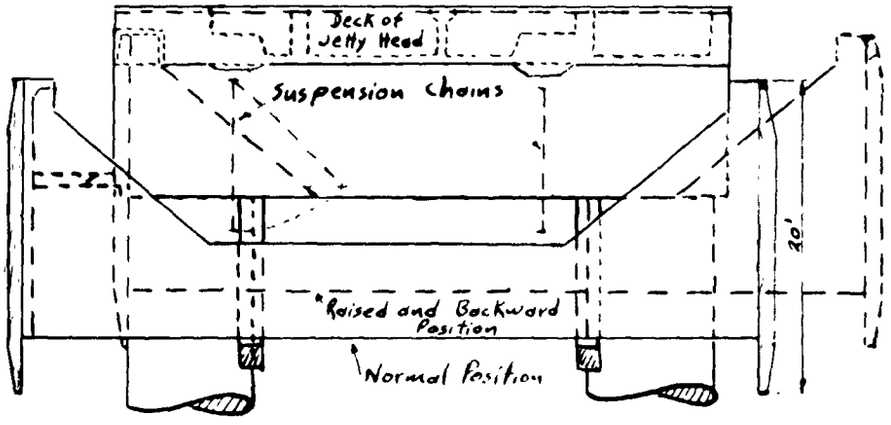

DETAIL showing action of fenders.

DOLPHINS WITH PRESTRESSED GRAVITY FENDERS

Figure 4.4

When struck by a vessel the fender moves inwards and upwards according to the gravity fender principle. The energy absorption of each fender when immersed is 90 ft-tons. The total energy absorption capacity provided by all six fenders is 540 ft-tons or 6480 in-tons. The fenders were cast on the dolphins in steel forms. After prestressing they were lowered by chain blocks and then suspended below the deck. Timber rubbing pieces are provided at each end.

5. Retractable Fender

A flexible dolphin structure that has been proposed for berthing and mooring supertankers uses a gravity type fender system for additional energy absorption (Ref. 85).

The dolphin consists of four 48" diameter high tensile steel cylinders, having a maximum wall thickness of $1\frac{1}{2}$". The four cylinders are spaced 40 ft. on centers and interconnected by a frame, brace and waler system as shown in Figure 4.5(a). Brackets are attached to the walers at 10 ft. intervals to support a fender system along each side of the dolphin and around the curved ends.

The basic design criteria for the dolphin are as follows:

Displacement of ship	-	135,000 gross tons
Water depth	-	50 ft. at mean low water
Tidal range	-	16 ft.
Angle of approach	-	10°

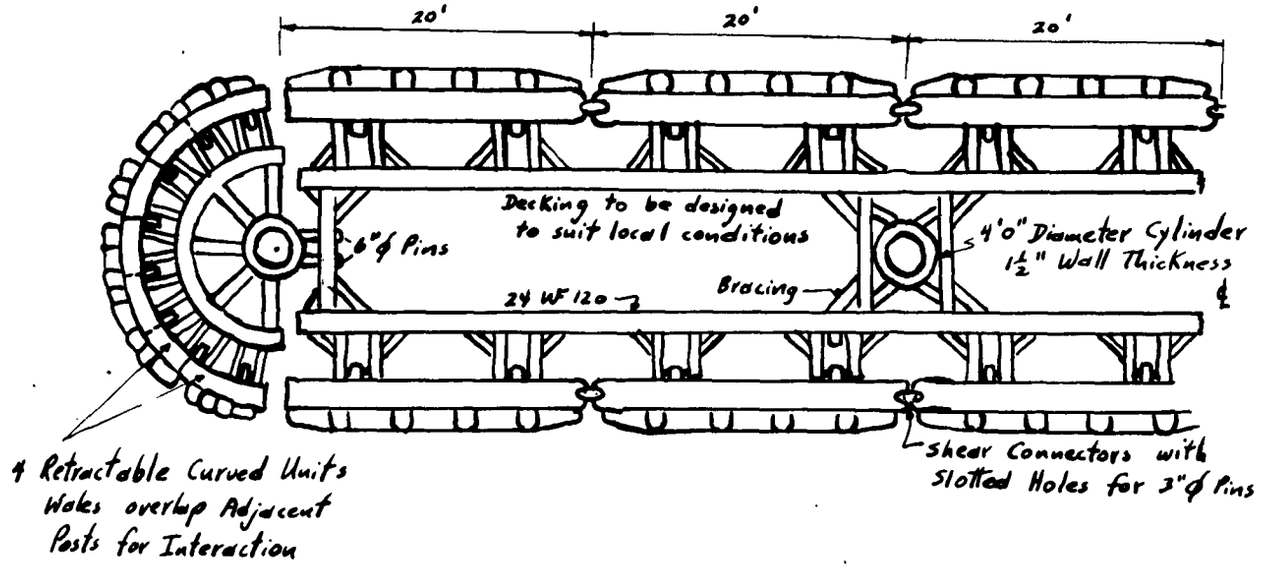

(a). BREASTING DOLPHIN PLAN

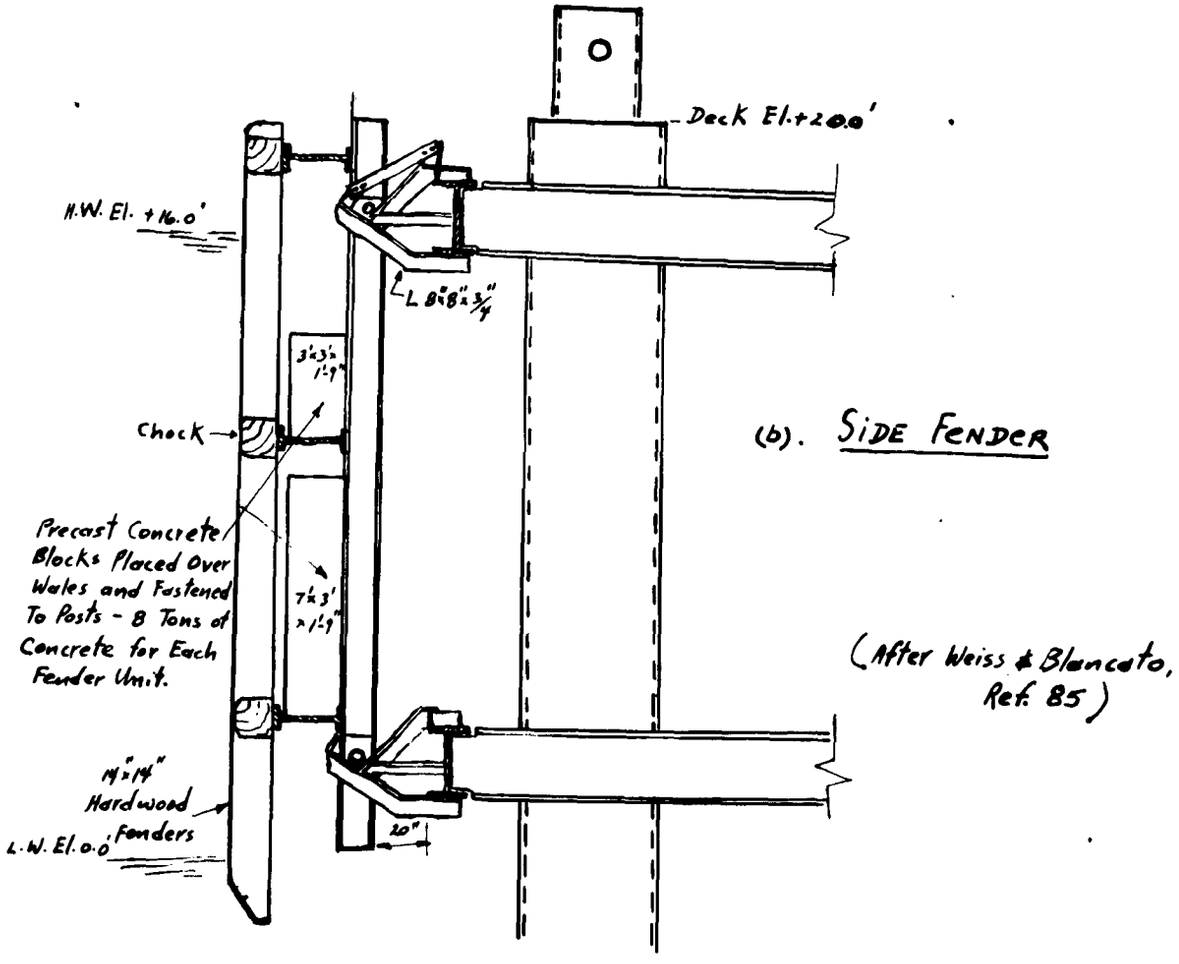

(b). SIDE FENDER

(After Weiss & Blancato, Ref. 85)

Figure 4.5

Berthing velocity	-	2 knots
Velocity of approach normal to dolphin	-	0.588 ft. per sec.
Reduction coefficient	-	0.65
Fender pressure on ship's hull	-	6 kips per ft.
Effective energy to be absorbed	-	6,350 in-tons

The berthing forces are assumed distributed to the four cylinders acting as free cantilevers. The total energy absorption capacity of the four cylinders is 2,860 in-tons, leaving 3,495 additional in-tons of impact energy to be absorbed by the fenders.

The retractable fender system used in this design is based essentially on a gravity principle but provides additional energy absorption qualities as a result of friction between the fenders and brackets. Each fender unit weighs 37 kips and has an energy capacity of 685 in-tons. The six units give a total of 4,110 in-tons, making the total resultant energy absorption capacity for the dolphin about 6,950 in-tons.

Figure 4.5(b) shows a unit of this retractable fender system which is an adaptation of a retractable system developed at the New York Naval Shipyard. The fender system, as designed, is capable of absorbing approximately 75% of the berthing energy for a supertanker of 135,000

gross tons. The use of a rigid design in this same design would require cylinders of an uneconomical diameter to provide the necessary energy absorption capacity. The increase in cost would be appreciable. Furthermore, with a rigid fender system, pressures in excess of 6,000 pounds per linear foot would be exerted on the ship's hull and this would not be acceptable.

6. Floating Stage with Floating Pontoon Dolphins

A major oil terminal for handling 65,000 dwt supertankers was recently completed at Tranmere, England (Ref. 92). The scheme for berthing and mooring of the ships -- two can be accommodated simultaneously -- incorporates two 366 ft. long floating stages and twelve "floating" dolphins. This rather unique design evolved from the fact that a 30 ft. tidal range must be contended with, which together with a 30 ft. pumping differential on the tankers would have meant a vertical movement of up to 60 ft. between a fixed berth and the ships moored alongside.

Each floating stage acts as a gravity fender capable of absorbing the energy of a fully-loaded supertanker berthing at an assumed lateral velocity component of 9 inches per second, which is equivalent to a kinetic energy absorption of 5,520 in-tons. Each stage can move horizontally some 16 ft. during berthing of a ship.

Three heavy Mannesman tubes are placed at each end of the landing stages. The connections between stage and tubes are 150 ft. long steel lattice booms, attached suitably to allow for vertical tidal movements. A counterbalance system provides a progressive increase in resistance to backward movement of the stage during berthing operations.

The plan and typical cross-section shown in Figure 4.6 illustrates the main features of the dolphins. A prefabricated sectional steel pontoon encircles a 5'-5" Mannesman tube. The pontoon which is also free to rotate rides up and down on the tube with the tide, on reinforced laminated nylon rollers. Six mooring bollards are installed on each dolphin which can withstand a total pull of 150 tons applied at an angle of 20° with the horizontal. The whole stage anchorage system is designed to withstand 375 tons of static horizontal force, which would be caused by a gale blowing on the beam of a large tanker in ballast.

The heaviest of the high tensile steel tubes weighs approximately 100 tons and is some 120 ft. long.

Each tube has been sunk and concreted into 6 ft. diameter holes bored 30 ft. deep into sandstone rock.

Timber fendering is provided all around each dolphin to make them suitable for a motor launch to approach and tie up.

FLOATING PONTOON DOLPHIN

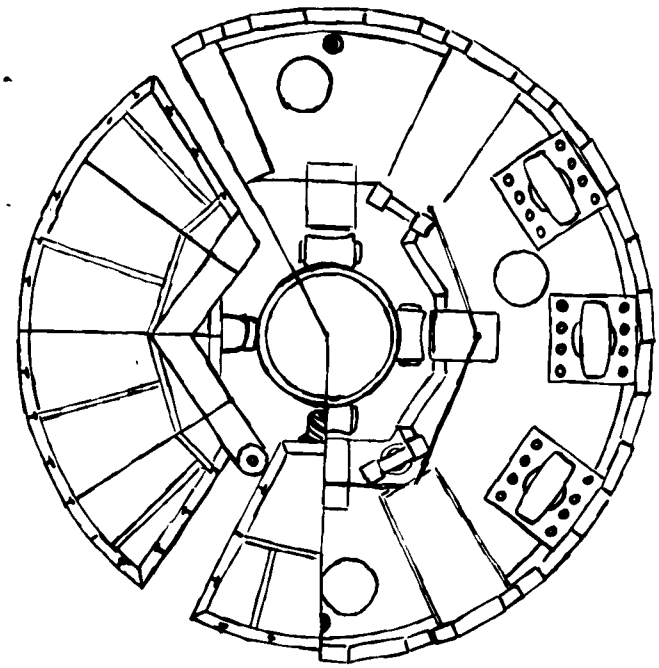

SECTIONAL PLAN

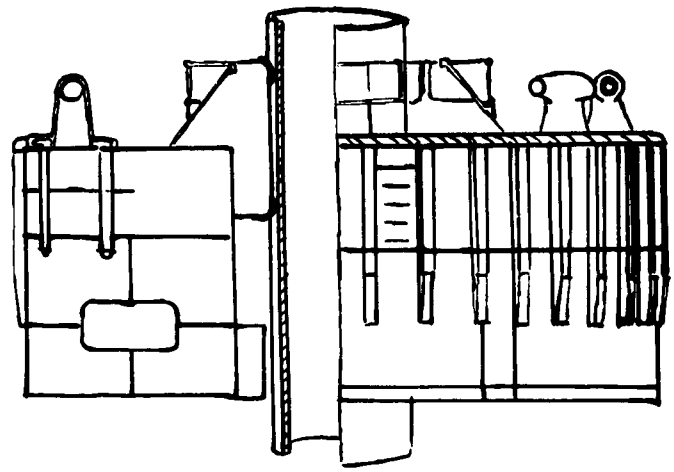

SECTIONAL ELEVATION

Figure 4.6

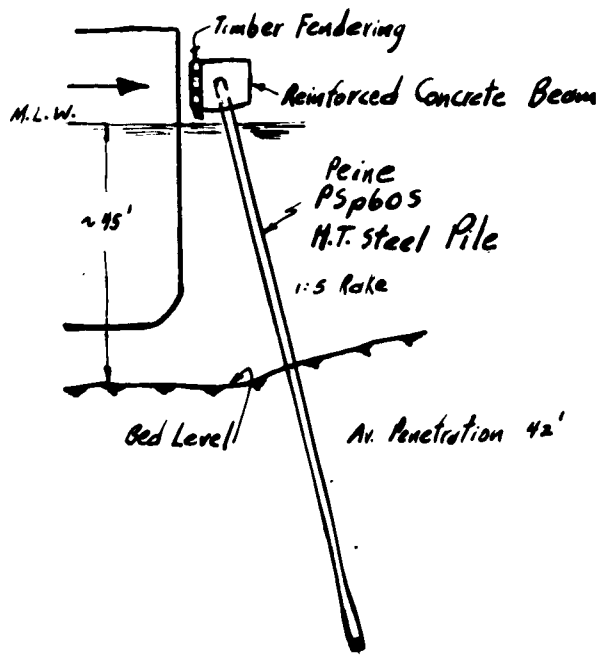

BERTHING BEAM

Figure 4.7

The dolphins have proved to be as effective as anticipated as regards movement of the floating pontoons up and down and around the tubes in varying tidal and mooring conditions. In less than one year's operation however, the nylon rollers have shown excessive wear and it is planned to replace them with cast-iron rollers with a bonded rubber surface.

7. Berthing Beam

A fender system capable of berthing vessels of 43,000 tons displacement without the aid of tugs, and 59,000-ton vessels with the aid of tugs, was installed in 1955 by the Shell Petroleum Co. at Singapore (Ref. 61). A similar one was later installed at Jamaica.

Having regard to a maximum energy figure of 3720 in-tons which corresponds to the kinetic energy of a 59,000-ton vessel traveling at 0.59 ft. per sec., and to a desire to give full protection throughout the length of the berthing face, a flexible structure, called a berthing beam, was designed to act as a fender itself.

The berthing beam consists of a row of raking high tensile steel box piles driven along the line of the berth, laced together and loaded at their heads by a very rigid and heavy reinforced concrete beam which gives an initial forward deflection to the piles. The beam itself provides the berthing face and when struck it distributes the blow to

all the piles which are thereupon pushed back from their forward deflection, through their position of zero deflection, and finally to a position of maximum backwards deflection, at which point all the energy is absorbed. Figure 4.7 shows the essential outline of the design. A length of 240 ft. was used which is slightly in excess of the length of the straight portion of tankers likely to use the berth.

The berthing structure has a calculated energy absorption capacity of between 3440 and 8820 in-tons, depending on where the blow is struck and the state of the tide. This is of course substantially greater than most single fender units. Assuming that the structure will have to absorb only 40% of the total kinetic energy of the ship, the speeds of approach of various sizes of ships which the beam can safely resist are as follows:

Vessel	End Blow	Center Blow
20,000 ton displacement	1.52 fps	2.28 fps
43,000 " "	1.04 fps	1.57 fps
59,000 " "	0.89 fps	1.34 fps

At least some of these approach speeds can be considered as being in the accident class.

Alternative designs including flexible dolphins and rigid dolphins with gravity fenders were ruled out because

of requirements for a continuous berthing face and rapid construction. The berthing beam was constructed very quickly and at low cost without any special plant. To date, it has performed very well and with some margin of safety for the accident class of berthing incidents which have occurred and are inevitable, from time to time.

Due to the probable development of hairline tension cracks in the reinforced-concrete beam (with consequent corrosion of reinforcing steel and spalling of concrete), it is suggested that the beam be prestressed.

CHAPTER V

PROTECTION AGAINST DETERIORATION

A. Steel Dolphins

1. Corrosion Effects and Causes

Dolphins constructed of steel in a salt-water marine environment are subject to deterioration by severe corrosion. The effect of corrosion on an unprotected steel sheet pile under such conditions is illustrated by Figure 5.1 which was plotted from data collected during tests conducted at Harbor Island, North Carolina, and reported by Larrabee (Ref. 28). It will be noted from the corrosion rate curve of Figure 5.1 that losses in thickness are a maximum in the zone from the high tide line to an elevation about two feet above it. This zone, often referred to as the "splash zone," is continually wetted by splash and spray. Corrosion rates as high as 40 mils per year were measured on bare steel coupons suspended in the splash zone in the Gulf of Mexico (Ref. 13). Some of the factors which contribute to high rates of corrosion in the splash zone have been listed by Munger (Ref. 48) and are:

(1) continuous exposure to splash and sea water spray;

(2) salt precipitation by wetting and drying action;

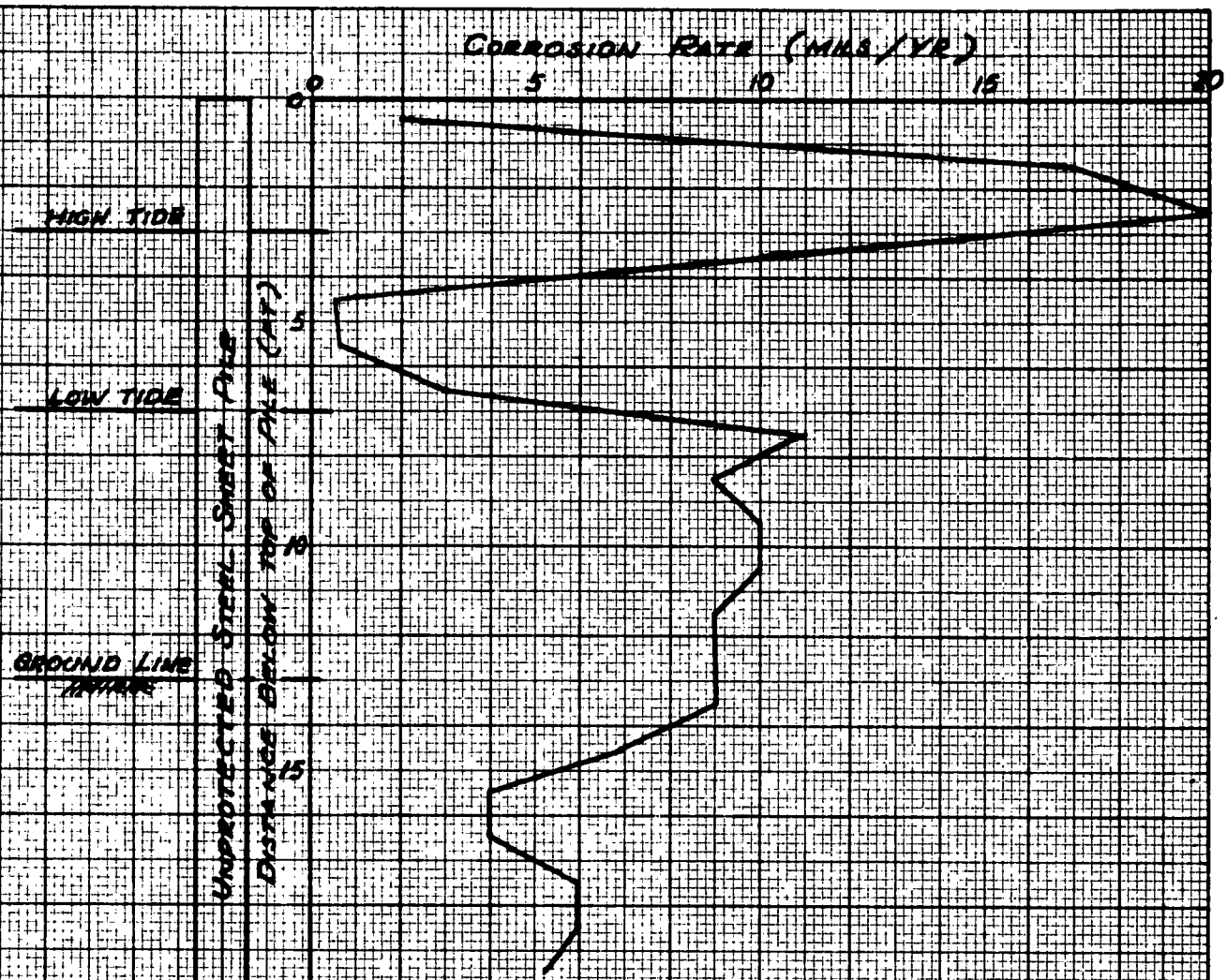

Figure 5.1
AVERAGE CORROSION RATES OF UNPROTECTED STEEL PILING IN SEAWATER FOR 5 YEAR PERIOD
PLOTTED FROM DATA COLLECTED DURING TESTS AT HARBOR ISLAND, N.C., REPORTED BY LARRABEE ( ).

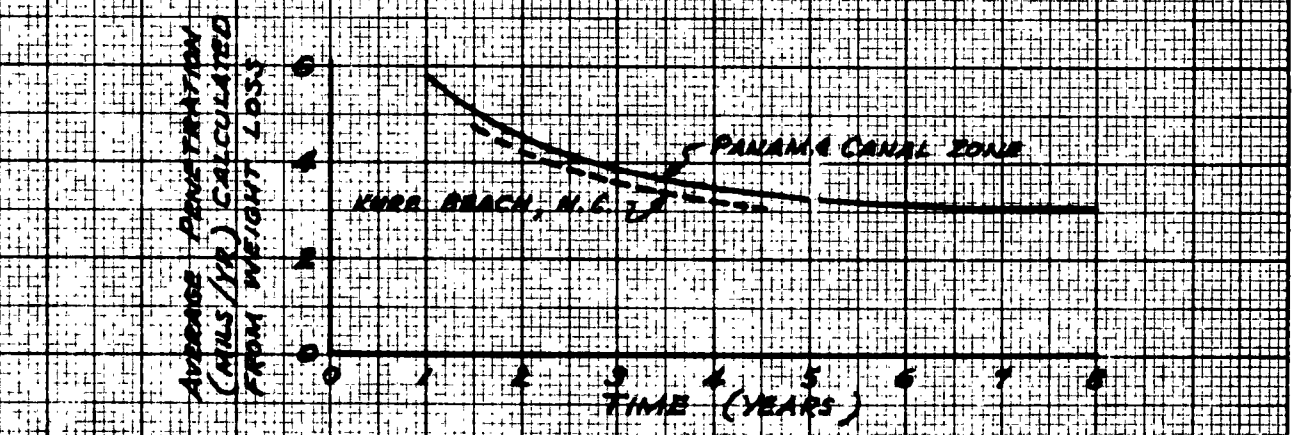

Figure 5.2
CORROSION RATE VS. TIME FOR STEEL CONTINUOUSLY IMMERSED IN SEAWATER
AFTER FORBESON, ET AL ( )

(3) constant exposure to moisture-saturated air;

(4) moisture condensation on metal surface when metal temperature is lower than the dew point -- usually from mid-afternoon on;

(5) daily expansion and contraction of the metal due to temperature variations when exposed to sunlight part of the day.

In the splash zone and the zone above it, it is considered that corrosion occurs by a mechanism not unlike the electrochemical corrosion mechanism characteristic of the continually immersed zone. It has been demonstrated by experiments that at relative humidities above a critical value of 58 percent, the corrosion rate of steel having particles of sodium chloride on its surface becomes severe (Ref. 18). Presumably this critical value represents the humidity above which the hygroscopic salt particle system is able to collect sufficient water from the atmosphere to allow corrosion to proceed by an electrochemical process.

Of interesting significance is the comparatively low rate of corrosion shown by Figure 5.1 at the mid-tide zone. Humble reported that at high tide, steel surfaces below the low tide level were anodic to that portion of the same steel member in the tidal zone (Ref. 28). This difference in potential results in an acceleration of the attack

on the steel below the low tide level and a partial protection of the surface in the tidal zone.

While an explanation of the electrochemical process of corrosion characteristic of immersed conditions and conditions below the mudline in permeable soils is considered to be unnecessary, a brief discussion of the less familiar bacteriological corrosion is in order. Severe bacteriological corrosion can occur in some impermeable water-logged clays which are anaerobic in character. The cause of such corrosion was first explained by the Dutch scientist, Von Walzögen Kuhr, who identified at the metal interface a species of bacteria which could reduce sulphates in the presence of iron, converting them into sulphides. The oxygen made available through this reduction removes the protective hydrogen formed on cathodic areas, thus allowing corrosion to continue. Anaerobic clays are mostly grey-blue in color as opposed to the rich yellow-brown of the aerobic clays (Ref. 46).

The corrosion rate of steel immersed in sea water decreases with time as corrosion products and marine growths form protective films on the metal surface. Figure 5.2 illustrates rate-time curves resulting from tests at Kure Beach, North Carolina and the Panama Canal Zone (Ref. 19). It is interesting to note that while one location is of temperate climate and the other tropical, the corrosion

rates are about the same. Apparently, the increase in corrosion rate which might be anticipated with the higher temperature of tropical waters is mitigated by other factors, possibly increased marine fouling in the tropical waters. Under conditions where protective films are not allowed to form on the steel surface because of abrasion by moving parts or current-driven sand and silt, no decrease of corrosion rate with time can be expected. Severe deterioration can occur under such circumstances.

Other parameters which determine the corrosion rate of steel immersed in sea water are water depth, salinity, pollution, velocity of current, wave action, and sand or silt content.

2. Corrosion Protection

Protection against corrosion has been the subject of extensive efforts by engineers and scientists for many years. Corrosion protection methods are many and varied, and only those which are considered to be applicable to dolphins will be presented in the following discussion. Even though cathodic protection has been developed into an effective and practical corrosion protection system for steel marine structures below water level, it is doubtful that the method will be used extensively on individual dolphins.

(a) Protective Coatings. Protective coating systems are most applicable to the dolphins for protection both above and below water level. Munger (Ref. 48) has listed the characteristics of the ideal coating system:

(1) Resistance to continuous immersion, continuous wetting and drying, and possession of low water adsorption and moisture vapor transfer rates.

(2) Resistance to ionic transfer and performance as a barrier to the penetration of chloride, sulphate, carbonate or similar ions which start underfilm corrosion.

(3) Strongly dielectric to resist the passage of any electrons which might exist from anodes set up in breaks in the coating.

(4) Highly weather resistant.

(5) High degree of chemical resistance to continuous salt exposure and petroleum products.

(6) Strongly adherent.

(7) Abrasion resistant.

(8) Inhibitive so that the coating material tends to minimize the effect of breaks in the coating.

(9) Ease of application.

(10) Ease of touch-up.

In addition, the ideal coating system should be economical.

The most important phase in application of any coating system is that of preparing the metal surface. All millscale must be completely removed from the metal surface prior to the application of protective films. Scale left in place beneath coatings is known to loosen or pop off due to moisture penetration of the coating and temperature variations. The desirability of applying coatings over bare descaled surfaces is clearly demonstrated by the results of a number of comparative tests (Ref. 18). Millscale can be effectively removed by pickling, flame cleaning, or sandblasting. Wire brushing is inadequate. Descaled surfaces corrode rapidly, and the application of protective films must succeed cleaning immediately. Some of the most important research in coating technology has been conducted by the petroleum industry in connection with the protection of offshore drilling platforms. Good results have been obtained on drilling platforms with some of the more recently developed coating systems described below:

(1) Catalyzed epoxy coatings have been proven to be reasonably effective when applied in thicknesses of at least 10 mils. They have excellent properties of cohesion and adhesion.

(2) Vinyl mastic systems consisting of a wash primer, two coats of vinyl mastic and two coats of vinyl seal with final thicknesses of 12 to 20

mils have been proven to be very effective. Tests however have indicated that vinyl mastic systems tend to lose adherence if cathodic protection is applied (Ref. 73).

(3) Chlorinated rubber mastic systems consisting of a primer, a tie coat, three coats of mastic, and one or more coats of chlorinated rubber topcoat with final thicknesses of 15 to 20 mils have been proven to be effective.

(4) Zinc-lead-silicate, an inorganic coating, applied in thicknesses of 2 to 4 mils has proven to be very effective. It is reported to have excellent splash zone resistance, showing no tendency to chalk, check, or lose adhesion. It is said to be very hard, strongly adhesive, and abrasion resistant. Because of its zinc content, it is inhibitive and assists in protecting abraded areas. Test results at the Battelle Memorial Institute, Daytona Beach, Florida reportedly show that this coating has withstood tidal immersion over a five-year period with no film destruction. Continuous immersion tests showed scattered pitting after two years. Excellent protection under marine atmospheric conditions has been experienced thus far in tests now running for periods of up to eight years. (See Appendix E for summary of test results.)

(5) Composite zinc-lead-silicate/vinyl systems consisting of the basic coating described above overcoated with a primer and a vinyl topcoat have proven to be very effective. Test results at the Batelle Institute (Appendix E) reportedly show that this system is unaffected after over three years of continuous immersion.

Further information on these and other recently developed protective coatings is available in References (1), (48), (13), and (35).

The success of any coating system as a long-term means of corrosion protection is to a great extent dependent upon proper surface preparation, application, and touch-up. Specifications for the coating of steel dolphins should be of the most rigid type, and close inspection of the coating materials and process should be carried out to assure compliance.

Steel piling coated with from 1½" to 2" of gunite applied over welded wire mesh have been shown to be corrosion resistant provided the integrity of the coating is maintained through the handling and driving process. Gunited H-piles are reported to have been driven in single lengths up to 160' without damage (Ref. 12). The mesh is usually held at about one inch from the pile surface by studs, and angle shear connectors welded to the pile prevent slipping of the

pile within the coating. If cracking occurs in the gunite coat, failure is rapid and progressive as the growing corrosion product on the metal surface forces additional cracking and spalling.

(b) Over Design. Ample defense against corrosion is sometimes provided by simply choosing sections sufficiently larger than those required by elastic design. While such measures would adversely affect the flexibility of elastic dolphins, they can be applied in some instances where mechanical abrasion would render protective coating systems ineffective.

(c) Special Splash Zone Protection. Gunite, concrete encasement, and monel and wrought iron sheathing have all been used to combat the excessive corrosion rates characteristic of the splash zone. Usually such measures are applied from the top of the splash zone to about 2 feet below mean low water. Concrete encasement is accomplished after driving a pile using a metal form having a bottom opening which matches the shape of the pile. Reinforcement of wire mesh or bar cages is usually provided, and concrete is placed by the pre-packed or the tremie method. In some instances the form is left in place as protection for the concrete jacket. This practice has the disadvantage that inspection of the concrete jacket is practically impossible, and voids may go undetected.

(d) Special Steels. Particularly good corrosion resistance in the splash zone was obtained in tests at Harbor Island, North Carolina, with a low alloy nickel-copper-phosphorus steel (Ref. 28). Steel with 0.5% Ni, 0.5% Cu, and 0.12% P showed corrosion rates in the splash zone about one sixth of those experienced with ordinary structural steel. Corrosion effects under continuously immersed conditions were about the same for the Ni-Cu-P steels as those for ordinary steel. At this writing, the authors are unaware of any Ni-Cu-P steels yet commercially available.

(e) Protection Through Design. Attention to the elimination of exposed corners and crevices in steel structures can improve overall corrosion resistance. Round members with smooth welded joints have in general shown best resistance on offshore drilling platforms. H-sections corrode most rapidly on their flange tips, reducing their strength more rapidly than comparable corrosion rates reduce the strength of cylindrical sections.

B. Dolphins Constructed of Concrete

Concrete exposed to a sea water environment is subject to deterioration by chemical attack, abrasion, freezing and thawing, and to a much lesser extent, marine borers. Failures of concrete in sea water have been traced chiefly to corrosion of reinforcing steel, which causes progressive

cracking and spalling of the concrete. Basically, the best defense against all the mechanisms of attack on concrete is in initially providing high quality, impermeable concrete. Research by various agencies and experience have demonstrated that the following basic rules must be observed to produce concrete that will maintain its integrity through long periods of exposure to a marine environment.

(1) Use Portland cement. Type V, sulphate resisting cement is recommended (Ref. 57).

(2) Use structurally sound aggregates of low porosity, unaffected by sea water.

(3) Strict control of mixing water must be observed, using a maximum of 5½ gallons per sack of cement, including water entering the mix as free moisture on the aggregates.

(4) The mixture should contain not less than 7 sacks of cement per cubic yard of concrete.

(5) The mixture should contain not less than 3% nor more than 6% of entrained air.

(6) The maximum size of aggregate should not be larger than one-sixth the narrowest dimension of the member, but in no case larger than 1½" except in plain concrete in mass sections.

(7) Within the tidal range, provide 3 inches of protective cover over reinforcement except at

corners where 4 inches of cover should be provided.

(8) Metal chairs for support of reinforcement must not extend to the surface of the concrete.

(9) Form ties should provide deep recesses in the concrete which should be carefully filled and pointed with mortar.

(10) Avoid construction joints wherever possible, especially within the tidal range.

(11) Use high frequency vibrators during placement.

(12) Cure by keeping the concrete surface continuously wet for a minimum period of 7 days at a temperature above 50° F.

Once it is assured that precast concrete members are made of quality concrete, the assurance of future durability is dependent upon proper handling and construction techniques. Special care of concrete piles is necessary to prevent the introduction of tension cracks during handling and driving. Overdriving must be avoided.

Reinforced concrete piles are not suited for use in energy absorbing dolphins because cracking of the concrete associated with the relatively large deflections required for energy absorption would render the pile surface permeable to sea water and promote corrosion of the tensile reinforcing

steel. Prestressed concrete piles which maintain compression over the entire pile cross-section during deflection do not share this disadvantage.

C. Dolphins Constructed of Timber

The deterioration and preservation of timber piles has been treated extensively in the literature for over a century. Of necessity only a very brief introduction to the subject is included in this thesis. Timber pile dolphins are subject to deterioration through marine borer attack, decay, insect attack, and mechanical abrasion. Damage of timber dolphins by fire seems to be remote. Even though much research effort has been expended in an effort to develop a more effective method of preserving timber piles for use in a marine environment, treatment with creosote or creosote/coal tar solutions remains the most popular and practical means. Properly treated timber piles have a life expectancy under marine conditions of from 5 to 10 years in the tropics and from 15 to 30 years in temperate zones depending upon the extent of local marine borer infestation. The following basic rules are recommended for application to timber pile treatment and construction procedures:

(1) Select raw piles free from bends, large knots, shakes, splits, and decay with uniform taper and bark removed.

(2) Store piles properly, preventing warping and decay.

(3) Have piles pressure treated with creosote by the full cell process. A. P. Richards (Ref. 60), Director of the W. F. Clapp Laboratories, Duxbury, Massachusetts, has recommended treatment with solutions of 70% creosote/30% coal tar for marine piles, with example minimum retentions of 16 pounds per cubic foot for Douglas Fir and 20 pounds per cubic foot for Southern Yellow Pine. He further recommends that all piles in a treatment charge be rejected if more than 10% of them have less than the minimum retention. Close inspection of the treatment process must be carried out.

(4) Handling with hooks or devices which penetrate the surface of treated timber must not be allowed.

(5) Timber piles must not be overdriven.

(6) After cutoff, pile butts must be thoroughly penetrated with preservative and sealed.

(7) All abraded areas must be adequately penetrated with preservative after driving.

(8) All connection holes and slots cut after pressure treatment must be field treated with preservative. (Cutting after treatment should be kept to a practical minimum.)

Some woods, notably greenheart from British Guiana, have a high natural resistance to the various destructive agencies common to a marine environment, and perform well without treatment. In general, their records are excellent in temperate waters, and fair in tropical waters. Reference (12) indicates a large number of examples of service experienced in various parts of the world with a number of naturally resistant woods.

Mortar-coated timber piles were successfully used in pier construction on the California coast during World War II. Treatment consisted of pneumatically applying 1½" of sand cement mortar over 2" x 2" welded wire mesh held at a distance of 3/4" from the pile. The mesh was overlapped a distance of 6". Four-inch square shear pockets, 18" on centers, were cut into the timber pile surface to prevent slipping of the pile within its protective jacket. Only that portion of the pile above the permanent mudline was treated. It is essential that possible scour conditions which will lower the mudline be anticipated when selecting the point of jacket termination. It was reported that no appreciable damage occurred during handling and driving the mortar-coated piles after a curing period of only 3 days. It is important to note that jackets of this type may adversely affect the flexibility-strength relationship of shock-absorbing timber dolphins.

Concrete jackets cast after driving have been used to protect timber piles, but their application to timber pile dolphins appears to be impractical.

Expendable timber rubbing strips should be provided to prevent direct abrasion of ships on timber piles and consequent damage to their jacketed or chemically treated surfaces.

D. Maintenance

Regardless of the materials of which a dolphin may be constructed, proper maintenance is essential to assure maximum useful life. Toward that end, dolphins should be frequently inspected, and defective elements of the dolphin should be promptly repaired or replaced before further deterioration allows damage to be incurred to a ship or before major repairs of the dolphin are necessary.

CHAPTER VI

CONCLUSIONS

A. General

1. Dolphins do not lend themselves to standardization because of the variety of purposes which they serve and the wide variation in site conditions.

2. The realistic evaluations of energy absorption requirements, lateral loads and soil conditions are the governing criteria for design of dolphins.

3. Dolphins should be designed primarily to protect ships and secondarily to protect marine structures. A dolphin which remains undamaged after inflicting severe damage to a vessel is improperly designed.

4. The deterioration and preservation of materials in the marine environment should be given proper attention during the design phase.

5. Soil mechanics is a very important part of dolphin design. Hence the design of all dolphins must be preceded by an adequate investigation of the soil properties at the construction site. For pile dolphins it is possible to calculate the bearing or pull-out capacity of the piles, and their resistance to static lateral loads can be calculated satisfactorily by the Blum method. This method may be inaccurate for short-term loading, and more work should be

done on this subject. It is not possible to do more than roughly estimate the maximum allowable repeated lateral load. There is a pressing need for many more carefully controlled lateral loading tests on piles.

6. For dolphin structures used for berthing, steel, especially high strength steel, and hardwoods such as oak and greenheart have the necessary characteristics of formability, strength, resiliency and durability. On the other hand, reinforced or prestressed concrete are not suitable materials unless the resiliency required for berthing is provided by means of high energy fender systems.

7. Where dolphins serve only for mooring, reinforced concrete and particularly prestressed concrete, in cellular and in open type, battered pile construction, become very satisfactory materials.

8. Timber dolphins predominate in United States ports. In Europe, due to lack of available timber and its high cost, preference is given to steel dolphins either in the form of high strength tubular piles of the Mannesman type or else those of interlocking, welded box or H-pile groups. Also popular in Europe and increasingly so in America are dolphins in the form of sheet pile cofferings filled with sand, and of reinforced or prestressed concrete cellular and battered pile structures, with and without high energy fendering systems.

9. Although the yield and ultimate strengths of structural materials under dynamic loading show considerable increases over the static strengths, the use of design stresses for impact loading on dolphins greater than 1.333 times the allowable stresses under static loading is generally not recommended. This factor is used by most structural codes in cases of wind and other short-term loads and results in a factor of safety with respect to static yield strength of about 1.2 for steel and 1.6 for wood.

B. Tubular Dolphins

1. By using dolphins made of long, slender and cantilevered elements such as high strength steel tubes, which rely for their stability on the flexibility of the piles themselves, a "soft" berth without special fendering can be attained.

2. Proper functioning of these dolphins depends on fairly homogeneous and firm soil to provide the requisite degree of fixation. Although such soil is not encountered often enough, in favorable foundation conditions, this construction offers a very simple and effective means of withstanding berthing impacts and static mooring loads.

3. Eccentric impacts on large dolphins of this type with hinged braces at the top result in a large variation between the loads exerted on different piles with a

consequent reduction in the energy absorption efficiency. To overcome this deficiency in the simply hinged braces, torsion-resisting connections may be added which have the effect of distributing the eccentric impacts more equally to the piles. The energy absorption capacity of the hinged dolphin can thus be increased by 30 to 50% through the addition of torsion-resisting connections.

4. Considerable savings in material and increased energy absorption as well as decreased impact reaction can be realized in cantilevered pile dolphins by adjusting the cross-sections of the piles according to the bending moment along the lengths of the piles. A pile of uniform strength, i.e. one whose section modulus varies as the bending moment, will absorb 50% more energy than a similar pile whose cross-section is constant. By simply driving a wood pile with its larger dimension down instead of with its smaller dimension down as is customary, the energy absorption of the pile in bending is increased by six times.

5. When driving hollow tubes, experience has shown that soil may plug the tube near the point, causing the open tube to act more or less as a closed one.

C. Dolphins of Box or H-Pile Groups

1. The wide flange sections that have been most frequently used for flexible dolphins are the high strength,

Peine sheet pile sections. Such wide flange sections are most economic with regard to energy absorption if the load on the dolphin is always from one general direction.

(a) In the case of dynamic loads, if the force acts in the most unfavorable direction, i.e. normal to the axis about which the moment of inertia is least, the resistance of the dolphin may be reduced as much as 65%.

(b) For static load, the reduction in resistance may be from 10 to 40%.

2. Where the dolphin structure is subjected to dynamic and static loads acting from various directions, the application of circular hollow piles is generally more satisfactory.

3. Dolphins of box and H-pile groups may be constructed either by driving the piles individually or by installing preassembled groups as a unit. The former method requires precision driving. The latter method may be done by jetting or by boring out the soil if the disturbance caused thereby is not detrimental to the soil, and by vibration driving if the soil is poorly compacted and non-cohesive.

4. To ensure that the pile group will act as a unit in resisting dynamic or static loads, it is recommended that the interlocks be welded for additional resistance to shear.

D. Timber Pile Cluster Dolphins

Timber dolphins could be improved by adding a superstructure to prevent ships hitting individual piles (though this would be difficult for a large tidal range), and in certain locations they could be made more effective by introducing some flexibility between the piles at the top of the dolphin.

E. Screw Pile Dolphins

Screw pile dolphins seem to give excellent service and are claimed to be quick to construct. Their structure is rigid so that a flexible fender is needed for adequate energy absorption. Their disadvantage is in their initial cost, so that it is only economical to build them in very poor soils.

F. Ring Dolphin

1. The ring pontoon dolphin has a very high kinetic energy absorption capacity.

2. It presents a fabrication and construction problem more complex than most other dolphin types.

3. It has moving parts which must be maintained to assure proper functioning of the dolphin assembly.

4. The lateral forces developed during collisions with the ring pontoon dolphin are small in comparison with those

developed during equivalent collisions with dolphins which absorb energy elastically. The resulting soft contact afforded berthing vessels is one of the dolphin's most important advantages.

5. Deflections of several feet are possible, and must be allowed for in locating the dolphin.

G. Bell Dolphin

1. This dolphin has the capability to absorb large amounts of kinetic energy.

2. Lateral thrusts developed during collisions are relatively small.

3. Moving parts must be maintained to assure proper action of the dolphin.

4. The dolphin is particularly massive in comparison to other dolphins, entailing some construction difficulty, and consequently considerable expense.

H. Sheet Pile Mooring Cell

1. This dolphin type is most applicable for use in mooring vessels in harbors with rock bottoms.

2. The resistance to horizontal loads imposed is largely dependent upon the shear resistance of the fill material.

3. Mooring cells can be made suitable for berthing ships only by installation of an adequate, energy absorbent fender system.

I. Fendering for Dolphins

1. With the increasing use of the rigid or solid type of dolphins for berthing operations, the design and application of fendering systems for such dolphins has become very important. In contrast with the flexible type dolphins which have considerable resiliency in themselves and consequently usually do not require special fendering, the rigid dolphins do not have the necessary energy absorption characteristics to safely berth ships. Highly resilient fender systems are therefore required to prevent costly damage to both ship and dolphin.

2. For a given kinetic energy of vessel, the final impact on the ship, fender, or dolphin structure is inversely proportional to the available inward movement of the fender. The travel of the fender must therefore be sufficient to ensure that the final force of impact is reasonably small in regard to the strength and stability of the dolphin structure and to the allowable pressure on the hull of the ship.

3. Fenders of the gravity type which can recede several feet are subject to much smaller horizontal forces than

spring or rubber fenders which can only recede about 15 inches. This indicates that dolphins with gravity fendering are more suitable in cases of very great energy absorption requirements.

4. In addition to horizontal forces normal to the face of the dolphin, heavy longitudinal or tangential forces must also be contended with. The fendering should either avoid receiving these latter forces by receding or rotating, or if it is not possible to do this, the strength of the rubbing strips should be such that they tear off before excessive longitudinal forces are developed in the fendering. In any event it seems reasonable to design fenders and their supports to withstand longitudinal forces equal to approximately 0.25 of the maximum normal forces.

REFERENCES

1. Alexander, A. L., and others. "Performance of Organic Coatings in Tropical Environments." Corrosion, Vol. 15, pp. 25-28, June, 1959.

2. Anderson, P. Substructure Analysis. New York, Ronald Press Co., 1948. 336 p.

3. Aspden, J. A. T. "Screw Piles." CE 511 Term Paper, Princeton University, 1961 (unpublished). 21 p.

4. Ayers, J. R., and Stokes, R. C. "Berthing of U. S. Navy Reserve Fleet." XVIII International Navigation Congress, Section II, Question 2, pp. 69-87, Rome, 1953.

5. Baker, A. L. L. "Gravity Fenders." Princeton University Conference on Berthing and Cargo Handling in Exposed Locations, pp. 97-110, October, 1958.

6. Baker, A. L. L. Paper on Fendering. XVIII International Navigation Congress, Section II, Question 2, pp. 111-142, Rome, 1953.

7. Beebe, K. E. "Mooring Cable Forces Caused by Wave Action on Floating Structures." Proceedings of First Conference on Ships and Waves, pp. 134-143, October, 1954.

8. Bernup, S. A. "Mooring Dolphins for the Harbour of Kitimat." Dock and Harbour Authority, Vol. 41, pp. 117-122, August, 1960.

9. Blum. "Wirtshaftliche Dalben forman und ihre Berechnung." Bautechnic, Heft V, 1932.

10. Callet, P. "Impact of Ships on Berthing." XVIII International Navigation Congress, Section II, Question 2, pp. 87-111, Rome, 1953.

11. Cattin, P. "Comparative Analysis of Double Wall Cofferdam Design Theories." Master's Thesis, Princeton University, 1955 (unpublished). 85 p.

12. Chellis, R. D. Pile Foundations. New York, McGraw-Hill, 1951. 681 p.

13. Robinson, R. M. "Controlling Corrosion of Offshore Platforms." Corrosion, Vol. 14, pp. 93-96, November, 1958.

14. Cummings, E. M. "Cellular Cofferdams and Docks." ASCE Journal, Waterways and Harbors Div., Vol. 83, Paper #1366, 29 p., September, 1957.

15. Czerniak, E. "Resistance to Overturning of Single Short Piles." Proceedings ASCE, Vol. 83, Structural Div., Paper #1188, 25 p., March, 1957.

16. Davidenkoff, N. N. "Allowable Working Stresses Under Impact." Transactions ASME, 56, No. 3, Paper APM 56-1, pp. 97-107, March, 1934.

17. Eggink, A. "Impact of Ships on Berthing." XVIII International Navigation Congress, Section II, Question 2, pp. 167-187, Rome, 1953.

18. Evans, U. R. The Corrosion and Oxidation of Metals. London, Edward Arnold Ltd., 1960. 1094 p.

19. Forgeson, B. W., and others. "Corrosion of Metals in Tropical Environments." Corrosion, Vol. 14, pp. 33-41, February, 1958.

20. Förster, K. "Effect of Mooring Forces on Dolphins (Kraftwirkuhgen an Stahldalben)." Der Bauingenieur, Vol. 27, pp. 346-349, September-October, 1952.

21. Gaul, R. D. "Model Study of a Dynamically Laterally Loaded Pile." Proceedings ASCE, Vol. 84, Journal S.M. and F. Div., Paper #1535, 33 p., February, 1958. Discussion SM4, No. 1828, October, 1958, and Reply SM2, No. 2011, April, 1959.

22. Glanville, W. H., et al. "An Investigation of the Stresses in Reinforced Concrete Piles During Driving." Building Research Station, Technical Paper 20, London, 1938. 111 p.

23. Gleser, S. M. "Lateral Load Tests on Vertical Fill and Free-Head Piles." ASTM Symposium on Lateral Loads on Piles, Special Publication No. 154, pp. 75-93.

24. Hansen, J. B. Earth Pressure Calculation. Copenhagen, Danish Technical Press, 1953. 271 p.

25. Illiger, H. "Die Entwicklung der Anlegestellen für die Schiffahrt Im Bereich der Schlevsen und Schiffssammeistellen des Rhein-Herne-Kanals und der Ruhrwasserstrake (Development of Dolphins and Fenders for Ship Navigation of the Rhine)." Der Bauingenieur, Vol. 28, pp. 1-12, January, 1953.

26. Joglekar, D. V., and Kulkarni, P. K. "Mooring Problems in Harbours Subject to Seiches and Tidal Bores." XIX International Navigation Congress, Section II, Communication 1, pp. 95-116, London, 1957.

27. Knapp, R. T. "Wave Produced Motion of Moored Ships." Proceedings of 2nd Conference on Coastal Engineering, pp. 48-61, Houston, 1952.

28. Larrabee, C. P. "Corrosion Resistant Experimental Steels for Marine Applications." Corrosion, Vol. 14, pp. 21-24, November, 1958.

29. Lessels, J. M. Strength and Resistance of Metals. New York, John Wiley and Sons, 1954. 450 p.

30. Levinton, Z. "Elastic Fender Systems for Wharves." Princeton University Conference on Berthing and Cargo Handling in Exposed Locations, pp. 87-95, October, 1958.

31. Lewis, E. V., and Borg, S. F. "Energy Absorption by the Ship." Princeton University Conference on Berthing and Cargo Handling in Exposed Locations, pp. 69-86, October, 1958.

32. Liemdörfer, Paul. "Berthage for Large Oil Tankers (Port of Stockholm)." XIX International Navigation Congress, Section II, Question 2, pp. 179-195, London, 1957.

33. Little, D. H. "Some Designs for Flexible Fenders" and discussions. Proceedings of the Institution of Civil Engineers, Part II, pp. 42-82, February, 1953.

34. Little, D. H. "Some Dolphin Designs." Journal, Institute of Civil Engineers, Vol. 27, pp. 48-66, 1946.

35. MacDougall, F. A. "Performance of Epoxy Resin Coatings in Marine Environments." Corrosion, Vol. 14, pp. 93-98, March, 1958.

36. Mason, Bishop, Palmer, and Brown. "Piles Subjected to Lateral Thrust." Symposium on Lateral Load Tests on Piles, ASTM Special Publication No. 154A, 44 p.

37. Matlock, H., and Reese, L. C. "Generalized Solutions for Laterally Loaded Piles." Proceedings ASCE, Vol. 86, No. SM5, pp. 63-91, October, 1960.

38. McAulty, J. F. "Thrust Loading on Piles." ASCE Proceedings, Vol. 82, Journal Soil Mechanics & Foundations Div., Paper #940, 25 p., April, 1956.

39. McGowan and others. "Oil Loading and Cargo Handling Facilities at Mina al-Ahmadi, Persian Gulf." Proceedings of the Institution of Civil Engineers, Part II, pp. 249-324, June, 1952.

40. Miner, D., and Seastone, J. Handbook of Engineering Materials. New York, John Wiley and Sons, 1955. 1 Vol. (various pagings).

41. Minikin, R. R. "Fenders and Dolphins." Dock and Harbour Authority, Vol. 27, pp. 224-228, January, 1947.

42. Minikin, R. R. Piling for Foundations. London, C. Lockwood, 1948. 196 p.

43. Minikin, R. R. Winds, Waves, and Maritime Structures. London, Griffin and Co., Ltd., 1950. 215 p.

44. Minikin, R. R. "The Port of Hamburg." Dock and Harbour Authority, Vol. 36, pp. 3-8, May, 1956; and pp. 37-42, June, 1956.

45. Minnich, H. "Torsion-Resisting Dolphin." Dock and Harbour Authority, Vol. 37, pp. 81-84, July, 1956.

46. Morgan, J. H. Cathodic Protection. London, Leonard Hill Ltd., 1959. 229 p.

47. Muller, F. "Differences Que Presente La Repartition De Tractions D'Amarres, Centrees Ou Excentrees, Sur Les Divers Pieux De Ducs D'Albe En Faisceaux De Pieux Metalliques, Suivant Que L'Ouvrage Ne Resiste Pas On Resiste A La Torsion." XVIII International Navigation Congress, Section II, Questions Pts. 1-2, pp. 5-33, Rome, 1953.

48. Munger, C. G. "Coatings for Offshore Drilling Structures." Corrosion, pp. 131-132, May, 1959.

49. O'Brien, J. T., and Kuchenreuther, D. I. "Forces Induced by Waves on the Moored U.S.S. Norton Sound (AVM-1)." Technical Memo M-129, U.S. Naval Civil Engineering Laboratory, Port Hueneme, Calif., April, 1958. 52 p.

50. O'Brien, J. T., and Kuchenreuther, D. I. "Forces Induced on a Large Vessel by Surge." Proceedings, ASCE, Waterways and Harbors Div., Vol. 84, Paper No. 1571, 29 p., March, 1958.

51. O'Brien, J. T., and Kuchenreuther, D. I. "Free Oscillation in Surge and Sway of a Moored Floating Dry Dock." Proceedings of 6th Conference on Coastal Engineering, pp. 878-894, Gainesville, 1958.

52. O'Brien, J. T. "Forces on Moored Ships Due to Wave Action." Proceedings of First Conference on Ships and Waves, pp. 455-473, October, 1954.

53. Pages, M. "E'tude Mecanique du Choc se Produisant Lors de L'accostage d'un Navire a un Quai." Annales Des Ponts Et Chaussees, pp. 178-217, March-April, 1952.

54. Palmer, L. A., and Thompson, J. B. "The Earth Pressures and Deflections Along the Embedded Lengths of Piles Subjected to Lateral Thrust." Proceedings of 2nd International Conference on Soil Mechanics and Foundation Engineering, Vol. V, Art. VII-b-3, pp. 156-161, 1948.

55. Petrie, G. W., III. "Matrix Inversion and Solution of Simultaneous Linear Algebraic Equations with the IBM Type 604." Proceedings Computation Seminar, IBM, pp. 105-111, New York, 1951.

56. Piener Kastenspundwand Handbuch. 327 p.

57. U.S. Beach Erosion Board. "Factors Affecting Durability of Concrete in Coastal Structures." Tech Memo No. 96, June, 1957. 27 p.

58. "A Prestressed Concrete Dolphin." Dock and Harbour Authority, Vol. 32, p. 340, March, 1952.

59. Raymond International. "Raymond Cylinder Piles of Prestressed Concrete." Catalog CP-3. 24 p.

60. Richards, A. P. "How To Be Sure of Treated Wood Piling." Engineering News Record, Vol. 161, No. 4, pp. 51-53, July 24, 1958.

61. Ridehalgh, H. "A Berthing Beam for Large Vessels." Dock and Harbour Authority, Vol. 36, pp. 9-14, May, 1955.

62. "Ring Dolphin." Dock and Harbour Authority, Vol. 38, pp. 110-112, July, 1957.

63. Risselada, T. J. "Dolphins at Port of Amsterdam." Dock and Harbour Authority, Vol. 35, pp. 53-56, June, 1954; and pp. 88-90, July, 1954.

64. Risselada, T. J. "Flexible Dolphins and Kindred Structures." Dock and Harbour Authority, Vol. 39, pp. 15, 49, 93, May, June & July, 1958.

65. Robertson, A. M. "Fendering, Lead-in Jetties and Dolphins." Dock and Harbour Authority, Vol. 34, pp.15-20, 25, May, 1953.

66. Rowe, P. W. "Single Pile Subject to Horizontal Force." Geotechnique, Vol. 6, No. 2, June, 1956.

67. Schneebeli, G., and Cavaille-Coll, R. "Contribution to the Stability Analysis of Double Wall Sheet Pile Cofferdams." Proceedings of 4th International Conference on Soil Mechanics and Foundation Engineering, Vol. 11, pp. 233-238, London, 1957.

68. Scofield and O'Brien. Modern Timber Engineering. New Orleans, La., Southern Pine Association, 1954. 147 p.

69. Stiffler, L. E. "Fenders and Fender Systems." Master's Thesis, Princeton University, 1955 (unpublished). 128 p.

70. Stracke, F. H. "Offshore Mooring Facilities for Tankers up to 100,000 DWT Capacity." Princeton University Conference on Berthing and Cargo Handling in Exposed Locations, pp. 157-173, October, 1958.

71. "Suspended Fenders and Dolphins." The Engineer, Vol. 181, pp. 221-222, March 8, 1946.

72. Tennessee Valley Authority. Steel Sheet Piling Cellular Cofferdams on Rock. Technical Monograph No. 75, Vol. 1, Knoxville, 1957. 281 p.

73. Ploederl, F. J. "Tests Show Most Coatings Blister Under Cathodic Protection." Corrosion, Vol. 14, pp. 105-106, October, 1958.

74. Tschebotarioff, G. P. Soil Mechanics, Foundations, and Earth Structures. New York, McGraw-Hill, 1951. 655 p.

75. Tschebotarioff, G. P. "The Resistance to Lateral Loading of Single Piles and of Pile Groups." ASTM Symposium on Lateral Loads on Piles, Special Pub. #154, pp. 1-11.

76. U. S. Beach Erosion Board. Large Scale Tests of Wave Forces on Piling, TM 111. 9 p.

77. U. S. Navy Bureau of Yards and Docks. Mooring Guide. Vol. 1, TP-Pw-2, March, 1954. 98 p. & Appendices.

78. U. S. Navy Bureau of Yards and Docks. Waterfront and Harbor Facilities. TP-Pw-8, Washington, D.C., 1954. 110 p.

79. Van Rijsselberghe, L., and Descans, L. "Ducs D'Albe en Pal Plances Metalliques - Application au Port de Zeebrugge." Annales des Travaux Pubics de Belgique, Vol. 52, p. 423, June 3, 1951.

80. Vasco Costa, F. "Elastic Dolphins of Uniform Strength." Dock and Harbour Authority, Vol. 40, pp. 268-269, January, 1960.

81. Visioli, F., and others. "Impact of Ships on Berthing." XVIII International Navigation Congress, Section II, Question 2, 193 p., Rome, 1953.

82. Visioli, F. "Impact of Ships on Berthing" (General Report). XVIII International Navigation Congress, Section II, Question 2, pp. 1-13, Rome, 1953.

83. Volse, L. A. "Docking Fenders: Key to Pier Protection." Engineering News Record, Vol. 160, May 8, 1958.

84. Walton, W. H. Mechanical Properties of Non-Metallic, Brittle Materials. N.Y., Interscience Pub., 1958. 492 p.

85. Weis, J. M., and Blancato, V. "A Breasting Dolphin for Berthing Super-Tankers." Journal, ASCE, Waterways and Harbors Div., Vol. 85, Pt. 1, pp. 183-195, Sept., 1959.

86. White, L., and Prentis, E. A. Cofferdams. New York, Columbia University Press, 1950 (2nd ed.). 311 p.

87. Wiegel, R. L., Beebe, K. E., and Dilley, R. A. "Model Studies of the Dynamics of an LSM Moored in Waves." Proceedings of the 6th Conference on Coastal Engineering, pp. 844-877, Gainesville, 1958.

88. Wiegel, R. L., Beebe, K. E., and Moon, J. "Ocean Wave Forces on Circular Cylindrical Piles." Proceedings ASCE, Vol. 83, Hyd. Div., HY2, Paper #1199, 36 p., April, 1957.

89. Wilson, B. W. "The Energy Problem in the Mooring of Ships Exposed to Waves." Princeton University Conference on Berthing and Cargo Handling in Exposed Locations, pp. 1-67, October, 1958.

90. Wilson, G. "Bearing Capacity of Screw Piles." Journal of Institute of Civil Engineers, Vol. 34, pp. 4-73, March, 1950.

91. Reeves, H. W. "Marine Oil Terminal for Rio De Janeiro, Brazil." Journal ASCE, Waterways and Harbors Div., Vol. 87, pp. 47-73, February, 1961.

92. "Oil Tanker Accommodation at Tranmere." Dock and Harbour Authority, Vol. 40, pp. 220-221, November, 1959.

93. "Prestressed Concrete Gravity Fender for Oil Terminal at Thames Haven." Dock and Harbour Authority, Vol. 33, pp. 203-206, November, 1952.

94. Silveston, B. "Oil Loading Terminal for Pakning, Sumatra." Dock and Harbour Authority, Vol. 40, pp. 329-332, March, 1960.

95. McCammon, G. A., and Ascherman, J. C. "Resistance of Long Hollow Piles to Applied Lateral Loads." ASTM Symposium on Lateral Load Tests on Piles, Special Technical Publication No. 154, pp. 1-9, July 1, 1953.

APPENDIX A

Summaries of Various Tests in Connection with Dolphins and Laterally Loaded Piles

1. Torsion-Resisting Dolphins

Calculations and tests on models of torsion-resisting dolphins had shown that the energy capacity of these dolphins was not reduced when subjected to eccentric loads; whereas under similar circumstances dolphins that were not resistant to torsion lost a considerable part of their energy capacity due to unequal bending of the piles.

The German administration of hydraulic works and navigation consequently undertook, in the spring of 1952, full-scale tests of various types of dolphins which had been constructed up to that time. The tests were performed at Holtenau (on the Baltic Canal)(Ref. 47).

The dolphin types investigated were: two dolphins that were not resistant to torsion (a Mannesmann type and a Wedekind type); a dolphin of the Minnich type that was resistant to torsion; and two dolphins having wooden cross-ties. All of the dolphins had six piles, 18.5 meters long. The embedment of the piles was 7.5 meters and the top of the piles was 2 meters above the water level. The dolphins had approximately the same energy capacity of about 10 meter-tons in case of concentric load.

The tests were also made for the purpose of finding out what role was played by tangential shearing forces arising from torsion in the relatively thin-walled, hollow piles in case of eccentric loading on a torsion-resisting dolphin.

The results of the full-scale tests showed that under an eccentric load a dolphin that is not resistant to torsion loses about one third of its energy capacity; whereas, the dolphin that is resistant to torsion loses practically nothing. The loss of energy capacity for dolphins having wooden cross-ties was found to be still greater. This mainly arises from stiffness to deflection in such structures which are also very resistant to torsion. The utmost in dolphins subjected to eccentric loading therefore consists in realizing horizontal torsional resistance without reducing the flexibility of the dolphins.

With regard to the effects of tangential shear forces in the piles from eccentric loading on the dolphin, it was found that when all the piles participate in resisting torsion, the resulting tangential shearing forces can be neglected since they will be small and will not reduce the permissible tensile stresses. Consequently, the energy capacity will not be reduced by more than about 1/2%. In case of partial participation by the piles in resisting torsion, it is advisable to calculate the tangential shearing stresses.

In addition, it was ascertained from the tests that in case of uniform distribution of the total force, the deformations correspond very closely to those calculated by the method of Dr. Blum which considers the load on each pile and the width b of each individual pile. On the other hand, by making b in Blum's equations equal to the total width of the dolphin, values that are 20% to 30% too great are obtained. (The correctness of Blum's calculations of deflection, for isolated piles, had been already confirmed by large-scale tests at Flemhude in 1951.)

2. Pile Tests for Mooring Dolphins

In connection with the construction of four mooring dolphins for a new oil tanker berth in Devonport, England,* lateral load tests were performed on a pile driven in mud and on another set of piles driven partially in mud and partially in rock.

For the first test, horizontal loads were applied at a distance of 40.75 ft. above mud level, the pile penetration in the mud being 29 ft. The pile was a 70' long Larssen B.P. 3 pulled about its Y-Y axis. No data are available concerning the so-called mud. Results of the test are given in Table A-1 and show that up to the elastic limit of the

---

*See D. H. Little, "Yonderberry Point Jetty, Devonport," Dock and Harbour Authority, Vol. 35, pp. 271-274, January, 1955.

LATERAL LOAD TESTS ON DOLPHIN PILES (AFTER D.H. LITTLE D&HA JAN. 1955)

TABLE A-1

Pile Detail	Pull Tons	Deflection Inches
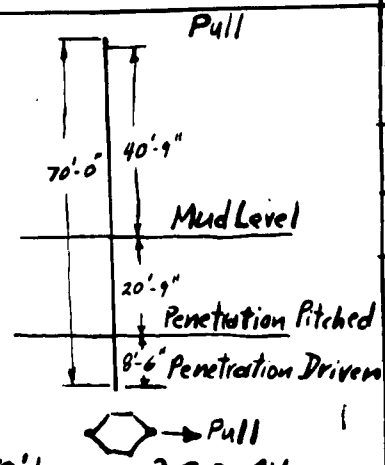	½	3
	¾	6
	1	8½
	1¼	11
	1½	14
	1¾	17
	2	20
	2½	25½
	0	1½

70' Larssen B.P. 3 Pile pulled about YY Axis

TABLE A-2

Pile Detail	Pull Pounds	Average Deflection Inches	Number of Readings	Theoretical Deflections
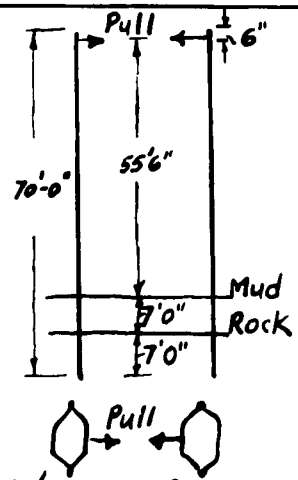	0	0	0	0
	770	3.6	2	3.5
	1280	5.9	4	5.7
	1770	8.1	4	7.8
	2300	11.0	1	10.2
	2800	13.0	1	12.4
	2300	11.5	1	10.2
	1280	6.5	2	5.7
	0	0.125	0	0

70' Larssen B.P. 4½ pulled about XX Axis

pile in bending the point of fixity appears to be about 5 ft. below the top of the mud.

The second lateral test was carried out by pulling one pile against another. Both piles were 70' long, Larssen B.P. 4's, penetrating 7 ft. into mud and 7 ft. into hard shale. The horizontal loads were applied 6 inches below the top or 55.5 ft. above the mud level. Results are given in Table A-2, which indicate complete fixity 7 ft. below the mud, i.e. at the surface of the rock.

3. Tests on Long Hollow Piles

A special test foundation was set up in 1946 in Lake Maracaibo, Venezuela to study the action of long hollow cylindrical caissons when subjected to known applied lateral loads (Ref. 95). The test caissons consisted of concrete encased hollow steel, $4\frac{1}{2}$ ft. in outside diameter and 170 ft. long with a total wall thickness of 5 inches. The bottom tips of the cylinders were closed with a reinforced concrete point. The caissons were driven into the bottom of the lake using a total applied static load of 200 tons plus the dead weight of the cylinder partially filled with water.

Strain measurements were made on the test caissons using waterproofed SR-4 type strain gages attached to the inside surfaces of the steel shells. Of three test specimens, one was set up as a single free caisson. The other

two were rigidly joined together by a connecting girder to form a two-caisson bent. The loads were applied in both cases at a point 14 ft. above water level. The depth of water was 80 ft. and the total penetration was 77 ft. The soil was very soft clay.

The results indicated that the plastic clay into which the caissons penetrated acted as an elastic medium in resisting lateral forces. The point of maximum moment for both tests remained essentially at the same level -- about 10 ft. or 2 diameters below the mud line -- as the load increased. The effective point of fixation for the caisson moved downward as larger loads were applied.

General experience and field observations in Maracaibo substantiate the test data regarding the point of maximum moment. The greatest damage or failure whenever a large tanker strikes the piles in an accident situation invariably occurs at an elevation of 8 to 12 ft. below the mud line.

4. Test at New London Submarine Base, 1946

A single pile, a two-pile bent and a fourteen-pile dolphin were loaded horizontally. The single pile and the two-pile bent failed ultimately due to fracture of the compression pile, but only after considerable deformation had already taken place. There was no fracture in the fourteen-pile dolphin, and failure was failure of the soil. Loads were applied in increasing increments, and the pile was

CALCULATIONS for SINGLE PILE TEST (NEW LONDON) USING BLUM METHOD

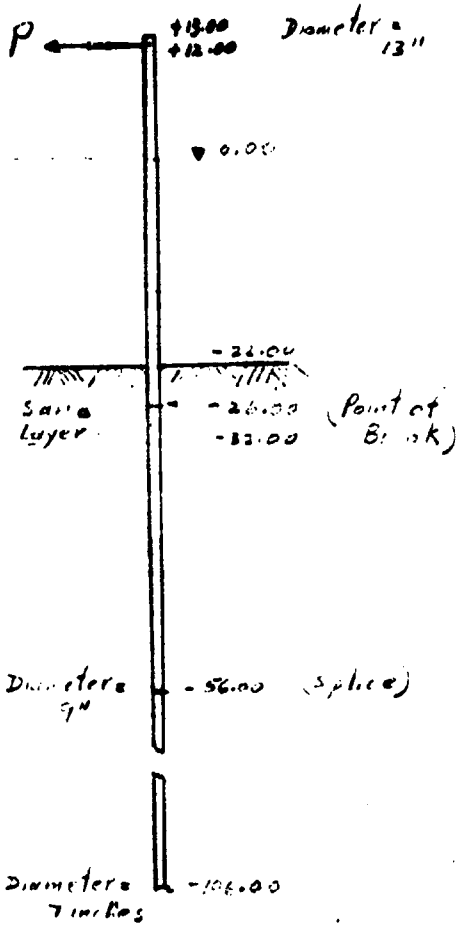

Yellow Pine Pile —

Modulus of rupture = 11 ksi

Proportional Elast Limit = 6.5 ksi

Sand Layer —

$\gamma_{sub.} = 60$ pcf

$\phi = 30^\circ$

Diameter of Pile at Elev. -26.00 is $\sim 10.74''$

and $b = 0.894'$

$$S = 0.785\left(\frac{D}{2}\right)^3 = 0.785\left(\frac{10.75}{2}\right)^3 = 121.5^{3}$$

$$M_{(rupture)} = 121.5 \times 11 = 1336 \text{ in-Kips}$$

$$f_w = \gamma_{sub} \times K_p = 60 \times 3 = 180$$

$$\frac{6P}{f_w} = X_m^2 (X_m + 3b)$$

$$\frac{P}{30} = X_m^2 (X_m + 2.68) \qquad (1)$$

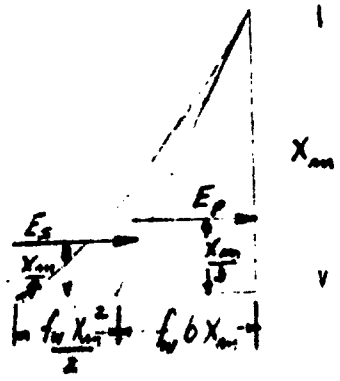

$$P(34.00 + X_m) - 180(.894)\frac{X_m^3}{6} - \frac{180 X_m^4}{24} = \frac{1336 \times 10^3}{12}$$

$$34.00P + X_m P - 26.8 X_m^3 - 7.5 X_m^4 = 111{,}333 \qquad (2)$$

Substituting Equation (1) in (2) and solving

X_m (Point of M_{max}) = 3.91 ft

and $P = 3020$ lbs.

(By actual test $X_m = 4.0$ ft and $P = 2600$ lbs)

If $\phi_{sand} = 35^\circ$, $K_p = 3.7$; $X_m = 3.6'$ and $P = 3010$ lbs

$\phi_{sand} = 25^\circ$, $K_p = 2.5$; $X_m = 4.2'$ and $P = 3020$ lbs

Figure A-1

unloaded between each application: there was no load for which no permanent set occurred. The two-pile dolphin failed with a load of 2,800 lb. and the fourteen-pile dolphin was showing continuously increasing deflection for a constant horizontal load of 25 tons when the test was stopped.

The test of the single pile was checked by the Blum method and the results are shown in Figure A-1.

The soil conditions were 10 ft. of sand over silty clay. It is thought these results are not now of much quantitative use, but qualitatively, their demonstration of the mode of failure of a dolphin is interesting.

Reference: Bureau of Yards & Docks Public Works drawing E.98.

5. Tests of Pile Dolphins at Lock No. 21, Mississippi River, 1938, by the Corps of Engineers

Dolphins were built and loaded barges were run into them to discover their efficiency as protection dolphins. Seven-pile cluster dolphins were built. In a series of tests they did not fail when rammed at 1½ kt. by a 210-ton barge but two did fail when hit by a 170-ton barge traveling at 3 kt. A 13-pile dolphin stopped a 326-ton barge moving at 3 kt., but 11 of the 13 piles were sheared off.

Thus for river traffic it was concluded that stronger dolphins, possibly with 37 piles, would have to be used.

6. Model Tests at Princeton

Useful qualitative results were obtained from tests carried out by Tschebotarioff at Princeton when model timber dolphins were tested to failure. The mode of failure of a 3-pile dolphin is shown in Figure 3.16. The results are given in Reference (75).

Note that Tables 2.1, 2.2 and 2.3 on page 65 ff. show further tests of piles and pile groups.

APPENDIX B

Recommended Test Specifications For Repeated Lateral Loads on Piles

Ideally, the designer should ultimately be able to determine the Shake Down Load of a pile at any site from laboratory or field tests on the soil. But before this can be done it is necessary to carry out very many carefully controlled full-scale tests on laterally loaded piles in order to provide the basic data which can be correlated with soil tests. The aim in testing should be to produce a diagram such as that shown in Figure B-1, in which lateral loads on a pile are plotted against the number of applications of the loads to cause failure. It is to be hoped that a series of tests will give a curve such as curve (1), which is asymptotic to a value which is taken as the Shake Down Load, and not curve (2) for which there is no asymptote and which gives a failure load which always decreases with number of applications.

The tests should be carried out as follows. First, detailed records of soil properties should be made from borings. Then the pile should be driven. It should preferably contain pressure sensing cells along its length so that the pressure distribution along the pile can be known -- the pressure cells should be more closely spaced at the top of

the pile. The Bureau of Yards and Docks has developed such an instrumented pile.

Then for a particular value of height of application above grade a given load should be applied, left on for a standard time and then removed. It is suggested that the time of application should be 5 sec., and the time of removal also 5 sec. This should be repeated with the same load until either the pile deflects no further or it fails.

It is of course necessary to make accurate deflection measurements.

The variables in the test are:

(1) Load

(2) Number of cycles to failure

(3) Height of application

(4) Soil

One P - n curve is needed for each soil type, and for one soil, P - n curves for varying height of application should be obtained.

LOAD / NO. OF APPLICATIONS

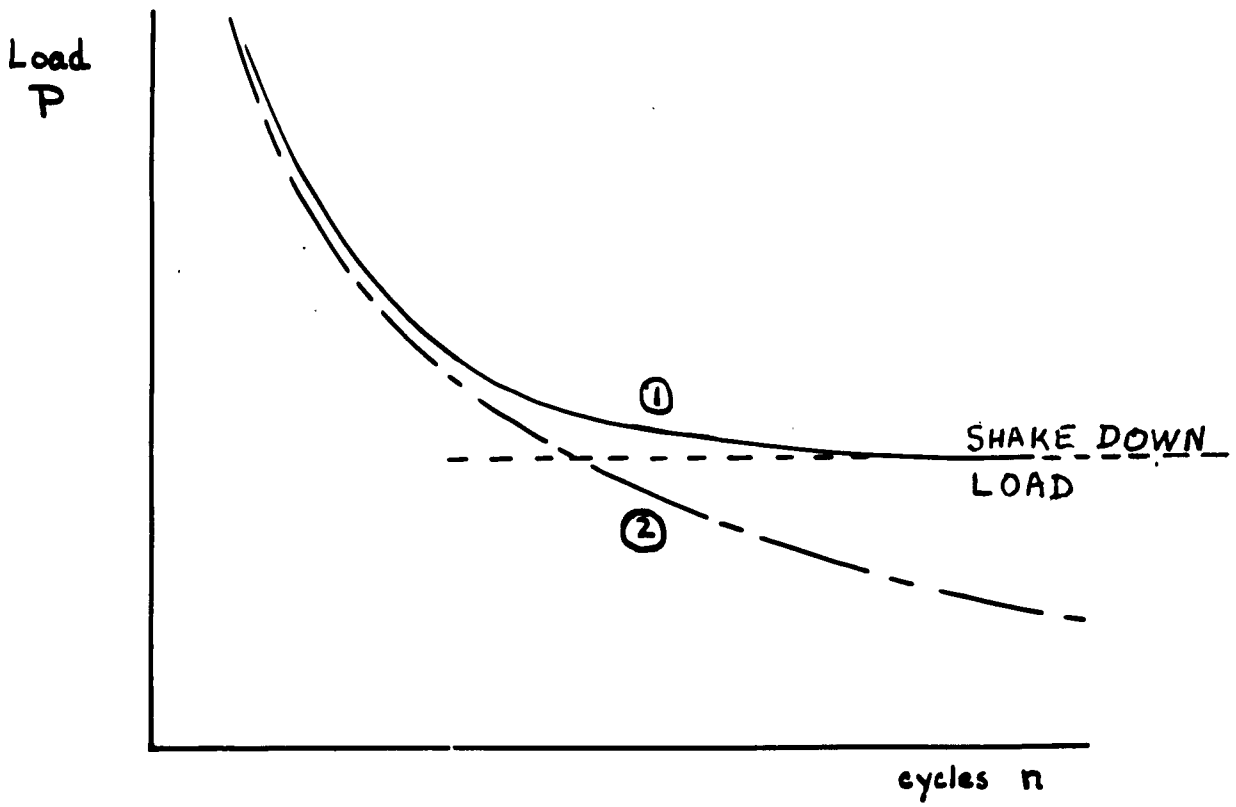

FIG B 1

APPENDIX C

General Method for Analysis of Pile Cluster Dolphins

This method is so general that it can be applied to almost all types of pile cluster dolphins. It was however considered too difficult to program the method in the time allotted for the writing of this thesis, and it was also felt that the additional trouble spent on it would not be worthwhile.

It is included as an appendix in case it should prove useful to future workers in the field.

Notation & Sign Convention

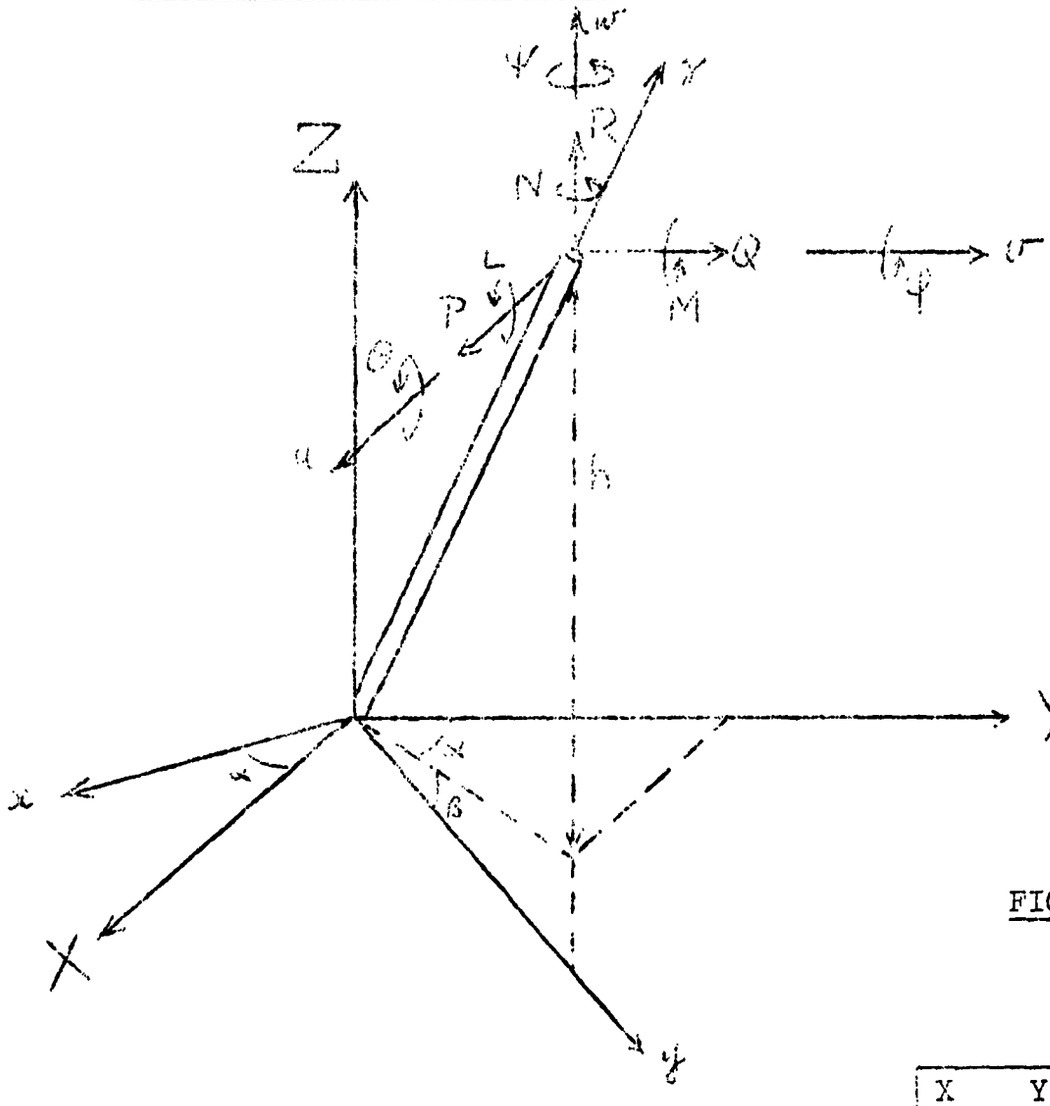

FIG. C-1

	X	Y	Z
deflections	u	v	w
rotations	θ	ϕ	ψ
loads	P	Q	R
moments	L	M	N

The right-hand screw rule is used throughout.

Flexibility Matrix of Pile shown in Fig. C-1

A pile has four types of load. Consider a pile along the z-axis.

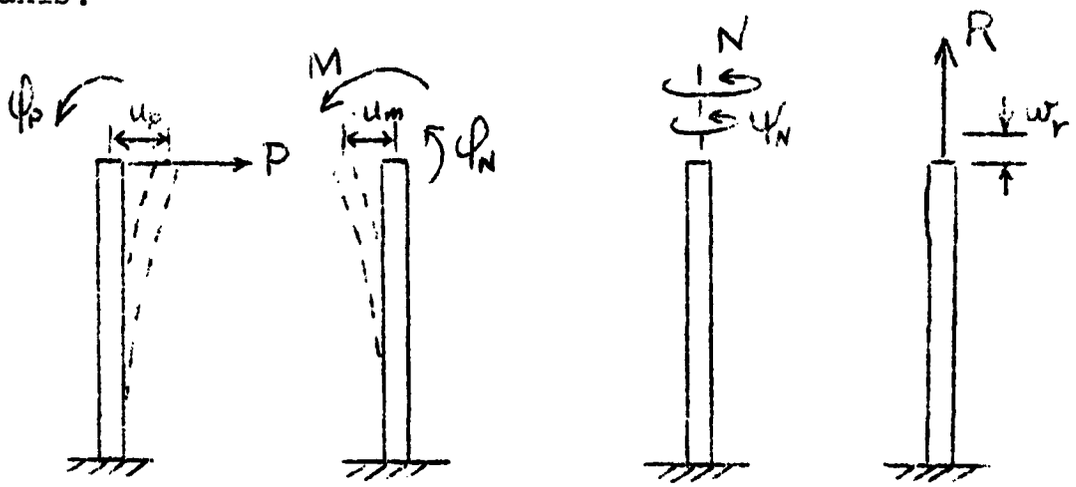

So we have a basic flexibility matrix f:

$$f = \begin{bmatrix} u/P & 0 & 0 & 0 & 0 & u/N \\ 0 & v/Q & 0 & 0 & 0 & 0 \\ 0 & 0 & w/R & w/L & 0 & 0 \\ 0 & 0 & \theta/R & \theta/L & 0 & 0 \\ 0 & 0 & 0 & 0 & \psi/M & 0 \\ \psi/P & 0 & 0 & 0 & 0 & \psi/N \end{bmatrix}$$

The flexibility matrix for the pile shown in Fig. C-1 is

$$F = T' \; f \; T$$

where T is a 6 x 6 transformation matrix.

The transformation matrix T is

$$T = \begin{bmatrix} l_n & m_n & n_n & 0 & 0 & 0 \\ l_y & m_y & n_y & 0 & 0 & 0 \\ l_z & m_z & n_z & 0 & 0 & 0 \\ 0 & 0 & 0 & l_n & m_n & n_n \\ 0 & 0 & 0 & l_y & m_y & n_y \\ 0 & 0 & 0 & l_z & m_z & n_z \end{bmatrix}$$

And for the axis system shown in Fig. C-1:

$l_n = \cos\alpha$ $\quad m_n = -\sin\alpha$ $\quad n_n = 0$

$l_y = \sin\alpha \cos\beta$ $\quad m_y = \cos\alpha \cos\beta$ $\quad n_y = -\sin\beta$

$l_z = \sin\alpha \sin\beta$ $\quad m_z = \cos\alpha \sin\beta$ $\quad n_z = \cos\beta$

And our final flexibility matrix will be:

$$F = \begin{bmatrix} u/P & u/Q & u/R & u/L & u/M & u/N \\ v/P & v/Q & v/R & v/L & v/M & v/N \\ w/P & w/Q & w/R & w/L & w/M & w/N \\ \theta/P & \theta/Q & \theta/R & \theta/L & \theta/M & \theta/N \\ \phi/P & \phi/Q & \phi/R & \phi/L & \phi/M & \phi/N \\ \psi/P & \psi/Q & \psi/R & \psi/L & \psi/M & \psi/N \end{bmatrix}$$

Coordinate System for a general pile is:

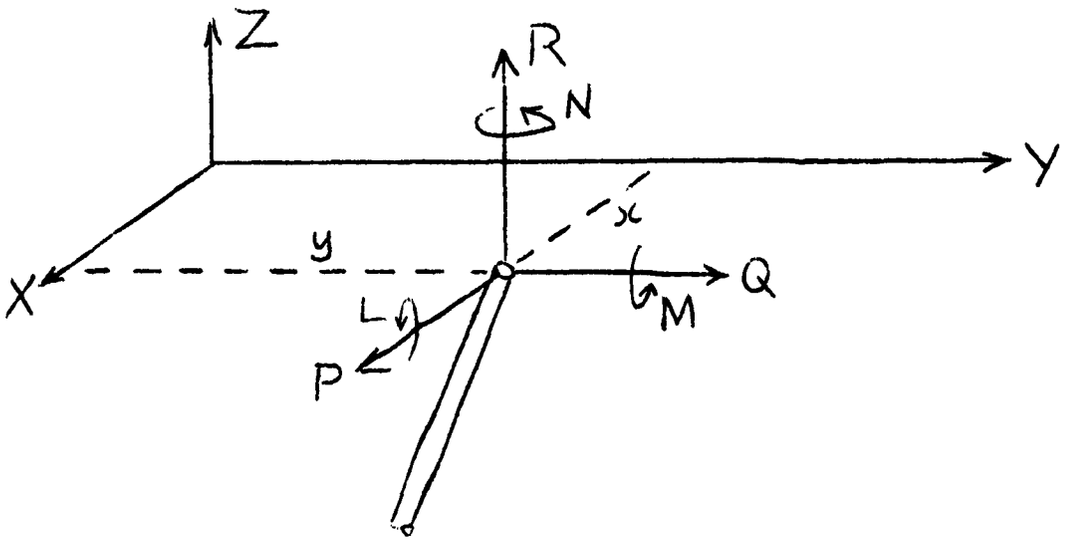

If the applied loads are P_A and N_A, then the equations of equilibrium of the dolphin are:

$$\sum P_r = P_A \qquad (1)$$

$$\sum Q_r = 0 \qquad (2)$$

$$\sum R_r = 0 \qquad (3)$$

$$\sum (L_r + R_r y_r) = 0 \qquad (4)$$

$$\sum (M_r - R_r x_r) = 0 \qquad (5)$$

$$\sum (N_r - P_r y_r + Q_r x_r) = N_A \qquad (6)$$

For a symmetric dolphin, if the load P_A only is applied, with no moment applied, then equations (2), (4) and (6) can be dropped as the condition is symmetrical.

Equilibrium gives, in general, 6 equations, and there are n x 6 unknowns. Hence (n - 1) x 6 equations must be obtained from consideration of the compatibility of the system.

Compatibility Equations

Consider the plane where two piles join. Assume they are rigidly attached to each other. Let their centers have coordinates $(n_1 y_1)$ and $(n_2 y_2)$.

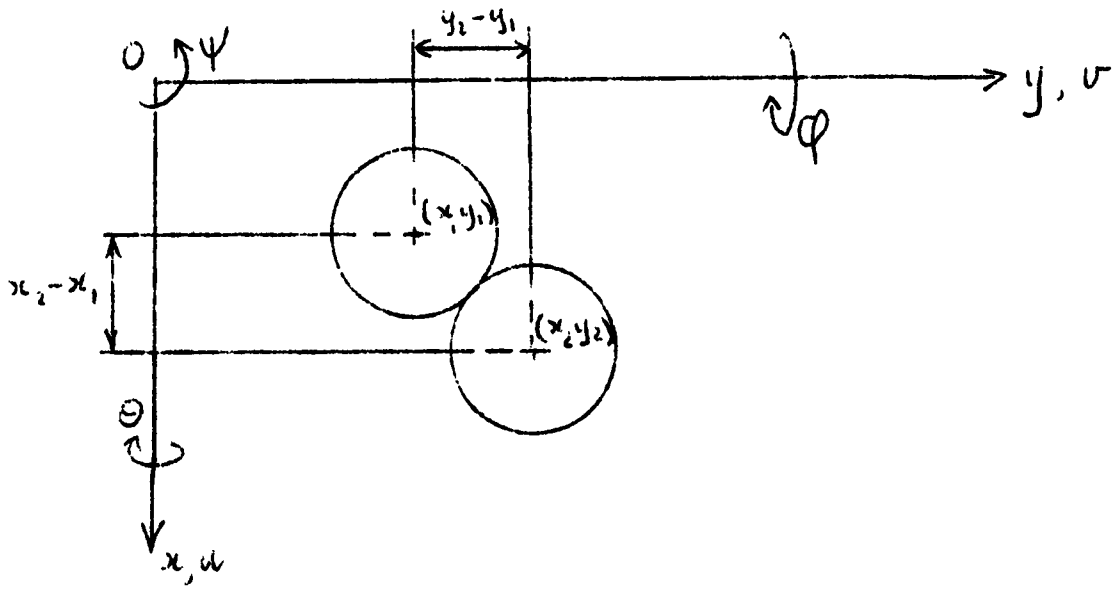

Rotational compatibility equations are:

$$\theta_1 = \theta_2 \tag{7}$$

$$\varphi_1 = \varphi_2 \tag{8}$$

$$\psi_1 = \psi_2 \tag{9}$$

Translational compatibility equations are:

$$u_2 = u_1 - \psi_1(y_2 - y_1) \tag{10}$$

$$v_2 = v_1 + \psi_1(x_2 - x_1) \tag{11}$$

$$w_2 = w_1 + \theta_1(y_2 - y_1) - \varphi_1(x_2 - x_1) \tag{12}$$

The deflections of any pile are given by

$$\begin{Bmatrix} u_r \\ v_r \\ w_r \\ \theta_r \\ \phi_r \\ \psi_r \end{Bmatrix} = \begin{bmatrix} F_r \end{bmatrix} \begin{Bmatrix} P_r \\ Q_r \\ R_r \\ L_r \\ M_r \\ N_r \end{Bmatrix}$$

or

$$\begin{Bmatrix} \Delta_r \end{Bmatrix} = \begin{bmatrix} F_r \end{bmatrix} \begin{Bmatrix} S_r \end{Bmatrix}$$

So the compatibility equations for the first and second piles would be:

$$\begin{bmatrix} F_2 \end{bmatrix} \begin{Bmatrix} P_2 \\ Q_2 \\ R_2 \\ L_2 \\ M_2 \\ N_2 \end{Bmatrix} - \left[\begin{array}{ccc|ccc} 1 & & & 0 & 0 & -(y_2-y_1) \\ & 1 & & 0 & 0 & +(x_2-x_1) \\ & & 1 & (y_2-y_1) & -(x_2-x_1) & 0 \\ \hline & & & 1 & & \\ & & & & 1 & \\ & & & & & 1 \end{array}\right] \begin{bmatrix} F_1 \end{bmatrix} \begin{Bmatrix} P_1 \\ Q_1 \\ R_1 \\ L_1 \\ M_1 \\ N_1 \end{Bmatrix} = 0$$

or

$$\begin{bmatrix} F_2 \end{bmatrix} \begin{Bmatrix} S_2 \end{Bmatrix} + \begin{bmatrix} E_1 \end{bmatrix} \begin{Bmatrix} S_1 \end{Bmatrix} = 0$$

So for the whole dolphin we can write:

$$
\begin{bmatrix}
E_1 & F_2 & & & \\
 & E_2 & F_3 & & \\
 & & E_3 & F_4 & \\
 & & & & \\
 & & & & \\
C_1 & C_2 & \cdots & \cdots & C_n
\end{bmatrix}
\begin{Bmatrix} S_1 \\ S_2 \\ S_3 \\ \vdots \\ S_n \end{Bmatrix}
=
\begin{Bmatrix} \cdots \\ 0 \\ \cdots \\ P \end{Bmatrix}
$$

where

$$
\left[C_r\right] =
\left[\begin{array}{ccc|ccc}
1 & & & & & \\
 & 1 & & & & \\
 & & 1 & & & \\
\hline
0 & 0 & -y_r & 1 & & \\
0 & 0 & +x_r & & 1 & \\
y_r & -x_r & 0 & & & 1
\end{array}\right]
$$

The solution can now be carried out in the way suggested in Chapter II, section D.

APPENDIX D

C O P Y

NATIONAL PHYSICAL LABORATORY

REPORT on MODEL EXPERIMENTS TO DETERMINE THE BEHAVIOUR OF A RING DOLPHIN.

- - - - - -

Ship Division

made to the order of

Messrs. POSFORD, PAVRY & PARTNERS.

- - - - - -

Model No. 3907

- - - -

Introduction

The Ring Dolphin is a buoyant, energy-absorbing device designed by Messrs. Posford, Pavry & Partners, which acts as a buffer or fender against the approach of a ship at low speed. It consists of a heavy base, a central shaft or stalk, and a hexagonal buoyant ring or pontoon. The pontoon is free to move up and down the stalk, according to the state of tide, but when impact of a vessel against the pontoon occurs, binding of the pontoon-collar on the stalk takes place. In this condition the dolphin offers resistance to horizontal forces transmitted by the vessel, due to buoyancy reaction in the inclined position.

A model of the Ring Dolphin was supplied by Messrs. Posford, Pavry & Partners to 1/40 full size, and tests were conducted in conjunction with this model and a wooden model made

DATE 12th August, 1957.

G. B. B. M. SUTHERLAND
Director

REFERENCE SH M.P.12
DJD/WB

/s/ G. Hughes
G. Hughes
Acting Superintendent, Ship Division.

PASSED BY
/s/ D J Dough.

R.1

at the N.P.L. of a tanker-type vessel representing to 1/40 scale a ship 700 ft. B.P. length and having a displacement of 45,000 tons. These experiments were conducted at the shallow end of No. 2 Tank, the depth of water corresponding to 60 feet on the full scale.

A range of speed of approach of the vessel up to 3 knots was represented, model speeds being assumed to vary as $\left(\frac{1}{\sqrt{\text{scale}}}\right)$ of the full-scale speeds, whilst forces measured during the experiments have been expanded as the $(\text{scale})^3$ and are applicable to fresh water. When working in water of a different specific gravity, the forces may be increased pro rata as the ratio of their specific gravities.

Description of Apparatus

The tanker model was driven by a rack and pinion mechanism (Fig. 1) by means of which any required constant velocity of approach up to 3.0 knots ship speed could be obtained. Approach velocity was measured by fitting a micro-switch to the main motor drive, R.P.M. of the driving shaft being recorded electrically on a four-channel recorder with a suitable ½-second time base. A linear calibration of R.P.M. of the main driving shaft versus corresponding ship speed in knots was obtained.

Angle of inclination of the stalk or vertical shaft of the dolphin was recorded during each experiment by incorporating a light-weight spring-loaded pointer coaxial with it, and mounted above the Bean bollard (Fig. 2). This spring-loaded pointer made contact with a graduated perspex screen mounted horizontally, the trace of the path of the pointer being obtained on the under surface of the screen during each experiment

Preliminary Experiments

1. The dolphin was calibrated statically by recording its resistance to horizontally applied forces in terms of angular deflection of the stalk from the initial vertical position. For this purpose the dolphin was weighted down on a metallic bed, in a depth of water corresponding to 60 ft. on the full scale. Horizontal forces were applied through a framework surrounding the dolphin, the point of contact being free to adjust itself according to angular deflection of the pontoon, thus ensuring that the forces were always applied through the centre of the circular section

of the pontoon. Two calibrations were made in this manner (Fig. 3) for two positions of the feet up to the maximum angular deflection of the stalk of 14 degrees.

It will be seen that the dolphin is more effective in condition A in which a pushing force is applied in the direction of one of the three feet, compared with condition B in which a pushing force is applied in the direction of the bisector between any two of the feet. The maximum horizontal resistance offered by the dolphin in condition A is 115 tons, the corresponding resistance in condition B being 88 tons, the difference being due to the leverage of the pivoting points of the feet. Beyond these values the base would tend to move, as the feet are then fully depressed in their recesses.

2. Further calibrations were made by applying horizontal forces at the bollard fitted to the top of the stalk, in conditions A and B (see Fig. 4). For both conditions the effectiveness of the dolphin is reduced due to the greater leverage of the applied forces. In condition A it is again more effective than in condition B, the corresponding forces being 70 and 57.5 tons respectively, beyond which movement of the base would tend to occur.

It will be observed that for these tests the base was specially loaded to prevent sliding or tilting, and that without this special loading the base would have slid or tilted at reduced values of horizontal force in most cases, with the exception of the working condition in which the fins are projecting and the base is half-bedded in sand.

The clearance of the collar on the stalk corresponded to 0.8 in. on the full-scale dolphin. (See Section 3).

3. Sliding Tests. In these tests the special loading of the base was removed. The weight of the base in these tests corresponds to 370 tons (in air).

(a) Smooth Metallic Bed. Horizontal forces were applied at the bollard until the base began to slide. Sliding commenced at a force corresponding to 45.7 tons.

(b) Fins retracted, base resting on sand. Horizontal forces were applied at the bollard until the base began to slide. A slight tilt of the base was observed prior to sliding, which commenced at 48.6 tons.

(c) Fins projecting, base resting on sand. Horizontal forces were applied at the bollard until the base tilted. Tilting of the base commenced at a value of 60 tons.

(d) Fins projecting, base half-bedded in sand. Horizontal forces were applied at the bollard until the base tilted. Tilting of the base commenced at a value of 71.4 tons.

4. Raising the dolphin from a sea-bed.

(a) The steady force required to lift the dolphin from a smooth metallic bed was determined to be 180 tons.

(b) The steady force required to lift the dolphin, with the base half-bedded in sand, was determined to be 225.5 tons.

5. Main Series of Experiments. In this series of experiments the base was either resting on a concrete bed and specially loaded as in the preliminary experiments, or half-bedded in sand with fins projecting, depending on the purpose of the experiment.

The dynamic behaviour of the dolphin was studied by impacting the tanker model having a displacement corresponding to 45,000 tons against it, at a series of constant approach velocities.

(a) In the first instance the worst conditions of approach were investigated, i.e. the centre of the dolphin was placed on the centreline of approach of the vessel, and impact of the bow occurred with one face of the pontoon at right angles to the direction of motion. The approach velocity at which full deflection of the feet was observed is 0.73 knot. These results are given in Table 1 and shown in Figs. 5, 6 and 7.

Table 1

Figure No.	Ship Speed (knots)	Deflection of Stalk (degrees)	Force (tons)
5	0.28	2.8	39.0
6	0.58	9.6	104.0
7	0.73	13.5	115.0

(b) The dolphin was displaced half the beam of the vessel from the centreline of approach, and the dynamic behaviour observed over a range of ship speeds. For each

speed investigated, the feet were aligned at particular angles to the direction of motion of the model, covering a range of inclination from 0 to 120 degrees in intervals of 15 degrees.

These results are given in Figs. 8 and 9, and supplementary Figures 10 to 104.

(c) The behaviour of the dolphin in waves was recorded on cine film for wave-lengths of approximately 130 and 300 ft., and a wave height of 6.0 feet. These waves were not very regular or well formed, being generated by the movement of the tanker model by manual control.

6. Conclusions. These apply to the condition when the base does not slide or tilt unless otherwise stated.

(I) During impact of a vessel on the pontoon, the action of the feet varies according to their inclination to the line of travel of the vessel. The greatest resistances to horizontally applied forces at the face of the pontoon occur when one of the feet is pointing in the reverse direction to the motion of the vessel. This resistance has a magnitude of 115 tons when the dolphin is working in 60 ft. of water, and the two remaining feet are fully depressed.

(II) When the dolphin is in line with the direction of motion, the full energy of a 45,000 tons displacement vessel is absorbed when impacting at 0.73 knot. This corresponds to an energy absorption of 1060 ft. tons (excluding entrained water effects).

(III) Beyond a speed of 0.73 knot for a 45,000 tons displacement vessel, with the centre of the dolphin in line with the direction of motion, the base tilts when half-bedded in sand and fins projecting.

(IV) With the centre of the dolphin offset half the beam of the vessel from the line of motion, speeds up to 2.0 knots can be tolerated, before movement of the base occurs.

(V) With the centre of the dolphin offset half the beam of the vessel from the line of motion, maximum angular deflection of the stalk for constant speed of approach occurs with X values in the region 0 - 30°. (X° = the angle measured in a clockwise direction from a reference foot, pointing in the direction of motion of the vessel). Minimum deflection of the stalk, for constant speeds of approach, occurs with X values in the region of 90°.

(VI) According to the cine film records obtained, showing the behaviour of the dolphin in waves, it can be observed that the collar of the pontoon is free to ride up and down the stalk, and binding of the collar occurs on impact of a vessel on the pontoon.

(VII) A tendency for the stalk to rise and fall due to wave action was observed, in addition to an oscillation about the vertical of $\pm 5^{\circ}$.

12th August, 1957.
SH M.P.12
DJD/WB

C.S. 6 (6398)

FIGURE 1

FIGURE 2

DETAIL OF SPRING LOADED POINTER

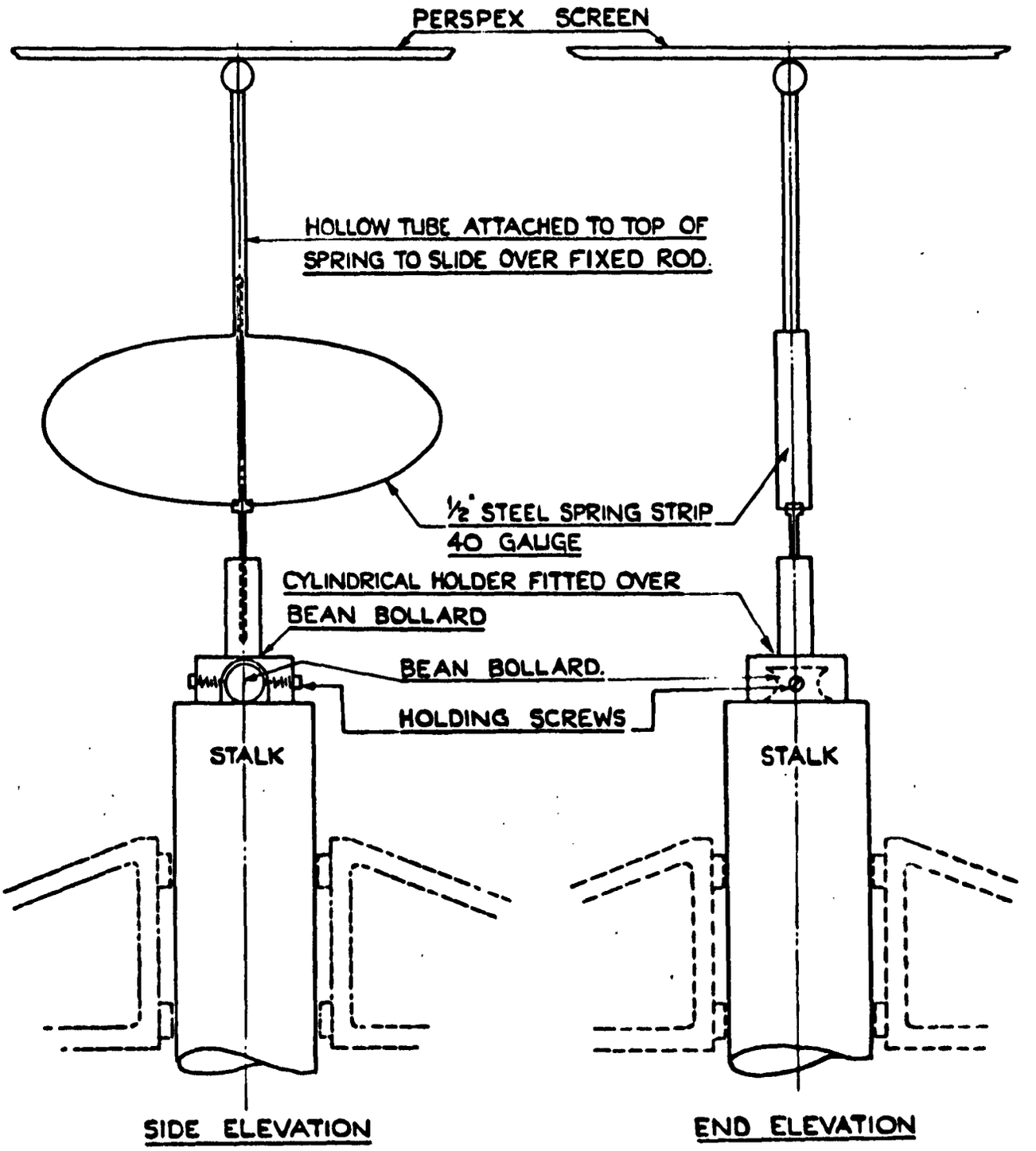

FIGURE 3.

ANGLE OF DEFLECTION OF STALK FROM VERTICAL & FORCE IN TONS AT PONTOON LEVEL

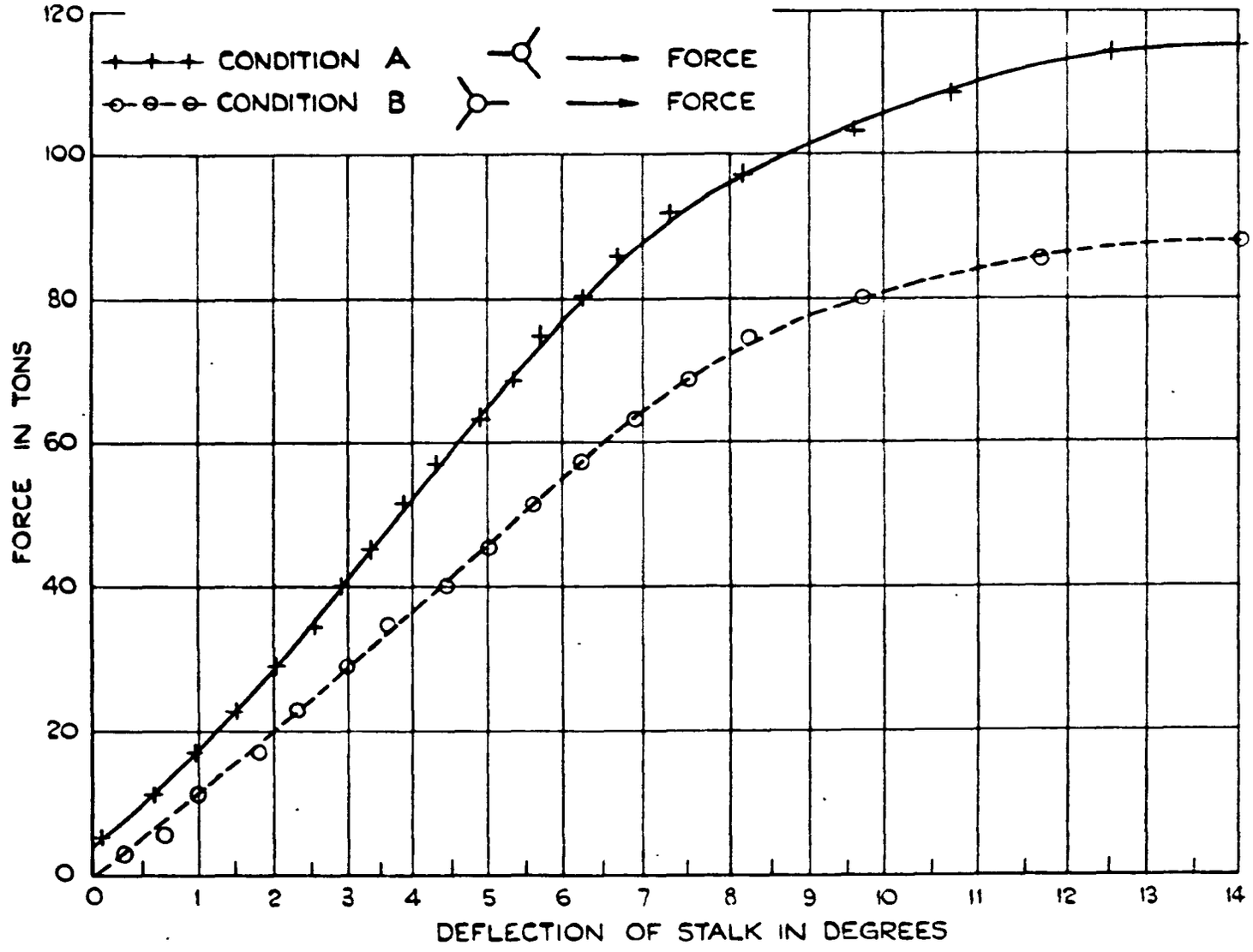

FIGURE 4.

ANGLE OF DEFLECTION OF STALK FROM VERTICAL ℧ FORCE IN TONS AT BEAN BOLLARD

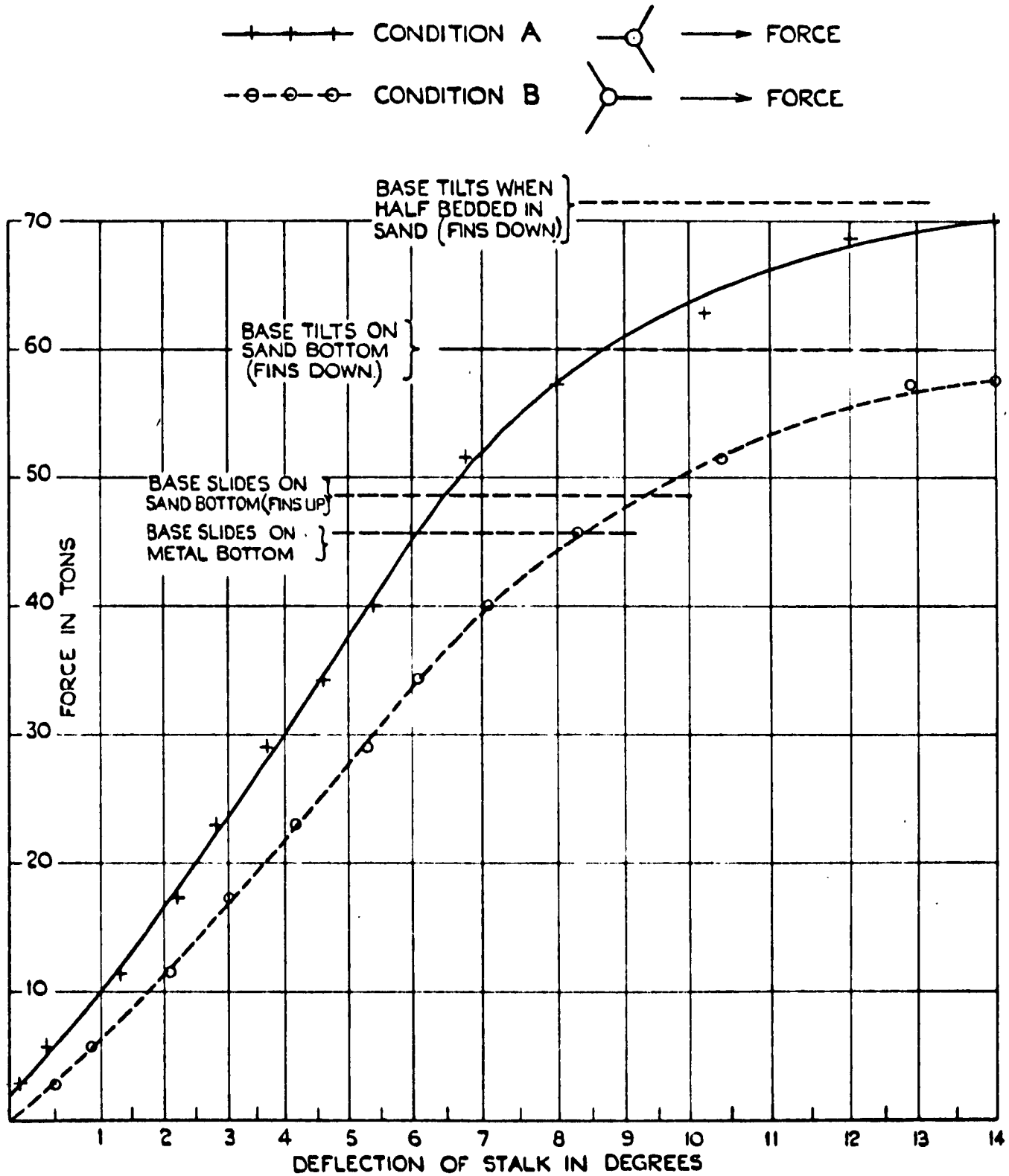

FIGURE 5

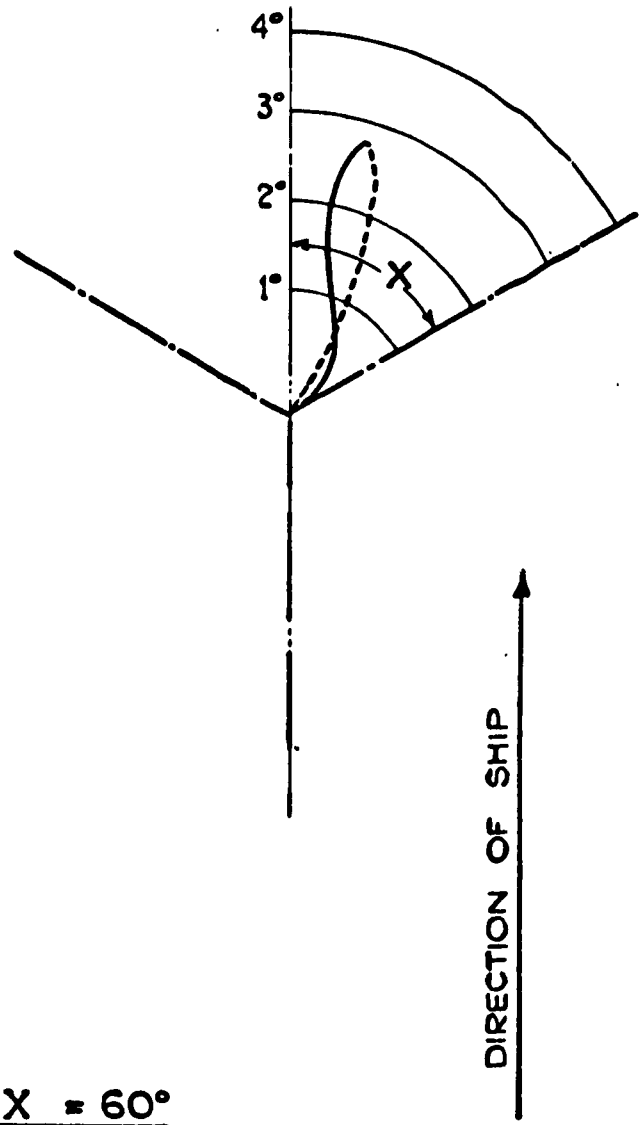

VALUE OF X = 60°

EXPERIMENT 4

SHIP SPEED = 0·28 KNOTS

———— INITIAL TRACE

- - - - - - RETURN TRACE

FIGURE 6

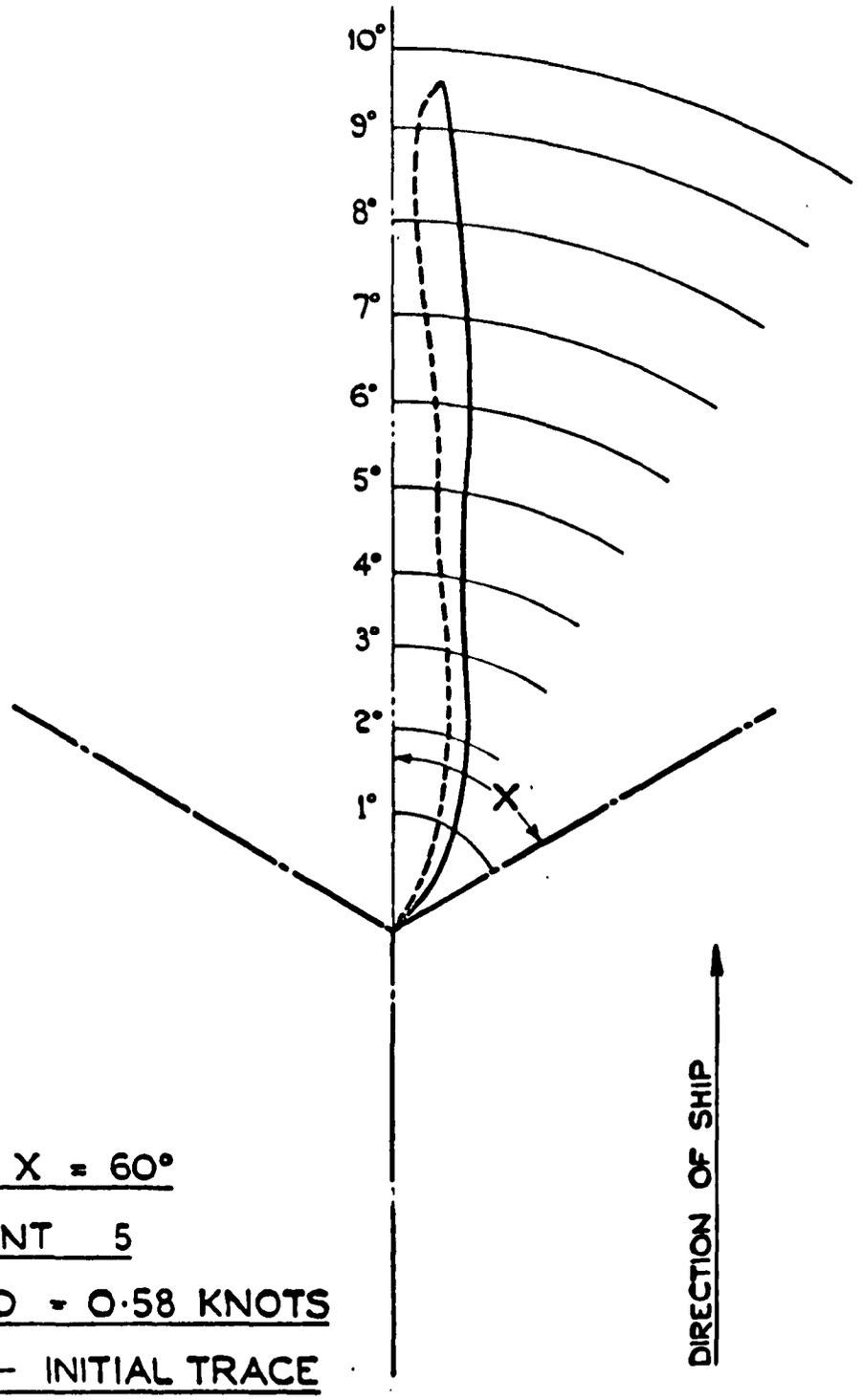

VALUE OF X = 60°

EXPERIMENT 5

SHIP SPEED = 0·58 KNOTS

——————— INITIAL TRACE

- - - - - - - - - RETURN TRACE

FIGURE 7

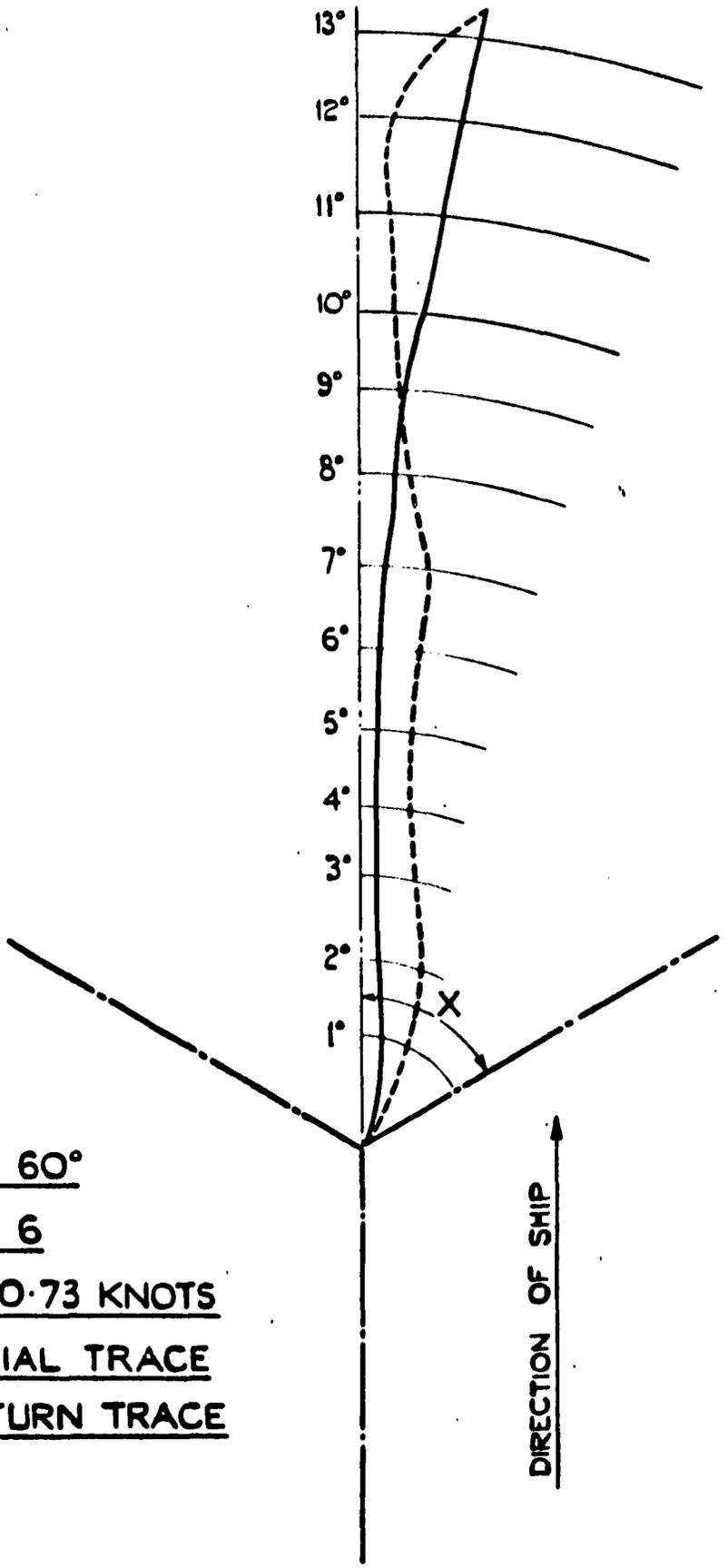

VALUE OF X = 60°

EXPERIMENT 6

SHIP SPEED = 0·73 KNOTS

——————— INITIAL TRACE

---------- RETURN TRACE

FIGURE 8.

CURVES OF ANGULAR DEFLECTION, FROM VERTICAL, OF STALK, υ SHIP SPEED, FOR VARYING VALUES OF X

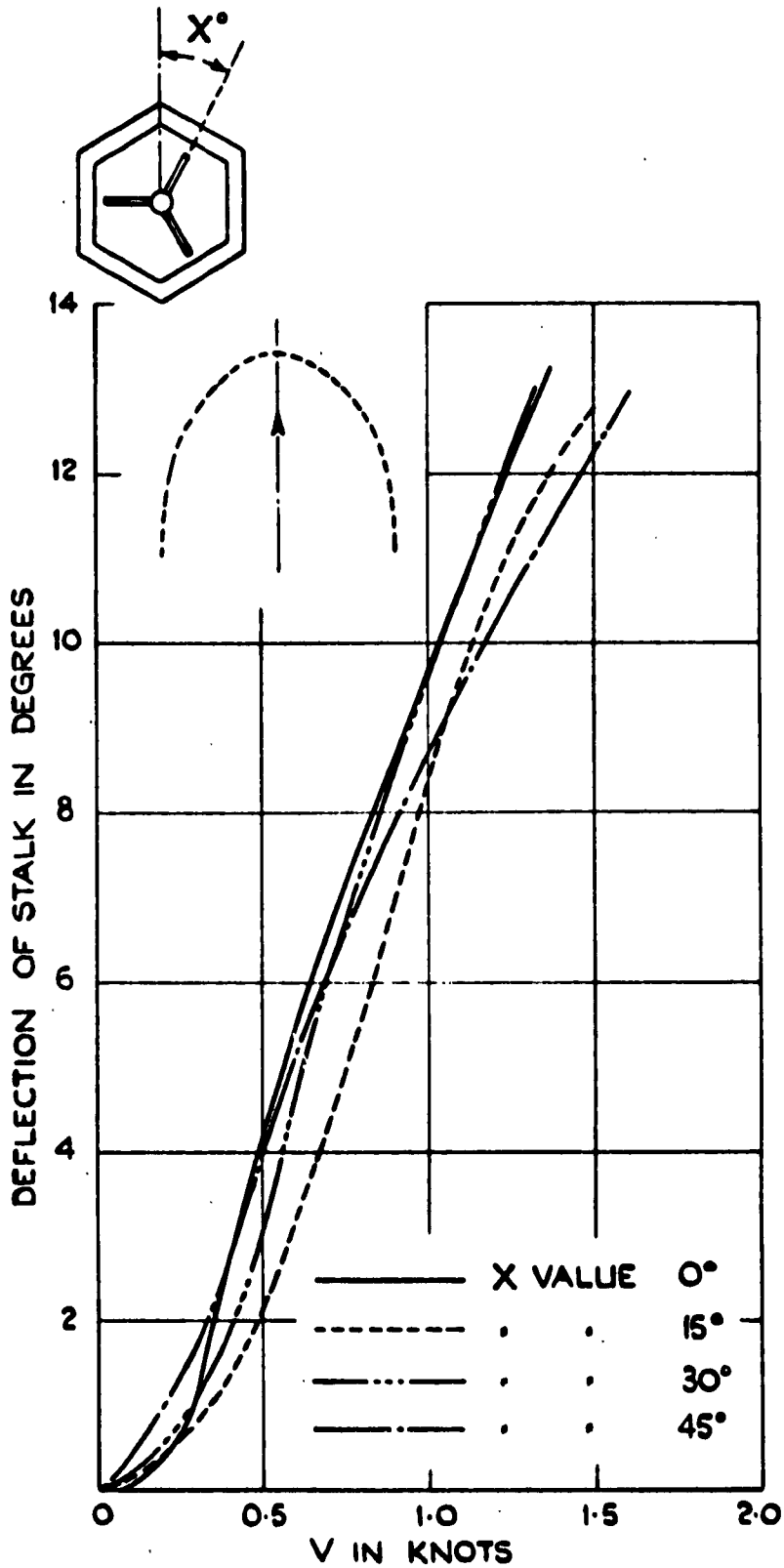

APPENDIX E

C O P Y

AMERCOAT CORPORATION
Manufacturers of Corrosion Resistant Products
4809 Firestone Boulevard
South Gate, California

March 10, 1961

Werner E. Schmid
Associate Professor of Civil Engineering
Princeton University
School of Engineering
Princeton, New Jersey

Dear Dr. Schmid:

Thank you for your letter of February 28, 1961, addressed to Mr. C. G. Munger. He has asked me to reply and give you a summary of our exposure data on Dimetcote No. 3 in tests at the Battelle Memorial Institute site at Daytona Beach, Florida, and the International Nickel site at Wrightsville Beach, North Carolina.

Our test data on the products at these two locations is contained only in internal reports since neither organization issues exposure reports on products under test. Battelle Memorial Institute maintains the test site at Daytona Beach, and provides us with panel installation and maintenance for a service fee; International Nickel Company data obtained at Wrightsville Beach is not ordinarily disseminated publicly.

A summary of our results with Dimetcote No. 3 at these two test sites is as follows:

Daytona Beach

Dimetcote No. 3 has withstood tidal immersion over a five year period with no film destruction. In continuous immersion the product shows scattered pitting after approximately two years test. When over coated with Amercoat No. 86 Primer and Amercoat No. 33 Vinyl Topcoat the entire system is unaffected for over three years of continuous immersion and will undoubtedly withstand several more years of such immersion.

Panels exposed on the Daytona Beach Ocean Rack (located about 75 yards from the surf), and positioned at 45° south have withstood, in an original series, eight years of severe marine weathering with no coating breakdown and with almost perfect corrosion protection. A later series, similarly exposed, shows no change in the coating and perfect protection of scribed panels over a seven year period. Dimetcote No. 3 was applied at a film thickness of 2½ to 3½ mils. The total life of the coating in this test will probably be substantially longer than ten years.

International Nickel Company Tests

Scribed panels of Dimetcote No. 3 consisting of one coat of the material at a thickness of 2½ to 3½ mils have withstood over nine years of severe marine weathering on the 80 foot lot at Kure Beach, North Carolina. The racks in this lot are located at a point 80 feet inland from the surf line. Panels are positioned 30° and 45° facing the surf. There has been no coating breakdown on these panels and protection against corrosion is essentially perfect.

Tidal immersion at the Wrightsville Beach site parallels in performance those obtained at the Battelle site.

I hope that the information outlined above will be of assistance to you.

Very truly yours,

/s/ D. H. Gelfer

Manager, Research Laboratory

DHGelfer:ps

THE STRUCTURAL ACTION OF

TIMBER PILE CLUSTER DOLPHINS

David Elms and Werner Schmid

Department of Civil Engineering
Research Report No. 63-2
April 1963

Princeton University
Princeton, New Jersey

ACKNOWLEDGEMENTS

The work described in this paper was carried out as part of a research project for the Bureau of Yards and Docks, for whose help and advice the authors are much indebted.

Acknowledgement is also made to the IBM Corporation for the use of an IBM 650 computer.

SUMMARY

The strength and energy absorption characteristics of pile cluster dolphins are developed and computed using the theory of space structures. Numerical results are calculated with the help of an IBM 650 computer. Dolphins of three different sizes are then analyzed to determine their ultimate loads, their yield loads and the corresponding energy absorption capacities.

1. INTRODUCTION

Dolphins assist the safe maneuvering, berthing and mooring of ships on rivers and in harbors. Although often small and inconspicuous, they are nonetheless important waterfront structures that present intriguing problems to the designing engineer. A dolphin has two functions: to withstand the continuous pull of a moored ship and to absorb kinetic energy from a ship that strikes it. The former requires high strength, whereas the latter calls for a structure that is sufficiently flexible and resilient at high load to provide a large energy absorption capacity. To resolve this strength vs. flexibility paradox is one of the problems that has to be faced by the designer. It can best be done if the structural behavior of a dolphin is clearly understood.

From the viewpoint of construction, the simplest and most frequently used dolphin is the timber pile cluster dolphin of the type illustrated in Figure 1. This is, however, (from the viewpoint of structural analysis) a rather complicated space structure since normal forces, shears, bending moments and torques result in each of the individual piles producing a problem of high structural redundancy if there are more than just a few piles. Earlier it would have been a formidable and laborious task to resolve the system of linear equations resulting from the structural analysis of such a dolphin; but with the advent of the modern electronic computer this difficulty no longer exists.

The manner in which the loads in the piles of Figure 1 are transferred to the soil is still largely an unexplored and unsolved problem.

However, it is safe to assume that below a certain depth "d" the piles behave essentially as if they were rigidly fixed. Hence, as far as the structural analysis is concerned, the structural action of each pile may be approximated by assuming the embedded end of each pile to be fixed at the depth "d" below the mud line. This depth will of course depend upon the soil conditions and is reasonably small in firm, granular soil (about 5 pile diameters) and relatively large (10 to 20 diameters) in soft clays.

This paper presents the analysis of pile cluster dolphins of arbitrary size using an IBM 650 computer. The analysis is in two parts. First, an elastic analysis is carried out assuming all piles to be rigidly connected at the top of the dolphin - an assumption which is not fully justified in practice and which leads to low values of load* and energy capacity for a dolphin. This analysis gives the maximum load a dolphin can sustain and the maximum energy it can absorb without permanent deformations. The second part of the analysis calculates the ultimate load carrying and energy absorbing capacity of a dolphin by assuming that when each pile in turn reaches a certain value of axial load, it yields and continues to yield at constant load; i.e. depending whether it is in tension or compression, it is either pulled out or pushed in at constant load.

It is understood by the authors that the theory presented here may appear complicated for a routine dolphin design problem. It was developed in the course of a research project that compared the basic

---

* Some head flexibility will lead to a more even distribution of load to the piles, and hence to a greater overall strength.

behavior of various types of dolphins - pile cluster dolphins, single or multiple steel tube dolphins, etc. However, once the problem has been programmed on a computer, very little work is involved in changing the input data; i.e. the water depth, soil conditions, pile number and spacing, to obtain the solution to any specific problem.

It is also hoped that the results for the examples computed and presented will give designers a better appreciation of the structural action and load distribution in timber pile dolphins.

2. THEORY

The method used here to calculate the loads and deflections of the piles in a multi-pile dolphin is an amplification of that given in reference [1]. The problem is solved for forces rather than deflections because although solving for deflections would give a rather more elegant theory and somewhat fewer computer operations, it is hoped to be able to extend the method given here to deal with dolphins whose piles are allowed some slippage where they join. This has already been done for a two-dimensional dolphin with interesting results [1].

2.1 Notation and Sign Convention

C	Equilibrium matrix	X, Y	Horizontal axes
E	Modified flexibility		
F	Flexibility matrix - vertical axis	Z	Vertical axis
f	Flexibility matrix - pile axis	x, y, z	Pile axes
L	Moment about X-axis		
M	" " Y-axis		
N	" " Z-axes		
ℓ, m, n	Direction cosines of pile	α, β	Orientation of pile
n	Number of piles	θ	Rotation about x-axis
P	Load matrix	φ	Rotation about y-axis
P	Force along X-axis	ψ	Rotation about z-axis
Q	" " Y-axis		
R	" " Z axis	Δ	Deflection matrix
u	Deflection along X-axis	S	Force matrix
v	" " Y-axis		
w	" " Z-axis	T	Transformation matrix

"A right-hand Sign Convention is used - See Figure 2"

2.2 Equilibrium and Compatibility Equations

Consider a pile-cluster dolphin of the type shown in Figure 1, whose n piles are rigidly connected at the top. The geometry of two piles whose tops are in contact is shown in Figure 3.

If the dolphin is loaded at the top by a direct force P_a and a moment N_a about the vertical axis, then six equilibrium equations may be written.

$$\Sigma P_r = P_A \tag{1}$$

$$\Sigma Q_r = 0 \tag{2}$$

$$\Sigma R_r = 0 \tag{3}$$

$$\Sigma(L_r + R_r Y_r) = 0 \tag{4}$$

$$\Sigma(M_r - R_r X_r) = 0 \tag{5}$$

$$\Sigma(N_r - P_r Y_r + Q_r X_r) = N_a \tag{6}$$

For a symmetric dolphin, if the load P_a only is applied and N_a is zero, then equations (2) (4) and (6) can be dropped because of symmetry.

As there are in general 6 equilibrium equations and n x 6 unknowns, (n - 1) x 6 equations of compatibility are required for the solution of the problem. These are obtained as follows.

Consider a horizontal plane at the top of the dolphin and any two adjacent piles, which are assumed to be rigidly connected with no sliding or rotation relative to one another being allowed. Let their centers have coordinates $(X_1 Y_1)$ and $(X_2 Y_2)$ (Fig. 3). Then rotational compatibility of the two piles gives:

$$\theta_1 = \theta_2 \tag{7}$$

$$\varphi_1 = \varphi_2 \tag{8}$$

$$\psi_1 = \psi_2 \tag{9}$$

and translational compatibility gives:

$$u_2 = u_1 - \psi_1(Y_2 - Y_1) \tag{10}$$

$$v_2 = v_1 + \psi_1(X_2 - X_1) \tag{11}$$

$$w_2 = w_1 + \theta_1(Y_2 - Y_1) - \varphi_1(X_2 - X_1) \tag{12}$$

There are (n - 1) pairs of piles; hence, there are sufficient equations for the solution of the problem. As before, a symmetric loading reduces the number of compatibility equations from six to three.

2.3 Matrix Formulation

The deflections of any pile are given by

$$\begin{Bmatrix} u_r \\ v_r \\ w_r \\ \theta_r \\ \varphi_r \\ \psi_r \end{Bmatrix} = [F_r] \begin{Bmatrix} P_r \\ Q_r \\ R_r \\ L_r \\ M_r \\ N_r \end{Bmatrix}$$

or

$$\{\Delta_r\} = [F_r] \{S_r\} \tag{13}$$

where $[F_r]$ is the flexibility matrix of the pile, which will be defined in a later section. The compatibility equations for the first and second piles would then be

$$[F_2]\{S_2\} + [E_1]\{S_1\} = 0 \tag{14}$$

Where

$$[E_1] = \left[\begin{array}{ccc|ccc} -1 & & & 0 & 0 & -(Y_1 - Y_2) \\ & -1 & & 0 & 0 & +(X_1 - X_2) \\ & & -1 & (Y_1 - Y_2) & -(X_1 - X_2) & 0 \\ \hline & & & -1 & & \\ & & & & -1 & \\ & & & & & -1 \end{array}\right] [F_1]$$

The equations of equilibrium of the dolphin become

$$[C]\{S\} = \{P\} \tag{15}$$

where S is the 6n x 1 column matrix given by

$$\{S\} = \begin{Bmatrix} S_1 \\ S_2 \\ \cdot \\ \cdot \\ \cdot \\ S_n \end{Bmatrix}$$

P is the 6 x 1 load matrix

$$\begin{Bmatrix} P_a \\ 0 \\ 0 \\ 0 \\ 0 \\ 0 \\ N_a \end{Bmatrix}$$

and [C] is the 6 x 6n rectangular matrix.

$$\left[\begin{array}{c|c|c} C_1 & C_2 & \cdots\cdots \quad C_n \end{array}\right]$$

where the submatrices $[C_1]$ .... $[C_n]$ are

$$[C_r] = \left[\begin{array}{ccc|ccc} 1 & & & & & \\ & 1 & & & 0 & \\ & & 1 & & & \\ \hline 0 & 0 & -Y_r & 1 & & \\ 0 & 0 & X_r & & 1 & \\ Y_r & -X_r & 0 & & & 1 \end{array}\right]$$

We can now combine the equilibrium and compatibility equations into the single matrix equation:

$$\begin{bmatrix} E_1 & F_2 & & & \\ & E_2 & F_3 & & \\ & & E_3 & F_4 & \\ & & & & \\ C_1 & C_2 & \cdots & \cdots & C_n \end{bmatrix} \begin{Bmatrix} S_1 \\ S_2 \\ S_3 \\ \\ S_n \end{Bmatrix} = \begin{Bmatrix} \\ \\ 0 \\ \\ P \end{Bmatrix} \qquad (16)$$

2.4 Solution of Matrix Equation.

Equation (16) may be solved by inverting the square matrix directly. However, a shorter and more economical method is to use a step-by-step procedure as follows:

$$[E_1 F_2] \begin{Bmatrix} S_1 \\ S_2 \end{Bmatrix} = 0$$

$$\therefore \quad E_1 S_1 + F_2 S_2 = 0$$

$$\therefore \quad S = - E_1^{-1} F_2 S_2$$

Equation (15) can be written

$$C_1 S_1 + C_2 S_2 + \ldots + C_n S_n = P$$

$$\therefore \quad - C_1 E_1^{-1} F_2 S_2 + C_2 S_2 + \ldots + C_n S_n = P$$

or $\quad C_2' S_2 + C_3 S_3 + \ldots + C_n S_n = P$

where $C_2' = C_2 - C_1 E_1^{-1} F_2$

Similarly, $\quad C_3' = C_3 - C_2' E_2^{-1} F_3$

and $\quad C_n' = C_n - C_{n-1}' E_{n-1}^{-1} F_n$

and the system of equations condenses to

$$C_n' S_n = P$$

whence $\quad S_n = [C_n']^{-1} P$

We now know the loads in the nth pile. The deflections of this pile are given by

$$\Delta_n = F_n S_n$$

and the loads in all the other piles are determined by back substitution remembering that for the rth pile,

$$S_r = - E_r^{-1} F_{r+1} S_{r+1}$$

2.5 Flexibility Matrices

The flexibility matrix of a pile inclined as shown in Figure 2 may be obtained from the basic flexibility matrix of a vertical pile by means of a matrix transformation. It is assumed that the base of the pile is fixed at some point.

A vertical pile can have four distinct types of load applied to it (Fig. 4). We therefore have for such a pile the basic flexibility matrix f:

$$f = \begin{vmatrix} u/P & 0 & 0 & 0 & u/M & 0 \\ 0 & v/Q & 0 & v/L & 0 & 0 \\ 0 & 0 & w/R & 0 & 0 & 0 \\ 0 & \theta/Q & 0 & \theta/L & 0 & 0 \\ \varphi/P & 0 & 0 & 0 & \varphi/M & 0 \\ 0 & 0 & 0 & 0 & 0 & \psi/N \end{vmatrix}$$

where, for piles of constant section,

$$u/P = L^3/3EI$$

$$\varphi/P = - L^2/2EI$$

$$n/M = - L^2/2EI$$

$$\varphi/M = L/EI$$

$$\psi/N = L/GJ$$

$$w/R = L/EA$$

To obtain the flexibility matrix F of an inclined pile, a transformation must be made of the form

$$F = T'f\,T \tag{17}$$

where T is the 6 x 6 transformation matrix.

$$T = \begin{bmatrix} \ell_x & m_x & n_x & 0 & 0 & 0 \\ \ell_y & m_y & n_y & 0 & 0 & 0 \\ \ell_z & m_z & n_z & 0 & 0 & 0 \\ 0 & 0 & 0 & \ell_x & m_x & n_x \\ 0 & 0 & 0 & \ell_y & m_y & n_y \\ 0 & 0 & 0 & \ell_z & m_z & n_z \end{bmatrix}$$

For the axis system shown in Figure 2,

$\ell_x = \cos\alpha$ $\quad m_x = -\sin\alpha$ $\quad n_x = 0$

$\ell_y = \sin\alpha\cos\beta$ $\quad m_y = \cos\alpha\cos\beta$ $\quad n_y = -\sin\beta$

$\ell_z = \sin\alpha\sin\beta$ $\quad m_z = \cos\alpha\sin\beta$ $\quad n_z = \cos\beta$

2.6 Symmetric Case Flexibility Matrix

Where a symmetric dolphin is loaded only by a horizontal force through its axis of symmetry, the transformation matrix becomes degenerate and the final flexibility matrix is reduced in size to become a 3 x 3 matrix. The new transformation matrix is

$$T_s = \begin{bmatrix} \ell_x & n_x & 0 \\ \ell_y & n_y & 0 \\ \ell_z & n_z & 0 \\ 0 & 0 & m_x \\ 0 & 0 & m_y \\ 0 & 0 & m_z \end{bmatrix}$$

and equation (17) becomes

$$F_s = T_s' \cdot f \cdot T_s$$

Matrices $[C_r]$ and $[E]$ are similarly reduced to 3 x 3 matrices so that the square matrix of equation (16) becomes a 3n x 3n matrix.

3. ASSUMPTIONS AND DATA

In performing the calculations, it was assumed that all the piles of a dolphin were rigidly connected to each other at the top and, for the initial elastic analysis, that they were all built in at their lower ends some distance "d" below the mud line. To allow for the position of this point of fixity and for the fact that the head of the dolphin must be some way above the surface of the water, the lengths of the piles were taken to be 10 ft. greater than the water depth in all cases.

Three types of pile-cluster dolphins were analyzed, made of 7, 19 and 30 piles. The calculations were performed for assumed water depths of 20, 40 and 60 feet, the different cases considered being shown in Table 1. The piles were assumed to be driven in the geometrical patterns shown in Figure 5, which also shows the two orientations of the dolphins. It was further assumed that all piles had a uniform diameter of 1 ft., a Young's modulus of 1.7×10^5 kips/ft^2 and a shear modulus of 0.8×10^5 kips/ft^2. The relevant flexibility coefficients are then given in Table 2.

Table 1. Cases Considered

Case	No. of Piles	Orientation	Effective Length Ft.	Water Depth Ft.
1	7	1	30	20
2	7	2	30	20
3	19	1	30	20
4	19	2	30	20
5	19	1	50	40
6	19	2	50	40
7	19	1	70	60
8	19	2	70	60
9	30	1	50	40
10	30	2	50	40
11	30	1	70	60
12	30	2	70	60

Table 2. Pile Data

Flex. coefficients \ Pile length (ft)	30	50	70
u/p	1.071	4.95	13.6
w/R	.000224	.000373	.000522
θ/L	.00357	.00595	.00833
ψ/N	.00382	.00637	.00891
u/N	.0536	.149	.292

4. RESULTS OF "ELASTIC" ANALYSIS

Both observed failures and experimental results from model and full-scale tests [2],[3] have shown that a pile cluster dolphin usually fails when the most heavily stressed tension piles are pulled out of the soil, after which the compression piles either break or are also pulled out. The latter can only happen when the deflection of the dolphin is very large. This type of failure occurs because the ultimate force required to pull a pile is usually considerably less than the force required to push it further into the soil. If the latter is called the bearing capacity of the pile, the pull-out value is often assumed to be one-half the bearing capacity.

For the calculations, it was assumed that the load-deflection diagram for a pile in tension as shown in Figure 6, curve A can with sufficient accuracy be approximated by the idealized curve B. This assumes that the load P on the tension pile increases linearly with the deflection up to the pull-out value P_y, and that thereafter the pile continues to deform at constant load. As P_y depends on the soil conditions and the depth of the embedment, it was assumed to be an independent parameter. According to this idealized behavior, therefore, there is a range of "elastic" load-deflection behavior in which no pile is subjected to a tension load greater than the pull-out value P_y.

The distribution of forces among the different piles of a dolphin was determined by applying a unit horizontal load to the structure. A typical load distribution is shown in Figure 7. It can be seen that by far the biggest load is carried by piles No. 1 and 5, the two

extreme piles in the plane of loading. Although this type of distribution was expected, the difference in load carried by the various piles seemed much too great. For example, the horizontal components of the two outer piles constitute about 45% of the total horizontal load. However, careful and repeated checking and analysis of the computer solution confirmed the result.

Because of this load distribution, a dolphin of circular plan is rather inefficient as a structure, being able to absorb only a very small amount of energy before yielding takes place. The assumption of rigid connections at the top of the dolphin does however lead to a conservative result. In an actual dolphin, the slight flexibility present between the piles will allow the load to be distributed more evenly between the piles, thus allowing the dolphin to carry a greater load before any yielding of the piles takes place. Thus, its recoverable energy absorption would be much greater.

If the pull-out value of the highest-loaded pile is divided by the maximum tensile load in it due to H = 1, the maximum horizontal load capacity for which the deformation of the dolphin is recoverable will be obtained. The energy that is absorbed up to this point is termed the "elastic" energy, though, of course, the differences between curves A and B in Figure 6 mean that some permanent (i.e. inelastic) deformation may be possible even before that load is reached. The results in terms of unit pull-out value are given in Table 3 and Figures 8 and 9.

Case	Piles	Orientation	Depth ft	Max. force kip/kip	Max. deflex. ft/kip	max energy ft.kip/kip^2
1	7	1	20	.268	.00419	.00056
3	19	1	20	.680	.00316	.00107
5	19	1	40	.406	.00855	.00173
7	19	1	60	.290	.0168	.00244
9	30	1	40	.574	.0075	.00216
11	30	1	60	.474	.0117	.00278
2	7	2	20	.520	.0089	.00232
4	19	2	20	.487	.0025	.00060
6	19	2	40	.293	.0054	.00079
8	19	2	60	.209	.0106	.00111
10	30	2	40	.545	.0071	.00193
12	30	2	60	.424	.0106	.00225

Table 3. Summary of Results for Elastic Calculations.

c. RESULTS OF ULTIMATE ANALYSIS

It was deemed important to supplement the elastic analysis of pile cluster dolphins with an estimate of the ultimate load carrying and energy absorbing capacities of the structure. This estimate was calculated in the following way.

It was assumed that as soon as the first pile reached its pull-out value, it began to yield at a constant load. On such a pile, the lateral and bending moment loads were thereafter neglected. The calculations were performed only for dolphins loaded in orientation 1; and it was further assumed that the pull-out value of a pile was equal to its bearing load.

The results of the analysis are summarized in Table 4 and are plotted in Figures 10, 11, and 12. It can be seen that, compared with the recoverable load and energy, the ultimate capacity of a dolphin is very much greater. As would be expected, the deflections are very large. For example, the 30-pile dolphin in a depth of 60 ft. of water will theoretically deflect 24 ft. for a 10 kip horizontal load (and will absorb 673 ft. kips while doing so). With such large deformations, the theory cannot be expected to hold accurately; but it is undoubtedly a good estimate of the action of a dolphin in practice.

Table 4.

No. of piles	Water Depth ft.	Ultimate load kip/kip	Deflection at ultimate load ft/kip	Energy absorbed to ultimate load ft. kip/kip^2
7	20	0.45	.0262	.00847
19	20	2.96	1.30	.281
	40	1.78	.359	.465
	60	1.28	.703	.655
30	40	3.77	.782	2.22
	60	3.83	2.42	6.73

6. CONCLUSION

It is concluded that a timber pile cluster dolphin of circular plan is an inefficient structure in the elastic range, particularly if its piles are connected together rigidly at their heads. A comparatively small load will cause yielding of the tension piles, and repeated loads will gradually cause the dolphin to fail. However, the ultimate load-carrying and energy absorbing capacity of such a dolphin is good, even though use of this capacity will result in an unserviceable dolphin. It is suggested that experimental work be carried out on model dolphins with slightly flexible head connections to try to find an optimum type of head design, which, it is felt, might considerably improve this type of dolphin.

REFERENCES

1. CARIOTI, B. M., ELMS, D. G., PEACE, R. C. - "Dolphin Design" Master's Thesis, Princeton University, Department of Civil Engineering, 1961

2. TSCHEBOTARIOFF, G.P. - "The Resistance to Lateral Loading of Single Piles and Pile Groups." A.S.T.M. Symp. on Lateral Loads on Piles and Pile Groups, Special Pub. # 154, pp 1-11.

3. Bureau of Yards and Docks Public Works Drawing E. 98

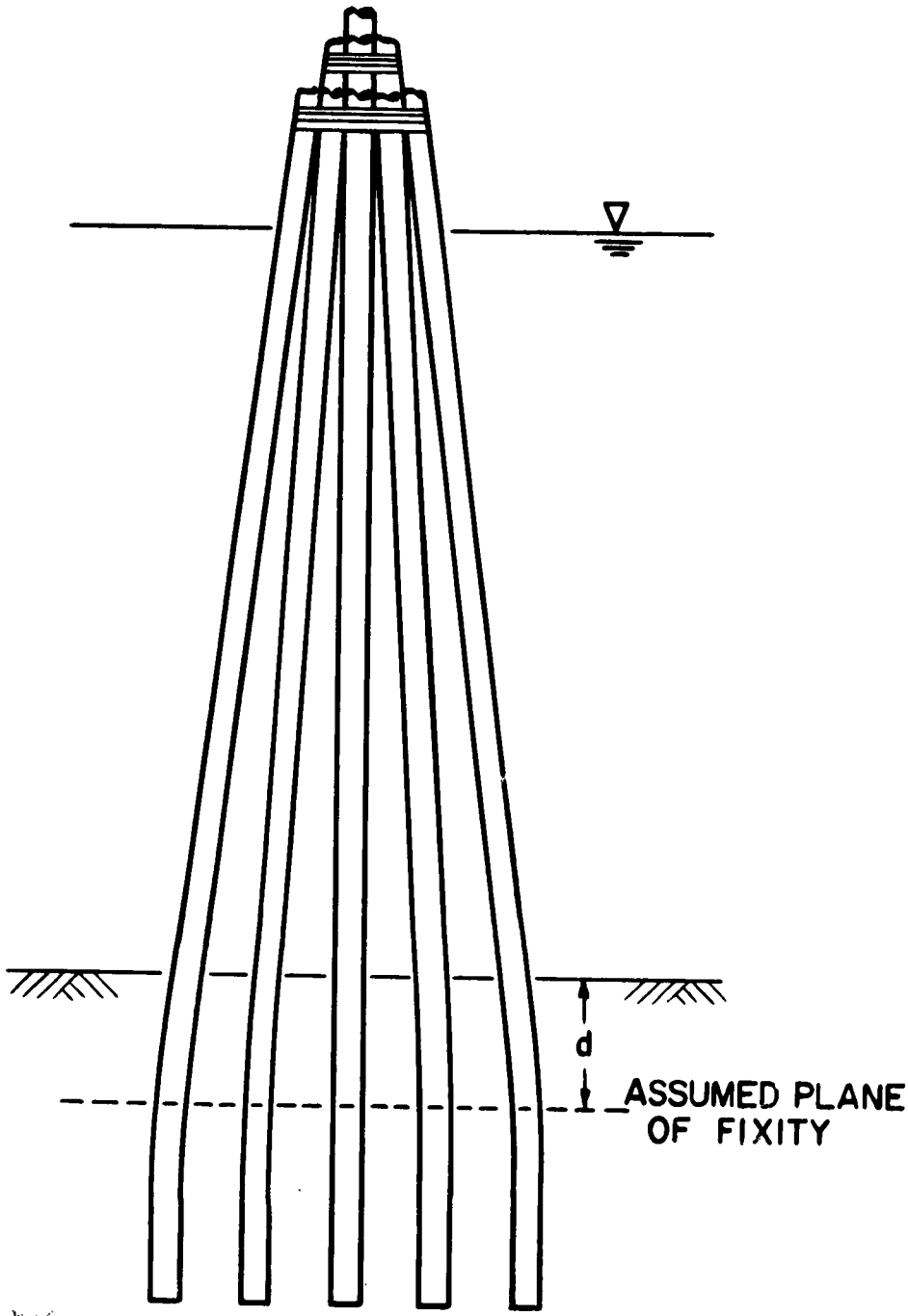

FIGURE 1 PILE CLUSTER DOLPHIN

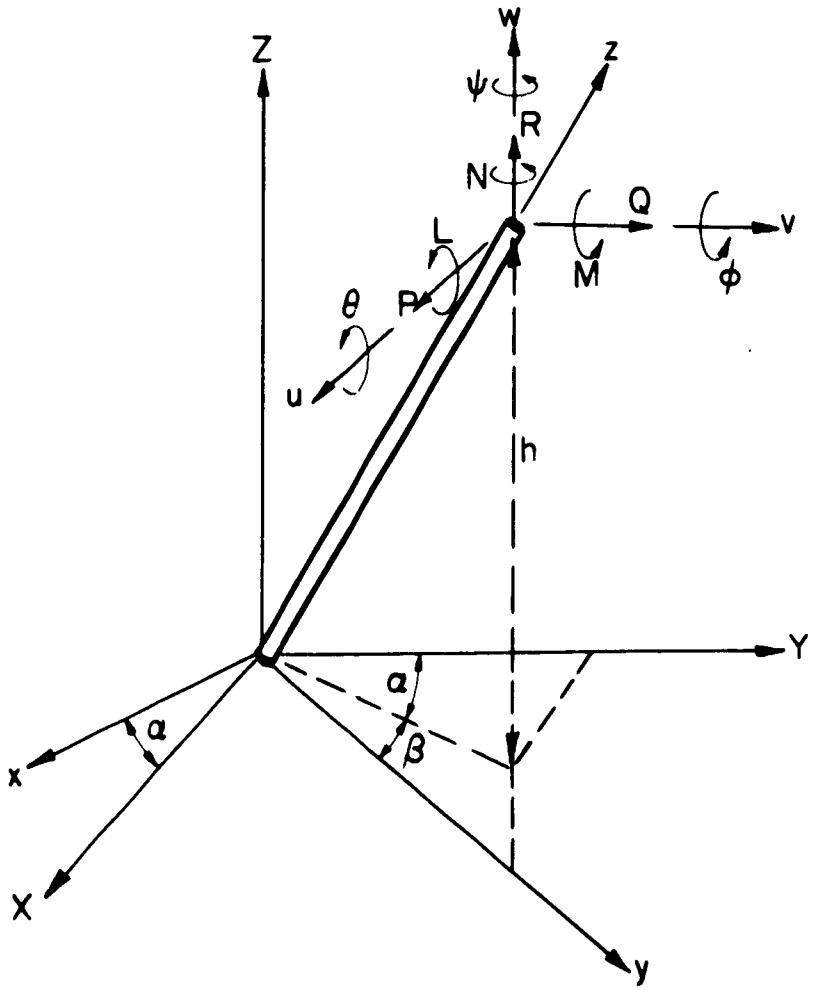

FIGURE 2 PILE NOTATION

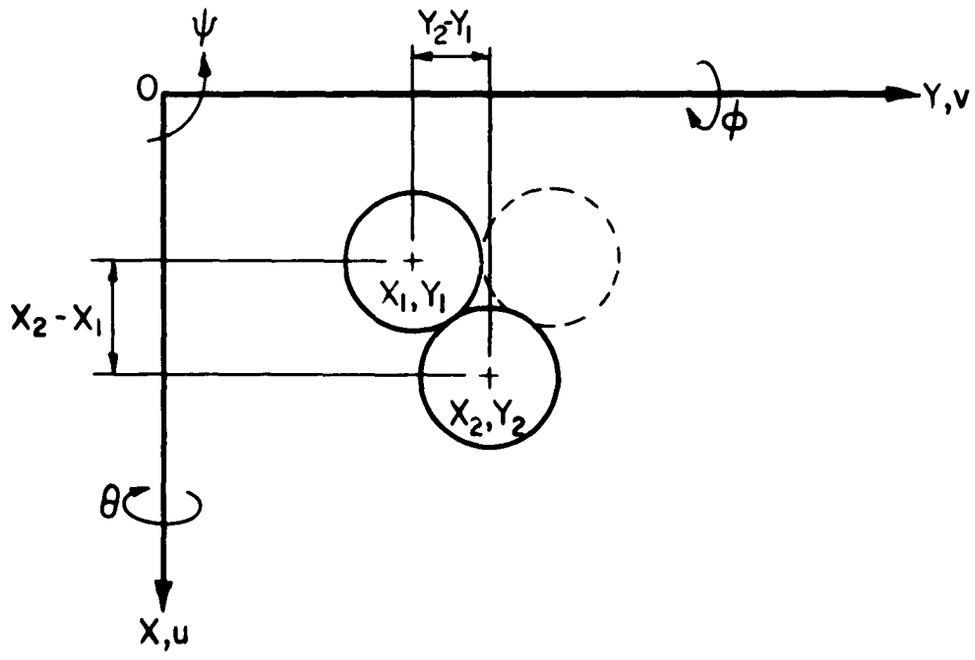

FIGURE 3 PILE TOP COORDINATES

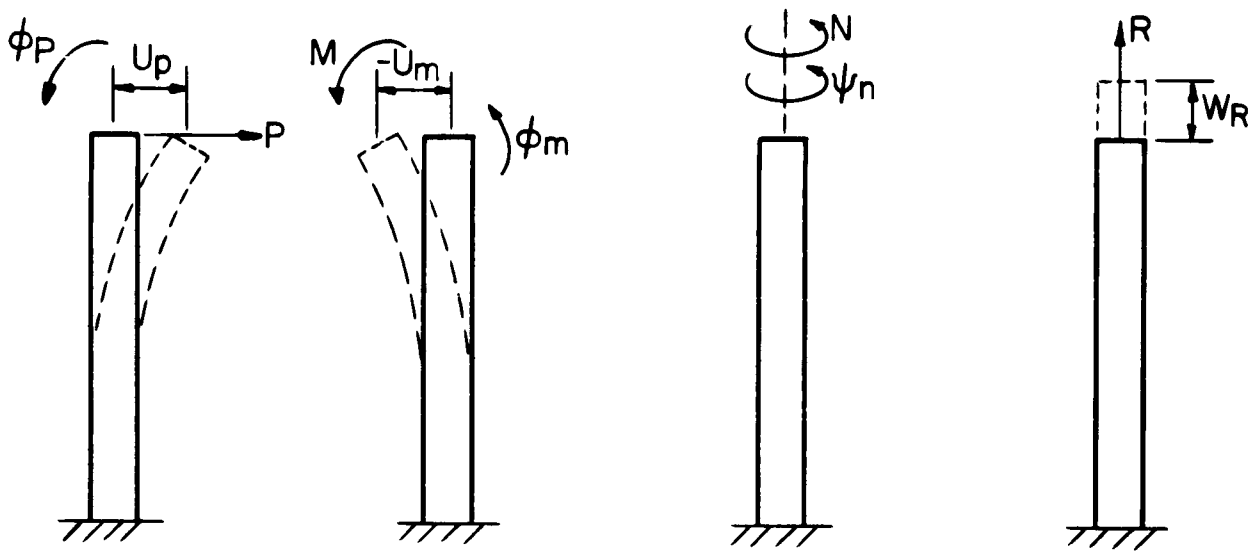

FIGURE 4 PILE FLEXIBILITY

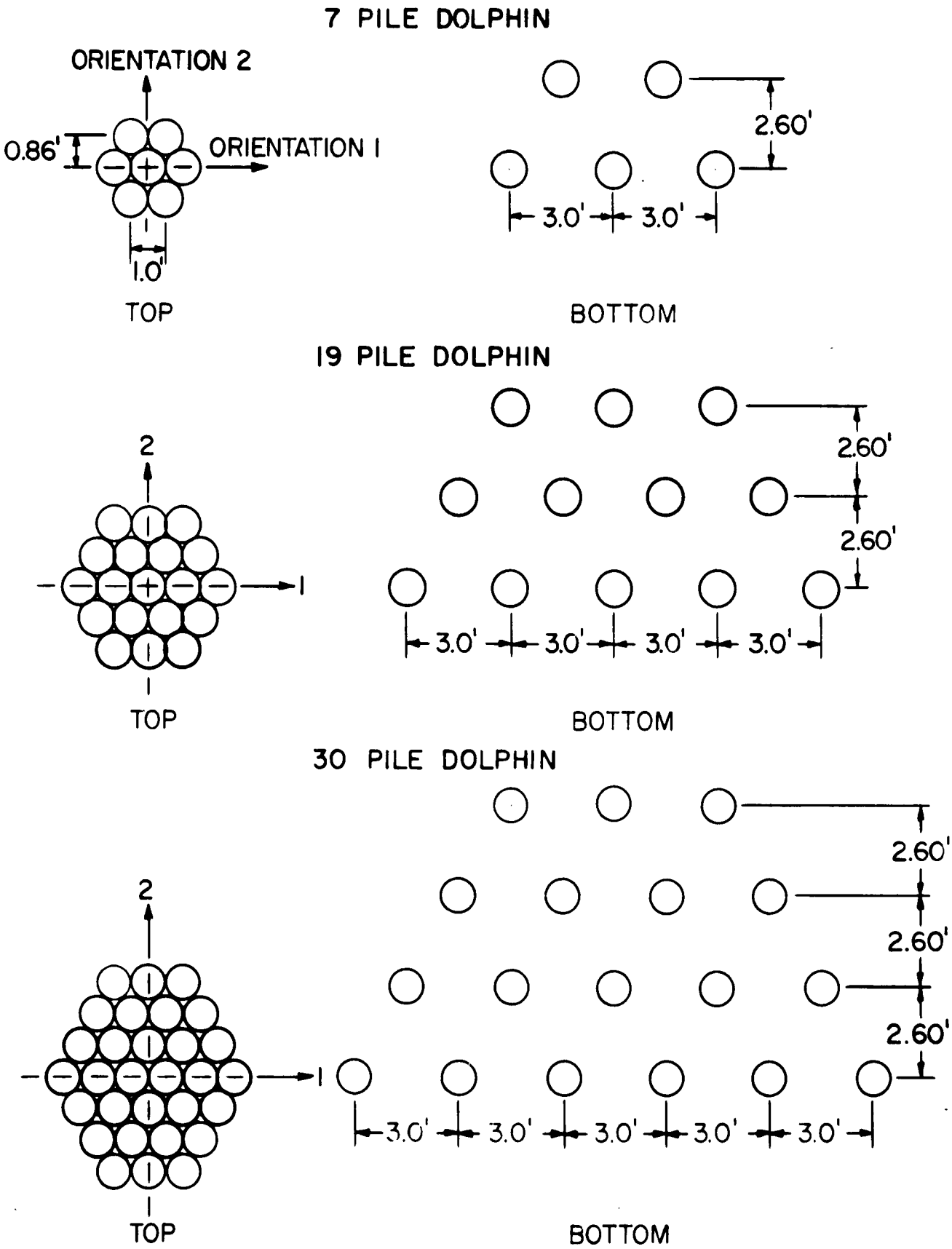

FIGURE 5 PILE GROUPING

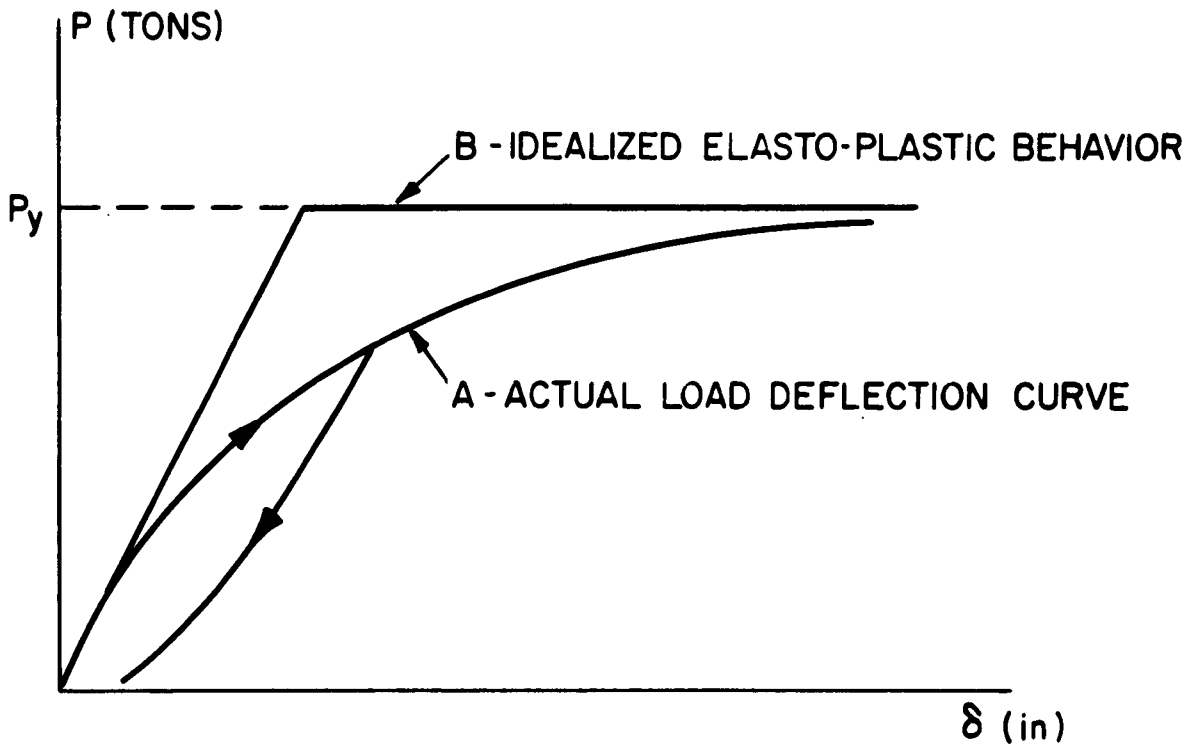

FIGURE 6 LOAD DEFLECTION CURVES

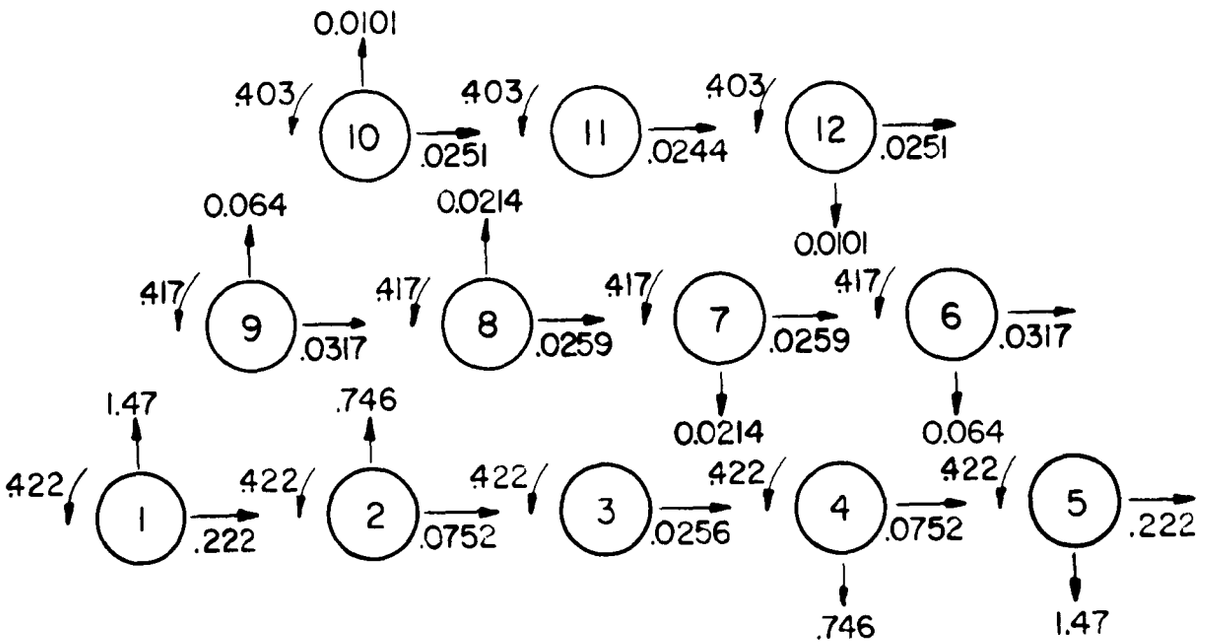

FIGURE 7 FORCES AND MOMENTS ON HEAD OF EACH PILE FOR ONE KIP HORIZONTAL LOAD: 19-PILE DOLPHIN IN 20 FEET OF WATER.

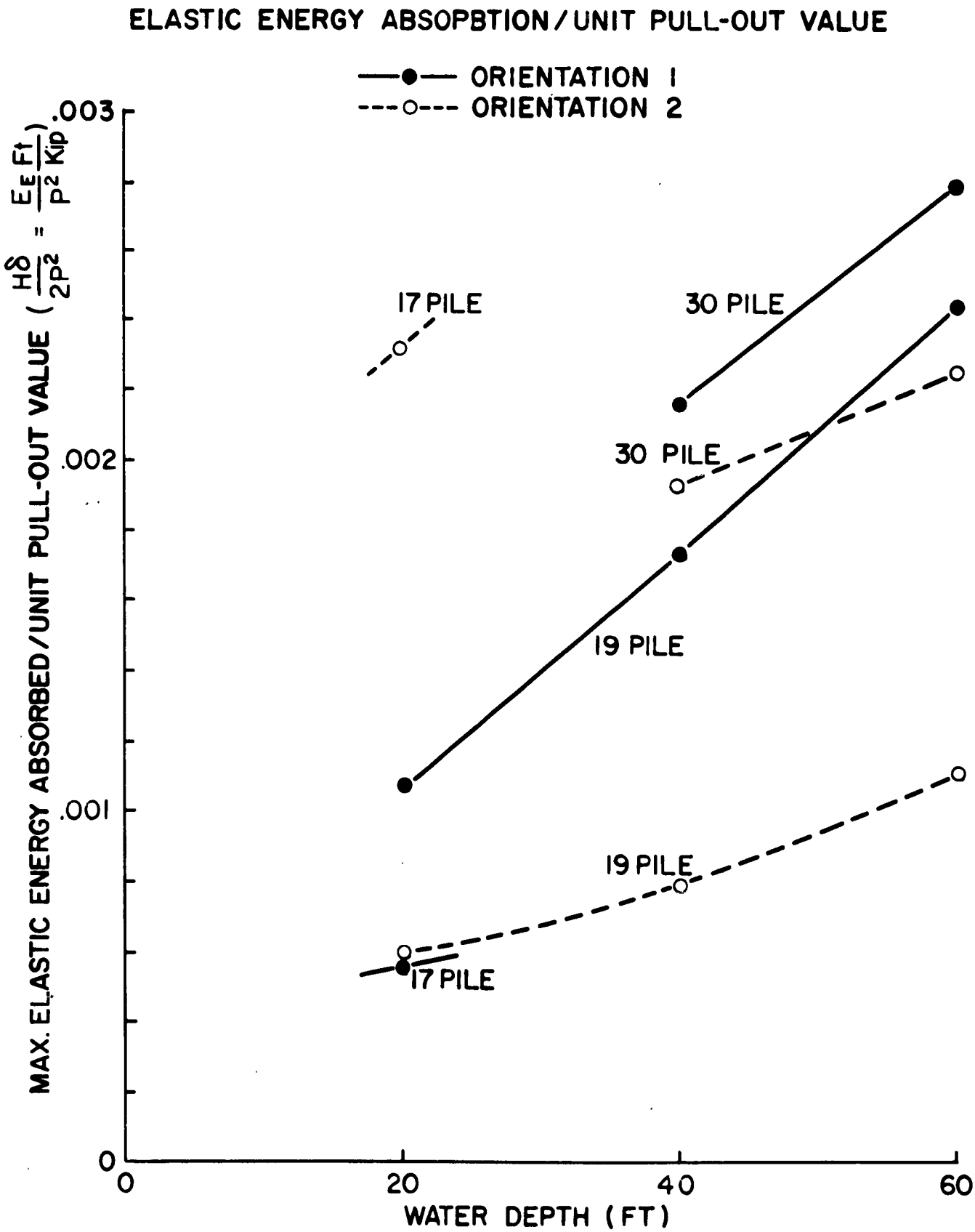
ELASTIC ENERGY ABSOPBTION/UNIT PULL-OUT VALUE
ORIENTATION 1
ORIENTATION 2
MAX. ELASTIC ENERGY ABSORBED/UNIT PULL-OUT VALUE (Hδ/2P² = E_E Ft/P² Kip)
.003
.002
.001
0
17 PILE
30 PILE
30 PILE
19 PILE
19 PILE
17 PILE
0
20
40
60
WATER DEPTH (FT)

FIGURE 8

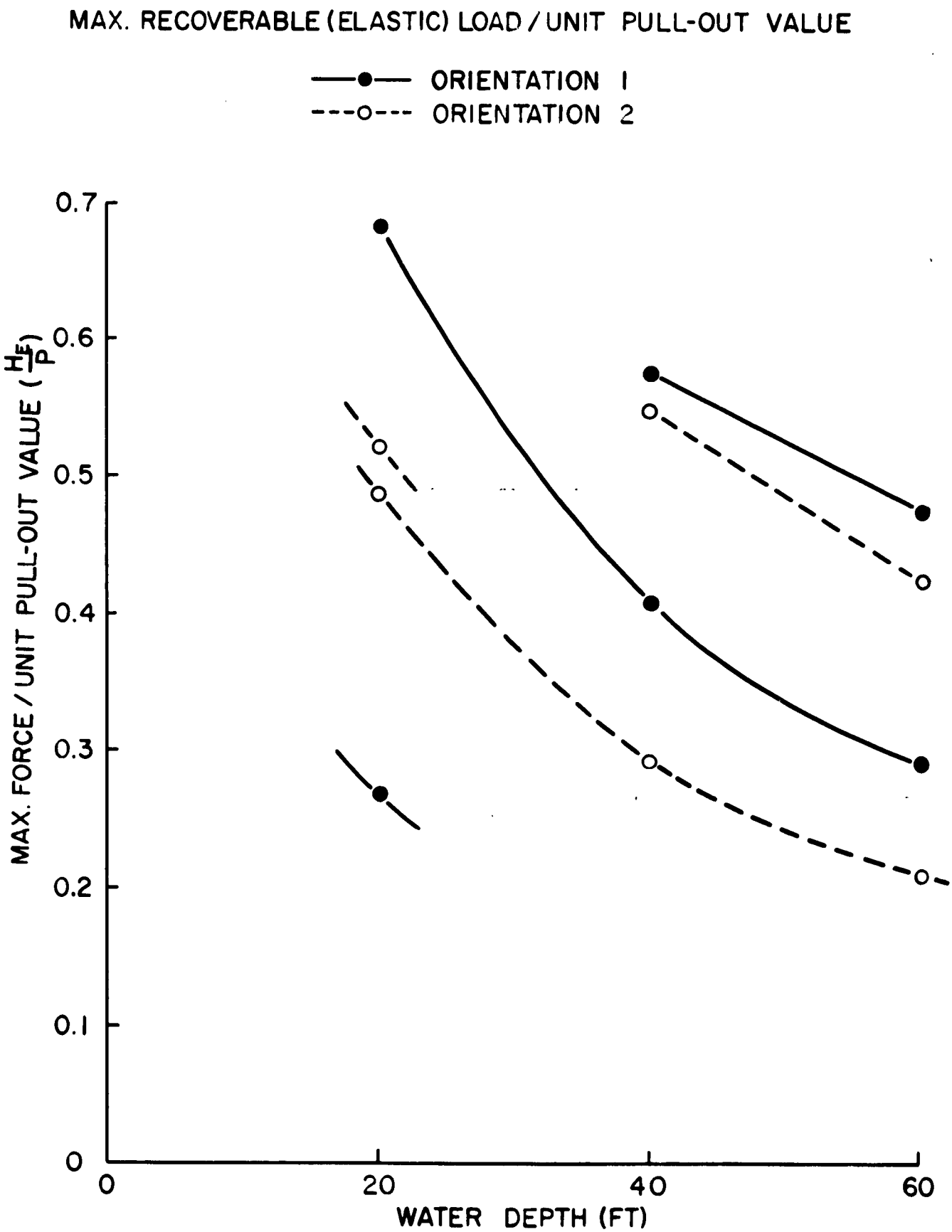
MAX. RECOVERABLE (ELASTIC) LOAD / UNIT PULL-OUT VALUE
ORIENTATION 1
ORIENTATION 2
MAX. FORCE / UNIT PULL-OUT VALUE ($\frac{H_E}{P}$)
0.7
0.6
0.5
0.4
0.3
0.2
0.1
0
0
20
40
60
WATER DEPTH (FT)

FIGURE 9

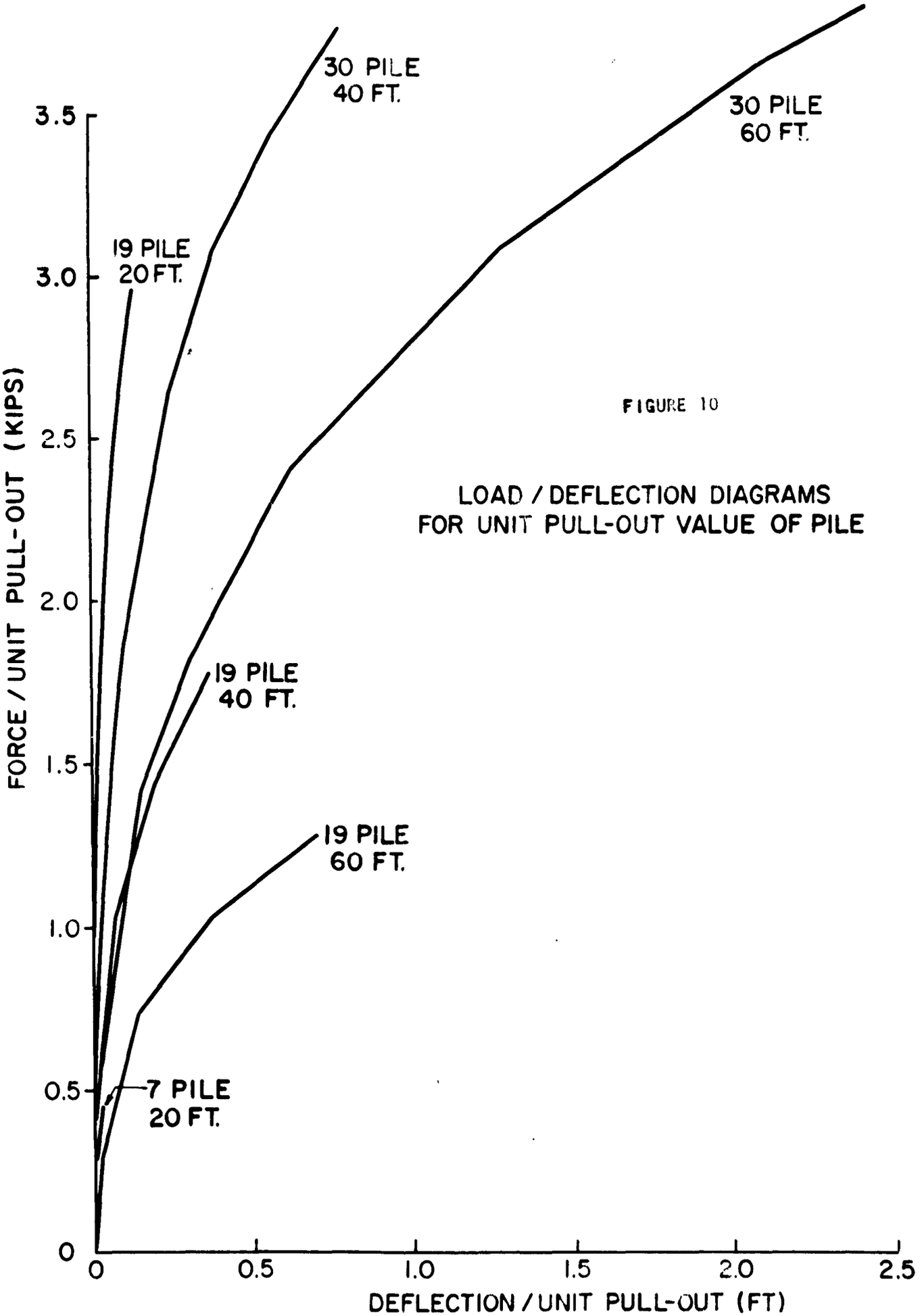

FIGURE 10

LOAD / DEFLECTION DIAGRAMS
FOR UNIT PULL-OUT VALUE OF PILE

ULTIMATE ƎE HORIZONTAL LOAD FOR UNIT
PULL-OU0 OUT VALUE / WATER DEPTH

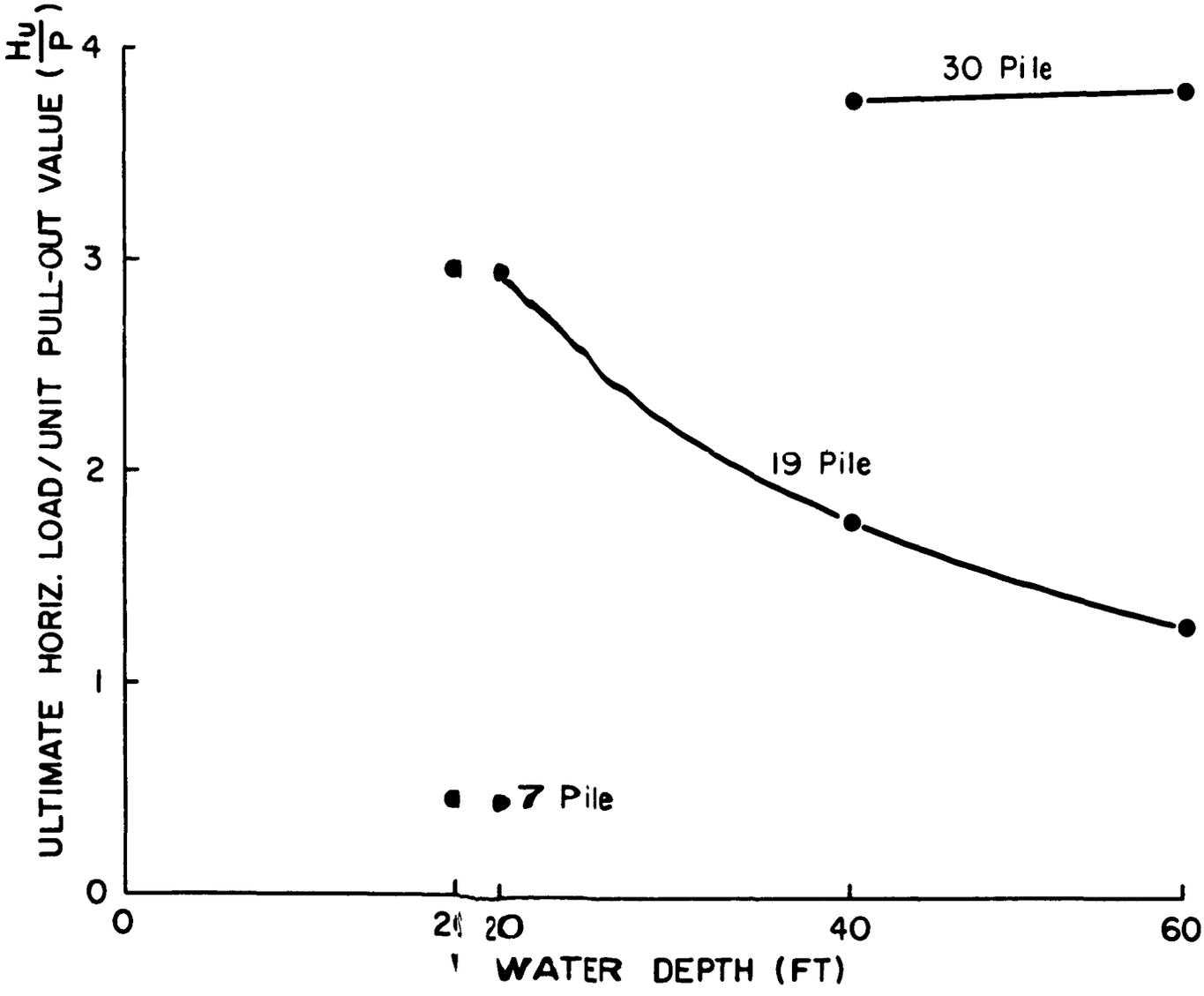

FIGURE 11

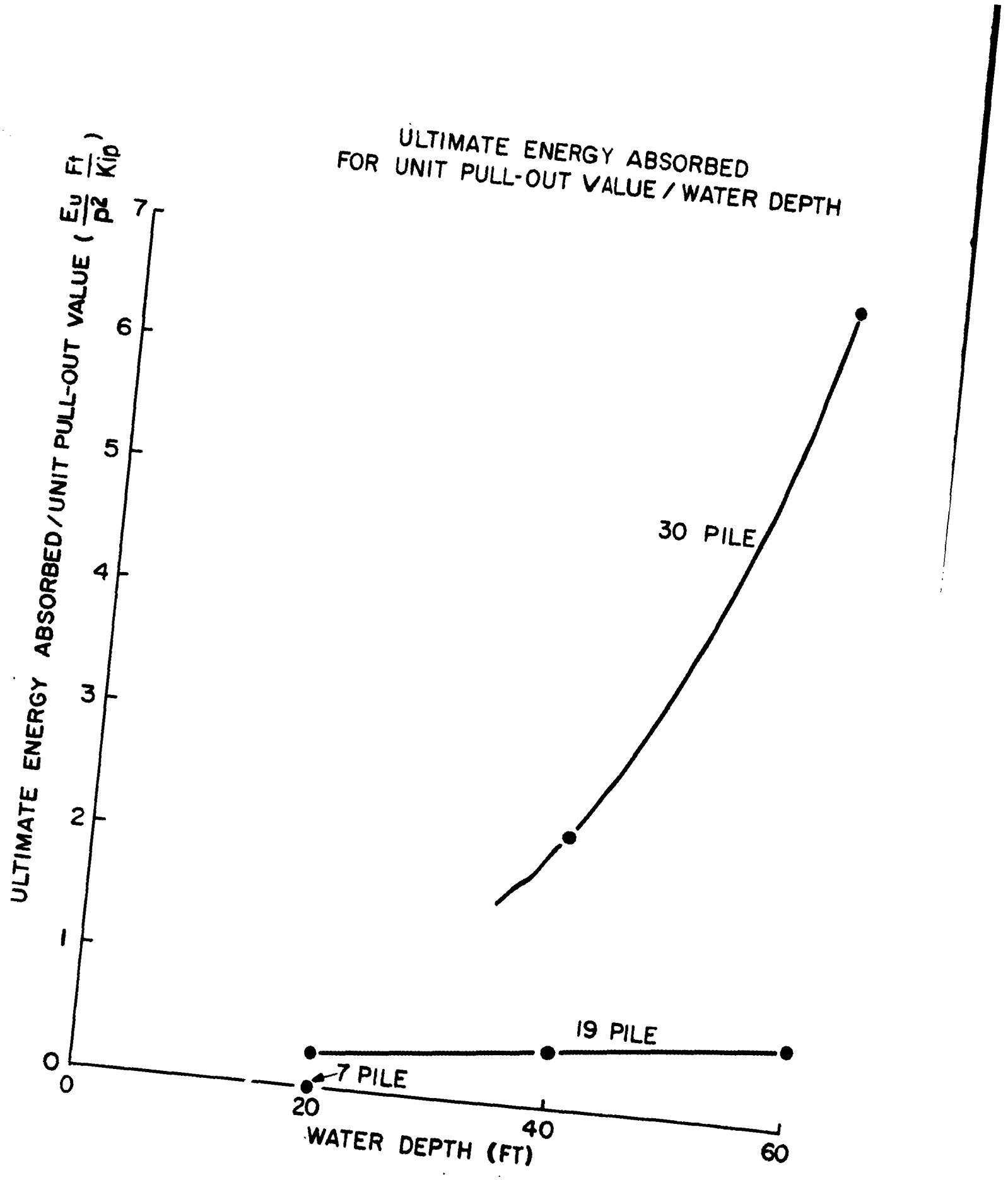
ULTIMATE ENERGY ABSORBED
FOR UNIT PULL-OUT VALUE / WATER DEPTH
ULTIMATE ENERGY ABSORBED / UNIT PULL-OUT VALUE (Eu/D² Ft/Kip)
7
6
5
4
3
2
1
0
0
30 PILE
19 PILE
7 PILE
20
40
60
WATER DEPTH (FT)

FIGURE 12

UNCLASSIFIED

UNCLASSIFIED