UNCLASSIFIED

AD NUMBER
AD435573
NEW LIMITATION CHANGE
TO Approved for public release, distribution unlimited
FROM Distribution authorized to U.S. Gov't. agencies and their contractors; Administrative/Operational Use; 31 OCT 1963. Other requests shall be referred to Army Electronics Research and Development Command, Fort Monmouth, NJ 07703.
AUTHORITY
NZBS ltr dtd 9 Mar 1965

THIS PAGE IS UNCLASSIFIED

UNCLASSIFIED

AD 435573

DEFENSE DOCUMENTATION CENTER

FOR

SCIENTIFIC AND TECHNICAL INFORMATION

CAMERON STATION, ALEXANDRIA, VIRGINIA

UNCLASSIFIED

NOTICE: When government or other drawings, specifications or other data are used for any purpose other than in connection with a definitely related government procurement operation, the U. S. Government thereby incurs no responsibility, nor any obligation whatsoever; and the fact that the Government may have formulated, furnished, or in any way supplied the said drawings, specifications, or other data is not to be regarded by implication or otherwise as in any manner licensing the holder or any other person or corporation, or conveying any rights or permission to manufacture, use or sell any patented invention that may in any way be related thereto.

435573

CATALOGED BY DDC
AS AD No. 435573

ORGANIC FILM TUNNELING EFFECTS AND DEVICES

T. P. BRODY, R. M. HANDY AND L. C. SCALA

FINAL REPORT

NOVEMBER 1, 1962 TO OCTOBER 31, 1963

TO

U. S. ARMY ELECTRONICS RESEARCH AND DEVELOPMENT LABORATORY
FT. MONMOUTH, NEW JERSEY

CONTRACT NO. DA36-039AMC-00072
PROJECT NO. 1G6 22001 A 056

OBJECT: To investigate charge transfer phenomena across ultrathin organic dielectric films

WESTINGHOUSE ELECTRIC CORPORATION RESEARCH REPORT 63-961-900-R4

DDC
APR 17 1964

NO OTS

AVAILABILITY NOTICE: Qualified Requestors May Obtain Copies of this Report from DDC. Release to OTS Not Authorized.

ORGANIC FILM TUNNELING EFFECTS AND DEVICES

T. P. Brody, R. M. Handy and L. C. Scala

Final Report

November 1, 1962 to October 31, 1963

to

U.S. Army Electronics Research and Development Laboratory

Fort Monmouth, New Jersey

Contract No. DA36-039AMC-00072
Project No. 1G6 22001 A 056

Object: To investigate charge transfer phenomena across ultrathin organic dielectric films

Westinghouse Electric Corporation Research Report 63-961-900-R4

Table of Contents

List of Illustrations 2

1. Purpose 4

2. Abstract 5

3. Publications, Reports, Talks, Conferences 6

4. Factual Data 7
   - 4.1 Introduction 7
   - 4.2 Properties of Stearate Layers 10
     - 4.2.1 General Considerations 10
     - 4.2.2 Observed versus Predicted Thickness 16
     - 4.2.3 Low Voltage Resistivity versus Thickness 20
     - 4.2.4 Current-Voltage Characteristics and Temperature Dependence 22
     - 4.2.5 Autoradiographs of Stearate Layers 23
   - 4.3 Properties of Polyvinyl Benzoate Layers 31
     - 4.3.1 General Considerations 31
     - 4.3.2 Observed Thickness and Film Structure 34
     - 4.3.3 Irradiation Studies 41
     - 4.3.4 Current-Voltage Characteristics and Temperature Dependence 42
   - 4.4 Other Techniques and Materials 45
     - 4.4.1 Interfacial Polycondensation 45

5. Overall Conclusions 51

6. Recommendations for Future Work 53

7. Appendix 55
   - 7.1 Preparation of Glass Slides for Electrode Evaporation and Organic Thin Layer Deposition 55
   - 7.2 Thin Layer Deposition by the Langmuir Method 57
   - 7.3 Completion of Metal-Organic Insulation Metal Sandwiches 65

8. References 68

9. Research Staff 69

Distribution List

TDS Card

LIST OF ILLUSTRATIONS

Fig. 1 Reciprocal capacity vs predicted number of layers

Fig. 2 Capacity and Capacity x Dissipation Factor vs Frequency

Fig. 3 Low voltage resistivity vs observed number of layers

Fig. 4 Current-voltage characteristics at 0.1 cps of a Sn -3 layer calcium stearate - Sn sandwich of ~ 1 sq. mm area at two temperatures. Polarity is that of organic coated tin base layer. (Sample #142, Junction No. 5)

Fig. 5 Current voltage characteristics of a one- and five-layer Sn-stearate-Sn sample.

Fig. 6 Plot of current versus temperature at constant voltage for two junctions. Junction (142-5), upper curve, is ~ 3 monolayers thick. Junction (188-3), three lower curves, is ~ 5 monolayers thick. Polarity of test voltage is organic coated base electrode positive.

Fig. 7 Temperature dependence of resistance at constant voltage. Current required to develop 0.2 volts across sample as ordinate versus temperature in degrees centigrade as abscissa. (Sample #142, junction No. 5)

Fig. 8 Plot of $\log\left(\frac{I}{T^2}\right)$ versus $\left(\frac{1}{T}\right)$ and $\log\left(\frac{I - I'}{T^2}\right)$ versus $\left(\frac{1}{T}\right)$ where I = total current, I' = low temperature current in amperes, and T = absolute temperature. (Sample #142, junction No. 5)

Fig. 9 Autoradiographs of radioactive Ba stearate and Ba stearate: PVB mixture mono- and multilayers. From the top: a) one monolayer of Ba stearate over tin strip on glass; b) one monolayer of Ba stearate over tin and copper stripes on glass, showing different contact angles between aqueous subphase and glass or metal; c) one, three and five monolayer steps of Ba stearate; d) one, three and five monolayer steps of equiweight mixture of Ba stearate and PVB.

Fig. 10 Pressure/area isotherm for an equiweight mixture of polyvinylbenzoate and stearic acid.

Fig. 11 Plot of reciprocal capacitance $\frac{1}{C}$ in mm^2/nF as a function of the number of transfer strokes N_p for samples of polyvinyl benzoate and polyvinyl benzoate plus stearic acid mixture between evaporated tin electrodes. Electrode area ~ 1 mm^2. Capacity measured using 1 Kc signals of $\ll 50$ mv p-p. Shaded bars near origin show distribution of far off-line points when reflected in dashed line of slope 0.132.

LIST OF ILLUSTRATIONS
(Continued)

Fig. 12 Capacity and capacity x dissipation factor vs frequency for a PVB sample.

Fig. 13 Extrapolation of CD vs C to obtain C_∞ .

Fig. 14 Low voltage resistivity vs 1/C for PVB and PVB-stearic acid samples.

Fig. 15 V-I characteristics for PVB film showing memory effects ($T = 300^{\circ}K$)

Fig. 16 I vs 1/T for PVB sample showing memory effects

Fig. 17 Langmuir Film Apparatus - Overall View

Fig. 18 Film Balance Assembly, Front View

Fig. 19 Film Balance Assembly, Top View

Fig. 20 Film Balance Assembly, End View

Fig. 21 Photograph of Langmuir trough and film balance showing monolayer film being transferred onto sample. The sample is a 1" x 3" glass slide on which electrodes have been formed by vacuum evaporation.

Fig. 22 Enlargement of central portion of Fig. 21 showing the electrode arrangement on the sample and meniscus formed with the surface of the Langmuir bath. There are 9 narrow electrodes and 2 wide pads running parallel with the narrow dimensions of the slide. The 1st, 3rd, 5th, 7th, and 9th electrodes are gold. The remainder and the end pads are tin. Note the difference in the wetting of the gold and tin electrodes.

Fig. 23 Circuit used for measuring I-V characteristics.

Fig. 24 Variable temperature sample holder used for I-V measurements.

1. PURPOSE

The purpose of this project was the investigation of conduction phenomena in sandwich structures consisting of two conductors separated by an ultrathin organic layer. The study of tunneling mechanism was of primary interest because of its speed and insensitivity to temperature.

Ultrathin insulating organic films were to be prepared in several manners, with the aim of establishing reliable fabrication methods in the attempt to determine the feasibility of developing improved tunnel-effect and related thin film devices.

2. ABSTRACT

Thin organic insulator films were prepared by an improved Langmuir film technique, by evaporation and by interfacial polycondensation. Barium and calcium stearate, stearic acid, hexacosanoic acid and polyvinyl benzoate (PVB) monolayers were transferred by the Langmuir method, and the electrical properties of these films, sandwiched between evaporated electrodes of various metals, were studied. The mechanisms of film deposition and the structure of the resulting monolayers is discussed.

Monolayers could be successfully transferred only onto chemically active substrates, such as Sn or Cu. With these electrodes, the conduction process through mono-and multilayer films could be described in terms of a combined tunneling and Schottky-emission mechanism, with an activation energy of $\sim$ 0.25 eV. It was established that the underlying metal oxide associated with the electrodes had no effect on the current-voltage characteristics and temperature behavior, except very near the origin, and that monolayer deposition by the Langmuir process is one of considerably difficulty, if completely homogeneous void-free films are required.

γ-ray irradiation and autoradiographic studies on films of PVB were also made. Evidence for radiation-induced cross-linkage was obtained for bulk PVB, but results on monolayers were inconclusive.

From a combination of capacity measurements, molecular weight and bond-length considerations it was concluded that the stable "monolayer" of PVB is composed of 3-4 interlocking layers of molecules.

Some interesting memory effects have been observed in sandwiches formed with PVB, which may find application as analog memory elements.

Work on interfacial polycondensation of polyhexamethylene sebacamide indicated a possible approach to monolayer formation. Exploratory study of ultraviolet irradiation of evaporated Formvar and styrene film showed heavy degradation of Formvar. No electrical effects attributed to irradiation have been ~~formed~~ found.

Experimental procedures used in forming and testing the organic film sandwiches are outlined.

3. PUBLICATIONS, REPORTS, TALKS, CONFERENCES

The following papers and reports were written during the contract period:

"Electrical Conduction through Langmuir Films" by R. M. Handy and L. C. Scala, Westinghouse Research Report 63-161-454-R1.

"Carrier Transport through Thin Organic Films" by L. C. Scala and R. M. Handy, paper delivered at the Meeting of the Electrochemical Society, Pittsburgh, April 1963.

Three Quarterly Progress Reports were issued on 31 January, 30 April and 31 July 1963.

Conferences were held at Westinghouse Research Laboratories on December 18, 1962 and March 14, July 12 and September 13, 1963, to discuss various technical and administrative aspects of the contract. Those present at the first meeting were: Dr. H. Mette, USAELRDL, Drs. T. P. Brody, R. M. Handy, J. E. Johnson, L. C. Scala and P. M. Waters of Westinghouse Research Laboratories. Subsequent meetings were attended by Dr. S. Epstein of USAELDRL and Drs. I. M. Mackintosh, S. J. Angello, T. P. Brody, R. M. Handy, L. C. Scala and P. M. Waters of Westinghouse Research Laboratories.

4. FACTUAL DATA

4.1 Introduction

The objective of the research under this contract was the investigation of electrical conduction phenomena in sandwich structures consisting of two conductors separated by an ultra-thin organic layer. Primary interest was to be concentrated in that range of organic film thickness where hot electron conduction phenomena are significant, (i.e. 10 - 100 Å).

While originally it was our intention to explore alternative methods or organic film formation, such as the technique of interfacial polycondensation and ultraviolet irradiation induced crosslinking of evaporated monomers, it became increasingly evident that in order to obtain some definitive results, the range of investigation should be restricted and emphasis placed on achieving reproducible conditions. Accordingly, we have concentrated our efforts on the Langmuir monolayer technique, and correspondingly reduced the time invested in the other approaches. The substance of our discussion will be concerned with the results obtained with Langmuir films and their interpretation; work on other techniques and materials is summarized in Section 4.4.

The Langmuir process consists typically of spreading a monolayer of fatty acid molecules onto a water surface, compressing the monolayer into a compact floating film, and transferring it to a solid substrate by passing the substrate through the water surface. By dissolving salts in the water, the fatty acid may be all or partially converted into a more rigid and insoluble soap film. An apparatus was built to manufacture these films under controlled conditions, and several types of materials were investigated.

A detailed description of the equipment and a full review of the literature on the process have been given in the quarterly reports. The Appendix (Section 7) contains a brief description of the experimental techniques used.

The primary requirement of the Langmuir process is that the organic component must spread out on the water surface into a homogeneous film which can be compressed laterally to eliminate voids between the molecules before the film collapses. The fatty acids posses this property of a distinct and well defined collapse pressure, and give films in which the molecules stand perpendicular to the surface so that the film thickness is fixed by the molecule length. Stearic acid and its soaps of calcium or barium stearate have been most extensively studied in the literature, and hence were the principal materials used in this investigation. The molecule length is ~ 25 Å, and multilayer films can be built up in increments of this value by repeated passage of the sample through the floating monolayer. The first part of this report describes the results of experiments on stearate films.

Some polymeric materials can also be spread out on water surfaces into layers approximately one molecule thick. In these cases however, the molecules are so long that they lie approximately parallel to the water surface, so that the monolayer thickness is not so well defined. Moreover, when the monolayer is compressed, the molecules tend to slide over one another so that the film thickness changes continuously without the occurrence of a distinct collapse point. There is, however, at least one exception to this general behavior. Polyvinyl benzoate is a long chain linear polymer which exhibits a distinct collapse point indicating that the film thickness remains constant as the layer is compacted until all voids have been closed.

It provides a material of film forming properties similar to the stearates, but of vastly different molecular arrangement, and hence is an interesting material for investigation. The experiments on PVB reported in the second section are not so extensive as those on the stearates, but are sufficient to yield conclusions about the arrangement of the long chain molecules on the substrate, and to give an estimate of the incremental monolayer thickness.

4.2 Properties of Stearate Layers

4.2.1 General Considerations

During the final quarter of the contract effort, investigation of the barium stearate layers continued in order to obtain additional data on the structure thickness, uniformity, and current-voltage characteristics of the films. Many of the samples produced were used for non-electrical tests which are discussed in the subsequent sections of the report. Electrical measurements on the remaining samples generally confirmed or extended the previous results without revealing any new unusual behavior, so they will not be treated separately. The discussion which follows is based upon all the available data and is intended to provide a comprehensive review of the observed properties of the stearate monolayers. Some repetition of material contained in earlier reports is obviously required. In some cases, however, the interpretation of results is different. Unless specifically noted this part of the discussion refers entirely to barium or calcium stearate films.

Prior to the inception of this contract, Miles and McMahon[1] reported the use of organic monolayers (stearates) as a thin insulating barrier for electron tunneling experiments. Evaporated films of lead and tin were used for the electrodes because of their desirable superconductive properties. Their procedures were subsequently duplicated in our own Laboratories. In preparing such a device one of the metal electrodes must necessarily be exposed to the atmosphere before the organic monolayer is applied. Unfortunately, on exposure to air both lead and tin grow an

oxide, at least as thick as the organic monolayer, so that a serious question existed as to the true origin of the insulating behavior. Without additional evidence, it could equally well be ascribed to the ever-present oxide. As a result, the first efforts under the contract were directed toward resolving this issue.

The experimental structure consists of a glass slide on which a number of parallel stripes of one or more metals have been evaporated. The organic film is then applied and finally the second electrode stripe is evaporated over the top at right angles to the first set. Each sample provided from 6 to 9 metal-organic-metal junctions approximately 1 mm square. A detailed description of the substrate preparation techniques and test methods is given in the Appendix.

A large number of samples were prepared using noble metals (e.g., Ag and Au) as the first electrode in order to minimize or avoid the presence of an oxide layer. On may of these samples, half of the first electrode stripes were tin for control purposes. From one to ten layers of calcium or barium stearate were transferred to these samples using the techniques described elsewhere in this report. On each passage through the surface of the bath the area of the floating monolayer was observed to decrease, providing direct evidence of the transfer of the monolayer to the surface of the slide. In every case, however, electrical tests of the finished samples showed a junction resistance for the noble metal based junctions of less than one ohm. By contrast, the tin-based junctions yielded significant numbers of insulating devices showing non-linear current voltage characteristics. It was not possible to obtain any insulating behavior

on an oxide-free electrode even when adjacent thin film tin electrode structures gave uniform stable insulating layers.

Two explanations were possible: either the insulating behavior was derived only from the oxide, or the oxide was essential for adhesion of the organic monolayer. No direct means was found for distinguishing between these possibilities. The issue was finally resolved in favor of the second alternative by the weight of accumulated data from the tin-based layers, and the published information on radio-tracer studies of C^{14} tagged monolayers. In particular, radio tracer studies[2,3] of tagged monolayers have shown that reactive (i.e., oxidizable) surfaces provide significantly greater adhesion for the organic molecules than do noble surfaces. Any free stearic acid remaining in the film will tend to migrate and/or evaporate from a noble metal surface.

Having recognized that a reactive and hence oxidizable metal is essential for uniform and stable adhesion of a monolayer, the fundamental question still remained as to what part the ever-present oxide played in the electrical properties of the sandwich. If the oxide was highly conductive as would be expected from published data on "bulk" tin oxide, then any insulating behavior in the samples could be reasonably ascribed to the organic layers. If the oxide was not highly conductive then the situation with regard to electrical properties, particularly the non-linear conduction phonomena, would be extremely complicated. A detailed discussion of these possibilities was presented in the Second Quarterly Report. The question however is of such importance to the interpretation of the data as to merit a repetition of the arguments employed.

The experimental data presented in the subsequent sections show that transfer of an incomplete monolayer is a frequent occurrence. That is, some of the stearate monolayers contain holes. The principal argument to be dealt with therefore, is that the organic film serves as a mask which covers all but a very small fraction of the sample area, and that conduction takes place via the exposed oxide regions in direct contact with the second (top) electrode. Let us assume this to be the case, and calculate the void fraction in the first monolayer and the maximum resistivity of the oxide.

The stearate films are necessarily transferred at a pressure less than the collapse pressure and hence the film is not entirely compact, but will contain open areas separated by comparatively large void free regions of film. From the actual transfer pressure, one can expect the void area to be less than 1-2% of the total area. If the oxide is insulating, then one should be able to duplicate the electrical behavior of the organic coated samples by using an uncoated sample of sufficiently small area. To test this concept, the junction area was reduced from 1 mm^2 to 0.02 mm^2 (i.e., 2% of the usual value) and the junction resistance of coated and uncoated samples compared. Without exception the uncoated samples gave resistivities of $\leq 10^{-4}$ to $10^{-5}\,\Omega$-cm^2, even when treated by a one hour exposure to an oxygen glow discharge to promote heavy oxide growth. By comparison, 1 mm^2 samples coated with a single monolayer gave low voltage resistivities as high as 10^3 ohm-cm^2. In the latter case, therefore, the void area would have to be less than 10^{-10} cm^2, or less than 10^{-6}% of the total area of a 1 mm^2 sample. If the voids are uniformly distributed, then a "multi-monolayer" sample would have 10^{-14}% voids through two layers, 10^{-22}%

voids through three layers, and so forth. Under these conditions therefore, the prospect of significant void area extending through more than two monolayers is negligible.

For the moment, let us continue to assume that conduction through a single monolayer takes place only via the exposed "insulating" oxide and calculate the current density flowing through the voids. At room temperature currents of the order of 10^{-4} to 10^{-3} amps can be drawn continuously without failure, which for a void area of 10^{-10} cm^2 gives a current density of 10^6 to 10^7 amps/cm^2, far beyond the current carrying capacity of the thin metallic filaments penetrating through the voids from the top electrode.

As a further test of the character of the oxide films present on the electrodes, uncoated "control" samples of small area (0.02 mm^2) were cooled to liquid nitrogen temperature. The resistivity obtained by four terminal measurements increased from 10^{-5} ohm-cm^2 to 10^{-4} ohm-cm^2 in going from 300^oK to 77^oK (by comparison, the sheet resistance of the tin oxide coated glass (NESA) sample increased by 4% over the same temperature range). If one neglects changes in mobility, then the order of magnitude increase in resistivity would be appropriate to a semiconductor with shallow donors lying $\sim$0.038 ev below the conduction band edge, or equivalently, an insulating barrier $\sim$0.019 ev high. Using the observed resistance of the small area "control" samples one can also calculate the maximum equivalent bulk resistivity of the oxide layers, as

$$\rho = \frac{RA}{t} = \frac{(10^{-1})(2 \times 10^{-4})}{2 \times 10^{-7}} = 10^2 \Omega\text{-cm}$$

where a value of 20 Å was used for the oxide thickness. The resistivity may be considerably less than this since the minimum error in the junction resistance measurement is of the same order as the measured value of $\sim 10^{-1}$ ohm. The equivalent bulk resistivity obtained from sprayed coatings of SnO_2 on glass is typically much lower, generally of the order of 10^{-2} Ω-cm.[4]

From the foregoing discussion it is apparent that the oxide cannot be neglected apriori in interpreting electrical measurements on organic monolayer devices. Its specific contribution to the measurable electrical properties, however, can be determined within useful limits because the oxide is of the order of 10^{10} times as conductive as the organic material, and any exposed oxide area is an extremely small fraction of the total junction area. The following section describes capacity, current-voltage, and temperature dependence measurements on the stearate coated samples. The part played by the oxide will vary in each case.

The capacity measurements will be controlled by the organic layers with negligible contribution from the oxide. This follows from the fact that the sample resistivity must be at least of the order of $10\ \Omega\text{-cm}^2$ before a capacity measurement is possible, which in turn, requires that the net oxide area exposed be less than 10^{-5}% of the junction area. Calculation of the capacity of a composite insulating oxide-organic multilayer structure shows that the void fraction must exceed 5% of the total area before a measurable deviation occurs from the no-void value.

The low voltage resistivity of the samples will be profoundly affected by any exposed oxide areas in contact with the top electrode, and this parameter provides the most sensitive measure of the degree of coverage obtained.

Beyond the region near zero volts, the non-linear current-voltage characteristics of the samples will be controlled by the organic film properties. This follows from the fact that the current carrying capacity of any metallic filaments penetrating through to the oxide is inadequate to account for the magnitude of the observed currents which can be sustained by the samples.

The temperature dependence of the electrical properties will be determined by the relative magnitude of current flowing through the organic layers compared with that flowing through any exposed oxide areas at the measuring voltage. The larger the measuring voltage and the number of monolayers applied, the more closely the characteristics will reflect the temperature dependence of the organic films alone.

With the exception of the low voltage resistivity, the data presented in the subsequent sections reflects the properties of the organic films.

4.2.2 Observed versus Predicted Thickness

The previous work of Langmuir, Blodgett, Ries, and others using many layer films has established that an average stearate (Ba or Ca) monolayer is $\sim$25 Å thick and has an index of refraction of 1.49 (for normal incidence). During the present research, interest has been concentrated on much thinner films in the range of 1 to 10 layers where optical measurements are awkward; therefore, capacity measurements have been used to determine the thickness and evaluate the success of the transfer operation. Fig. 1 presents a plot of the average electrical thickness, given in terms of the reciprocal capacity (1/C) versus the number of layers predicted from

the transfer procedure N_p. In determining the predicted number it was assumed that each passage of the slide through the bath surface yielded a monolayer. On Fig. 1, many of the clusters represent points which would fall on top of each other, and therefore in order to show the density distribution of the data they have been slightly mis-plotted. Two dotted lines have been drawn on Fig. 1 to represent the mean upper limit and the mean lower limit respectively. It can be seen that all the points fall essentially on or within these boundary lines. The two boundary lines differ in slope by approximately a factor of two. The heavy dashed line on Fig. 1 represents the overall mean value.

The interpretation of these results revolves principally around three initially unknown factors: (A) the low frequency (1 Kc) dielectric constant ϵ_r, (B) the fraction of the active area covered by each monolayer (i.e., the monolayer density) and (C) the number of monolayers actually transferred to the active area of the slide. The factors (A) and (B) are related by the Clausius-Mosotti equation:

$$\frac{\epsilon - 1}{\epsilon + 2} = \text{(Constant)} \times \text{(Density)}.$$

The effective thickness for electrical purposes will depend upon both (B) and (C) since it can be assumed that the evaporated upper electrode will contour the upper surface of the organic film. The measured capacity and hence the calculated thickness value will depend upon (A);(B), and (C) in combination.

The most striking feature of the plot in Fig. 1 is the existence of the boundary lines and their approximate relation. Why should the

number of transfer strokes required to produce a given electrical thickness $N_o \alpha (1/C)$ vary over the range $N_p/2 < N_o < N_p$? A simple variation of ϵ or of the density of the films would be unlikely to produce this result. Folding or inadvertent collapse of the monolayer during transfer is also an unlikely explanation since this is readily detected by the film balance. The most tenable explanation follows from the observations by Blodgett[5] that under certain experimental conditions the number of transfer strokes (n) required to achieve a given optical thickness N could be made to range from n = N to n = 2N. Blodgett asserts that this variation is associated with incomplete transfer of the monolayer during the up-stroke of the dipping sequence. By adjusting the chemical conditions, dipping rate, temperature, and sample immersion time, the interference colors obtained could be made to vary continuously, implying continuous variation in fractional monolayer take up. If possible variations in ϵ are neglected, the data of Fig. 1 fit these observations exactly. The upper limit line would correspond to those cases in which a full monolayer was deposited on every transfer stroke, and the lower limit line would correspond to those cases in which a full monolayer was deposited only on every 2nd transfer stroke. The scatter within the limit lines then corresponds to the intermediate situation in which partical coverage is obtained on the up stroke and full coverage on the down stroke.

Assuming this model to be correct, then the slope of the upper limit line (i.e., where $N_o = N_p$) and the known monolayer thickness of ~25 Å

can be used to determine the corresponding dielectric constant at 1 Kc as $\epsilon_r \simeq 2.1$. This value is approximately equal to the square of the optical index of refraction n = 1.49 of compact monolayers perpendicular to their surface. If the monolayers are not compact but have a skeletal structure (corresponding to removal of some of the unreacted stearic acid for example) values as low as n = 1.22 have been reported[6]. The calculated value of $\epsilon_r = 2.1$ is lower than might be expected at 1 Kc, since ϵ_r generally increases as the frequency of observation decreases, but it is not inconsistent with the known variation in dielectric properties with film structure. The supposition of partial monolayer transfer on half of the dipping strokes in fact suggest a skeletal structure consistent with a lower value of ϵ_r.

If the capacity is measured as a function of frequency, a slight change in ϵ_r with frequency is observed as shown in Fig. 2. The upper curve plots C (and therefore ϵ_r) versus log f. Over the range from 100 cps to 20 Kc the dielectric constant drops by 5%. The lower curves shows the variation with frequency of the imaginary part of the complex dielectric constant $\epsilon'' \propto C \times D$. It should be noted that a shallow maximum occurs in ϵ'' near 700 cps, revealing the presence of a weak polar absorption mechanism with a characteristic relaxation time $\tau_m = 1/2\pi f_m =$ 0.23 msec. At higher frequencies (i.e., $f > 2$ Kc) the measurement uncertainty in the dissipation factor D becomes comparable with the observed values.

4.2.3 Low Voltage Resistivity Versus Thickness

In the Third Quarterly Report, a plot was presented of the approximate low voltage resistivity versus the number of monolayers of barium stearate transferred to the sample. The plot was constructed by weighting the available points according to the sample uniformity. A much larger number of samples for which both capacity and resistivity values have been obtained is now available and it is apparent that the weighting procedure was somewhat arbitrary. If the observed resistivity is plotted as a function of the observed number of layers,* as in Fig. 3, it is found that the points are approximately uniformly distributed within the shaded interval. The boundary lines denote the limits of the observed values. The average slope is the same as was previously reported, but the limits of variation are considerably wider.

The points which define the upper limit of resistivity for a given N_o are generally those corresponding to the points on the upper limit line of Fig. 1, that is, the thickest layers obtained for a given number of transfer strokes. In the discussion of Fig. 1, it was postulated that these points corresponded to the full layer thickness, which implies that the upper limit line of Fig. 3 should also correspond most closely of all the points to the full layer resistivity. The significant change of slope in the upper limit line occurs at a resistance equivalent

---

*As determined from capacity measurements for $\epsilon_r = 2.1$ and $\Delta t/\Delta N = 25$ Å.

to a bulk resistivity of $\sim 2 \times 10^{12}$ ohm-cm, which is comparable with the value for many bulk insulators. It should also be noted that further increase in layer thickness beyond $N_o = 2$ does not yield any significant increase in equivalent bulk resistivity. For example, a sample having several junctions for which $N_p = N_o = 10$, gives an equivalent bulk resistivity of $\sim 3 \times 10^{12}$ ohm-cm. This type of behavior suggests that beyond approximately two to three layers, conduction through the organic films (at room temperature) is being dominated by a thermionically activated process rather than a field emission process. As will be subsequently seen, measurements of the temperature variation of the current-voltage characteristics show this to be the case.

The wide range of low voltage resistivity values observed for the same measured thickness clearly suggests that the organic films are porous. It seems probable that for small N_o, the majority of the low-voltage resistivity values are characteristic of the oxide, and reflect the degree of coverage obtained, i.e. the fractional area of the oxide in direct contact with the top electrode. The upper limit line corresponds to those layers possessing the smallest fraction of voids. In the general discussion of Section 4.1.1 it was calculated that the void fraction per monolayer of the highest resistivity samples must be of the order of 10^{-6}% of the total area. Because of the known bridging properties of the monolayers, two such compact layers would give a void fraction of $\sim 10^{-14}$% which amounts to total coverage of the surface. It is interesting to note in Fig. 3 that the upper limit line of low-voltage resistivity versus thickness undergoes a change of slope at $N_o \simeq 2$, which presumably corresponds to the onset of complete

coverage. Most of the samples, however, are not so compact, and more than two layers are required in order to achieve total coverage of the surface. The lower limit line undergoes a change in slope at $N_o \simeq 7$ and corresponds to an average void fraction per monolayer of 1 to 2%, which is the maximum expected value predicted from the transfer conditions.

4.2.4 Current-Voltage Characteristics and Temperature Dependence

Typical current-voltage characteristics of the metal-organic-metal sandwiches are shown in Fig. 4. Near zero voltage the characteristic is linear and presumably controlled by the voids present in the organic films. As the voltage increases beyond $\sim$ 0.1 to 0.2 volts the current rises very rapidly with increasing voltage, and because of the current densities required it must be flowing principally through the organic film. The voltage required for significant departure from linear conduction increased slightly with increasing layer thickness as would be expected, but in general was significantly less than the values typically observed for inorganic insulating films (e.g., Al_2O_3) of comparable thickness. Fig. 5 shows a semi-log plot of the current-voltage characteristics of a thin ($N_o \sim 0.75$) and a thick ($N_o \sim 5.5$) sample plotted on the same scale. The absolute current levels differ by about four orders of magnitude as would be expected from Fig. 3. The slope of the characteristics also differ slightly, the thicker film showing a more rapid increase in current than the thinner film.

As would be expected, the thicker films are also more temperature sensitive. Fig. 6 shows the variation of current with temperature at constant voltage for a $\sim$3 layer film and a $\sim$5 layer film. The initial slope at high temperatures is approximately the same in both cases.

indicating that the thermal activation energy for conduction is also comparable. At different low temperatures, however, the slopes are quite different, illustrating the different relative contribution of tunneling and thermionic currents through the sandwiches in the two cases. The behavior of the ~ 3 layer sandwich has been analyzed in detail as shown in Fig. 7. By subtracting the extrapolated zero temperature current value I', the thermionic contribution to the current (I-I') represented by the heavy dashed line of Fig. 7 is obtained. Using a Schottky plot of log $\left\{(I-I')/T^2\right\}$ vs 1/T as shown in Fig. 8, the thermal activation energy ϕ_B can be determined as $\phi_B \simeq 0.25$ ev.

The details of these calculations have been given in the quarterly reports. The close correspondence of the initial (room temperature) slopes of all of the samples examined shows that the activation energy is not critically dependent on the thickness, and that a value of $\phi_B \simeq 0.25$ ev reasonably describes the properties of the organic film in contact with Sn electrodes.

4.2.5 Autoradiographs of Stearate Layers

Little difficulty was usually experienced in depositing and transferring barium stearate monolayers onto solid substrate if the precautions mentioned in the Appendix were followed closely. A very vivid demonstration of the effectiveness of transfer is provided by several auto-radiographs obtained from mono- and multi-layers consisting of C^{14} tagged barium stearate[7]. The stearic acid employed was supplied by

Nuclear Chicago Corporation in benzene solution, with a total activity of 10 mc, or 12.3 mc/millimole; it was diluted prior to use to the same concentration as that of regular stearic acid used in this work, and was spread and transferred under similar conditions, but at slightly lower pressures. Auto-radiographs were taken by laying a piece of Medical No Screen X-Ray film on the glass slides covered by the radioactive layers, covering the film with a second glass slide and clamping the slide-organic layer-X-ray film-slide sandwich tightly together. Generally the exposures obtained after 2 days at $\sim 5^{\circ}C$ were too dense, so that the auto-radiographs described here were obtained after one day's exposure. Several of the auto-radiographed samples are shown in Fig. 9. The pressure at which all the radioactive layers were transferred onto the glass slide was about 30 dynes/cm, corresponding to a layer compaction of more than 95% of that existing just before the collapse pressure of 42 dynes/cm.

The exposures presented in Fig. 9 shows, from top to bottom:

a. One Ba stearate monolayer covering the whole slide, including the narrow (horizontal) tin electrode strip. The darker region (top center) is a film blemish introduced during developing.

b. One Ba stearate monolayer over a series of vertical, alternating copper and tin stripes; the monolayer was transferred with the slide partially out of the aqueous subphase and therefore covers only a portion of the slide.

c. Several stearate layers over a single (horizontal) tin stripe deposited in 1, 3 and 5 monolayer steps; the first layer covering the whole slide, the second and third layers 2/3 of the slide, the fourth and and fifth about 1/3 of the slide.

d. Several layers of Ba stearate: PVB mixture over vertical, alternating copper and tin stripes, deposited in 1, 3 and 5 monolayer steps covering successively smaller fractions of the slide as in (c) above.

The first general conclusion that can be drawn from all the exposures shown in Fig. 9 is that, apart from a few spots mainly caused by dust particles deposited on the film or the stearate layers after transfer, or by imperfectly developed emulsions, the layers are very uniform, covering the slide and the metal stripes satisfactorily. It must be remembered, however, that the voids or double layers in the monolayers can be detected only to a resolution of 10 to 25μ depending upon the film density,* so that autoradiography permits the detection of only gross monolayer defects, or a serious lack of adhesion between monolayer and the solid substrates.

It will be noticed that the metallic stripes evaporated on the glass slide and covered by the radioactive organic thin layers can be easily seen; this is due to the difference between the backscattering coefficient of the glass and that of the various metals.

The contrast between the portion of the slide covered by a monolayer and the uncoated region next to it is quite striking. This effect is shown in particular by the region on the top edge of three of the slides where the clamp holding the slide during layer transfer left an uncoated, regularly shaped imprint. This imprint is missing from the

---

*The resolution limit of these films was directly determined from the edge step definition using a special instrument developed by Dr. A. Bennett of these Laboratories for use in evaluating optical scanning systems.

second (from top) radiograph because the slide was only partially immersed. The peculiar wave pattern described by the monolayer on this slide (b) indicates that the wetting angle between the surface of the aqueous subphase supporting the monolayer and the solid substrate varies according to the nature of the solid substrate surface. This effect is particularly noticeable in this case by comparing the wetting on the bare glass versus the metals, and between the copper and Sn stripes themselves. It is known that the wetting angles obtained have great bearing upon the adhesion of organic monolayers to solids.

The two lower exposures show monolayer deposition in 1, 3 and 5 layer steps. Measurement of the optical density of each step indicated that the density increased regularly and in direct proportion to the number of layers deposited.

The bottom exposure presents a particularly interesting case. It will be noticed that the edge defining the second step (3 layers) is wavy, similar to the monolayer on slide b, but that the wave amplitude is smaller. Again the relative wetting angle between the organic monolayer and copper is different from that between the organic layer and tin. Finally, the edge defining the third step (5 layers) shows a very small but still perceptible difference in wetting angle between the metal stripes and the glass. The gradual shading in density adjacent to the steps is an artifact of the reproduction process and is not present on the original negatives.

The variation in wetting angle (and consequently adhesion) between a glass, copper, and tin surface would be expected because of the

different chemical nature of each surface. The first monolayer understandably should reflect these differences as is shown by the radiograph b. Once the first monolayer has been applied however, the substrate surface is covered by a sheet of molecules 25 Å thick so that subsequent layers deposit on an organic base and are removed further and further from the substrate in 25 Å steps. It is inconceivable that the binding forces responsible for the adhesion of the first layer could extend so far from the surface as to directly influence the adhesion of the second layer, much less the third and subsequent layers. Chemical binding forces have an effective range of no more than a few angstroms. The continued observation of differences in relative wetting angle over Cu, Sn, and glass surfaces with successive monolayers must therefore reflect the differences in structure of the organic layer which is formed on each of the three surfaces.

Two possible explanations of this behavior arise. The first requires the assumption that each of the monolayers contain a significant fraction of holes, and that succeeding monolayers can be in direct contact with the substrate. The differences in wetting angle over the several regions of the slide (glass, Cu, Sn) would be progressively attenuated, as the net fraction of exposed area decreased with each layer. This would coincide with the observed behavior and is in qualitative agreement with the conclusions reached from the electrical measurements. Further inspection of the radiographs places several conditions on this hypothesis; (a) the maximum hole size must be less than 25μ, (b) the distribution of holes must be fairly uniform, and (c) the percentage of holes must be approximately the same from layer to layer.

For this hypothesis to be tenable one must decide by what means this porous structure arises, and to what extent the film is porous. The beautiful electron micrographs of Ries et al[8] show that monolayers of stearic acid and other vertically oriented film formers will contain voids unless compressed to just below the collapse pressure. For example, a stearic acid monolayer transferred at 10 dynes/cm (24% of collapse pressure) shows many circular islands 0.3 to 5.0 microns in diameter in contact at their edges and with irregularly shaped connected micron size voids in between. At 25 dynes/cm a continuous monolayer with disconnected open areas is obtained, and at 40 dynes/cm a continuous homogeneous monolayer is obtained. The barium stearate films used for the auto-radiographs were transferred at 30 dynes/cm, which from the P/A curves would correspond to at least 95% compaction. That is, the total open area per monolayer cannot exceed 5% of the geometrical area. Taking this figure as a worst case limit, then the second layer could contact the substrate over a 5% of its area. The third layer would then make contact over 0.25% of its area, the fourth over 0.0125% of its area, and the fifth over 0.000625% of its area. It is questionable whether these very small fractions of the total film area alone would be sufficient to influence the relative wetting angle over the several regions of the slide (glass, Cu, Sn) to the extent visible on the films for the 3 layer and 5 layer steps. Some additional or alternate mechanisms seem likely.

An alternate though not necessarily exclusive mechanism for the large distance influence of the substrate surface conditions on wetting angle as shown in the radiographs is derived from the work of Germer et al[9]

on the arrangement of the organic molecules on the substrate surface. Notably, this second hypothesis does not require the presence of microscopic holes in the monolayer films, nor direct contact between the substrate and successive monolayers. As was pointed out earlier, the binding forces between the substrate and the first monolayer cannot directly influence the adhesion of a second, third, etc. layers 25 or more Angstrom units distant. They may do so indirectly however, by controlling the molecular arrangement of the first monolayer. In their paper Germer et al describe electron diffraction studies of barium stearate and stearic acid films prepared on several metallic and non-metallic substrates.

They find that on a metallic surface the molecules are standing approximately perpendicular to the substrate surface ($\pm 5^{o}$) and that azimuthal orientation of the first layer is random. With succeeding layers (3,5,....,) the azimuthal orientation becomes progressively more ordered. Films deposited on non-metallic surfaces (polystyrene resin) however show a high degree of hexagonal symmetry even in a single layer. In general, the higher the percentage conversion of the free stearic acid to barium stearate, the more amorphous the overall structure. It is obvious that the chemical nature of the substrate surface affects the degree of order obtained in the first layer and therefore in succeeding layers. In any case a progressive increase in molecular order is observed in successive layers.

The radiographic samples present several different surfaces (glass, Cu, Sn) to the monolayer on different regions of the slide. The

work of Germer et al. described above suggests that the molecular order in the first monolayer will vary from region to region according to the surface (glass, Cu, Sn) just as the differences in wetting angle reflect differences in binding energy. The second monolayer, even though it may not be in direct contact with the substrate surface can be influenced by it through the local variations in the ordering (and perhaps density) of the first monolayer. With each succeeding monolayer the order increases and the effect of local variations in the order of the first monolayer will be progressively attenuated.

As before, this hypothesis leads to the observed behavior on the radiographic slides, but without the necessity of requiring large voids in the films. Again, however, the question must be raised as to whether the local variations in initial molecular order are sufficient to produce the variations in wetting angle or successive layers. On the basis of the present data, it is not possible to make a distinct choice as to the more influential mechanism.

4.3 Properties of Polyvinyl Benzoate Layers

4.3.1 General Considerations

A number of samples have been produced by Langmuir film transfer of the linear polymer, polyvinyl benzoate (abbr. PVB). The structure of a molecule of this material is shown schematically in the following diagram:

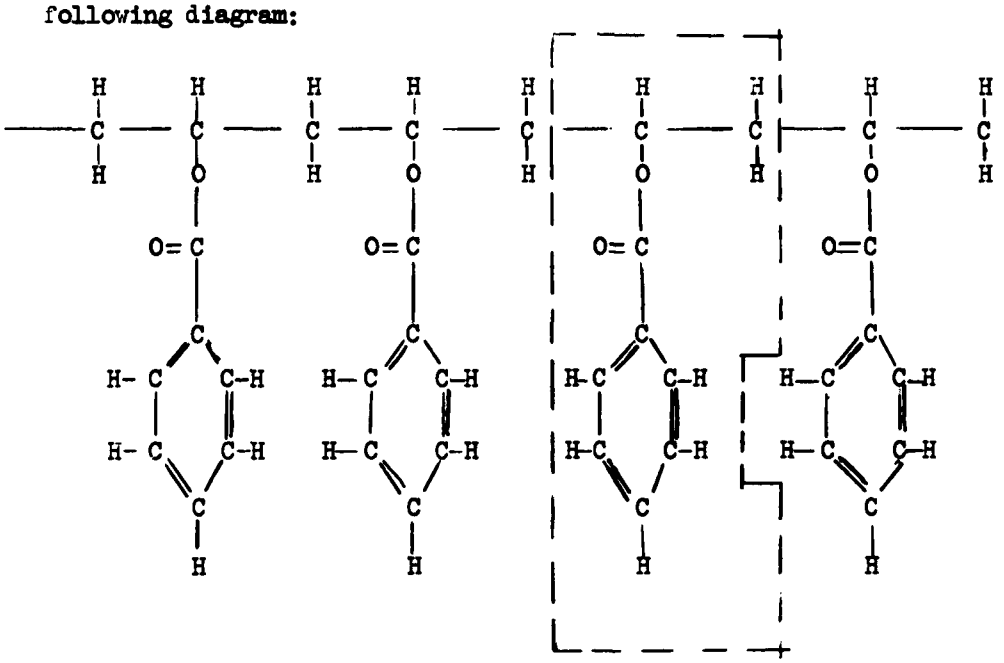

Each molecule will consist ideally of hundreds to thousands, depending on the molecular weight, of basic monomer units (shown within the dotted lines) joined in a continuous line. From the work of Ries et al[10] it is known that monolayers of PVB show strong film properties similar to those of the vertically oriented fatty acids and unlike those of other linear polymers such as polyvinyl acetate which are horizontally oriented with the molecules parallel to the substrate. In fact, the P/A isotherm of PVB follows the pattern of stearic acid P/A isotherm, that is, a region

in which the compressibility is relatively high is followed by a region where a very slight decrease in area gives a very great increase in pressure. The collapse pressure reported for the PVB films by the same authors is very high (53 dynes/cm) indicating that a very rigid stable film is obtained. In addition, experiments conducted during the third quarter on bulk samples of PVB indicate that sufficient cross-linking between molecular chains can be produced by irradiation from a Cs^{137} source to render the material insoluble to benzene, implying improved physical and mechanical properties.

The property that compressed PVB films possess of being able to spread out in continuous very thin layers of remarkable tenacity and cohesion makes PVB an interesting material for insulating purposes; on the other hand, this same property increases the difficulty of film transfer onto solid substrates.

To overcome this difficulty, transfer was made at a pressure much lower than the collapse pressure. If we consider that at a collapse pressure of 50-52 dynes/cm the polymeric chains are 100% compressed, the typical P/A curve for PVB will show that at a pressure of 10 dynes/cm the polymeric chains are about 85% compressed. If transfer is made at pressures ranging between 10 and 20 dynes/cm one naturally loses part of the PVB tight packing advantages; however, the resulting layer is still more highly compressed than any made from other typical horizontally oriented polar polymers, as far as the literature shows to date.

Transfer of PVB layers onto metal coated glass slides was therefore effected at the relatively low pressures mentioned above, with the slide being dipped and retrieved as in typical Langmuir method; however

the results of this method were not completely satisfactory, since the resulting slides exhibited the "half" layer thicknesses discussed in Section 4.3.2.

Other methods of transferring PVB were then tried. In one method the slides were placed with the flat parallel to the water surface but just below it, so that the electroded part to be coated lay just under the PVB layer. On raising the slides, the PVB layer was laid over the solid surface when the latter emerged from the aqueous subphase. This method worked relatively well, but was time-consuming. Another procedure, which gave better results, consisted of pushing the surface to be coated into the PVB layer, so that there would be no water between the PVB layer and the surfaces to be coated. These methods gave slides exhibiting the full layer thickness increments ($\sim$ 37 Å).

A third method was that of covering the slide with a monolayer of barium stearate, followed by several transfer operations with PVB layers, according to the classical Langmuir dip method. It was found, however, that the only measurable coating was the stearate monolayer.

Much better results were obtained when equiweight quantities of PVB and stearic acid were dissolved in benzene and used for monolayer deposition. The mixture had a collapse pressure close to that of stearic acid (40-42 dynes/cm); it could be transferred onto a slide at pressures ranging from 25 to 31 dynes/cm, and behaved as through the stearic acid was controlling the transfer. In one case the stearic acid used in the PVB mixture was radioactive and the autoradiograph taken of this mixture on glass slide (Fig. 9d) shows good layer continuity within the resolution of

the film (10-20μ). Fig. 10 gives the P/A curve for this type of mixture to below its collapse pressure.

4.3.2 Observed Thickness and Film Structure

Because the molecules are not vertically oriented, the monolayer thickness is not given by the molecule length as it was for the stearates, nor is the mode of attachment of the moelcule to the substrate so well defined. By combining capacity data from samples of different thickness with the average area per monomer unit (calculated from the transfer) conditions), and the estimated dimensions of a monomer unit (calculated from the bond lengths), it is possible to construct a crude but reasonably consistent model for the arrangement of the molecular chains on the substrate, and to estimate the incremental thickness per layer.

Consider the simple equation for a parallel plate capacitor one square millimeter in area

$$C = \frac{88.54\epsilon_r}{t} \qquad (1)$$

or

$$\frac{1}{C} = \left(\frac{1}{88.54}\right)\left(\frac{t}{\epsilon_r}\right) \qquad (2)$$

where ϵ_r is the relative dielectric constant, t is the thickness in Angstrom units, and C is the capacity in nanofarads. The value of ϵ_r is not known precisely, but can be presumed to be between two and ten without serious risk of error. Based upon data available for polyvinyl acetate[11] a narrower range of $2 < \epsilon_r < 5$ appears reasonable for PVB at the measuring frequency of 1 Kc and room temperature. It is at least necessary to assume, however, that the dielectric constant is approximately independent of thickness over the range of interest. According to Equation 2, the reciprocal capacity (1/C) is directly proportional to the thickness,

and a plot of (1/C) versus the predicted number of layers should yield a straight line passing close to zero, whose slope corresponds to the incremental thickness per layer. Fig. 11 shows a plot of the observed values of (1/C) as a function of the predicted number of layers (N_p) assuming that each transfer stroke yielded a layer (it should be noted that some of the layers are pure PVB and some are a PVB-stearic acid mixture). Of the twenty-one available data points, eleven fall approximately on a straight line passing through zero and having a slope of $\Delta t/\Delta N \propto \Delta(1/C)/\Delta(N_p) = 0.132 \frac{mm^2}{nF}$/layer. The remaining ten points lie well away from this line, and it is obvious that the number of layers actually transferred (or retained) in these cases was less than the predicted number. The number actually obtained can be determined by horizontally translating these ten points until they intersect the dashed line, and then reading off the corresponding value of N_p (denoted N_p'). Ideally this process should yield only integer values for N_p'. It is seen that the N_p' points correspond to the range of values of $0.4 \leq N_p' \leq 1$. However, if the distribution of points over this interval is determined, as shown by the shaded bars on the abscissa of Fig. 11, it is seen that 50% of these points correspond approximately to $N_p' = 1/2$. This heavy concentration of the extrapolated points near $N_p = 1/2$ suggests the possibility that the incremental or "single" monolayer thickness $\Delta t/\Delta N$ measured as $\Delta(1/C)/\Delta(N_p) = 0.132 \frac{mm^2}{nF}$/layer may in fact be made up of more than one sheet of molecules, which customarily are picked up as a unit, but which can sometimes be separated, the implication being that failure to achieve the predicted number of layers is associated with this

separation phenomenon. In other words, to account for the entire range of (1/C) vs N_p data and particularly for the very thin layers obtained (low(1/C) values), we are led to the hypothesis that a compressed film of PVB may be made up of several stacked interlocking sheets of molecules.

It is possible to test this hypothesis by an independent calculation. Consider the average substrate area occupied by a single monomer unit. For example, we have the following data about the PVB film for one of these samples:

1.6×10^{-4} grams of PVB were spread on the aqueous substrate and compressed without collapse to an area of 499 cm^2, and then transferred. The molecular weight of PVB used is 3×10^5, so using Avogadro's number = 6.06×10^{23} we have

$$\# \text{ molecules} = \frac{(6.06 \times 10^{23})(1.6 \times 10^{-4})}{3 \times 10^5} = 3.23 \times 10^{14}$$

which gives the average area per molecule of

$$\frac{499 \times 10^{16}}{3.23 \times 10^{14}} = 1.55 \times 10^4 \ (\mathring{A})^2.$$

The number of monomer units per molecule is given by

$$\frac{\text{molecular weight}}{\text{monomer unit weight}} = \frac{3 \times 10^5}{148} = 2.025 \times 10^3 \text{ monomer units/molecule}$$

so that the average area per monomer unit is

$$\frac{1.55 \times 10^4}{2.25 \times 10^3} = 7.65 \ (\mathring{A})^2$$

If we now consider the detailed structure of a single monomer unit as shown in the sketch on the next page (as if viewing the polymer chain end-on),

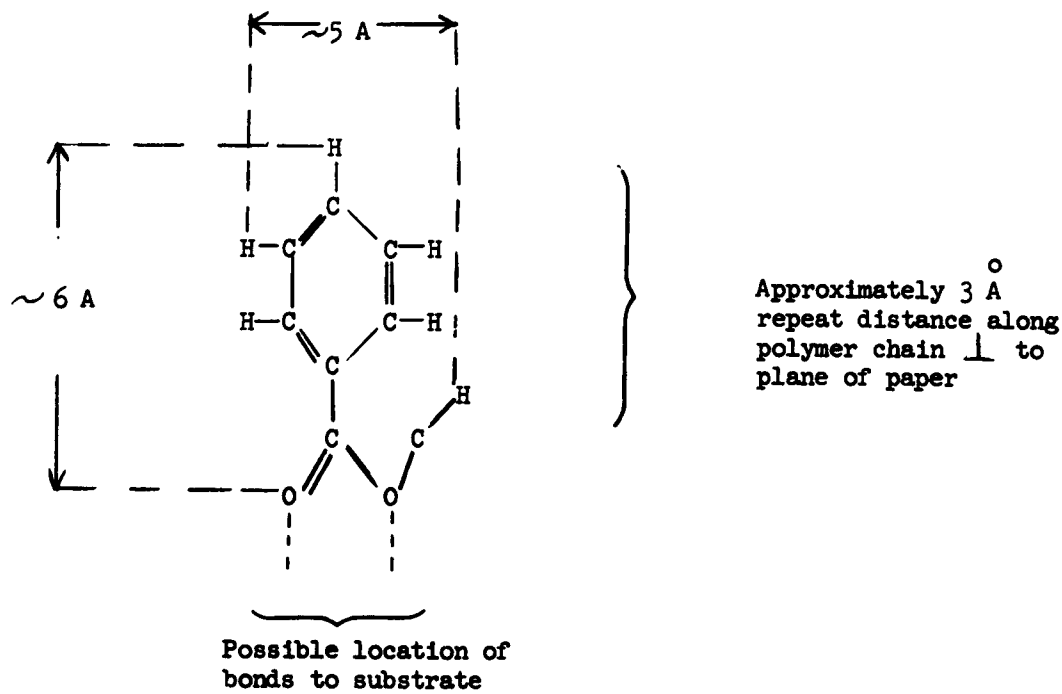

then, by combining known bond lengths and bond angles it is possible to estimate the dimensions of the monomer unit as shown. Assuming no interleaving of the chains we would then require an area per monomer unit of approximately 15 to 20 $(\mathring{A})^2$ or about 2 to 3 times the average observed value of ~ 8 $(\mathring{A})^2$ per monomer unit. From this we conclude that, on the average, there are 2 or more monomer units interleaved and/or stacked above each other in the compressed PVB film. These calculations therefore provide evidence for the initial hypothesis that a compressed PVB film is composed of several stacked and/or interlocking sheets of molecules.

There is another point of comparison which should be considered. Assuming each polymer chain to be lying approximately parallel to the plane of the surface, then a calculation based on the bond distances and angles of a monomer unit limits the predicted thickness for a single sheet of molecules to the range of 8-10 Å. For a relative dielectric constant of 3, then approximately four such sheets would be required per incremental or "single" monolayer thickness to give the observed value of $\Delta(1/C)/\Delta(N_p) = 0.132$. As ϵ_r increases, the number of 8-10 Å thick layers required also increases. This is roughly one more layer than was required to reconcile the observed and calculated area per monomer unit. The area calculation, however, will not be very sensitive to the bond angles within the monomer unit, while the converse will be true for the layer thickness calculation. Considering the estimates required for the various parts of the calculation, this order of agreement is all that could be expected.

The structure of the PVB layers can be investigated further by examining the variation in complex dielectric constant as a function of frequency. This can be obtained from the bridge measurements of capacity C and dissipation factor D in the following manner. The complex dielectric constant ϵ^* is defined as

$$\epsilon^* = \epsilon_o (\epsilon' - j\epsilon''), \text{ where}$$

$$\epsilon' = C \left(\frac{t}{\epsilon_o A}\right), \text{ and}$$

$$\epsilon'' = D\,\epsilon' = CD \left(\frac{t}{\epsilon_o A}\right)$$

where ϵ_o is the dielectric constant of free space, t is the thickness, and A the area of the sample. For any given set of measurements, t, ϵ_o, and A are constant so that the variation with frequency of ϵ' and ϵ'' may be obtained by plotting C vs f and CD vs f respectively. Fig. 12 shows such a plot for a PVB sample at room temperature over the range from 100 cps to 20 Kc. Both ϵ' and ϵ'' decrease with increasing frequency. This type of behavior is typical of polymeric materials with dipoles undergoing hindered rotations in the field[12], and for this set of data it corresponds to the region where the effective dipole relaxation time is longer than the period of the test frequency. As the frequency is increased to infinity, the C value should tend to a value determined by the optical dielectric constant, and the CD value should tend to zero since CD $\propto \epsilon'' \propto 1/f$. The limiting value of C_∞ can be estimated by extrapolation of a plot of CD vs C as is shown in Fig. 13. Since the optical dielectric constant of PVB can be reasonably estimated to be ~ 2.1, the C value can now be used to give an estimate of the incremental layer thickness, as

$$t = \frac{88.54}{C_\infty}\epsilon_\infty = \frac{(88.54)(2.1)}{5} \simeq 37 \text{ Angstroms.}$$

Again using $\epsilon_\infty = 2.1$ and the data of Fig. 12 and 13, a value of $\epsilon_r = 3.3$ at 1 Kc can be obtained, which falls within the range of the original estimates based on published data for polyvinyl acetate. By using these values for the layer thickness and the dielectric constant at 1 Kc, a predicted incremental capacity value can now be obtained as

$$\frac{1}{C} = \frac{t}{(88.54)(\epsilon_r)} = \frac{37}{(88.54)(3.3)} = 0.128 \left(\frac{mm^2}{nF}\right)$$

which corresponds closely to the value of ~ 0.132 obtained from the plot of $1/C$ vs N_p in Fig. 11.

The rather complex picture of the compacted PVB layers which emerges from the foregoing discussion can be summed up in the following way:

1. The compacted PVB film on the aqueous subphase has an average area per unit monomer of $\sim 8\ (\mathring{A})^2$, and is composed of several superimposed layers of molecules rather than a single layer.

2. The high and well-defined collapse pressures observed suggest that the PVB molecules not only are superposed but are interlocked in a regular way over large areas of the surface. It is probable that the large "flat" benzoate groups prevent free motion of the chains and lead to the observed rigid properties of the compressed films.

3. The average thickness of this compacted "superimposed" PVB film after transfer is approximately 37 $\mathring{A}$, and the film has a room temperature dielectric constant at 1 Kc of $\epsilon_r \simeq 3.3$. Multiples of this layer thickness can be obtained by successive transfer. Under certain and as yet unknown conditions, the compacted superposed layers can separate during transfer, to give an average transferred film thickness of approximately half this value. Considering the assumptions used, these thickness estimates are probably no better than $\pm$ 10 $\mathring{A}$.

4. The dielectric behavior of the PVB films is typical of a material with polar groups undergoing hindered rotations in the field, and with a room temperature relaxation time τ_m of $\tau_m = \frac{1}{2\pi f_m} > 1.6 \times 10^{-3}$ sec, where f_m is the frequency at maximum absorption.

4.3.3 Irradiation Studies

One of the objectives of the work mentioned above in regard to PVB deposition was to obtain multilayer coatings of the polymer to be subsequently cross-linked by radiation. As explained in the Third Quarterly Report, attempts to cross-link with irradiation from a Cs^{137} source relatively thick layers of PVB, deposited on NaCl substrate from a dilute solution, succeeded in that the PVB layers became insoluble after irradiation.

The cross-linking experiments on PVB monolayer films were run in the following manner: on thin 0.75 x 1 inch glass slides several parallel tin stripes about 2000 Å thick were deposited and these metal-coated slides were coated with various numbers of layers of PVB in the three manners of deposition described in Section 4.3.1. After layer transfer, cross-electrodes of tin or copper were evaporated onto the organic insulation in order to obtain metal-organic-metal sandwiches. The electrical properties of the successfully made sandwiches, such as I-V characteristics, capacity, and low voltage resistance, were then measured. The tested slides were subsequently enclosed in a sealed glass tube at a pressure of less than 5×10^{-6} mm Hg and were irradiated at room temperature with 4.5×10^{5} rad/hr for 240 hours by means of a Cs^{137} 0.666 Mev γ-ray emitter. At the end of this treatment the sealed tube was carefully opened, the slides removed and their electrical properties tested again. It was noticed that the irradiation had badly discolored both the glass tube and the tape used to mark it; the latter, in fact, had become brittle and weak. The slides had bunched up in the sealed tube, so that on removing them (and perhaps also while introducing

them into the tube) some mechanical damage was done to the metal stripes and probably to the organic coating. In any case, the samples were all found to be shorted after irradiation. Unfortunately, the disappearance of electrical resistance in the sandwich structures cannot be unequivocally assigned to the irradiation treatment.

4.3.4 Current-Voltage Characteristics and Temperature Dependence

In addition to the capacity measurements and irradiation studies, current-voltage (I-V) measurements have been made on a number of PVB samples at several temperatures. The capacity measurements give a film thickness value $t \propto 1/C$ in which non-uniformities in thickness t are weighted according to the factor $\left[1/t\right]$. The low voltage resistance values (R_o) from the I-V curves, however, are weighted according to the much more powerful factor $\left[1/\exp(t)\right]^*$. Small variations in thickness therefore can produce large variations in R_c for small variations in (1/C). In addition, any exposed oxide regions due to incomplete coverage can be expected to contribute powerfully to the low voltage resistivity, just as in the case of the stearate films discussed earlier. This type of behavior is shown in Fig. 14 in which the low voltage resistance R_o is plotted as a function of (1/C) for a number of PVB and PVB-stearic acid mixtures. It is obvious that R_o values differing by several orders of magnitude can be observed on samples having virtually the same $(1/C) \propto t$ values. The wide scatter of R_o values is typical of all the PVB samples tested, and at best it is only possible to indicate a general trend of increasing low voltage resistivity

*Assuming tunneling

with observed "average" thickness, and presumably greater coverage. Similarly wide variations have been observed in the shape and stability of the I-V characteristics from sample to sample.

Interesting memory effects have been observed in the electrical properties of some samples. For example, a number of Sn-PVB-Sn junctions at room temperature could be made to exhibit, at will, either a symmetric or a rectifying I-V characteristic for AC by initially applying a DC "forming" potential in the appropriate direction. The process was reversible upon reversal of the forming voltage and could be repeated many times. A similar reversal was observed under constant drive but variable temperature. If a potential was applied to maintain the sample in the asymmetric state and the sample was then cooled to liquid nitrogen temperature, a gradual transition back to the symmetric form of the I-V curve was observed, despite the continued presence of the biasing signal. Upon warming up the sample, the trend was reversed and the initial asymmetric curve was obtained. By contrast a number of Sn-PVB-Cu junctions on the same sample undergoing the same temperature cycle exhibited the inverse of this process, being initially symmetric, becoming asymmetric at low temperature, and again symmetric upon return to room temperature. Attempts to produce additional samples exhibiting this type of behavior were largely unsuccessful, new and different characteristics being obtained despite the apparent similarity in formation procedures. Other than noting that these were the thinnest PVB samples obtained, and that they were subsequently found to exhibit large changes in dielectric constant with frequency, an explanation of this unique type of behavior cannot be given. The current-voltage characteristics of such a film at room temperature are given in Fig. 15

which plots log I vs V. The behavior with temperature at constant voltage is given in Fig. 16. The data for the latter curves were obtained using very low frequency AC (0.1 cps). A reversal of the asymmetry in going from room temperature to liquid nitrogen temperature to room temperature was observed. The temperature cycle also produces a change in the overall current level, which shifts the curves vertically without a significant change in the end-point current ratio. Between room temperature and liquid nitrogen temperature the current drops by about a factor of three suggesting that the thermionic contribution to the current flow is significant only near room temperature, most of the current at $77^{o}K$ flowing by field emission (tunneling).

The electrical measurements on the PVB films can be briefly summarized by stating that PVB films are arranged as complex "multi-layers" on the substrate surface, that they do yield unusual I-V characteristics of theoretical and possibly practical interest, but that wide variations of properties and lack of reproducibility have so far handicapped attempts to interpret these I-V characteristics in terms of a molecular model of the film.

4.4 Other Techniques and Materials

As discussed in the introduction, the main effort in this work was devoted to the study of Langmuir films. Exploration of other techniques and materials was, in comparison, sporadic and necessarily inconclusive. Thus, only a brief summary of our work in these areas is given, which, however, contains some pointers for future work.

4.4.1 Interfacial Polycondensation

This relatively recent process consists in bringing a solution of a diacid halide in an inert, water-immiscible organic solvent, into contact with an aqueous solution of a diamine, for example. If this is done without stirring, and if the organic liquid is a non-solvent for the reaction product, a thin film of polymer will be formed at once at the interface. The formation of poly (hexamethylene sebacamide) from hexamethylene diamine and sebacoyl chloride illustrates this process:

$$H_2N(CH_2)_6NH_2 + ClC(=O)(CH_2)_8C(=O)Cl \rightarrow \left[NH(CH_2)_6NHC(=O)(CH_2)_8C(=O) \right]_n + 2nHCl$$

Under the right conditions this polymer is tough, has a high molecular weight and is relatively thin, its thickness depending, inter alia, upon the concentration of the solutes, the rate of diffusion of the diamine through the already formed polymeric film into the organic phase, and the reaction times. Short reaction times have been reported to yield wet films with a thickness of 0.1μ[13]. Presumably even thinner films might be obtained by a combination of short reaction times and very low concentrations.

Several solutions of different concentrations of sebacoyl chloride in carbon tetrachloride and of hexamethylene diamine in water respectively, were prepared and interfacial polymeric films obtained according to the method outlined by Morgan and Kwolek[14].

Glass microscope slides were quickly pulled through the interfacial film. When the concentration of the reactants was relatively high (e.g. 0.0093 mole sebacoyl chloride in 100 cc CCl_4 and 0.038 mole hexamethylene diamine in 50 cc of water) the resulting very tough and thick film did not deposit evenly on the slide, but tended to be pulled away from it. At lower concentrations (e.g. 0.0045 mole of sebacoyl chloride in 500 cc of CCl_4, and 0.038 mole of hexamethylene diamine in 500 cc of water), no visible film was formed at the interface. However, a slide raised through this type of interface acquired a thin inhomogeneous coating. More homogeneous coatings were obtained by dipping the clean slides into the dilute organic phase first; the solvent was then allowed to evaporate, and the slide, now covered with a thin coating of reactive acid chloride molecules, was dipped into the dilute water solution of hexamethylene diamine. The thin films obtained in this manner still were not continuous as shown by wetting experiments.

A possible way to achieve films of molecular size thickness may be offered by the monolayer technique. If either reactant spreads monomolecularly, it could be transferred under pressure onto the desired solid substrate; this monolayer could then be made to react with the second reactant, either by exposing it to vapors of the latter or by immersing it into a dilute solution of the latter. In this way the thickness and form of the polymeric film would be a function of the concentration and geometric arrangement of the reactant on the substrate.

4.4.2 Evaporated Films

Formvar and styrene were the principal materials used in this work, the objective being to produce films in the 30-200 Angstrom range, to be subsequently cross-linked by ultraviolet irradiation. Evaporation was performed under vacua greater than 10^{-8} torr in an all-metal system, the film thicknesses being monitored by a quartz crystal microbalance[15].

4.4.2.1 Formvar Films

The films are deposited by heating Formvar 15/95E to about $450^{\circ}C$ in vacuum. The films so formed have a high degree of stability and reasonable electrical resistance, 10^{10} ohm-cm, in the thin-film region, $\sim$ 100 Angstroms.

The process of evaporation in fact consists of degrading and volatilizing the source material, and only fragments of the original molecules adhere to the crystal monitor and the substrate. However, most of the material which is deposited onto the solid substrates exhibits an extremely low vapor pressure after deposition. From a plot of weight loss versus time following evaporation, a vapor pressure of $1\text{-}3 \times 10^{-11}$ torr is calculated for the period 10 to 30 minutes. The uncertainly arises from a lack of knowledge of the molecular weight of the material.

These weight loss determinations have been made for deposits on silicon monoxide, gold, zinc, tin, and aluminum substrates with essentially identical results provided the evaporation rate is about 0.5 Å/sec. Moreover, irradiation of the deposits during and after deposition with

ultraviolet light has produced no measurable effect on this property. After about one hour in high vacuum, no further weight loss can be detected. Higher evaporation rates give rise to more volatile films, suggesting a more complete fragmentation of the source material.

Commercial Formvar 15/95E is a substituted polyvinyl formal available as a white, free-flowing powder with a weight average molecular weight of 34,000 and a specific gravity of 1.2. This material may be represented by the following stylized structure:

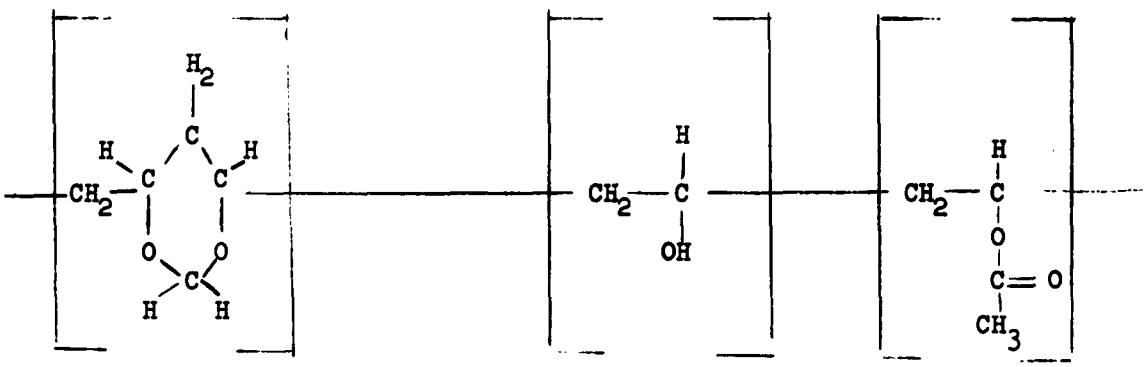

PV Formal PV Alcohol PV Acetate

A sample of this material weighing 0.0656 g was heated for 0.5 hour at 500°C in vacuum. A total of 8.7171 cc of gas was evolved from this sample, 22.6 percent of which consisted of C_1-C_7 hydrocarbons.

Table I gives the results of the mass spectrometric analysis of the degradation products obtained.

TABLE I

Volatile Products From High Temperature Vacuum Degradation of Formvar 15/95E, Mole Percent

H_2	CH_4	C_2H_4	CO	CH_2O	C_3H_6	CO_2	Butenes	C_4's	C_6H_6	C_7H_8
24.75	4.51	3.04	24.85	2.0	3.87	30.43	3.40	2.25	0.63	0.31

Weight percent of H_2 based on sample weight = 0.27

Weight percent of CO based on sample weight = 3.75

Weight percent of CO_2 based on sample weight = 7.23

The results shown in Table I indicate that Formvar treated under the conditions specified above is degraded very severely. There is evidence that the formal, hydroxyl and acetate groups present in the original sample are destroyed giving rise to the carbon monoxide, carbon dioxide, formaldehyde, hydrogen and lower molecular weight hydrocarbons shown in the Table. The presence of the relatively higher hydrocarbons could be explained by the rupture of the main $\left[CH_2\right]$ chain. It is likely that the latter fragments are responsible for the very thin and stable insulating coating observed on the microbalance crystal. If this is true, then the thin film would be very similar to a type of low molecular weight polyethylene.

All this points to the fact that the mechanisms of formation of thin films by "evaporation" of a polymer requires a thermal breakdown of the polymer molecule first, followed by evaporation of the volatile produces and condensation on the solid substrate of the volatilized fragments with lowest vapor pressure.

4.4.2.2 Styrene Films

The principal effort was directed to selective polymerization of styrene monomer to produce polystyrene films in the range of 40 to 200 Angstroms. It was proposed that the polymerization might be effected by introducing styrene monomer into the vacuum chamber and exposing the selected surfaces to an ultra-violet light source by appropriate masks. Crystal microbalance monitored film growth under these conditions indicated that a thin film can be formed by this means, and that this film is stable in vacuum after the styrene flow is shut off.

However, when such films are grown on previously evaporated metal stripes,and metal cross-stripes are evaporated, the resultant junctions appear to be short circuits for the most part. These short-circuited junctions probably arise from one or both of two causes: (1) pinholes in the insulating film, or (2) "needle" growth of the underlying metal films due to heating by the light source.

Some of the good junctions which were produced by the polymerization method were tested on a low duty cycle tester consisting of a pulse generator, a fast electrometer and an oscilloscope. The sensitivity was about 2×10^{-8} amps for 5 μ second pulses. These junctions showed characteristics quite similar to those obtained for devices made with stearate films, in that significant departure from linearity was observed at low voltages, about one volt or less.

5. OVERALL CONCLUSIONS

Under carefully controlled conditions, it is possible to deposit substantially void-free mono- and multilayers of stearates and polyvinyl benzoate onto evaporated Cu and Sn film substrates. Layers sufficiently free of voids to show non-ohmic characteristics cannot be transferred onto noble metal substrates. The current through void-free films can be described in terms of a combined tunneling and Schottky emission mechanism. The activation energy for the conduction process is low for the electrode materials investigated, being of the order of 0.25 ev. Such a low activation energy effectively rules out the application of these materials as efficient tunneling barriers.

The technique of monolayer deposition by the Langmuir method is one of considerable difficulty, if completely homogeneous, void-free films are required. Despite the substantial effort expended to produce such films, our success was sporadic, and we believe that it is unlikely that the method can be made compatible with a device fabrication procedure, where close tolerances and high reproducibility are required together with a certain ruggedness of the apparatus.

Radiation-induced crosslinking has been observed on bulk polyvinyl benzoate, but experiments on monolayers have remained inconclusive.

From a combination of capacity measurements, molecular weight and bond-length considerations it was concluded that the stable "monolayer" of PVB is composed of 3-4 interlocking layers of molecules.

Some interesting memory effects have been observed in sandwiches formed with PVB, which may find application as analog memory elements.

Interfacial polycondensation techniques have been explored only to a point, where indications of possible ways of forming films of molecular thickness have been obtained.

In a brief exploration of the ultraviolet irradiation crosslinking of adsorbed monomers, no electrical effects attributable to irradiation have been found.

6. RECOMMENDATIONS FOR FUTURE WORK

In the present investigation, great emphasis was placed on achieving reproducible results by the Langmuir process. The fact remains that despite the rather elaborate instrumentation and the extensive precautions taken to ensure cleanliness, our success in this direction was limited. This must be attributed to two factors: 1. the extreme sensitivity of the electrical characteristics to film structure and uniformity and 2. the non self-healing nature of the film formation process. Taken together, these factors militate strongly against the practical utilization of Langmuir films in active thin film devices.

A further detrimental factor, at least for the combination of materials investigated, is the low thermal activation energy for conduction through the films. The low activation energy does not permit the development of a sufficiently high voltage across such barriers to serve as useful room temperature hot electron emitters, although they could conceivably be used as collector barriers in a tunnel emission triode.

Clearly only a very small fraction of film forming organic materials and electrode metals have been investigated,* and the possibility exists that other combinations with yield higher activation energy barriers. However, in the absence of any significant pointers in this direction, taken together with the difficulty of the technique, we feel obliged to recommend that no further effort should be devoted to this particular approach to thin film hot electron devices intended for operation at room temperature.

---

*This is largely due to the fact that reproducibility of results was hard to come by, even for the small range covered.

These considerations do not apply with the same force to low temperature, low voltage applications, such as a superconductor tunnel device, or to applications where thicker insulator films are required, for example thin film capacitors or protective coatings for devices. At the same time, there appear to be no significant advantages of Langmuir films over more conventional techniques in these latter areas.

Other applications or organic monolayers, such as metal-to-plastic bonding and the construction of soft x-ray gratings have been recently reported. These do not require perfect monolayers, and are probably better matched to the inherent properties of Langmuir films. A possibility exists of utilizing the sensitivity of some types of monolayers to changes in the ambient temperature and atmosphere.

7. APPENDIX

7.1 Preparation of Glass Slides for Electrode Evaporation and Organic Thin Layer Deposition

The solid substrates used for these organic structures were standard 1" x 3" softglass microscope slides. The slides were engraved with consecutive numbers which were used for identification throughout fabrication and testing.

Several cleaning methods were tried, but the following was found to be the most satisfactory.

The slides were scrubbed manually in a paste of Alconox detergent and warm tap water, and rinsed extensively in running hot tap water. They were next rinsed in a running deionized water, then blown dry in a clean dry nitrogen stream. For the last two steps the slides were held in tweezers by one corner, and the flow of water and nitrogen over the slide was directed toward this corner to eliminate possible contamination from the tweezers.

The cleaning and rinsing is of the utmost importance, for residual impurities or trace amounts of detergent will contaminate the aqueous subphase in the Langmuir trough and decrease or completely eliminate the adhesion of the monolayer to the solid substrate. As a measure of the cleanliness of the slide the Langmuir transfer process was reversed. The slide was passed through the clean aqueous subphase without an organic monolayer. If any non-soluble surface contaminants were present on the slide, a portion would transfer to the surface of the water, and could then be detected by reading the pressure exerted on the hydrophil balance.

The metallic film depositions were made in two vacuum evaporators. In the vacuum system used for the majority of the samples, the evaporations were made at a pressure of 2 to 8 x 10^{-7} torr after about four hours of pumping time. A few of the samples were coated in a second system which pumped to a pressure of approximately 3 x 10^{-6} torr with about sixteen hours' pumping. In both evaporators, molybdenum boats were used as sources, with a source to sample distance of $\simeq$ 20 centimeters. The evaporations were made rapidly (10 to 15 sec) using time of heating and heater current to control the film thickness. Uniform opaque metal films, of approximately 2000 Å, with resistivity of 0.75 ohms per square were consistently reproduced by these methods.

Following the evaporations, the slides were removed, placed directly in a clean dust-tight container, and stored in a dust-free hood. This was done to insure clean dust-free slides for the organic film transfer operations.

7.2 Thin Layer Deposition by the Langmuir Method

Our preliminary investigation of barium stearate monolayers was carried out according to the method set forth by Blodgett,[5] in which the lateral pressure necessary to orient the molecules vertically and to pack them as closely as possible was provided by a "piston oil" acting against a thin nylon thread containing the monolayer.

Although barrier films were obtained in this manner, it was recognized that more reproducible results could be obtained if a film-balance built on the principles described by Langmuir was used for the study of monolayer characteristics, modified so as to permit dipping of solid substrates while the monolayer film is kept under known constant pressure.

The film forming apparatus consists essentially of a shallow trough filled with water, on which the monolayer is spread. A barrier laid across the trough behind the monolayer is made to push the edge of the film against a float connected to a torsion wire balance, which measures the pressure exerted by the film as it is compressed.

As the barrier moves toward the float, thus continuously reducing the area, all the molecules start to be oriented toward the vertical under the increased compression. The random horizontal motion and the electrical repulsion of the molecules in the monolayer offer resistance to this compression, thus creating a lateral surface pressure.

If each value of pressure encountered during the barrier's motion is plotted versus the corresponding area, a curve is obtained whose

slope is the compressibility of the monolayer. The steeper the slope, the lower the compressibility of the layer, an indication that the molecules pack tightly and that the cohesive forces between molecules are considerable.

On increasing the compression of the film, the pressure exerted against the balance float either remains constant or, most frequently, falls at a pressure value called "collapse pressure", which is a fixed property of each film former.

The collapse of the film has been postulated to take place as follows: after maximum surface pressure is reached, additional compression forces some molecules out of the film. As compression increases, a tightly packed layer, two molecules thick, rises from the surface, bends and breaks, leaving a collapsed fragment resting on the film.

The collapse pressure reflects both the strength with which the film adheres to the surface of the water (i.e., the strength of the polar groups) and the strength of the cohesive forces. The stronger the polar groups, the more tightly it adheres to the surface of the water; the greater the cohesive forces, the stronger the film.

It has been shown that only at pressures very close to the collapse pressure are homogeneous thin layers of uniform thickness obtained. At pressures much below the collapse pressure the monolayers are inhomogeneous, consisting of many islands of aggregated molecules of film former.

The success of the study of tunneling phenomena through thin organic films and of the attempts to manufacture working tunnel-effect or related devices lies primarily with the ability to supply thin insulating

organic layers of reproducible known thickness, as free of molecular voids and as homogeneous as possible. It is therefore necessary that: (a) means to measure pressures of various types of monomolecular layers under a variety of conditions during the transfer to solid substrates be available; (b) such apparatus be contained in dust-free enclosures in order to avoid disordered arrangements in the monolayer brought about by the presence of relatively large extraneous particles; (c) the apparatus be thermostated because of the effects of temperature on the behavior of monolayers; and (d) vibrations of the total assembly be minimized in order to prevent setting up of waves on the water surface under the monolayer and to improve the reproducibility of the results.

The Langmuir film apparatus constructed according to be above guidelines consists of a modified Cenco Hydrophil balance of the Langmuir-Adam-Harkins type, housed in a double wall thermostated cabinet (a modified Thelco gravity convection incubator) placed on a vibration-damped base. Pressure and area adjustments, as well as transfer of film sample, are made with the cabinet closed.

The original aluminum trough which came with the Cenco balance was modified by attaching a well to its floor near the balance float, in order to allow dipping of relatively large solid substrates; the trough was coated with Teflon by the Slipmate Co., Franklin Park, Illinois. The purpose of the Teflon coating is to provide a hydrophobic surface so that the water surface meeting the coating has a positive meniscus and can be raised high enough to interpose the monolayer between the barrier and the float. Another important function of the Teflon coating is that of preventing metallic impurities from the trough from interfering with the aqueous solutions.

The Teflon-coated stainless steel barrier which compresses the monolayer against the balance float is pushed forward at a speed of 1 to 7 mm per minute (according to the material used and prevalent conditions) by a yoke carriage connected to a ball screw which provides a very smooth motion. The arm to which the sample to be dipped is attached is moved up and down by means of the same type of screw at a speed of 1-2 mm/min. Both screws are connected through flexible connections to variable speed motors through speed reducing gears.

Considerable effort was expended in reducing the vibrations being transmitted to the Langmuir bath from the building structure. The final arrangement consisted of suspending the apparatus from the ceiling with 5/8" thick shock cords.

In order to prevent jarring the softly sprung table and setting up waves on the aqueous subphase in the trough during a run, all the controls of the mechanisms for the horizontal barrier motion, the vertical slide dipping and retrieving motions and the balance zeroing motion were assembled and mounted in a remote control box. Figs. 17-22 show details of the apparatus.

The procedure adopted in making a run was as follows:

The Teflon-coated aluminum trough is washed with distilled water, CP acetone, Spectro Grade (S.G.) benzene, then suspended in a trichloroethylene vapor degreaser for 10 minutes. At the end of this time the clean trough is placed in the previously vacuum-cleaned dust-proof enclosure and levelled carefully.

All the parts of the balance that come in contact with the aqueous substrate, such as the mica float, the platinum foils and the silk fibers, are carefully cleaned with Spectro Grade benzene, allowed to dry, then

coated with a thin solution of hard wax in S.G. benzene. After about one hour, these wax-coated pieces are placed in a small aluminum trough and rinsed abundantly with deionized water. Then the cleaned and waxed balance is fitted on to the Teflon-coated trough and connected to the remote control mechanism.

At this point the trough is filled with the aqueous substrate to a level such that a positive meniscus of about 2 mm is obtained. It has been found that the Teflon coating on the trough is invaluable in insuring non-wetting and stability of the aqueous substrate.

The surface of the aqueous substrate is then repeatedly swept, in front and behind the balance, with waxed or Teflon-sprayed metal bars or with glass bars which push surface impurities away from the balance and out of the trough. The degree of cleanliness of the surface, a paramount characteristics for successful film formation and transfer, is then measured by moving a bar, placed across the trough, longitudinally toward the balance and recording the number of degrees the torsion wire of the balance has to be twisted to maintain the zero at a predetermined position of the bar, usually at about 2 cm from the balance float. A deviation of about 0.7-0.8 degrees, equivalent to a pressure of about 0.5 dyne/cm, is considered satisfactory cleanliness.

The sample consists of a standard 1 x 3" microscope slide on which the base electrodes have been deposited by vacuum evaporation. The sample, suspended from the dipping arm by a nylon clamp, is quickly dipped into the bath and raised. Again a bar is moved from one end of the trough toward the balance, the amount of contamination, if any, contributed by the slide is measured and the surface of the aqueous substrate swept clean again if necessary.

Finally, (if initial B layers are desired[7]) the slide is lowered completely into the bath so that the surface of the latter is only broken by the nylon clamp, and the monolayer solution is gently dropped on the surface of the substrate using a very accurate transfer pipette calibrated to 0.002 ml. Ten minutes are usually allowed for the monolayer to spread and for the solvent to evaporate. Compression is then exerted by means of a wax- or Teflon-coated stainless steel bar, generally at a speed of 1-2 mm/minute. Pressure readings are at first taken every 10 mm of bar travel (the balance is continuously reset to zero in order to avoid changes in pressure due to the displacement of the mica float). When the pressure recorded by the balance starts increasing much more rapidly than the area decreases, readings are taken every five millimeters, and every millimeter when nearing the collapse pressure.

When the desired pressure is arrived at, the slide is raised through the monolayer, and the pressure is kept constant by adjusting the speed of the compression barrier so that it sweeps the area at the same rate at which the monolayer is picked up by the emerging slide.

When the slide is completely out of the trough, it may be allowed to dry for 10 minutes before being dipped for an A layer or dipped immediately, depending on the material investigated.

At the completion of the transfer operation and before disassembling the apparatus for cleaning, the tightness and reliability of the balance are checked by maintaining it zeroed at the same pressure at which the monolayer transfer was effected. Then the smaller area of aqueous substrate <u>behind</u> the balance is swept with a sweep bar. If any significant

[7] A B-layer consists of molecules whose hydrophilic groups are oriented towards the substrate. An A-layer has molecules oriented in the opposite direction.

amount of monolayer has leaked by the balance to this portion of the surface, it will be swept away, therefore removing the pressure from the side of the mica float opposite that against which the compression barrier moves, thus affecting the zero of the balance. The sensitivity of this method is of the order of 0.1 dyne/cm.

The success of a deposition run by the Langmuir method, quite apart from the electrical results, depends on and is judged by the reproducibility of actual experimental variables such as compression-bar travel as a function of slide area, appearance of meniscus between aqueous subphase and slide, the stability of buffer meniscus over trough edges, tightness of balance, reproducibility of null point on the balance and dryness of slide immediately after removal from the bath.

The aqueous substrates vary according to the type of monolayer material used.

For stearic and hexacosanoic acids, the substrate consists of a 0.02 MCl solution. This substrate is used in general for the fatty acids. In the case of polyvinyl benzoate, the substrate is deionized water (with a resistivity of over 1 megohm) and pH of about 6.5-7.0.

When Y layers[7] of calcium or barium salts of the fatty acids are desired, the substrate is made as follows:

1. 2.6 volumes of a 0.1 M solution of potassium phosphate monobasic and 7.4 volumes of a 0.1 M sodium phosphate dibasic solution are mixed together; this is the buffer solution.

2. 1 ml of a 0.1 M solution of Ba or Ca acetate solution and 2.5 ml of the above buffer solution are mixed with a liter of deionized

[7] Y-layers consist of alternating A and B monolayers, and are deposited by picking up a layer on each up and down motion of the substrate.

water to give a pH of about 7.0, which can be adjusted downwards with the addition of 0.1 N acetic acid.

Very highly purified stearic and hexacosanoic (26 carbon atoms) acids were dissolved in Spectro Grade benzene in such a ratio that 0.5 ml of solution would contain 29.16×10^{16} molecules of either acid.

The water used for the various aqueous substrates was purified by passing it through ion exchange resin columns, through an organic material removing column and by bubbling argon into it to remove CO_2.

Polyvinyl benzoate was prepared in this laboratory as follows: the inhibitor from vinyl benzoate obtained from the K and K Laboratories was removed by shaking the monomer repeatedly with 2 percent NaOH, washing with water until neutral, then drying over calcium sulfate. Azo-bis-isobutyronitrile was used as the initiator (0.05 percent by weight of monomer); the monomer-initiator mixture was frozen and evacuated several times, then sealed in a reaction tube and heated for 66 hours at 80°C. The very viscous reaction product was dissolved in S.G. benzene and reprecipitated with methanol. It gives white polyvinyl benzoate. Solutions of polyvinyl benzoate in S.G. benzene were made in such a proportion that 1 ml of solution contains 1 mg of polymer which spreads to 0.38 m^2.

7.3 Completion of Metal-Organic Insulation Metal Sandwiches

After the organic deposition, these slides are again placed in the evaporator for application of the second metal film. The masks used were designed to provide long stripes and cross-stripes 1 millimeter wide to give several junctions of one square millimeter active area on each slide. The second evaporations were also made rapidly (10-15 seconds) with high source temperature to produce homogeneous electrodes, and to reduce heating which could lead to possible destruction of the organic layer. The deposition rate D is proportional to the rate of evaporation of the metal, which in turn depends on the vapor pressure (P_v) of the metal at the source temperature. On assuming a power-law relation P_v = const. T^n, the change of the deposition rate with source temperature T is given by

$$\frac{d \log D}{d \log T} = \frac{d \log P_v}{d \log T} = n.$$

From Hönig's[16] curves a value of n = 22 is obtained for tin. This indicates that the deposition rate of tin increases approximately as the 22nd power of the source temperature. The radiated power (W) however, increases only as the fourth power of source temperature so that higher boat temperatures will produce equivalent metal films with significantly less sample heating.

After the second evaporation, contact pads of Au, Ag or Pt conductive cements were painted on the slide to insure good connection for the electrical testing. After this paint was dry, the junction capacity was measured using a General Radio 1608 CRL bridge. This test supplied information as to the success of the monolayer transfer. These capacity and conductance values gave a direct measure of uniformity across the slide, allowed an estimate of the monolayer thickness, and indicated whether or not the sample warranted further testing.

The current-voltage (I-V) characteristics were measured by applying a low frequency (0.01 to 0.1 cps) positive- and negative-going triangular wave to the junction as shown in Fig. 23. Four terminal measurements were made whenever possible, unless the conductor resistance was negligible compared to the junction resistance. In those instances two or three terminal measurements were made. The current was measured on a Keithley 610A microammeter, and the voltage was measured on a Keithley 603 differential voltmeter. The I-V trace was plotted directly on an X-Y plotter for a range of voltages and currents.

The sample holder used for the low temperature measurements is shown in Fig. 24. The slide (A) is placed in direct contact with the upper copper block (D) and held down by 22 individually spring-loaded indium headed contact pins (C). The contact blocks (B) were spring-loaded to insure good contact and pressure throughout the range of temperature. The temperature-measuring thermocouple was placed in the upper copper block in contact with the slide. A thin wall copper tube (E) was brazed between the upper and lower copper block. This entire assembly was set into a vacuum dewar for the tests. Liquid nitrogen was introduced into the dewar to a level which would cover the lower copper block. A copper shield (F) surrounded the entire assembly and was supported by this lower copper block. The bottom of this shield was in the liquid nitrogen and was cooled very rapidly. This shield served as a radiation and moisture shield. The sample was cooled slowly by conduction through the copper tube and the rate of cooling and final temperature were determined by the liquid nitrogen level. Measurements were made as the sample temperature was lowered and raised. To raise the temperature dry gaseous

nitrogen was blown into the dewar, so that liquid nitrogen was removed, and the possibility of moisture entering the dewar was reduced. This sample holder provided a convenient method of obtaining I-V characteristics for the range of temperature required.

8. REFERENCES

1. J. L. Miles and H. O. McMahon, J. Appl. Phys., 32, 1126 (1961).
2. R. W. Roberts and J. L. Gaines, Jr., Trans. 9th Nat. Vac. Symp. 55(1962).
3. H. D. Cook and H. E. Ries, Jr., J. Phys. Chem. 63, 226 (1959).
4. R. E. Aitchison, Aust. J. Appl. Sci., 5, 10 (1954).
5. K. B. Blodgett, J. Am. Chem. Soc. 57, 1007 (1935).
6. K. B. Blodgett and I. Langmuir, Phys. Rev. 51, 964 (1937).
7. H. Schonhorn, J. Colloid Sci. 18, 445 (1963).
8. H. E. Ries et al, J. Colloid Sci., 16, 361 (1961) and Nature 181, 901 (1958).
9. L. H. Germer and K. H. Storks, J. Chem. Phys. 6, 280 (1938).
10. H. E. Ries et al, Nature 186, 883 (1960).
11. D. J. Mead and R. M. Fuoss, J. Am. Chem. Soc. 63, 2832 (1941).
12. C. P. Smyth, "Dielectric Behavior and Structure," Chapter 5, McGraw-Hill Co., 1955.
13. P. W. Morgan and S. L. Kwolek, J. Polymer Sci. 40, 299 (1959).
14. P. W. Morgan and S. L. Kwolek, J. Polymer Sci. 62, 33 (1962).
15. P. M. Waters and P. O. Raygor, W Research Report 62-115-452-R2, (1962).
16. R. E. Hönig, RCA Rev. 18, 195 (1957).

9. RESEARCH STAFF

The following scientists have contributed to the project:

Dr. T. P. Brody Principal Investigator	448 hours
Dr. R. M. Handy Senior Engineer	1000 hours
Dr. L. C. Scala Senior Chemist	1832 hours
Dr. P. M. Waters Senior Physicist	544 hours

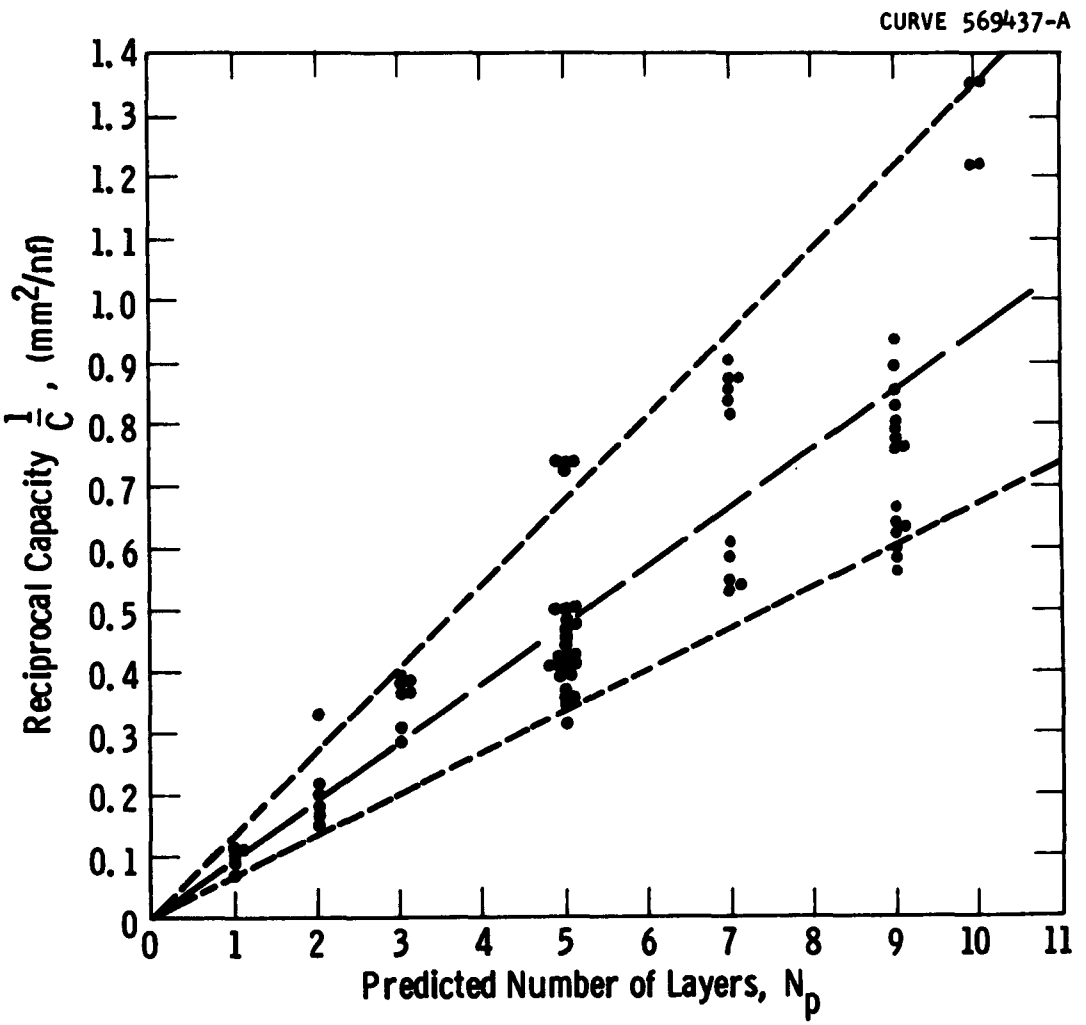

Fig. 1—Reciprocal capacity vs predicted number of layers

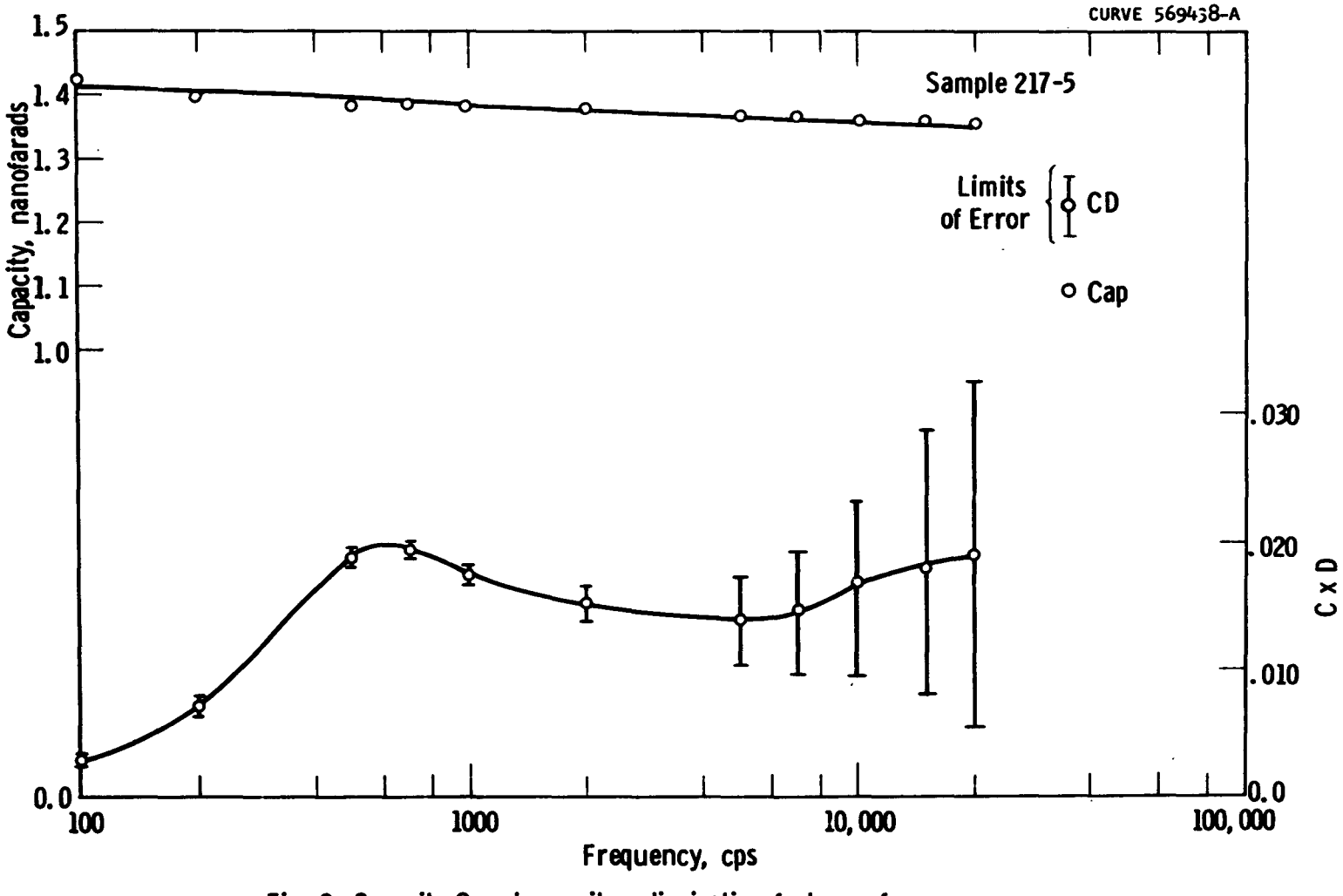

Fig. 2—Capacity C and capacity x dissipation factor vs frequency

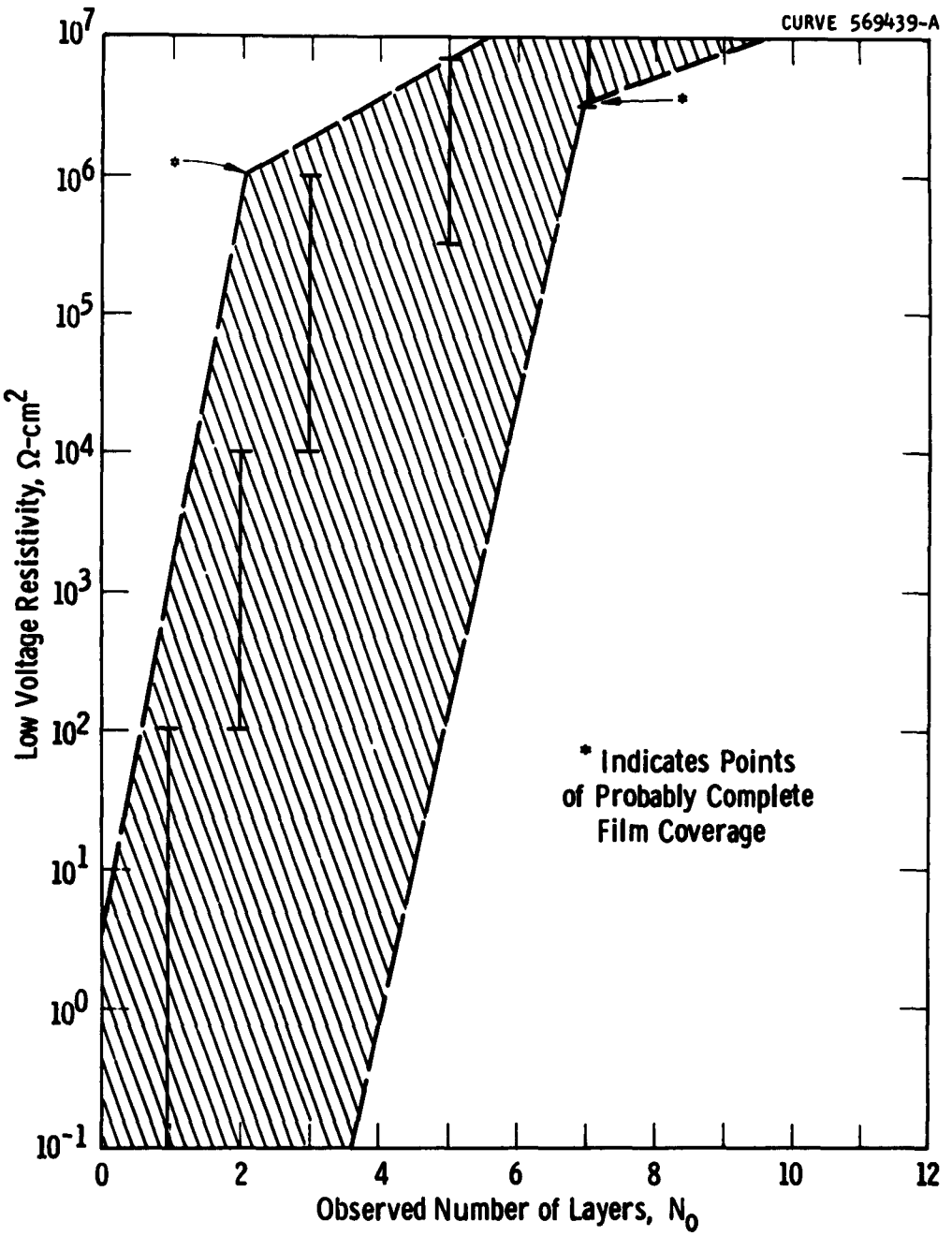

Fig. 3—Low voltage resistivity vs observed number of layers

CURVE 567042-B

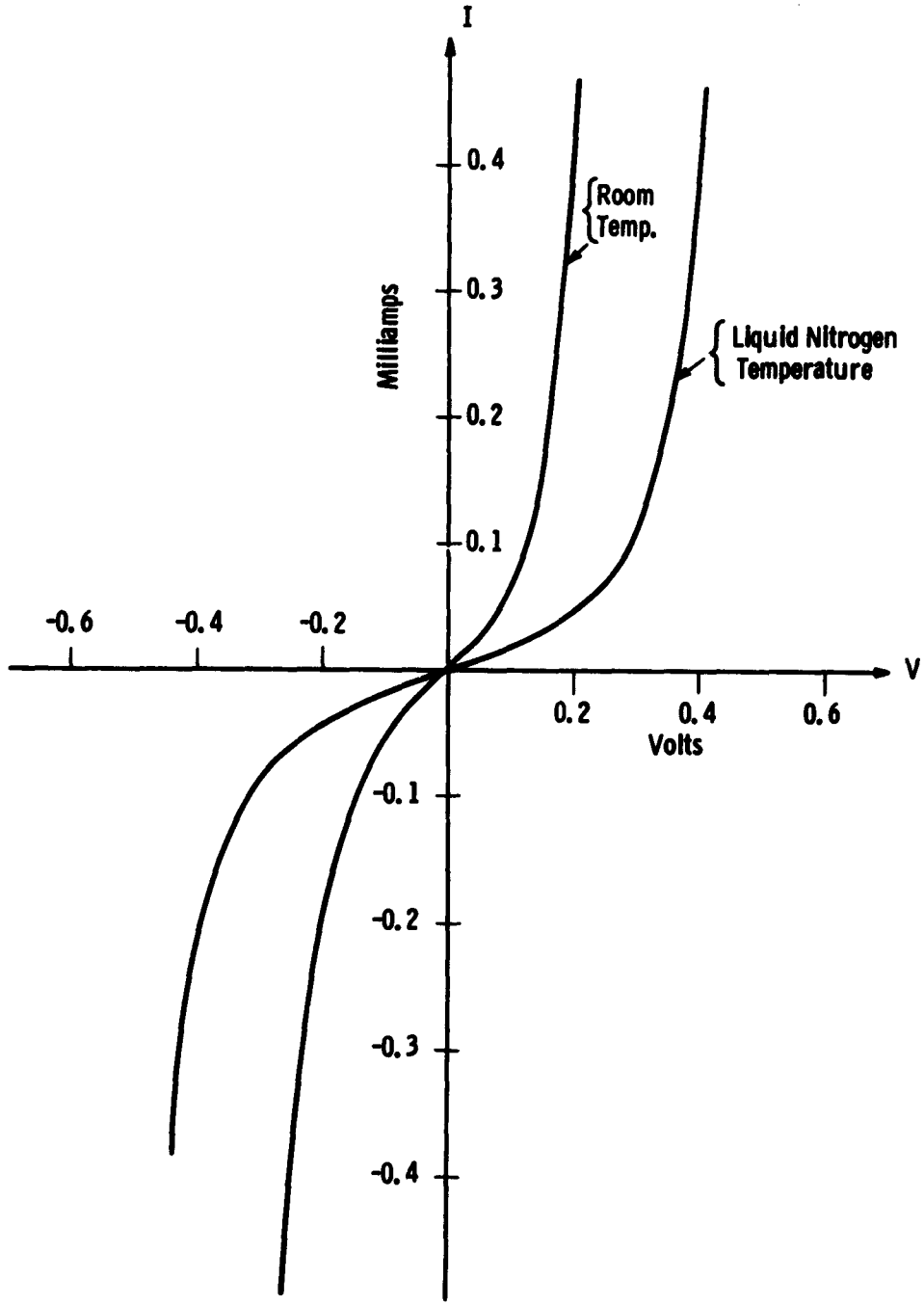

Fig. 4—Current-voltage characteristics at 0.1 cps of a Sn - 3 layer calcium stearate - Sn sandwich of ~ 1 sq. mm area at two temperatures. Polarity is that of organic coated tin base layer. (Sample #142, junction No. 5)

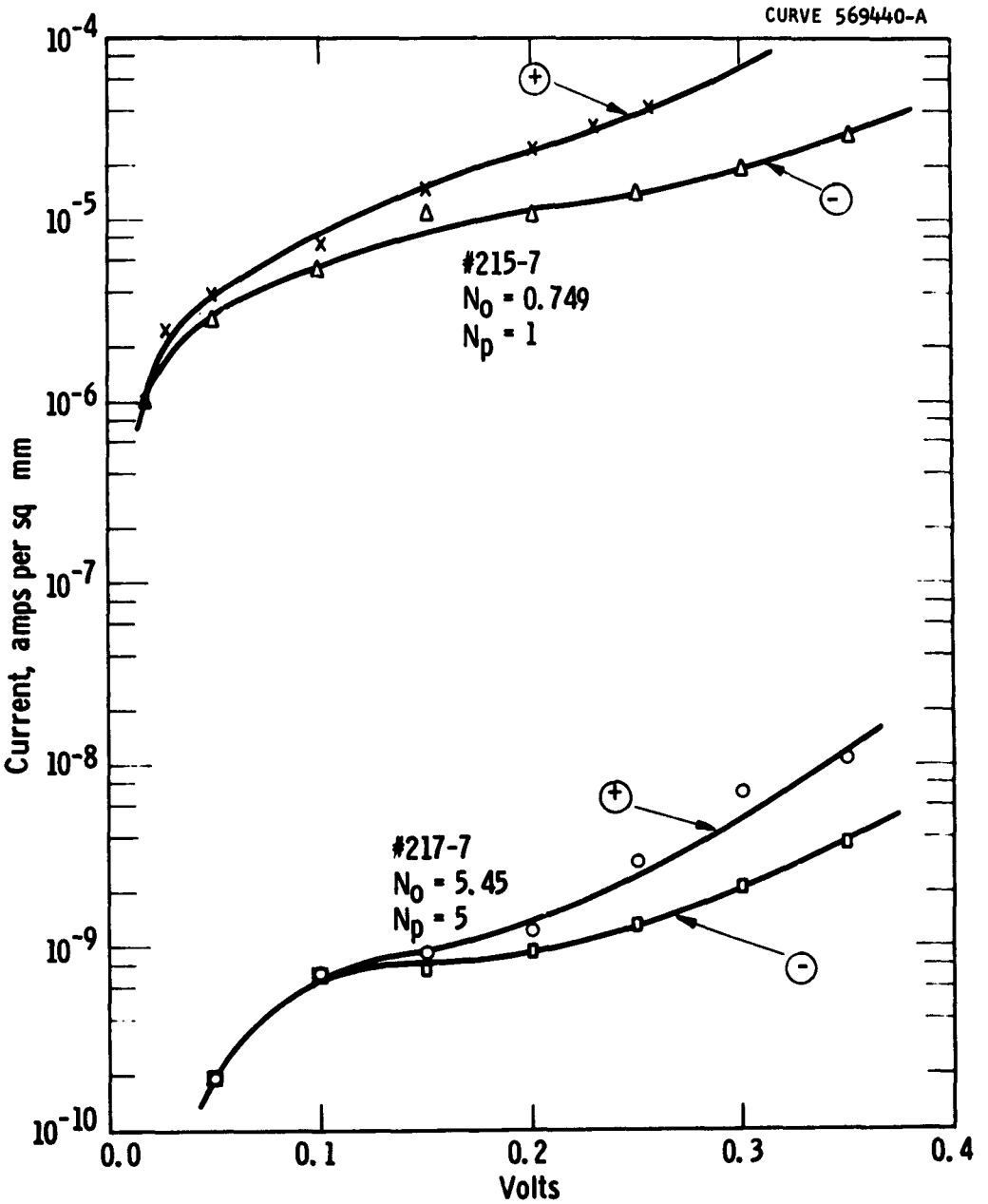

Fig. 5— Current voltage characteristics of a one and a five-layer Sn-stearate-Sn sample. N_p = predicted number of monolayers. N_0 = observed number of monolayers as calculated from measured capacity assuming t_r = 2.1. ⊕ and ⊖ indicate polarity of organic coated base layer.

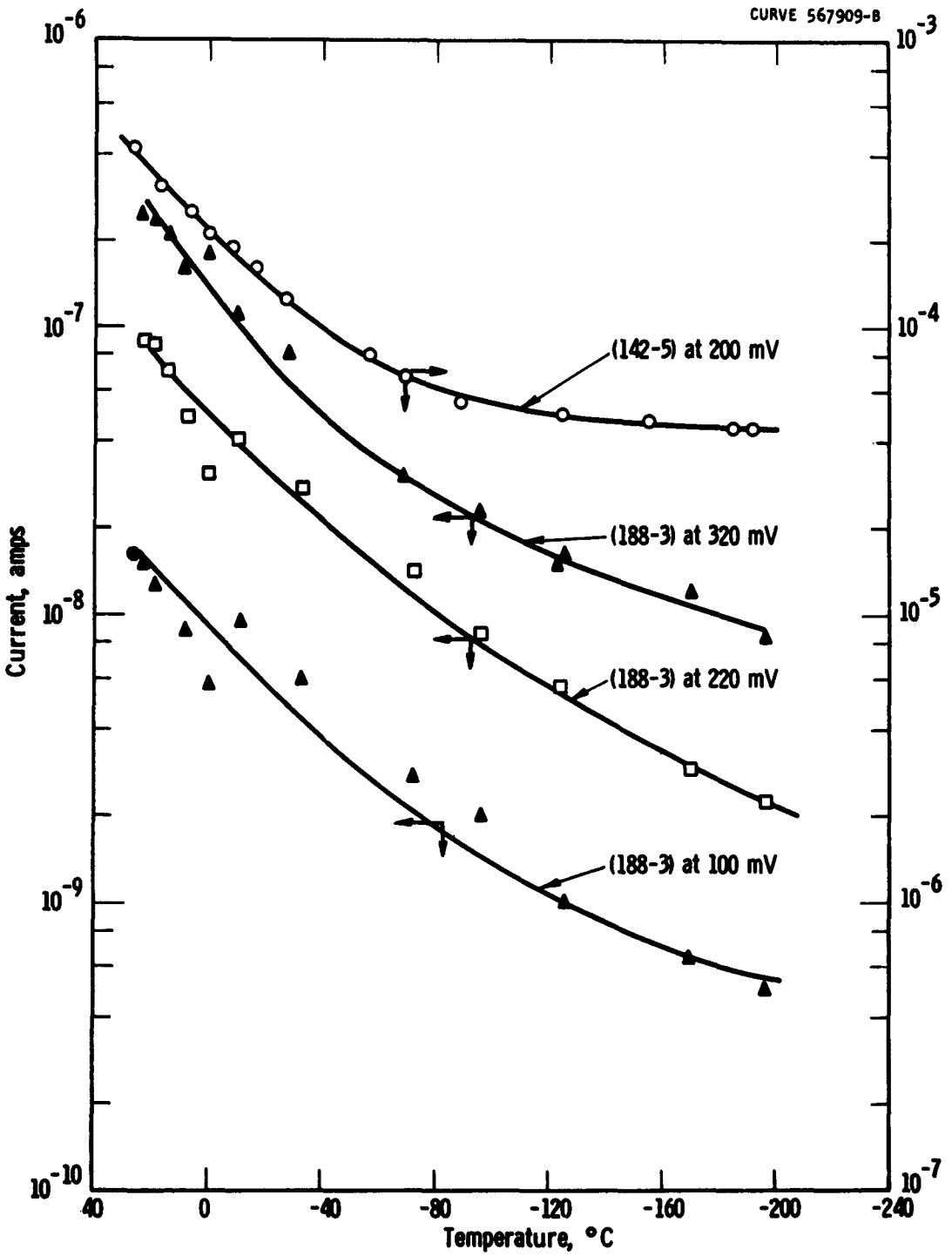

Fig. 6—Plot of current vs temperature at constant voltage for two junctions. Junction (142-5), upper curve, is ~ 3 monolayers thick. Junction (188-3), three lower curves, is ~ 5 monolayers thick. Polarity of test voltage is organic coated base electrode positive.

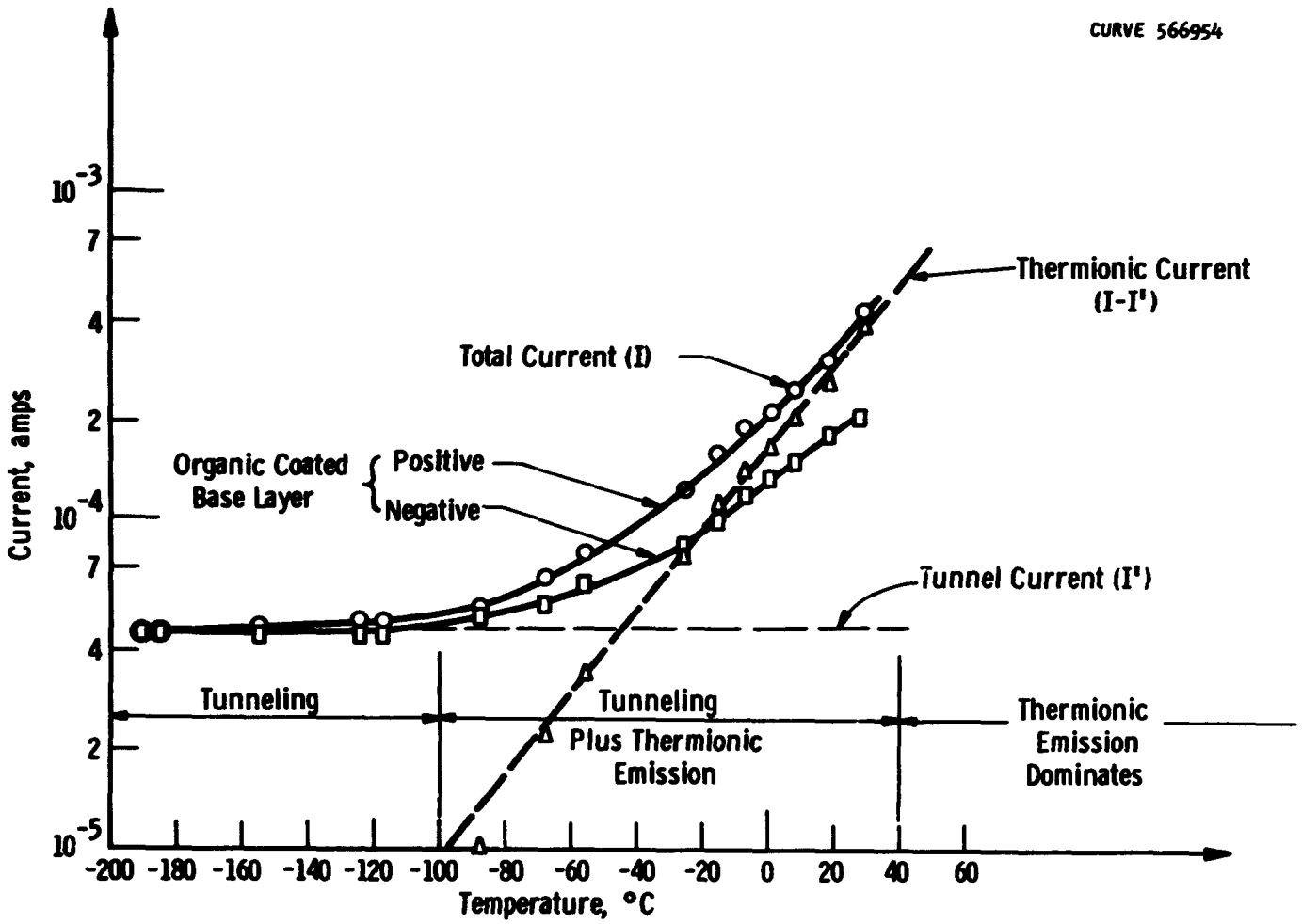

Fig. 7—Temperature dependence of resistance at constant voltage. Current required to develop 0.2 volts across sample as ordinate versus temperature in degrees centigrade as abscissa. (Sample #142, junction No. 5)

CURVE 567043-B

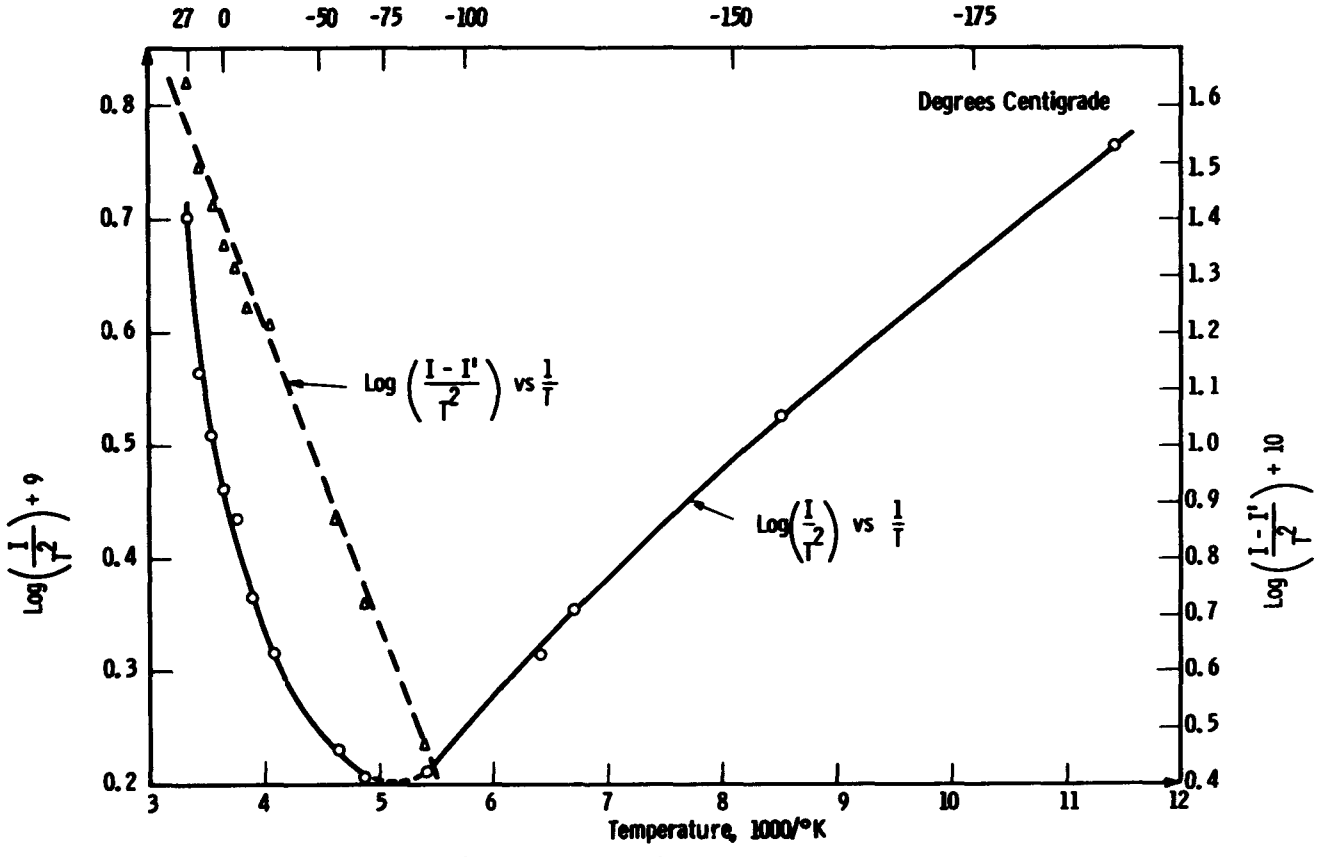

Fig. 8—Plot of log $\left(\frac{I}{T^2}\right)$ versus $\left(\frac{1}{T}\right)$ and log $\left(\frac{I - I'}{T^2}\right)$ versus $\left(\frac{1}{T}\right)$ where I = total current, I' = low temperature current in amperes, and T = absolute temperature. (Sample #142, junction No. 5)

Slide (a.)

Slide (b.)

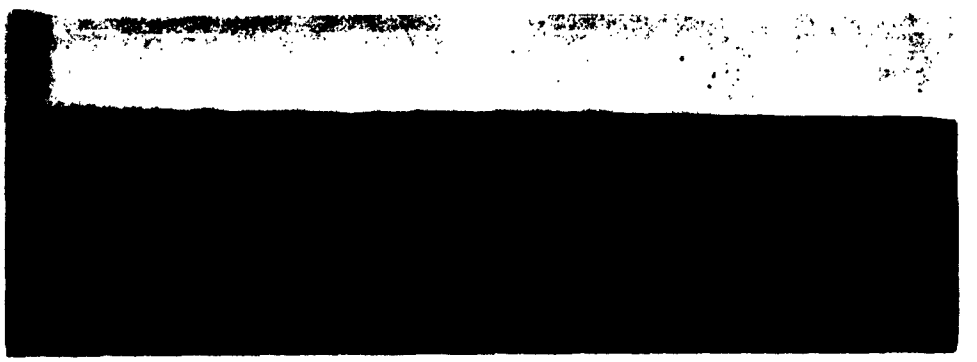

Slide (c.)

Slide (d.)

Fig. 9 - Autoradiographs of radioactive Ba stearate and Ba stearate:PVB mixture mono- and multilayers. From the top: one monolayer of Ba stearate over tin stripe on glass; one monolayer of Ba stearate over tin and copper stripes on glass, showing different contact angles between aqueous subphase and glass or metal; one, three and five monolayer steps of Ba stearate; one, three and five monolayer steps of equiweight mixture of Ba stearate and PVB.

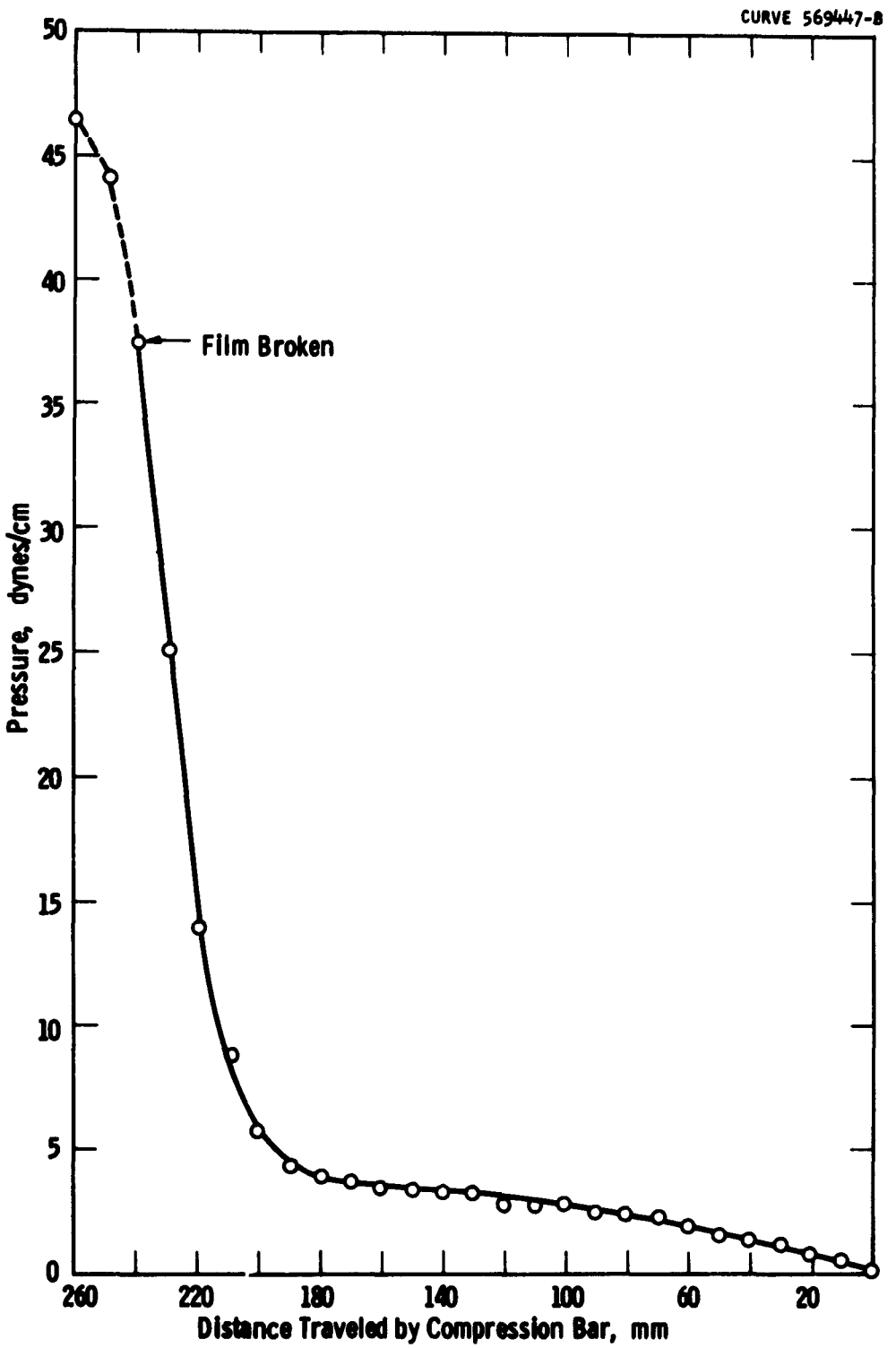

Fig. 10—Pressure/area isotherm for an equiweight mixture of polyvinylbenzoate and stearic acid

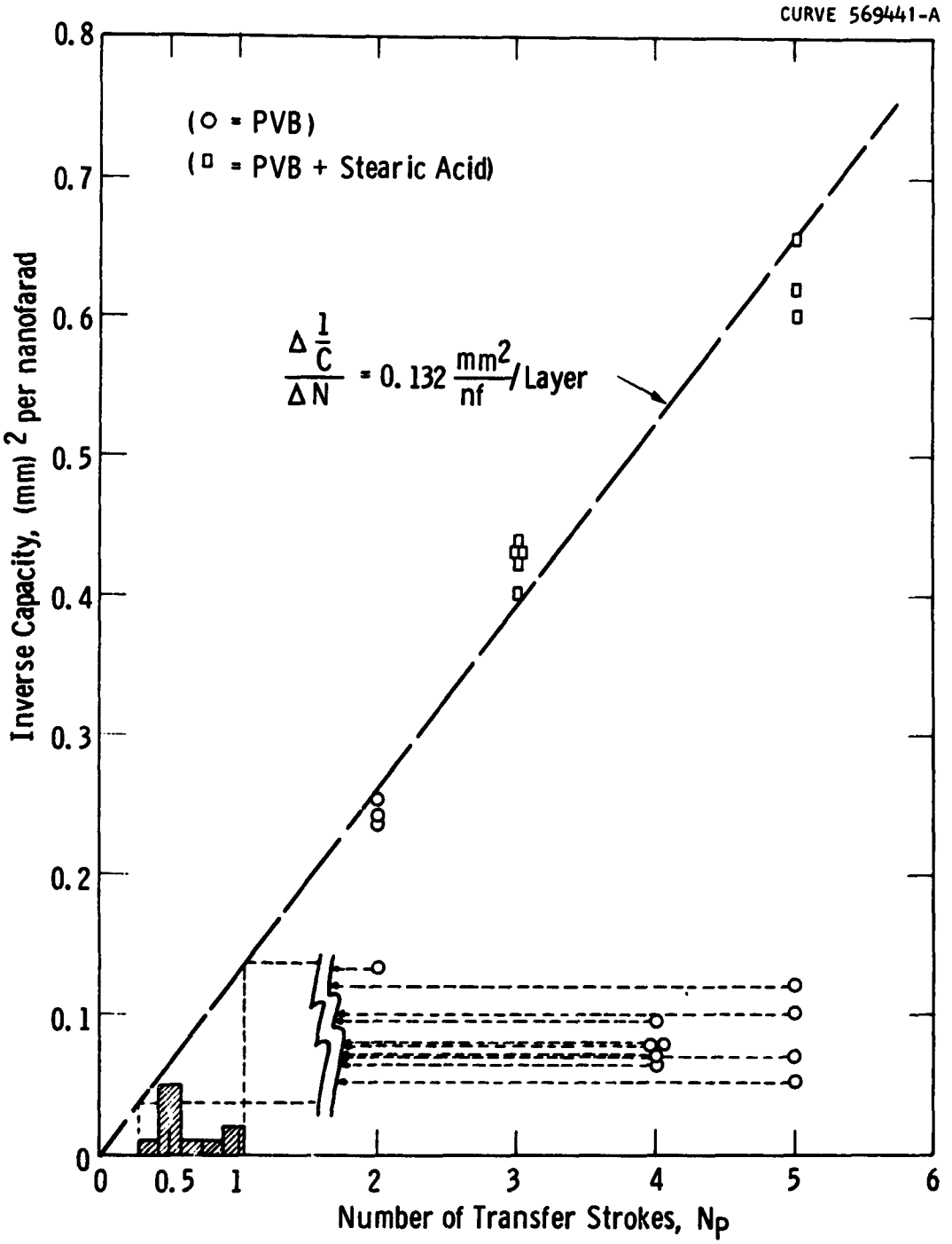

Fig. 11—Reciprocal capacitance vs number of transfer strokes for PVB and PVB-stearic acid films

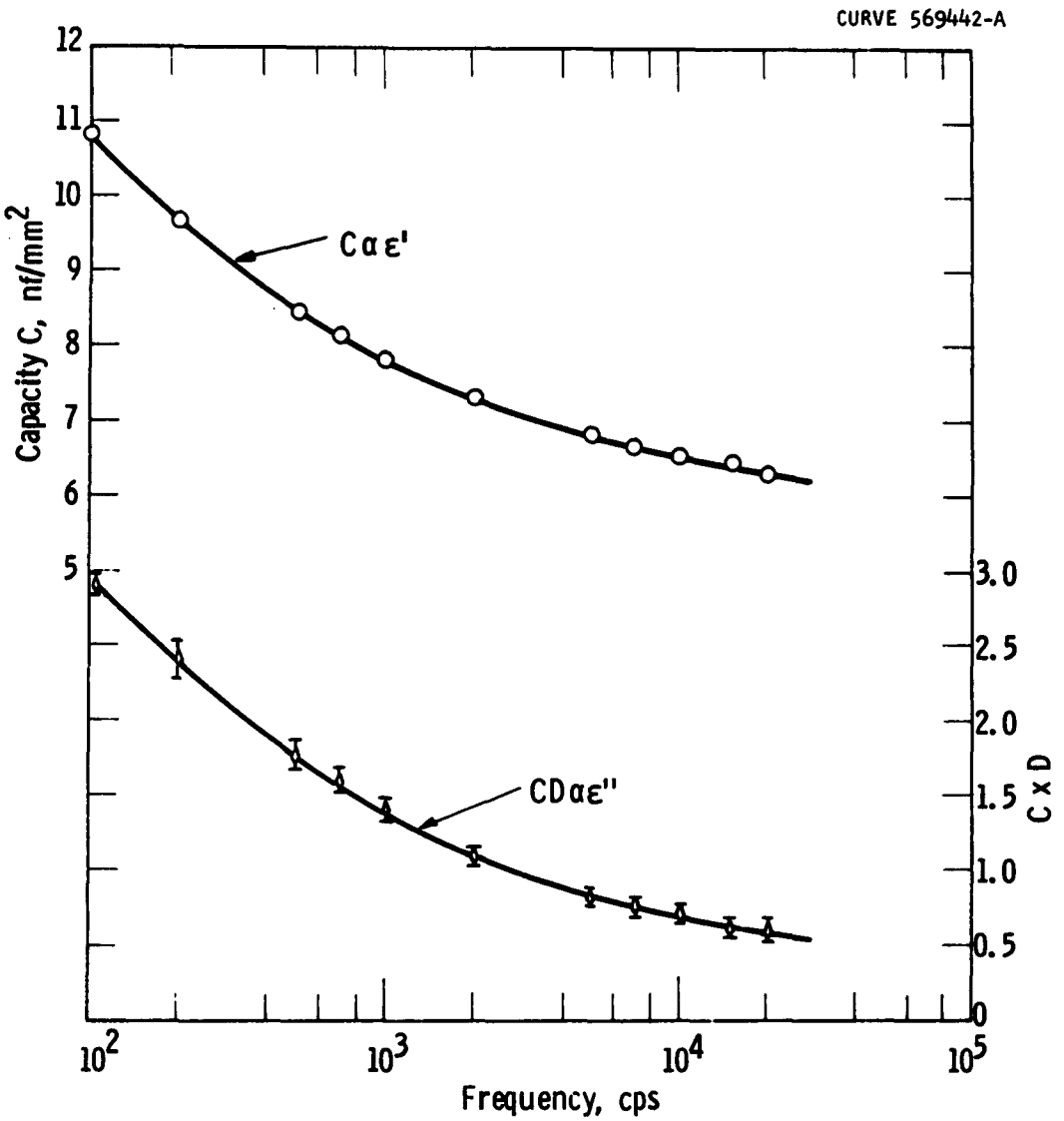

Fig. 12—Capacity and capacity x dissipation factor vs frequency for a PVB sample

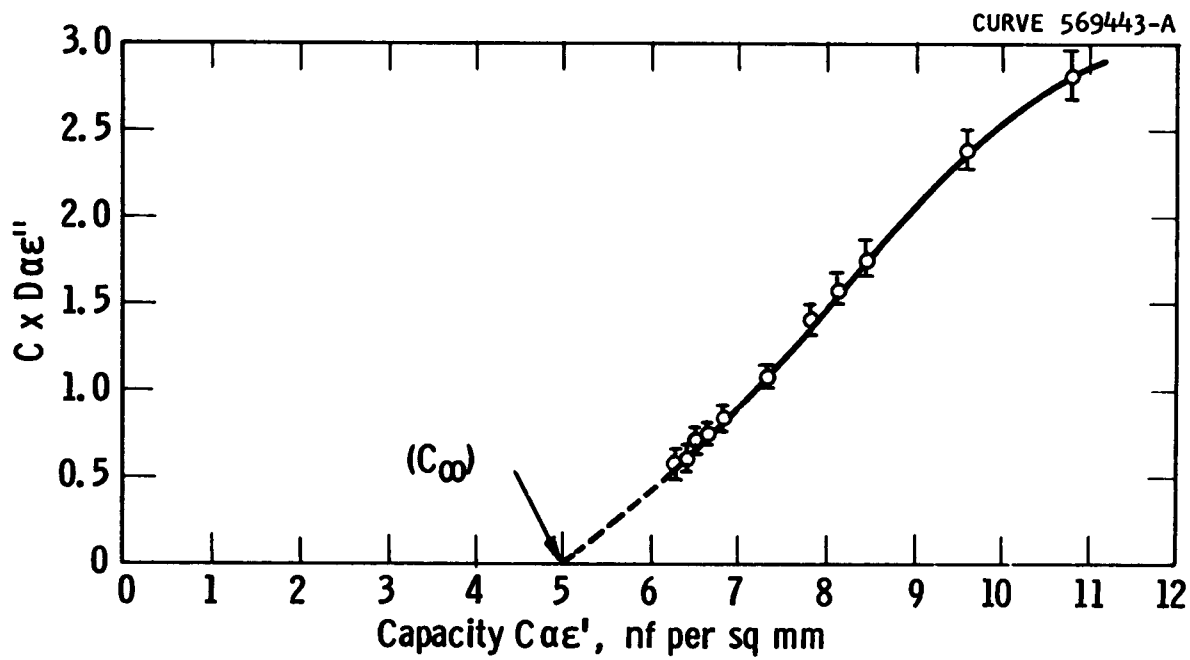

Fig. 13—Extrapolation of CD vs C to obtain C_∞

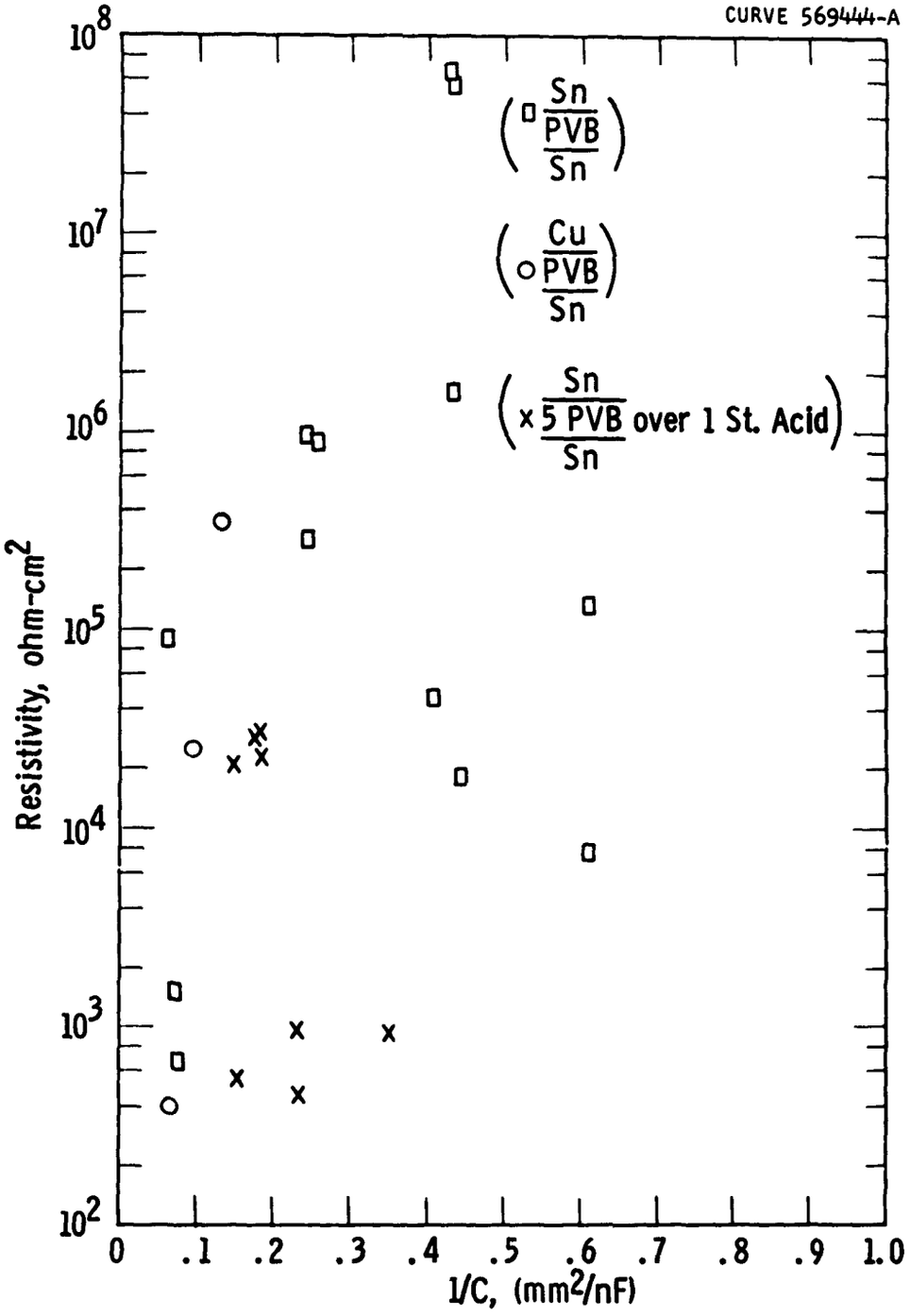

Fig. 14—Low voltage resistivity vs 1/C for PVB and PVB-stearic acid samples

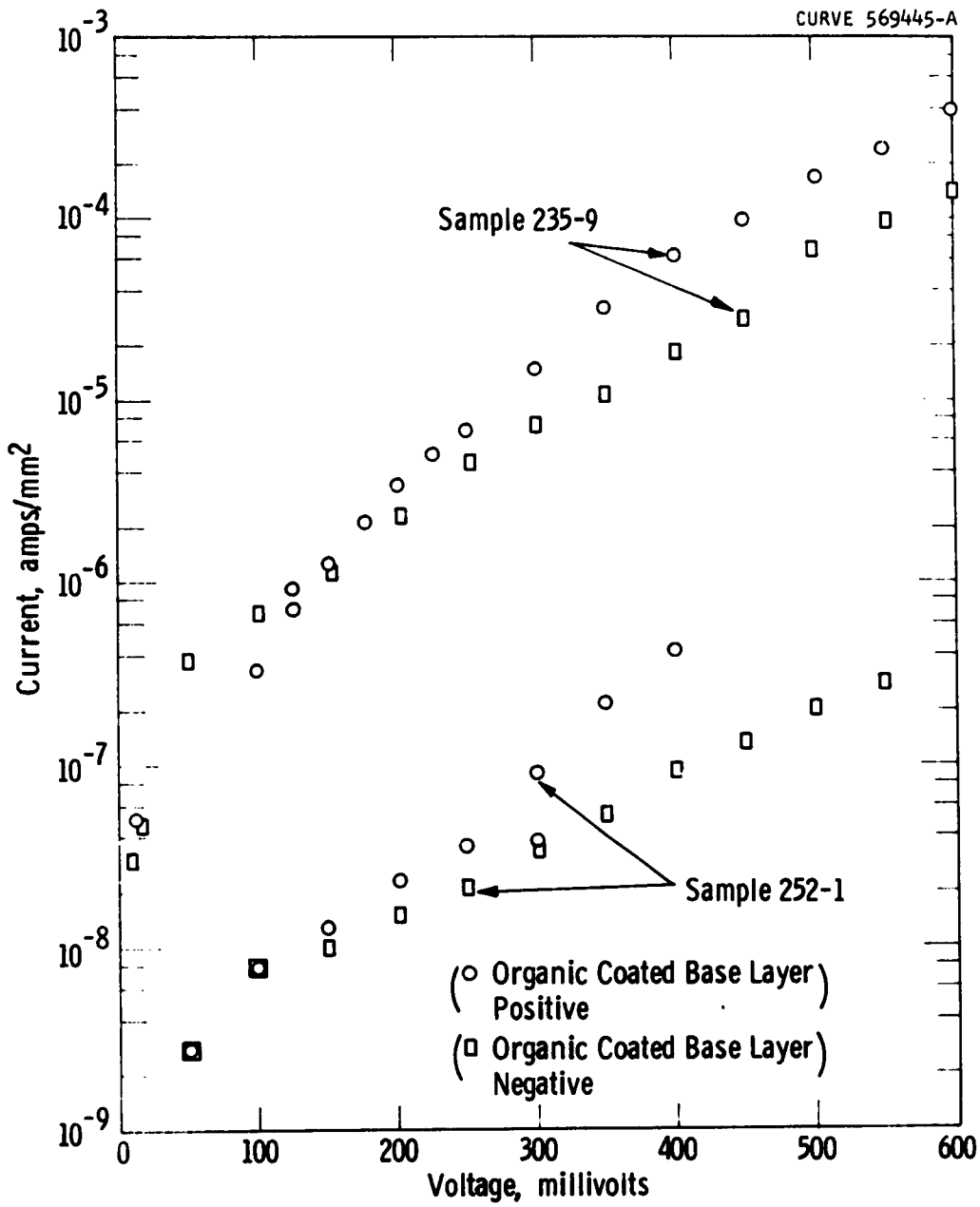

Fig. 15—V-I Characteristics for PVB films (T = 300°K)

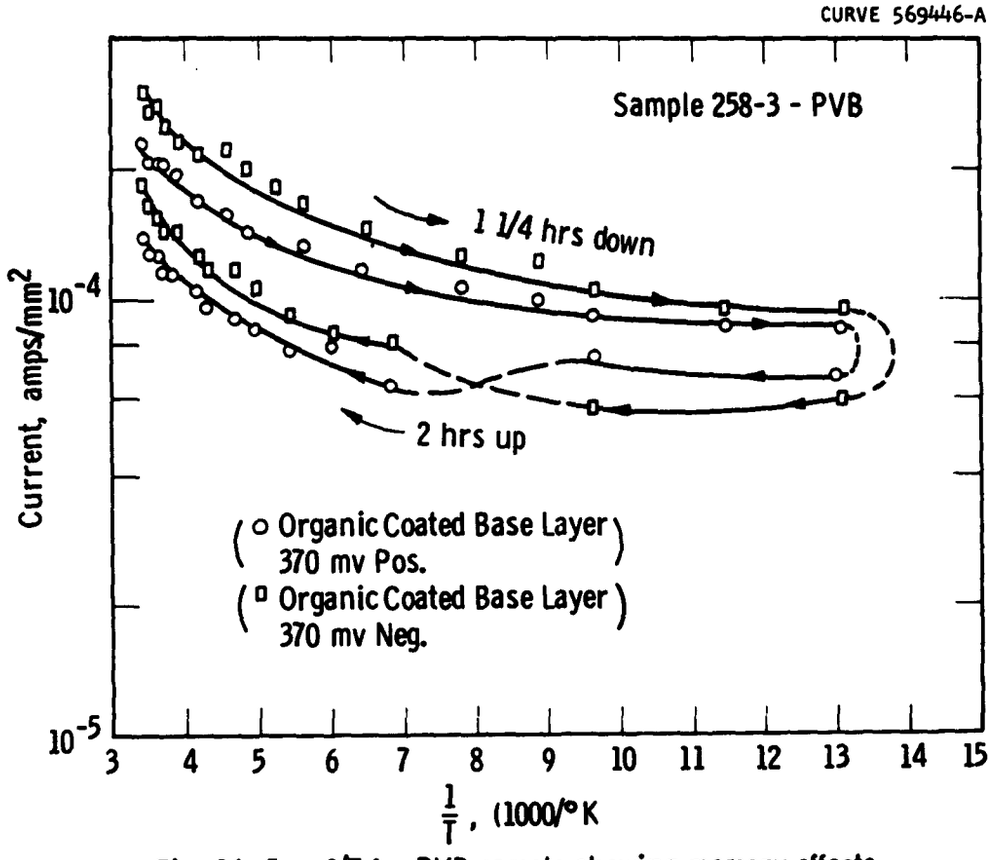

Fig. 16—I vs 1/T for PVB sample showing memory effects

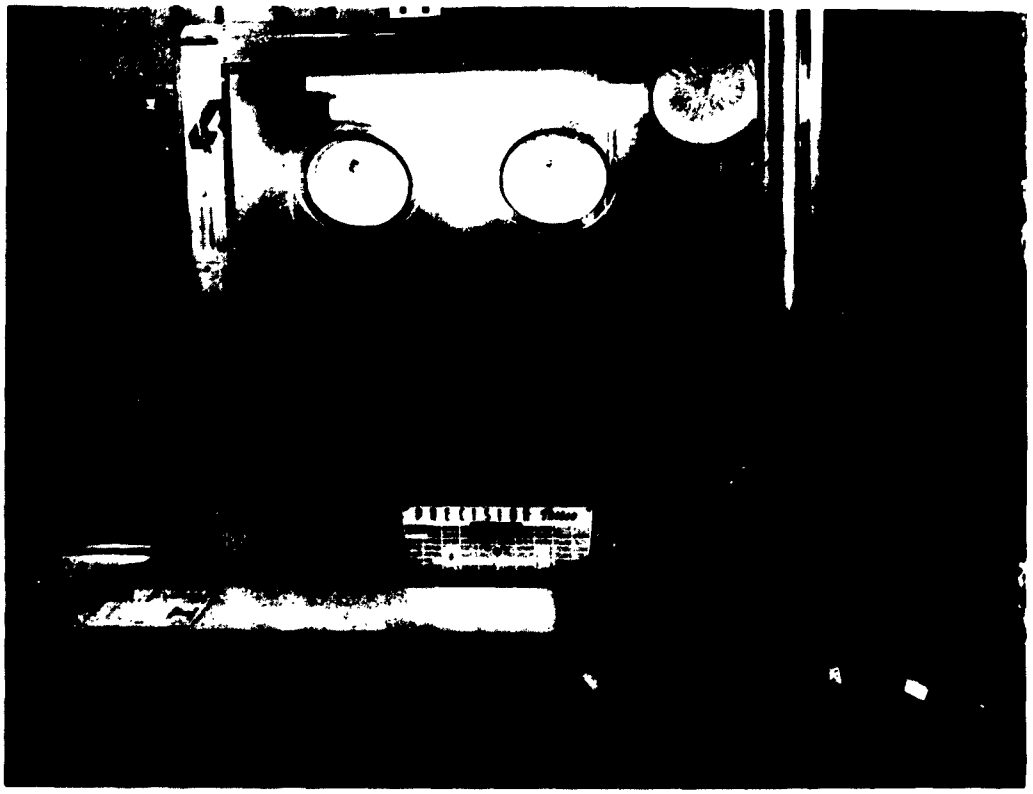

Fig. 17—Langmuir film apparatus overall view

CLM 29827

116C897

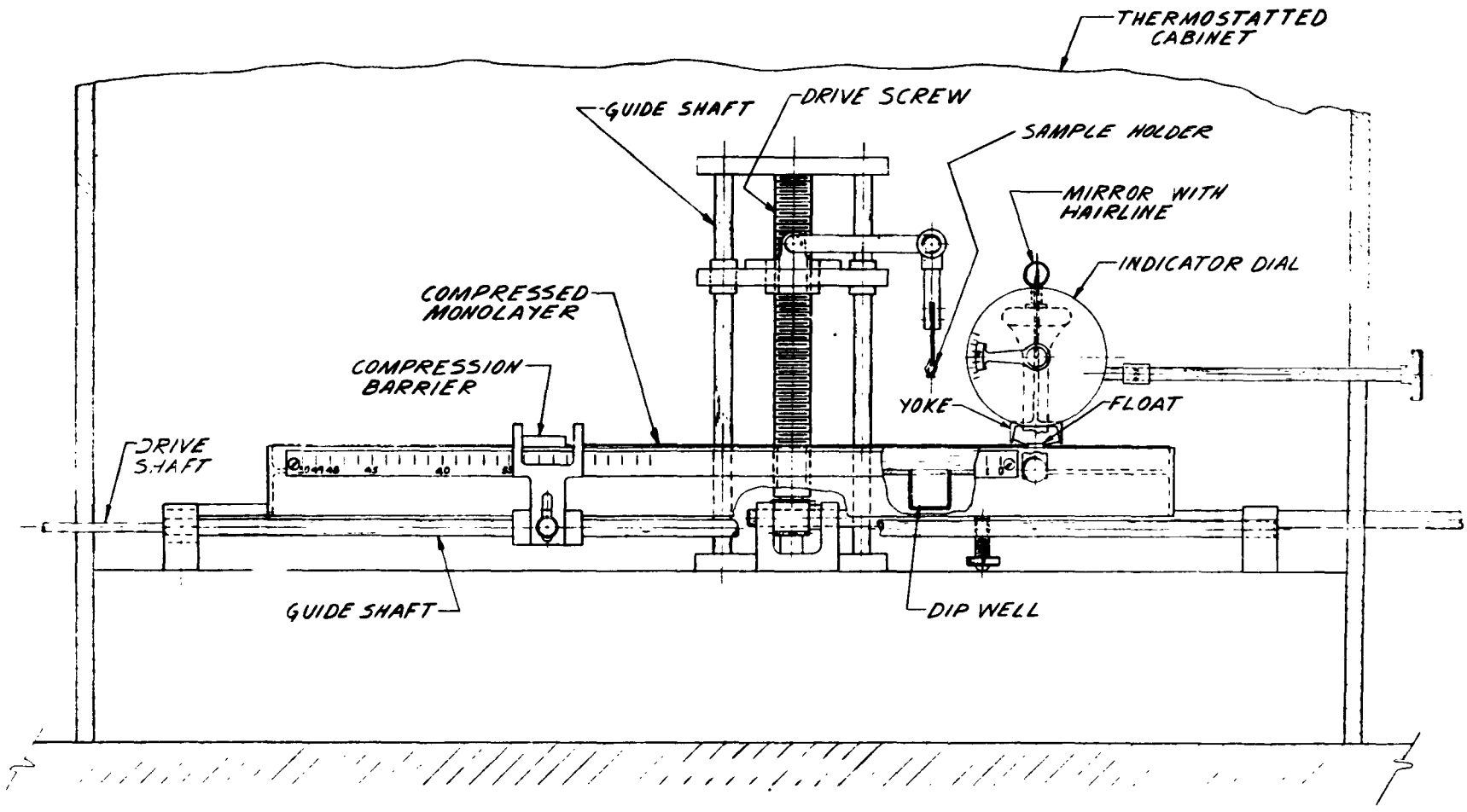

Fig. 18—Film balance assembly, front view

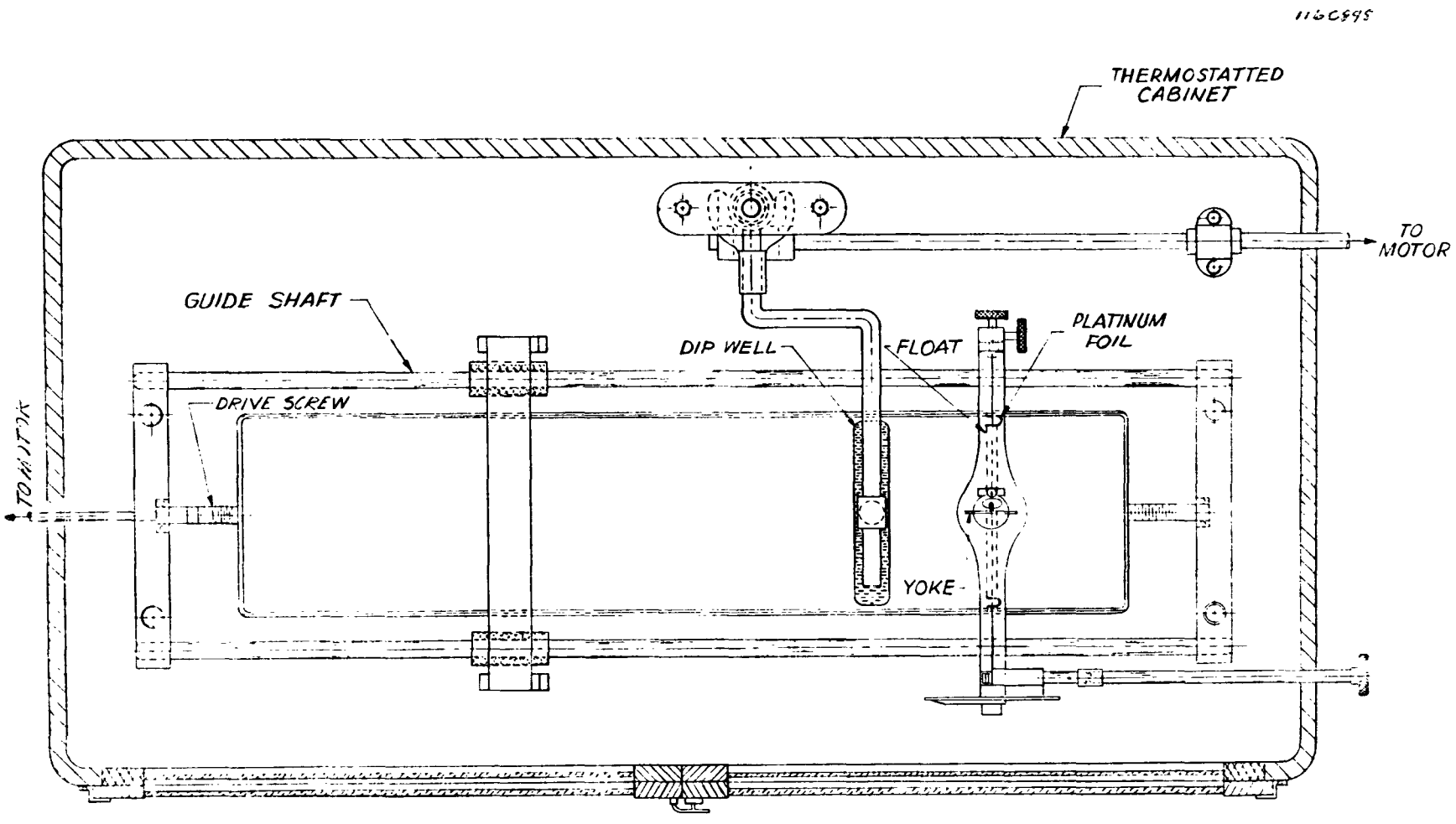

Fig. 19—Film balance assembly, top view

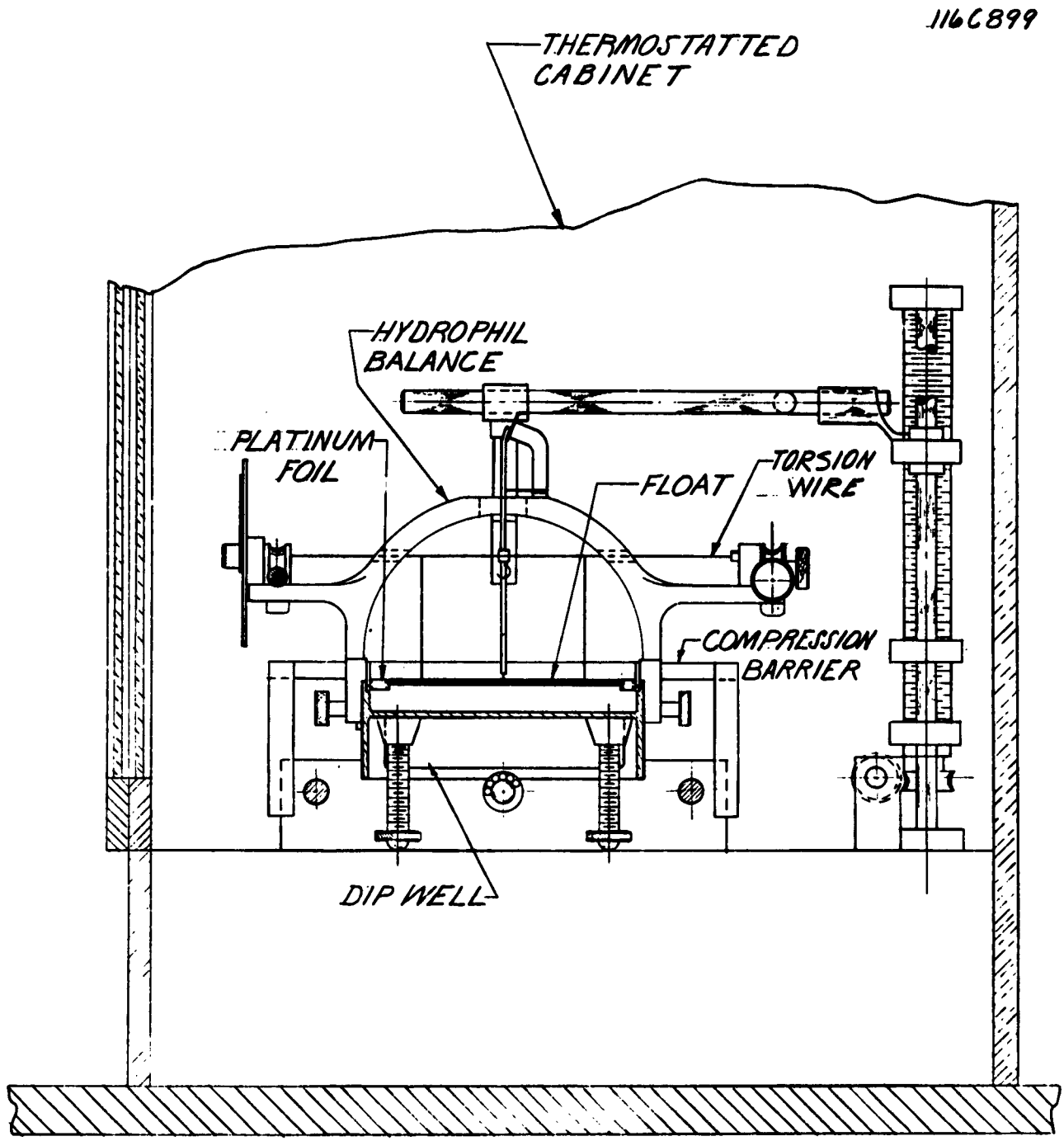

Fig. 20—Film balance assembly, end view

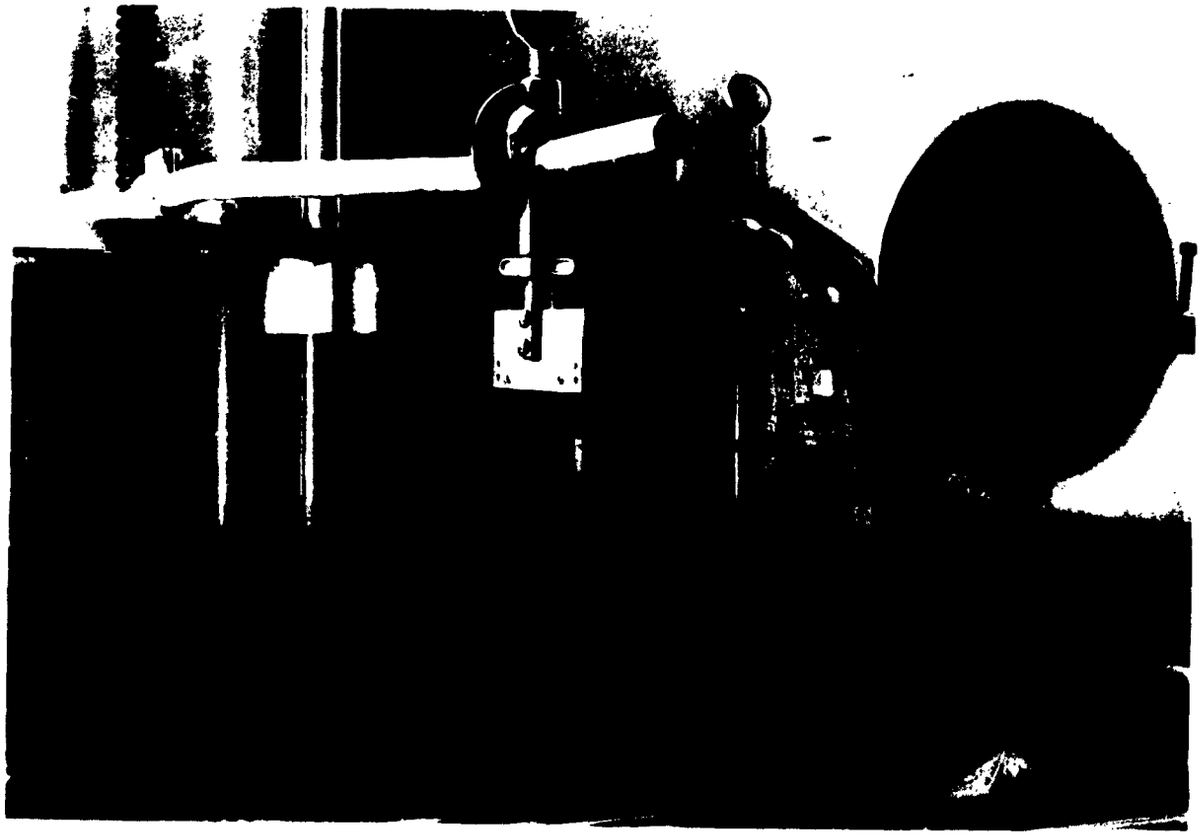

Fig. 21 Photograph of Langmuir trough and film balance showing monolayer film being transferred onto sample. The sample is a 1" x 3" glass slide on which electrodes have been formed by vacuum evaporation.

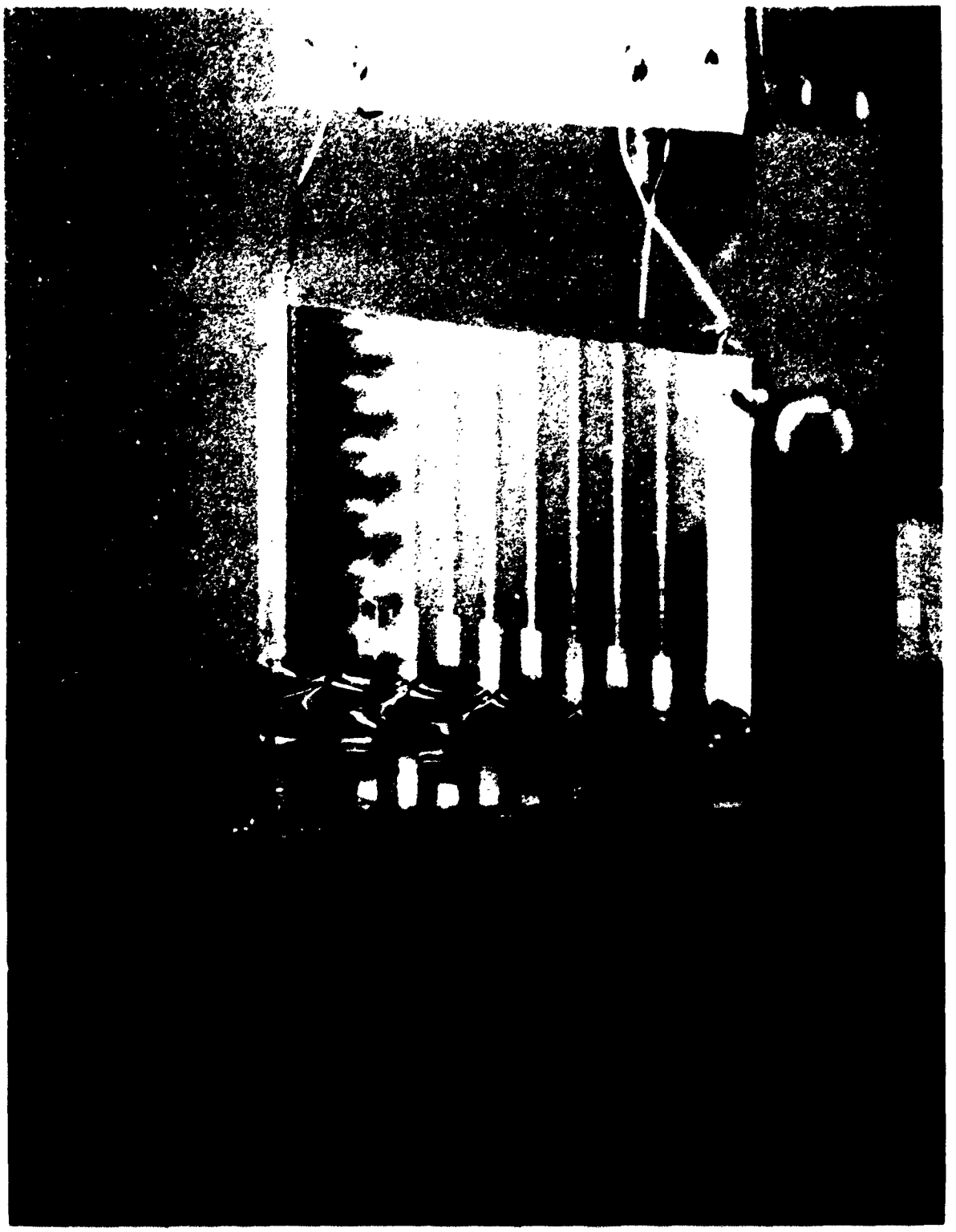

Fig. 22 Enlargement of the central portion of Fig. 1 showing the electrode arrangement on the sample and the meniscus formed with the surface of the Langmuir bath. There are 9 narrow electrodes and 2 wide end pads running parallel with the narrow dimension of the slide. The 1st, 3rd, 5th, 7th, and 9th electrodes are gold. The remainder and the end pads are tin.

CLM 27066

DWG. 627A572

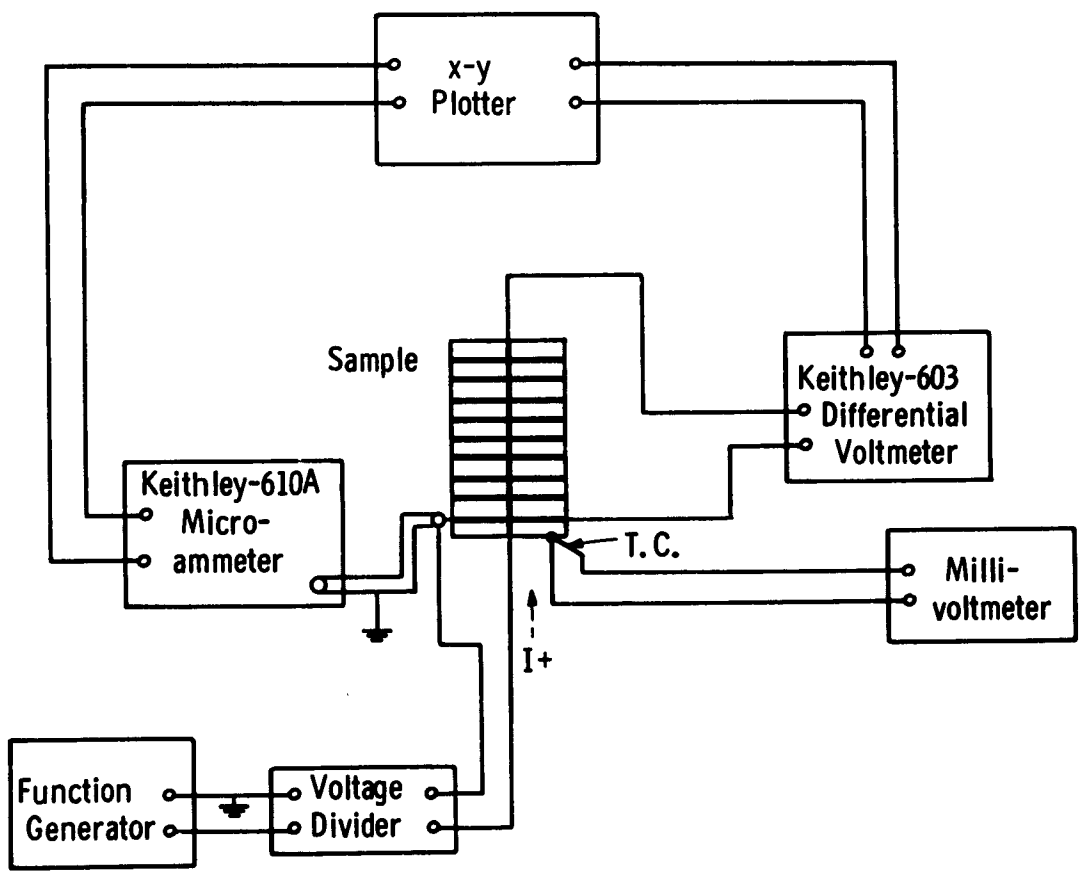

Fig. 23—Circuit used for measuring I-V characteristics

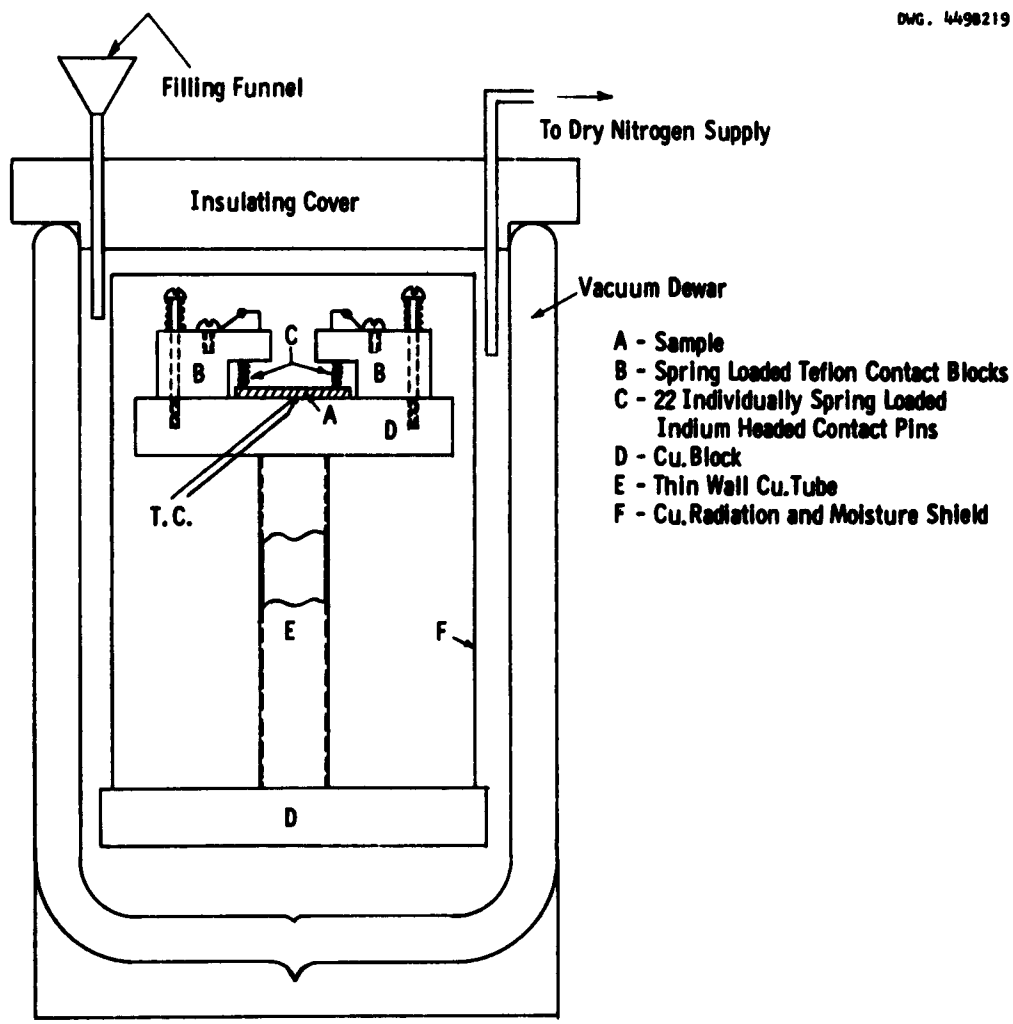

Fig. 24—Variable temperature sample holder used for I-V measurements

Distribution List

	No. of Copies
OASD (R and E), Rm 3E1065 Attn: Technical Library The Pentagon Washington 25, D.C.	1
Chief of Research and Development OCS, Department of the Army Washington 25, D. C.	1
Commanding Officer U.S. Army Electronics Command Attn: AMSEL-AD Fort Monmouth, New Jersey 07703	3
Director U.S. Naval Research Laboratory Attn: Code 2027 Washington, D.C. 20390	1
Commanding Officer and Director U.S. Navy Electronics Laboratory San Diego, California 92152	1
Commander Aeronautical Systems Division Attn: ASNXRR Wright-Patterson Air Force Base, Ohio 45433	1
Commander Air Force Cambridge Research Laboratories Attn: CRXL-R L. G. Hanscom Field Bedford, Massachusetts	1
Commander Air Force Cambridge Research Laboratories Attn: CRZC L. G. Hanscom Field Bedford, Massachusetts	1
Commander Rome Air Development Center Attn: RAALD Griffiss Air Force Base, New York	1

DA 36-039 AMC-00072

	No. of Copies
Commanding General U.S. Army Material Command Attn: R and D Directorate Washington, D.C. 20315	1
Fort Huachuca, Arizona	1
Commander Defense Documentation Center Attn: TISIA Cameron Station, Building 5 Alexandria, Virginia 22314	10
Chief U.S. Army Security Agency Arlington Hall Station Arlington 12, Virginia	2
Deputy President U.S. Army Security Agency Board Arlington Hall Station Arlington 12, Virginia	1
Commanding Officer Harry Diamond Laboratories Connecticut Avenue and Van Ness Street, N.W. Washington 25, D.C.	1
Commanding Officer U.S. Army Electronics Material Support Agency Attn: SELMS-ADJ Fort Monmouth, New Jersey 07703	1
Director, USAEGIMRADA Attn: ENGGM-SS Fort Belvoir, Virginia	1
AFSC Scientific/Technical Liaison Office U.S. Naval Air Development Center Johnsville, Pennsylvania	1
Advisory Group on Electron Devices 346 Broadway, 8th Floor New York, New York 10013	1
Marine Corps. Liaison Office U.S. Army Electronics R and D Laboratory Fort Monmouth, New Jersey 07703	1
Commanding General U.S. Army Combat Developments Command Attn: CDCMR-E Fort Belvoir, Virginia	1

	No. of Copies
Headquarters Electronic Systems Division Attn: ESAT L. G. Hanscom Field Bedford, Massachusetts	1
Director U.S. Army Engineer R and D Laboratories Attn: Tech Document Center Fort Belvoir, Virginia	1
Commander Aeronautical Systems Division Attn: ASRNDM-1 (Mrs. E. Tarrants) Wright-Patterson AFB, Ohio	1
USAELRDL Liaison Officer U.S. Army Combat Developments Command Attn: CDCLN-EL Fort Belvoir, Virginia	1
Chief Scientist U.S. Army Electronics Command Fort Monmouth, New Jersey 07703	1
Lear Sigler Attn: Dr. J. Axelrod 3171 South Bundy Drive Santa Monica, California	1
Office of Naval Research Code 463 Department of the Navy Washington 25, D.C.	1
Mr. A. H. Young Code 681AIA Semiconductor Group Bureau of Ships Department of the Navy Washington 25, D.C.	1
Commanding Officer U.S. Army Electronic Material Agency Attn: SELMA-R2b 225 South 18th Street Philadelphia, Pennsylvania 19103	1

	No of Copies
USAELRDL Liaison Officer Rome Air Development Center Attn: RAOL Griffiss Air Force Base, New York	1
Commanding Officer U.S. Army Electronics R and D Laboratory Fort Monmouth, New Jersey 07703	
Attn: Director of Research/Engineering	1
Attn: Technical Documents Center	1
Attn: Rpts Dist Unit, Solid State and Freq Cont Div (Record cy)	1
Attn: Ch, S and M Br., Solid State and Freq Cont Div	1
Attn: Director, Solid State and Freq Cont Div	1
Attn: S. Epstein, Solid State and Freq Cont Div	11
Total number of copies to be distributed	60

This contract is supervised by the Solid State and Frequency Control Division, Electronic Components Department, USAELRDL, Fort Monmouth, New Jersey. For further technical information contact S. Epstein Project Engineer. Telephone 53-51042.

Westinghouse Electric Corp., Res. and Dev. Lab., Pgh. 35, Pa.
ORGANIC FILM SEMICONDUCTORS AND SENSORS, by T. P. Brady, D. H. Brady, and L. C. Scala, Final Report 1 November, 1959 - 31 October 1963. 37 pages incl. line drawings and photographs. (Contract DA 36-039 SC-89019).

Unclassified Report

This organic insulator films were prepared by an improved Langmuir film technique, by evaporation and by interfacial polycondensation. Barium and calcium stearate, stearic acid, homosteric acid and polyvinyl benzoate (PVB) monolayers were transferred by the Langmuir method, and the electrical properties of these films, sandwiched between evaporated electrodes of various metals, were studied. The mechanism of film deposition and the structure of the resulting monolayers is discussed.

Monolayers could be successfully transferred only onto chemically active substrates, such as Cu or Cu. With these electrodes, the conduction process through mono- and multilayer films could be described in terms of a combined tunneling and Schottky-emission mechanism, with an activation energy of ~0.25 ev. It was established that the underlying metal oxide associated with the electrodes had no effect on the current-voltage characteristics and temperature behavior, except very near the origin, and that monolayer deposition by the Langmuir process is one of considerably difficulty, if completely homogeneous void-free films are required.

X-ray irradiation and autoradiographic studies on films of PVB were also made. Evidence for radiation-induced cross-linkage was obtained for bulk PVB, but results on monolayers were inconclusive.

From a combination of capacity measurements, molecular weight and bond-length considerations it was concluded that the stable "monolayer" of PVB is composed of 3-4 interbonding layers of molecules.

Some interesting memory effects have been observed in sandwiches formed with PVB, which may find application as analog memory elements.

Work on interfacial polycondensation of polyhexamethylene sebacamide indicated a possible approach to monolayer formation. Exploratory study of ultraviolet irradiation of evaporated Parmar and stearic film showed heavy degradation of Parmar. No electrical effects attributed to irradiation have been found.

Experimental procedures used in forming and testing the organic film sandwiches are outlined.

UNCLASSIFIED

1. Organic Thin Films
2. Langmuir Films
3. Monolayer Films
4. Sensorics
5. Polyvinyl Benzoate
6. Preparation
7. Tunneling
8. Schottky
9. Temperature
10. Irradiation
11. Polycondensation
12. V-I Curves
13. Polymerization
14. Evaporation

Westinghouse Electric Corp., Res. and Dev. Lab., Pgh. 35, Pa.
ORGANIC FILM SEMICONDUCTORS AND SENSORS, by T. P. Brady, D. H. Brady, and L. C. Scala, Final Report 1 November, 1959 - 31 October 1963. 37 pages incl. line drawings and photographs. (Contract DA 36-039 SC-89019).

Unclassified Report

This organic insulator films were prepared by an improved Langmuir film technique, by evaporation and by interfacial polycondensation. Barium and calcium stearate, stearic acid, homosteric acid and polyvinyl benzoate (PVB) monolayers were transferred by the Langmuir method, and the electrical properties of these films, sandwiched between evaporated electrodes of various metals, were studied. The mechanism of film deposition and the structure of the resulting monolayers is discussed.

Monolayers could be successfully transferred only onto chemically active substrates, such as Cu or Cu. With these electrodes, the conduction process through mono- and multilayer films could be described in terms of a combined tunneling and Schottky-emission mechanism, with an activation energy of ~0.25 ev. It was established that the underlying metal oxide associated with the electrodes had no effect on the current-voltage characteristics and temperature behavior, except very near the origin, and that monolayer deposition by the Langmuir process is one of considerably difficulty, if completely homogeneous void-free films are required.

X-ray irradiation and autoradiographic studies on films of PVB were also made. Evidence for radiation-induced cross-linkage was obtained for bulk PVB, but results on monolayers were inconclusive.

From a combination of capacity measurements, molecular weight and bond-length considerations it was concluded that the stable "monolayer" of PVB is composed of 3-4 interbonding layers of molecules.

Some interesting memory effects have been observed in sandwiches formed with PVB, which may find application as analog memory elements.

Work on interfacial polycondensation of polyhexamethylene sebacamide indicated a possible approach to monolayer formation. Exploratory study of ultraviolet irradiation of evaporated Parmar and stearic film showed heavy degradation of Parmar. No electrical effects attributed to irradiation have been found.

Experimental procedures used in forming and testing the organic film sandwiches are outlined.

UNCLASSIFIED

1. Organic Thin Films
2. Langmuir Films
3. Monolayer Films
4. Sensorics
5. Polyvinyl Benzoate
6. Preparation
7. Tunneling
8. Schottky
9. Temperature
10. Irradiation
11. Polycondensation
12. V-I Curves
13. Polymerization
14. Evaporation

Westinghouse Electric Corp., Res. and Dev. Lab., Pgh. 35, Pa.
ORGANIC FILM SEMICONDUCTORS AND SENSORS, by T. P. Brady, D. H. Brady, and L. C. Scala, Final Report 1 November, 1959 - 31 October 1963. 37 pages incl. line drawings and photographs. (Contract DA 36-039 SC-89019).

Unclassified Report

This organic insulator films were prepared by an improved Langmuir film technique, by evaporation and by interfacial polycondensation. Barium and calcium stearate, stearic acid, homosteric acid and polyvinyl benzoate (PVB) monolayers were transferred by the Langmuir method, and the electrical properties of these films, sandwiched between evaporated electrodes of various metals, were studied. The mechanism of film deposition and the structure of the resulting monolayers is discussed.

Monolayers could be successfully transferred only onto chemically active substrates, such as Cu or Cu. With these electrodes, the conduction process through mono- and multilayer films could be described in terms of a combined tunneling and Schottky-emission mechanism, with an activation energy of ~0.25 ev. It was established that the underlying metal oxide associated with the electrodes had no effect on the current-voltage characteristics and temperature behavior, except very near the origin, and that monolayer deposition by the Langmuir process is one of considerably difficulty, if completely homogeneous void-free films are required.

X-ray irradiation and autoradiographic studies on films of PVB were also made. Evidence for radiation-induced cross-linkage was obtained for bulk PVB, but results on monolayers were inconclusive.

From a combination of capacity measurements, molecular weight and bond-length considerations it was concluded that the stable "monolayer" of PVB is composed of 3-4 interbonding layers of molecules.

Some interesting memory effects have been observed in sandwiches formed with PVB, which may find application as analog memory elements.

Work on interfacial polycondensation of polyhexamethylene sebacamide indicated a possible approach to monolayer formation. Exploratory study of ultraviolet irradiation of evaporated Parmar and stearic film showed heavy degradation of Parmar. No electrical effects attributed to irradiation have been found.

Experimental procedures used in forming and testing the organic film sandwiches are outlined.

UNCLASSIFIED

1. Organic Thin Films
2. Langmuir Films
3. Monolayer Films
4. Sensorics
5. Polyvinyl Benzoate
6. Preparation
7. Tunneling
8. Schottky
9. Temperature
10. Irradiation
11. Polycondensation
12. V-I Curves
13. Polymerization
14. Evaporation

Westinghouse Electric Corp., Res. and Dev. Lab., Pgh. 35, Pa.
ORGANIC FILM SEMICONDUCTORS AND SENSORS, by T. P. Brady, D. H. Brady, and L. C. Scala, Final Report 1 November, 1959 - 31 October 1963. 37 pages incl. line drawings and photographs. (Contract DA 36-039 SC-89019).

Unclassified Report

This organic insulator films were prepared by an improved Langmuir film technique, by evaporation and by interfacial polycondensation. Barium and calcium stearate, stearic acid, homosteric acid and polyvinyl benzoate (PVB) monolayers were transferred by the Langmuir method, and the electrical properties of these films, sandwiched between evaporated electrodes of various metals, were studied. The mechanism of film deposition and the structure of the resulting monolayers is discussed.

Monolayers could be successfully transferred only onto chemically active substrates, such as Cu or Cu. With these electrodes, the conduction process through mono- and multilayer films could be described in terms of a combined tunneling and Schottky-emission mechanism, with an activation energy of ~0.25 ev. It was established that the underlying metal oxide associated with the electrodes had no effect on the current-voltage characteristics and temperature behavior, except very near the origin, and that monolayer deposition by the Langmuir process is one of considerably difficulty, if completely homogeneous void-free films are required.

X-ray irradiation and autoradiographic studies on films of PVB were also made. Evidence for radiation-induced cross-linkage was obtained for bulk PVB, but results on monolayers were inconclusive.

From a combination of capacity measurements, molecular weight and bond-length considerations it was concluded that the stable "monolayer" of PVB is composed of 3-4 interbonding layers of molecules.

Some interesting memory effects have been observed in sandwiches formed with PVB, which may find application as analog memory elements.

Work on interfacial polycondensation of polyhexamethylene sebacamide indicated a possible approach to monolayer formation. Exploratory study of ultraviolet irradiation of evaporated Parmar and stearic film showed heavy degradation of Parmar. No electrical effects attributed to irradiation have been found.

Experimental procedures used in forming and testing the organic film sandwiches are outlined.

UNCLASSIFIED

1. Organic Thin Films
2. Langmuir Films
3. Monolayer Films
4. Sensorics
5. Polyvinyl Benzoate
6. Preparation
7. Tunneling
8. Schottky
9. Temperature
10. Irradiation
11. Polycondensation
12. V-I Curves
13. Polymerization
14. Evaporation

Westinghouse Electric Corp., Res. and Dev. Lab., Pgh. 35, Pa.
ORGANIC FILM TUNNELING EFFECTS AND DEVICES, by T. P. Brady, S. H. Handy, and L. C. Scala, Final Report 1 November, 1962 - 31 October 1963. 37 pages incl. line drawings and photographs. (Contract DA 36-039 SMC-00072).

Unclassified Report

Thin organic insulator films were prepared by an improved Langmuir film technique, by evaporation and by interfacial polycondensation. Barium and calcium stearate, stearic acid, hexacosanoic acid and polyvinyl benzoate (PVB) monolayers were transferred by the Langmuir method, and the electrical properties of these films, sandwiched between evaporated electrodes of various metals, were studied. The mechanisms of film deposition and the structure of the resulting monolayers is discussed.

Monolayers could be successfully transferred only onto chemically active substrates, such as Sn or Cu. With these electrodes, the conduction process through mono- and multilayer films could be described in terms of a combined tunneling and Schottky-emission mechanism, with an activation energy of ~0.25 ev. It was established that the underlying metal oxide associated with the electrodes had no effect on the current-voltage characteristics and temperature behavior, except very near the origin, and that monolayer deposition by the Langmuir process is one of considerably difficulty, if completely homogeneous void-free films are required.

γ-ray irradiation and autoradiographic studies on films of PVB were also made. Evidence for radiation-induced cross-linkage was obtained for bulk PVB, but results on monolayers were inconclusive.

From a combination of capacity measurements, molecular weight and bond-length considerations it was concluded that the stable "monolayer" of PVB is composed of 3-4 interbonding layers of molecules.

Some interesting memory effects have been observed in sandwiches formed with PVB, which may find application as analog memory elements.

Work on interfacial polycondensation of polymethylene sebacamide indicated a possible approach to monolayer formation. Exploratory study of ultraviolet irradiation of evaporated Formvar and styrene film showed heavy degradation of Formvar. No electrical effects attributed to irradiation have been found.

Experimental procedures used in forming and testing the organic film sandwiches are outlined.

UNCLASSIFIED

1. Organic Thin Films
2. Langmuir Films
3. Monolayer Films
4. Stearates
5. Polyvinyl Benzoate
6. Preparation
7. Tunneling
8. Schottky
9. Temperature
10. Irradiation
11. Polymerization
12. V-I Curves
13. Polycondensation
14. Evaporation

Westinghouse Electric Corp., Res. and Dev. Lab., Pgh. 35, Pa.
ORGANIC FILM TUNNELING EFFECTS AND DEVICES, by T. P. Brady, S. H. Handy, and L. C. Scala, Final Report 1 November, 1962 - 31 October 1963. 37 pages incl. line drawings and photographs. (Contract DA 36-039 SMC-00072).

Unclassified Report

Thin organic insulator films were prepared by an improved Langmuir film technique, by evaporation and by interfacial polycondensation. Barium and calcium stearate, stearic acid, hexacosanoic acid and polyvinyl benzoate (PVB) monolayers were transferred by the Langmuir method, and the electrical properties of these films, sandwiched between evaporated electrodes of various metals, were studied. The mechanisms of film deposition and the structure of the resulting monolayers is discussed.

Monolayers could be successfully transferred only onto chemically active substrates, such as Sn or Cu. With these electrodes, the conduction process through mono- and multilayer films could be described in terms of a combined tunneling and Schottky-emission mechanism, with an activation energy of ~0.25 ev. It was established that the underlying metal oxide associated with the electrodes had no effect on the current-voltage characteristics and temperature behavior, except very near the origin, and that monolayer deposition by the Langmuir process is one of considerably difficulty, if completely homogeneous void-free films are required.

γ-ray irradiation and autoradiographic studies on films of PVB were also made. Evidence for radiation-induced cross-linkage was obtained for bulk PVB, but results on monolayers were inconclusive.

From a combination of capacity measurements, molecular weight and bond-length considerations it was concluded that the stable "monolayer" of PVB is composed of 3-4 interbonding layers of molecules.

Some interesting memory effects have been observed in sandwiches formed with PVB, which may find application as analog memory elements.

Work on interfacial polycondensation of polymethylene sebacamide indicated a possible approach to monolayer formation. Exploratory study of ultraviolet irradiation of evaporated Formvar and styrene film showed heavy degradation of Formvar. No electrical effects attributed to irradiation have been found.

Experimental procedures used in forming and testing the organic film sandwiches are outlined.

UNCLASSIFIED

1. Organic Thin Films
2. Langmuir Films
3. Monolayer Films
4. Stearates
5. Polyvinyl Benzoate
6. Preparation
7. Tunneling
8. Schottky
9. Temperature
10. Irradiation
11. Polymerization
12. V-I Curves
13. Polycondensation
14. Evaporation

Westinghouse Electric Corp., Res. and Dev. Lab., Pgh. 35, Pa.
ORGANIC FILM TUNNELING EFFECTS AND DEVICES, by T. P. Brady, S. H. Handy, and L. C. Scala, Final Report 1 November, 1962 - 31 October 1963. 37 pages incl. line drawings and photographs. (Contract DA 36-039 SMC-00072).

Unclassified Report

Thin organic insulator films were prepared by an improved Langmuir film technique, by evaporation and by interfacial polycondensation. Barium and calcium stearate, stearic acid, hexacosanoic acid and polyvinyl benzoate (PVB) monolayers were transferred by the Langmuir method, and the electrical properties of these films, sandwiched between evaporated electrodes of various metals, were studied. The mechanisms of film deposition and the structure of the resulting monolayers is discussed.

Monolayers could be successfully transferred only onto chemically active substrates, such as Sn or Cu. With these electrodes, the conduction process through mono- and multilayer films could be described in terms of a combined tunneling and Schottky-emission mechanism, with an activation energy of ~0.25 ev. It was established that the underlying metal oxide associated with the electrodes had no effect on the current-voltage characteristics and temperature behavior, except very near the origin, and that monolayer deposition by the Langmuir process is one of considerably difficulty, if completely homogeneous void-free films are required.

γ-ray irradiation and autoradiographic studies on films of PVB were also made. Evidence for radiation-induced cross-linkage was obtained for bulk PVB, but results on monolayers were inconclusive.

From a combination of capacity measurements, molecular weight and bond-length considerations it was concluded that the stable "monolayer" of PVB is composed of 3-4 interbonding layers of molecules.

Some interesting memory effects have been observed in sandwiches formed with PVB, which may find application as analog memory elements.

Work on interfacial polycondensation of polymethylene sebacamide indicated a possible approach to monolayer formation. Exploratory study of ultraviolet irradiation of evaporated Formvar and styrene film showed heavy degradation of Formvar. No electrical effects attributed to irradiation have been found.

Experimental procedures used in forming and testing the organic film sandwiches are outlined.

UNCLASSIFIED

1. Organic Thin Films
2. Langmuir Films
3. Monolayer Films
4. Stearates
5. Polyvinyl Benzoate
6. Preparation
7. Tunneling
8. Schottky
9. Temperature
10. Irradiation
11. Polymerization
12. V-I Curves
13. Polycondensation
14. Evaporation

Westinghouse Electric Corp., Res. and Dev. Lab., Pgh. 35, Pa.
ORGANIC FILM TUNNELING EFFECTS AND DEVICES, by T. P. Brady, S. H. Handy, and L. C. Scala, Final Report 1 November, 1962 - 31 October 1963. 37 pages incl. line drawings and photographs. (Contract DA 36-039 SMC-00072).

Unclassified Report

Thin organic insulator films were prepared by an improved Langmuir film technique, by evaporation and by interfacial polycondensation. Barium and calcium stearate, stearic acid, hexacosanoic acid and polyvinyl benzoate (PVB) monolayers were transferred by the Langmuir method, and the electrical properties of these films, sandwiched between evaporated electrodes of various metals, were studied. The mechanisms of film deposition and the structure of the resulting monolayers is discussed.

Monolayers could be successfully transferred only onto chemically active substrates, such as Sn or Cu. With these electrodes, the conduction process through mono- and multilayer films could be described in terms of a combined tunneling and Schottky-emission mechanism, with an activation energy of ~0.25 ev. It was established that the underlying metal oxide associated with the electrodes had no effect on the current-voltage characteristics and temperature behavior, except very near the origin, and that monolayer deposition by the Langmuir process is one of considerably difficulty, if completely homogeneous void-free films are required.

γ-ray irradiation and autoradiographic studies on films of PVB were also made. Evidence for radiation-induced cross-linkage was obtained for bulk PVB, but results on monolayers were inconclusive.

From a combination of capacity measurements, molecular weight and bond-length considerations it was concluded that the stable "monolayer" of PVB is composed of 3-4 interbonding layers of molecules.

Some interesting memory effects have been observed in sandwiches formed with PVB, which may find application as analog memory elements.

Work on interfacial polycondensation of polymethylene sebacamide indicated a possible approach to monolayer formation. Exploratory study of ultraviolet irradiation of evaporated Formvar and styrene film showed heavy degradation of Formvar. No electrical effects attributed to irradiation have been found.

Experimental procedures used in forming and testing the organic film sandwiches are outlined.

UNCLASSIFIED

1. Organic Thin Films
2. Langmuir Films
3. Monolayer Films
4. Stearates
5. Polyvinyl Benzoate
6. Preparation
7. Tunneling
8. Schottky
9. Temperature
10. Irradiation
11. Polymerization
12. V-I Curves
13. Polycondensation
14. Evaporation