ESD TDR 64-230
ESTI FILE COPY

ESD-TDR-64-230

(FINAL REPORT)

ANALYSIS AND DESIGN OF CBR PROTECTION FOR THE AN/TSQ-47 SYSTEM

TECHNICAL DOCUMENTARY REPORT NO. ESD-TDR-64-230

JULY 1964

ESD RECORD COPY
RETURN TO
SCIENTIFIC & TECHNICAL INFORMATION DIVISION
(ESTI), BUILDING 1211

COPY NR. _____ OF _____ COPIES

482L SYSTEM PROGRAM OFFICE
ELECTRONIC SYSTEMS DIVISION
AIR FORCE SYSTEMS COMMAND
UNITED STATES AIR FORCE
L. G. Hanscom Field, Bedford, Massachusetts

ESTI PROCESSED

☐ DDC TAB ☐ PROJ OFFICER
☐ ACCESSION MASTER FILE
☐ _____

DATE _____

ESTI CONTROL NR. AL-41173

CY NR 1 OF 1 CYS

(Prepared under Contract No. AF 19(628)-3275 by D. R. Walin, General Dynamics Corporation, Convair Division, San Diego, California.)

AD603100

ESD-TDR-64-230

(FINAL REPORT)

ANALYSIS AND DESIGN OF CBR PROTECTION FOR THE AN/TSQ-47 SYSTEM

TECHNICAL DOCUMENTARY REPORT NO. ESD-TDR-64-230

JULY 1964

482L SYSTEM PROGRAM OFFICE
ELECTRONIC SYSTEMS DIVISION
AIR FORCE SYSTEMS COMMAND
UNITED STATES AIR FORCE
L. G. Hanscom Field, Bedford, Massachusetts

(Prepared under Contract No. AF 19(628)-3275 by D. R. Walin, General Dynamics Corporation, Convair Division, San Diego, California.)

FOREWORD

This document was prepared by General Dynamics/Convair (Report No. GDC-64-026) for the Electronic Systems Division, Air Force Systems Command, United States Air Force. It is the final report under Contract AF19(628)-3275.

ABSTRACT

This document covers the analysis and design of CBR protection for AN/TSQ-47 system shelters. Standard CBR protection components were selected based on Category A protection requirements and a shelter system analysis. The E46R7 filter unit, Q-38 protective entrance (short), and E31 anti-backdraft valve, each with minor modifications, are the recommended CBR protection components. In addition, a booster blower unit is required in the shelter recirculation system to reduce shelter pressure. Components are sized based on assumed leakage and pressure drop characteristics. The values assumed are considered to be within 10% of actual values. Tests are defined to verify the assumptions if verification is considered necessary.

REVIEW AND APPROVAL

This technical documentary report TDR-64-230 has been reviewed and is approved.

HERBERT M. KNIGHT
Technical Contract Monitor

KEY WORDS

1. Communications equipment
2. Air traffic control systems
3. Radar
4. Mobile
5. Portable
6. Air transportable
7. Shelters
8. Analysis
9. Design
10. Biological warfare
11. Chemical warfare
12. Radiological warfare

CONTENTS

List of Illustrations vii

List of Tables viii

1. INTRODUCTION 1

2. SUMMARY 3

3. CBR PROTECTION REQUIREMENTS 5

3.1 Category of Protection 5

3.2 Category A Requirements 5

3.3 Protection Period 6

4. CANDIDATE CBR COMPONENTS 7

4.1 CBR Filter Units 7

4.2 Protective Entrance 9

4.3 Anti-backdraft Valve 13

5. SYSTEM INTEGRATION 17

5.1 System Description 17

5.2 Shelter System Operation 25

5.3 Design Requirements 27

5.4 Shelter System Analysis 29

6. SELECTED CBR PROTECTION DESIGN 47

6.1 Performance Requirements 48

6.2 Test Requirements 50

6.3 CBR Protection Components 52

6.4 Shelter Modifications 71

7. CONCLUSIONS 73

8. RECOMMENDATIONS 77

APPENDIX. SHELTER SYSTEM ANALYSIS 81

References 125

LIST OF ILLUSTRATIONS

1. Typical AN/TSQ-47 Shelter System Schematic. 12
2. Rectangular Protective Entrance. 14
3. Cylindrical Protective Entrance. 14
4. Anti-backdraft Valve. 15
5. Pressure Rise Characteristics-Air Conditioner. 20
6. Air Conditioner Cooling Capacity. 20
7. Ducting Pressure Drop Characteristics. 25
8. Shelter System Schematic with Booster Blower Unit. 30
9. Shelter System Characteristics. 32
10. Booster Blower Pressure Rise Versus Airflow. 33
11. Shelter System Pressures. 34
12. E46R7 Filter Unit Airflow to Shelter System — One A/C Shelters. 35
13. E46R7 Filter Unit Airflow to Shelter System — Two A/C Shelters. 36
14. Hot Day Shelter Temperatures. 37
15. Electrical Equipment Inlet Temperature. 38
16. Air Conditioner Inlet Temperature. 39
17. AN/TSC-23 Shelter Temperature. 40
18. Airflow Characteristics -E46R6 Filter Unit Fan. 45
19 E46R6 Filter Unit Characteristics. 45
20. Performance Characteristics of Anti-backdraft Valve, E31. 46
21. TPS-35 Shelter System Plan. 57
22. TPN-14 Shelter System Plan. 58
23. TSW-5 Shelter System Plan A. 58

24. TSW-5 Shelter System Plan B. 59
25. TSW-6 Shelter System Plan. 59
26. TSC-23 Shelter System Plan A. 60
27. TSC-23 Shelter System Plan B. 60
28. TRN-17 Shelter System Plan. 61
29. Commercial Panel Fasteners. 62
30. Protective Entrance Attachment Methods. 62
31. Protective Entrance Attachment Methods. 62
32. Protective Entrance Attachment Methods. 62
33. Shelter Wall Fastener. 63
34. Shelter Wall Fastener. 63
35. Shelter Wall Fastener. 63
36. Protective Entrance Support Structure. 64
37. Protective Entrance Support Structure. 64
38. Booster Blower Unit. 65
39. Blower Airflow Characteristics. 66
40. Booster Blower Unit - Normal Operation. 68
41. Booster Blower Unit - CBR Protection. 68
42. Electrical Schematic, CBR Protection for Typical AN/TSQ-47 Shelter System. 69
43. CBR Control Panel. 72

LIST OF TABLES

I. Standard CRDL Approved CBR Filter Units 8
II. Standard CRDL Approved Gas Filters 10
III. Standard CRDL Approved Particulate Filters 11
IV. Air Conditioner Pressure Rise Characteristic 19
V. AN/TSQ-47 Shelter Data 22
VI. Flexible Ducting Pressure Loss Characteristics 23
VII. Shelter Heat Loads and Loss Coefficients 24
VIII. Selected CBR Protection Components for AN/TSQ-47 System Shelters 75

SECTION 1 | INTRODUCTION

An investigation was initiated on 1 July 1963 under Air Force Contract AF19(628)-3275 to determine the type of CBR equipment required for the protection of the various AN/TSQ-47 system shelters. This report contains the results of the investigative effort from 1 July 1963 through 31 January 1964.

The AN/TSQ-47 System is an air-transportable Air Traffic Control System consisting of the following personnel and equipment shelters:

a. AN/TPS-35 Search Radar.

b. AN/TPN-14 Final Approach Radar.

c. AN/TSQ-5 RAP CON.

d. AN/TSW-6 Tower.

e. AN/TSC-23 Long Range Communications.

f. AN/TRN-17 TACAN.

One or more 3-ton air conditioners control the environment of each shelter and one or more gas-turbine 400-cycle power generator units supply the electrical power for the air conditioners and shelter equipment. The over-all AN/TSQ-47 system is in the preproduction stage of development.

CBR protection equipment is equipment that prevents the infiltration of chemical, bacteriological and radiological warfare agents into an area occupied by personnel and equipment.

The investigation included the following:

a. A review of literature pertaining to CBR protection techniques.

b. Trips to U.S. Army Chemical Center at Edgewood, Maryland, shelter and equipment manufacturers, and the contractor to obtain background information.

c. A pressure and temperature analysis of each shelter system.

d. Preliminary design of CBR protection equipment required.

Although not required, a progress report (Reference 1) was prepared to facilitate discussion of conclusions reached with the contractor approximately midway through the investigation.

SECTION 2 | SUMMARY

Category A CBR protection is required for AN/TSQ-47 system shelters. Category A protection as applied to shelters requires for each shelter a CBR filter unit, shelter system pressurization, a protective entrance, an anti-backdraft valve, and remote controls for these components. Standard Chemical Corps components were investigated and found with capacities in the range required. Each of the six AN/TSQ-47 system shelters was analyzed to determine the performance requirements of CBR protection components. The analysis results show that when the shelter system is pressurized a booster blower is required in the shelter recirculation system to reduce shelter static pressure to where door loads are acceptable for ease of entrance. A booster blower unit has been designed to meet the requirements shown by the analysis.

CBR protection components selected for the AN/TSQ-47 system shelters are:

a. E46R7 Filter Unit.

b. Q-38 Protective Entrance (short).

c. E31 Anti-Backdraft Valve.

Each of these components will require some modification, as described in Paragraph 6.3. Procurement descriptions and drawings for these units can be obtained from the Chemical Corps. Shelter modifications will be required, as described in Paragraph 6.4, to accept the protection components, the booster blower unit and a control panel. Detailed modification designs could not be made because final shelter drawings were not available. Booster blower and CBR filter unit performance requirements are based on assumed values for shelter and air conditioner leakage, and shelter recirculating airflow pressure drop. Assumptions are considered to be within 10% of actual. However, tests are defined in Paragraph 6.2 to verify the assumptions if verification is considered necessary.

SECTION 3 | CBR PROTECTION REQUIREMENTS

3.1 CATEGORY OF PROTECTION

The Chemical Corps Board has established four categories of collective protection applicable to transport vehicles or vans (see Reference 2). These four categories are listed and defined as follows:

Category A — CBR protection equal to the standard personnel gas masks while eliminating the human element (time-to-mask, mask fit, and danger of continuous exposure may be disregarded). This includes an air lock to allow shelter entrance or exit.

Category B — CBR protection equal to standard personnel gas masks while eliminating the human element; no air lock.

Category C — Personnel gas mask only CBR protection.

Category D — Shelter space sealed from external infiltration and inert as to ventilation.

CRDL personnel recommended that the AN/TSQ-47 system shelters normally occupied by personnel be provided Category A protection.

3.2 CATEGORY A REQUIREMENTS

Category A protection as applied to AN/TSQ-47 system shelters requires for each shelter system the following:

a. A CBR filter unit (collective protector) to provide a source of filtered air.

b. Shelter system pressurization to prevent contamination of recirculated and/or make up air from the filter unit by leakage into the system.

c. A protective entrance to permit aseptic entry and exit from the shelters.

d. An anti-back draft valve to aid in maintaining shelter pressurization, and adjust makeup flow to personnel ventilation requirements.

e. CBR unit pressure controls, coordinated with the shelter system, to maintain pressurization and assure a contaminant-free atmosphere throughout the entire system.

3.3 PROTECTION PERIOD

It is not feasible to assume complete personnel isolation within enclosures of the AN/TSQ-47 system for extended periods. However, it is recommended that the CBR unit be operated at all times during imminent as well as actual attack. This means that the protection system must be set up and ready for use whenever the AN/TSQ-47 system is operated in an area considered subject to attack. Since early warning systems are not advanced to the state where they could be used automatically to activate the protection system, manual actuation will be required, preferably from within the shelter. For minimum actuation time, turning a switch to "on" should be all that is necessary to actuate the protection system.

Standard CBR filter units provide CBR protection equal to the standard personnel gas mask. According to the gas-aerosol filter qualification tests, this means that continuous protection will be provided for approximately 200 attacks at expected concentrations. Since 200 attacks within a 30-day period is highly improbable, a CBR unit designed according to CRDL criteria should readily meet the 30-day protection period specified for the AN/TSQ-47 system.

SECTION 4 | CANDIDATE CBR COMPONENTS

4.1 CBR FILTER UNITS

Standard CBR filter units must include a pre-filter, particulate filter, gas-aerosol filter, and an integral blower unit. The particulate and gas filters may be replaced subsequently with a combination unit now under development testing at CRDL. The pre-filter ensures removal of relatively large particles, such as dust, fallout material and debris — thus extending the life of the particulate filter. The particulate filter must have a 99.9% efficiency for particles of 0.3-micron size. Gas-aerosol filtration is accomplished by use of impregnated activated coconut shell charcoal in beds of integrated fiber-bound layers (combination unit). The integral blower unit must maintain system pressurization as well as overcome the resistance of the filters.

Currently available CRDL-qualified CBR filter units are listed in Table I along with the physical characteristics of each unit. Most of the Table I units were designed for a specific shelter, vehicle or van, which means that some modifications probably will be required to adapt a selected unit to the AN/TSQ-47 system shelters. When a new filter unit design has passed performance tests, a Chemical Corps purchase description is prepared along with production drawings.

Considering that the CBR filter unit required for each shelter system in the AN/TSQ-47 system must provide filtered air to a protective entrance as well as the shelter system while maintaining pressurization, a CBR filter unit with rated flow in the 200- to 400 cfm range is required. From Table I, the M6, E46R7, and Missile Monitor CBR filter units have rated flows in the required range.

Table I. Standard CBR Filter Units,
CRDL - Approved Army Stock Items

	Gas Filter			Particulate Filter						
CBR Unit No.	No.	Rated Flow (cfm)	ΔP In. H_2OG	No.	Rated Flow (cfm)	ΔP In. H_2OG	Size (in.)	Weight (lb.)	Blower Power	Rated Flow (cfm)
M6	M10(2)	150	4.5				24 x 34 x 39	400	1kw	300
M8	M12(1)	12	4.2	M13	12	0.70	13 x 8 x 6	27	72w	12
M9	C10(10)	60	1.0	C18	600	1.25	81 x 31 x 40	600	0.73kw	600
M10	C10(20)	60	1.0	C19	1,200	1.25	136 x 31 x 40	1,000	3.3kw	1,200
M11	C10(42)	60	1.0	C30	2,500	1.00	138 x 52 x 40	1,500	3.3kw	2,500
M12	C10(84)	60	1.0	C20	5,000	1.25	158 x 53 x 60	2,600	4.75kw	5,000
M13	M18(2)	10	1.4	M19	20	0.94			137.5w	20
E36	E36R1(1)	75	3.1	E37	75	0.24	27 x 26 x 18	120	8.2kw	75
E38	E39R1(1)	50	3.4	E40	50	0.43	20 x 18 x 18	72		50
E45R2	E46(11)	220	2.1	E47	2,400	2.0	84 x 47 x 36	1,200	5.44kw	2,400
E46R7	E52(2)	150	3.6	E53(2)	150	1.0	40 x 24 x 16	160	0.523kw	300
Missile Monitor	B(4)	100	2.3	-	400	1.1	64 x 25 x 21	382	1.8hp	400

The M6 unit does not meet the latest CBR unit requirements because it does not include a particulate filter. Procurement descriptions and drawings for the E46R7 and Missile Monitor filter units were obtained from the Chemical Corps to facilitate the final unit selection.

Tables II and III list standard CRDL-approved gas filters and particulate filters. A new CBR filter unit can be designed specifically for the AN/TSQ-47 shelter system using combinations of the filters in Tables II and III. Barnebey-Cheney also has particulate and gas-aerosol filters that have less pressure drop than the equivalent CRDL-approved units. The Barnebey-Cheney filter units would require testing to CRDL specifications. Figure 1 presents a schematic of a standard CBR filter unit such as the selected Missile Monitor unit incorporated into the AN/TSQ-47 system.

4.2 PROTECTIVE ENTRANCE

A protective entrance essentially is an air lock to prevent the infiltration of contaminated air when personnel are entering or leaving a shelter. Protective entrance designs applicable to the AN/TSQ-47 system are collapsible and include tubular and channel framing covered with impermeable butyl fabric or transparent plastic containing zipper-flap vent holes and entrance. The protective entrance may be attached to the shelter around the entrance door by a zipper-flap arrangement.

CBR filter unit air is fed to a plenum at the top or one side of the entrance to maintain an internal static pressure slightly less than shelter pressure when the entrance is closed. The side of the plenum facing the inside of the entrance is made of permeable fabric that uniformly distributes airflow over the cross section of the entrance. Depending on the design, the air flows uniformly across or down the entrance to vent holes. Manually regulated vent holes are provided to allow adjustment of the entrance pressure leakage characteristic to match the pressure flow capacity of the CBR filter unit or to increase decontamination purging when necessary. The force to open the zippered slot for personnel access decreases as the aperture increases. A zippered slot also is provided for

Table II. Gas Filters

	M13 Filter Unit	M1 Filter Unit	RADC E38 Filter Unit	Mauler Filter Unit A	Mauler Filter Unit B	Fixed Install. Filter Unit	RADC E38 Filter Unit	Missile Monitor Filter Unit B	M8 Filter Unit	Hawk Filter Unit	Missils Monitor Filter Unit A	Nike Hercules Filter Unit
Filter No.	M18	M12	E39R1	E54*	E54R1*	C10	E36R1		M10	E52		E46
Rated Flow (cfm)	10	12	50	50	50	60	75	100	150	150	200	220
Over-all Dimensions (in.)	5 5/8 dia. x 9 1/4	5 7/8 x 6 15/16 x 3	14 1/2 x 14 1/2 x 2 1/2	7 dia. x 11 1/2	7 dia. x 10 1/2	24 x 24 x 1 1/4	15 x 22 x 2 1/2	22 1/2 x 21 x 1 3/4	24 x 24 x 2 11/16	22 x 21 x 2	37 3/4 x 16 x 2	24 x 43 x 1 1/4
Gross Weight (lb)		2.8	13	8.3	7.4	25	20	2575	40	28	34.5	50
Weight of Charcoal (lb.)	1.6	1.9	8	6.5	5.8	16	12.5	17	32	18.5	25	30
Charcoal Bed Depth (in.)	1 3/8	2 1/16	2 1/4	2	2	1 1/8	2 1/4	1 3/4	2 1/4	2	2	1 1/4
Total Bed Area (sq. ft.)	0.426	0.25	1.17	1.20	1.09	3.36	1.92	3.21	3.36	3.13	4.10	7.05
Net Bed Area ** (sq. ft.)	0.405	0.21	0.96	1.09	1.01	2.95	1.64	2.51	2.95	2.51	3.30	6.05
Retaining Bolts Through Bed			4			1	8	4	1	1	8	6
Air Velocity - Net Bed (fpm)	24.7	57.1	52.1	45.9	49.6	20.3	45.8	39.8	50.8	59.8	80.6	36.4
Air Resistance (wg)	1.4	4.2	3.4	3.3	4.0	1.0	3.1	2.3	4.5	3.6	4.1	2.1
Gas Life, CG (ar), Min.	31	28	33	22	22.5	48	38	25	46	22	23	18.5
Adsorption CG by Charcoal (%)	12	11	12.9	10.6	12.1	11.3	13.5	12.1	13.5	11.1	11.5	8.5

* Cylindrical Configuration

** Area Not Covered by Baffles

Note: Concentration of CG in Gas Test was 10 mg/1.

Table III. Particulate Filters

	Tank (M & A1)	Tank (M13)	Commun. Ctr. (E38)	Commun. Ctr. (E36)	Mauler	Mauler	Mauler	Hawk (E46R7)	Missile Monitor	Fixed Install.	Fixed Install.	Nike (E45R2)	Fixed Install.	Fixed Install.
Filter No.	M13	M19	E40	E37	E55	E55R1	E55R2 ①	E53		C18	C19	E47	C30	C20
Capacity (cfm)	12	20	50	75	100	100	100	150	400	600	1,200	2,400	2,500	5,000
Maximum Air Resistance (wg)	0.70	0.94	0.43	0.24	1.06	0.70	0.50	1.0	1.1	1.25	1.25	2.0	1.0	1.25
Filter Paper Media	Type 6	Type 6	Type 6	Type 6	Glass Fiber ④	Glass Fiber ④	Glass Fiber ④	Type 6	Glass Fiber ④	Type 6	Type 6	Type 6	Type 6	Type 8
Type of Separatore	C.K.P ①	C.K.P ①	C.K.P ①	C.K.P ①	Corr. Alum.	Corr. Alum.	Corr. Alum.	C.K.P ①	Corr. Alum.	C.K.P ①	C.K.P ①	C.K.P ①	C.K.P ①	C.K.P ①
Over-all Dimensions, In.	7 x 5 1/2 x 1 7/8	7 x 5 1/2 x 4 1/8	14 1/2 x 14 1/2 x 2 7/8 ①	15 x 22 x 3 3/8 ①	9 7/8 x 16 3/4 x 3 1/2 ①	9 7/8 x 16 3/4 x 4 1/2 ①	9 7/8 x 16 3/4 x 4 1/2 ①	22 x 21 x 2	21 3/4 x 16 x 9 1/2 ①	24 x 24 x 5 7/8	24 x 24 x 11	43 x 31 1/2 x 6	24 x 46 1/2 x 11	48 x 48 x 11
Filter Paper Cartridge Size Before Cementing (in.)	6 x 4 1/2 x 1 1/2	6 x 4 1/2 x 3 3/4	13 x 13 x 2 1/4	13 1/2 x 20 1/2 x 2 3/4	7 5/8 x 15 x 3	7 5/8 x 15 x 3	7 5/8 x 15 x 4	19 7/8 x 18 7/8 x 1 3/4	19 x 14 x 5 1/2	22 1/2 x 22 1/2 x 5 3/4	22 1/2 x 22 1/2 x 10 1/2	41 x 29 1/2 x 5 3/4	22 1/2 x 46 1/2 x 10 3/4	46 1/2 x 46 1/2 x 10 3/4
Face Area (sq. ft.)	0.19	0.19	1.17	1.92	0.79	0.79	0.79	2.61	1.85	3.36	3.36	8.4	6.8	14.7
Eff. Filter Paper Area, (sq. ft.)	2.75	6.88	21.7	64.1	15.25	22.24	29.65	28.5	57	115	200	423	430	1,000
Face Air Velocity, (fpm)	63	105	42.7	39.1	127	127	127	57	216	179	357	286	368	340
Air Velocity Through Eff. Filter Paper Area (fpm)	4.36	2.91	2.3	1.17	6.56	4.5	3.37	5.27	7.02	5.2	6.0	5.67	5.8	5.0
Weight (lb.)	1.25	7.0	4.5	7.2	2.5	3.25		6. 5	13	18	40	38	64	120

① Includes Gaskets
② Calculated Data, Item not yet Fabricated
③ C.K.P. — Corrugated Kraft Paper
④ Mil. Spec. — MIL-F-51079

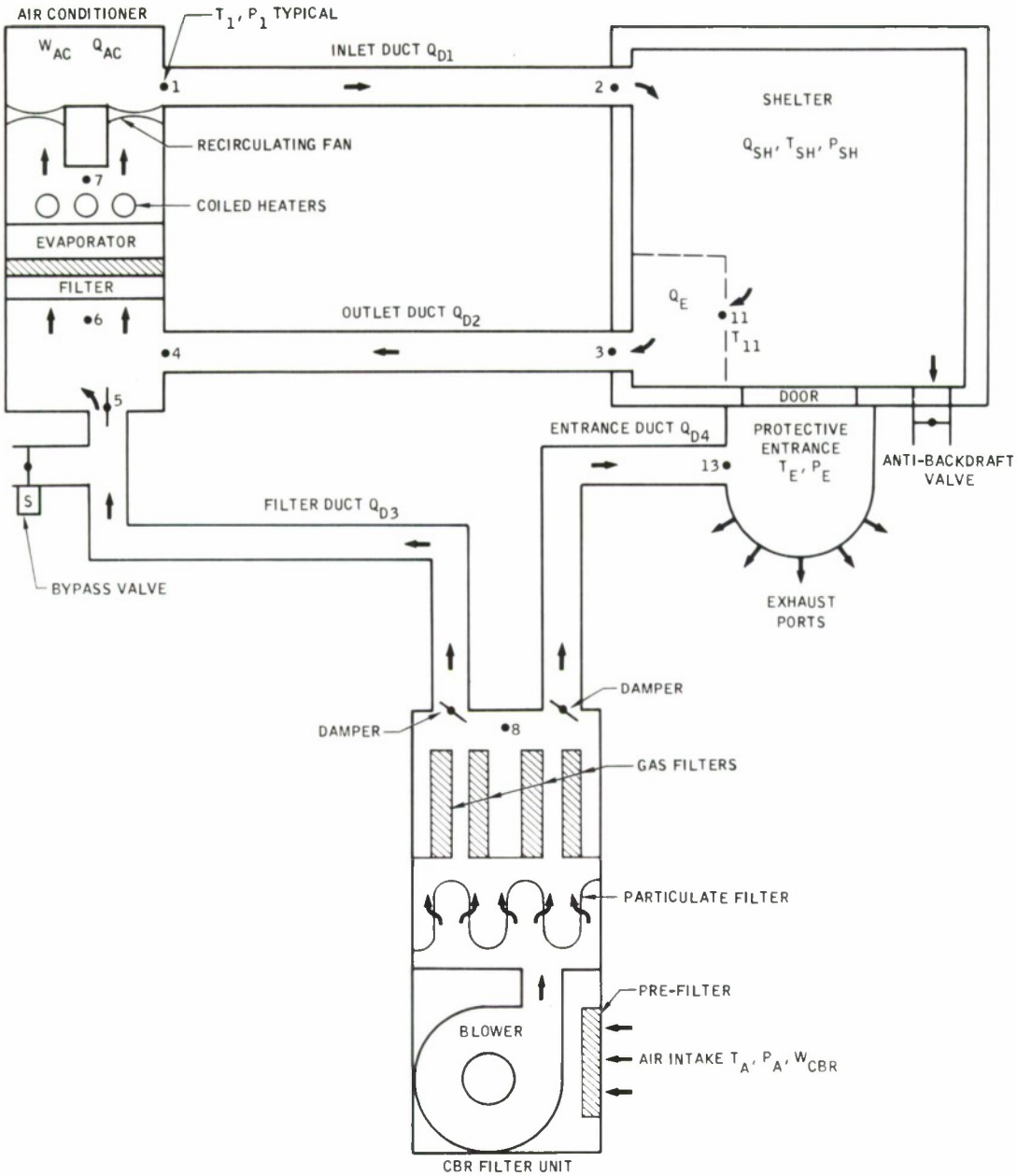

Figure 1. Typical AN/TSQ-47 Shelter System Schematic

discarding contaminated clothing. All zippered or controllable openings contain internal and external flap seals to prevent leakage when closed.

Both rectangular and cylindrical protective entrance designs are available. Figure 2 shows the rectangular design, designated as Protective Entrance, Missile Van, Collapsible, E25R1, described in Reference 3. Figure 3 shows the cylindrical design described in Reference 4. Since the cylindrical design appeared more adaptable to the AN/TSQ-47 system shelters, drawings were obtained from the Chemical Corps.

4.3 ANTI-BACKDRAFT VALVE

An anti-backdraft valve is used as an exhaust for shelter ventilation air, to maintain a nearly constant shelter static pressure, and to prevent a reverse flow of air from the atmosphere should a pressure wave develop on the outside. Figure 4 shows an available valve, designated as valve, anti-backdraft, E31. The pressure drop across this valve is regulated by positioning the counterweight on the arm attached to the hinged valve damper. An air-type dashpot is included to prevent damper oscillation. A purchase description and drawing was obtained for the E31 anti-backdraft valve from the Chemical Corps.

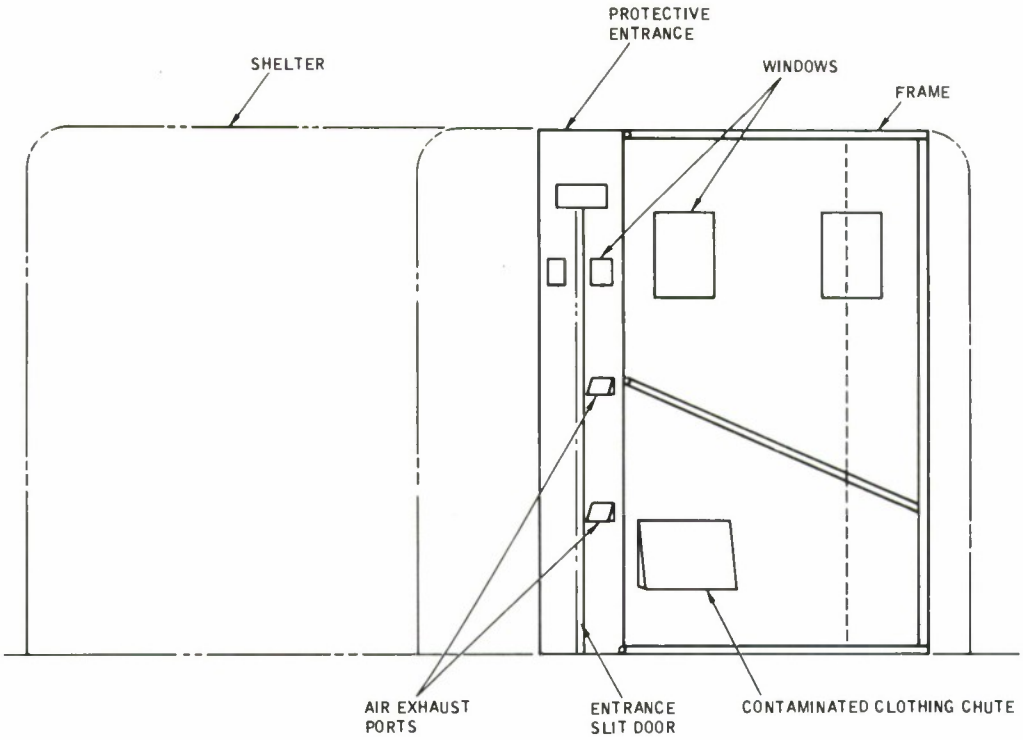

Figure 2. Rectangular Protective Entrance

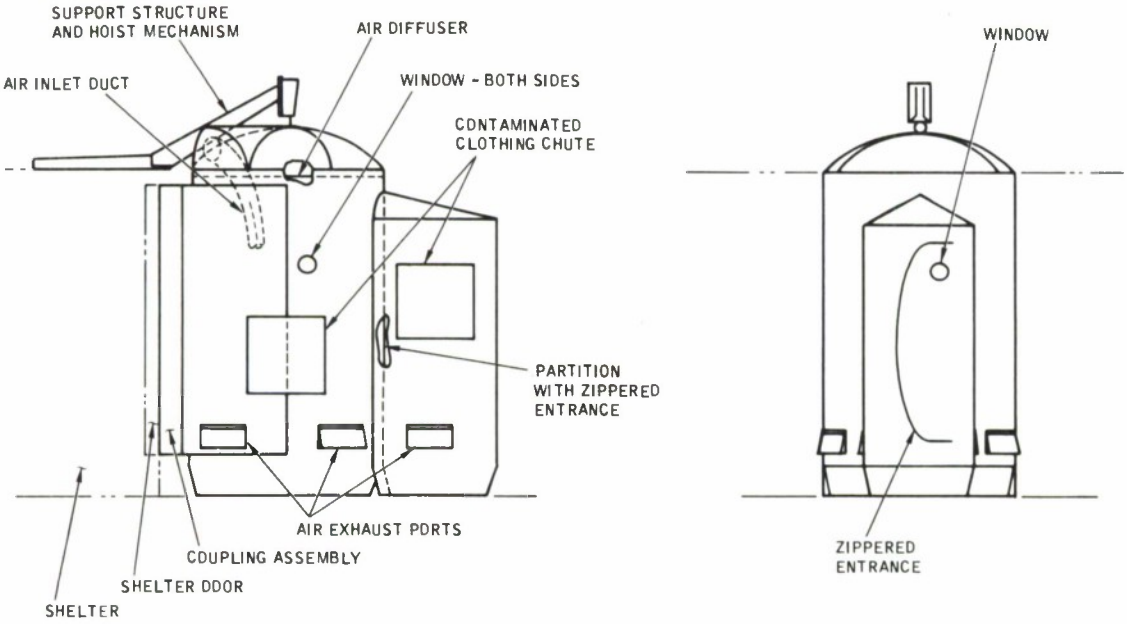

Figure 3. Cylindrical Protective Entrance

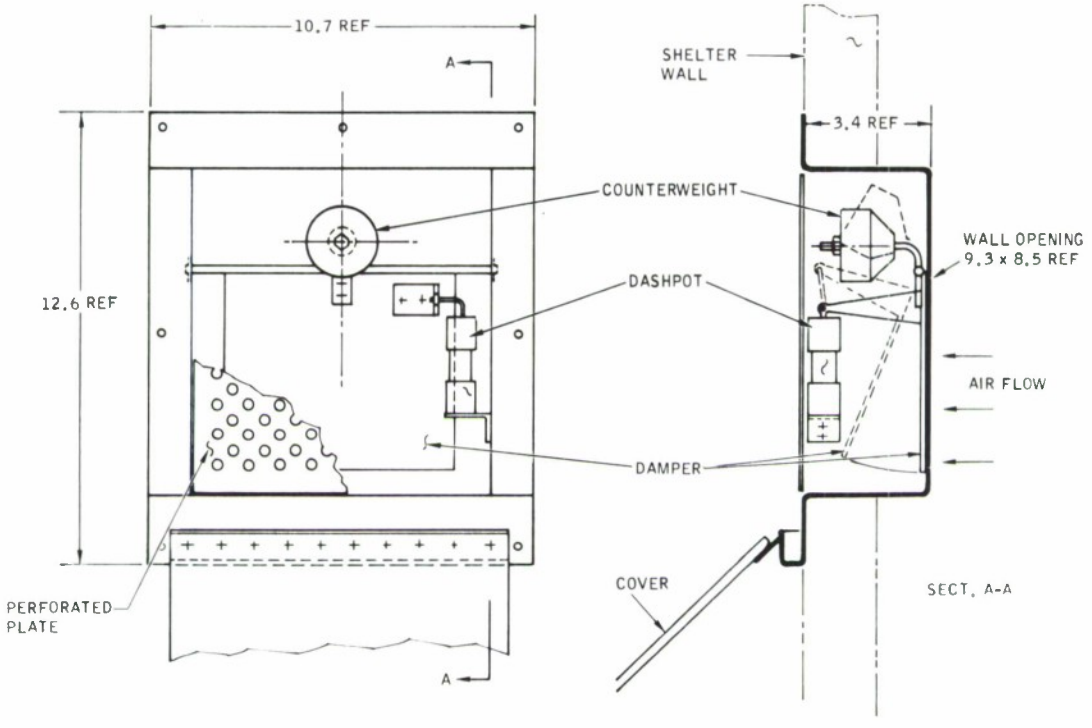

Figure 4. Anti-backdraft Valve

SECTION 5 | SYSTEM INTEGRATION

5.1 SYSTEM DESCRIPTION

Figure 1 shows a schematic of a typical AN/TSQ-47 shelter system with the required CBR protection components. Included are identifying symbols for system performance analysis. Primary shelter system components are:

a. One or more air conditioners (depending on the total shelter heat load) having a nominal cooling capacity of 35,000 BTU per hour and a heating capacity of 18,400 BTU per hour.

b. Two, 20-ft.-long insulated flexible air ducts with a nominal diameter of 10 in. (per air conditioner).

c. One equipment and personnel shelter.

Primary CBR protection components to be sized and integrated with the shelter system are:

a. CBR filter unit.

b. Protective entrance.

c. Two sections of insulated flexible ducting to supply filter unit air to air conditioner and protective entrance.

d. A bypass valve to supply fresh air when CBR protection is not required.

e. An anti-backdraft valve.

f. A control panel to be installed in the shelter.

5.1.1 AIR CONDITIONER — The air conditioner is an AiResearch 3-ton unit designated No. 682910-1 for the AN/TSQ-47 communication system. It contains an evaporator, a hermetically sealed compressor, a condenser (with an integral receiver), an evaporator fan, two condenser fans, a refrigerant constant-pressure expansion valve, a refrigerant hot-gas bypass control valve (used to control the cooling capacity), a refrigerant sight gage, an air filter, a thermostat, a fresh air damper, and miscellaneous system control components. The air conditioner, when used to heat or cool and dehumidify the atmosphere of an enclosure, is normally externally connected to the enclosure by means of two flexible ducts. In operation, conditioned air is continuously circulated through the enclosure by the evaporator fan of the air conditioner. Ambient (fresh or CBR filter unit) air can be mixed with the recirculated air to provide ventilation for the occupants of the enclosure, if desired. Air conditioner cooling capacity is controlled in response to the enclosure return air temperature at the inlet to the air conditioner. A thermal bulb, sensing return air temperature, operates an adjustable thermstat located on the air conditioner control panel. The thermostat controls cooling capacity by cycling the compressor hot-gas bypass valve open and closed, and heating capacity by cycling the heaters off and on in response to the temperature set at the air conditioner return air inlet. A dial knob on the thermostat allows selection of control temperatures between 60° F and 90° F.

The recirculated airflow delivered by the air conditioner is affected by the pressure drop of the air distribution system external to the air conditioner. The air distribution system includes the flexible ducting and the shelter. Air conditioner cooling capacity, in turn, is affected by the recirculated airflow. Recirculated airflows versus corrected air distribution pressure losses calculated in Table IV based on Reference 5 data are shown in Figure 5 and recirculated airflow versus cooling capacity is shown in Figure 6. These figures show that as air distribution system pressure losses increase, recirculated airflow and cooling capacity will decrease. Reference 5 contains a more detailed description of the air conditioner. The Figure 6 curve was plotted from Reference 5 data.

Table IV. Air Conditioner Pressure Rise Characteristics

Recirculating Airflow WA (lb./min.)	Cooling Capacity QE (BTU/hr.	Available Pressure Rise ΔP (in. H_2O)	Air Conditioner Inlet Temp. (°F)	Air Conditioner Inlet Pressure (in. H_GA)	AIR Temp. Drop ΔT 1 °F Q_e/ .24Wa)	Outlet Temp. (°F)	Outlet Press. (in. H_GA)	σ $17.32P_o/(T_o)$	$\sigma\Delta P$
50	24,250	2.58	102	29.92	33.68	68.32	30.11	0.9871	2.55
60	28,300	3.46	102	29.92	32.75	69.25	30.10	0.9850	2.42
70	30,500	2.28	102	29.92	30.26	71.74	30.09	0.9801	2.23
80	32,000	1.91	102	29.92	27.79	74.22	30.06	0.9746	1.86
90	33,250	1.545	102	29.92	25.66	76.34	30.03	0.9698	1.498
100	34,300	1.085	102	29.92	23.82	78.18	30.00	0.9655	1.048
100	35,300	0.505	102	29.92	22.29	79.71	29.96	0.9615	0.486

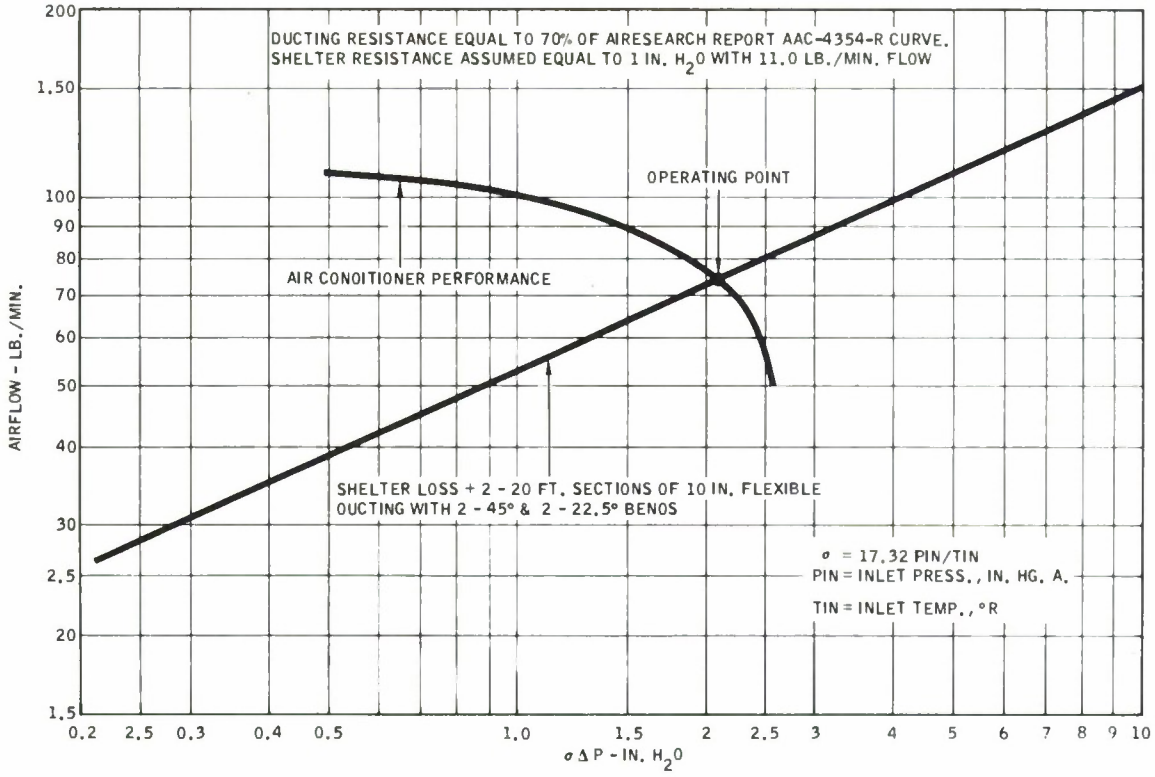

Figure 5. Pressure Rise Characteristics-Air Conditioner

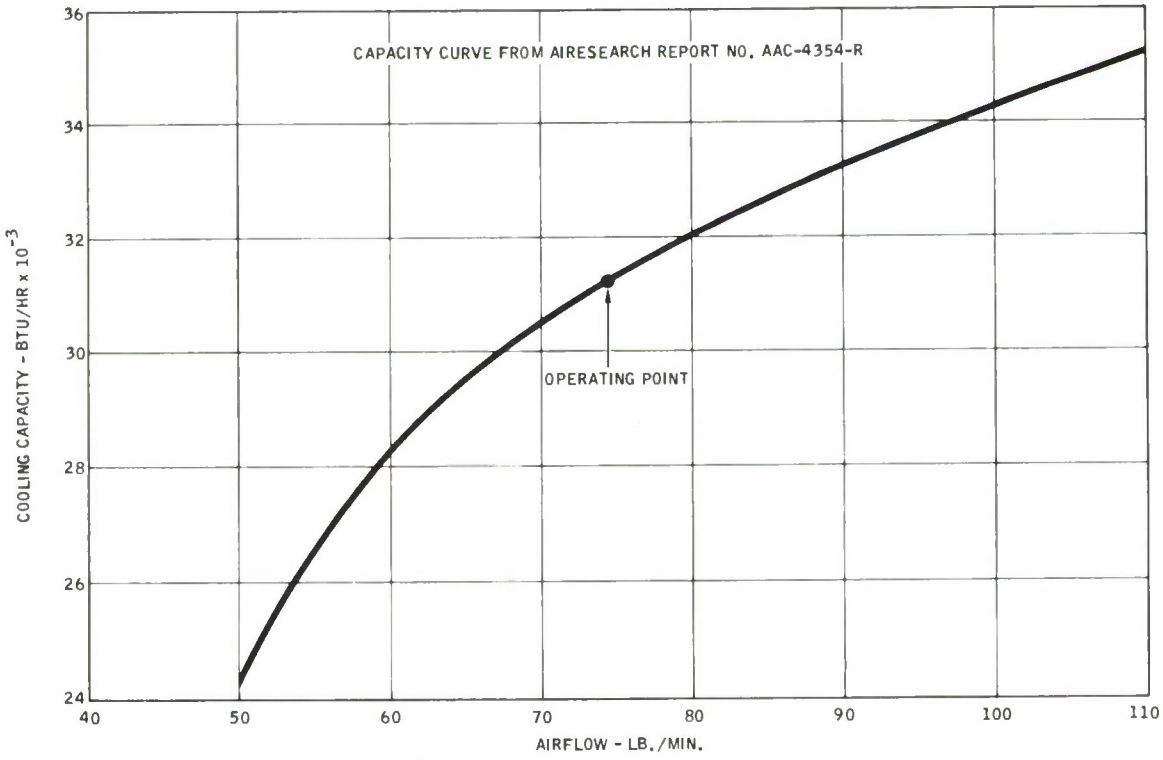

Figure 6. Air Conditioner Cooling Capacity

Air conditioner leakage was assumed equal to 40 cfm when the static pressure at the inlet to the recirculating fan is equal to 0.3 in. of water gage for the shelter system analysis. This assumption is based on the leakage characteristics shown in Reference 3 for a 5-ton air conditioner.

5.1.2 SHELTER — In general, the recirculating airflow path through each of the six AN/TSQ-47 system shelters is from inlet to shelter space, from shelter space through electrical or electronic equipment into an outlet plenum, and out through the outlet port. In passing through the shelter space, the recirculated airflow will pick up heat from personnel and shelter wall infiltration. Although some of the equipment dissipates heat to the shelter space, the total equipment heat load has been assumed absorbed by the air after it passes through the shelter space. Table V shows, for each of the six shelters, the electrical and personnel heat loads along with the number of air conditioners required. The shelters requiring two air conditioners have two recirculating air inlets and outlets, so that the air conditioners and ducting (four ducts) are in parallel up to the shelter.

Shelter leakage is assumed equal to 25 cfm when shelter static pressure is equal to one inch of water gage for the shelter analysis. This assumption is based on an inspection of the shelters. Pressure drop from the shelter recirculating air inlet to outlet is assumed equal to one inch of water with a recirculating airflow of 110 lb./min. through the one-air-conditioner shelters and 220 lb./min. through the two-air-conditioner shelters. This assumption is based on an AiResearch estimate.

5.1.3 INSULATED FLEXIBLE DUCTING — Pressure loss characteristics of the 20-ft. sections of 10-in. nominal diameter insulated flexible ducting are calculated in Table VI and plotted in Figure 7 based on information from Mr. Ken Kummerlow of AiResearch, Phoenix, Arizona that the latest ducting has 70% of the pressure drop quoted in Reference 5. The over-all heat transmission coefficient of the ducting shown in Table VII is calculated in the Appendix, based on information from ESD.

Table V. AN/TSQ-47 Shelter Data

Shelter Personnel

Shelter	Designation	Mfr.	Occupancy (Persons)	Latent Heatload (BTU/hr.)	Sensible Heatload (BTU/Hr.)	Total Heatload Q_p (BTU/Hr.)	Electrical Heat load Q_E (BTU/Hr.)	No. Air Conditioner
AN/TPS-35	Search Radar	Craig Systems	1	450	150	600	23,766	1
AN/TPN-14	Final Approach Radar	Craig Systems	1	450	150	600	17,096	1
AN/TSW-5	RAP CON	Gestenschliger	3-9	1,350 - 4,050	450- 1,350	1,800 - 5,400	36,050	2
AN/TSW-6	Tower	Craig Systems	3	1,350	450	1,800	16,295	1
AN/TSC-23	Long-Range Comm.	Craig Systems	3-5	1,350 - 2,250	450 - 750	1,800 - 3,000	49,763	2
AN/TRN-17	TACAN	Twin Coach Co.	0-1	0-450	0-150	0-600	11,945	1

Table VI. Flexible Ducting Pressure Loss Characteristics

Calculated from AiResearch Curve AAC-4364-C1 in Report AAC-4354-R, Assuming Latest Ducting has 70% of the Curve AAC-4364-1 Drop (Assumption from Mr. K. Kummerlow of AiResearch on 11-12-63).

$$\Delta P = f(1/A^2) = f(1/D^4) = f(D_1/D_2)^4.$$

$$= f(L) \quad = f(L_1/L_2)$$

Assume Shelter Loss = 1 in. H_2O with 110 lb./min. (Kummerlow)

	30 ft.-10 in. Duct from Curve AAC-4364-1		20 ft.-10 in. Duct New Duct		2-20 ft. Sections or 40 ft.-10 in. Duct		Shelter	Shelter + 40 ft. 10 in. Duct	
	Straight Duct	135° of Bends	Straight	135° of Bends	Straight	135° of Bends		Straight	135° of Bends
Airflow (lb./min.)	$\sigma\Delta P$ in. H_2O	$\sigma\Delta P$ in. H_2O	$\sigma\Delta P$ $[(.7)(20)/(30)]$ x ②	$\sigma\Delta P$ $[(.7)(20)/30]$ x ②	$\sigma\Delta P$ in. H_2O	$\sigma\Delta P$ in. H_2O	$\sigma\Delta P$ in H_2O	$\sigma\Delta P$ in. H_2O	$\sigma\Delta P$ in. H_2O
①	②	③	④	⑤					
60	0.535	1.05	0.250	0.491	0.500	0.982	0.298	0.798	1.280
80	0.890	2.02	0.416	0.945	0.832	1.890	0.529	1.361	2.419
100	1.330	3.33	0.621	1.555	1.242	3.110	0.827	2.069	3.937
150	2.760	8.15	1.290	3.805	2.580	7.610	1.860	4.440	9.470
200	4.60	—	2.145	—	4.290	—	3.305	7.595	—

135° of Bends = 2 - 45° Bends and 2-22 1/2° Bends.

Table VII. Shelter Heat Loads and Loss Coefficients

Shelter	Electrical Heat Load Q_E (BTU/Hr.)	Electrical Heat Load Q_E (BTU/Min.)	Personnel Heat Load Q_p (BTU/Hr.)	Personnel Heat Load Q_p (BTU/Min.)	Duct Loss Coeff. $U_D A_D$ (BTU/Hr., °F)	Duct Loss Coeff. $U_D A_D$ (BTU/Min., °F)	Shelter Loss Coeff. $U_{Sh} \times A_{Sh}$ (BTU/Hr., °F)	Shelter Loss Coeff. $U_{Sh} \times A_{Sh}$ (BTU/Min., °F)
AN/TPS-35	23,766	396.10	600	10.00	29.25	0.4875	120.70	2.0117
AN/TPN-14	17,096	284.93	600	10.00	29.25	0.4875	120.70	2.0117
AN/TSW-5	36,050	600.83	5,400	90.00	29.25	0.4875	232.00	3.8667
AN/TSW-6	16,295	271.58	1,800	30.00	29.25	0.4875	296.00	4.9333
AN/TSC-23	49,763	829.38	3,000	50.00	29.25	0.4875	120.70	2.0117
AN/TRN-17	11,945	199.08	600	10.00	29.25	0.4875	95.83	1.5972

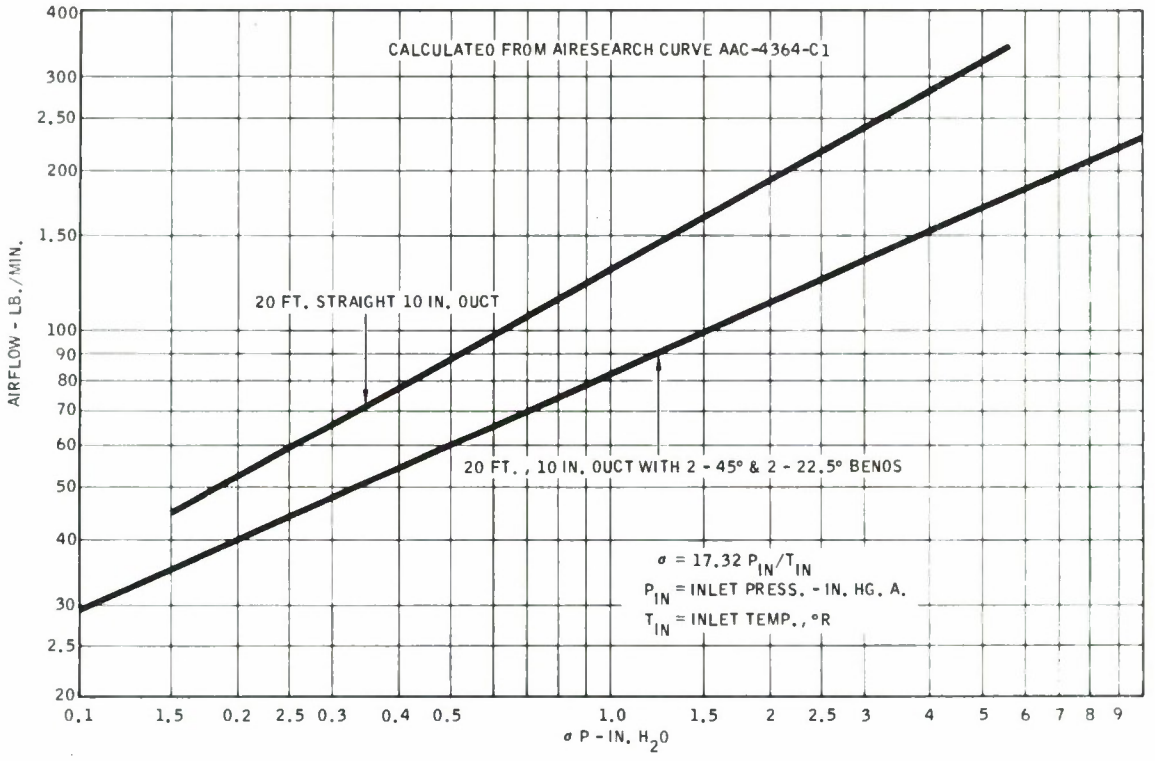

Figure 7. Ducting Pressure Drop Characteristics

5.2 SHELTER SYSTEM OPERATION

5.2.1 WITHOUT CBR PROTECTION — With a typical shelter system connected as shown in Figure 1, shelter personnel can select heating, cooling, or ventilation (air recirculation by evaporator fan only) to condition the shelter environment by actuating the desired switch on the air conditioner control panel and adjusting the thermostat to the desired temperature. When heating, cooling or ventilation is selected the evaporator fan recirculates air from the air conditioner to the shelter and back to the air conditioner via the flexible ducts. When the cooling switch is on and the inlet temperature to the air conditioner is above the thermostat setting, the air conditioner refrigeration unit is on and the evaporator removes heat from the recirculating air. When the heating switch is on and the inlet temperature to the air conditioner is below the thermostat setting, the electrical heaters in the air conditioner are on and heat is added to the recirculating air. In other words, heat is pumped by the recirculating air system either from

the shelter and ducting to the air conditioner or from the air conditioner to the ducting and shelter. The air conditioner dumps removed heat to the atmosphere via the refrigeration unit and adds heat via the electrical heaters.

Without CBR protection, the shelter pressure with the recirculation system on is at or slightly above the outside ambient pressure depending on the flow through the port in the shelter door. With the shelter at ambient pressure, the pressure at the inlet to the air conditioner will be below outside ambient due to the pressure drop of the return air duct. Also, the air conditioner inlet pressure must be below ambient before fresh or makeup air will enter the recirculation system. In turn, the pressure at the inlet to the evaporator or recirculating fan will be lower than the inlet to the air conditioner due to the pressure drop of the filter, evaporator and coiled heaters. Then, since the recirculating fan must overcome all the pressure losses in the recirculating airflow system, the recirculating fan inlet pressure is the minimum pressure in the recirculating system.

When the cooling load in a particular shelter exceeds air conditioner capacity, two air conditioners are connected in parallel to that shelter. The two air conditioner shelters will contain two inlet and two outlet ports, so that flexible ducting is connected from each air conditioner to the shelter.

5.2.2 WITH CBR PROTECTION — With CBR protection components connected to the typical shelter system as shown in Figure 1 and not activated, the shelter system will operate as described in Paragraph 5.2.1. When the CBR protection components are activated by a switch in the shelter, the fesh air bypass valve is closed and CBR filter unit blower is turned on. The CBR filter unit blower will deliver filtered air to the recirculation system and protective entrance with a pressure rise that will maintain system pressurization. The dampers are either manually or automatically adjusted so that the minimum pressure in the recirculation system is maintained at 0.3 in. of water gage, and a pressure slightly less than shelter pressure is maintained in the protective entrance. The quantity of filter air supplied to the recirculation system will be equal to either leakage

flow or personnel ventilation needs whichever is greater. When recirculation sytem leakage is less than ventilation requirements, the anti-backdraft valve is adjusted to maintain the required ventilation flow. Exhaust ports in the protective entrance are adjusted so that pressurization is maintained with the required purge flow. When the protective entrance door slot is opened, the entrance pressure will approach outside pressure and filter unit flow to the entrance will increase. Opening the shelter door with the protective entrance door closed (neither door should be opened simultaneously) will cause a surge of shelter air to the lower pressure entrance, and shelter pressure will approach entrance pressure. However, when shelter pressure drops, the anti-backdraft valve closes, the resistance of the recirculation system to filter unit flow also drops, and filter unit flow to the recirculation system increases. The surge of air to the protective entrance will increase the pressure and entrance resistance to filter unit flow, lowering the flow.

With automatic damper control, pressure sensors automatically control the dampers to maintain the desired pressures. Automatic damper control has the advantage of compensating for pressure buildup in the filters with operating time. With manual damper controls, an operating test must be made manually to adjust the dampers and assure that with entering and exiting personnel system pressurization will be maintained. A shelter pressure in the 0.5 to 1 in. of water gage range is desirable.

5.3 DESIGN REQUIREMENTS

CBR protection for any system ideally should be designed and developed concurrently with that system. With concurrent design and development, advanced CBR protection techniques can be integrated with system components to provide multipurpose collective protection. Since AN/TSQ-47 shelter system components already have been designed, advanced multipurpose CBR protection techniques can not be used. The objective, then, is to determine performance requirements of CBR protection components for the AN/TSQ-47 shelter systems and select standard components that meet the requirements.

CBR protection components, when added to a typical AN/TSQ-47 shelter system, will affect shelter system performance. Shelter system performance, in turn, dictates the capacity of the CBR filter unit. Shelter system pressurization must be maintained by the CBR unit. The flow required from the unit will be dependent upon either system leakages or personnel ventilation requirements, whichever are greater. Primary leakages will be from the air conditioner and the shelter. The leakage rate of these units is not known at present. Minimum pressure in the recirculation system will be at the air condioner recirculation blower inlet. For convenience, air conditioner leakage should be referenced to the pressure at the blower inlet. Shelter leakage will vary with shelter pressure which is dependent on the recirculating airflow rate. The airflow delivered by the air conditioner blower decreases as system pressure losses increase. The recirculation system pressure losses, excluding the air conditioner, are the result of flow losses through the flexible ducting, shelter and shelter components. Shelter pressure thus will be equal to 0.3 in. H_2O (recirculating blower inlet pressure), plus the system pressure loss from the shelter interior to the blower inlet at the recirculation airflow rate commensurate with such losses.

CBR filter unit total flow capacity must be equal to recirculation system leakages (assuming they are greater than personnel ventilation requirements), plus the protective entrance airflow requirement. The CBR unit blower must deliver the total flow at a pressure sufficient to maintain shelter and entrance pressurization. Blower power increases with flow and the pressure rise from inlet to outlet. Total blower input power will increase the temperature of the filter unit air because, as shown by Figure 1, the blower motor normally is mounted in the flow path for cooling. The temperature increase of the filter unit air adds an air conditioner cooling load that reduces shelter cooling capacity, increasing shelter temperature, thus dictating the requirement of a second air conditioner for a particular shelter. Therefore, protective entrance flow from the CBR filter unit should be provided by another flow path to facilitate entrance

pressure control and to minimize the air conditioner cooling load added by the filter unit. High entrance temperature should be tolerable for the relatively short time the entrance will be occupied by entering or exiting personnel.

5.4 SHELTER SYSTEM ANALYSIS

5.4.1 GENERAL — Each of the six AN/TSQ-47 system shelters was analyzed to determine hot day (T_A = 125° F) temperatures and pressures with CBR protection components connected as shown in Figures 1 and 8, and with a booster blower added as shown in Figure 8. The booster blower configuration was added because a preliminary analysis indicated that, with system pressurization, shelter pressure is too high for easy entrance to the shelter. The analysis described in detail in the Appendix is based on shelter system performance characteristics shown in Figures 5 through 7, Table VII, and on assumptions. Air conditioner performance, pressure drop and cooling capacity versus recirculating airflow, is shown in Figures 5 and 6. Ducting pressure loss characteristics are shown in Figure 7. The electrical and personnel heat loss coefficients in each shelter are shown in Table VII. Air conditioner leakage, shelter leakage, and shelter recirculating air pressure drop characteristics are assumed in Paragraphs 5.1.1 and 5.1.2 and the Appendix. These assumptions are based on engineering judgments and considered to be within 10% of actual valves.

The general analytical procedure consisted of: (1) assume temperature, pressure, and flow at one point in the recirculation system (T_7, P_7 W_{AC} in Figures 1 and 8); (2) calculate temperatures, pressures and flows around recirculation loop to and including starting point; (3) compare assumed and calculated starting point values, reestimate original assumptions and repeat calculations until assumed values equal calculated values. This iteration process was repeated for each shelter with a booster blower pressure rise of 1, 2, 3, 4, and 4.5 in. of water gage. Minimum pressure in the recirculation system was assumed equal to 0.3 in. of water gage. Minimum recirculation system pressure was assumed to be at the recirculation fan inlet initially, and then shifted to the

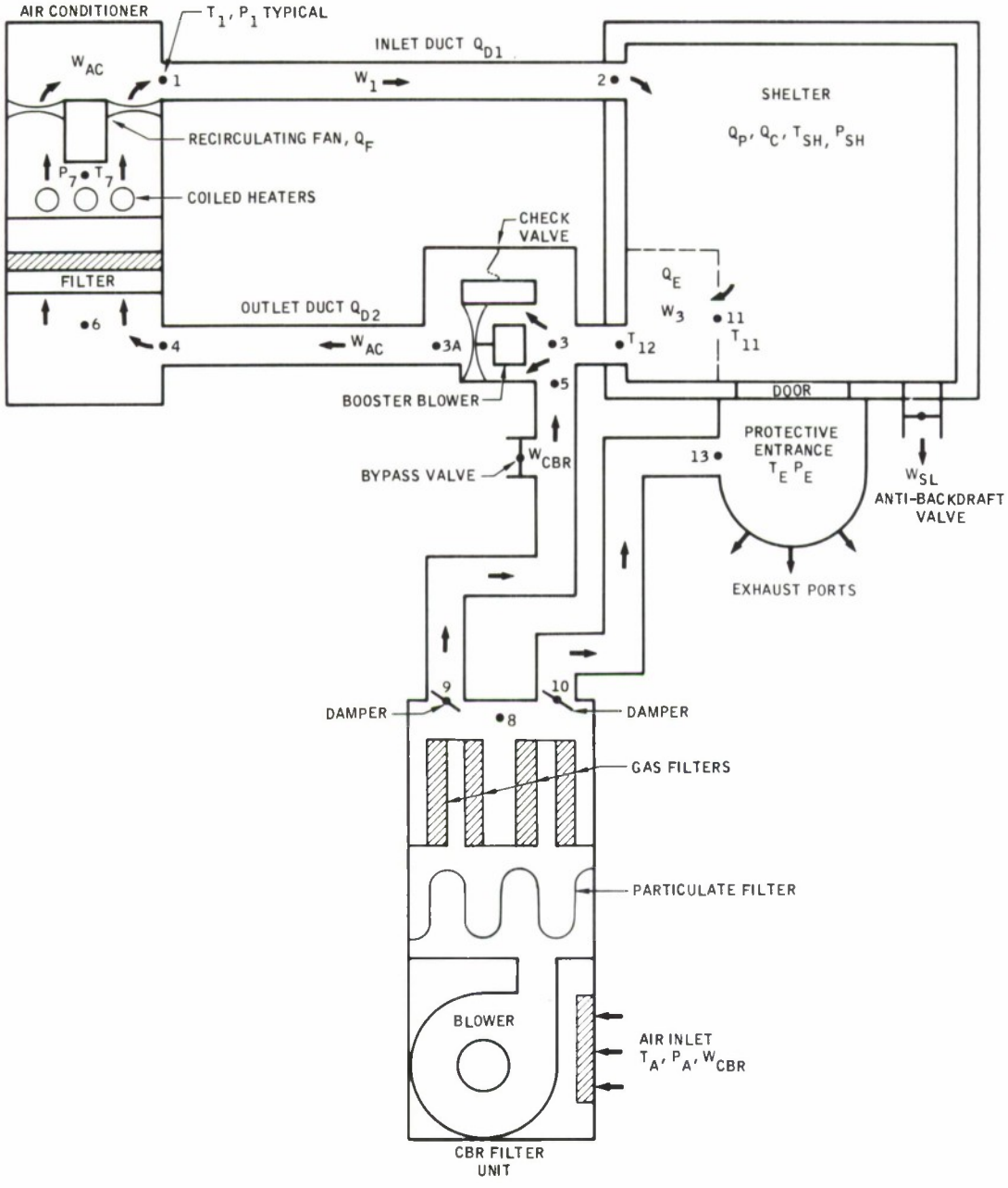

Figure 8. Shelter System Schematic with Booster Blower Unit

minimum pressure point based on the calculations. Since the calculation process required a tedious iteration process, a Simple Numerical Analysis Program (SNAP) for the IBM 1620 computer and the IBM 1620 computer was used to perform the calculations.

Analysis results are shown in Figures 9 through 17. Shelter system performance with CBR component connected is shown in Figures 9 through 17 where the booster blower pressure rise is zero. Performance of the Figure 8 system is shown where the booster blower pressure rise is greater than zero.

5.4.2 BOOSTER BLOWER REQUIREMENTS — Recirculation system pressure losses from the recirculating fan inlet to the shelter cause high shelter pressures as shown at the zero booster blower pressure rise points in Figures 9 and 11. Recirculation system pressure losses consist of air conditioner, ducting, and shelter losses. Ducting losses can be reduced by increasing the duct size or paralleling additional sections of ducting. Air conditioner pressure losses can be reduced only by modifying the unit. Shelter pressure losses which have been assumed, also can be reduced only by modifying the shelter. Duct and shelter losses are equal to approximately one half the total because the air conditioner inlet pressure is approximately one half of the shelter pressure at zero booster blower pressure rise, and shelter pressure minus the recirculating fan inlet pressure is equal to the summation of the air conditioner, one 20-ft. section of ducting and one half the shelter recirculating air pressure losses. Air conditioner and shelter modifications to reduce pressure losses are not practical. Therefore, a booster blower is required to reduce shelter pressures as shown by Figures 9 and 11.

Figure 9 shows how pressures and recirculating airflows vary with the pressure rise of a booster blower, installed as shown in Figure 8. As the booster blower pressure rise is increased from zero to 4.5 in. of water, the recirculating airflow will increase from approximately 76 lb./min. to 110 lb./min., the booster blower inlet pressure will decrease to where it becomes

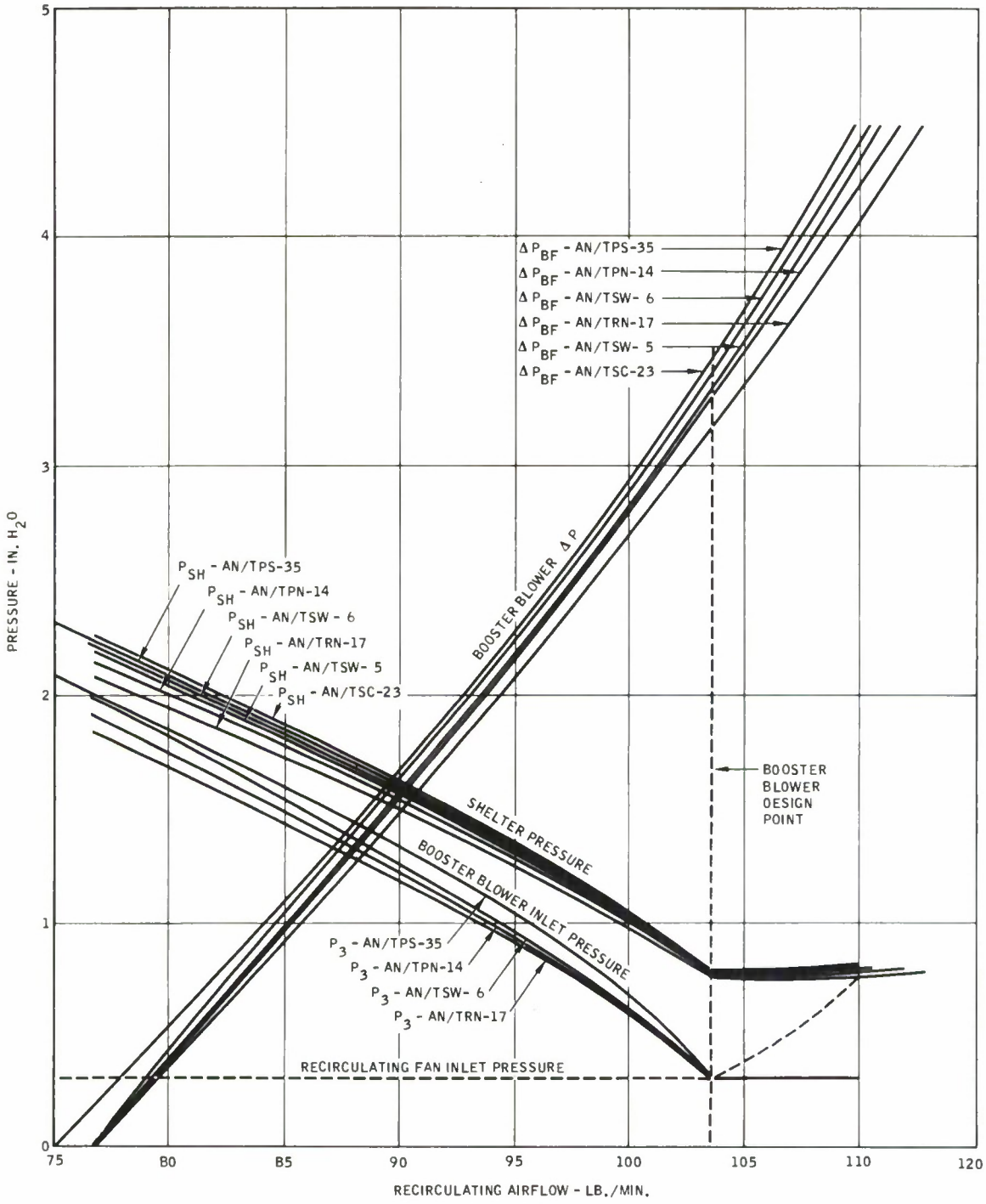

Figure 9. Shelter System Characteristics

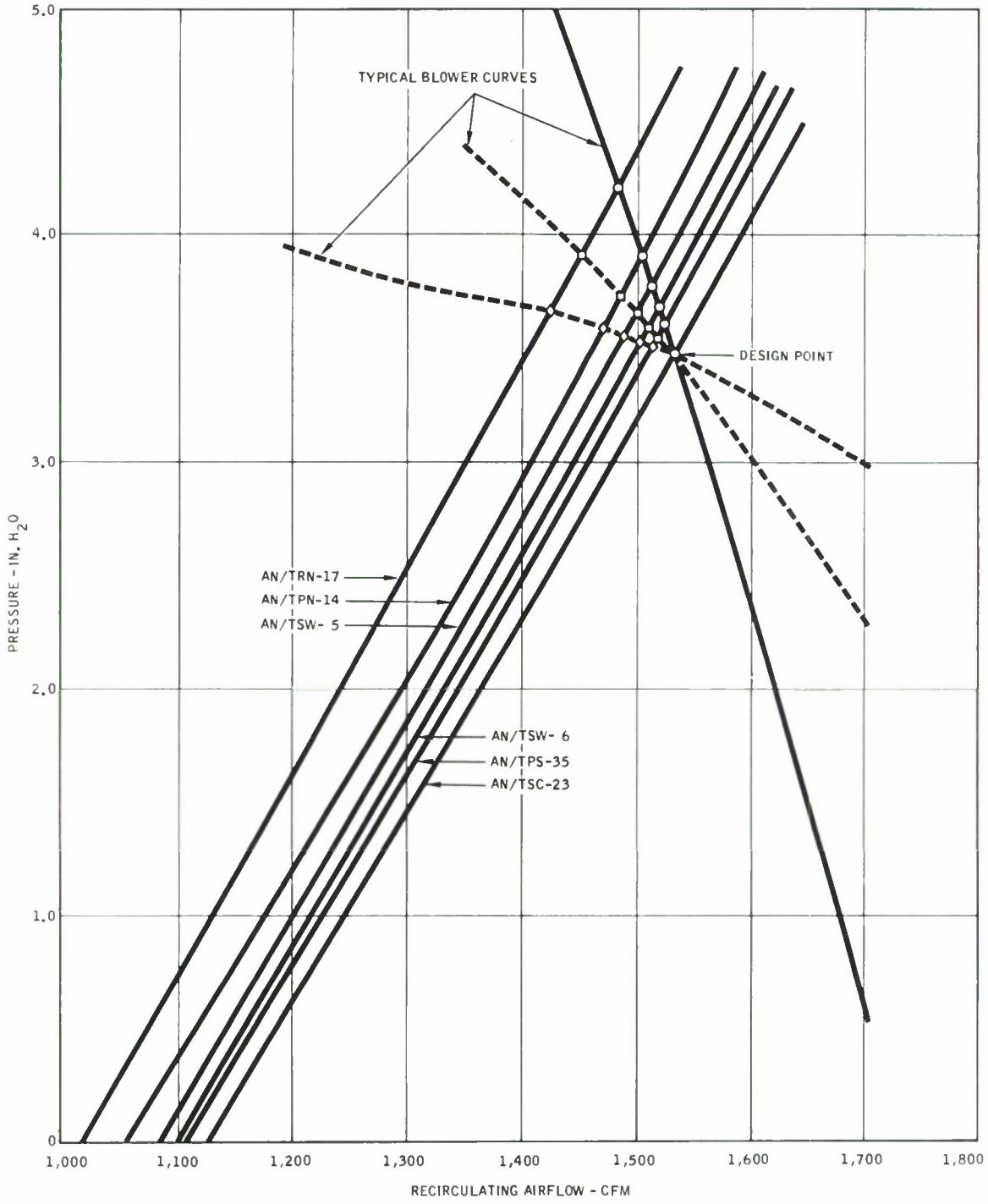

Figure 10. Booster Blower Pressure Rise Versus Airflow

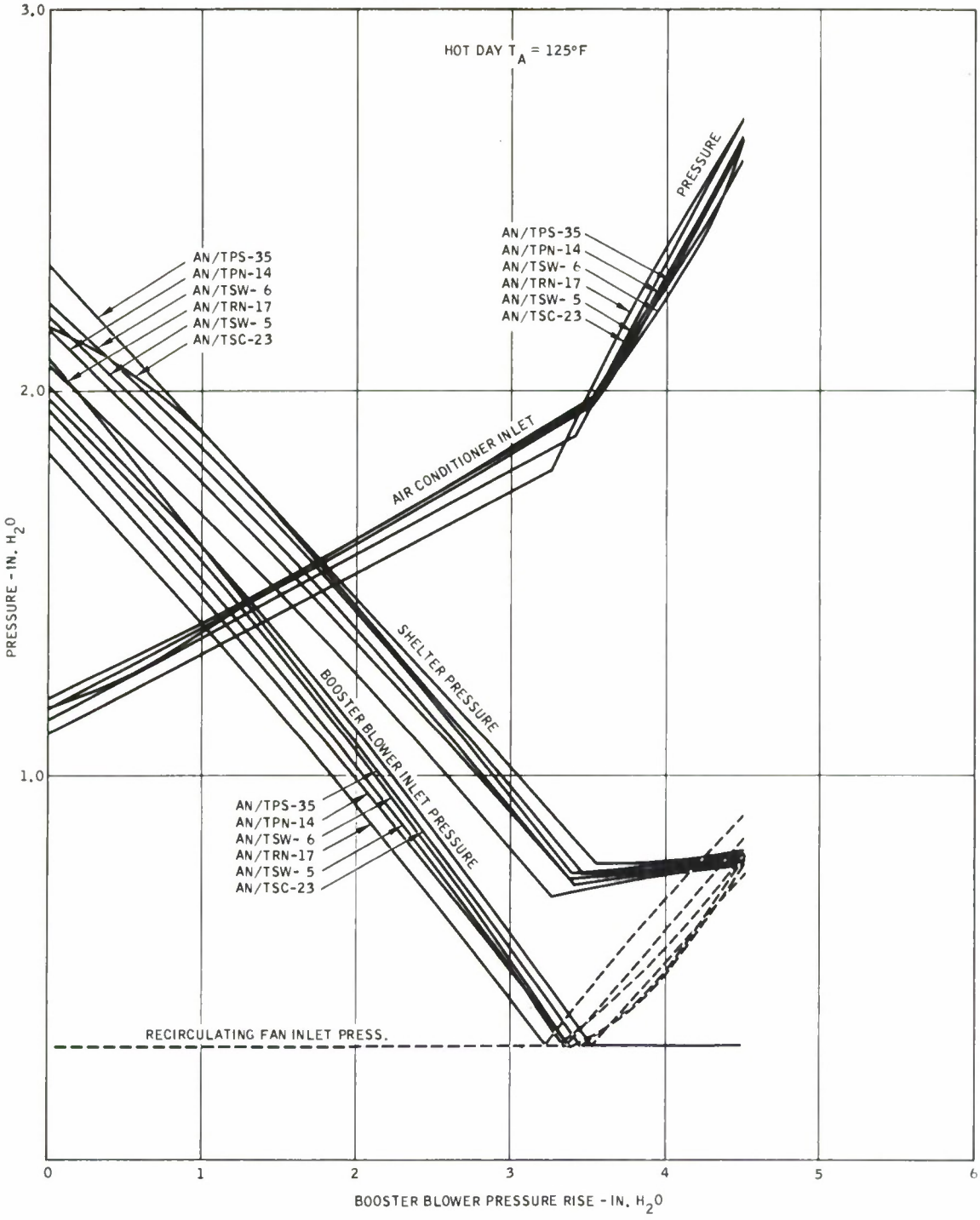

Figure 11. Shelter System Pressures

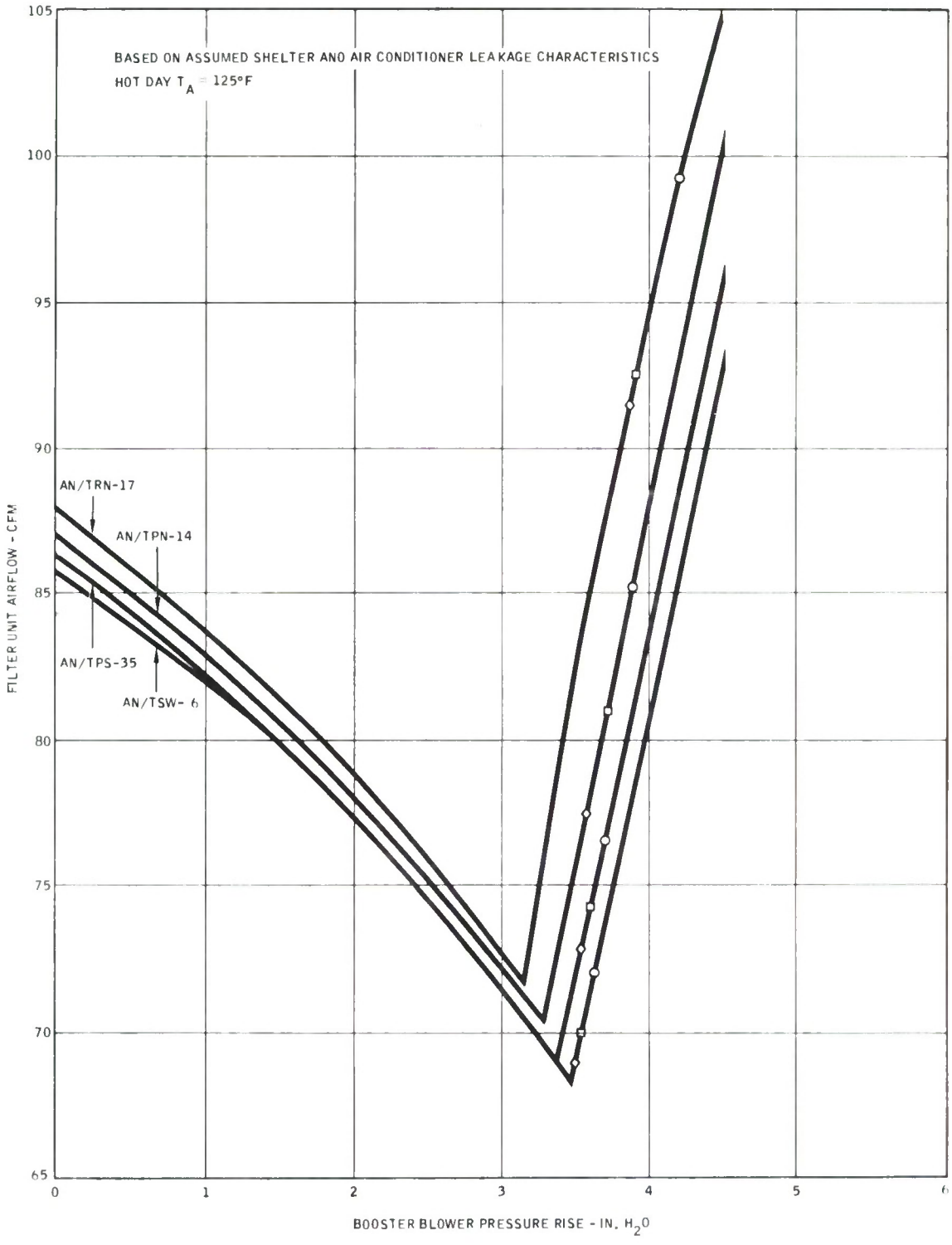

Figure 12. E46R7 Filter Unit Airflow to Shelter System — One A/C Shelters

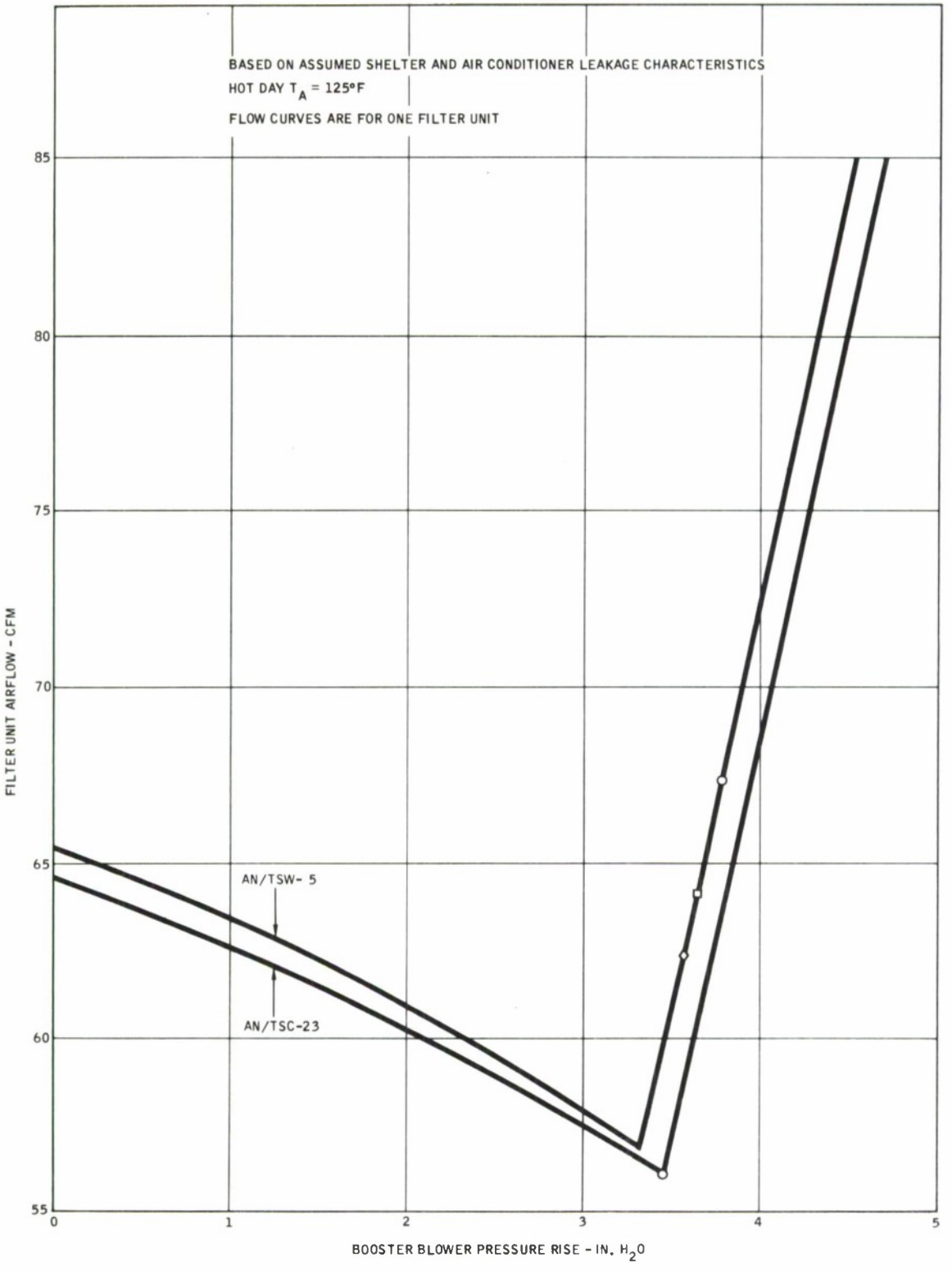

Figure 13. E46R7 Filter Unit Airflow to Shelter System — Two A/C Shelters

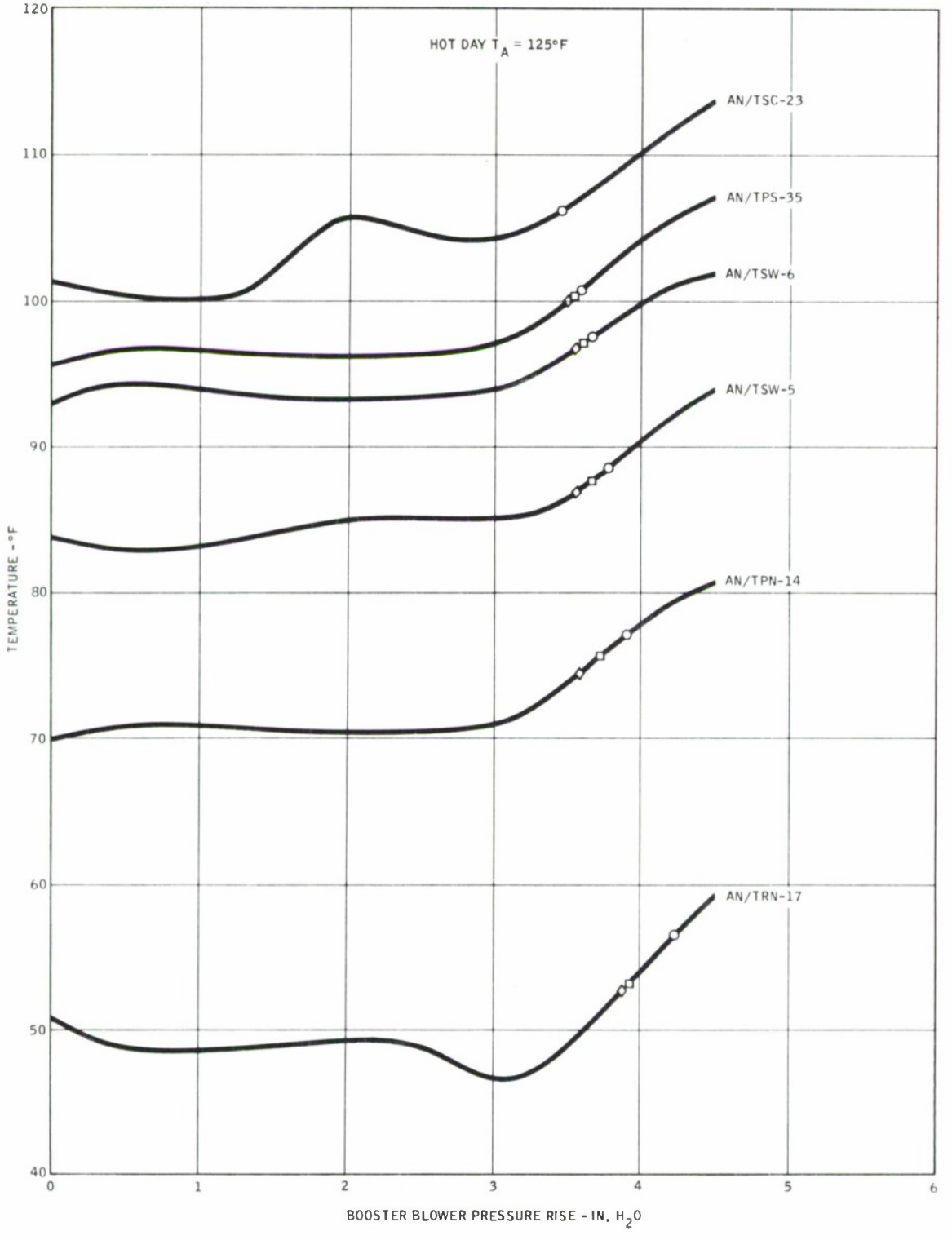

Figure 14. Hot Day Shelter Temperatures

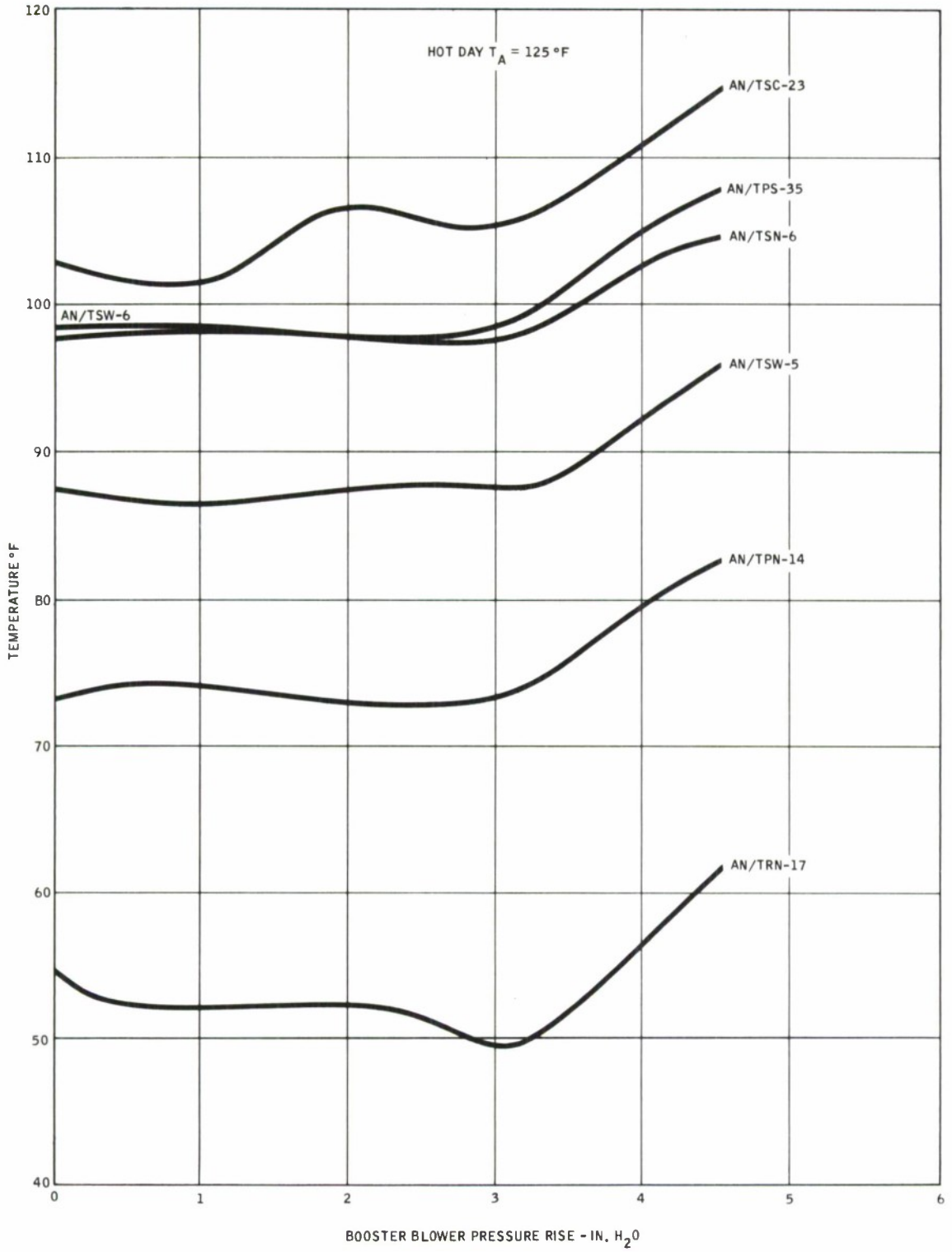

Figure 15. Electrical Equipment Inlet Temperature

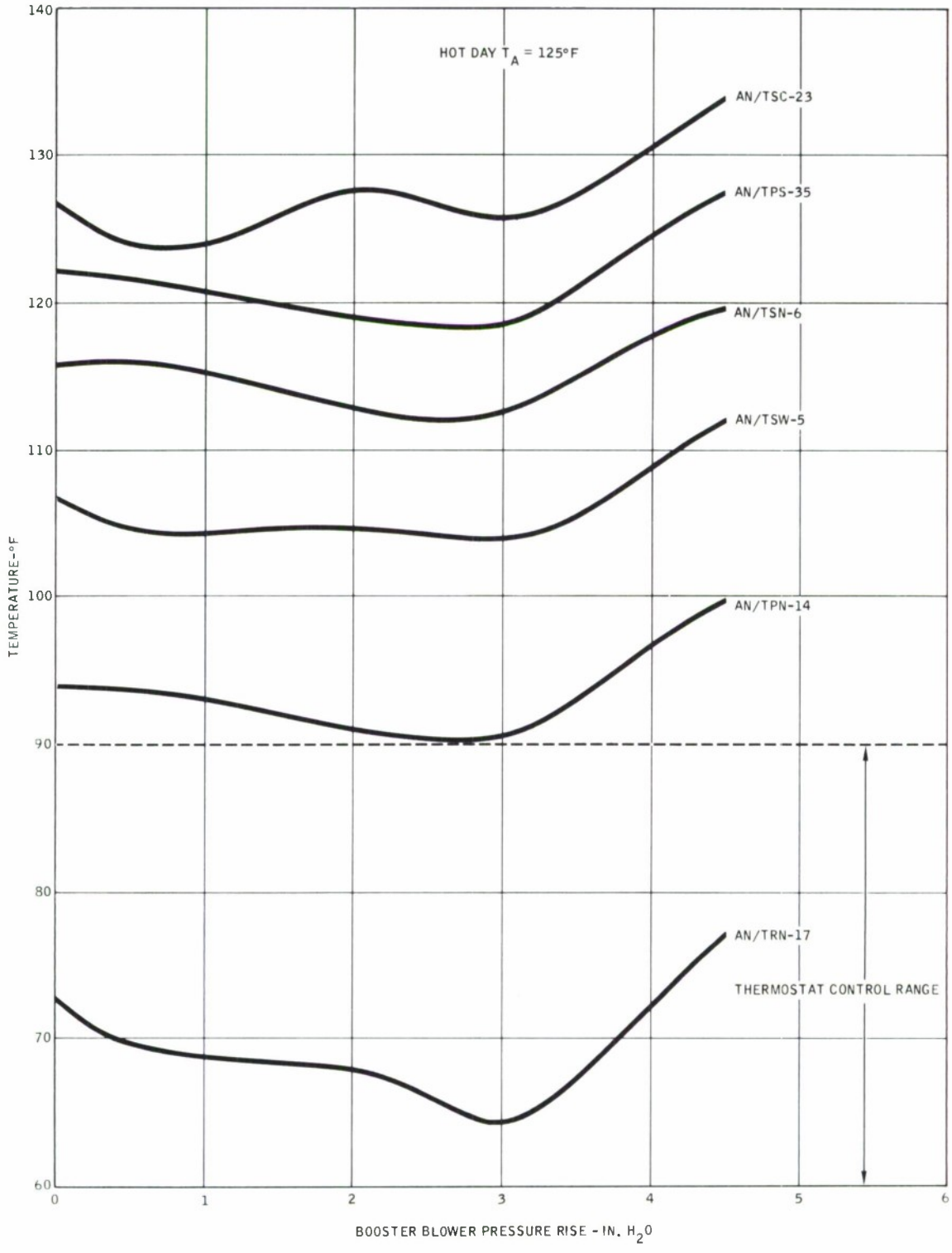

Figure 16. Air Conditioner Inlet Temperature

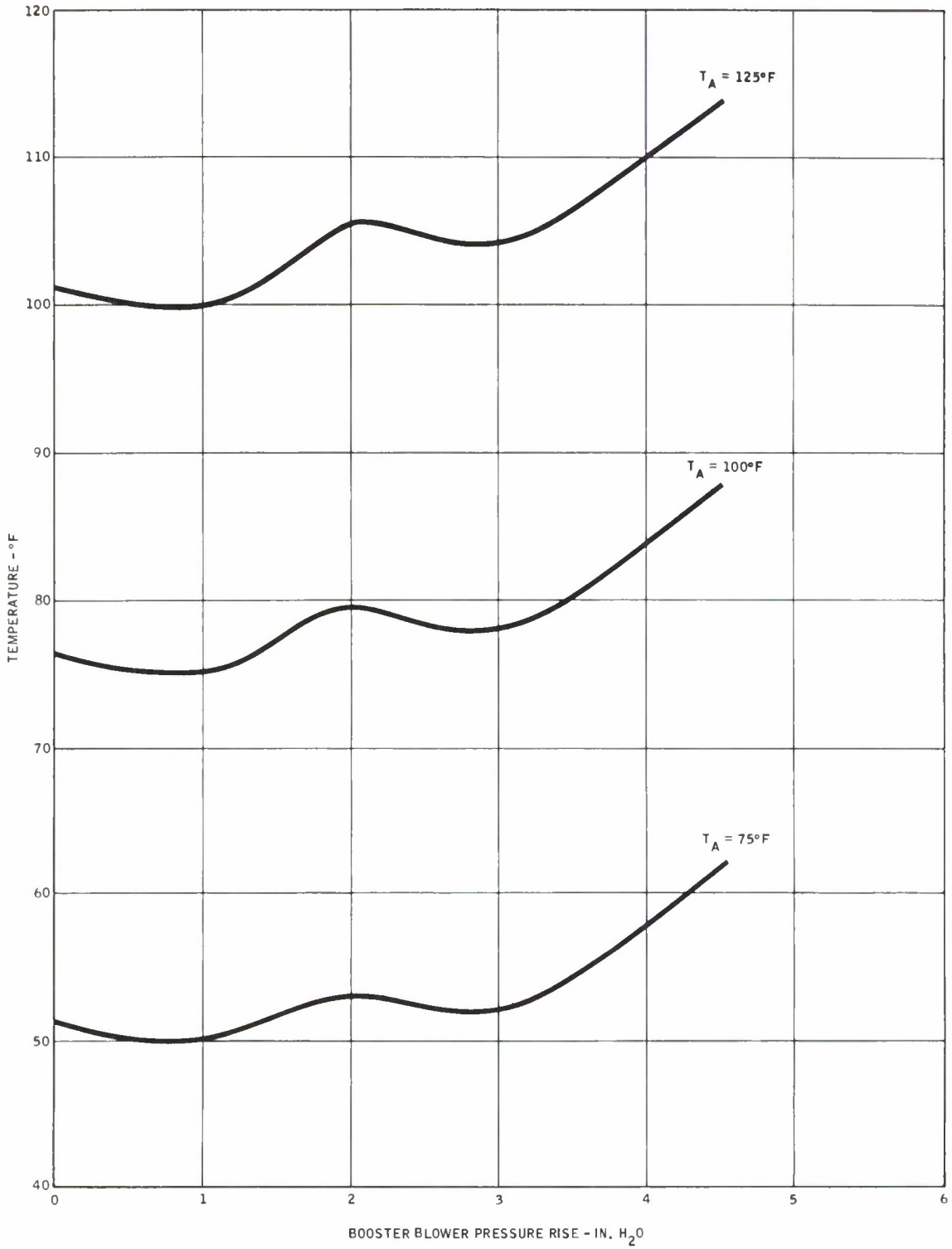

Figure 17. AN/TSC-23 Shelter Temperature

the minimum pressure in the recirculation system, and shelter pressure will decrease from approximately 2.25 to 0.8 in. of water gage. Air conditioner cooling capacity will increase from approximately 31,430 to 35,300 BTU/hr. with the 76 to 110 lb./min. recirculating airflow increase as shown by Figure 6. Without a booster blower, the minimum pressure in the recirculation system is at the recirculating fan inlet and when this minimum pressure is maintained at 0.3 in. of water gage, the shelter pressure is more than 2 in. of water gage as shown in Figure 9. A shelter pressure of 2 in. of water gage is excessive because door loads will make entering or exiting through the protective entrance virtually impossible. A 2-in. water differential across a 3 by 6-ft. door imposes a total load of over 180 lb. that must be overcome either in opening or closing the door. Figure 9 shows that shelter pressure is minimum at a recirculating flow of 103.6 lb./min. or a booster blower pressure rise from 3.15 to 3.45 in. of water, depending upon the shelter.

In Figure 10, the booster blower pressure rise of each shelter is plotted versus the recirculating airflow in cubic feet per minute to allow selection of a booster blower design point. A booster blower with flow-pressure rise characteristics equal to or greater than the Figure 9 design point is required. To select a booster blower that will maintain minimum shelter pressure in each of the six shelters, the shelter with maximum booster blower pressure rise at the 103.6 lb./min. design point in Figure 9 is selected and the design point is plotted on the appropriate Figure 10 curve. Typical blower performance curves are passed through the design point and the operating point of each shelter will be where this curve intersects the shelter curve. The selected design point is correct if the flow at each shelter operating point is equal to or greater than 103.6 lb./min. point in Figure 9. From the Figure 10 design point, a blower that will pass 1,535 cfm of air with a 0.0675 lb./cu. ft. density through a pressure rise of 3.45 in. of water is required, and the blower performance curve with the least slope at the design point will cause the least pressure rise change between shelters.

Shelter pressures are plotted versus booster blower pressure rise in Figure 11 to show more clearly the booster blower effect on system pressures. This figure shows minimum shelter pressures where the booster blower inlet pressure becomes the minimum pressure in the system. The air conditioner inlet pressure curves are shown in this figure to indicate CBR filter unit pressure rise requirements without a booster blower. As shown by Figure 1, without a booster blower, the CBR filter unit air is introduced at the air conditioner inlet. To maintain a minimum recirculating system pressure of 0.3 in. of water gage at the recirculating fan inlet, Figure 11 shows that the CBR filter unit air must be introduced at a pressure of from 1.1 to 1.2 in. of water gage. With a booster blower connected as shown in Figure 8, CBR filter unit air can be introduced at the booster blower inlet where the minimum recirculation system pressure is 0.3 in. of water when the booster blower pressure rise is at least 3.45 in. of water.

Figures 9, 10 and 11 include curves for one air conditioner of the two-air-conditioner shelters (AN/TSW-5 and AN/TSC-23 shelters). Actual flow through the two-air-conditioner shelters is double that shown for one air conditioner. The two-air-conditioner shelter analysis was made assuming that a booster blower and E46R7 filter unit will be required for each air conditioner.

5.4.3 FILTER UNIT REQUIREMENTS — The E46R7 filter unit airflow to the one- and two-air-conditioner shelter systems is shown in Figures 12 and 13 respectively. Filter unit flows are the summation of air conditioner and shelter leakage flows calculated from the assumed leakage characteristics. The Figure 13 flows are for only one of the two filter units and are equal to leakage flow from one air conditioner plus one half the shelter leakage. Figures 12 and 13 show that filter unit flow decreases as the booster blower pressure rise increases until the booster blower inlet pressure is equal to the minimum pressure in the recirculation system, and then increases with booster blower pressure rise. The flow drop is due to shelter leakage while the rapid increase above the minimum shelter pressure point is due to air conditioner leakage. Circled points in Figures 12 and 13 show

filter unit flow requirements where typical blower curves match shelter system losses in Figure 10.

The Chemical Corps recommends a minimum personnel ventilation requirement of 10 cfm per person. From Table V, 30 cfm (10 cfm x 3 persons) is the maximum personnel ventilation required for the shelter system filter unit flows shown in Figure 12, and 45 cfm per filter unit (10 cfm x 9 persons = 90 cfm total) is the maximum ventilation required for shelter system filter unit flows shown in Figure 13. Figures 12 and 13 show that the filter unit airflows required to overcome system leakages are well in excess of personnel fresh air requirements.

5.4.4 SHELTER TEMPERATURE — Figures 14 through 17 show shelter system temperatures. Hot-day shelter temperature variation with booster blower pressure rise is shown in Figure 14. This figure shows that the booster blower heat load does not significantly increase shelter temperature until the booster blower design point is reached. Typical booster blower performance points are shown on these curves. The two air conditioner AN/TSC-23 shelter will have the highest temperature on a 125° F day. Figure 15 shows the temperature of the recirculating air entering the electrical equipment in each shelter. Figure 16 shows the temperature of the recirculating air entering each air conditioner on a 125° F day. The AN/TRN-17 shelter system is the only one with an air conditioner inlet temperature in the thermostat control range of a 125° F day. Figure 17 shows how ambient temperature affects the AN/TSC-23 shelter temperature.

5.4.5 FILTER UNIT AND ANTI-BACKDRAFT VALVE SELECTION — The shelter system analysis results in Figures 9 through 17, show that a booster blower is required to maintain reasonable shelter pressures (0.7 to 0.8 in H_2O gage), temperatures, and filter unit airflows. With the Figure 8 booster blower installation, the filter unit can be located near the shelter and protective entrance where short ducts can be used and the filter unit flow to the shelter system can be introduced at the minimum pressure in the recirculation system.

Figure 18 shows the airflow characteristics of the E46R6 filter unit fan. Included are the characteristics of a fan that will increase the external pressure rise of the filter unit approximately 2 in. of water at 300 cfm. Figure 19 shows the airflow characteristics of the E46R6 filter unit, and includes the characteristic with the modified fan. The cylindrical protective entrance proposed for the shelter system requires a purge flow of 200 cfm, and should be pressurized to 0.6 in. of water gage when the shelter is maintained at from 0.7 to 0.8 in. of water gage (Figure 9 design point). Allowing 0.4 in. of water duct loss from the filter unit to the protective entrance, then the E46R6 filter unit will deliver 284 cfm at 0.6 + 0.4 or 1.0 in. of water gage with the existing fan and 303 cfm at the same pressure with the modified fan, as shown by Figure 19. This leaves either 84 or 103 cfm available for the shelter system. Figures 12 and 13 show that 84 cfm is more than enough flow for all but the AN/TRN-17 and AN/TPN-14 shelters, while 103 cfm will satisfy all shelter leakage flow requirements. Although E46R6 filter unit performance with the modified fan is indicated, its requirement cannot be established until final booster blower design characteristics and system leakage characteristics are known.

Figure 12 and 13 airflows are based on assumed shelter and air conditioner leakage characteristics considered to be within 10% of actual leakage. Tests should be conducted to verify assumed leakage characteristics. If leakages are less than shown in Figures 12 and 13, an anti-backdraft valve is required to allow adjustment of leakage flows to the desired value. Theroretically, the anti-backdraft valve is not required if normal system leakage is adequate. Actually, the valve would be required just to allow adjustment for the variation of leakage characteristics in identical shelters. The anti-backdraft valve must be sized to pass from 0 to 100 cfm over a range of shelter pressures of 0.7 to 0.8 in. of water gage. The E31 anti-backdraft valve as shown in Figure 20 has flow characteristics similar to the desired requirement. However, the valve will have to be modified to shift the counterweight adjustment from a 0.5 to 0.6 in. of water gage pressure range to a 0.7 to 0.8 in. of water gage pressure range.

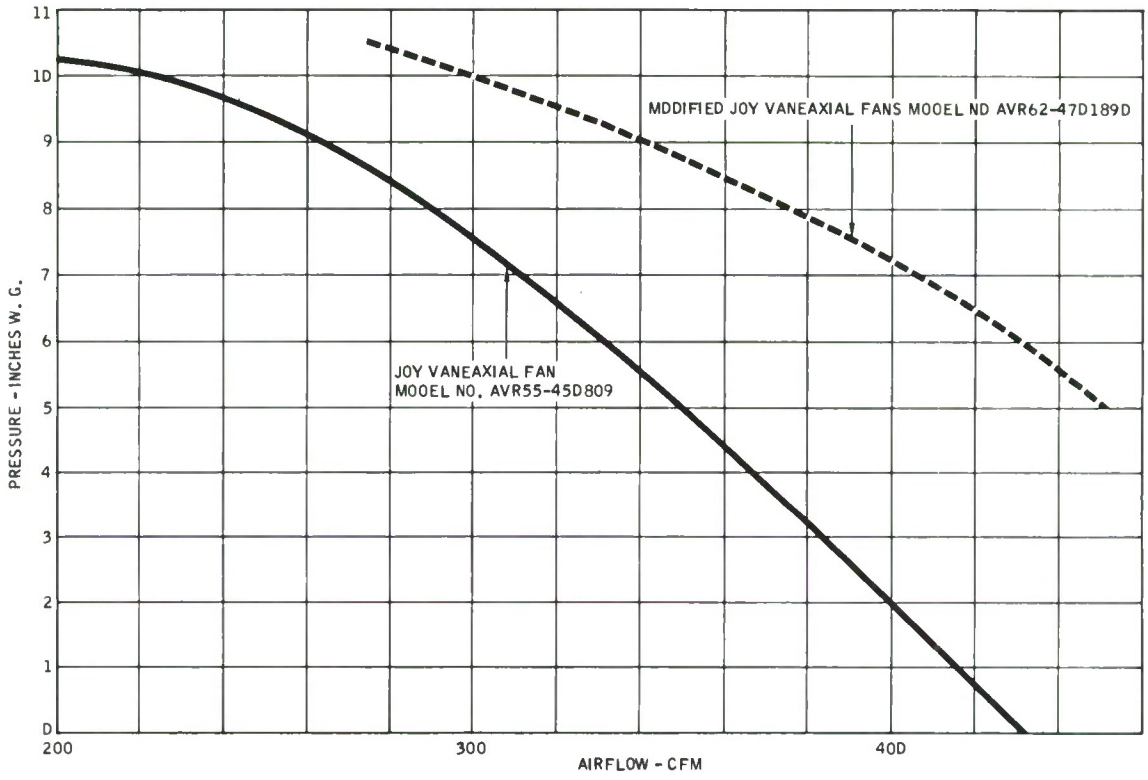

Figure 18. Airflow Characteristics-E46R6 Filter Unit Fan

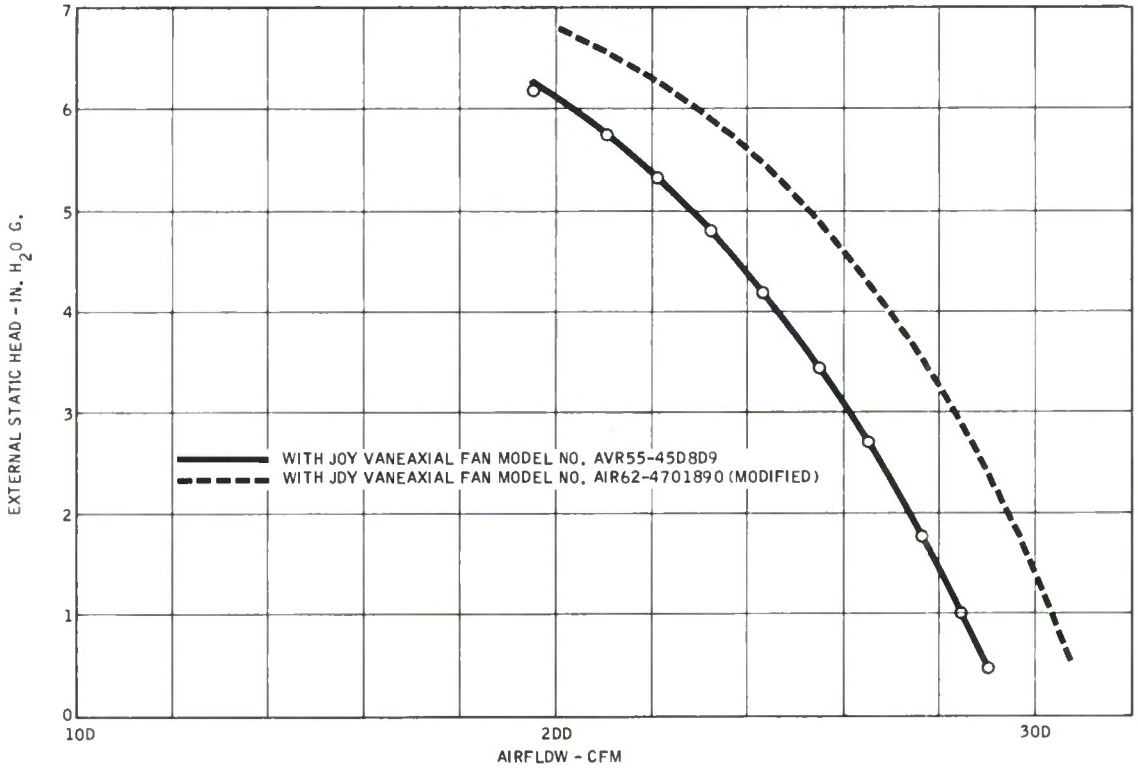

Figure 19. E46R6 Filter Unit Characteristics

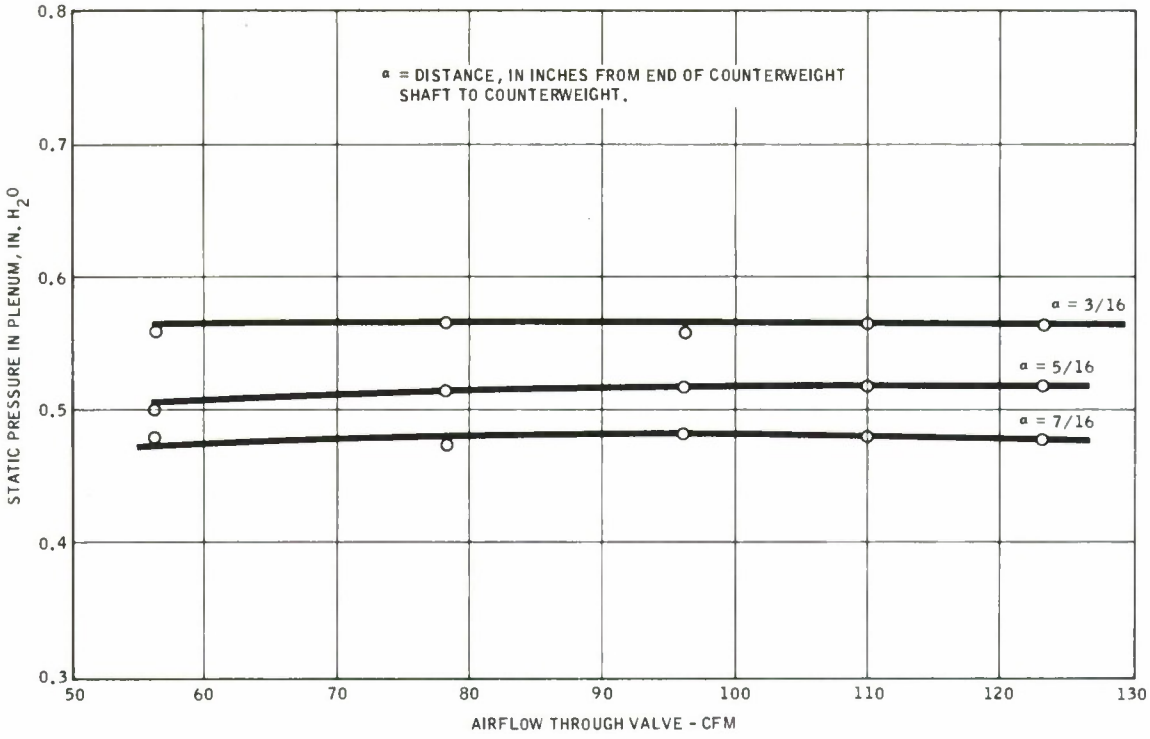

Figure 20. Performance Characteristics of Anti-backdraft Valve, E31

SECTION 6 | SELECTED CBR PROTECTION DESIGN

CBR protection components have been selected for the AN/TSQ-47 system shelters based on the requirements for Category A CBR protection and a shelter system pressure and temperature analysis. Performance requirements of some components are based on assumptions that should be checked by test. The performance requirements of these components may be changed by the test results, so consideration was made for the possible performance change in selecting the components. None of the selected components can be considered standard items because modifications are required to adapt them to AN/TSQ-47 shelter systems. CBR protection components selected for the AN/TSQ-47 shelter systems are:

a. One E46R7 filter unit per air conditioner with two sections of 4-in. nominal diameter flexible ducting per filter unit.

b. One short Q-38 protective entrance system per shelter entrance.

c. One booster blower unit per air conditioner and one section of 10-in. nominal diameter insulated flexible ducting per booster blower unit.

d. One E31 anti-backdraft valve per shelter.

e. One shelter control panel per shelter, including electrical cable and tubing to control CBR system.

Performance and test requirements, selected components and shelter system modifications are described in the following paragraphs.

6.1 PERFORMANCE REQUIREMENTS

AN/TSQ-47 shelter system performance with CBR protection components and the performance requirements of the CBR protection components can be defined based on the results of the shelter system analysis. Shelter system operation and performance as well as the performance requirement of each component is described in this section.

6.1.1 SHELTER SYSTEM OPERATION AND PERFORMANCE — A typical AN/TSQ-47 shelter system should be set up as shown in the Figure 8 schematic. A control panel (not shown in the figure) is located in the shelter and contains, in addition to "off" "on" switches for the booster blower and filter unit, shelter and protective entrance pressure gages and indicator lights. When the initial installation is completed, the shelter recirculation system, booster blower unit, and CBR filter unit are turned on. With the system on, it is inspected for excessive leakage and, after leaks are sealed, the damper valves are adjusted to provide 0.3 in. of water static pressure at the inlet to the booster blower, and a static pressure of from 0.1 to 0.2 in. of water less than shelter pressure (0.7 to 0.8 in. of water) in the protective entrance with a 200-cfm flow to the entrance. The adequacy of the damper valve setting should be checked by observing the shelter pressure drop, if any, when the shelter door is opened. If the drop is greater than the static pressure set at the booster blower inlet (0.3 in. of water) the static pressure at the booster blower inlet must be increased so that it will not drop below outside ambient when the shelter door is opened. The shelter pressure gage can be used to check the booster blower inlet pressure by connecting a section of plastic hose from the gage to the sensing port on the booster blower. Airflow characteristic curves should be provided with the protective entrance so that the ports and damper can be adjusted to provide 200 cfm to the entrance without the use of flow measuring apparatus. The anti-backdraft valve should be adjusted to maintain shelter pressure based on the valve performance characteristics.

After the initial installation test, the filter unit and booster blower can be turned off and not used until CBR protection is required. Without the protection system on, the shelter system will operate as described in Paragraph 5.2.1. The recirculating air will bypass the non-operating booster blower via the swing check valve, as shown in Figure 8. The booster blower can be energized without the filter unit to increase the recirculating airflow and cooling or heating capacity if shelter air conditioning is not adequate.

When the selected CBR protection system is turned on shelter system performance should be as follows:

a. Recirculating airflow — 103 to 110 lb./min.

b. Filter unit flow to shelter system — 56 to 99 cfm.

c. Filter unit flow to protective entrance — 200 cfm.

d. Minimum static pressure in recirculating system at booster blower inlet — 0.3 to 0.5 in. H_2O.

e. Shelter static pressure — 0.7 to 0.8 in. H_2O.

f. Protective entrance pressure — 0.5 to 0.7 in. H_2O.

Recirculating airflows and filter unit flows to shelter system are double the preceeding values in the two air conditioner shelters.

6.1.2 COMPONENT PERFORMANCE REQUIREMENTS

6.1.2.1 CBR Filter Unit — This unit must deliver at least 300 cfm of filtered air at a outlet static pressure of one inch of water when the damper valves are wide open.

6.1.2.2 Booster Blower Unit — The booster blower unit must deliver 1,535 cfm of 0.0675 lb./cu.ft. density air at 3.45 in. of water static pressure rise from the shelter outlet to the outlet duct. The selected booster blower must deliver the required air at a static pressure rise of 3.45 in. of water, plus the added ducting and unit loss or an estimated maximum of 5 in. of water.

6.1.2.3 Anti-backdraft Valve — The anti-backdraft valve must be adjustable so that it will pass flows of 30 to 100 cfm at static pressures of 0.5 to 1.0 in. of water.

6.2 TEST REQUIREMENTS

6.2.1 PERFORMANCE REQUIREMENTS TESTS — Performance requirement tests should be conducted if it is found necessary to verify the assumptions used in the shelter system analysis. Specifically air conditioner leakage, shelter leakage, and shelter recirculating air pressure loss tests are the tests that should be conducted. The results of these tests may change component performance requirements.

6.2.1.1 Air Conditioner Leakage — Determine air conditioner leakage airflow versus recirculating fan inlet pressure as follows:

a. Block air conditioner inlet and outlet ports. Connect a 0-2 in. of water full-scale static pressure gage or water manometer to pressure ports located so that the static pressure at the inlet to the recirculating fan is measured. Connect a low pressure air supply to the air conditioner at the CBR port through a flow control valve and an airflow measuring apparatus, preferrably a calibrated flowmeter with a 0 to 100 or 200 cfm flow range. Vary the static pressure at the inlet to the recirculating fan from 0 to 1.0 in. of water gage in 0.2 in. of water increments and record the flow required to maintain each static pressure. Check for unnecessary leakage at the maximum static pressure, fix leaks if necessary, and repeat test.

b. An alternate procedure is to connect one 20-ft. section of the 10-in. du ducting to the air conditioner inlet and outlet, and operate the recirculating fan while conducting the preceeding test. If leakage measured is greater than 40 cfm at a recirculating fan inlet static pressure of 0.3 in. of water gage, leaks will have to be located and modifications made to reduce leakage.

6.2.1.2 Shelter Leakage — Determine leakage airflow from each shelter in the AN/TSQ-47 system as follows:

a. Connect a low-pressure air supply to the shelter recirculating air inlet through a flow control valve and calibrated flowmeter. Block all shelter outlets that normally will not leak air. Connect a pressure gage or water manometer to the shelter so that shelter static pressure is measured. Vary shelter static pressure from 0 to 2 in. of water in 0.5-in. increments with flow control valve and record flow at each pressure point.

b. If shelter leakage flow is greater than 25 cfm at one inch of water static pressure, locate principal leaks and modify shelter as required to minimize leaks.

6.2.1.3 Shelter Pressure Drop — Determine the pressure drop from the shelter recirculating air inlet to outlet versus recirculating airflow for each shelter as follows:

a. Install static pressure taps at the shelter inlet and outlet ports, and connect pressure gages or manometers to these taps. Connect a low-pressure air supply to the shelter inlet port through a flow control valve and flow meter and open the shelter outlet port. When testing shelters with one air conditioner, vary the recirculating airflow from 50 to 120 lb./min. in 10 or 20 lb./min. increments and at each incremental flow point record the inlet and outlet static pressure. When testing shelters with two air conditioners, vary the airflow from 100 to 240 lb./min. in 40 lb./min. increments and record static pressures at each increment.

b. If the static pressure drop is greater than one inch of water at 110 lb./min. flow through the one-air-conditioner shelters or at 220 lb./min. flow through the two-air-conditioner shelters, additional testing will be required to locate the shelter pressure losses and to reduce the pressure losses. If the pressure drop is less than one inch of water at the same flows, booster blower performance can be reduced.

6.2.2 QUALIFICATION AND ACCEPTANCE TESTS — The qualification and acceptance tests specified for the AN/TSQ-47 system will be performed on the CBR protection components unless it can be shown that the components already have passed similar or acceptable tests. Chemical Corps Procurement Descriptions require only performance and shipping tests. Since each of the selected CBR components will require some modification for the AN/TSQ-47 system, complete qualification and acceptance tests must be performed. Performance tests must include tests that ensure compliance with the requirements defined in Paragraph 6.1.

6.3 CBR PROTECTION COMPONENTS

Selected CBR protection components are described in the following paragraphs.

6.3.1 E46R7 CBR FILTER UNIT

6.3.1.1 Present Unit Description — Filter unit, gas-particulate, EMD, 300 cfm, E46R7, defined in Reference 6 is a collective protector for the removal of toxic gases and aerosols from the atmosphere. The filter element uses two banks, each containing one 150-cfm particulate filter and one 150-cfm gas filter. The banks operate in parallel providing a total air flow of 300 cfm. The unit is equipped with a prefilter and is covered with an aluminum skin for weather protection and appearance. The aluminum blower (Joy Vaneaxial Fan, Model No. AVR55-45D0809) is powered by a 0.7 hp (0.7 x 0.746 = 0.52 kw) 416v, 3-phase, 400-cycle, ac motor; it is rated at 300 cfm at a static head of 8-in. of water gage. The discharge is equipped with damper flow control valves that control the filtered air output to each of the two separate filter air supply hoses. Approximate overall deminsions of the collective protector are 40 in. wide, 24 in. deep, and 16 in. high. Over-all weight is estimated at 160 lb.

6.3.1.2 Filter Unit Modifications — Figure 19 shows that the present E46R7 filter unit blower will deliver from 289 to 286 cfm at delivery pressures from 0.5 to 0.8 in. of water gage, or approximately 10 to 15 cfm less than the requirement. Also it is predicted that the E46R7 filter unit, with modified blower, will

deliver from 308 to 305 cfm at delivery pressures from 0.5 to 0.8 in. of water gage, or approximately 8 cfm more than the requirement. Thus, Figure 19 shows that the modified blower is required for the E46R7 filter unit. The modified blower is required for the E46R7 filter unit. The modified blower is a Joy Vaneaxial Fan, Model No. AVR62-47D1890, modified to deliver 300 cfm at a static head of 10 in. of water gage with a 1-hp (0.746 kw), 120/208-volt, 3-phase, 400-cycle ac motor. This fan weighs 8.5 lb. Since this fan is slightly larger than the present unit, the filter unit will have to be modified. There is adequate space for the new fan but detailed filter unit drawings were not available to work out the modification.

If shelter system leakage and pressure loss characteristics are found by test to be less than assumed in this study, the filter unit flow requirement may decrease to where the present blower is adequate. In this case, the present blower motor will have to be changed from a 416 volt to 115/208v, 3-phase, 400-cycle motor.

It is recommended that the electrical circuit in the E46R7 unit be modified to the circuit, described in Paragraph 6.3.5.1. A circuit breaker, fuses, manual switch, and remote control receptacle will be added to the existing main power receptacle and pressure switch by this modification. The modification is required to allow the direct connection of power from a separate power distribution panel and the addition of remote filter unit control.

6.3.1.3 Damper Control — Automatic damper control was considered for the two outlets of the E46R7 filter unit and found to be too expensive for the slight operational advantage. Automatic damper control has the primary advantage of compensating for pressure losses that increase with operating time. A pressure loss increase that would require a significant change in damper setting during an operating time period is not anticipated because 48 hours is the longest predicted continuous protection period and the filters are designed for the equivalent of 200 mass attacks. Automatic damper control components such as described in Reference 3 are designed for 110-volt, 60-cycle ac operation.

6.3.1.4 Flexible Ducting — Four-inch nominal diameter flexible ducting is required to connect CBR filter unit air to the shelter recirculation system and the protective entrance. Figures 21 through 28 show plan views of the AN/TSQ-47 shelter systems with the required CBR protection components. Components are essentially to scale and the filter unit was located to minimize protective entrance duct loss. With the filter units located as shown in these figures, 10 ft. of the 4-in. ducting is required to supply filter unit air to the protective entrance; 15 ft. of the same ducting is required to supply filter unit air at the booster blower inlet of the shelter recirculation system. Ten feet of 4-in. flexible duct similar to the 10-in. ducting was estimated to have a pressure drop of approximately 0.1 in. of water with 200 cfm of air flowing; thus, the filter unit location is not critical with respect to protective entrance duct loss. However, the protective entrance pressure is the higher of the two pressures maintained by the filter unit; therefore, this pressure will size the blower motor in the filter unit.

6.3.2 PROTECTIVE ENTRANCE SYSTEM — The Q38 or short protective entrance system designed by Hughes Aircraft Co., Fullerton, California, for the Missile Monitor System is recommended for AN/TSQ-47 system shelters. The Q38 protective entrance was selected because it can be rapidly assembled and disassembled, is less bulky and lighter than the rectangular protective entrance, and is the latest design with a Chemical Corps Standard A classification. As shown in Figure 3, the Q38 protective entrance is a dual cylindrical design coupled to the shelter entrance, and supported from a single point on top using a cantilevered support attached to the shelter. The dual cylinder is a fabric assembly constructed of neoprene-coated nylon fabric, cotton duck, and cotton webbing. The fabric assembly can be folded into a shape approximately 24 x 14 x 11 in. and weighs approximately 25 lb. A coupling or transition piece permanently attached to the shelter around the entrance allows rapid zipper connection between the protective entrance and shelter. The cantilevered support includes a pulley for raising the protective entrance into position.

The dual-cylinder protective entrance design encloses an inner and outer compartment. Doors consisting of crescent-shaped openings secured by a zipper provide access to the shelter via the outer and inner compartments. The compartments are purged with filter unit air delivered to the top of the inner compartment. The filter unit air is evenly distributed across and down the inner compartment by diffusion through a false ceiling of cotton poplin. Part of the total purge flow enters the outer compartment via a port near the top of the partition between compartments. Purge or scavenging air leakage ports are provided around the periphery near the bottom of both compartments. Each port is adjustable and covered with gusseted flaps on the outside to protect against backdrafts. An opening also is provided in the side of the inner compartment for ejecting contaminated clothing. Protective entrance pressure is regulated by adjusting these ports. For adequate purging, the Q38 entrance requires 200 cfm of filter unit air and has been operated with static pressures as high as 3 in. of water gage without damage.

An early assembly of the protective entrance was installed by one person in six minutes. With the door frame coupling and cantilever support beam installed on the shelter as they would be when the system is deployed on site, the installation procedure consists of: (1) installing spreader bars in the fabric assembly, (2) hoisting and securing the fabric assembly to the support beam, (3) connecting the fabric assembly to the coupling, and (4) attaching the supply air duct. Tie-down stakes also are provided to hold the entrance in place under wind conditions.

Some shelter and/or protective entrance modifications will be required to attach the door frame coupling and the cantilever connector. Detailed modifications cannot be made because final shelter drawings are not available. However, modification problems and their solution can be described and suggested. The present door frame coupling consists of a 48 by 71 in. frame of aluminum angle, rubber gasketing, a zippered cloth flange, and CAMLOC fasteners to attach coupling to shelter. The coupling can be folded to a 75 x 18 x 3 in. space. CAMLOC

receptacles must be located around the door of each shelter approximately 7 in. apart on a 46.5 by 69.50 in. rectangle to mate with the coupling. Final shelter drawings are not available to determine whether or not there are holes or connections in the shelters that are located so as to interfere with the coupling installation. Figures 21 through 28, which show a plan view of the protective entrance attached to each shelter, indicate some of the coupling problems. Two possible arrangements are shown for the TSW-5 and TSC-23 shelters. It is assumed that only one of the two doors in the TSW-5 shelter will require a protective entrance. Figures 21, 25, 26, and 27 show that a coupling adapter is required for the TPS-35, TSW-6, and TSC-23 shelters. Figure 29 shows four possible commercial panel fasteners that could be utilized with the coupling adapters proposed in Figures 30 through 32. Figures 33 through 35 show several possible methods of installing the CAMLOC receptacle in the wall of the shelters not requiring an adapter. An airtight coupling and/or adapter is required for each shelter.

The cantilever design depends upon the method of shelter attachment, and the shelter attachment method depends upon the load-carrying capability of the shelter roof. As with the coupling, a cantilever and its method of shelter attachment cannot be designed because final shelter drawings are not available. However two possible designs are shown in Figures 36 and 37.

The Q38 protective entrance weighs 54 lb. without the support beam and occupies approximately 10 cu. ft. folded up. One support beam design weighs 25 lb.

6.3.3 BOOSTER BLOWER UNIT — The booster blower unit shown in Figure 38 has been designed to deliver 1,535 cfm of 0.0675 lb./cu. ft. density air at a 3.45 in. of water static pressure. As shown by the Figure 8 schematic, the required pressure rise is from the shelter outlet to the outlet duct which includes the pressure loss of the duct added to connect the shelter outlet to the unit. Blowers capable of delivering approximately 1,500 cfm of 0.0675 density air at

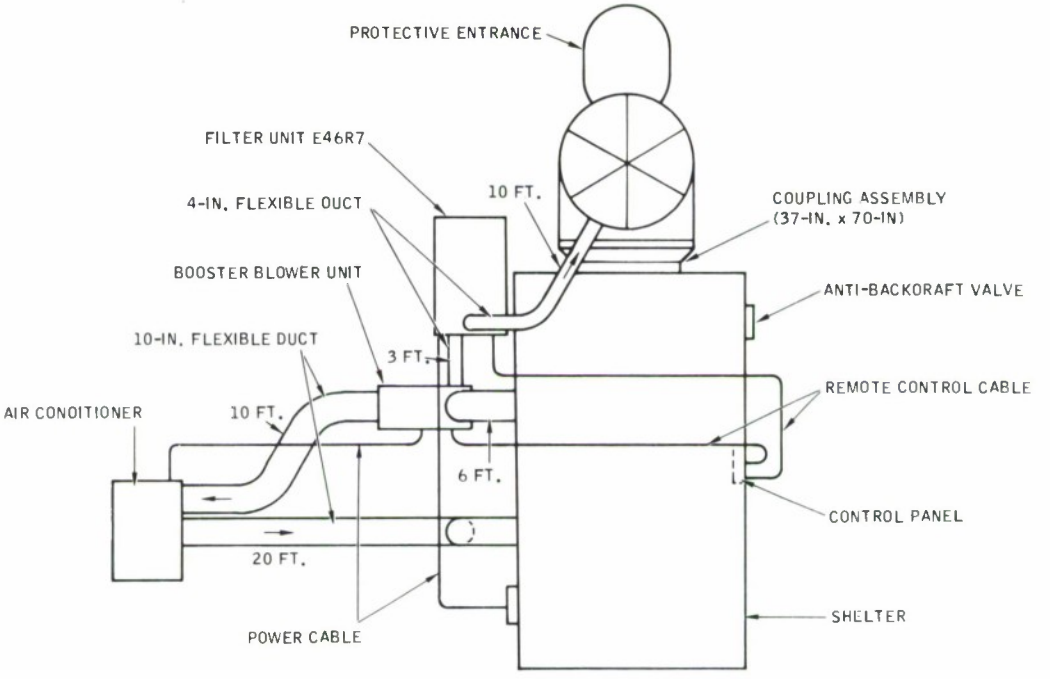

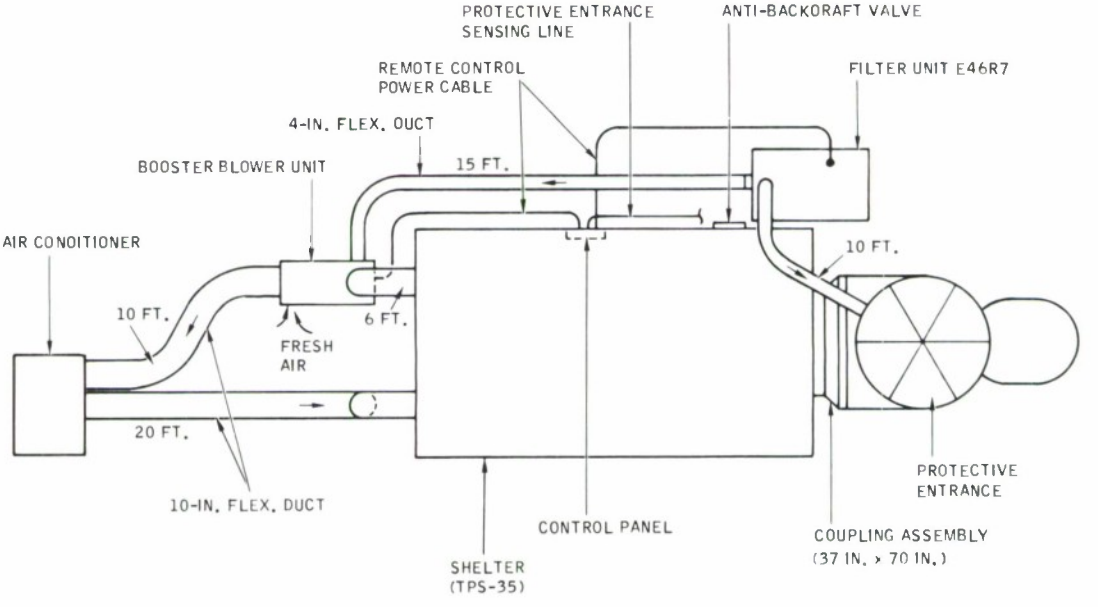

Figure 21. TPS-35 Shelter System Plan

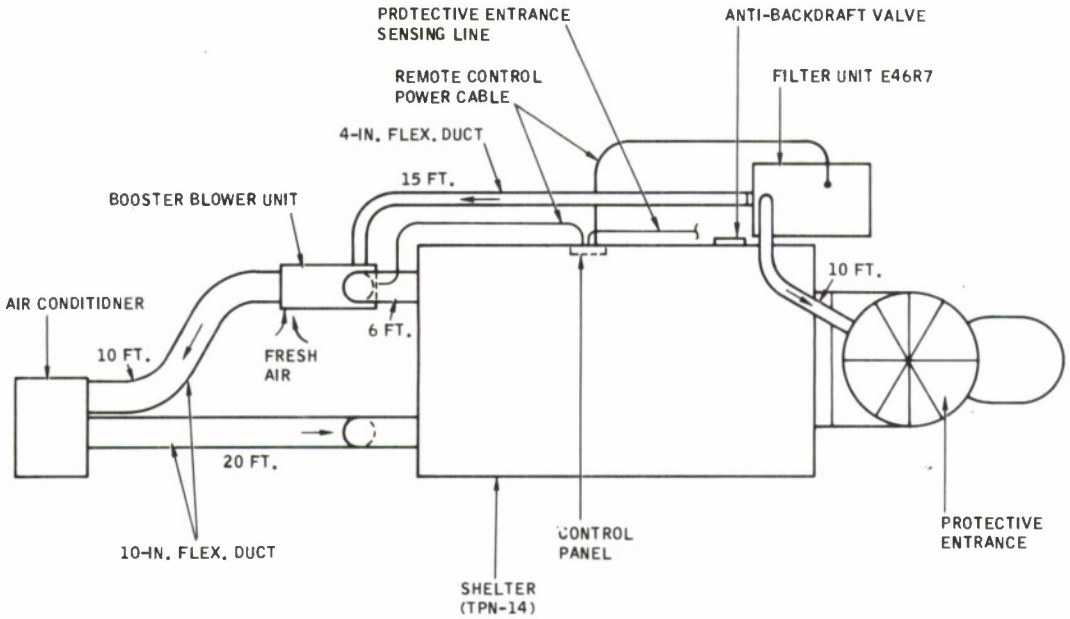

Figure 22. TPN-14 Shelter System Plan

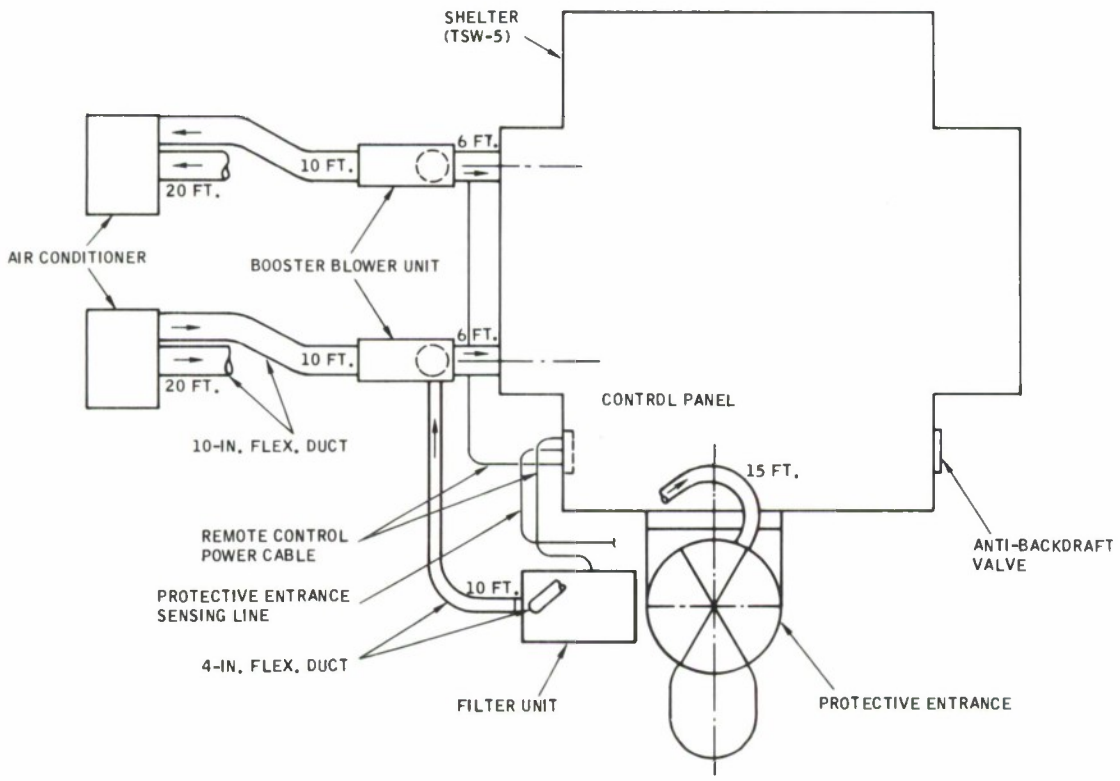

Figure 23. TSW-5 Shelter System Plan A

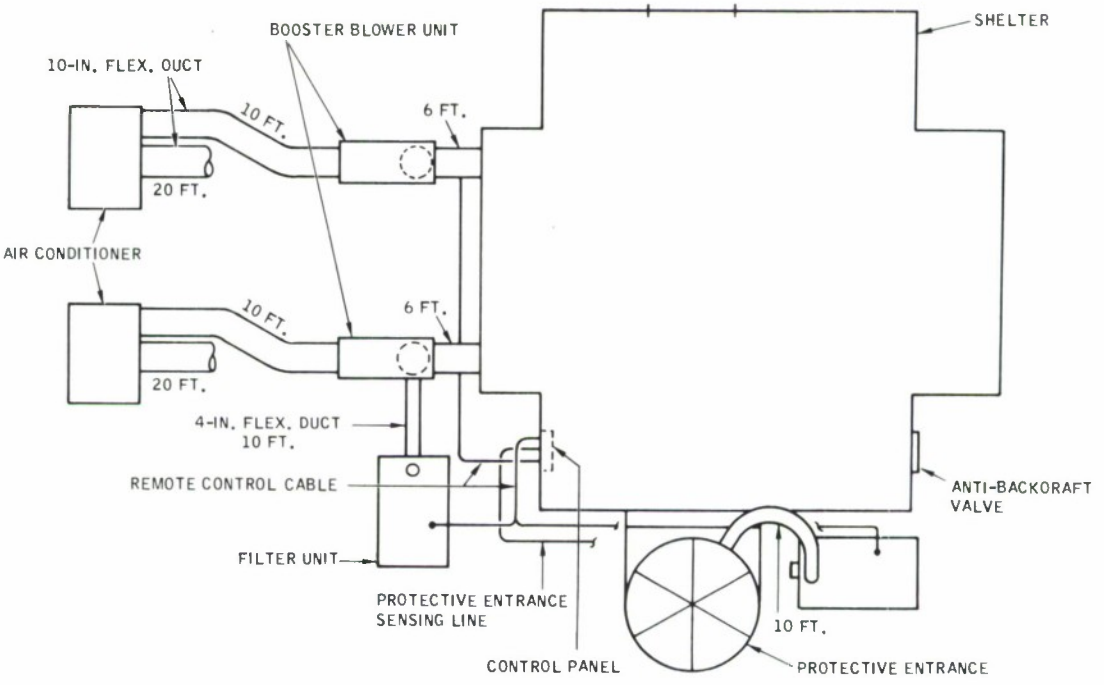

Figure 24. TSW-5 Shelter System Plan B

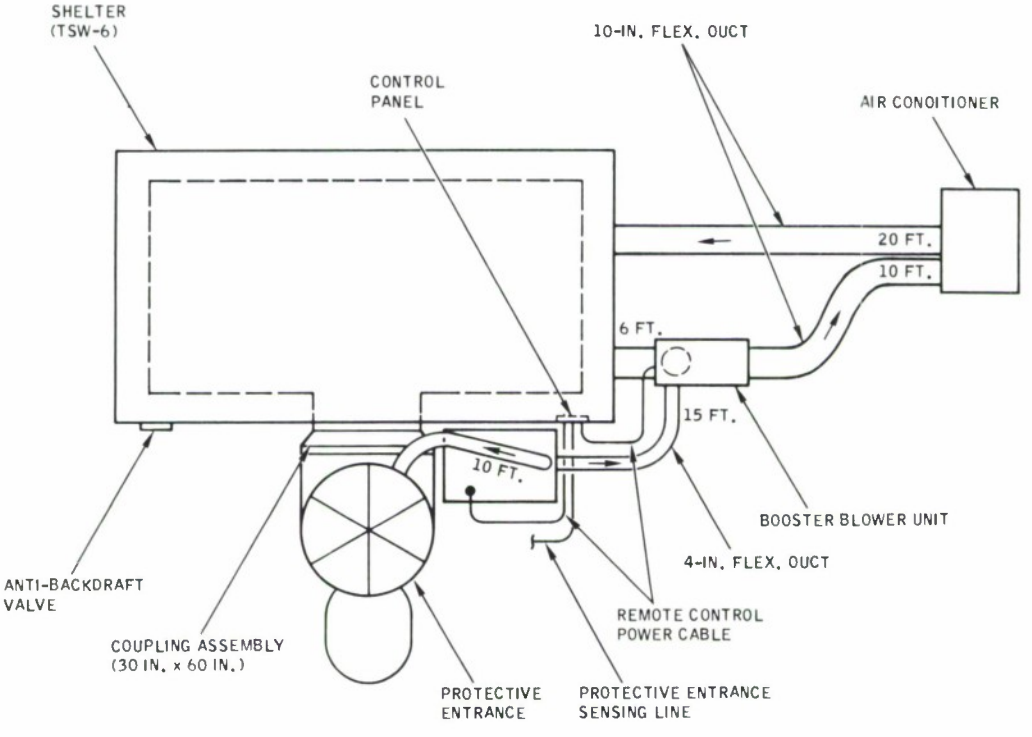

Figure 25. TSW-6 Shelter System Plan

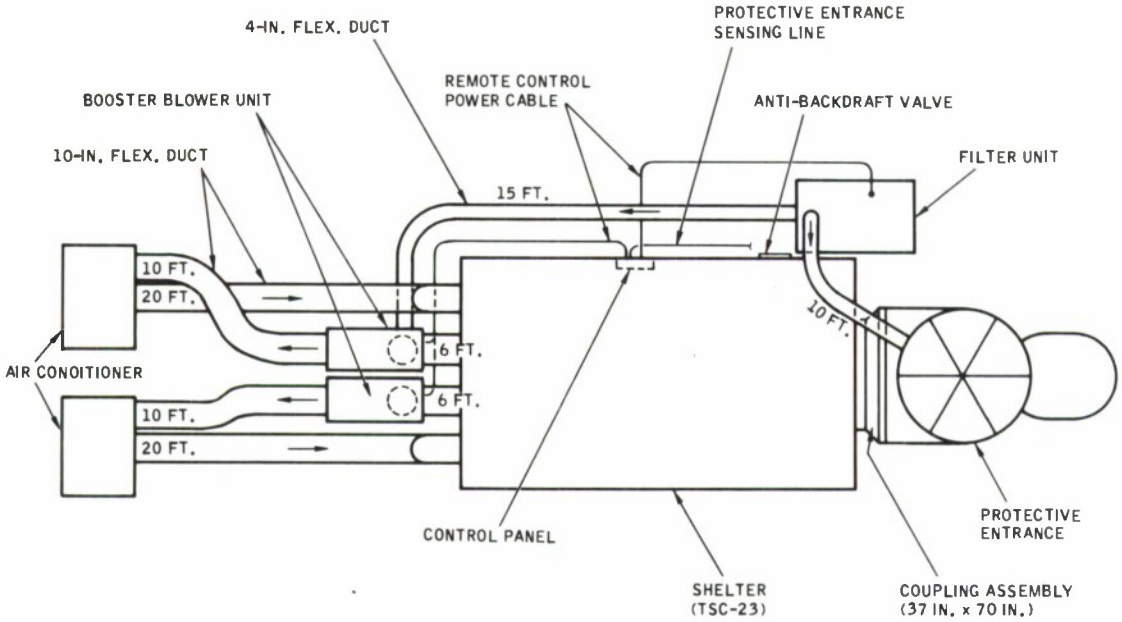

Figure 26. TSC-23 Shelter System Plan A

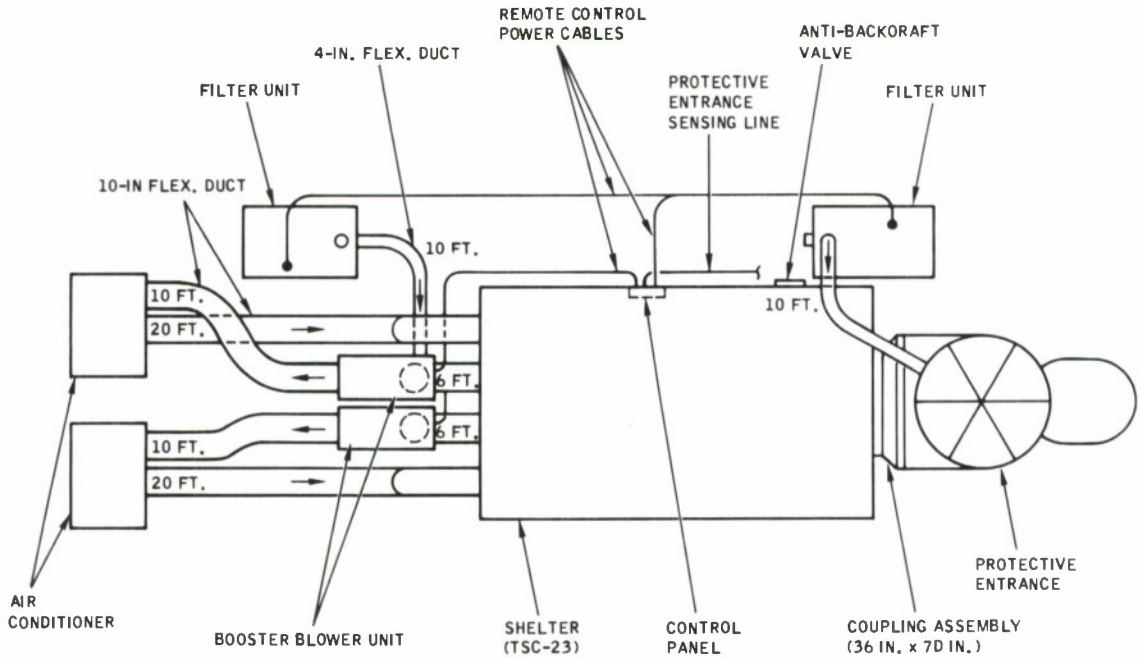

Figure 27. TSC-23 Shelter System Plan B

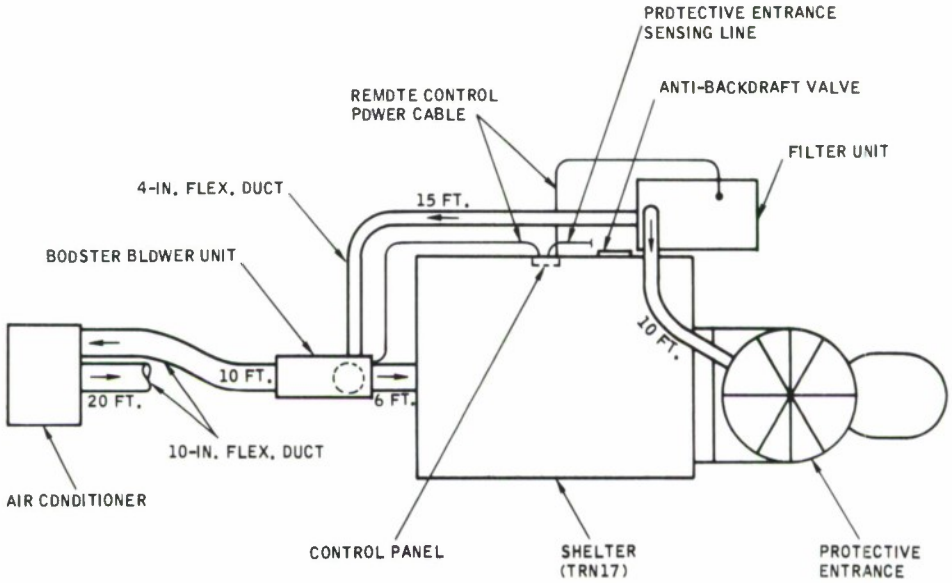

Figure 28. TRN-17 Shelter System Plan

a static pressure of 5 in. water were investigated. The static pressure requirement was increased to compensate for losses in the unit and added ducting. Figure 39 shows the airflow characteristics of the three blowers considered for the booster blower unit. The typical blower curves shown in Figure 10 are the Figure 39 curves minus losses adjusted to give design point performance. The Dynamic Air Vaneaxial Fan Curve No. Y9201-5 is selected because, as shown by Figure 10, it will cause the smallest pressure rise change between shelters. The dynamic air fan contains a 1.9-kw, 200v, 400-cycle, 3-phase fan motor.

As shown by Figure 38, the booster blower unit is a 14.6 by 23.5 by 32.9 in. aluminum box that contains the axial fan, a swing check bypass valve, a fresh air inlet and valve, two 10-in. inlet ports with covers, one 10-in. outlet port with cover, and a 4-in. CBR filter air inlet port with cover and an electrical control panel. The booster blower unit weighting an estimated 46 lb. was designed to be used as follows:

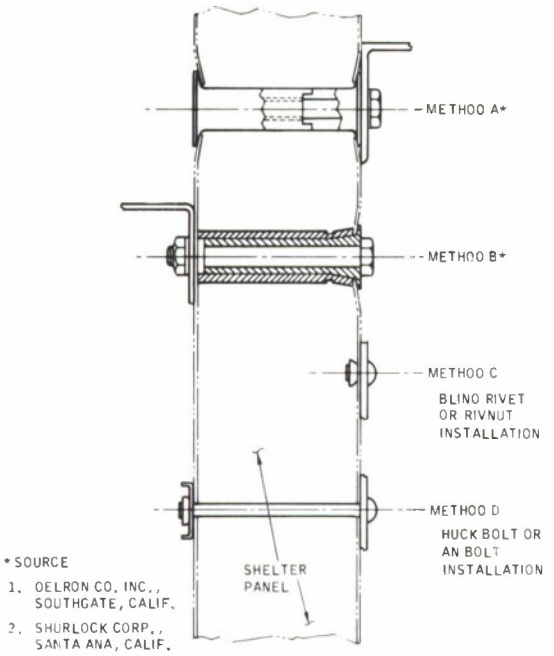

Figure 29. Commercial Panel Fasteners.

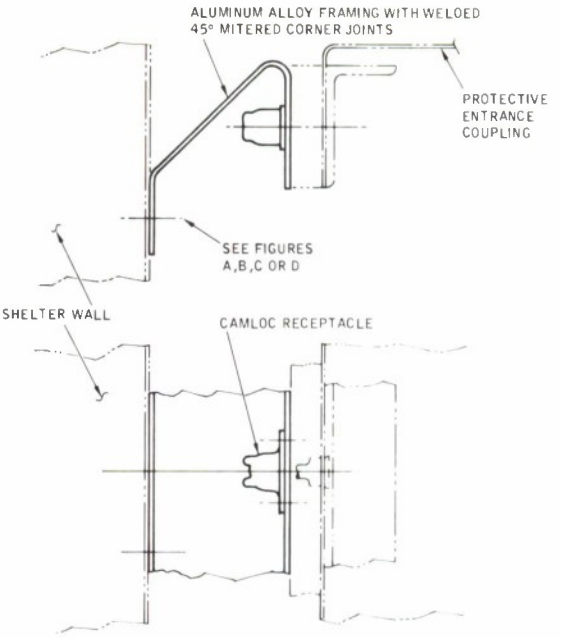

Figure 30. Protective Entrance Attachment Methods

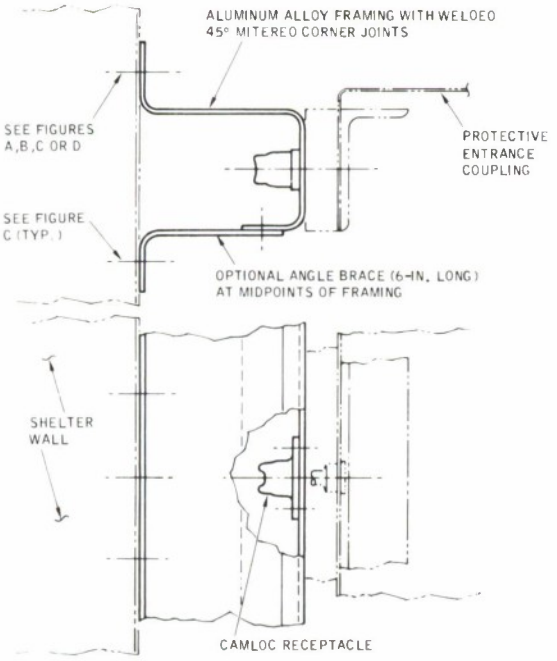

Figure 31. Protective Entrance Attachment Methods

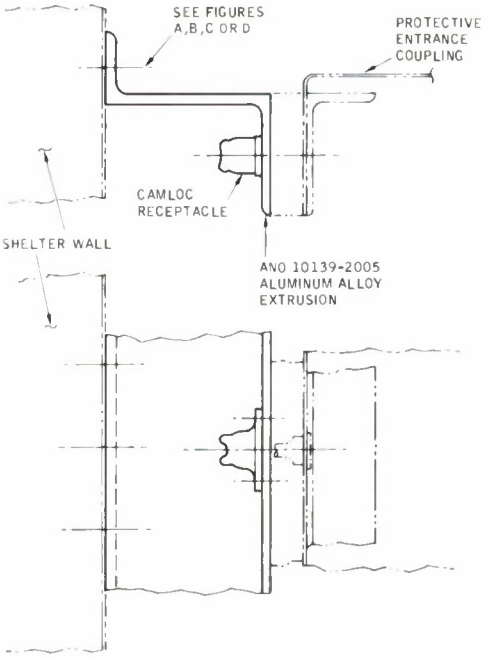

Figure 32. Protective Entrance Attachment Methods

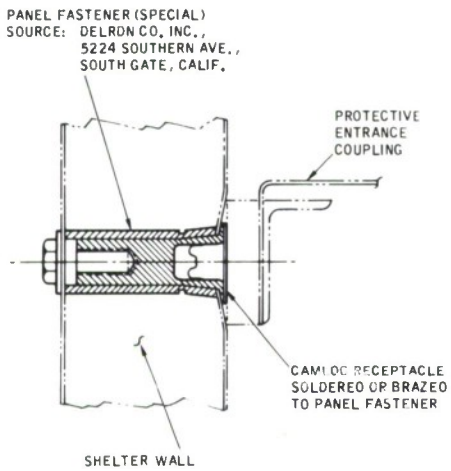

Figure 33. Shelter Wall Fastener

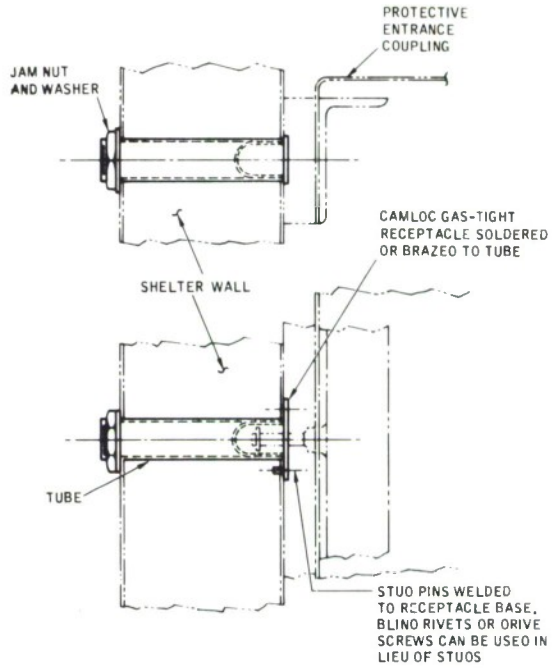

Figure 34. Shelter Wall Fastener

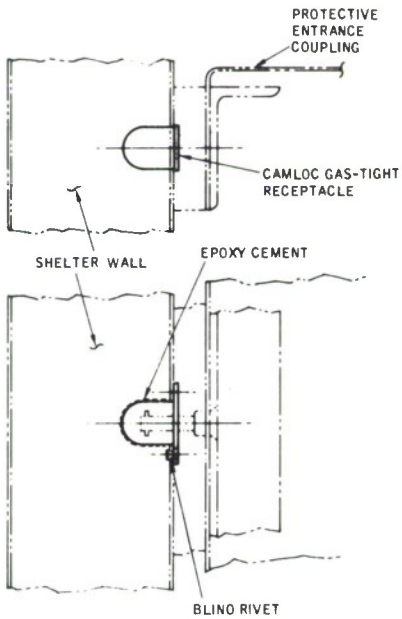

Figure 35. Shelter Wall Fastener

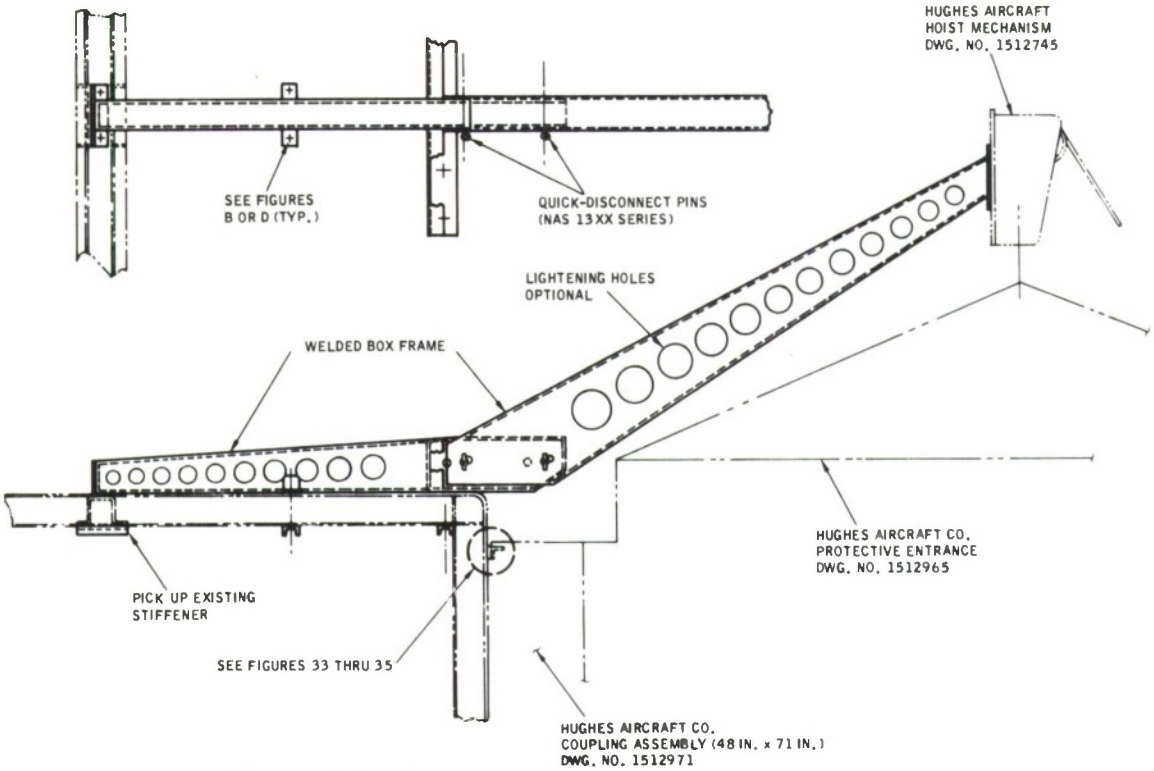

Figure 36. Protective Entrance Support Structure

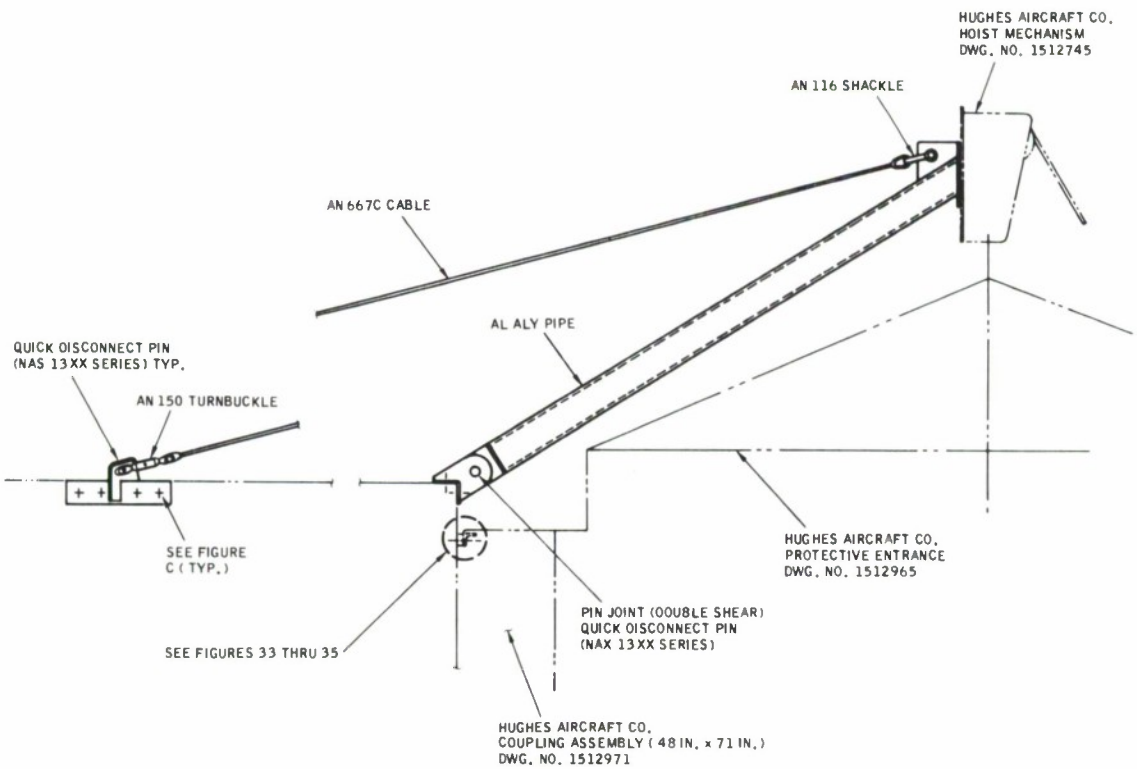

Figure 37. Protective Entrance Support Structure

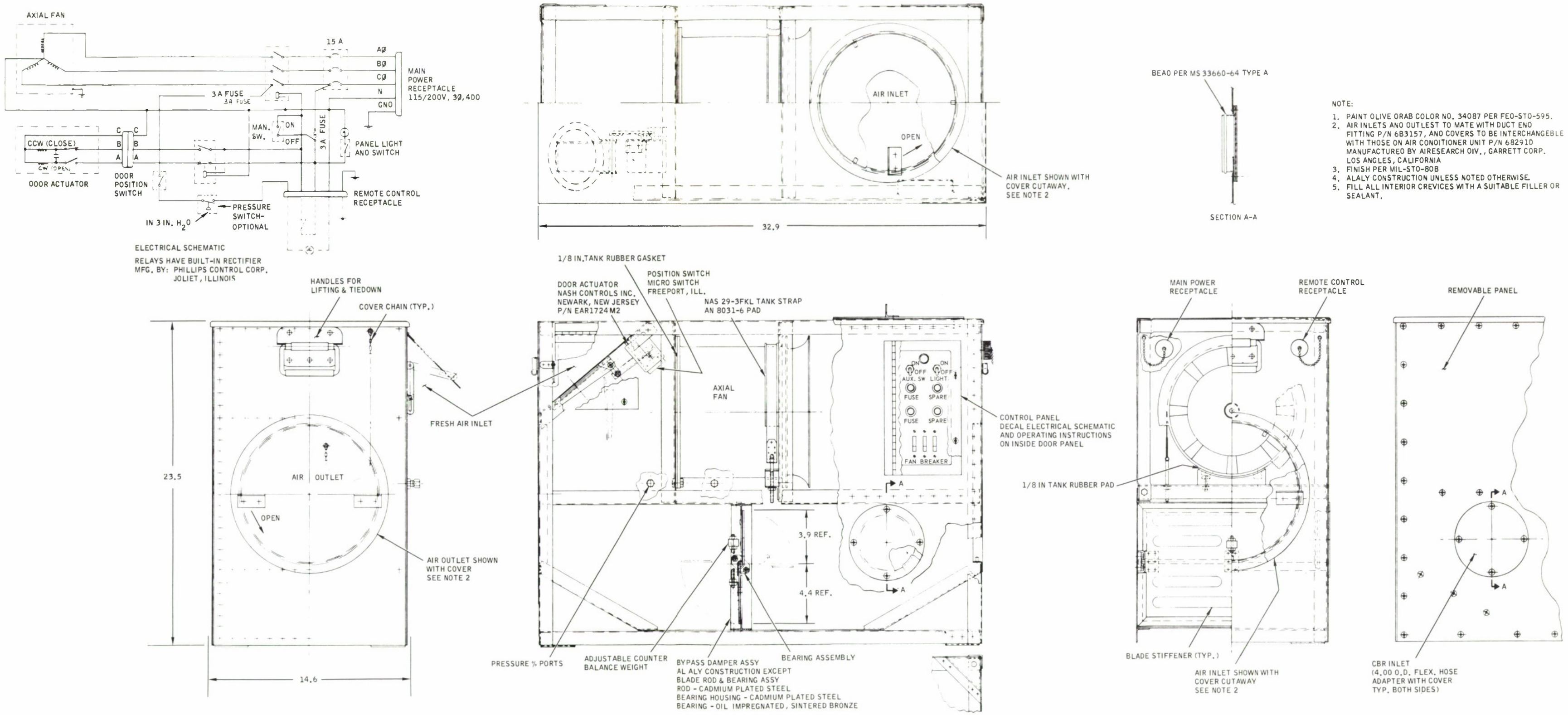

Figure 38. Booster Blower Unit.

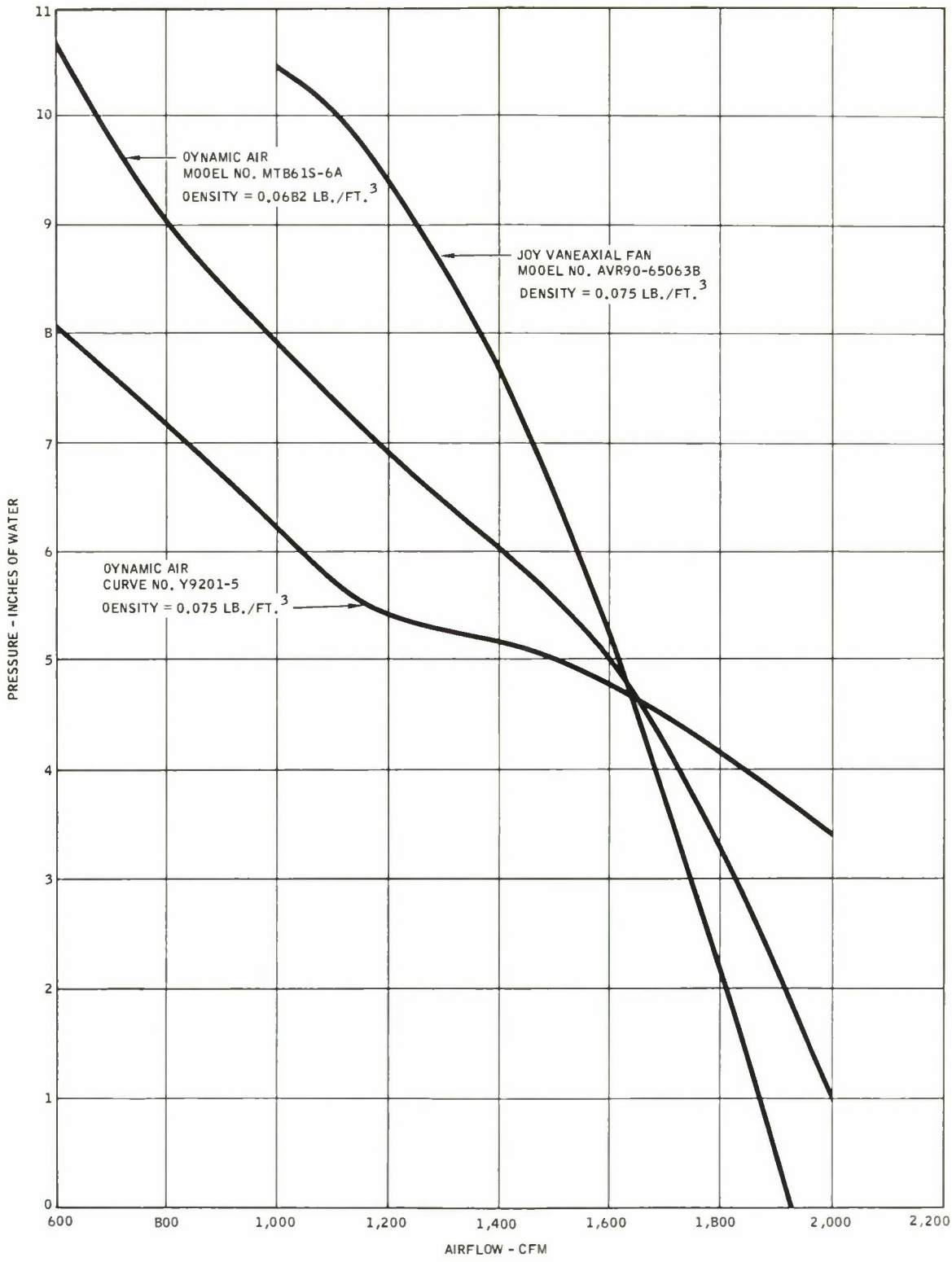

Figure 39. Blower Airflow Characteristics

a. Set booster blower unit on ground in line with shelter outlet port so that a 6-ft. section of 10-in. nominal diameter insulated flexible ducting can be connected to either the top or end inlet depending upon the location of the shelter outlet port. Connect outlet duct, CBR filter unit duct, and electrical power cables to unit.

b. When CBR protection is not required and the shelter recirculation system is on, with the booster blower off, the recirculating air will bypass the booster blower via the swing check valve and the fresh air valve can be opened as shown in Figure 40. When CBR protection is required, the booster blower is turned on along with the CBR filter unit and the fresh air valve is closed. The pressure rise across the booster blower will close the swing check valve so that all recirculating air will pass through the booster blower as shown in Figure 41. CBR filter unit air is introduced at the booster blower inlet at a 0.3 in. of water gage static pressure.

Figures 21 through 28 show the booster blower unit outline in each shelter system. These figures show that a 6-ft. section of 10-in. flexible ducting is the longest section required to connect the booster blower unit to the shelters. Although 3-ft. sections can be used for three of the six shelters, six sections are recommended for all shelters to provide common parts for the whole system. Also, as shown by these figures, one of the 20-ft. sections of 10-in. duct now required for the system can be replaced with a 10-ft. section.

Booster blower performance requirements are based on an assumed shelter recirculating air pressure-loss characteristic. Although the assumption is considered to be within 10% of actual, the booster blower unit is sized to accept a range of blowers. Test should be conducted to verify the assumption.

6.3.4 E31 Anti-Backdraft Valve — Possible locations for the E31 anti-backdraft valve shown in Figure 4 are indicated in Figures 21 through 28. The valve should be located so that it senses shelter static pressure. Figure 20 shows the performance characteristics of the valve. The valve will have to be modified so

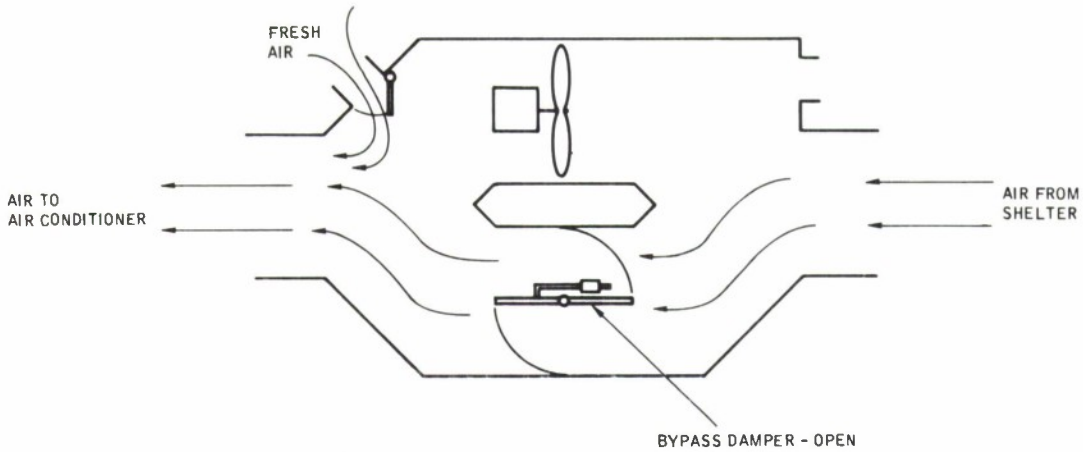

Figure 40. Booster Blower Unit — Normal Operation

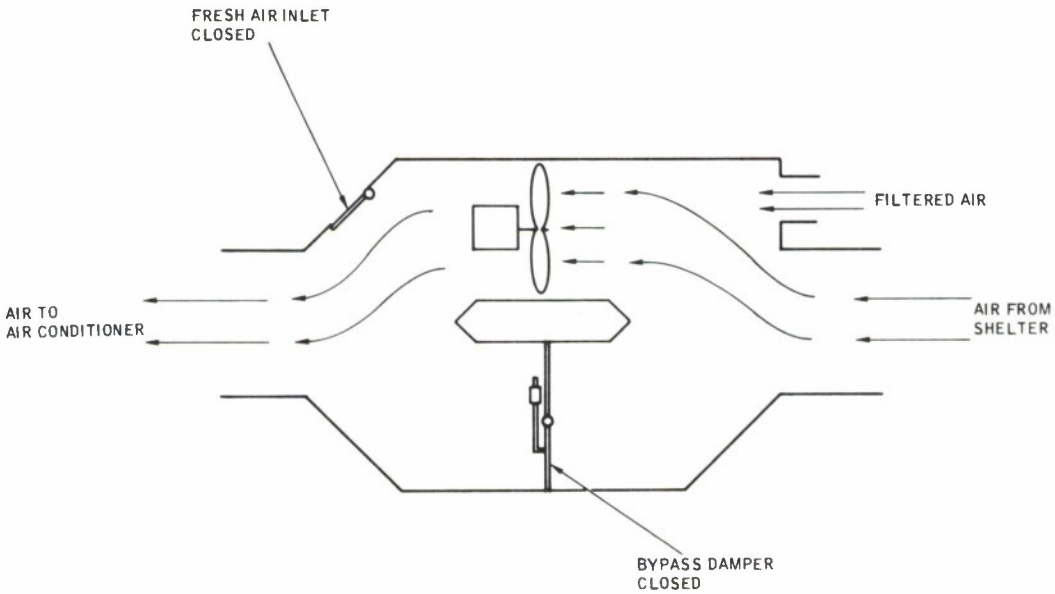

Figure 41. Booster Blower Unit — CBR Protection

that the same flows will be passed at 0.7 to 0.90 in. of water static pressure. The modifications can be made by increasing the weight of the counterweight and/or lengthening the counterweight arm. The E31 anti-backdraft valve weighs approximately 15 lb.

6.3.5 CONTROL CIRCUIT AND PANEL

6.3.5.1 Control Circuit — Figure 42 shows an electrical schematic of the CBR protection control circuit proposed for AN/TSQ-47 system shelters. Included is the electrical schematic of the E46R7 filter unit and the booster blower unit. As shown by this figure, each of the two units can be energized either at the unit or from a control panel remotely located in the shelter. The filter unit switch in the remote control panel is wired to energize the booster blower unit also so that the booster blower will be on when the filter unit is on. The separate manual switch for the booster blower unit allows use of that unit without the filter unit. Separate power connectors and cables are provided because power source

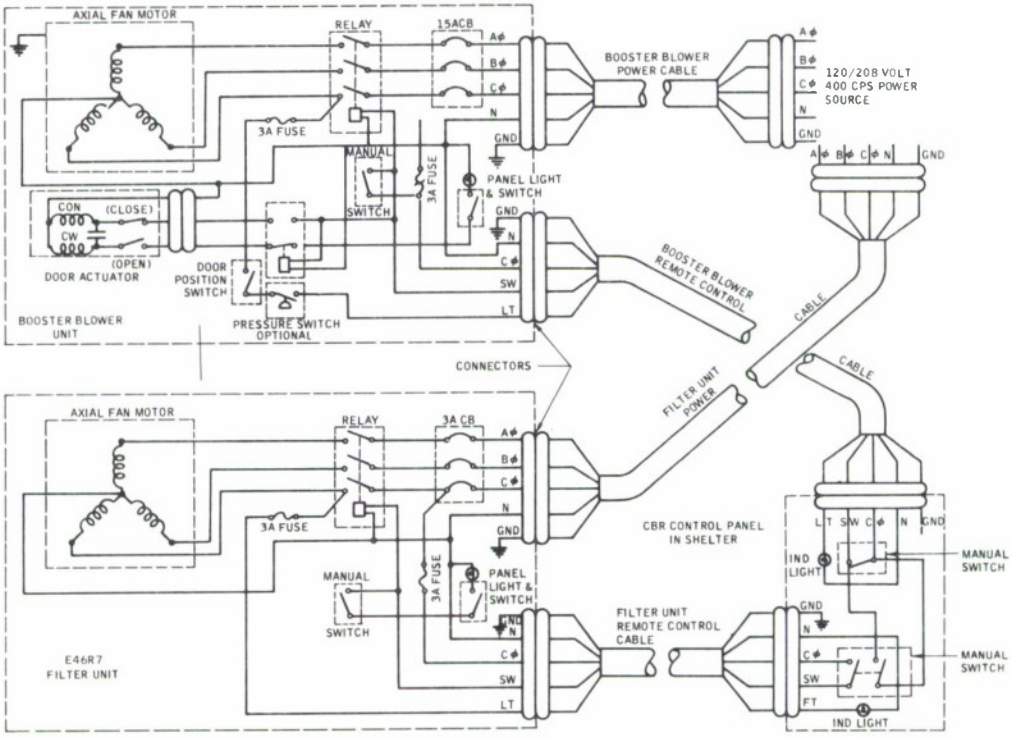

Figure 42. Electrical Schematic, CBR Protection for Typical AN/TSQ-47 Shelter System

connectors will have to be located in the shelter wall near or at the shelter power panel. The air conditioner unit contains a three-phase power connector for a CBR filter unit. It is recommended that this power connector be used for the booster blower unit power source because the booster blower unit always will be closer to the air conditioner than the filter unit.

AN/TSQ-47 shelter system and/or CBR protection component modifications required to incorporate the control circuit shown in Figure 42 are listed as follows:

a. Modify electrical circuit in E46R7 filter unit to circuit shown in Figure 42.

b. Install a 15-amp, 3-phase circuit breaker for the CBR unit in the air conditioner.

c. Install a 5-terminal power connector for the E46R7 filter unit in the wall of each shelter at or near the shelter power panel and connect the power to it.

d. Install two 5-terminal remote control connectors and the remote control unit in and on the wall of each shelter at a location convenient to personnel in the shelter.

6.3.5.2 Control Panel — A control panel is required in each shelter to control and monitor the operation of CBR protection components. The control panel design shown in Figure 43 contains the following components:

a. A 0-2 in. of water shelter pressure gage.
b. A 0-2 in. of water protective entrance pressure gage.
c. An "off" "on" switch and indicator light for the CBR filter unit.

Included in Figure 43 is the connector panel for the control cable receptacles and static pressure sensing line connectors. The connector panel contains two control cable receptacles — one for the booster blower unit and one for the CBR filter unit. It also contains two static pressure connectors — one to sense pro-

tective entrance pressure and one to sense outside ambient pressure. The control panel should be located as close as possible to the air conditioner control panel in each shelter. The control and connector panel will weigh approximately 3 lb.

6.4 SHELTER MODIFICATIONS

Some shelter modifications have been discussed in connection with the selected CBR components. Others have been suggested or indicated. All the modifications that must be made in each shelter to incorporate CBR protection are tabulated and summarized in this paragraph. Modifications are listed as follows:

a. Design and install protective entrance coupling fasteners and adapters.

b. Design and install attachment for protective entrance support beam.

c. Provide port in shelter wall for anti-backdraft valve.

d. Install control panel in shelter and connector panel in shelter wall.

e. Remove flapper valve and/or louvers from shelter doors and seal openings.

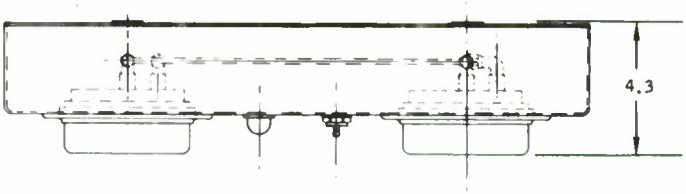

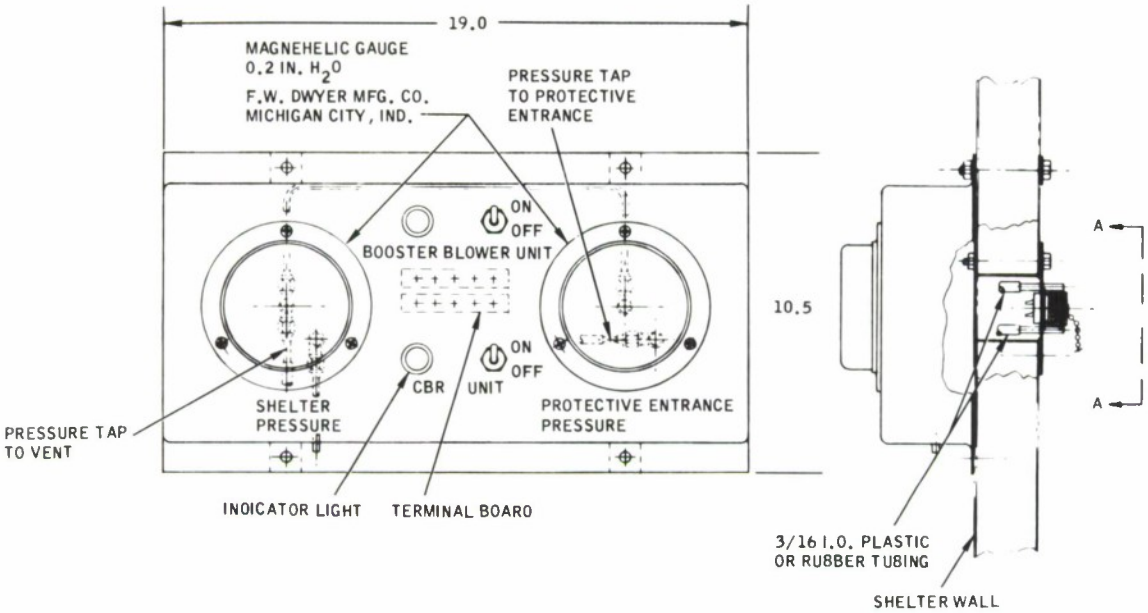

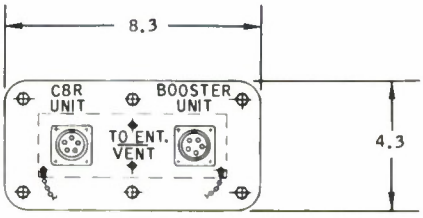

SECTION A - A

RECEPTACLE PROTECTION CAPS
NOT SHOWN FOR CLARITY

NOTE:

1. AL ALY CONSTRUCTION
2. FINISH PER MIL-STD-808
3. PAINT OLIVE DRAB COLOR 34081 PER FED-STD-595

Figure 43. CBR Control Panel

SECTION 7 | CONCLUSIONS

CBR protection components have been selected for the various AN/TSQ-47 system shelters based on the requirement for Category A protection, and a shelter system analysis to determine component performance requirements. Category A protection requires for each shelter system a CBR filter unit, shelter system pressurization, a protective entrance, an anti-backdraft valve, and remote controls. Standard Chemical Corps components with capacities in the required range were found to be available. The shelter system analysis, which is based on assumed air conditioner and shelter leakage characteristics and shelter recirculating air pressure loss characteristics, show that when the shelter system is pressurized, a booster blower is required in the shelter recirculation system to reduce shelter static pressure to an acceptable value for ease of entrance.

Standard CBR protection components selected for the AN/TSQ-47 system shelters are:

a. E46R7 filter unit.

b. Q38 protective entrance (short).

c. E31 anti-backdraft valve.

Each of these components will require some modifications, as described in Paragraph 6.3, to meet performance requirements. Procurement descriptions and drawings for these units can be obtained from the Chemical Corps. The booster blower unit and control panel, also described in Paragraph 6.3, are required to incorporate the selected components. Detailed modification designs could not be made because final shelter drawings were not available. Size,

weight, and power requirements of the selected components are shown in Table VIII. Performance requirements of the booster blower and E46R7 unit are based on assumptions that are considered to be within 10% of actual values. Tests described in Paragraph 6.2 should be conducted to verify the assumptions.

Table VIII. Selected CBR Protection Components for AN/TSQ-47 System Shelters

Component	Dimensions (in.)	Weight (lb.)	Power Required (kw)
E46R7 Filter Unit (Modified	40 x 24 x 16	160	0.746
Q38 Protective Entrance (short)	(10 cu. ft. folded up)	79	-
Booster Blower Unit	14.6 x 23.5 x 32.9	46	1.9
E31 Anti-Backdraft Valve	9.3 x 8.5 x 3.4	15	-
Control & Connector Panel	19 x 10.5 x 4.3	3	

MISCELLANEOUS

One 15-ft. section of 4-in flexible ducting per filter unit.

One 10-ft. section of 4-in. flexible ducting per filter unit.

One 20-ft. section of power cable per filter unit.

One 6-ft. section of 10-in. flexible ducting per booster blower unit.

One 10-ft. section of 10-in. flexible ducting per booster blower unit.

One 20-ft. section of power cable per booster blower unit.

One 20-ft. section of remote control cable per booster blower unit.

SECTION 8 | RECOMMENDATIONS

It is recommended that the results of this investigation be used to define the contract for the final design, testing and procurement of CBR protection components for AN/TSQ-47 system shelters. Detail recommendations for final CBR protection system design are:

a. Test each shelter as described in Paragraph 6.2.1.

b. Using test results, analyze each shelter system as required to define CBR filter unit and booster blower unit size.

c. Procure final CBR protection component and shelter drawings and define required modifications in detail.

d. Purchase prototype components and conduct performance tests of complete shelter systems.

APPENDIX | SHELTER SYSTEM ANALYSIS

SECTION 1 | INTRODUCTION

Each of the six shelter systems that make up the AN/TSQ-47 system has been analyzed to determine shelter temperatures and pressures with makeup air from a CBR filter unit and with and without a booster blower added to reduce shelter pressure. This appendix contains the details of these analyses.

SECTION 2 | TERMINOLOGY

2.1 SYMBOLS

A	=	Area (sq. ft.)
B	=	Blower power (kw)
c_p	=	Specific heat of air = 0.24 BTU/lb. (° F)
f	=	Function
h	=	Heat transfer coefficient (BTU/hr., sq. ft., ° F)
hp	=	Horsepower
k	=	Thermal conductivity (BTU/hr., sq. ft., ° F/ft.)
P	=	Pressure (in. Hg. A)
p	=	Pressure, in. H_2O gage = $(P - P_a)$ (13.59)
ΔP	=	Pressure differential (in. H_2O)
Q	=	Heat flow (BTU/hr.)
T	=	Temperature (° F and/or ° R)
ΔT	=	Temperature differential (° F or ° R)
U	=	Over-all heat transfer coefficient (BTU/hr., sq. ft., ° F)
W	=	Airflow (lb./hr.)
w	=	Airflow (lb./min.)
x	=	Insulation thickness (in.)

2.2 SUBSCRIPTS

Subscripts are identified from Figures 1 and 8 as follows:

A	=	Ambient
AC	=	Air conditioner
B	=	Blower
BF	=	Booster fan
C	=	Heat transmitted through shelter walls
CBR	=	CBR filter unit
D1	=	Inlet duct
D2	=	Outlet duct
D3	=	Duct supplying CBR filter unit air to air conditioner
D4	=	Duct supplying CBR filter unit air to protective entrance
M	=	Mean or average
SH	=	Shelter
T	=	Total
1	=	Recirculating air out of air conditioner
2	=	Recirculating air into shelter
3	=	Recirculating air out of shelter
4	=	Recirculating air into air conditioner
5	=	Fresh or filter unit air into air conditioner
6	=	Air conditions entering air conditioner filter
7	=	Air condions at entrance to recirculating fan
8	=	Air conditions in outlet plenum of filter unit
9	=	Air conditions at filter air duct inlet
10	=	Air conditions at entrance duct inlet
11	=	Air conditions at inlet to electrical equipment in shelter
12	=	Air conditions at shelter recirculating air outlet
13	=	Air conditions at inlet to protective entrance

SECTION 3 | ASSUMPTIONS

a. Shelter leakage is assumed equal to 25 cfm when the static pressure inside the shelter is equal to 1 in. H_2O gage.

b. Air-conditioner leakage is assumed equal to 40 cfm when the static pressure at the inlet to the recirculating fan is equal to 0.3 in. H_2O gage.

c. The recirculating airflow path through the shelter is assumed to be from inlet to shelter space to electronic equipment to outlet.

d. The pressure drop from the shelter recirculating air inlet to outlet is assumed equal to 1 in. of water with a recirculating airflow of 110 lb./min. for the one-air-conditioner shelters and equal to 1 in. of water with a recirculating airflow at 220 lb./min. for the two-air-conditioner shelters.

e. The shelter temperature is assumed to be equal to the average of the recirculating air temperature at the inlet to the shelter and the inlet to the electrical equipment.

SECTION 4 | PRELIMINARY CALCULATIONS

4.1 SHELTER WALL HEAT TRANSMISSION

The 1963 ASHRAE Guide and Data Book (Reference 7) was used to determine an average shelter wall heat transmission coefficient at 125° F day conditions, as follows:

4.1.1 ASSUMED CONDITIONS — Conditions are assumed similar to analysis supplied by ESD to utilize the methods and tables in Chapter 26 of Reference 7. Typical ambient and shelter conditions are assumed as follows:

Time:	2:00 PM, 1 August.
Location:	40° N Latitude.
Wind:	7 1/2 mph, southwest.
Outside temperature:	T_A = 125° F.
Shelter temperature:	T_{sh} = 85° F.

Shelter orientation.

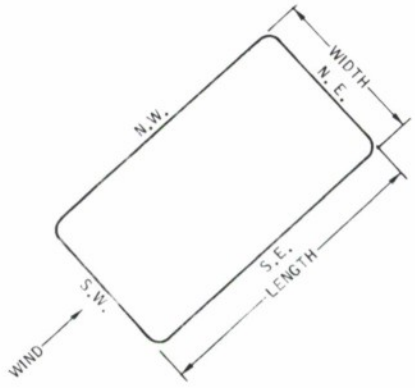

4.1.2 EQUIVALENT TEMPERATURE DIFFERENTIALS — Equivalent temperature differentials are tabulated in Reference 7 for various roof and wall constructions. Equivalent temperature differentials are selected for the typical AN/TSQ-47 shelters based on the assumed conditions as follows:

Top — From Table 8, for light construction roof exposed to sun at 2 PM.

Bottom — Since in Shade, use $\Delta T_T = 62° F$

$\Delta T_B = 0 °F.$

Walls — From Table 9, for dark walls at 2:00 PM:

— N.W. Wall $\Delta T_{N.W.} = 12° F$

— S.E. Wall $\Delta T_{S.E.} = 24° F$

— N.E. Wall $\Delta T_{N.E.} = 12° F$

— S.W. Wall $\Delta T_{S.W.} = 26° F$

Since the above equivalent temperature differentials are for an outdoor maximum minus room temperature differential of 15°, they must be corrected for assumed shelter outdoor maximum minus shelter temperature differential as follows:

$$\Delta T_C = \Delta T_{SA} - 15 = (T_A - T_{SH}) - 15$$

$$= (125 - 85) - 15 = 25$$

The correct equivalent temperature differentials are:

Top $-T_T = 62 + 25 = 87° F$

Top in shade $-T_{ST} = 12 + 25 = 37° F$

Bottom $-T_B = 0 + 25 = 25° F$

N.W. Wall $-T_{N.W.} = 12 + 25 = 37° F$

S.E. Wall $-T_{S.E.} = 24 + 25 = 49° F$

N.E. Wall $-T_{N.E.} = 12 + 25 = 37° F$

S.W. Wall $-T_{S.W.} = 26 + 25 = 51° F$

It should be noted that these equivalent temperature differentials include the effect of solar radiation.

4.1.3 SHELTER INSIDE SURFACE AREAS

4.1.3.1 AN/TPS-35, AN/TPN-14, AN/TSC-23 Shelters — The inside dimensions of the AN/TPS-34, AN/TPN-14, and the AN/TSC-23 shelter are:

Length	— 11.2 ft.
Width	— 6.32 ft.
Height	— 6.12 ft.

Inside surface areas then are:

Top	A_T	$= (11.2)(6.32) = 70.78$ ft.^{2}
Bottom	A_B	$= (11.2)(6.32) = 70.78$ ft.^{2}
N.W. Wall	$A_{N.W.}$	$= (11.2)(6.12) = 68.54$ ft.^{2}
S.E. Wall	$A_{S.E.}$	$= (11.2)(6.12) = 68.54$ ft.^{2}
N.E. Wall	$A_{N.E.}$	$= (6.12)(6.32) = 38.68$ ft.^{2}
S.W. Wall	$A_{S.W.}$	$= (6.12)(6.32) = 38.68$ ft.^{2}
Total	A_{TOT}	356.00 ft.^{2}

4.1.3.2 AN/TRN-17 Shelter — The inside dimensions of the AN/TRN-17 shelter are:

Length	8 ft.
Width	6.33 ft.
Height	6.33 ft.

Inside the surface areas then are:

Top	-	A_T	=	(8)(6.33)	= 50.64 ft.^{2}
Bottom	-	A_B	=	(8)(6.33)	= 50.64 ft.^{2}

N.W. Wall	-	$A_{N.W.}$	=	(8)(6.33)	= 50.64 ft.^{2}
S.E. Wall	-	$A_{S.E.}$	=	(8)(6.33)	= 50.64 ft.^{2}
N.E. Wall	-	$A_{N.E.}$	=	(6.33)(6.33)	= 40.07 ft.^{2}
S.W. Wall	-	$A_{S.W.}$	=	(6.33)(6.33)	= 40.07 ft.^{2}
Total	-	A_{TOT}	=		282.70 ft.^{2}

4.1.3.3 AN/TSW-5 Inside Dimensions

Main Shelter - L - 175", W - 89.50", H - 76.25"

Each Extension - L - 123", W - 37.25", H - 66.75"

Inside Surface Areas

Top - A_T	= (14.58)(7.46 + (10.25)(3.10)(2)	= 172.32 ft.^{2}
Bottom A_B	= (14.58)(7.46 + (10.25)(3.10)(2)	= 172.32 ft.^{2}
N.W. Wall	= (14.58)(6.35) - .208 (5.56)(2) + 10.557	= 88.04 ft.^{2}
S.E. Wall	= (14.58)(6.35) - .208 (5.56)(2) + 10.557	= 88.04 ft.^{2}
N.E. Wall	= (7.46)(6.35) + 2(3.10)(5.56)	= 81.84 ft.^{2}
S.W. Wall	= (7.46)(6.35) + 2(3.10)(5.56)	= 81.84 ft.^{2}
Total Area		684.40 ft.^{2}

4.1.3.4 AN/TSW-6 Inside Surface Areas (From RCA Drawing 49671E 1734208, Sheets 4 and 7).

Top - L = 11.17 ft. W = 6.3 ft.	A_T = (11.17)(6.3)	=	70.37 ft.^{2}
Shelf Top =	A_{ST} = (8125)(2)(11.17 + 4.72)	=	25.82 ft.^{2}
Bottom	A_B = (11.17)(6.3)	=	70.37 ft.^{2}
N.W. Wall Solid	A_{NWS} = (11.17(3.3)	=	36.86 ft.^{2}
Glass	A_{GNW} = (2.83)(10.53)	=	29.80 ft.^{2}

S.E. Wall Solid	A_{SSE}	$= (11.17)(3.3)$	$= 36.86$ ft.^{2}
Glass	A_{GSE}	$= (2.83)(10.53)$	$= 29.80$ ft.^{2}
N.E. Wall Solid	A_{SNE}	$= (6.3)(3.3)$	$= 20.79$ ft.^{2}
Glass	A_{GNE}	$= (2.83)(5.69)$	$= 16.10$ ft.^{2}
S.W. Wall Solid	A_{SSW}	$= (6.3)(3.3)$	$= 20.79$ ft.^{2}
Glass	A_{GSW}	$= (2.83)(5.69)$	$= 16.10$ ft.^{2}
Total Solid Area			$= 281.86$ ft.^{2}
Total Glass Area			$= 91.80$ ft.^{2}
Total Area			$= 373.66$ ft.^{2}

4.1.4 HEAT TRANSMISSION COEFFICIENTS — Shelter structure heat transmission coefficient is

$$U = \frac{1}{\frac{1}{h_o} + \frac{1}{h_i} + \frac{x}{k}} .$$

For the typical Craig Shelter:

$$k/x = 0.35 \quad \text{(From Mr. Watt).}$$

From Reference 1:

$$h_o = 4.0.$$

From K. Kummerlow (AiResearch) calculations:

$$h_i = 2.0.$$

Then

$$U = \frac{1}{\frac{1}{4} + \frac{1}{2} + \frac{1}{0.35}} = 0.28 \text{ BTU/hr. ft.}^2 \,^\circ\text{F}$$

An average heat trnasmission coefficient is required to determine shelter temperatures with the added CBR components, and is calculated for each shelter.

4.1.4.1 AN/TPS-35, TPN-14, and TSC-23 Shelters — Shelter heat gain through walls at assumed condition is:

$$Q_C = \Sigma\,(UA\Delta T_E \text{ for each wall})$$

$$= U_M A_T \Delta T_C$$

Then for AN/TPS-35, TPN-14, and TSC-23 Shelters

Top	$- UA_T \Delta T_T$	$= (0.28)(70.78)(87)$	$= 1,724.20$ BTU/hr.
Bottom	$- UA_B \Delta T_B$	$= (0.28)(70.78)(25)$	$= 495.46$ BTU/hr.
N.W. Wall	$- UA_{NW} \Delta T_{NW}$	$= (68.54)(37)$	$= 710.07$ BTU/hr.
S.E. Wall	$- UA_{SE} \Delta T_{SE}$	$= (68.54)(49)$	$= 940.37$ BTU/hr.
N.E. Wall	$- UA_{NE} \Delta T_{NE}$	$= (38.68)(37)$	$= 400.72$ BTU/hr.
S.W. Wall	$-UA_{SW} \Delta T_{SW}$	$= (38.68)(51)$	$= 552.34$ BTU/hr.
	TOTAL OR Q_C	$=$	$= 4,823.17$ BTU/hr.

$$U_M = Q_C / A_T \Delta T_C$$

$$= 4,823.17/(356)(125-85) = 4,823.17/14,240$$

$$= 0.339 \text{ BTU/hr., ft.}^2\text{, °F}$$

$$U_M A = (0.339)(356) = 120.7 \text{ BTU/hr., °F}$$

4.1.4.2 AW/TSW-5 and AN/TRN-17 Shelter — Assume $U_M = 0.339$ BTU/hr. ft.^{2}, °F since shelter construction is similar then for

$$\text{AN/TSW-5 } U_M A = (0.339)(684.4) = 232 \text{ BTU/hr., °F}$$

$$\text{AN/TRN-17 } U_M A = (0.339)(282.7) = 95.83 \text{ BTU/hr., °F}$$

4.1.4.3 AN/TSW-6 Shelter — This shelter contains window surface which must be considered in determining a mean wall heat transfer coefficient. From Chapter 26, Reference 7, the total heat transfer through window glass is defined as:

$$q/A = S(F_D I_D + F_d I_d) + U(t_o - t_i)$$

where

q/A = Instantaneous rate of heat transfer, BTU/(hr.)(ft.)^2.

S = Shading coefficient for fenestration being considered.

F_D, F_d = Ratio of solar heat gain to the incident direct and diffuse solar radiation, respectively, dimensionless.

I_D, I_d = Incident direct and diffuse solar energy respectively, BTU/(hr.)(ft.)^2.

U = Over-all coefficient of heat transmission, BTU/(hr.)(ft.)^2(°F).

t_o, t_i = Outdoor and indoor air temperature, respectively, °F.

Solar heat gain factors that represent the $(F_D I_D)$ term in the preceeding equation are tabulated in Reference 7 for single unshaded double-strength (1/8 in.) sheet glass. Shading coefficients also are tabulated and included correction for glass thickness and type. From Table 18, Chapter 26, Reference 7, the heat transmission coefficient for any single glass with 7 1/2 mph wind is: U = 1.06 no shading.

Solar heat gain factors are interpolated from Tables 12 and 13, Chapter 26, Reference 7, for the assumed conditions as follows:

	Table 12 July 21	Table 13 August 21	August 1 1
N.W. Wall	36	23	31
S.E. Wall	205	195	20
N.E. Wall	205	195	20
S.W. Wall	140	172	151

The shading factor for 1/2 in. plate glass in sun and in shade is

S = 0.88 from Table 19, Chapter 26, Reference 7.

Then q/A values are: using.

$$q/A = S \text{ (Solar Heat Gain Factor)} + U\,(t_o - t_i).$$

N.W. Wall $(q/A)_{NW}$	$= 0.88(31) + 1.06\,(40)$	$= 69.68$ BTU/(hr.)(ft.)^2
S.E. Wall $(q/A)_{SE}$	$= 0.88(20) + 1.06\,(40)$	$= 60.00$ BTU/(hr.)(ft.)^2
N.E. Wall $(a/A)_{NE}$	$= 0.88(20) + 1.06\,(40)$	$= 60.00$ BTU/(hr.)(ft.)^2
S.W. Wall $(q/A)_{SW}$	$= 0.88(172) + 1.06\,(40)$	$= 193.76$ BTU/(hr.)(ft.)^2

For AN/TSW-6 Shelter the total shelter wall heat transmission is

Top	$UA_T \Delta T_T$	$= (0.28)(70.37)(87)$	$= 1,714.21$ BTU/hr.
Shelf	$UA_{S'} \Delta T_S$	$= (0.28)(25.82)(37)$	$= 267.50$ BTU/hr.
Bottom	$UA_B \Delta T_B$	$= (0.28)(70.37)(25)$	$= 492.59$ BTU/hr.
N.W. Wall Solid	$UA_{SNW} \Delta T_{NW}$	$= (0.28)(36.86)(37)$	$= 381.87$ BTU/hr.
N.W. Wall Glass	$A_{GNW}(q/A)_{NW}$	$= (29.80(96.68)$	$= 2,076.46$ BTU/hr.
S.E. Wall Solid	$UA_{SSE} \Delta T_{SE}$	$= (0.28)(36.86)(49)$	$= 505.72$ BTU/hr.
S.E. Wall Glass	$A_{GSE}(q/A)_{SE}$	$= (29.80)(60)$	$= 1,788.00$ BTU/hr.
N.E. Wall Solid	$UA_{SNE} \Delta T_{NE}$	$= (0.28)(20.79)(37)$	$= 215.38$ BTU/hr.
N.E. Wall Glass	$A_{GNE}(a/A)_{NE}$	$= (16.10)(60)$	$= 966.00$ BTU/hr.

S.W. Wall Solid	$UA_{SSW}\Delta T_{SW}$	= (.28)(20.79)(51)	=	296.88 BTU/hr.
S.W. Wall Glass	$A_{GSW}(q/A)_{SW}$	= 193.76(16.10)	=	3,119.54 BTU/hr.

Q_C =11,824.15 BTU/hr.

$U_M = Q_C/A_T\Delta T_C$

$= 11,824.15/373.66(40) = 0.791$ BTU(hr.)(ft.)^2 (° F)

$U_M A_T = 296$

4.2 DUCT WALL HEAT TRANSMISSION

From AiResearch notes supplied by ESD, heat transmission through the walls of the flexible ducting (10 in. diameter, 20 ft. long, with 1/2-in. fiberglass insulation) is calculated as follows:

$$U = \frac{1}{\frac{1}{h_o} + \frac{1}{h_i} + \frac{x}{k}}$$

$\frac{k}{x} = (0.20)(12)/0.5 = 0.72$ BTU/hr., ft.^{2} ° F

$h_o = 4$ BTU/hr., ft.^{2} ° F. from design condition

$h_i = 7.2$ BTU/hr., ft.^{2} ° F (determined by Nusselt correlation)

then

$$U = \frac{1}{\frac{1}{4} + \frac{1}{7.2} + \frac{1}{0.72}}$$

$= 0.563$ BTU/hr., ft.^{2}, ° F

Duct wall area $A_D = 20(10T_T)/12 = 52 \text{ ft.}^2$

$$UA = (52)(.563) = 29.25 \text{ BTU/hr., } ^\circ F$$

4.3 HEAT LOADS

4.3.1 PERSONNEL HEAT LOAD — From AiResearch notes supplied by ESD, the heat load per person is:

$$Q_{Latent} = 450 \text{ BTU/hr.}$$

$$Q_{Sensible} = \underline{150 \text{ BTU/hr.}}$$

$$Q_{Total} = 600 \text{ BTU/hr.}$$

4.3.2 ELECTRICAL LOADS — From notes supplied by ESD, the electrical heat load in each shelter is tabulated in Table V.

4.4 PRESSURE LOSS CHARACTERISTICS

4.4.1 FLEXIBLE AIR DUCTING — Pressure loss characteristics of the 20-ft. sections of 10-in. diameter insulated flexible air ducting are calculated in Table VI based on the assumption that the latest ducting has 70% of the loss shown in Figure AAC-4364-C1 in Reference 5. This assumption was obtained from Mr. K. Kummerlow of AiResearch, Phoenix, Arizona. The resulting loss characteristics are shown in Figure 7. Table VI includes combined characteristics of ducting and shelter.

4.4.2 SHELTER LOSS CHARACTERISTIC — From Assumption d, the coefficient for the pressure drop from the shelter recirculating air inlet to outlet is calculated as follows:

Using the basic equation

$$\sigma \triangle P = KW^2$$

Where $\sigma = 17.32\ P_{in}/T_{in}$

P_{in} = Inlet pressure, in. Hg. A

T_{in} = Inlet temperature, °R (°F + 460)

$\triangle P$ = Pressure drop, in. H_2O

K = Loss coefficient, in. H_2O/ (lb./min.)^2

W = Airflow, lb./min.

Then from Assumption d

$$K_{Sh} = \sigma_1 \triangle P_{SH}/W_1^2$$

$$\sigma_1 \triangle P_{Sh} = 1.00 \text{ in. } H_2O$$

$$W_1 = 110 \text{ lb./min.}$$

$$K_{Sh} = 1.00/(110)^2 = 0.0000826 \text{ in. } H_2O/(\text{lb./min.})^2$$

For the shelters with one air conditioner

$$K_{Sh} = 1.00(220)^2 = 0.0000207 \text{ in. } H_2O(\text{lb./min.})^2$$

for the shelters with two air conditioners.

4.4.3 SHELTER LEAKAGE — Shelter leakage loss coefficient can be calculated from Assumption a as follows:

$$K_{SL} = \sigma_{Sh} \triangle P_{SL}/W_{SL}^2$$

where

$$\sigma_{Sh} = 17.32\ P_{Sh}/T_{Sh}$$

$$\Delta P_{SL} = (P_{Sh} - P_A)\ 13.59,\ \text{in. } H_2O$$

$$W_{SL} = \rho_{Sh}\ CFM_{SL},\ \text{lb./min.}$$

then from Assumption a.

$$\sigma_{Sh}\ \Delta P_{SL} = 1.00 \text{ in. } H_2O$$

$$\rho_{Sh} = 0.0765 \text{ lb./ft.}^3,\ \text{standard density}$$

$$W_{SL} = 0.0765\,(25) = 1.91 \text{ lb./min.}$$

$$K_{SL} = 1.00/(1.91)^2 = 0.2734 \text{ in. } H_2O/\ (\text{lb./min.})^2.$$

4.4.4 AIR CONDITIONER LEAKAGE — The air conditioner leakage loss coefficient can be calculated from Assumption b as follows:

$$K_{ACL} = \sigma_7 P_{ACL}/ACL^2$$

$$ACL = \rho_7\ CFM$$

$$= 0.9765\ (40) = 3.06 \text{ lb./min.}$$

$$\sigma_7 P_{ACL} = 0.3 \text{ in. } H_2O$$

$$K_{ACL} = 0.3/(3.06)^2 = 0.03204 \text{ in. } H_2O/(\text{lb./min.})^2.$$

4.4.5 AIR CONDITIONER EVAPORATOR LOSS — From Reference 5, the basic rating of the recirculating fan in the air conditioner is 1,350 cfm at 2.45 in. H_2O pressure rise with an inlet density of 0.0765 lb./ft.^{3}. From this basic rating the mass flow is

$$W_{AC} = (1350)(.0765) = 103.275 \text{ lb./min.}$$

Also from Reference 5 the pressure rise available external to the air conditioner at the above flow is

$$\Delta P_{AC} = 0.9 \text{ in. } H_2O.$$

The air conditioner internal pressure loss due to the filter, evaporator, heater coils, and inlet plenum then is

$$\Delta P_{ev} = 2.45 - P_{AC}$$

$$= 2.45 - 0.90 = 1.55 \text{ in. } H_2O$$

The loss coefficient based on the fan inlet pressure then is

$$K_{ev} = \sigma_7 \Delta P_{ev}/W_{AC}^2$$

$$\sigma_7 = 1.00 \text{ from recirculating fan rating}$$

$$K_{ev} = (1)(1.55)/(103.275)^2$$

$$= 0.0001453 \text{ in. } H_2O/(\text{lb./min.})^2.$$

4.5 AIR CONDITIONER PERFORMANCE

Pressure rise characteristics of the air conditioner ($\sigma_1 \Delta P_{AC}$ vs. W_{AC}) are calculated in Table IV based on outlet conditions, and the Reference 5 external pressure rise (ΔP_{AC}) variation with flow rate. Table IV includes the cooling capacity variation with flow rate. The calculated pressure rise characteristic is shown in Figure 5. Cooling capacity variation is shown in Figure 6.

4.6 E46R7 FILTER UNIT HEAT LOAD

From Table I, the E46R7 filter unit has a 300-cfm capacity delivered by a .523-kw blower.

then

$$Q_{CBR} = 3413\ (.523) \quad 1,785 \text{ BTU/hr.}$$

Inlet Density

$$= 1.325\ P_A/(T_A + 460)$$

$$= 1.325\ (29.92)/585$$

$$= 0.0677 \text{ lb./ft.}^3$$

and

$$W_{CBR} = (300)(0.0677) = 20.31 \text{ lb./min.}$$

$$= 1,218.60 \text{ lb./hr.}$$

$$T_5 = T_A + Q_{CBR}/cp\ W_{CBR}$$

$$= 125 + 1,485/(.24)(1,218.6)$$

$$= 125 + 6.10 = 131.1\ ^\circ F$$

SECTION 5 | SHELTER SYSTEM ANALYSIS

Recirculation system temperatures and pressures are determined for each of the six AN/TSQ-47 shelters with CBR protection provided by the E46R7 filter unit as shown in the Figure 1 schematic and with a booster blower and the E46R7 filter unit connected as shown in Figure 8. Since the calculation procedure required a tedious iteration process, a Simple Numerical Analysis Program (SNAP) for the IBM 1620 computer, and the IBM 1620 computer was used to perform the calculations. Primary input data is tabulated in Table VII from the preceeding calculations. This section defines the analysis and tabulates the results.

5.1 ANALYTICAL PROCEDURE AND EQUATIONS

The general analytical procedure consists of assuming temperature, pressure, and flow at one point in the recirculation system, using the assumed values to calculate temperatures and pressures around the recirculation loop to and including the starting point. Then, assumed and calculated values are computed assumptions are re-estimated and calculations are repeated until assumed and calculated values are equal.

Equations and procedure based on Figure 1 are listed as follows:

Step 1. Assume T_A = Ambient Temp. °R

P_A = Ambient Pressure, in. Hg. A.

P_7 = Pressure at inlet to recirculating fan, in. Hg. A.

$= P_A + 0.3/13.59$(min. press. in. system 0.3 in. H_2O G)

W_{AC}' = Total recirculating airflow, lb./min.

T_7' = Temp. at inlet to recirculating fan., °R

Step 2. Calculate, P_1, T_1, W_1, and W_{ACL} as follows

$$\sigma_7 = 17.32\ P_7/T$$

$$\sigma_7 \Delta P_{EV} = K_{EV}(W_{AC}')^2, \text{ in. } H_2O$$

$$\Delta P_{EV} = \sigma_7 \Delta P_{EV}/\sigma_7, \text{ in. } H_2O$$

$$P_6 = P_7 + \Delta P_{EV}/13.59, \text{ in. Hg. A.}$$

At W_{AC}' in Figure 5 read $\sigma_1 \Delta P_{AC}$, in. H_2O

$$T_1 = T_7 + Q_f/cp\ W_{AC}', \ °R$$

Assume $\Delta P_{AC}'$, in. H_2O

then $P_1 = P_6 + \Delta P_{AC}'/13.59$, in. Hg. A.

$$\sigma_1 = 17.32\ P_1/T_1$$

$$\Delta P_{AC} = \sigma_1 \Delta P_{AC}/\sigma_1$$

If $\left(\Delta P_{AC} - \Delta P_{AC}\right) - .001$ is + assume

new ΔP_{AC} and repeat

$$\Delta P_{ACL} = (P_7 - P_A)\ 13.59, \text{ in. } H_2O$$

$$W_{ACL} = (\sigma_7 \Delta P_{ACL}/K_{ACL})^{.5}, \text{ lb./min.}$$

$$W_1 = W_{AC}' - W_{ACL}, \text{ lb./min.}$$

Step 3. Calculate T_2, and P_2 as follows

$$Q_{D1} = U_{D1} A_{D1} (T_A - T_1), \text{ BTU/min.}$$

$$T_2 = T_1 + Q_{D1}/c_p W_1, \ ^\circ R$$

From figure 7 at W_1 read $\sigma_1 \Delta P_{D/}$, in. H_2O

then $\Delta P_{D1} = \sigma_1 \Delta P_{D1}/\sigma_1$

$$P_2 = P_1 - \Delta P_{D1}/13.59, \text{ in. Hg. A}$$

Step 4. Calculate $T_{11}, P_3, T_{Sh}, P_{Sh}, W_{Sh}$

$$T_{11} = \left[(c_p W_1 - 0.5\, U_{Sh} A_{Sh}) T_2 + U_{Sh} A_{Sh} T_A + Q_P\right] / (c_p W_1 + .50\, U_{Sh} A_{Sh})$$

$$\sigma_2 = 17.32\, P_2/T_2$$

$$\sigma_2 \Delta P_{Sh} = K_{Sh} (W_1)^2, \text{ in. } H_2O$$

$$\Delta P_{Sh} = \sigma_2 \Delta P_{Sh}/\sigma_2, \text{ in. } H_2O$$

$$P_3 = P_2 - \Delta P_{Sh}/13.59, \text{ in. Hg. A}$$

$$T_{Sh} = 0.5\,(T_2 + T_{11}), \ ^\circ R$$

$$P_{Sh} = 0.5\,(P_2 + P_3), \text{ in. Hg. A.}$$

$$\sigma_{Sh} = 17.32\, P_{Sh}/T_{Sh}$$

$$\Delta P_{SL} = 13.59\,(P_{Sh} - P_A), \text{ in. } H_2O$$

$$W_{SL} = (\sigma_{Sh} \Delta P_{Sh}/K_{Sh})^{.5}, \text{ lb./min.}$$

Step 5. Calculate T_3,

$$W_3 = W_1 - W_{SL}, \text{ lb./min.}$$

$$T_3 = T_{11} + Q_E/c_p W_3, \ ^\circ R$$

Step 6. Calculate T_4, P_4, T_6

$$Q_{D2} = U_{D2} A_{D2} (T_A - T_3), \text{ BTU/min.}$$

$$T_4 = T_3 + Q_2/c_p W_3, \ ^\circ R$$

from Figure 7 at W_3 read $\sigma_3 \Delta P_{D2}$, in. H_2O

$$\sigma_3 = 17.32 \, P_3/T_3$$

$$\Delta P_{D2} = \sigma_3 \Delta P_{D2}/\sigma_3, \text{ in. } H_2O$$

$$P_4 = P_3 - \Delta P_{D2}/13.59, \text{ in. Hg. A}$$

$$P_4 = P_6 = P_5$$

$$W_{CBR} = W_{ACL} + W_{SL}, \text{ lb./min.}$$

$$T_6 = (W_3 \, T_4 + W_{CBR} \, T_5)/W_{AC}', \ ^\circ R$$

Step 7. Calculate T_7 W_{AC}

From Figure 6 at W_{AC}' read Q_{AC}, BTU/min.

Then $\quad Q_{EV} = Q_{AC} + Q_f$, BTU/min.

and $\quad T_7 = T_6 - Q_{EV}/c_p \, W_{AC}$

if $\quad (T_7 - T_7') - 1.00$ is + set

$T_7' = .5\,(T_7 + T_7')$ and repeat Steps 2 through 7

$\Delta P_{AC} = \Delta P_{DL} + \Delta P_{SH} + \Delta P_{D2}$, in. H_2O

From Figure 5, at $\sigma_1 \Delta P_{AC}$ read W_{AC}, lb./min.

if $(W_{AC} - W_{AC}') - 1.00$ is + set $W_{AC}' = 0.5\,(W_{AC} \quad W_{AC}')$

and repeat Steps 2 through 7.

Equations and procedures based on Figure 8 are:

Steps 1 through 4 are same as above. Step 5. Calculate T_{12} & T_{13}

$W_3 = W_1 - W_{SL}$, lb./min.

$T_{12} = T_{11} + Q_E/c_p W_3$, °R

$W_{CBR} = W_{AC} + W_{SL}$, lb./min.

$T_3 = (W_3\, T_{12} + W_{CBR}\, T_5)/W_{AC}$, $(W_{AC} = W_3 + W_{CBR})$

Step 6. Calculate T_{3A}, P_{3A}

Assume ΔP_{Bf}, in. H_2O

then $P_{3A} = P_3 + \Delta P_{Bf}/13.59$, in. Hg. A

$Q_{Bf} = K_{Bf}\, W_{Ac}'\, \Delta P_{Bf}/\rho_3$, BTU/min.

$CFM_{Bf} = W_{Ac}'/\rho_3$

$T_{3A} = T_3 + Q_{Bf}/c_p\, W_{AC}'$, °R

Step 7. Calculate T_6, P_6

$Q_{D2} = U_{D2}\,(T_A - T_{3A})$, BTU/min.

$T_6 = T_{3A} + Q_{D2}/c_p\, W_{AC}'$, °R

From Figure 7 at W_{AC}' read $\sigma_{3A}\Delta P_{D2}$, in. H_2O

$$\sigma_{3A} = 17.32\ P_{3A}/T_{3A}$$

$$\Delta P_{D2} = \sigma_{3A}\Delta P_{D2}/\sigma_{3A}, \text{ in. } H_2O$$

$$P_6 = P_4 = P_{3A} - \Delta P_{D2}/13.59$$

Step 8. Calculate T_7 and W_{AC}

From Figure 6 at W_{AC}' read Q_{AC}, BTU/min.

then $$Q_{EV} = Q_{AC} + Q_f, \text{ BTU/min.}$$

$$T_7 = T_6 - Q_{EV}/c_p W_{AC}'$$

if $(T_7 - T_7') - 1.00$ is +

set $T_7' = .5\ (T_7 + T_7')$ and repeat

Steps 2 through 8.

$$\Delta P_{AC} = \Delta P_{D1} + \Delta P_{Sh} - P_{Bf} + \Delta P_{D2}, \text{ in. } H_2O$$

From Figure 5 at $\sigma_1\Delta P_{AC}$ read W_{Ac}, lb./min.

Then if $(W_{AC} - W_{AC}') - 1.00$ is+ set

$W_{AC}' = 0.5\ (W_{AC} + W_{AC}')$ and repeat Steps 2 through 8.

5.2 COMPUTER PROGRAM

Step by step instructions of the computer program are listed on the following pages. Each line or column represents an IBM card punched as shown by the numbers to the left of the instruction. Included is the program modification for the two-air-conditioner shelters.

SNAP PROGRAM FOR CBR

PROG. COL. NO.	OPNL. INSTR.	COL. NO.	COL. NO.	COL. NO.	
1 2 3 4	X X X 8	X X X 12	X X X 16	X X X 20	INSTRUCTION
1	4				LOAD CONSTANT
.50					0.5
2	4				LOAD CONSTANT
17.32					17.32
3	4				LOAD CONSTANT
13.59					13.59
4	4				LOAD PA
29.92					$P_A = 29.92$
5	4				LOAD P_7 or P_3
29.942					P_7 or P_3
6	4				LOAD P_0
.0765					$P_0 = .0765$
7	4				LOAD Q_f
50.92					$Q_f = 50.92$ BTU/MIN.
8	4				LOAD c_p
.24					$c_p = .24$
9	4				LOAD $U_D A_D$
.4875					$U_D A_D = .4875$
10	4				LOAD T_5
591.1					$T_5 = 591.1\,°R$
11	4				LOAD TA
585.0					$T_A = 585\,°R$
12	4				LOAD ΔP-TOL.
.001					ΔP-TOL. = .001
13	4				LOAD Q_{Bf} Const.
.01193					Q_{Bf} Constant = .01193
14	4				LOAD T_7 & W_{ac}-TOL
1.00					T_7 & W_{ac}-TOL = 1.00
15	4				LOAD Q_E
396.10					$Q_E = 396.10$ BTU/MIN.
16	4				LOAD $U_{sh} A_{sh}$
2.0117					$U_{sh} A_{sh} = 2.0117$ BTU/MIN., °F
17	4				LOAD .5 $U_{sh} A_{sh}$
1.00585					$.5 U_{sh} A_{sh} = 1.00585$
18	4				LOAD Q_P

1 2 3 4	x x x 8	x x x 12	x x x 16	x x x 20	INSTRUCTION
1 0 . 0					$Q_P = 10.0$ BTU/MIN.
1 9	4				LOAD K_{Sh}
. 0 0 0	0 8 2 7				$K_{Sh} = .0000827$
2 0	4				LOAD K_{ACL}
. 0 3 2	0 4				$K_{ACL} = .03204$
2 1	4				LOAD K_{EV}
. 0 0 0	1 4 5 3				$K_{EV} = .0001453$
2 2	4				LOAD K_{SL}
. 2 7 3	4				$K_{SL} = .2734$
2 3	4				LOAD $U_{Sh}A_{Sh}T_A$
1 1 7 6 .	8 4				$U_{Sh}A_{Sh}T_A = 1176.84$ BTU/MIN
2 4	5				READ INPUT DATA CARD – w_{AC}'
2 5	5				" " " " – T_7'
TABLES					
2 6	9	2 0 8			GO TO PROG. COL. 208
2 7	1				LOAD w_{AC} VS $\sigma_I \Delta P_{AC}$ TABLE (Fig.)
2 8	1				" " " Q_{AC} " (Fig.)
2 9	1				" $\sigma_I \Delta P_{AC}$ VS w_{AC} " (Fig. –)
TEMP. &	PRESS. CALCULATION		ROUTINE FOLLOWS		
3 0	5 1	3 0	5		SET. PROG. COL. 30 = $P_7 = 29.942$
3 1	5 4	3 0	2		$17.32\ P_7$
3 2	5 5	3 1	2 5		$\sigma_7 = 17.32 P_7 / T_7'$
3 3	5 4	2 4	2 4		$(w_{AC}')^2$
3 4	5 4	3 3	2 1		$\sigma_7 \Delta P_{EV} = (w_{AC}')^2 K_{EV}$
3 5	5 5	3 4	3 2		$\Delta P_{EV} = \sigma_7 \Delta P_{EV} / \sigma_7$
3 6	5 5	3 5	3		$\Delta P_{EV} / 13.59$
3 7	5 2	3 6	3 0		$P_6 = P_7 + \Delta P_{EV} / 13.59$
3 8	1 0	2 4	2		$\sigma_I \Delta P_{AC}$, fr. Table 2 at w_{AC}'
3 9	5 4	2 4	8		$C_p\ w_{AC}'$
4 0	5 5	7	3 9		$Q_F / C_p w_{AC}'$
4 1	5 2	2 5	4 0		$T_1 = T_7' + Q_F / C_p w_{AC}'$
4 2	5 1	4 2	3 8		$\Delta P_{AC}' = \sigma_I \Delta P_{AC}$
4 3	5 5	4 2	3		$\Delta P_{AC}' / 13.59$
4 4	5 2	4 3	3 7		$P_1 = P_6 + \Delta P_{AC}' / 13.59$
4 5	5 4	4 4	2		$17.32\ P_1$

1 2 3 4	x x x 8	x x x 12	x x x 16	x x x 20	INSTRUCTION
46	55	45	41		$\sigma_1 = 17.32 P_1 / T_1$
47	55	38	46		$\Delta P_{AC} = \sigma_1 \Delta P_{AC} / \sigma_1$
48	53	42	47		$\Delta P_{AC}' - \Delta P_{AC}$
49	28	48			$\lvert \Delta P_{AC}' - \Delta P_{AC} \rvert$
50	53	49	12		$\lvert \Delta P_{AC}' - \Delta P_{AC} \rvert - .001$
51	8	54	54	52	If Col. 50 is − or 0 trans. 54 if + 52
52	51	42	47		Set $\Delta P_{AC}' = \Delta P_{AC}$
53	9	43			Go to Prog. Col. 43
54	53	30	4		$P_7' - P_A$
55	54	54	3		$\Delta P_{ACL} = (P_7 - P_A) 13.59$
56	54	55	32		$\sigma_7 \Delta P_{ACL}$
57	55	56	20		$\omega_{ACL}^2 = \sigma_7 \Delta P_{ACL} / K_{ACL}$
58	56	57	1		$\omega_{ACL} = (\sigma_7 \Delta P_{ACL} / K_{ACL})^{.5}$
59	53	24	58		$\omega_1 = \omega_{AC} - \omega_{ACL}$
60	54	59	8		$C_p \omega_1$
61	53	11	41		$T_A - T_1$
62	54	61	9		$Q_{D1} = U_{A1} A_{D1} (T_A - T_1)$
63	55	62	60		$Q_{D1} / C_p \omega_1$
64	52	41	63		$T_2 = T_1 + Q_{D1} / C_p \omega_1$
65	17	59			$LN\ \omega_1$
66	10	65	1		$LN\ \sigma_1 \Delta P_{D1}$
67	18	66			$\sigma_1 \Delta P_{D1}$
68	55	67	46		$\Delta P_{D1} = \sigma_1 \Delta P_{D1} / \sigma_1$
69	55	68	3		$\Delta P_{D1} / 13.59$
70	53	44	69		$P_2 = P_1 - \Delta P_{D1} / 13.59$
71	54	70	2		$17.32 P_2$
72	55	71	64		$\sigma_2 = 17.32 P_2 / T_2$
73	54	59	59		ω_1^2
74	54	73	19		$\sigma_2 \Delta P_{sh} = K_{sh} \omega_1^2$
75	55	74	72		$\Delta P_{sh} = \sigma_2 \Delta P_{sh} / \sigma_2$
76	55	75	3		$\Delta P_{sh} / 13.59$
77	53	70	76		$P_3 = P_2 - \Delta P_{sh} / 13.59$
78	53	5	77		$P_3' - P_3$
79	8	83	83	80	If 78 − or 0 trans. 83, if + trans 80
80	52	30	78		$P_7 = P_7' + (P_3' - P_3)$

1 2 3 4	x x x 8	x x x 12	x x x 16	x y y 20	INSTRUCTION
81	51	30	80		SET PROG COL. 30 = 80
82	9	31			Transfer to Prog. Col. 31
83	53	5	30		$P_7' - P_7$
84	9	203			Transfer to Col. 203
85	51	30	5		Set Col. 30 = Col. 5
86	9	31			Transfer to Col. 31
87	28	78			$\lvert P_3' - P_3 \rvert$
88	53	87	12		$\lvert P_3' - P_3 \rvert - .001$
89	8	93	93	90	IF 88 −or 0 Trans. 93, if + trans. 90
90	52	78	30		$P_7 = P_7' + (P_3' - P_3)$
91	51	30	90		Set Col. 30 = 90
92	9	31			Transfer to Col. 31
93	53	60	17		$C_p W_1 - .5 U_{sh} A_{sh}$
94	54	93	64		$(C_p W_1 - .5 U_{sh} A_{sh}) T_2$
95	52	94	23		$(C_p W_1 - .5 U_{sh} A_{sh}) T_2 + U_{sh} A_{sh} T_A$
96	52	95	18		" + " + Q_P
97	52	60	17		$C_p W_1 + .5 U_{sh} A_{sh}$
98	55	96	97		$T_{11} = \frac{(C_p W_1 - .5 U_{sh} A_{sh}) T_2 + U_{sh} A_{sh} T_A + Q_P}{C_p W_1 + .5 U_{sh} A_{sh}}$
99	52	98	64		$T_{11} + T_2$
100	54	99	1		$T_{sh} = .5(T_{11} + T_2)$
101	52	70	77		$P_2 + P_3$
102	54	101	1		$P_{sh} = .5(P_2 + P_3)$
103	54	102	2		$17.32\ P_{sh}$
104	55	103	100		$\sigma_{sh} = 17.32\ P_{sh} / T_{sh}$
105	53	102	4		$P_{sh} - P_A$
106	54	105	3		$\Delta P_{SL} = (P_{sh} - P_A) 13.59$
107	54	106	104		$\sigma_{sh} \Delta P_{SL}$
108	55	107	22		$W_{SL}^2 = \sigma_{sh} \Delta P_{SL} / K_{SL}$
109	56	108	1		$W_{SL} = (\sigma_{sh} \Delta P_{SL} / K_{SL})^{.5}$
110	53	59	109		$W_3 = W_1 - W_{SL}$
111	54	110	8		$C_p W_3$
112	55	15	111		$Q_E / C_p W_3$
113	52	98	112		$T_{12} = T_{11} + Q_E / C_p W_3$
114	54	77	2		$17.32\ P_3$
115	51	115	208		SET COL. 115 = ΔP_{BF}

1 2 3 4	x x x 8	x x x 12	x x x 16	x x x 20	INSTRUCTION
1 1 6	8	1 1 7	1 1 7	1 5 6	If 115 − or 0 Trans. 117, if + Trans 156
1 1 7	5 5	1 1 4	1 1 3		$\sigma_{12} = 17.32 P_3 / T_{12}$
1 1 8	1 7	1 1 0			$\angle N\ W_3$
1 1 9	1 0	1 1 8	1		$\angle N\ \sigma_{12}\ \Delta P_{D2}$
1 2 0	1 8	1 1 9			$\sigma_{12}\ \Delta P_{D2}$
1 2 1	5 5	1 2 0	1 1 7		$\Delta P_{D2} = \sigma_{12} \Delta P_{D2} / \sigma_{12}$
1 2 2	5 3	1 1	1 1 3		$T_A - T_{12}$
1 2 3	5 4	1 2 2	9		$Q_{D2} = U_{D2} A_{D2} (T_A - T_{12})$
1 2 4	5 5	1 2 3	1 1 1		$Q_{D2} / c_p W_3$
1 2 5	5 2	1 2 4	1 1 3		$T_4 = T_{12} + Q_{D2} / c_p W_3$
1 2 6	5 4	1 1 0	1 2 5		$W_3 T_4$
1 2 7	5 2	5 8	1 0 9		$W_{CBR} = W_{ACL} + W_{SL}$
1 2 8	5 4	1 2 7	1 0		$W_{CBR} T_5$
1 2 9	5 2	1 2 6	1 2 8		$W_3 T_4 + W_{CBR} T_5$
1 3 0	5 5	1 2 9	2 4		$T_6 = (W_3 T_4 + W_{CBR} T_5) / W_{AC}'$
1 3 1	1 0	2 4	3		Q_{AC} (Table 3 look-up with W_{AC}')
1 3 2	5 2	1 3 1	7		$Q_{EV} = Q_{AC} + Q_F$
1 3 3	5 5	1 3 2	3 9		$Q_{EV} / c_p W_{AC}'$
1 3 4	5 3	1 3 0	1 3 3		$T_7 = T_6 - Q_{EV} / c_p W_{AC}'$
1 3 5	5 3	1 3 4	2 5		$T_7 - T_7'$
1 3 6	2 8	1 3 5			$\lvert T_7 - T_7' \rvert$
1 3 7	5 3	1 3 6	1 4		$\lvert T_7 - T_7' \rvert \div 1.00$
1 3 8	8	1 4 3	1 4 3	1 3 9	If 137 − or 0 Trans. 143, if + trans. 139
1 3 9	5 2	1 3 4	2 5		$T_7 + T_7'$
1 4 0	5 4	1 3 9	1		$T_7'' = .5 (T_7 + T_7)'$
1 4 1	5 1	2 5	1 4 0		Set $T_7' = T_7''$
1 4 2	9	3 2			Trans. to 32
1 4 3	5 2	6 8	7 5		$\Delta P_{D1} + \Delta P_{Sh}$
1 4 4	5 2	1 4 3	1 2 1		$\Delta P_{AC} = \Delta P_{D1} + \Delta P_{Sh} + \Delta P_{D2}$
1 4 5	5 4	4 6	1 4 4		$\sigma_I \Delta P_{AC}$
1 4 6	1 0	1 4 5	4		W_{AC} (Table 4 lookup with $\sigma_I \Delta P_{AC}$)
1 4 7	5 3	1 4 6	2 5		$W_{AC} - W_{AC}'$
1 4 8	2 8	1 4 7			$\lvert W_{AC} - W_{AC}' \rvert$
1 4 9	5 3	1 4 8	1 4		$\lvert W_{AC} - W_{AC}' \rvert - 1.00$
1 5 0	8	1 5 1	1 5 1	1 5 2	If 149 − or 0 Trans. 151, if + trans. 152

1 2 3 4	x x x 8	x x x 12	x x x 16	x x x 20	
151	9	218			Trans. to 218
152	52	146	24		$W_{AC} + W_{AC}'$
153	54	152	1		$W_{AC}'' = (W_{AC} + W_{AC}'')/2$
154	51	24	153		$W_{AC}' = W_{AC}''$
155	9	33			Trans. to 33
156	54	110	113		$W_3 T_{12}$
157	52	58	109		$W_{CBR} = W_{ACL} + W_{SL}$
158	54	157	10		$W_{CBR} T_5$
159	52	156	158		$W_3 T_{12} + W_{CBR} T_5$
160	55	159	24		$T_3 = (W_3 T_{12} + W_{CBR} T_5)/W_{AC}'$
161	55	114	160		$\sigma_3 = 17.32 P_3/T_3$
162	54	161	6		$\rho_3 = \rho_0 \sigma_3$
163	55	24	162		$CFM_{BF} = W_{AC}/\rho_3$
164	54	163	13		$(CFM_{BF})(Q_{BF}(\text{const.}))$
165	54	164	115		$Q_{BF} = (CFM_{BF})(Q_{BF}(\text{const.}))(\Delta P_{BF})$
166	55	165	39		$Q_{BF}/c_p W_{AC}$
167	52	160	166		$T_{3A} = T_3 + Q_{BF}/c_p W_{AC}$
168	55	115	3		$\Delta P_{BF}/13.59$
169	52	77	168		$P_{3A} = P_3 + \Delta P_{BF}/13.59$
170	54	169	2		$17.32 P_{3A}$
171	55	170	167		$\sigma_{3A} = 17.32 P_{3A}/T_{3A}$
172	17	24			$LN\ W_{AG}$
173	10	172	1		$LN\ \sigma_{3A} \Delta P_{D2}$
174	18	173			$\sigma_{3A} \Delta P_{D2}$
175	55	174	171		$\Delta P_{D2} = \sigma_{3A} \Delta P_{D2}/\sigma_{3A}$
176	53	11	167		$(T_A - T_{3A})$
177	54	176	9		$Q_{D2} = U_{D2} A_{D2} (T_A - T_{3A})$
178	55	177	39		$Q_{D2}/c_p W_{AC}$
179	52	167	178		$T_6 = T_{3A} + Q_{D2}/c_p W_{AC}$
180	10	24	3		Q_{AC}
181	52	180	7		$Q_{EV} = Q_{AC} + Q_F$
182	55	181	39		$Q_{EV}/c_p W_{AC}$
183	53	179	182		$T_7 = T_6 - Q_{EV}/c_p W_{AC}$
184	53	183	25		$T_7 - T_7'$
185	28	184			$\lvert T_7 - T_7' \rvert$

1 2 3 4	x x x 8	x y y 12	x x y 16	y x y 20	INSTRUCTION
186	53	185	14		$\lvert T_7 - T_7' \rvert - 1.0$
187	8	191	191	188	If 186 − or 0 Trans 191, if + trans. 188
188	52	183	25		$T_7 + T_7'$
189	54	188	1		$T_7'' = .5(T_7 + T_7')$
190	9	216			Trans. to 32
191	52	68	75		$\Delta P_{D1} + \Delta P_{sh}$
192	9	211			Trans. to 211
193	54	212	46		$\sigma_1 \Delta P_{AC}$
194	10	193	4		W_{AC}
195	53	194	24		$W_{AC} - W_{AC}'$
196	28	195			$\lvert W_{AC} - W_{AC}' \rvert$
197	53	196	14		$\lvert W_{AC} - W_{AC}' \rvert - 1.00$
198	8	218	218	199	If 197 − or 0 Trans. 218, If + trans. 199
199	52	194	24		$W_{AC} + W_{AC}'$
200	54	199	1		$W_{AC}'' = .5(W_{AC} + W_{AC}')$
201	51	24	200		Set $W_{AC}' = W_{AC}''$
202	9	33			Trans. 33
203	28	83			$\lvert P_7' - P_7 \rvert$
204	53	203	12		$\lvert P_7' - P_7 \rvert - .001$
205	8	93	93	206	If 204 − or 0 tran. 93, if + trans. 206
206	51	206	83		$P_7' - P_7$
207	8	87	93	85	If 206 − trans 87, 0 trans. 93, + trans. 85
208	5				Read Input data Card − ΔP_{Bf}
209	1				Load ω vs $\sigma \Delta P_D$ Table (Fig.)
210	9	30			Trans. 30
211	52	191	175		$\Delta P_{D1} + \Delta P_{sh} + \Delta P_{D2}$
212	53	211	115		$\Delta P_{AC} = \Delta P_{D1} + \Delta P_{sh} + \Delta P_{D2} - \Delta P_{Bf}$
213	8	214	193	193	If 212 − tran. 214, if 0 or + trans. 193
214	51	212	198		Set $\Delta P_{AC} = 0$
215	9	193			Trans. 193
216	51	25	189		Set $T_7' = T_7''$
217	9	32			Trans. to 32
218	51	218	218		Set 218 = 218'
END					
INPUT DATA CARDS		W_{AC}', T_7',	& ΔP_{Bf}	follow End.	

1 2 3 4	x x y 8	x x y 12	x y x 16	y y y 20	INSTRUCTION
SNAP PROGRAM CHANGES TO CALCULATE SHELTER SYSTEM WITH 2 AIR CONDITIONERS					
73	9	218			TRANS. 218
218	55	59			$2W_1 = W_1/.5$
219	54	218	218		$(2W_1)^2$
220	54	218	8		$C_p(2W_1)$
221	9	74			Trans. 74
74	54	219	19		$\sigma_2 \Delta P_{sh} = K_{sh}(2W_1)^2$
93	53	220	17		$C_p(2W_1) - U_{sh}A_{sh}/2$
97	52	220	17		$C_p(2W_1) + .5 U_{sh}A_{sh}$
110	53	218	109		$2W_1 - W_{SL} = 2W_3$
118	9	222			Trans. 222
222	54	110	1		$W_3 = .5(2W_3)$
223	17	222			$LN\ W_3$
224	54	222	8		$C_p W_3$
225	9	119			Trans. 119
119	10	223	1		$LN\ \sigma_{12}\Delta P_{02}$
124	55	123	224		$Q_{02}/C_p W_3$
126	54	222	125		$W_3 T_4$
127	9	226			Trans. 226
226	54	109	1		$.5 W_{SL}$
227	52	58	226		$W_{CBR} = W_{ACU} + .5 W_{SL}$
228	9	128			Trans. 128
128	54	227	10		$W_{CBR} T_5$
156	9	229			Trans. 229
229	54	110	1		$W_3 = .5(2W_3)$
230	54	109	1		$.5 W_{SL}$
231	54	229	113		$W_3 T_{12}$
232	9	157			Trans. 157
157	52	230	58		$W_{CBR} = .5 W_{SL} + W_{ACU}$
159	52	231	158		$W_3 T_{12} + W_{CBR} T_5$
233	51	233	233		NEW PROG. END.

5.3 Data

Results of the computer runs are tabulated in the following sections.

ΔP_{BF} IN. H_2O	$\dot{W}_{AC}$ lb/min.	P_1 IN. HG. A	P_2 IN. HG. A.	P_3 IN. HG. A	P_{3A} IN. HG. A	P_6 IN. HG. A	P_7 IN. HG. A	P_{Sh} IN. HG. A.	ΔP_{SL} IN. H_2O
AN/TPS-35 T_A = 125, P_A = 29.92									
0	75.00	30.165	30.107	30.074	—	30.005	29.942	30.090	2.3225
1	84.27	30.155	30.080	30.037	30.110	30.022	29.942	30.058	1.8835
2	92.82	30.147	30.053	30.000	30.148	30.040	29.942	30.027	1.4541
3	100.52	30.137	30.023	29.961	30.182	30.057	29.942	29.992	.984
4	107.00	30.143	30.012	29.942	30.236	30.089	29.956	29.977	.779
4.5	110.00	30.153	30.015	29.942	30.273	30.114	29.974	29.979	.803
AN/TPN-14, T_A = 125, P_A = 29.92									
0	76.62	30.152	30.094	30.061	—	30.005	29.942	30.078	2.150
1	85.00	30.144	30.071	30.029	30.103	30.020	"	30.050	1.771
2	94.12	30.135	30.043	29.992	30.139	30.037	"	30.017	1.326
3	101.27	30.126	30.016	29.957	30.177	30.053	"	29.986	.909
4	108.53	30.137	30.010	29.942	30.236	30.093	29.964	29.976	.762
4.5	111.88	30.148	30.013	"	30.273	30.120	29.982	29.977	.787
AN/TSW-6, T_A = 125, P_A = 29.92									
0	76.57	30.161	30.101	30.066	—	30.007	29.942	30.084	2.229
1	84.42	30.153	30.078	30.035	30.109	30.022	29.942	30.056	1.860
2	93.00	30.145	30.051	29.999	30.146	30.039	29.942	30.025	1.434
3	100.84	30.134	30.021	29.959	30.180	30.056	29.942	29.990	.958
4	107.00	30.140	30.011	29.942	30.236	30.087	29.956	29.976	.772
4.5	110.62	30.153	30.016	29.942	30.273	30.118	29.977	29.979	.806
AN/TRN-17 T_A = 125, P_A = 29.92									
0	76.69	30.144	30.089	30.055	—	30.002	29.942	30.073	2.079
1	85.64	30.134	30.063	30.023	30.097	30.017	29.942	30.043	1.681
2	94.40	30.127	30.038	29.989	30.136	30.034	29.942	30.013	1.275
3	102.37	30.116	30.009	29.951	30.171	30.049	29.942	29.980	.817
4	110.04	30.132	30.008	29.942	30.236	30.097	29.971	29.975	.752
4.5	112.84	30.143	30.012	29.942	30.273	30.121	29.986	29.977	.776

ΔP_{BF} IN. H_2O	T_1 °R	T_2 °R	T_{11} °R	T_{12} °R	T_3 °R	T_4 °R	T_6 °R	T_7 °F	T_{sh} °F
AN/TPS-35, T_A=125, P_A=29.92									
0	92.82	93.73	97.72	121.56	121.56	121.66	122.39	90.00	95.72
1	94.21	94.98	98.40	119.36	120.12	120.85	120.95	91.69	96.69
2	93.98	94.68	97.82	116.65	117.46	118.91	119.04	91.69	96.25
3	95.11	95.73	98.54	115.78	116.51	118.68	118.81	93.00	97.14
4	102.98	103.41	105.48	121.73	122.21	125.13	125.12	101.00	104.45
4.5	105.92	106.29	108.10	124.01	124.41	127.71	127.66	104.00	107.19
AN/TPN-14, T_A=125, P_A=29.92									
0	64.76	66.43	73.28	90.05	90.05	91.05	94.09	62.00	69.85
1	66.49	67.94	73.98	88.92	91.68	92.37	93.15	64.00	70.96
2	66.25	67.56	73.04	86.38	88.86	90.23	90.98	64.00	70.30
3	67.09	68.29	73.33	85.64	87.81	89.87	90.58	65.00	70.81
4	74.95	75.92	80.10	91.67	93.82	96.59	97.13	73.00	78.01
4.5	77.89	78.79	82.65	93.94	96.18	99.31	99.78	76.00	80.72
AN/TSW-6, T_A=125, P_A=29.92									
0	86.77	87.82	98.42	114.40	114.40	114.70	115.93	84.00	93.12
1	88.51	89.42	98.75	113.09	114.26	114.98	115.22	86.00	94.08
2	88.28	89.12	97.70	110.59	111.73	113.16	112.88	86.00	93.40
3	89.10	89.84	97.68	109.46	110.48	112.63	112.88	87.00	93.76
4	96.42	96.98	103.15	114.29	115.15	118.03	118.16	94.44	100.07
4.5	98.69	99.20	104.84	115.70	116.59	119.84	119.94	96.78	102.02
AN/TRN-17 T_A=125, P_A=29.92									
0	45.23	47.43	54.68	66.40	66.40	68.08	72.92	42.47	51.06
1	43.40	45.41	52.06	67.42	66.93	67.58	68.94	40.93	48.73
2	44.48	46.27	52.24	61.55	65.44	66.76	68.01	42.24	49.26
3	41.88	43.58	49.27	57.77	61.26	63.21	64.44	39.81	46.43
4	50.27	51.71	56.58	64.58	68.43	71.08	72.08	48.35	54.15
4.5	55.84	57.14	61.59	69.42	73.27	76.27	77.15	53.96	59.36

ΔP_{BF} IN. H_2O	$\sigma_I \Delta P_{AC}$ IN. H_2O	ΔP_{D1} IN. H_2O	ΔP_{Sh} IN. H_2O	ΔP_{D2} IN. H_2O	ΔP_{AC} IN. H_2O	$\sigma_I \Delta P_{AC}'$ IN. H_2O	W_{ACU} lb/min	W_{SL} lb/min.	W_{CBR} lb/min.
AN/TPN-35 T_A=125, P_A=29.92									
0	2.050	.783	.456	.756	1.995	1.886	2.966	2.823	5.789
1	1.702	1.029	.582	1.169	1.780	1.677	2.962	2.538	5.500
2	1.381	1.285	.712	1.443	1.440	1.357	2.962	2.230	5.192
3	1.023	1.547	.841	1.721	1.109	1.042	2.958	1.832	4.790
4	.680	1.777	.955	1.996	.727	.674	3.805	1.619	5.423
4.5	.486	1.871	1.001	2.129	.501	.462	4.609	1.640	6.248
AN/TPN-14, T_A=125, P_A=29.92									
0	1.988	.780	.452	.752	1.984	1.975	3.045	2.781	5.825
1	1.675	.995	.563	1.134	1.692	1.678	3.039	2.520	5.559
2	1.323	1.261	.697	1.418	1.375	1.364	"	2.181	5.220
3	.988	1.492	.811	1.663	.965	.956	3.036	1.804	4.840
4	.581	1.728	.927	1.960	.615	.600	4.277	1.640	5.918
4.5	.367	1.832	.978	2.104	.414	.402	5.080	1.662	6.742
AN/TSN-6 T_A=125 P_A=29.92									
0	1.990	.813	.471	.786	2.069	1.977	2.983	2.771	5.754
1	1.696	1.022	.578	1.162	1.762	1.678	2.977	2.528	5.505
2	1.373	1.277	.707	1.435	1.419	1.351	2.977	2.220	5.199
3	1.008	1.541	.838	1.715	1.093	1.039	2.974	1.813	4.787
4	.680	1.756	.944	1.971	.671	.630	3.811	1.618	5.429
4.5	.447	1.865	.996	2.127	.489	.457	4.781	1.650	6.431
AN/TRN-17 T_A=125 P_A=29.92									
0	1.986	.751	.436	.721	1.907	1.972	3.103	2.784	5.887
1	1.652	.966	.547	1.101	1.615	1.674	3.106	2.508	5.616
2	1.315	1.213	.671	1.364	1.248	1.248	3.104	2.182	5.286
3	.935	1.454	.789	1.621	.864	.864	3.112	1.750	4.862
4	.483	1.687	.903	1.928	.518	.518	4.709	1.666	6.375
4.5	.306	1.784	.951	2.057	.291	.291	5.335	1.684	7.019

ΔP_{BF} IN. H_2O	Q_{DL} BTU/HR	Q_{D2} BTU/HR	Q_a BTU/HR	Q_{SF} BTU/HR	Q_{AC} BTU/HR.	CFM_{BF}			
AN/TPS-35 T_A =125, P_A =29.92									
0	940.98	100.41		0	31,300	0			
1	900.54	121.39		879.18	32,572	1228			
2	907.32	178.13		1930.44	32,829	1348			
3	874.26	184.77		3134.82	34,352	1460			
4	643.98	-3.83		4495.98	35,000	1570			
4.5	557.86	-79.38		5219.40	35,300	1620			
AN/TPN-14, T_A =125, P_A =29.92									
0	1761.72	1022.22		0	31,526	0			
1	1711.20	954.36		843.60	32,670	1179			
2	1718.34	1016.82		1862.58	33,110	1301			
3	1693.68	1027.32		3001.38	34,427	1398			
4	1463.82	830.70		4338.24	35,153	1515			
4.5	1377.78	751.14		5052.24	35,476	1569			
AN/TSW-6 T_A =125 P_A =29.92									
0	1118.22	310.02		0	31520	0			
1	1067.22	292.91		871.92	32591	1218			
2	1074.00	346.11		1915.02	32865	1338			
3	1049.94	361.78		3112.08	34384	1449			
4	835.86	203.66		4441.44	35000	1551			
4.5	769.32	150.66		5178.66	35357	1608			
AN/TRN-17 T_A =125 P_A =29.92									
0	2333.04	1713.90		0	31537	0			
1	2386.56	1679.28		84.98	32616	1134			
2	2355.00	1703.40		1787.10	33152	1248			
3	2430.96	1807.08		2887.44	34537	1345			
4	2185.62	1576.98		4196.82	35304	1466			
4.5	2022.90	1425.12		4885.98	35566	1517			

ΔP_{or} in H_2O	W_{AC} lb/min	P_1 in Hg A.	P_2 in Hg A	P_3 in Hg. A.	P_{3A} in Hg. A.	P_6 in Hg A.	P_7 in Hg A.	P_{3h} in Hg. A.	ΔP_{3L} in H_2O
AN/TS W-5		T_A = 125		P_A = 29.92					
0	76.78	30.157	30.098	30.064	—	30.007	29.942	30.081	2.1920
1	85.00	30.149	30.074	30.031	30.105	30.021	29.942	30.052	1.8061
2	93.59	30.142	30.048	29.996	30.143	30.039	29.942	30.022	1.3875
3	101.25	30.131	30.018	29.957	30.178	30.056	29.942	29.987	.9228
4	107.85	30.140	30.011	29.942	30.236	30.091	29.961	29.976	.8692
4.5	111.05	30.151	30.015	29.942	30.273	30.118	29.979	29.972	.7950
AN/TSC-23		T_A = 125		P_A = 29.92					
0	76.73	30.165	30.104	30.068	—	30.009	29.942	30.086	2.2640
1	84.20	30.157	30.081	30.038	30.111	30.023	29.942	30.059	1.8971
2	93.00	30.151	30.054	30.001	30.148	30.042	29.942	30.027	1.4663
3	100.00	30.140	30.026	29.964	30.185	30.057	29.942	29.999	1.0274
4	107.00	30.145	30.013	29.942	30.236	30.091	29.957	29.998	.7855
4.5	110.00	30.156	30.017	29.942	30.273	30.117	29.975	29.979	.8127
AN/TSC-23		T_A = 100		P_A = 29.92					
0	76.76	30.155	30.097	30.063	—	30.006	29.942	30.080	2.174
1	85.00	30.146	30.072	30.030	30.104	30.021	29.942	30.051	1.790
2	93.71	30.140	30.047	29.995	30.142	30.038	29.942	30.021	1.375
3	100.96	30.130	30.019	29.958	30.179	30.054	29.942	29.988	.936
4	108.09	30.139	30.010	29.942	30.236	30.092	29.962	29.976	.768
4.5	111.32	30.150	30.014	29.942	30.273	30.119	29.998	29.978	.793
AN/TSC-23		T_A = 75		P_A = 29.92					
0	76.80	30.145	30.089	30.057	—	30.003	29.942	30.073	2.086
1	85.00	30.137	30.066	30.026	30.100	30.017	29.942	30.046	1.722
2	94.17	30.130	30.040	29.990	30.138	30.035	29.942	30.015	1.301
3	101.95	30.119	30.011	29.953	30.174	30.050	29.942	29.982	.849
4	109.60	30.133	30.008	29.942	30.236	30.096	29.969	29.975	.754
4.5	113.01	30.145	30.012	29.942	30.273	30.124	29.987	29.977	.781

ΔP_{BF} in. H_2O	Q_{DL} BTU/HR	Q_{DZ} BTU/HR		Q_{DF} BTU/HR	Q_{AC} BTU/HR	CFM_{BF}			
AN/TS W-5		T_A = 125		P_A = 29.92					
0	1338.36	590.70		0	31549	0			
1	1347.66	610.74		861.48	32670	1204			
2	1279.20	598.54		1898.40	32986	1326			
3	1270.32	620.46		3076.80	34426	1433			
4	1094.16	468.52		4406.76	35085	1539			
4.5	986.70	391.17		5131.62	35399	1593			
AN/TSC-23		T_A = 125		P_A = 29.92					
0	755.94	43.70		0	31542	0			
1	782.16	22.84		883.56	32563	1234			
2	606.00	84.79		1964.10	32865	1372			
3	645.78	238.68		3156.60	34300	1470			
4	988.86	181.70		4542.66	35000	1587			
4.5	349.88	279.13		5280.66	35300	1639			
AN/TSC-23		T_A = 100		P_A = 29.92					
0	753.96	45.80		0	31547	0			
1	778.44	27.32		853.74	32670	1193			
2	641.16	46.62		1890.84	33010	1321			
3	684.54	19.74		3043.56	34396	1417			
4	499.53	136.12		4383.06	35109	1531			
4.5	382.00	240.78		5107.02	35423	1586			
AN/TSC-23		T_A = 75		P_A = 29.92					
0	753.96	46.41		0	31552	0			
1	786.90	34.81		815.28	32670	1139			
2	685.92	8.10		1810.74	33105	1265			
3	716.46	57.00		2929.56	34495	1364			
4	528.39	101.52		4238.04	35260	1480			
4.5	415.58	200.65		4943.88	35581	1535			

ΔP_{or} IN. H_2O	T_1 °F	T_2 °F	T_N °F	T_{12} °F	T_3 °F	$T_{BA\,out}$ °F	T_6 °F	T_7 °F	T_{54} °F
AN/TS W-5		T_A = 125	P_A = 29.92						
0	79.24	80.50	87.51	104.80	104.80	105.37	106.83	76.48	84.00
1	78.92	80.06	86.45	101.95	103.41	104.12	104.61	76.43	83.25
2	81.26	82.24	87.86	101.85	103.12	104.53	104.98	79.00	85.05
3	81.57	82.46	87.64	100.50	101.67	103.78	104.21	79.47	85.05
4	87.59	88.32	92.80	104.95	106.14	108.98	109.28	85.62	90.56
4.5	91.26	91.91	96.02	107.90	109.10	112.31	112.54	89.35	93.96
AN/TSC-23		T_A = 125	P_A = 29.92						
0	99.15	99.86	102.62	126.49	126.49	126.45	126.71	96.39	101.24
1	98.25	98.92	101.48	123.09	123.49	124.21	124.23	95.74	100.20
2	104.28	104.74	106.79	126.22	126.43	127.29	127.83	102.00	105.77
3	102.92	103.38	105.34	123.31	123.62	125.81	125.80	100.80	104.36
4	109.35	109.66	111.26	128.13	128.26	131.21	131.09	107.37	110.46
4.5	113.03	113.26	114.69	131.21	131.21	134.54	134.36	111.11	113.98
AN/TSC-23		T_A = 100,	P_A = 29.92						
0	74.22	74.93	77.68	101.56	101.56	101.52	101.76	71.46	76.30
1	73.38	74.04	76.57	97.97	98.36	99.06	99.08	70.89	75.30
2	78.07	78.56	80.65	99.93	100.19	101.59	101.56	75.81	79.61
3	76.59	77.08	79.07	96.88	97.23	99.32	99.33	74.49	78.07
4	82.92	83.25	84.89	101.64	101.83	104.65	104.56	80.96	84.07
4.5	86.94	87.18	88.63	105.00	105.04	108.23	108.08	85.03	87.91
AN/TSC-23		T_A = 75,	P_A = 29.92						
0	49.22	49.93	52.69	76.58	76.58	76.54	76.77	46.46	51.31
1	48.09	48.76	51.31	72.74	73.14	73.81	73.83	45.60	50.03
2	51.54	52.07	54.21	73.41	73.73	75.07	75.07	49.29	53.14
3	50.50	51.00	53.03	70.67	71.05	73.05	73.08	48.42	52.02
4	56.93	57.28	58.95	75.53	75.78	78.47	78.40	55.00	58.11
4.5	60.79	61.06	62.54	78.71	78.82	81.86	81.73	58.91	61.80

ΔP_{BF} IN. H_2O	$G_2 \Delta P_{AC}$ IN H_2O	ΔP_{DL} IN H_2O	ΔP_{SH} IN H_2O	ΔP_{D2} IN H_2O	ΔP_{LC} IN H_2O	$\sigma_2 \Delta P_{AC}$ IN H_2O	W_{ACL} lb/min	W_{SL} lb/min	W_{OBR} lb/min
AN/TS IV-5		T_A = 125		P_A = 29.92					
0	1.982	.806	.467	.812	2.085	2.020	3.013	2.771	4.389
1	1.675	1.020	.577	1.158	1.754	1.754	3.004	2.516	4.261
2	1.349	1.279	.708	1.434	1.420	1.420	2.996	2.200	4.097
3	.988	1.533	.834	1.704	1.071	1.071	2.995	1.793	3.892
4	.625	1.751	.941	1.975	.666	.667	4.072	1.629	4.886
4.5	.419	1.854	.991	2.118	.463	.463	4.876	1.651	5.701
AN/TSC-23		T_A = 125		P_A = 29.92					
0	1.984	.836	.484	.843	2.163	2.021	2.949	2.773	4.336
1	1.705	1.034	.586	1.174	1.794	1.679	2.951	2.540	4.221
2	1.373	1.315	.729	1.472	1.516	1.403	2.934	2.220	4.045
3	1.048	1.550	.845	1.722	1.117	1.036	2.938	1.860	3.867
4	.680	1.799	.966	2.016	.780	.715	3.799	1.617	4.607
4.5	.486	1.895	1.014	2.154	.563	.513	4.605	1.639	5.425
AN/TSC-23		T_A = 100		P_A = 29.92					
0	1.983	.798	.462	.806	2.066	2.020	3.018	2.780	4.407
1	1.675	1.009	.571	1.147	1.727	1.690	3.019	2.523	4.281
2	1.344	1.274	.705	1.430	1.410	1.367	3.005	2.202	4.106
3	1.002	1.509	.821	1.680	1.009	.982	3.009	1.818	3.918
4	.609	1.742	.935	1.970	.647	.622	4.144	1.637	4.962
4.5	.403	1.847	.986	2.114	.447	.427	4.940	1.657	5.769
AN/TSC-23		T_A = 95		P_A = 29.92					
0	1.982	.760	.440	.770	1.970	2.020	3.091	2.788	4.485
1	1.675	.959	.543	1.096	1.598	1.641	3.094	2.535	4.361
2	1.325	1.224	.676	1.378	1.278	1.303	3.082	2.195	4.180
3	.955	1.466	.796	1.636	.898	.917	3.085	1.775	3.973
4	.512	1.697	.909	1.937	.543	.549	4.582	1.663	5.413
4.5	.296	1.806	.962	2.085	.352	.353	5.357	1.686	6.200

REFERENCES

1. GD/Convair Report GDC-63-222, "Analysis and Design of CBR Protection for the AN/TSQ-47 System, Progress Report No. 1."

2. Chemical Corps Board Report 10-50.

3. CRDL R3146 Oct. 1963, "Collective Protection for Field-Type Nike Hercules Guided Missile Vans" by D. Mears.

4. Hughes Aircraft Co. Report FD62-75, "Final Report on the Feasibility and Design Study for Collective Protection Equipment for the AN/MSG-4 System," 15 March 1962.

5. AiResearch Report No. AAC-4354-R, "Technical Description, 3-Ton Vapor Cycle Air Conditioner and Optional Equipment, General Usage, Personnel and Equipment."

6. Chemical Corps Purchase Description 197-54-675B, 9 April 1962 "Chemical Corps Purchase Description, Filter Unit, Gas-Particulate, EMD, 300 CFM, E46R7."

7. ASHRAE Guide and Data Book, 1963.

DISTRIBUTION LIST, AF19(628)-3275

Activity	No. Copies
USA Elec. Proving Ground (Tech. Library), Fort Huachuca, Ariz.	2
Hq. TAC (DCE), Langley AFB, Va.	1
Hq. ESD (ESST), L. G. Hanscom Field, Bedford, Mass.	1
Hq. ESD (ESRRG), L. G. Hanscom Field, Bedford, Mass.	6
Hq. ESD (ESTI), L. G. Hanscom Field, Bedford, Mass.	22*
Hq. ESD (ESRR), L. G. Hanscom Field, Bedford, Mass.	1
Hq. AFCS (CSXPRT), Scott AFB, Ill.	2
Hq. TAC (DOC), Langley AFB, Va.	2
AFCS (FFAS) Southeast Comm. Region, Robins AFB, Ga.	2
Hq. TAC (DORQ), Langley AFB, Va.	2
Hq. ESD (ESRHA Mr. Begley), L. G. Hanscom Field, Bedford, Mass.	1
TACSO/Major Dow, L. G. Hanscom Field, Bedford, Mass.	1
ATTSC/Major Worthington, L. G. Hanscom Field, Bedford, Mass.	1
AFLC (MCFC) Mr. Deering), L. G. Hanscom Field, Bedford, Mass.	1
Det. 1, 1800 Supp. Sq. (AFCSRO), L. G. Hanscom Field, Bedford, Mass.	2
Hq. USAF (AFSSA-ES-4), Washington 25, D. C.	1
Hq. AFSC (SCSEW), Andrews AFB, Washington, D. C.	2
USARDL (SIGRA/SL-ADT/Tech. Dec. Ctr.) Ft. Monmouth, N. J.	1
USARDL (SIGRA/SL-SUC), Ft. Monmouth, N. J.	1
USN Electronics Lab (Attn: E. Kemp), San Diego, Calif.	1
Hq. USAF (AFMMP), Washington 25, D. C.	1
Hq. USAF (AFOOP), Washington 25, D. C.	2
Hq. USAF (AFORQ/Lt. Col. W. W. Smith), Washington 25, D. C.	1
Dept. of Navy, NATC (NAMEP Sr. Officer, Patuxent River, Md.	1
Hq. AFCS (FFRE), Scott AFB, Ill.	2
TOTAL	60

*Hq. ESD (ESTI) will accomplish distribution of report of DDC.

C3067(75)

482L System Program Office, Electronic Systems Division, L. G. Hanscom Field, Mass., Report No. ESD-TDR-64-230, ANALYSIS AND DESIGN OF CBR PROTECTION FOR THE AN/TSQ-47 SYSTEM. Final Report, July 1964, 125 pages, including illustrations, tables, and 7 references.

Unclassified Report

This document covers tbe analysis and design of CBR protection for AN/TSQ-47 system shelters. Standard CBR protection components were selected based on Category A protection requirements and a shelter system analysis. The E46R7 filter unit, Q-38 protective entrance (sbort), and E31 anti-backdraft valve, each with minor modifications, are the recommended CBR protection components. In addition, a booster blower unit is required in the shelter recirculation system to reduce shelter pressure. Components are sized based on assumed leakage and pressure

1. Chemical, biological, and radiological warfare protection.
2. Shelter systems.
3. Air conditioning equipment.

I. Contract AF19(628)-3275.
II. General Dynamics/ Convair, San Diego, Calif.
III. D. R. Walin
IV. Secondary Report No. GDC-64-026
V. Not in ASTIA collection.

482L System Program Office, Electronic Systems Division, L. G. Hanscom Field, Mass., Report No. ESD-TDR-64-230, ANALYSIS AND DESIGN OF CBR PROTECTION FOR THE AN/TSQ-47 SYSTEM. Final Report, July 1964, 125 pages, including illustrations, tables, and 7 references.

Unclassified Report

This document covers the analysis and design of CBR protection for AN/TSQ-47 system sbelters. Standard CBR protection components were selected based on Category A protection requirements and a shelter system analysis. The E46R7 filter unit, Q-38 protective entrance (short), and E31 anti-backdraft valve, each with minor modifications, are the recommended CBR protection components. In addition, a booster blower unit is required in the shelter recirculation system to reduce shelter pressure. Components are sized based on assumed leakage and pressure

1. Chemical, biological, and radiological warfare protection.
2. Shelter systems.
3. Air conditioning equiment.

I. Contract AF19(628)-3275.
II. General Dynamics/ Convair, San Diego, Calif.
III. D. R. Walin
IV. Secondary Report No. GDC-64-026
V. Not in ASTIA collection.

482L System Program Office, Electronic Systems Division, L. G. Hanscom Field, Mass., Report No. ESD-TDR-64-230, ANALYSIS AND DESIGN OF CBR PROTECTION FOR THE AN/TSQ-47 SYSTEM. Final Report, July 1964, 125 pages, including illustrations, tables, and 7 references.

Unclassified Report

This document covers the analysis and design of CBR protection for AN/TSQ-47 system shelters. Standard CBR protection components were selected based on Category A protection requirements and a shelter system analysis. The E46R7 filter unit, Q-38 protective entrance (short), and E31 anti-backdraft valve, each with minor modifications, are tbe recommended CBR protection components. In addition, a booster blower unit is required in the shelter recirculation system to reduce shelter pressure. Components are sized based on assumed leakage and pressure

1. Cbemical, biological, and radiological warfare protection.
2. Shelter systems.
3. Air conditioning equipment.

I. Contract AF19(628)-3275.
II. General Dynamics/ Convair, San Diego, Calif.
III. D. R. Walin
IV. Secondary Report No. GDC-64-026
V. Not in ASTIA collection.

482L System Program Office, Electronic Systems Division, L. G. Hanscom Field, Mass., Report No. ESD-TDR-64-230, ANALYSIS AND DESIGN OF CBR PROTECTION FOR THE AN/TSQ-47 SYSTEM. Final Report, July 1964, 125 pages, including illustrations, tables, and 7 references.

Unclassified Report

This document covers the analysis and design of CBR protection for AN/TSQ-47 system shelters. Standard CBR protection components were selected based on Category A protection requirements and a shelter system analysis. The E46R7 filter unit, Q-38 protective entrance (short), and E31 anti-backdraft valve, each with minor modifications, are the recommended CBR protection components. In addition, a booster blower unit is required in the shelter recirculation system to reduce sbelter pressure. Components are sized based on assumed leakage and pressure

1. Chemical, biological, and radiological warfare protection.
2. Shelter systems.
3. Air conditioning equipment.

I. Contract AF19(628)-3275.
II. General Dynamics/ Convair, San Diego, Calif.
III. D. R. Walin
IV. Secondary Report No. GDC-64-026
V. Not in ASTIA collection.

drop characteristics. The values assumed are considered to be within 10% of actual values. Tests are defined to verify the assumptions if verification is considered necessary.

drop characteristics. The values assumed are considered to be within 10% of actual values. Tests are defined to verify the assumptions if verification is considered necessary.

drop characteristics. The values assumed are considered to be within 10% of actual values. Tests are defined to verify the assumptions if verification is considered necessary.

drop characteristics. The values assumed are considered to be within 10% of actual values. Tests are defined to verify the assumptions if verification is considered necessary.

482L System Program Office, Electronic Systems Division, L. G. Hanscom Field, Mass., Report No. ESD-TDR-64-230, ANALYSIS AND DESIGN OF CBR PROTECTION FOR THE AN/TSQ-47 SYSTEM. Final Report, July 1964, 125 pages, including illustrations, tables, and 7 references.

Unclassified Report

This document covers the analysis and design of CBR protection for AN/TSQ-47 system shelters. Standard CBR protection components were selected based on Category A protection requirements and a shelter system analysis. The E46R7 filter unit, Q-38 protective entrance (short), and E31 anti-backdraft valve, each with minor modifications, are the recommended CBR protection components. In addition, a booster blower unit is required in the shelter recirculation system to reduce shelter pressure. Components are sized based on assumed leakage and pressure

1. Chemical, biological, and radiological warfare protection.
2. Shelter systems.
3. Air conditioning equipment.

I. Contract AF19(628)-3275.
II. General Dynamics/ Convair, San Diego, Calif.
III. D. R. Walin
IV. Secondary Report No. GDC-64-026
V. Not in ASTIA collection.

482L System Program Office, Electronic Systems Division, L. G. Hanscom Field, Mass., Report No. ESD-TDR-64-230, ANALYSIS AND DESIGN OF CBR PROTECTION FOR THE AN/TSQ-47 SYSTEM. Final Report, July 1964, 125 pages, including illustrations, tables, and 7 references.

Unclassified Report

This document covers the analysis and design of CBR protection for AN/TSQ-47 system shelters. Standard CBR protection components were selected based on Category A protection requirements and a shelter system analysis. The E46R7 filter unit, Q-38 protective entrance (short), and E31 anti-backdraft valve, each with minor modifications, are the recommended CBR protection components. In addition, a booster blower unit is required in the shelter recirculation system to reduce shelter pressure. Components are sized based on assumed leakage and pressure

1. Chemical, biological, and radiological warfare protection.
2. Shelter systems.
3. Air conditioning equipment.

I. Contract AF19(628)-3275.
II. General Dynamics/ Convair, San Diego, Calif.
III. D. R. Walin
IV. Secondary Report No. GDC-64-026
V. Not in ASTIA collection.

482L System Program Office, Electronic Systems Division, L. G. Hanscom Field, Mass., Report No. ESD-TDR-64-230, ANALYSIS AND DESIGN OF CBR PROTECTION FOR THE AN/TSQ-47 SYSTEM. Final Report, July 1964, 125 pages, including illustrations, tables, and 7 references.

Unclassified Report

This document covers the analysis and design of CBR protection for AN/TSQ-47 system shelters. Standard CBR protection components were selected based on Category A protection requirements and a shelter system analysis. The E46R7 filter unit, Q-38 protective entrance (short), and E31 anti-backdraft valve, each with minor modifications, are the recommended CBR protection components. In addition, a booster blower unit is required in the shelter recirculation system to reduce shelter pressure. Components are sized based on assumed leakage and pressure

1. Chemical, biological, and radiological warfare protection.
2. Shelter systems.
3. Air conditioning equipment.

I. Contract AF19(628)-3275.
II. General Dynamics/ Convair, San Diego, Calif.
III. D. R. Walin
IV. Secondary Report No. GDC-64-026
V. Not in ASTIA collection.

482L System Program Office, Electronic Systems Division, L. G. Hanscom Field, Mass., Report No. ESD-TDR-64-230, ANALYSIS AND DESIGN OF CBR PROTECTION FOR THE AN/TSQ-47 SYSTEM. Final Report, July 1964, 125 pages, including illustrations, tables, and 7 references.

Unclassified Report

This document covers the analysis and design of CBR protection for AN/TSQ-47 system shelters. Standard CBR protection components were selected based on Category A protection requirements and a shelter system analysis. The E46R7 filter unit, Q-38 protective entrance (short), and E31 anti-backdraft valve, each with minor modifications, are the recommended CBR protection components. In addition, a booster blower unit is required in the shelter recirculation system to reduce shelter pressure. Components are sized based on assumed leakage and pressure

1. Chemical, biological, and radiological warfare protection.
2. Shelter systems.
3. Air conditioning equipment.

I. Contract AF19(628)-3275.
II. General Dynamics/ Convair, San Diego, Calif.
III. D. R. Walin
IV. Secondary Report No. GDC-64-026
V. Not in ASTIA collection.

drop characteristics. The values assumed are considered to be within 10% of actual values. Tests are defined to verify the assumptions if verification is considered necessary.		drop characteristics. The values assumed are considered to be within 10% of actual values. Tests are defined to verify the assumptions if verification is considered necessary.	
drop characteristics. The values assumed are considered to be within 10% of actual values. Tests are defined to verify the assumptions if verification is considered necessary.		drop characteristics. The values assumed are considered to be within 10% of actual values. Tests are defined to verify the assumptions if verification is considered necessary.	