UNCLASSIFIED

AD NUMBER
AD835942
NEW LIMITATION CHANGE
TO Approved for public release, distribution unlimited
FROM Distribution authorized to U.S. Gov't. agencies only; Administrative/Operational Use; 2 Jul 1968. Other requests shall be referred to Department of Defense, Attn: Public Affairs Office, Washington, DC 20301.
AUTHORITY
Boeing ltr, 15 Apr 1977

THIS PAGE IS UNCLASSIFIED

DDC (2)

AD835942

BOEING

AD No.
DDC FILE COPY

STATEMENT #3 UNCLASSIFIED

Each transmittal of this document outside the agencies of the U.S. Government must have prior approval of ~~Boeing Company~~ Seattle, Washington.

DDC
RECEIVED
JUL 25 1968
C

SEATTLE, WASHINGTON

DISCLAIMER NOTICE

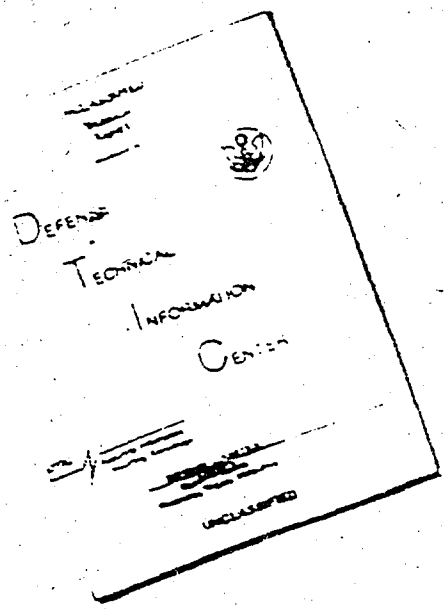

THIS DOCUMENT IS BEST QUALITY AVAILABLE. THE COPY FURNISHED TO DTIC CONTAINED A SIGNIFICANT NUMBER OF PAGES WHICH DO NOT REPRODUCE LEGIBLY.

REPRODUCED FROM
BEST AVAILABLE COPY

THE BOEING COMPANY

CODE IDENT. NO. 81205

NUMBER (14) D2-125911-1

(6)

TITLE: A COMPENDIUM OF STRUCTURAL JOINTS FOR ASSEMBLY, FIELD AND FLIGHT SEPARATION ON MISSILES,

ORIGINAL RELEASE DATE_____. FOR THE RELEASE DATE OF SUBSEQUENT REVISIONS, SEE THE REVISIONS SHEET. FOR LIMITATIONS IMPOSED ON THE DISTRIBUTION AND USE OF INFORMATION CONTAINED IN THIS DOCUMENT, SEE THE LIMITATIONS SHEET.

MODEL _____ CONTRACT _____

ISSUE NO. _____ ISSUED TO: _____

OFFICIAL RELEASE DATE

(11) 2 Jul 68

ISSUING ORGANIZATION: DEVELOPMENT DESIGN, 2-5166

PREPARED BY [signature] 7/2/68
(10) R. V. Gambrell

SUPERVISED BY [signature]
W. R. S. Clark

APPROVED BY [signature] 7/5/68
J. S. Concannon

APPROVED BY _____

(12) 168p.

SHEET i

059 600

elk

This package represents the culmination of the six months effort on the joint study. While some portions are incomplete, release was made at this time to make the material assembled, available in advance of document completion. Future effort will include additional joints called for on Pages 3 & 9 and expansion of the material as described in Section 8.0.

USE FOR TYPEWRITTEN MATERIAL ONLY

U3 4802 1434 REV. 8-65

ABSTRACT

This report ~~is a Class II Research document which~~ contains information to assist the preliminary and conceptual design engineer in selecting and designing a variety of missile joints, including:

Payload Stage Assembly and Separation Joints,

Booster Stage Assembly and Separation Joints,

Missile Carrier Interface Joints.

In addition, information on design considerations and system requirements are included to assist the engineer in making this concept choice and justifying its applicability and feasibility.

KEY WORDS

Missile Joints
Primary Structure
Booster Staging
Assembly
Joint Seals
Model Vehicles
AGM
Shim Joints
Payload Separation
Ascent Cover
Ordnance
Motor Case
Fiberglass
Minuteman
Saturn

CONTRIBUTORS

W. Fukuyama
W. Hoke
R. Thompson
W. Gouge
W. F. Martin
R. L. Gross
R. V. Gambrell
J. T. Barnaugh

US 4802 1434 REV. 8-65

USE FOR TYPEWRITTEN MATERIAL ONLY

LIMITATIONS

Initial Release. Document to be distributed to the Defense Documentation Center (DDC). Each transmittal of this document outside the agencies of the U. S. Government must have prior approval of The Boeing Company.

This document is controlled by Development Design, Org. 2-5166

All revisions to this document shall be approved by the above noted organization prior to release.

TABLE OF CONTENTS

PARAGRAPH	PAGE
TITLE PAGE	i
ABSTRACT AND KEY WORDS	ii
LIMITATIONS	iii
TABLE OF CONTENTS	iv
1.0 INTRODUCTION	1
2.0 PAYLOAD STAGE JOINTS	2
2.1 ASSEMBLY JOINTS	2
2.1.1 PAYLOAD	2
2.1.2 ASCENT COVER	4
2.2 SEPARATION JOINTS	5
2.2.1 PAYLOAD	5
2.2.2 ASCENT COVER	6
3.0 BOOSTER STAGE JOINTS	8
3.1 ASSEMBLY JOINTS	8
3.1.1 INTERSTAGE OR BOOSTER ADAPTERS	8
3.1.2 MID-BODY OR MID-INTERSTAGE RINGS	15
3.2 SEPARATION JOINTS	19
3.2.1 STAGING RINGS	19
3.2.2 LONGITUDINAL JOINTS	24
4.0 SMALL MISSILE JOINTS	27
4.1 AGM-69A JOINT DESIGN	27
4.2 SELECTED SMALL MISSILE JOINTS	40
4.3 THE JOINT SELECTION PROCESS	51
4.4 A CONCEPTUAL MISSILE JOINT	54

USE FOR TYPEWRITTEN MATERIAL ONLY

U3 4802 1434 REV. 8-65

PARAGRAPH		PAGE
5.0	DESIGN CONSIDERATIONS	59
5.1	ORDNANCE SEPARATION	
5.1.1	TYPICAL ORDNANCE TRAIN	59
5.1.2	TYPICAL ORDNANCE COMPONENTS	63
5.2	JOINT TRADES EXERCISE	85
5.3	SEALING POINTS	92
6.0	JOINT DESIGN FOR LARGE SEGMENTED, FILAMENT WOUND MOTORCASES	94
6.1	MOTORCASE CONCEPTS CONSIDERED	94
6.2	RECENT STATE OF THE ART DEVELOPMENTS IN THE SHIM JOINT CONCEPT	103
7.0	JOINT CONSIDERATIONS FOR REDUCED SCALE MODEL VEHICLES	134
8.0	DOCUMENT OPTION FOR FUTURE WORK	145

USE FOR TYPEWRITTEN MATERIAL ONLY

U3 4802 1434 REV. 8-65

1.0 INTRODUCTION

This document was prepared to compile an abbreviated [illegible] design information useful to the preliminary or conceptual design [illegible] The intent is not to present methods with which an engineer can design structural interface joints on missiles, but to assemble in one document, a cross-section of state-of-the-art designs.

It is recognized that a design engineer can arrive at a feasible design of a missile joint with no assistance. However, this takes a certain amount of time depending on the type of joint and its use. The engineer must investigate the loads, environment, cost, etc., or else he must initiate a literature search to see what similar joint has been used successfully in the past. With this document a designer will be able to select a feasible, proven joint design using only gross loads and environment data. This is usually sufficient for preliminary or conceptual design work since loads and environment data are usually estimates at this stage.

The format of the document has been prepared to facilitate this task as much as possible. For each joint a sketch is given with dimensions if possible, the loads to which the joint is designed and the environment to which the joint will be subjected are summarized. Also, a short written description and project use is provided to give information on what type of use the joint might be applicable. Finally references are stated, if available, which will allow the designer to search for additional detail material.

Comparative data are provided in the tables of Appendix I for joints intended as alternatives for a particular application.

USE FOR TYPEWRITTEN MATERIAL ONLY

2.0 PAYLOAD STAGE JOINTS

This section covers the variety of structural joints designed to (1) attach the payload to the booster, (2) separate the payload from its booster, (3) attach the payload's ascent cover to the payload or booster and (4) separate the ascent cover in flight.

Figure 2-1 schematically shows the typical location of the four types of joints on a payload stage. It should be referred to as a guide to a specific type of joint. It is not intended that a given application require all of the indicated joints or that they be located as shown. For example, certain ascent covers have "over-the-top" removal and hence have no longitudinal separation joint. Or, separation and assembly joints may be integrated into one structural joint. For clarity, all joints are shown here as separate items for reference on Figure 2-1.

2.1 ASSEMBLY JOINTS

These joints serve to provide field attachment of the payload to the booster or the ascent cover to the booster. The joint may or may not be integral with the separation joint. If it is, a cross reference to that particular joint in Section 2.2 is made.

2.1.1 PAYLOAD ASSEMBLY JOINTS

These joints are shown on Figure 2-1 to be located on a "payload adapter," depicted as a frustrum of a cone. This is typical of satellite payloads on space boosters and is generally applicable to cases where the payload has a different diameter than the booster. Where diameters are nominally the same, the payload may be attached directly to the booster and this joint may be quite similar in appearance to booster interstage joints. Both types are shown in this section.

USE FOR DRAWING AND HANDPRINTING — NO TYPEWRITTEN MATERIAL

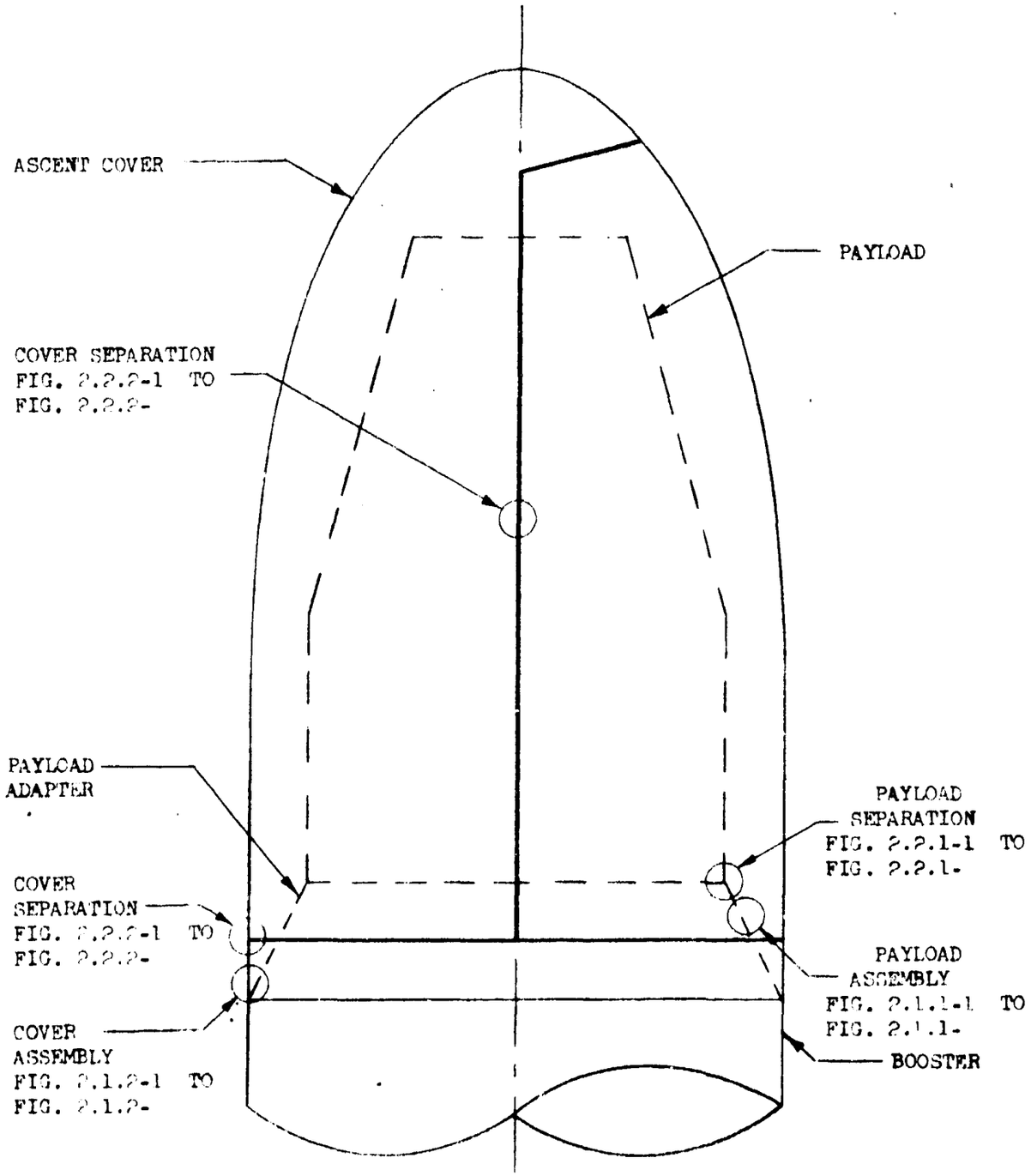

PAYLOAD STAGE JOINT INDEX

FIGURE 2-1

[illegible] ASCENT COVER ASSEMBLY JOINTS

Figure 2-1 locates these joints at the intersection of the booster and payload adapter. Another common location is direct attachment to the payload shell. Others will become apparent as the engineer encounters different applications. The conditions of interest are how much of the payload [illegible] to expand or contract at different phases of the mission, how much protection can be required by dual purpose structure (integrating the ascent cover as part of the payload primary structure), and the desire to discard [illegible] weight as early in the mission as possible. Joints applicable to many situations are covered in this section.

2.2 SEPARATION JOINTS

The separation joints described in this section provide inflight release of the payload or the ascent cover from the missile. The joints may be part of integral joints combining the function of assembly and release, in which case a cross reference to ASSEMBLY JOINTS, Section 2.1 will normally be made.

2.2.1 PAYLOAD SEPARATION JOINTS

These joints are commonly located as shown in Figure 2-1 or at the booster interface. Both types will be shown here. In some cases, additional mechanisms (springs, ordnance thrusters, etc.) are used for separation impulse. These will not be discussed in this document and mention will be made only when necessary to show clearance or functional association with the joint.

2.2.2 ASCENT COVER SEPARATION JOINTS

Two types of joints are indicated in Figure 2-1, the circumferential and the longitudinal joint. The longitudinal joint is not always used, depending on the mode of ascent cover deployment. Both types of device are shown in this section. Comments of section 2.2.1, PAYLOAD SEPARATION JOINTS, also apply here.

2.2.2.1 NOSE CONE SEPARATION JOINT (FIG. 2.2.2-1)

This detail is of a joint used to separate the nose cone of the HIBEX missile and thereby provide a high drag blunt nose exposure to the air stream.

The joint is an uncomplicated design similar in many respects to a fabrication joint - two skins are butted together and bolted using bolts and nut plates. The separation is done with a linear shaped charge which expends its energy primarily in one direction, in this case outward, to cut the nose cone skin. This impulse is sufficient to make the physical break but not to effect total separation. To do this, a gas generator and thruster is used to "blow" the two pieces apart.

For additional details of the ordnance used, refer to section 5.1.

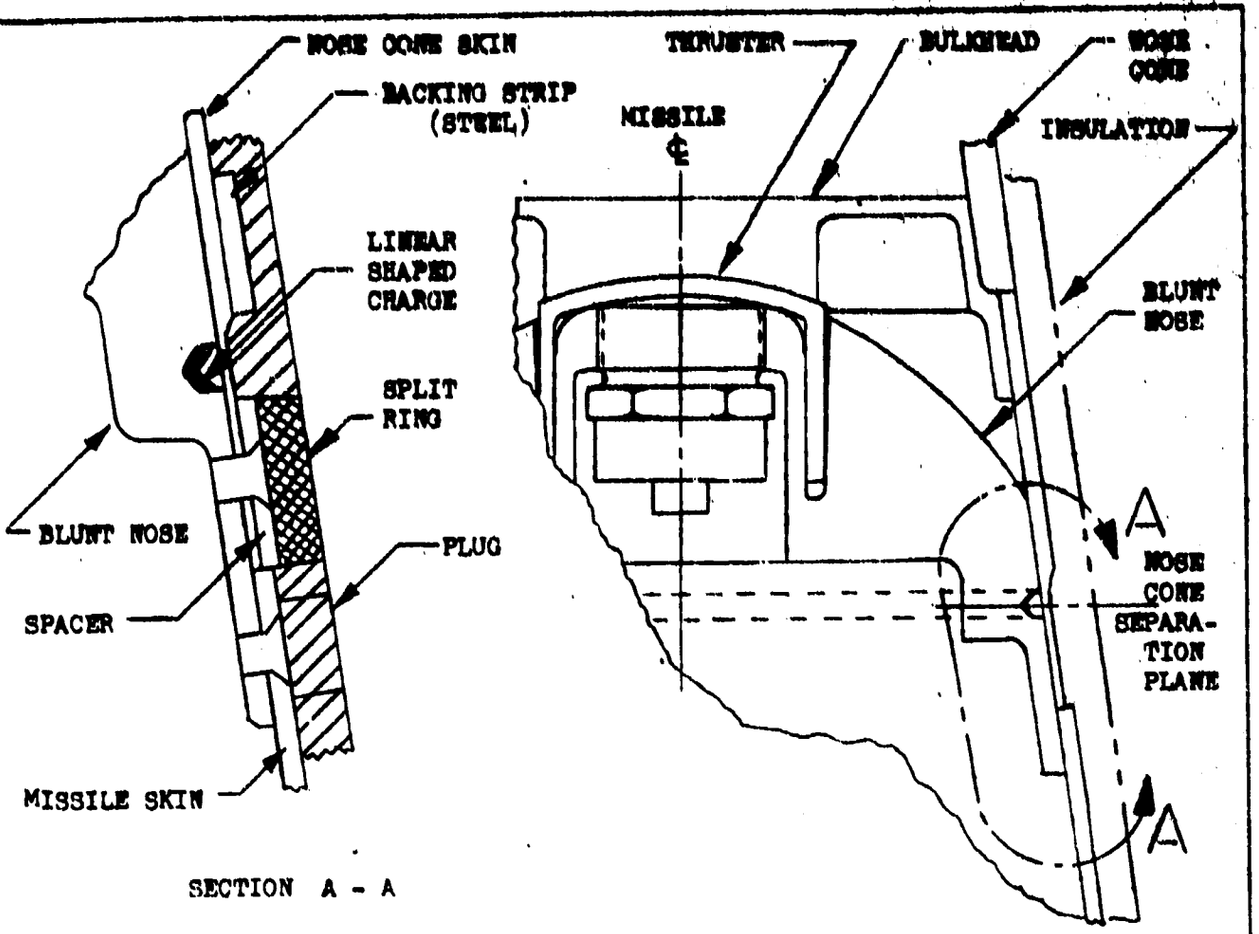

CORK

RUBBER

NOSE CONE SEPARATION JOINT

SCALE NONE

DESIGN LOAD - -

AVERAGE DIAMETER - OD ID

CROSS SECT. AREA - N.A.

MATERIAL - ALUMINUM

FIGURE 2.2.2-1

REFERENCES: HIBEX PROGRAM DWG: 25-39910

USE FOR DRAWING AND HANDPRINTING — NO TYPEWRITTEN MATERIAL

3.0 BOOSTER STAGE JOINTS

This section includes the variety of structural joints designed to (1) enable the assembly and disassembly of missile segments for purposes of manufacture, transportation and maintenance in the field and (2) enable the staging separation necessary for the missile's mission flight profile.

Figure 3-1 schematically shows the typical location of the joints on a missile booster segment and interstage. This is representative of any stage. It is not intended that a given application require all of the indicated joints or that they be located as shown. As an example, an inflight separation function and a field joint may be integrated into a single structural joint. For clarity, all joints are indicated as separate items on Figure 3-1.

3.1 ASSEMBLY JOINTS

The assembly joints described in this section are those used to connect segments of the booster to each other, through interstages or not. This connection might be purely a shop fabrication assembly or it might be a field operation done many times. The joints may be integral joints as in payload stages. If so, cross referencing is done.

3.1.1 INTERSTAGE OR BOOSTER ADAPTERS

This section covers the assembly joints made between one booster stage and another, usually through an interstage. The joints are usually referred to as "adapter rings" and commonly form the interface between two manufacturers. These rings may be purely assembly or may be integrated with a separation joint if the location is one where staging is desirable. Both types are covered here.

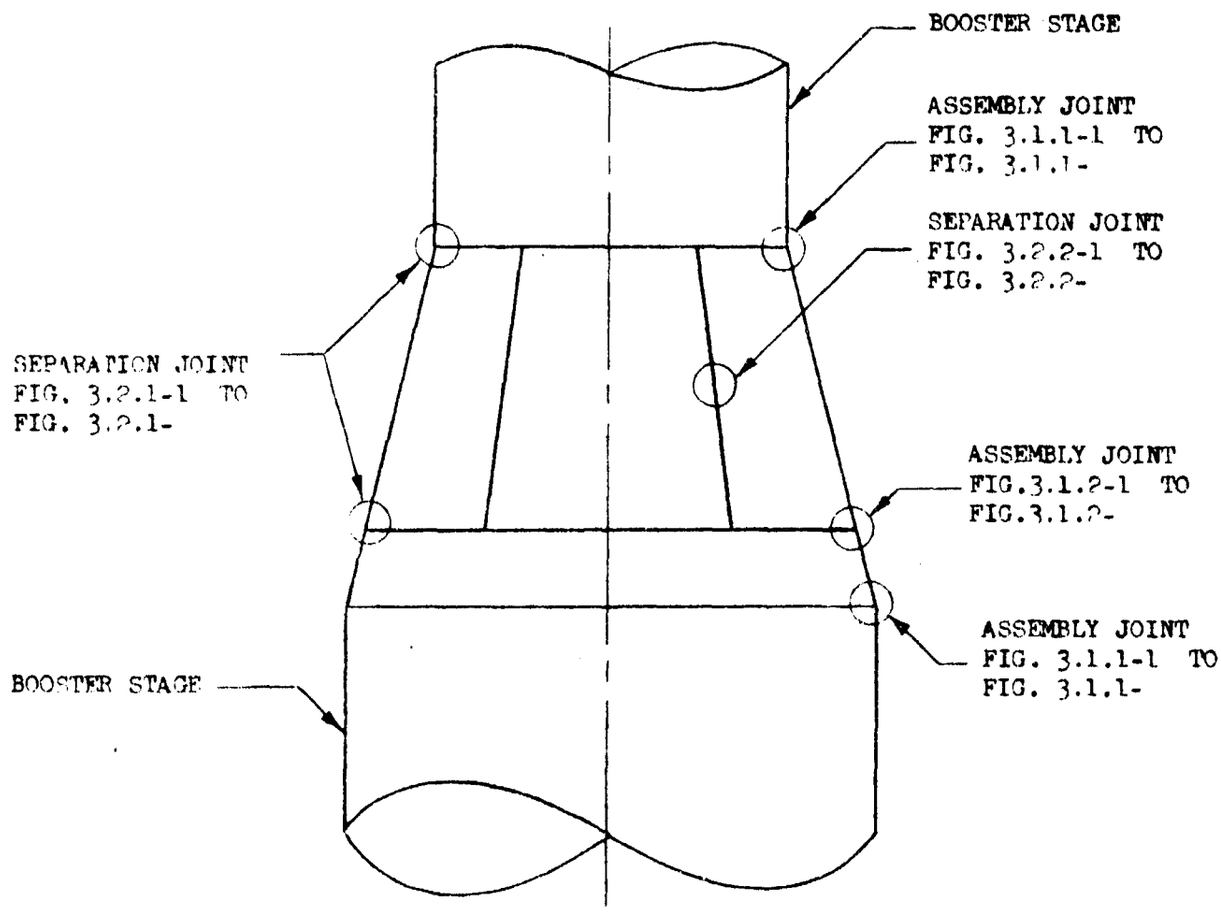

BOOSTER STAGE JOINT INDEX

FIGURE 3-1

USE FOR DRAWING AND HANDPRINTING — NO TYPEWRITTEN MATERIAL

3.1.1.1 Interstage Adapter Assembly Joint (Fig. 3.1.1-1)

This joint detail is a section through a circumferential joint used on the Minuteman missile. The dimensions given are typical of the Stage 1 - Stage 2 interstage as are the diameter and cross section area. The ring's characteristic shape is also typical of the Stage 2 - Stage 3 interstage on Minuteman. For reference, the numbers in parenthesis pertain to that ring.

The ring is a dual purpose joint. It permits both field assembly and fabrication assembly in the shop. It also functions as an inflight separation joint (Ref. Section 3.2.1.1).

Two bolt circles are provided in the joint, both to be used with bolt-nut plate combinations. The lower bolts are primarily fabrication fasteners and are backed with standard nutplates. The upper bolts are for field assembly and disassembly and are backed with floating nutplates. Cork plugs are commonly used to replace insulation removed during disassembly.

Structurally, the main ordnance carrying ring is not the primary load carrying member. Compression loads are reacted by a butting together of the interstage skins, tension loads by the tension tie. The joint is designed to react all boost flight loads as well as silo overpressure.

3.1.1.2 Interstage Adapter Assembly Joint (Fig. 3.1.1-2)

This joint is designed for assembly of an interstage (or other structure such as a test module) on top of a booster stage. The assembly operation may be done in the manufacturing facility or the field. The ring is typical of that used on the Minuteman program to join the Autonetics Guidance and Control module to the third booster stage.

The ring itself is riveted to the interstage structure and forms an integral component. The assembly operation is done then by means of the bolts and nutplates shown. Nuts may be used instead of nutplates, depending on the accessibility and "dropped-nut" considerations. Cork plugs are commonly used to replace any insulation removed during disassembly.

The joint is designed to retain its structural integrity throughout boost flight loads and silo overpressures.

3.1.1.3 STAGE TO STAGE ASSEMBLY JOINT (FIG. 3.1.1-3)

This detail is a section through a circumferential joint used on the HiBEX Missile. It is used to assemble the upper stage instrumentation package to the booster. The assembly operation could take place either in the fabrication facility or a munitions field facility.

The ring is riveted to the lower missile stage, which is made of fiberglass in this application. The upper stage is attached with bolt-nutplate combinations. The joint is designed to resist extremely high boost acceleration loads.

USE FOR TYPEWRITTEN MATTER ONLY

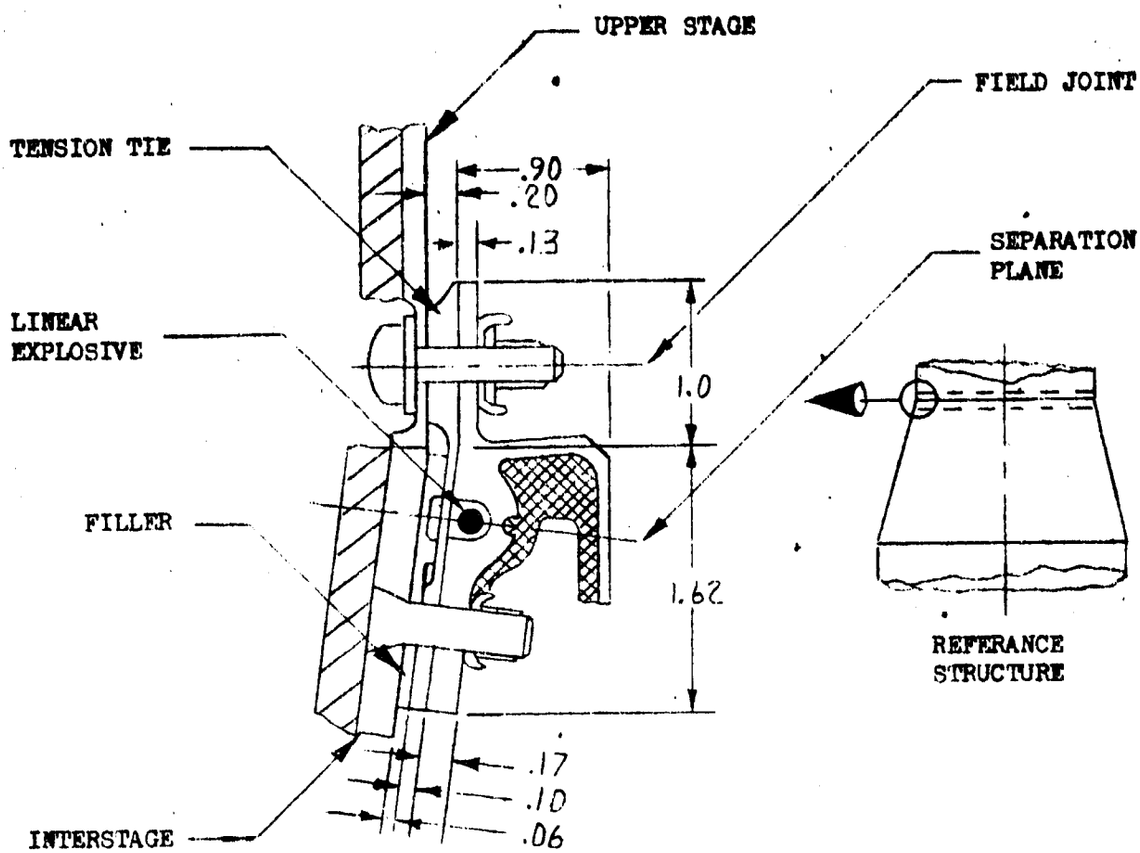

INTERSTAGE ADAPTER ASSEMBLY JOINT

CORK

PR-1910

SCALE FULL

DESIGN LOAD - (CRITICAL) 913 #/IN TENSION LOAD (BEARING)

AVERAGE DIAMETER - 53.0 IN. OD IN ID; (36.7 IN. OD), IN ID.

CROSS SECT. AREA - 1.003 SQ. IN. (1.156 SQ. IN.)

MATERIAL - 2024 AL.

FIGURE 3.1.1-1

REFERENCES: MINUTEMAN ENGINEERING DWG 25-37645
25-37647

PARA. 3.2.1-1

USE FOR DRAWING AND HANDPRINTING — NO TYPEWRITTEN MATERIAL

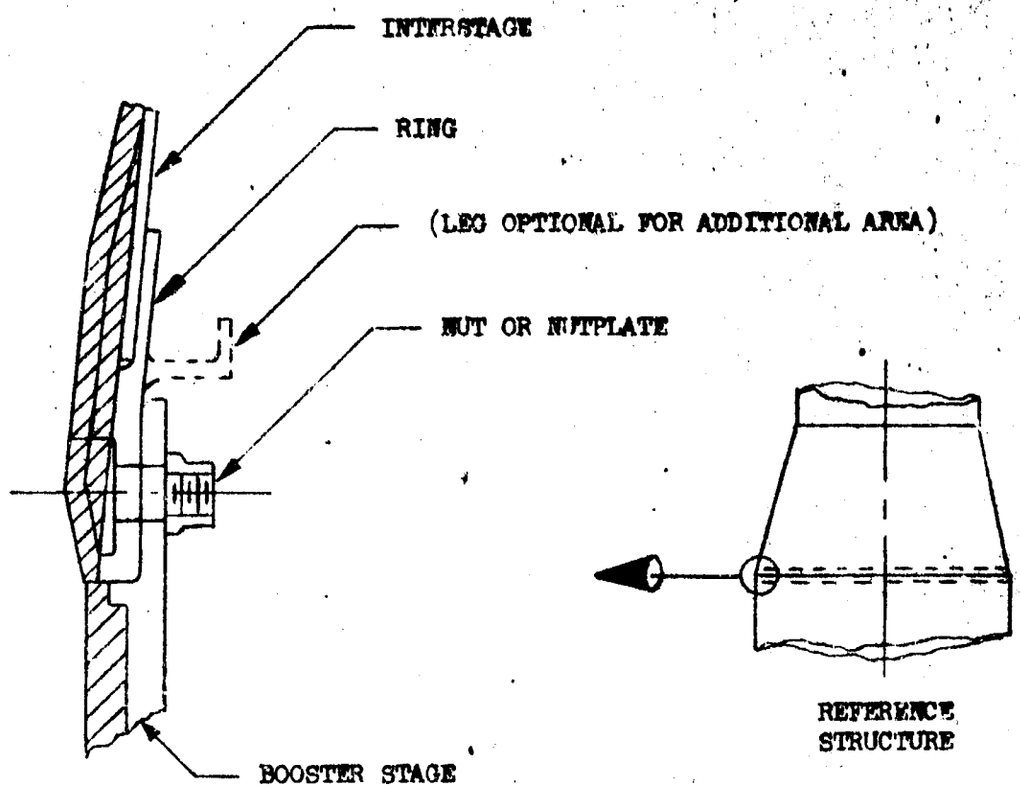

INTERSTAGE ADAPTER
ASSEMBLY JOINT

CORK

DESIGN LOAD - 387 #/IN. TENSION (RING BUCKLING CRITICAL)

AVERAGE DIAMETER - 65.[illegible] IN. OD (APPROXIMATE), ID (APPROXIMATE)

CROSS SECT. AREA - UNKNOWN

MATERIAL - ALUMINUM

FIGURE 3.1.1-2

REFERENCES: MINUTEMAN INTERFACE CONTROL DRAWING 25-37045
25-37047

USE PENCIL, DRAWING AND HANDPRINTING — NO TYPEWRITTEN MATERIAL

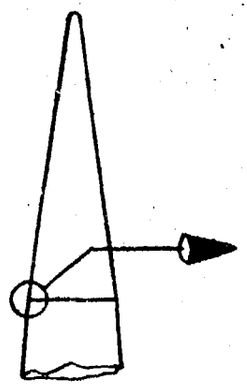

REFERANCE
STRUCTURE

STAGE TO STAGE
ASSEMBLY JOINT

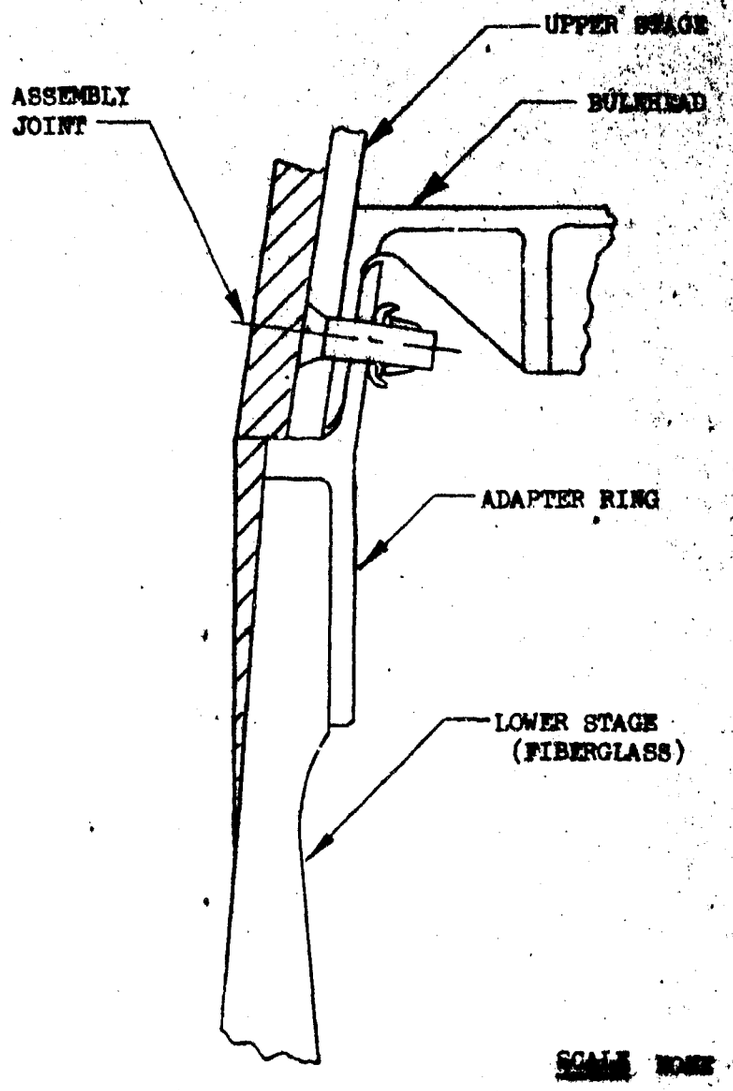

CORK

SCALE NONE

DESIGN LOAD -

AVERAGE DIAMETER - OD, ID

CROSS SECT. AREA -

MATERIAL - ALUMINUM

FIGURE 3.1.1-3

REFERENCES: HIBEX PROGRAM DWG 25-39910

FIGURE 3.2.1-4

DRAWING AND HANDPRINTING — NO TYPEWRITTEN MATERIAL

3.1.2 MIDBODY OR MID-INTERSTAGE RINGS

These joints are almost entirely used integrally with a staging separation joint. Their purpose is to assemble the staged segments, usually in a fabrication environment.

3.1.2.1 Interstage Assembly Joint (Fig. 3.1.2-1)

This joint detail is a section through a circumferential joint used on the Minuteman missile. The dimensions given are typical of the Stage 1 - Stage 2 interstage.

The ring is a dual purpose joint. It permits both field assembly and fabrication assembly in the shop. It also functions as an inflight staging joint (Ref. Section 3.2.1.2).

Two bolt circles are provided in the joint, both to be used with bolt-nut plate combinations. The lower bolts are primarily fabrication fasteners and are backed with standard nuts. The upper bolts are also fabrication assembly fasteners but are backed with floating nutplates.

Structurally, the main ordnance carrying ring is not the primary load carrying member. Compression loads are reacted by a butting together of the interstage skins, tension loads by the tension tie. The joint is designed to react all boost flight loads as well as silo overpressures.

3.1.2.2 Interstage Assembly Joint (Fig. 3.1.2-2)

This joint detail is a section through a circumferential joint used on the Minuteman missile. The dimensions given are typical of the Stage 2 - Stage 3 interstage.

The ring is a dual purpose joint. It permits both field assembly and fabrication assembly in the shop. It also functions as an inflight stacking joint (Ref. Section 5.1.5).

Two bolt rows are provided in the joint, both to be used with bolt-nutplate combinations. The lower bolts are primarily fabrication fasteners and are packed with standard nuts. The upper bolts are also fabrication assembly fasteners but are packed with floating nutplates.

Structurally, the main pressure carrying ring is not the primary load carrying member. Compression loads are reacted by a butting together of the interstage skins, tension loads by the tension tie. The joint is designed to react all ground flight loads as well as ultimate overpressures.

FORM 434 REV. 8-65

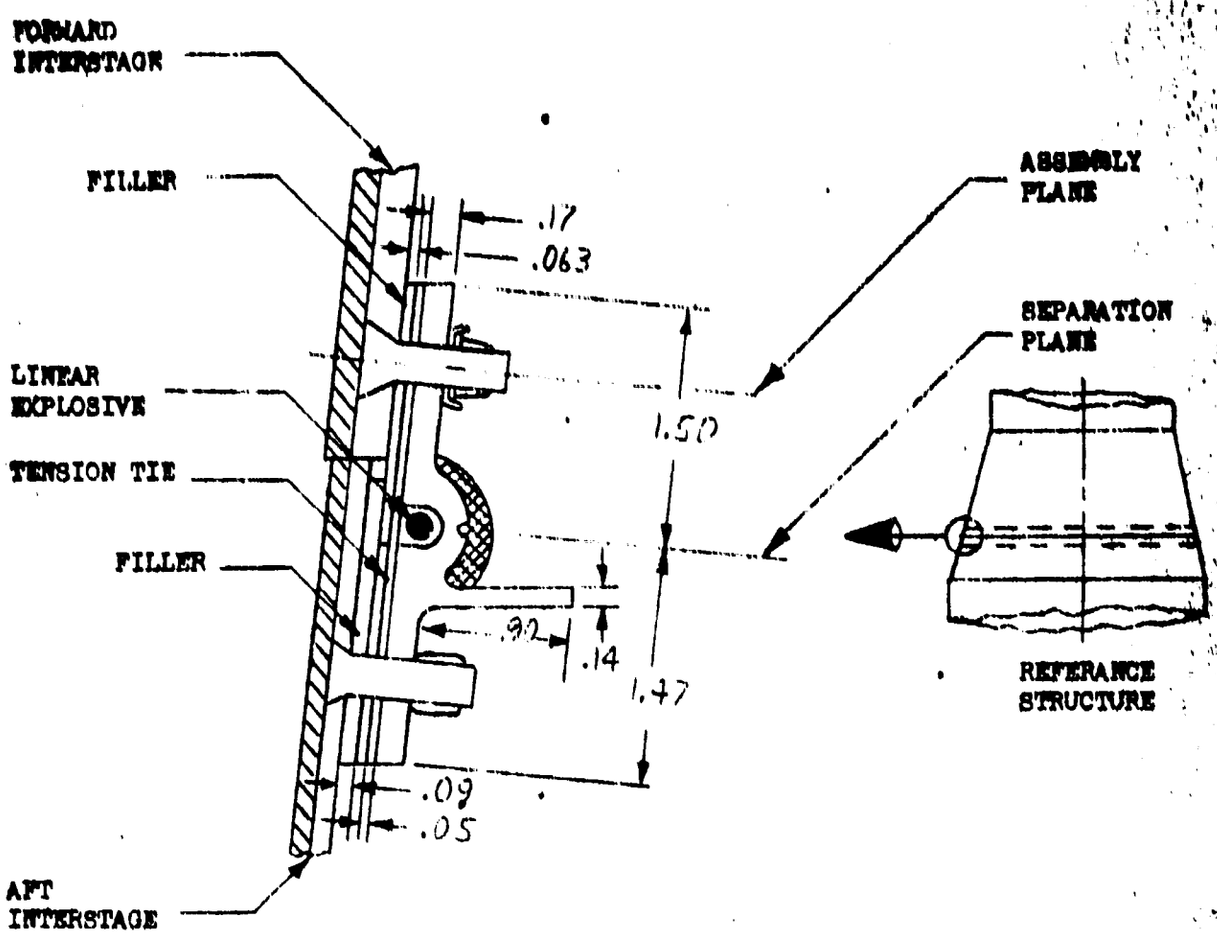

CORK

PR-1910

INTERSTAGE ASSEMBLY JOINT

SCALE FULL

CRITICAL DESIGN LOADS - 1200 #/IN TENSION, 1200 #/IN. BEARING

AVERAGE DIAMETER - 62.0 IN. OD, IN.ID

CROSS SECT. AREA - 1.165 SQ. IN.

MATERIAL - 2024 AL.

FIGURE 3.1.2-1

REFERENCES: MINUTEMAN ENGINEERING DWG: 25-37645
25-37647

PARA. 3.2.1.2

USE THIS DRAWING AND HANDPRINTING — NO TYPEWRITTEN MATERIAL

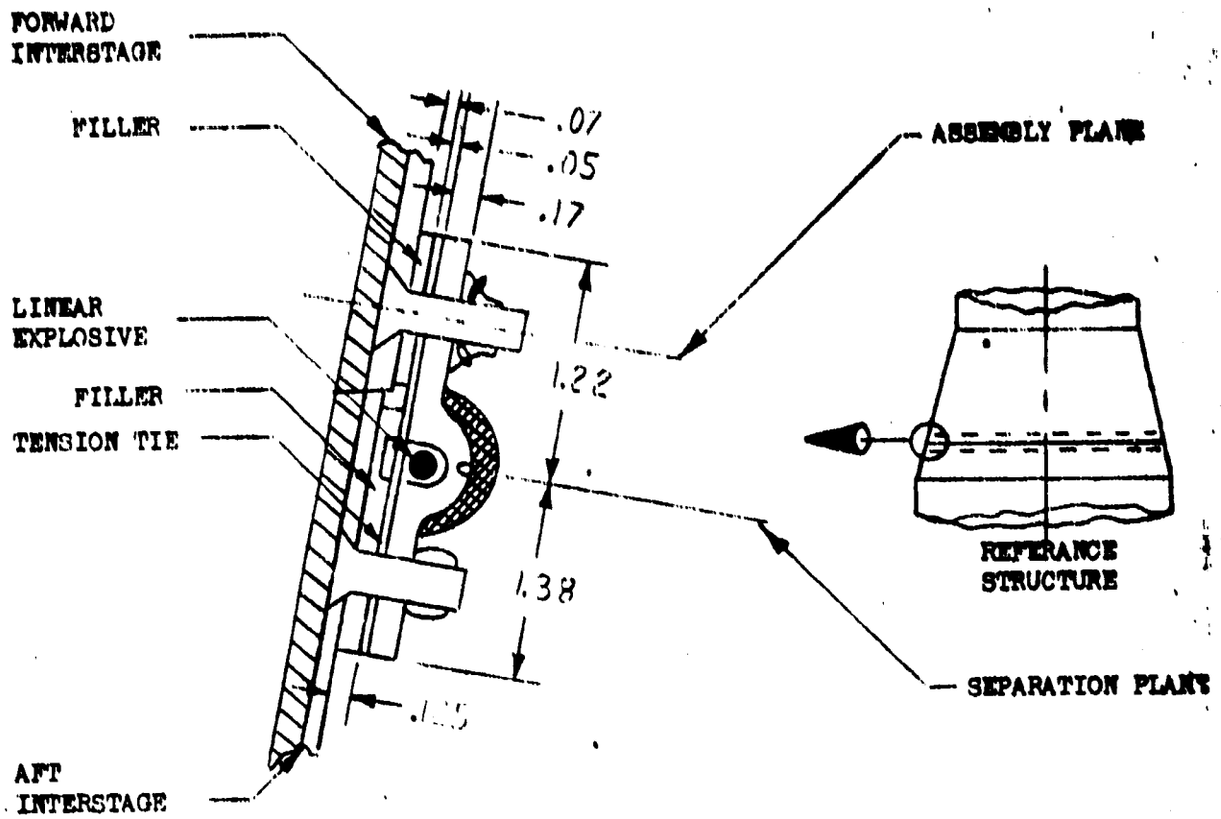

CORK

PR-1910

INTERSTAGE ASSEMBLY JOINT

SCALE FULL

DESIGN LOAD - 1000#/in. TENSION, SHEAR

AVERAGE DIAMETER - 46.0 IN. OD, IN. ID.

CROSS SECT. AREA - .910 SQ. IN.

MATERIAL - 2024 AL.

FIGURE 3.1.2-2

REFERENCES: MINUTEMAN ENGINEERING DWG: 25-37645
25-37647

PARA 3.2.1.3

USE FOR DRAWING AND HANDPRINTING — NO TYPEWRITTEN MATERIAL

3.2 SEPARATION JOINTS

Described in this section are the variety of joints designed to provide inflight staging of a missile booster. This is the mechanism which separates a burned out motor from the remaining "live" booster stages. It also may separate an interstage structure from an associated motor case. As in most of the other joints described in this document, these joints may be part of integral joints combining other functions. When this is the case, cross referencing to appropriate sections will be made.

3.2.1 STAGING RINGS

These rings function to either "stage" an expended booster segment from an unexpended one or to separate an interstage from a booster. Figure 3-1 shows typical locations for this type of joint. In some instances they are used in conjunction with longitudinal joints to separate and segment an interstage. This is covered in more detail in Section 3.2.2.

3.2.1.1 Interstage Adapter Booster Skirt Removal Joint (Fig. 3.2.1-1)

This joint detail is a section through a circumferential joint used on the Minuteman missile. The dimensions given are typical of the Stage 1 - Stage 2 interstage as are the diameter and cross section area. The ring's characteristic shape is also quite typical of the Stage 2 - Stage 3 interstage on Minuteman. For reference, the numbers in parenthesis pertain to that ring.

The ring is a dual purpose joint. It provides the inflight interstage skirt removal function, working in conjunction with the longitudinal joint described in Section 3.2.2.1. It also functions as a field assembly joint (Ref. Section 3.1.1.1).

The separation impulse to provide the required function comes from a linear explosive charge. The ring is designed to contain any particle fragmentation from this charge. This function is enhanced by the use of a rubber-like material, PR-1910 (BMS 5-62) which can contain small fragments. The primary function of the material however is to absorb much of the shock of the explosion.

Structurally, the main ordnance carrying ring is not the primary load carrying member. Compression loads are reacted by a butting together of the stage skins, tension loads by the tension tie. The joint is designed to react all boost flight loads as well as silo overpressures.

For additional details on the ordnance used in this joint, refer to Section 5.1.

3.2.1.2 Booster Staging Joint (Fig. 3.1.2-1)

This joint detail is a section through a circumferential joint used on the Minuteman missile. The dimensions given are typical of the Stage 1 - Stage 2 interstage.

The ring is a dual purpose joint. It provides the inflight booster staging function, separating the upper stage from the expended stage. It also functions as an assembly joint (Ref. 3.1.2.1).

The separation impulse to provide the required function comes from a linear explosive charge. The ring is designed to contain any particle fragmentation from this charge by the use of a rubber-like material, PR-1910 (BMS 5-62) which can contain small fragments. The primary function of the material however is to absorbe much of the shock of the explosion.

Structurally, the main ordnance carrying ring is not the primary load carrying member. Compression loads are reacted by a butting together of the stage skins, tension loads by the tension tie. The joint is designed to react all boost flight loads as well as silo overpressures.

For additional details on the ordnance used in this joint, refer to Section 5.1.

3.2.1.3 Booster Staging Joint (Fig. 3.1.2-6)

This joint detail is a section through a circumferential joint used on the Minuteman missile. The dimensions given are typical of the Stage 2 - Stage 3 interstage.

The ring is a dual purpose joint. It provides the inflight booster staging function, separating the upper stage from the expended stage. It also functions as an assembly joint (Ref. 3.1.2.2).

The separation impulse to provide the required function comes from a linear explosive charge. The ring is designed to contain any partical fragmentation from this charge by the use of a rubber-like material, PR-1910 (BMS 5-62) which can contain small fragments. The primary function of the material however is to absorb much of the shock of the explosion.

Structurally, the main ordnance carrying ring is not the primary load carrying member. Compression loads are reacted by a butting together of the stage skins, tension loads by the tension tie. The joint is designed to react all boost flight loads as well as silo overpressures.

For additional details on the ordnance used in this joint, refer to Section 5.1.

USE FOR TYPEWRITTEN MATERIAL ONLY

U3 4R07 1124 R F1, 8-65

3.2.1.4 BOOSTER SEPARATION JOINT (FIG. 3.2.1-4)

This detail is a section through a circumferential joint used on the HiBEX Missile. It functions to separate the lower (booster) stage from the upper (instrumentation package) stage during flight.

The joint primarily consists of a circumferential retainer ring bolted to the inside of the fiberglass skirt. The ring contains a linear shaped charge designed to direct its energy in an outward direction and thereby sever the fiberglass skirt circumferentially. The retainer ring is not designed to react any loads. It is massive enough however to absorb shock from the explosive charge.

For additional details on the ordnance used in this joint, refer to Section 5.1.2.

USE FOR TYPEWRITTEN MATERIAL ONLY

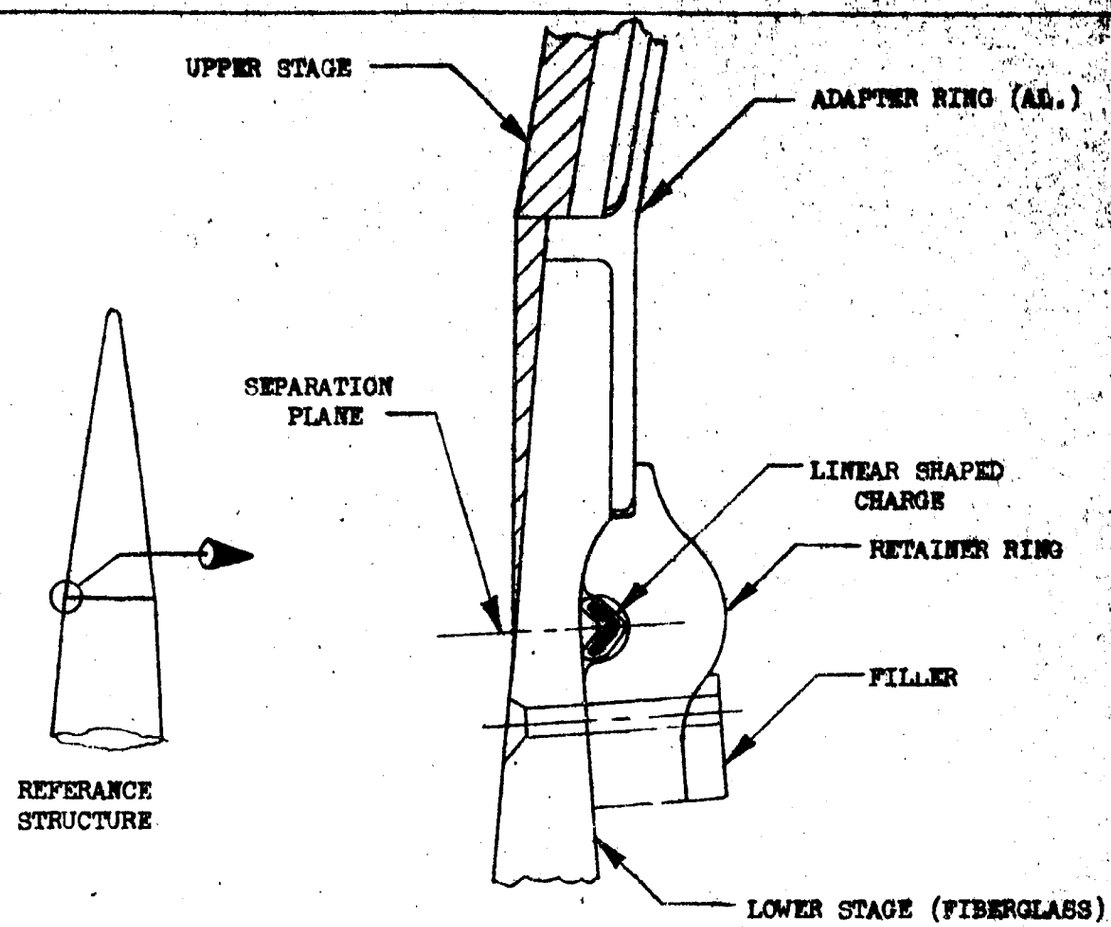

BOOSTER SEPARATION JOINT

CORK

SCALE NONE

DESIGN LOAD -

AVERAGE DIAMETER - IN. OD, IN. ID

CROSS SECT. AREA -

MATERIAL - FIBERGLASS

FIGURE 3.2.1-4

REFERENCES: HIBEX PROGRAM DWG 25-39910

FIGURE 3.1.1-3

USE FOR DRAWING AND HANDPRINTING — NO TYPEWRITTEN MATERIAL

3.2.2 LONGITUDINAL JOINTS

These joints are used to separate an interstage or other missile segment into a number of sections for removal from the booster in flight. They are longitudinal rather than circumferential and usually function with a circumferential joint (Ref. Fig. 3-1 and Section 3.2.1).

No distinction is made in this section between separation and assembly joints. These joints have one primary function which is separation. They must be assembled, of course, but this is differentiated from the assembly joints discussed elsewhere since they are used to assemble missile sections, not joints.

3.2.2.1 Interstage Longitudinal Joint (Fig. 3.2.2-1)

This joint is typical of those used on the Minuteman missile to split both the Stage 1 - Stage 2 and the Stage 2 and Stage 3 interstage. It is used in conjunction with the circumferential separation joint discussed in Section 3.2.1.1. The dimensions given are the same as both interstages, the only difference being the joint length. Numbers in parenthesis pertain to the Stage 2 and Stage 3 interstage.

The joint works simultaneously with the skirt removal joint which separates the skirt from the upper booster stage. At the same time, the skirt is split into four sections, effecting both the axial removal from the path of flight, and the radial removal for clearance. The separation impulse providing this function comes from a linear explosive charge. The ring is designed to contain any particle fragmentation with the rubber-like material, PP-1910 (BMS 5-62).

USE FOR TYPEWRITTEN MATERIAL ONLY
U2 4802 1434 REV. 8-55

The ring is designed to retain all structural integrity throughout flight loads and silo overpressures.

For additional details on the ordnance used in this joint, refer to Section 5.1.

U 3 4800 1434 REV. B-FR

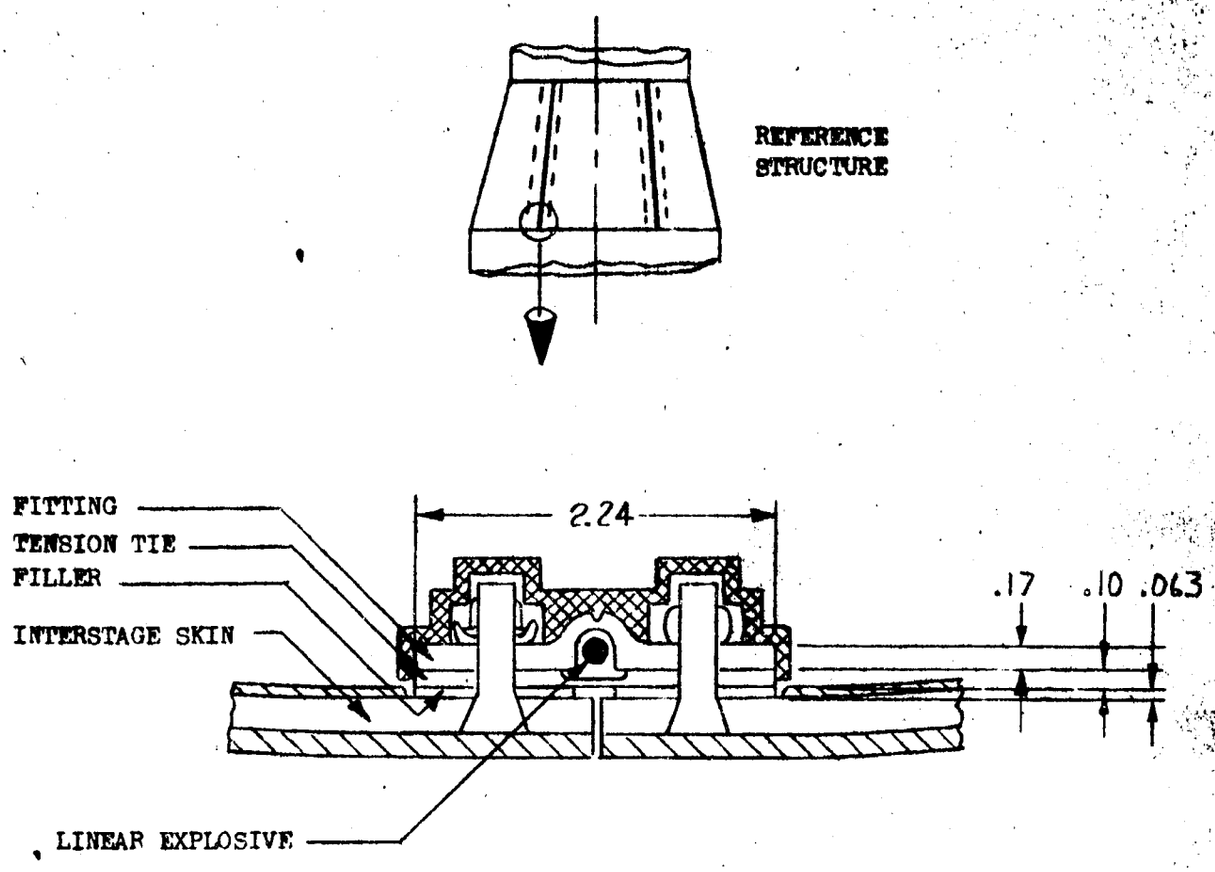

CORK

PR-1910

INTERSTAGE LONGITUDINAL JOINT

SCALE FULL

1 - 2 INTERSTAGE

DESIGN LOAD 3000 #/IN. TENSION (STAGING PRESSURE)

AVERAGE DIAMETER - (N.A.) AVERAGE LENGTH - 42.2 IN. (23.2 IN.)

CROSS SECT. AREA - .641 SQ.IN.

MATERIAL - 2024 AL.

FIGURE 3.2.2-1

REFERENCES: MINUTEMAN ENGINEERING DWG: 25-37645
25-37647

USE FOR DRAWING AND HANDPRINTING — NO TYPEWRITTEN MATERIAL

4. SMALL MISSILE JOINTS

To facilitate the task of the designer whose joint concept application is limited to the non-strategic missiles, this section is restricted to joint designs for missiles of 40 inch diameter or less.

Because so much of the total effort of missile design involves this size range, this section permits the designer to investigate joint concepts related by design loads, function and environmental considerations similar to his own requirements exclusive of the larger strategic vehicles.

A look in greater depth than usual, is taken at the joints used on AGM-69A, both because it represents current developments in the state-of-the-art and because it provides an overall picture of an approach to joint design as applied to a particular vehicle.

Supplementing the AGM-69A concepts, are representative joints used on other tactical and research missiles.

4.1 AGM-69A JOINT DESIGN

The AGM-69A was configured into four sections to facilitate manufacture, assembly and maintenance. These sections are the Payload, Guidance, Propulsion and Control sections (Reference Figure 4.1).

4.1.1 THE PAYLOAD SECTION

This section, of monocoque construction, is provided a circumferential ring at each of three separation joints. Its structural parts are:

1. Impact Fuse Body
2. Forward Nose Shell
3. Warhead Section

4.1.1.1 IMPACT FUSE BODY JOINT (Figure 4.1.1-1)

The Impact Fuse Body interfaces with the Forward Nose Shell. The aft end of the fuse body has external interrupted threads to permit installation and removal from the Forward Nose Shell by rotating the impact fuse a quarter turn.

USE FOR TYPEWRITTEN MATERIAL ONLY

U.S. APOT 1434 REV. A-65

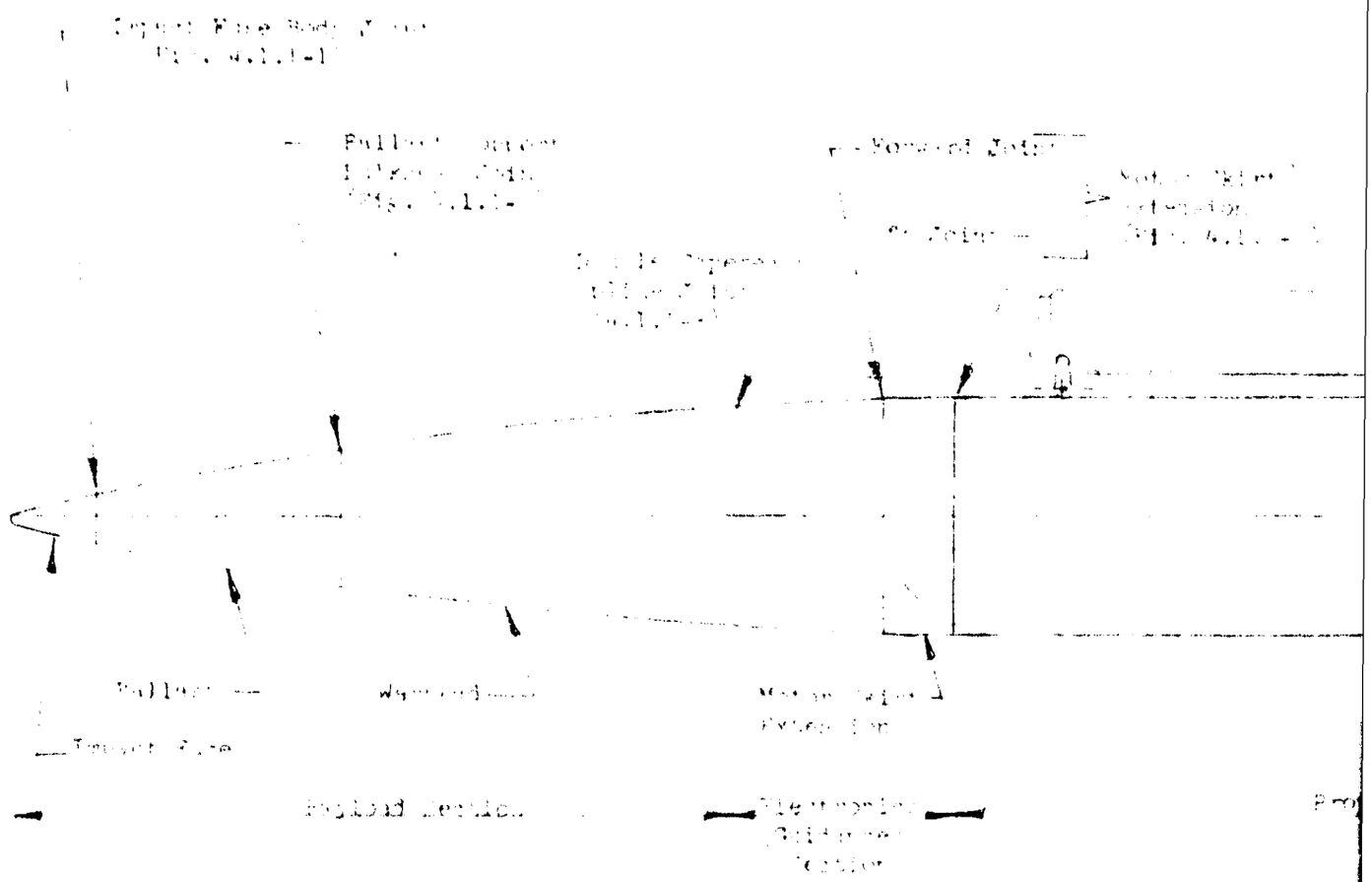

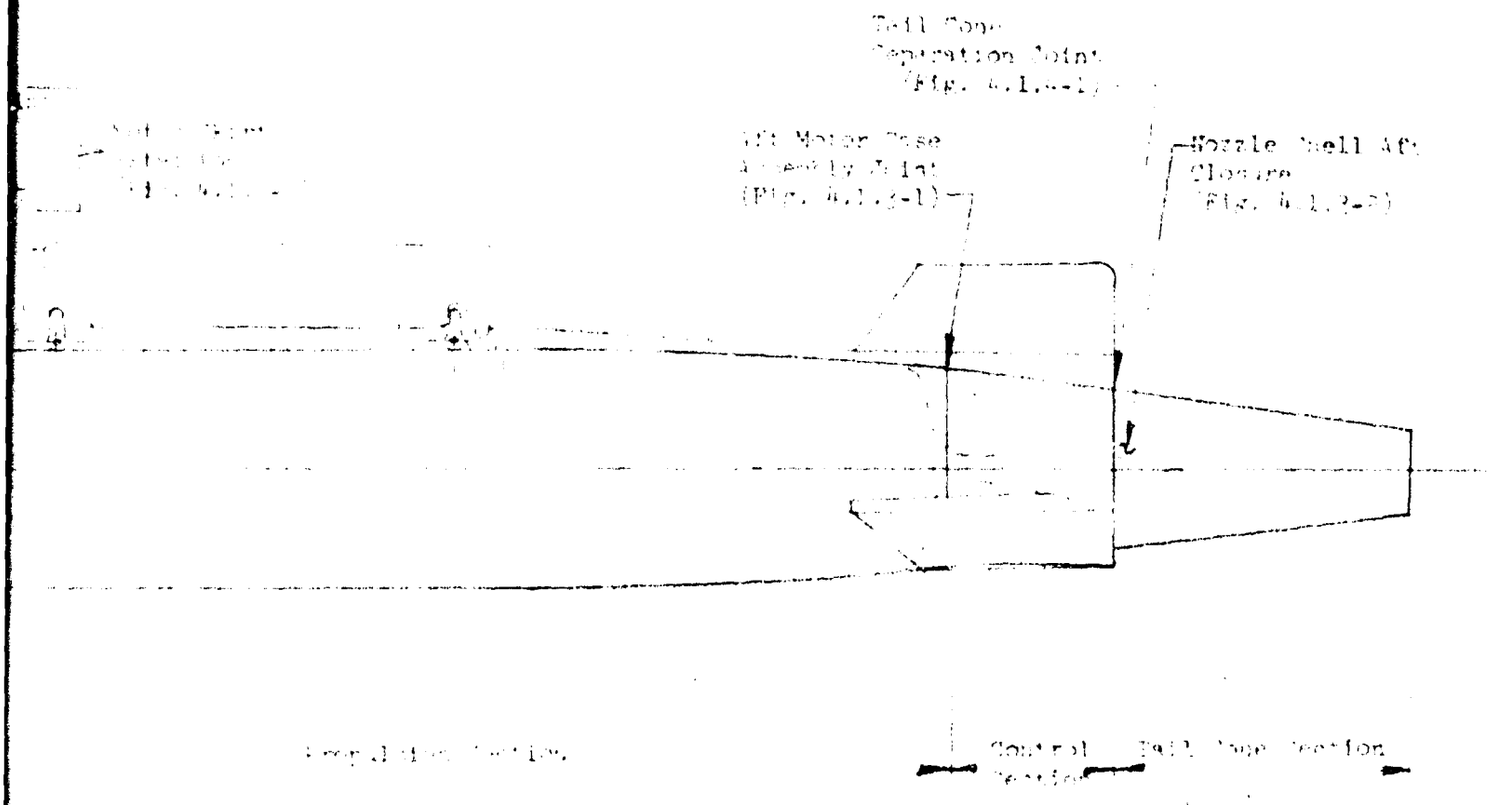
Tail Cone
Separation Joint
(Fig. 4.1.2-1)
Aft Motor Case
Assembly Joint
(Fig. 4.1.2-1)
Nozzle Shell Aft
Closure
(Fig. 4.1.2-2)

FIGURE 4.1

2

4.1.1.1 (Continued)

Riveted to the forward end of the Forward Nose Shell is a steel ring designed to accept the impact fuse interrupted threads. The ring is assembled to the shell using a sealant on the faying surfaces and fastened with monel rivets installed using a wet primer. A nylon insert is installed in a longitudinal groove in the steel ring for locking the impact fuse.

The joint is sealed by means of a synthetic rubber O-ring located in an annular groove provided at the base of the fuse body. Fuse body is torqued to 96 to 110 inch pounds.

USE FOR TYPEWRITTEN MATERIAL ONLY

U3 4602 1434 REV. 8-65

USE FOR DRAWING AND HANDPRINTING — NO TYPEWRITTEN MATERIAL

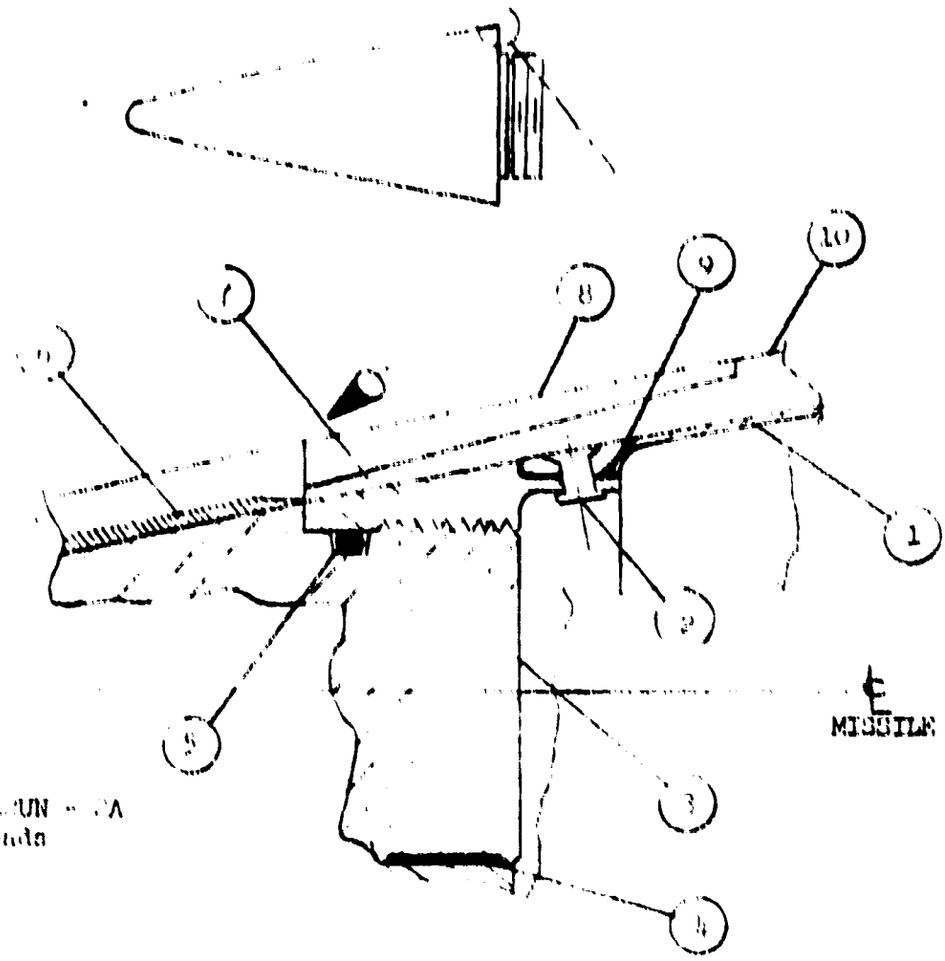

Scale: None

For Materials Data See Table 4.1.-1

IMPACT FUSE BODY JOINT

Reference: AGM-69A Program
DCAGM 20151-1, Para. 4.2.1

Figure 4.1.1-1

A. PART NAME/NUMBER	MATERIAL
(1) Shell, Nose Section (25A28299-101-11)	2024-0 Aluminum QQ-A-250/4 H.T. -T62
(2) Monel Rivet (8 places)	MS 20427 MS
(3) Impact Fuse Body (20A11411-130-11)	2024-T4 Aluminum
(4) Front Nose Ring Insert (26A13536-101-11)	General Purpose Nylon 6/6 Per L-P-410
(5) "O" Ring	MS 28775-140
(6) Radar Absorber (25A24020)	Radar Absorber STB 8-140
(7) Forward Nose Section Ring (29A17189-101-11)	4330M, MIL-S-8699 Normalized & Tempered R.H. C33 MAX H.T. 160-180 Ksi
(8) Collar, Thermal Nose Cap (26A13566-101-11)	Reinforced Phenolic Molding BMS 8-72
(9) Sealant	MIL-S-8802 or BMS 5-44
(10) External Insulation	93-078 Silicone Rubber W/7% Quartz Nicro Crystals Dow-Corning Corp.

Table 4.1-1

USE FOR TYPEWRITTEN MATERIAL ONLY

4.1.1.2 BALLAST SUPPORT BULKHEAD JOINT (Fig. 4.1.1-2)

To the inside of the forward flange of the circumferential Forward Warhead Ring is bolted the Ballast Support Bulkhead Ring. Three 1/4 inch diameter shear bolts are assembled through the ballast and warhead bulkhead flanges only, and fifteen are assembled through the nose section shell as well. Nut plates are riveted to the inside of the ballast support bulkhead ring to receive these bolts. About the outside surface of the aft flange of the Forward Warhead Ring, is riveted the Warhead Section Shell using 24 monel rivets. Access to the eighteen bolt fasteners is provided by a plug in the silicone insulation over the bolt heads.

USE FOR TYPEWRITTEN MATERIAL ONLY

U 3 4807 1434 R E . . 8-65

USE FOR DRAWING AND HANDPRINTING — NO TYPEWRITTEN MATERIAL

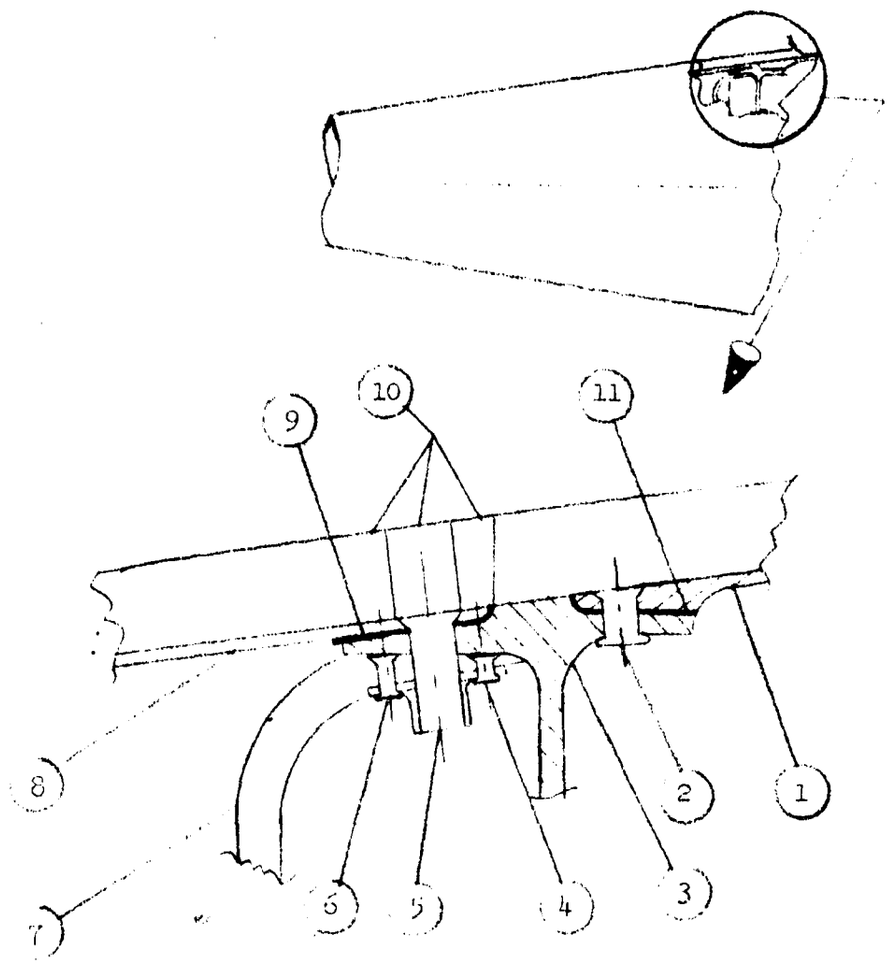

Scale: None

For Design Considerations & Materials
Data see Table 4.1-2

BALLAST SUPPORT BULKHEAD JOINT

References: AGM-69A Program
D2 AGM20151-1, Para. 4.2.3

Figure 4.1.1-2

USE FOR TYPEWRITTEN MATERIAL ONLY

MATERIALS

1	Shell, Warhead Section	2024-0 Aluminum QQ-A-250/4 H.T. -T62
2	Rivet (24 places)	MS 204-27M6
3	Ring, Fwd Warhead Section, Station 34.70 (25A29548)	7075-T73 Aluminum BMS 7-186 Class III
4	Rivet (2 places)	MS 20426D3
5	100° Reduced Head 1/4"Bolt & nut plate	BAC B30EL4 1 NAS 106444
6	Rivet	MS 20426D3, 2017-T4
7	Ring, Ballast Support Bulkhead	AISI 1026, Cold Rolled Annealed MIL-S-7952
8	Shell, Nose Section (25A28299-101-11)	2024-0 Aluminum QQ-A-250/4 H.T. -T62
9	Sealant	Eccobond 211
10	Silicone Insulation (P/N to be added)	93-078 Silicone Rubber W/7% Quartz MicroCrystals Dow Corning Corp.
11	Sealant	MIL-S-8802 or BMS5-44

B. Design Consideration - Nose Shell sized by missile ejection condition producing the following ultimate shell loads:

a. 4,350 lbs transverse shear

b. 52,500 inch pounds bending moment

c. 150 in-lb torsion moment

d. 30.6 psi max external pressure

e. Design temp. 260° F.

1 -6, 15 Req'd (Through 3 , 7 & 8)

-5, 3 Req'd (Through 3 & 7 only)

Table 4.1-2

U 3 4502 1474 REV. 5-65

4.1.1.3 DOUBLE TAPERED SPLINE JOINT (Figure 4.1.1-3)

This joint was designed to support the warhead and to mechanically interface with the missile at the forward end of the electronics section by means of a quick disconnect joint. The joint carries the loads associated with supporting the aft end of the warhead. In addition it satisfies the design considerations shown on Figure 4.1.1-3.

This joint configuration uses internal involute splines to transfer shear and torsion loads to matching external involute splines of the forward Electronics Section. Axial loads are transferred by removable circumferential splines which seat themselves in an annular groove formed after the Payload Section is joined to the Electronics Section. These removable splines are installed through an aperture provided in the aft steel ring at azimuth 45 degrees. An arrangement is provided for indexing one spline and the other is driven into position using an axial force of 100 lbs. To prevent spline backup, a tang on the spline cover plate engages the transverse seration provided at the end of the spline. The spline access cover plate is bolted to the forward Electronics Section Ring by a single A-286 bolt. An O-Ring in the aft Warhead Section Ring forms an environmental seal after the Payload Section is combined with the Electronics Section.

USE FOR TYPEWRITTEN MATERIAL ONLY

U3 4807 1434 REV. 8-68

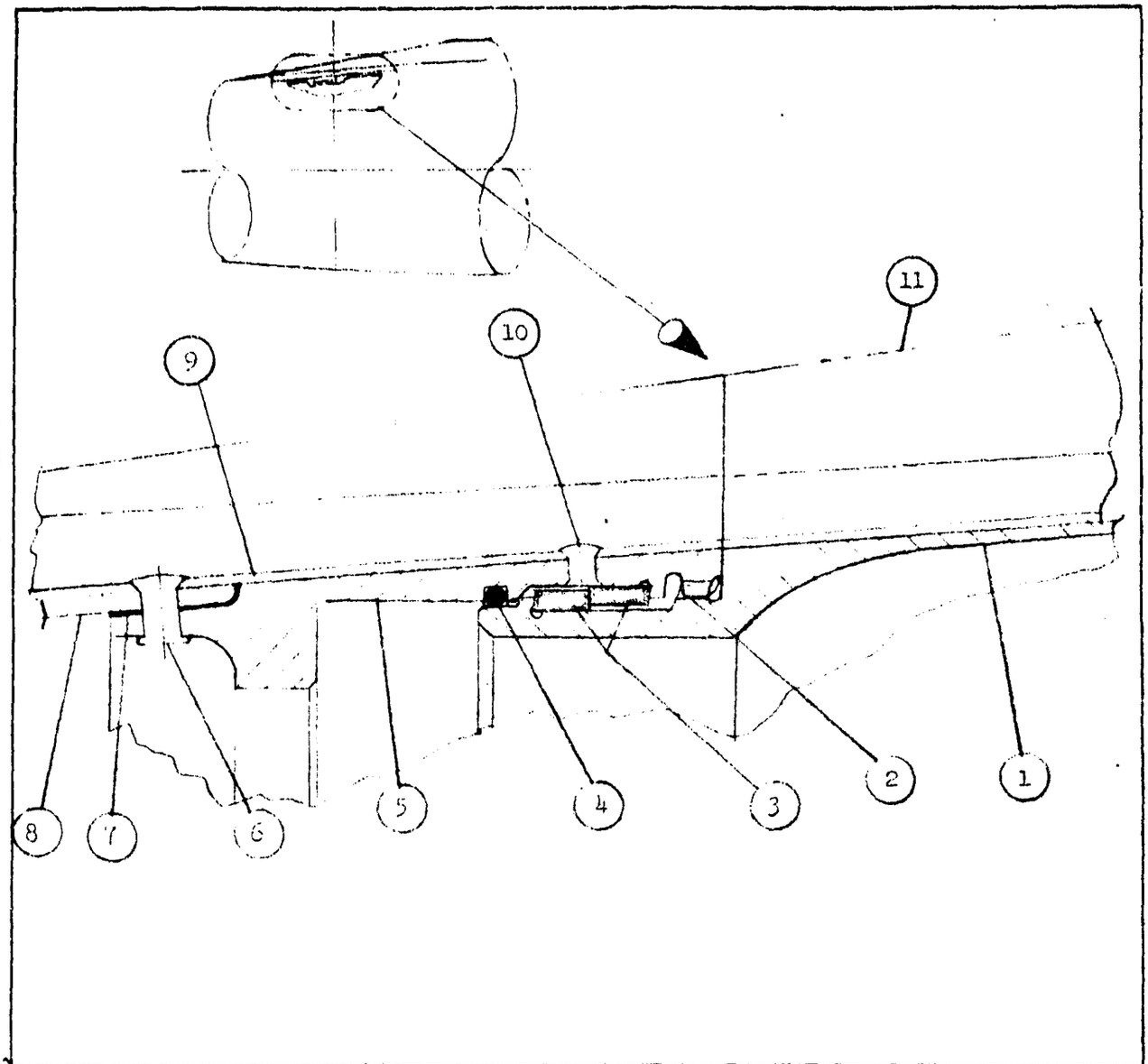

For Design and Materials Data
See Table 4.1-3

DOUBLE TAPERED SPLINE JOINT

Reference: AGM-69A Program
DC AGM001[illegible], Para. 4.2.1.2

Figure 4.1.1-3

USE FOR DRAWING AND HANDPRINTING — NO TYPEWRITTEN MATERIAL

A. PART NAME/NUMBER — MATERIALS

1	Electronics Section Shell	Steel 4330 M, MIL-S-8699 H.T. 160-189 Ksi
2	Involute Splines (Part of 5)	
3	Double Tapered Splines (2)	Steel 4130 MIL-S-18729 Normalized H.T. 135-145 Kpsi
4	"O" Ring	Silicone Rubber
5	Aft Warhead Section Ring	Steel 4330 M, MIL-S-8699 H.T. 160-180 Ksi
6	Monel Rivet (60 places)	MS 20427M6
7	Sealant	MIL-S-8802 or BMS 5-44
8	Shell, Warhead Section	Aluminum 2024-0, QQ-A-250/4 H.T. -T62
9	Plate, Raceway Extension	Aluminum 2024-T4, QQ-A-250/11
10	Monel Rivet	
11	External Insulation	93-078 Silicone Rubber W/7% Quartz Micro-crystals Dow-Corning Corp.

B. DESIGN CONDITIONS

a. Transfer 270 K in-lb ultimate body bending load, 10 K lb ultimate transverse shear load, and 900 in-lb ultimate torsion load.

b. Design temperature for (a.) is 250° F.

c. Joint to have Payload Section interchange capability within 30 minutes while missile is in carrier rack.

d. Minimized surface steps and gaps to satisfy radar cross section and aerodynamics requirements.

e. Design must not compromise volumetric requirements imposed by warhead and electronics components.

Table 4.1-3

USE FOR TYPEWRITTEN MATERIAL ONLY

U 3 4802 1474 R F V . 8-65

4.1.2 ELECTRONICS SECTION (Figure 4.1.2-1)

This section is actually an assembly of two sections; the Electronics Shell forward and the Motor Skirt Extension aft. The structural joint components are identified as follows:

1. Electronic Section Shell with an integrally machined fitting at the forward end to accept payload sections by means of a quick disconnect joint.
2. Motor Skirt Extension
3. Raceway Fairing and Umbilical Cover

4.1.2.1 ELECTRONICS SECTION FORWARD JOINT (Figure 4.1.1-3)

The internally machined ring at the forward end of the Electronics Section Shell is designed to mechanically interface with the Payload Section as part of the Double Tapered Spline Joint described in paragraph 4.1.1.3.

4.1.2.2 MOTOR SKIRT EXTENSION (Figure 4.1.2-2)

At the interface of the Electronics Shell forward and the Motor Skirt Extension is located the Electronic Support Fitting (see Item No. 3). This structural member provides a mounting surface for electronic equipment and is machined as an integral part of the environmental and umbilical systems. Its circumferential flange is fitted with nut plates to permit attachment of a conventional bolted spline joint. A similar joint less the support fitting provides the interface between the Motor Skirt Extension and the Propulsion Section.

USE FOR TYPEWRITTEN MATERIAL ONLY

USE FOR DRAWING AND HANDPRINTING — NO TYPEWRITTEN MATERIAL

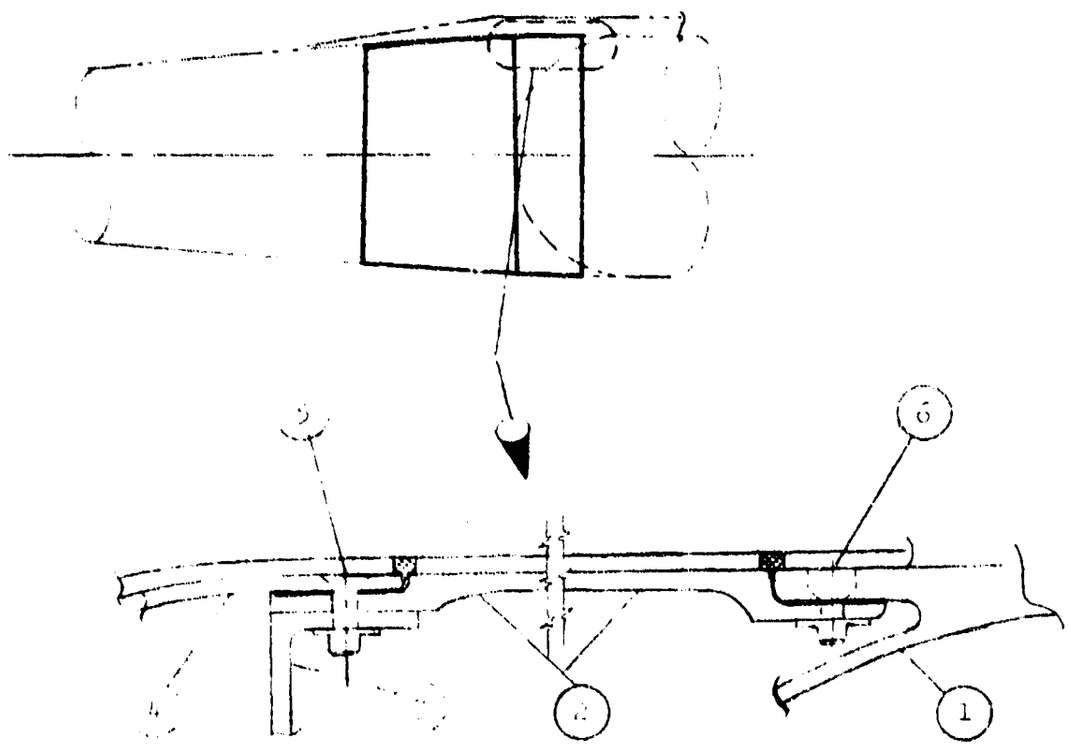

Scale: None

For Design Considerations & Materials Data see Table 4.1-4.

MOTOR SKIRT EXTENSION
FORE AND AFT ASSY JOINTS

References: AGM-69A
D2AGM 70140-1, Para. 4.1.1.3

Figure 4.1.2-2

A. PART NAME/NUMBER — MATERIAL

1 Motor Case, Fwd Dome & Skirt (20A14004)	Steel 4335V Air Melt Vacuum Degassed Hit. 205-225kps
2 Motor Skirt Extension (25A28087)	Steel 4330M MIL-S-8699 Hit. 160-180ksi
3 Electronic Support Casting (25A28296)	Aluminum 356-T6 QQ-A-601
4 Electronics Section Shell (25A28613)	Steel 4330M MIL-S-8699 Hit. 160-180ksi
5 5/16 inch Bolts	BAC B30EL5-16 (2 places) BAC B30EL5-7 (27 places)
6 1/4 inch Bolts	NAS 1504-4 (43 places)

B. DESIGN CONSIDERATION

Critical condition is missile ejection which produces:

1. Ultimate bending load of 375,000 in lb
2. Ultimate transverse shear load of 10,000 lb at 282°F Shell temp.

Table 4.1-4

USE FOR TYPEWRITTEN MATERIAL ONLY

4.1.3 Control Section

This section interfaces with the Propulsion Section forward and the Tail Cone Section aft.

4.1.3.1 Aft Motor Case Assembly Joint (Fig. 4.1.3-1)

This joint provides the mechanical interface for attaching the Control Section to the Propulsion Section. It consists of a forged ring welded to the aft end of the motor casing. The Hydraulic Manifold is mounted on the inside of the forged ring aft flange and the Control Section Fairing is mounted on the outside of the same flange. In addition, the Nozzle Shell is mated to the Aft Motor Case Ring and mechanically held by a threaded retaining ring.

4.1.3.2 Nozzle Closure (Fig. 4.1.3-2)

A nozzle closure is included on the aft end of the nozzle shell which seals the motor to maintain the propellant in a controlled environment prior to motor firing. The closure is designed to rupture cleanly when the motor chamber pressure rises to 175± 25 psi at first pulse ignition. The closure is bonded to the nozzle shell with an epoxy adhesive. The surface which forms the outer periphery of the nozzle closure forms an interface with the Control Section Fairing.

4.1.4 Tail Cone Section

The single joint of the Tail Cone Section provides the mechanical interface with the Control Section.

USE FOR TYPEWRITTEN MATERIAL ONLY

U.S. 4802 1834 REV. 9-65

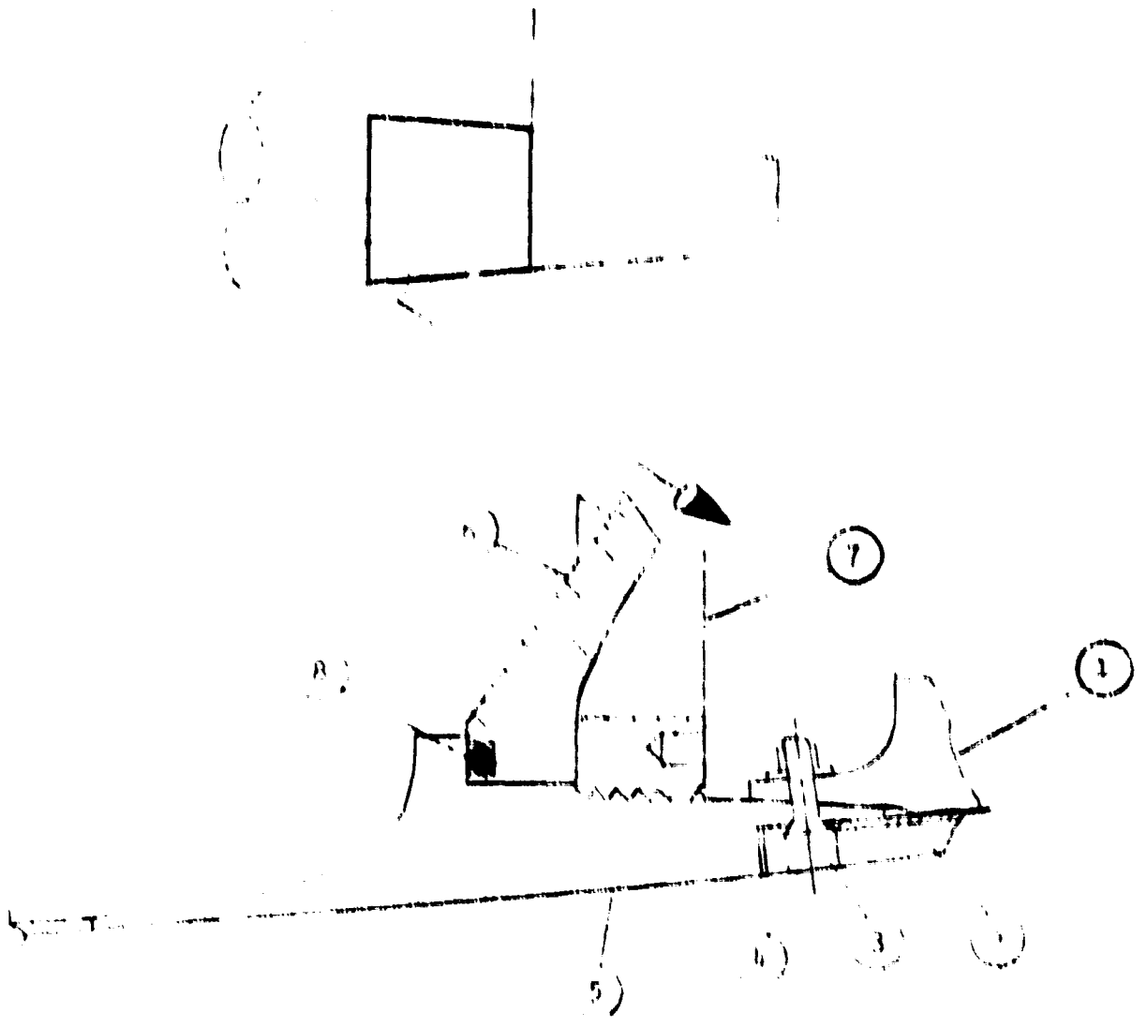

Scale: None

For design configuration and materials see Table 4.1-

AFT MOTOR CASE ASSEMBLY JOINT

Reference: AGM-69A
D AGM 01-05-1, Para. 4.1.3.1

FIGURE 4.1.3-1

USE FOR DRAWING AND HANDPRINTING — NO TYPEWRITTEN MATERIAL

A. Part Name/Number — Material

(1.) Hydraulic Manifold Forging — Aluminum 6061-T6 QQ-A-367

(2.) Fairing Shell, Control Section (25A30080-110-11) — Aluminum 6061-0 QQ-A-250/11 Mit. -T6

(3.) 1/4" Bolts — 12 BAC30FB4-7 (thru 1, 2, & 5)

(4.) Silicone Insulation (Ring)

(5.) Motor Case Aft Ring (20A14004) — Steel 4335V, Air Melt Vacuum Degassed Mit. 205-225Ksi

(6.) Nozzle Shell — Same as (5)

(7.) Motor Case Retaining Ring — Same as (5)

(8.) [illegible] Ring Seal

B. Design Considerations

(To be added)

TABLE 4.1-5

USE FOR TYPEWRITTEN MATERIAL ONLY

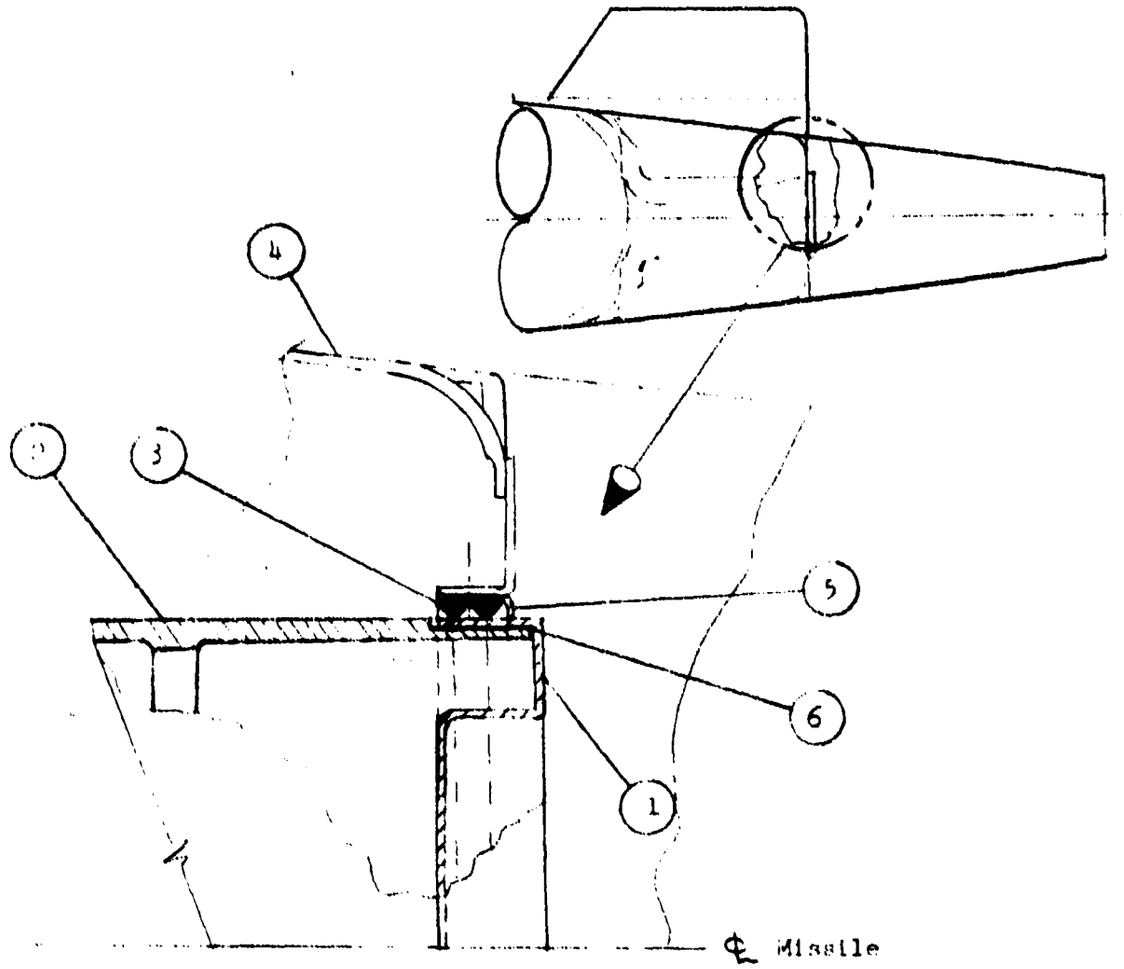

Scale: None

For design considerations and materials Data
See Table 4.1-6

NOZZLE SHELL AFT CLOSURE

Reference: AGM-64A Program D2AGM-0150-1

FIGURE 4.1.3-2

USE FOR DRAWING AND HANDPRINTING — NO TYPEWRITTEN MATERIAL

A. Part Name/Number	Material
1. Nozzle Closure	Steel 6061-T6
2. Aft Closure Shell	Steel 4335V Air Melt Vacuum Degassed Hit. 205-225Ksi
3. Engine Exhaust Seal (26413528)	Silicone Rubber BMS 1-45
4. Tail Cone Attach Fitting (29A17132)	Aluminum QQ-A-250/4
5. Seal Retainer Ring (25A28080-104-11)	Aluminum 6061-T4 QQ-A-2510/11 Hit. -T6
6. Epoxy Adhesive	

B. Design Considerations:
(To be added)

TABLE 4.1-6

USE FOR TYPEWRITTEN MATERIAL ONLY

U 3 4802 1434 - F V . 8-65

4.1.4.1 TAIL CONE SEPARATION JOINT (Figure 4.1.4-1)

The Tail Cone is an aerodynamic fairing attached to the aft end of the AGM-69A missile to reduce drag force during external carry by the carrier aircraft. The tail cone remains attached to the missile until rocket motor ignition occurs durring launch. Motor ignition causes over-pressurization of the tail cone shell, and at approximately 33 pounds per square inch (psi) internal pressure. The Tail Cone attachment bushing shear out, resulting in separation of the tail cone from the missile.

Through-drilled holes in each of three longitudinal depressions in the forward portion of the spun shell, provide access to tail cone fasteners at 60, 180 and 300 degrees azimuth, for the assembly/disassembly function.

USE FOR TYPEWRITTEN MATERIAL ONLY

U.S. 4807 1434 R.E.V. 8-65

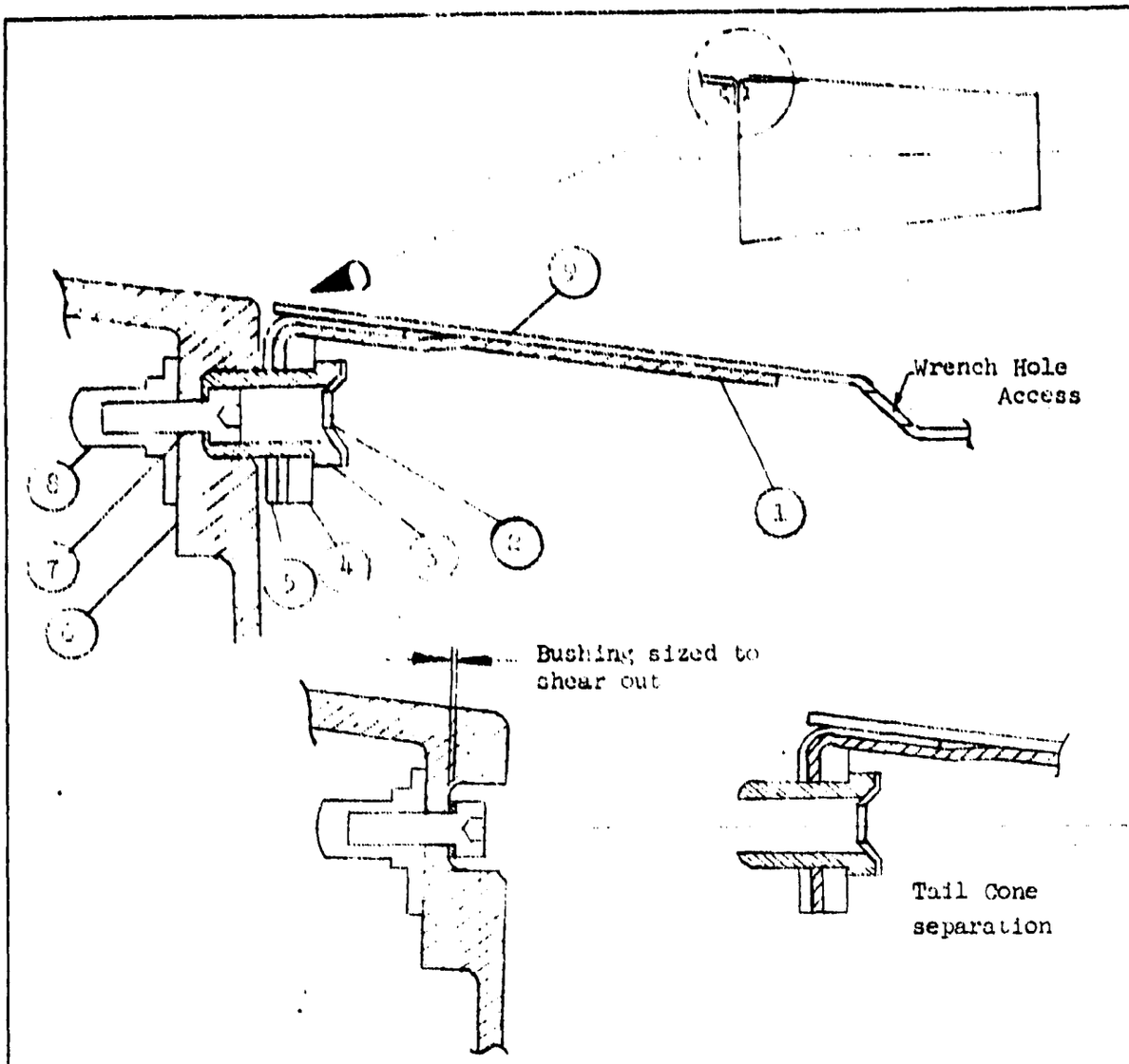

TAIL CONE SEPARATION JOINT

Scale: None

For Design Considerations and Materials Data See Table 4.1-7

TAIL CONE SEPARATION JOINT

Reference: AGM-59A
D2 AGM 20150-1, D2AGM 20148-1

Figure 4.1.4-1

USE FOR DRAWING AND HANDPRINTING — NO TYPEWRITTEN MATERIAL

A. PART NAME/NUMBER

	PART NAME/NUMBER	MATERIAL
1	Doubler, Tail Cone (25A258288-101-11)	2024-0 QQ-A-250/5 H.T. -T6
2	Retainer, Tail Cone (29A17190-101-11)	6061-0 QQ-A-250/11
3	Bushing, Tail Cone Attachment (29A17191-101-11)	6061-T6 QQ-A-250/11
4	Plate, Filler, Tail Cone (26A13529-101-11)	6061-T6 QQ-A-250/11 H.T. -T6
5	Ring, Tail Cone (25A28289-101-11)	2024-0 QQ-A-250/4 H.T. -T6
6	Tail Cone Attach Fitting (25A17132)	2024-T6 QQ-A-250/4
7	Attachment Screw (3 places)	MS 16998-28
8	Nut Plate	BACNIOEN
9	Shell, Tail Cone (25A28291-101-11)	6061-0 QQ-A-250/11 H.T. -T6

B. DESIGN CONSIDERATIONS:

Fairing to withstand local aerodynamic ultimate loads of 21.3 psi and Tail Cone jettison ultimate load of 4130 lbs.

Table 4.1-7

USE FOR TYPEWRITTEN MATERIAL ONLY

4.2 SELECTED SMALL MISSILE JOINTS

Small missile joint applications which differ from approaches used for AGM-69A are presented in this section together with such design data as was available.

4.2.1 The Exos

A three stage sounding vehicle, the Exos started with the Honest John for its first stage. A ground-to-ground artillery rocket, Honest John yields very high thrust for over four seconds. The second stage used a Nike booster. Third stage was provided by a version of the Thiokol Recruit known as the Yardbird, which had an acceleration capability of approximately 80 g's. The joint used between the second and third stages serves both as an assembly and as a separation joint.

The flared skirt on the forward stage and the coupling casting bolted to the aft stage (reference Fig. 4.2-1) are both threaded on the outside of the blast diaphragm. Upon forward (third) stage ignition, the pressure of the exiting gas bows the diaphragm so that the threads become disengated from the flared skirt, and a clean rapid separation occurs.

This system is generally used between stages which are fired in succession without a coast period, to avoid large drag losses caused by the relatively large skirt diameter and the burned out preceding stage.

USE FOR TYPEWRITTEN MATERIAL ONLY

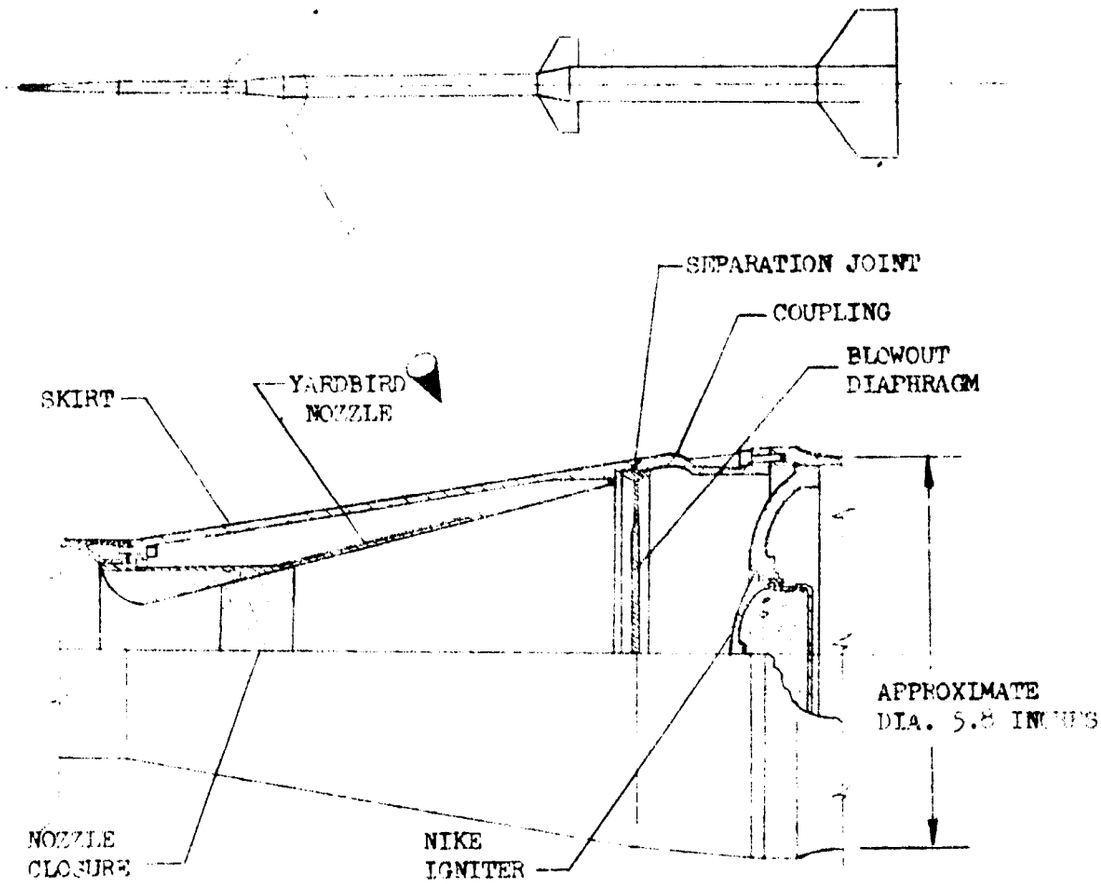

BLAST DIAPHRAGM SEPARATION JOINT

Scale: None

References: Exos Sounding Rocket, Small Sounding Rocket Symposium, XIth International Astronautical Congress, Vol. II, Stockholm, 1960

FIGURE 6.2-1

USE FOR TYPEWRITTEN MATERIAL ONLY

4.3 **The Joint Selection Process**

4.3.1 An example of the process which permits selection of a candidate joint for a particular application was the selection of the Double Tapered Spline Joint (Reference Fig. 4.1.1-3) for the payload/electronic section interface on ACM-OVM.

4.3.2 In the study shown by Figure 4.3-1, nine candidate joint concepts were compared against a weighted list of design considerations. The primary candidate from this and similar studies was then compared in the trade study of Figure 4.3-2, which enabled the designer to determine which concept best suited his application.

Notice that the requirement (Reference Table 4.1-3) that the joint permit exchange of the payload while the missile is installed in the carrier rack, had a significant impact on the choice, since the spline joint required only limited access to the missile body to permit the exchange function.

USE FOR TYPEWRITTEN MATERIAL ONLY

	TYPE	ACTUATOR	OPERATES QUICKLY, EASILY WITH FEW SPECIAL TOOLS 5.0	HAS RELIABLE SEAL 1.0	RE-USABLE MANY TIMES .3	EASY TO FABRICATE .2	LOW COST 2.0	USES LITTLE SPACE .3	LIGHT WEIGHT .3	LITTLE CHANCE OF INCORRECT OR INCOMPLETE INSTALLATION .5	TOTAL 12.0
1	BREECH-LOCK ACME NO-LEAD THREADS	MANUAL: 1. INSERT 2. ROTATE 1/8 TURN 3. LOCKING PIN	2	.8	1	.2	1.4	.4	.2	.5	5.5
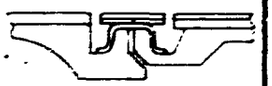 2	EXTERNAL CLAMP	CLAMP SCREW, WRENCH TIGHTENED, SINGLE FASTENER	3	.5	.2	.1	.8	.4	.2	.4	5.5
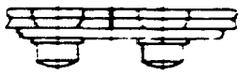 3	BOLTED JOINT	WRENCH TIGHTENED 30 FASTENERS (APPROX.	.5	.2	.1	[illegible]	1.2	.4	.4	.4	2.7
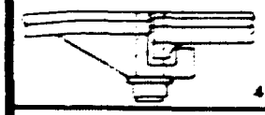 4	INTER-RUPTED FLANGE	MANUAL: 1. INSERT 2. ROTATE 1/8 TURN 3. LOCKING PIN	2	.8	.1	.2	1.1	.5	.4	.5	5.1
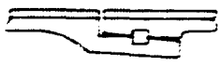 5	SHEAR KEY	MANUAL: 1. MATE 2. INSTALL SHEAR KEY 3. LOCK PIN	1	.8	.1	1	1.4	.5	.5	.4	4.8
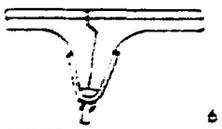 6	INTERNAL CLAMP	EXPANDING INTERNAL CLAMP, WRENCH OPERATED & LOCKED	3.5	.6	.2	1	.2	.5	.2	.4	5.2
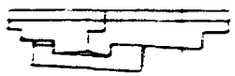 7	INTERNAL FLOATING LOCK RING	ROTATING LOCK RING GEAR ACTUATED CAM-LOCK FACES	2	.7	.1	1	.4	.5	.3	.3	4.2
8	EXTERNAL THREADED COUPLING	SPANNER OR STRAP WRENCH TURNS FLOATING RING	2	.5	.1	.1	1.6	.5	.3	.4	4.5
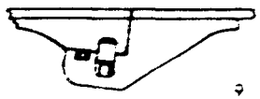 9	SHEAR KEY, SPRING LOADED	PLIERS-TYPE OR C-CLAMP TYPE TOOL COMPRESSES KEY	3.5	.5	.2	.1	1.2	.4	.4	.5	7.3

ITEM							
COLUMN	1	2	3	4	5	6	
STA 62.30 BODY JOINT (REF: CONFIG 29)	WEIGHT LB	COST	EASE OF OPERATION	WITHIN SPACE LIMITATION	COMPATIBILITY WITH AEC W/H	MFG COMPLEXITY	EA CO
SNAP WIRE (D2AGM12209-5) 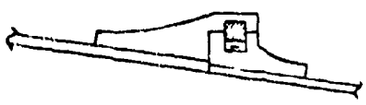	13.2 WT IS LOW BECAUSE NO ADDITIONAL SPACE IN GROOVE WAS PROVIDED FOR LOCK RING EXP	$111.00 AVE COST 5	1. REMOVE COVER 2. EXPAND RING 3. SLIDE COMPT FWD UNTIL LOCK RING CLEARS GROOVE	NO LOAD REQMT CAUSES JOINT TO EXCEED SPACE AVAILABLE 1	CURRENT W/H MTG TECHNIQUES OF AEC ARE NOT ADAPTABLE 2	4.44 M/H (FAB/COST ACCT)	CA CL & R MO VIB CA GA LO PR
COLLET (D2AGM12209-5)	19.8	$214.00 AVE COST 5	1. LOOSEN 3 SET SCREWS 2. ROTATE COLLET	NO LOAD REQMT CAUSES JOINT TO EXCEED SPACE AVAILABLE 1	CURRENT W/H MTG TECHNIQUES ARE NOT ADAPTABLE 2	8.49 M/H (FAB/COST ACCT)	HI TO CA GA WE SU LO PR CA
BOLTED 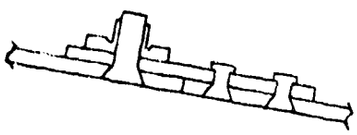	6.3	$85.00 AVE COST 5	1. REMOVE 26 BOLTS (10 MIN. OPERATION)	YES	AEC W/H MTG REQMT CAN BE INCORPORATED INTO THIS JOINT	3.52 M/H (FAB/COST ACCT)	FA IN WE PR FA SU IN JO WE
TAPERED SPLINE 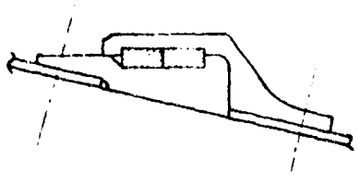	10.1	$98.00 AVE COST 5	1. REMOVE COVER 2. UNLOCK SPLINES 3. REMOVE 2 SPLINES	YES	AEC W/H MTG REQMT CAN BE INCORPORATED INTO THIS JOINT	3.02 M/H (FAB/COST ACCT)	CA RI AL SP ST N M M G M

1 JOINT INTERFERES WITH CONFIG NO. 29 W/H

2 AEC USES FLANGE MTG, RADIAL BOLTS, LARGE THD'D NUT OR INTEGRAL CASE - W/H

3 MAX WIDTH OF CRACK DESIRED .001 WHEN DEPTH EXCEEDS .10

4 MARGINS CANNOT BE REDUCED BEC MAT'L REQD FOR FAB

5 EXCLUDES TOOL DESIGN ENGR DES TOOL FAB COSTS & OPERATIONS CO TO ALL JOINTS

1

CONSIDERATION

(5)	(6)	(7)	(8)	(9)	(10)	(11)	(12)	(13)	(14)
MPATIBILITY H AEC W/H	MFG COMPLEXITY	EASE OF CORR CONT	RELIABILITY (FAILURE MODE)	REUSABLE	ACCESS TO JOINT FASTENER	SPECIAL TOOLS	INSTL RISK	SEALING SYSTEM	INSTL EFFECT ON O
URRENT /H MTG CHNIQUES F AEC RE NOT DAPTABLE 2	4.44 M/H (FAB/COST ACCT)	CAD PLATED CLOSE FIT & RELATIVE MOTION IN VIB & INSTL CAUSE GALLING & LOSS OF CORR PROTECTION	CENTERING SPRING FAILURE WOULD PERMIT LOCK RING TO UN-LOCK ON ONE SIDE	NO LIMITATION ON LOCK COVER SCREW REPLACEMENT	THRU ACCESS OPENING	RING EXPANSION TOOL REQD	RING FAILS TO ENGAGE	STATIC "O" RING W/RING ACCESS COVER	1. ACCE OPEN REQU CORR COV BOLT
URRENT /H MTG CHNIQUES RE NOT DAPTABLE 2	8.49 M/H (FAB/COST ACCT)	HIGH INSTL TORQUE REQD CAUSES GALLING ON WEDGING SURFACES & LOSS OF CORR PROTECTION CAD PLATE	SET SCREW BECOMES LOOSE OR IN INAD-EQUATELY SET	SET SCREW COVER SCREW REPLACEMENT REQD BECAUSE OF CAD PLATE GALLING	EXPOSED AT ALL TIMES	LARGE STRAP TYPE TORQUE WRENCH REQD	FAIL TO TORQUE JOINTS OR SECURE SET SCREWS	STATIC "O" RING BUT CLEARANCE GAP REQD FOR COLLET ROTATION	1. COL REQU SEPA CORR INSU 2. SET SCRE PLUG
EC W/H MTG REQMT AN BE IN-CORPORATED NTO THIS OINT	3.52 M/H (FAB/COST ACCT)	FASTEMERS INSTALLED WITH WET PRIMER. FAYING SURFACES IN RIVET JOINT ALSO WET PRIMED	BOLTS MAY BE CROSS THREADED	BOLTS REQUIRE REPLACEMENT BECAUSE OF FINISH GALLING	REMOVE 26 BOLT COVER PLUGS IN CORK	NONE	FAIL TO TORQUE BOLTS	STATIC "O" RING & WET PRIMER ON BOLTS	26 HO IN CO TO PL
EC W/H MTG REQMT AN BE IN-CORPORATED NTO THIS OINT	3.02 M/H (FAB/COST ACCT)	CAD PLATED RING & AL ALODINED SPLINES STATIC JOINT NO MOVEMENT METAL TO METAL ZERO GAP ENGAGE-MENT	NEGLECT LOCKWIRE OF SPLINES AFTER INSTL	NO LIMITATION ON SPLINE. COVER SCREW REQUIRES REPLACEMENT BECAUSE OF FINISH GALLING	THRU ACCESS OPENING	SPLINE HANDLE REQD	INADEQUATE LOCKWIRE OF SELF-LOCKING SPLINES	STATIC "O" RING W/SPLINE ACCESS COVER	1. AC OP PL RE 2. CO BO PL

ARGINS CANNOT BE REDUCED BECAUSE OF MIN AT'L REQD FOR FAB

XCLUDES TOOL DESIGN ENGR DESIGN & OOL FAB COSTS & OPERATIONS COMMON O ALL JOINTS

	(14)	(15)	(16)	(17)	(18)	(19)	(20)	(21)	(22)
NG M	INSTL EFFECTS ON CORK	NUMBER OF FAB PARTS	HARDWARE PARTS	JOINT COMPLEXITY	INTERCHANGE-ABILITY	RADAR CROSS SECTION	TYPE FAB TOOLS REQ'D	CAPITAL INVESTMENT	STRESS LEVEL
NG G S	1. ACCESS OPENING REQUIRES CORK PLUG COVER BOLT PLUG	5-REQD 1-COVER 2-FTG 1-LOCK RING 1-CENTER-ING RING	2-REQD 1-COVER SCREW 1-INDEX PIN	SIMPLE 5-MATCHED SURFACES 1-ANNUALR MATCH	SIMPLE LOCK RING GROOVE ALIGNMENT IS CRITICAL	GOOD 1-CRACK 3	LATHE GRINDERS MILL ASSY 34	$655K	1. POSITIVE MARGIN 2. OK PER STRESS UNIT
NG ANCE QD OLLET ION	1. COLLET REQUIRES SEPARATE CORK INSULATION 2. SET SCREW PLUG (3)	3-REQD 2-FTG 1-COLLET	4-REQD 3-SET SCREWS 1-INDEX PIN	MOST COM-PLICATED 48-MATCHED SURFACES DOUBLE CAM LUGS CLOSE TOLERANCES SET SCREWS	LUG ALIGNMENT CRITICAL	2-CRACK 3	LATHE GRINDERS MILL DRILL JIGS ASSY 29	$682.7K	1. POSITIVE MARGIN 2. OK PER STRESS UNIT
NG OLTS	26 HOLES IN CORK TO PLUG	2-REQD 1-DOUBLER 1-FILLER	52-REQD 26-BOLTS 26-NUT PLATES	COMPLICATED 26-MATCHING BOLT HOLES ON TWO MATCHED OGIVES	26 MATCHED RADIAL BOLT HOLES DRILL JIGS & GAGES REQD	1-CRACK 26-RECESSED SCREWS 3	LATHE MILL BROACH DRILL JIGS ASSY 20	$334.6K	NO STRESS CHECK (BOLTS UNACCEPTABLE)
C ING LINE SS ER	1. ACCESS OPENING PLUG REQD 2. COVER BOLT PLUG	5-REQD 2-FTG 2-SPLINE 1-COVER	2-REQD 1-INDEX PIN 1-COVER SCREW	SIMPLEST 3-MATCHED SURFACES 1-ANNULAR MATCH	SIMPLEST NO CRITICAL TOLERANCES PERPEN-DICULARITY OF MATING SURFACE TO ℄ CRITICAL	BEST 2-GROOVES REQUIRE FILLING NO CRACK 3	FORMING ROUTER DRILL JIGS ASSY 11	$56'.7K	1. LG POSITIVE MARGINS 4 2. OK PER STRESS UNIT

BODY JOINT
TRADE STUDY
CALARSON 4/25/6

4.4 AN ORIGINAL JOINT CONCEPT

This section presents a joint concept for a missile of approximately 16 to 17 inches in diameter. Its primary purpose is to provide attachment of a payload section to the main body of the missile. Its capability is intended to provide the following:

I. Transfer:

a. 270,000 in-lb. ultimate bending load.

b. 10,000 lb. ultimate transverse shear load.

c. 900 in-lb. ultimate torsion load.

II. Thirty minute assembly/disassembly of payload section while missile is attached to carrier aircraft.

III. Minimize surface gaps and steps to satisfy radar cross section and aerodynamic requirements.

IV. Maximum possible internal volume for warhead and electronic equipment.

V. Satisfy I through IV at a design temperature of 270° F.

4.4.1 DESCRIPTION

The joint consists of a forward ring attached by rivets to the nose section, and an aft ring similarly attached to the main body shell. The aft ring is assembled inside the forward ring so that twelve bayonets on the aft ring pass through twelve slots in the main flange of the forward ring. (Reference Figure 4.4.1-1). As viewed from the rear, the aft ring is rotated clockwise through approximately six degrees (6°). This draws the inclined bayonet surfaces of the aft ring flange against matching surfaces on the forward ring flange, while forcing the principal circumferential flanges of each to bear on one other. While thus held, the assembly is locked by installing a lock bolt through lugs, one on each ring, which have been drawn together by the rotation. Access is provided

USE FOR TYPEWRITTEN MATERIAL ONLY

U3 4802 1434 REV. 6-65

4.4 AN ORIGINAL JOINT CONCEPT

This section presents a joint concept for a missile of approximately 16 to 17 inches in diameter. Its primary purpose is to provide attachment of a payload section to the main body of the missile. Its capability is intended to provide the following:

I. Transfer:

a. 270,000 in-lb. ultimate bending load.

b. 10,000 lb. ultimate transverse shear load.

c. 900 in-lb. ultimate torsion load.

II. Thirty minute assembly/disassembly of payload section while missile is attached to carrier aircraft.

III. Minimize surface gaps and steps to satisfy radar cross section and aerodynamic requirements.

IV. Maximum possible internal volume for warhead and electronic equipment.

V. Satisfy I through IV at a design temperature of 270° F.

4.4.1 DESCRIPTION

The joint consists of a forward ring attached by rivets to the nose section, and an aft ring similarly attached to the main body shell. The aft ring is assembled inside the forward ring so that twelve bayonets on the aft ring pass through twelve slots in the main flange of the forward ring. (Reference Figure 4.4.1-1). As viewed from the rear, the aft ring is rotated clockwise through approximately six degrees (6°). This draws the inclined bayonet surfaces of the aft ring flange against matching surfaces on the forward ring flange, while forcing the principal circumferential flanges of each to bear on one other. While thus held, the assembly is locked by installing a lock bolt through lugs, one on each ring, which have been drawn together by the rotation. Access is provided

USE FOR TYPEWRITTEN MATERIAL ONLY

U 3 4802 1434 REV. 8-65

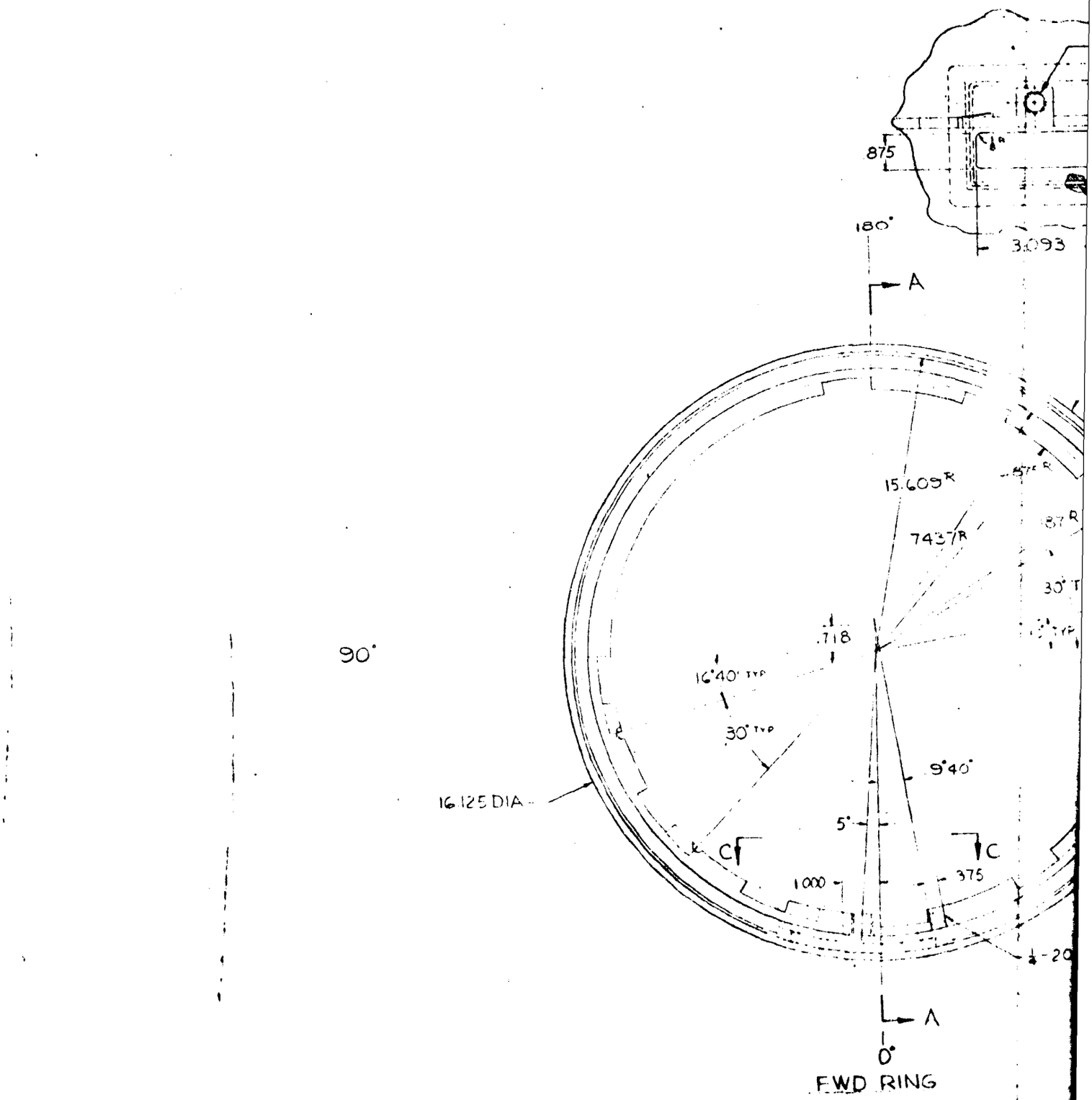
875
180°
3.093
A
15.609R
7.437R
.718
16°40' TYP
30° TYP
90°
9°40'
16.125 DIA
5°
C
C
1.000
.375
A
0°
FWD RING

1

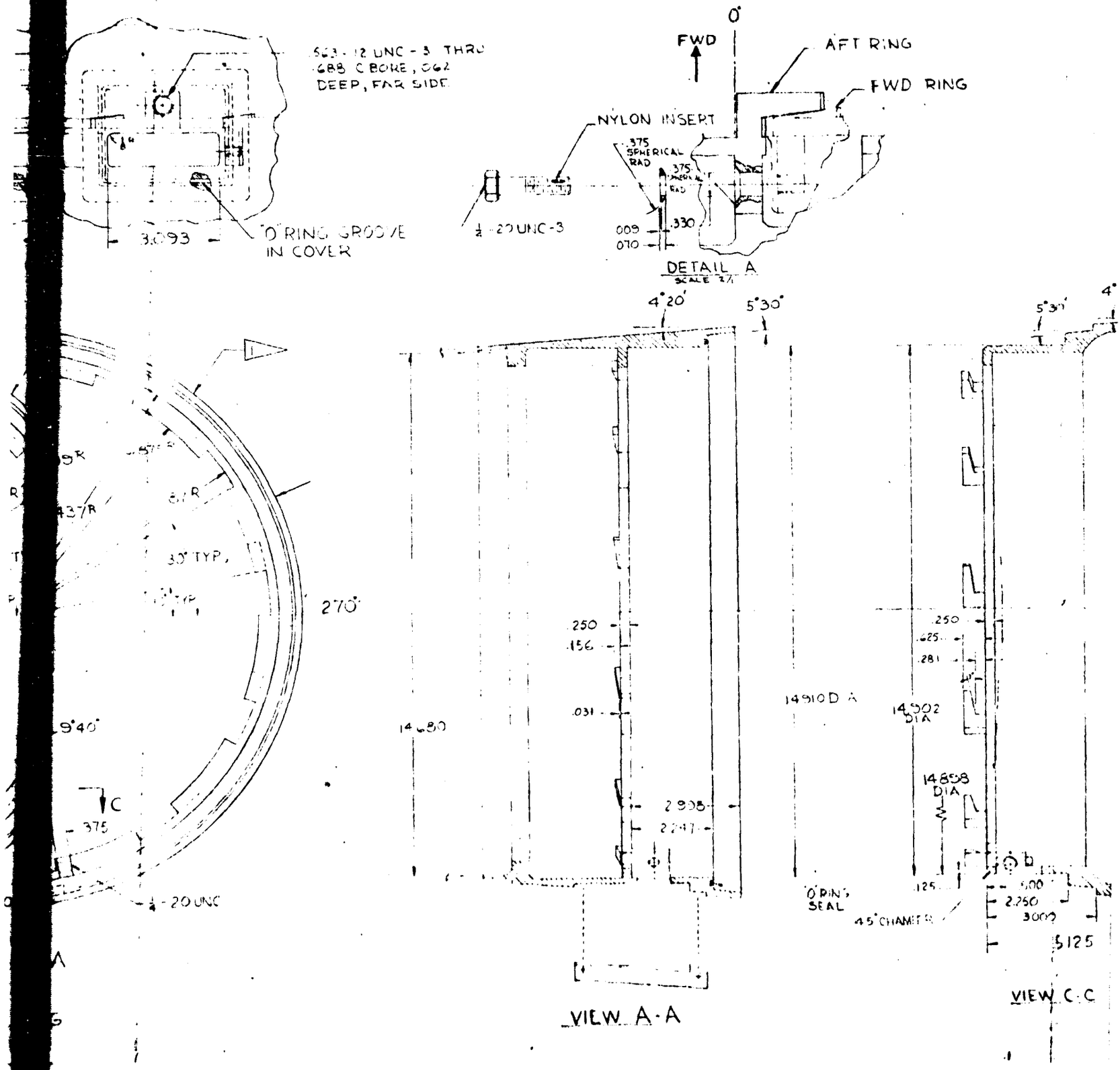
.563 - 12 UNC - 3 THRU
.688 C BORE, .062
DEEP, FAR SIDE
3.093
O RING GROOVE
IN COVER
FWD
0°
AFT RING
FWD RING
NYLON INSERT
.375
SPHERICAL
RAD
.375
SPHERICAL
RAD
.330
.009
.070
1/4 - 20 UNC - 3
DETAIL A
SCALE 2/1
4°20'
5°30'
5°30'
4°
270°
30° TYP.
9°40'
C
.375
1/4 - 20 UNC
.250
.156
.031
14.680
2.908
2.247
14.910 D A
14.902
DIA
14.858
DIA
.250
.625
.281
O RING
SEAL
.125
45° CHAMFER
b
.500
2.250
3.000
5.125
VIEW A-A
VIEW C-C

2

RING

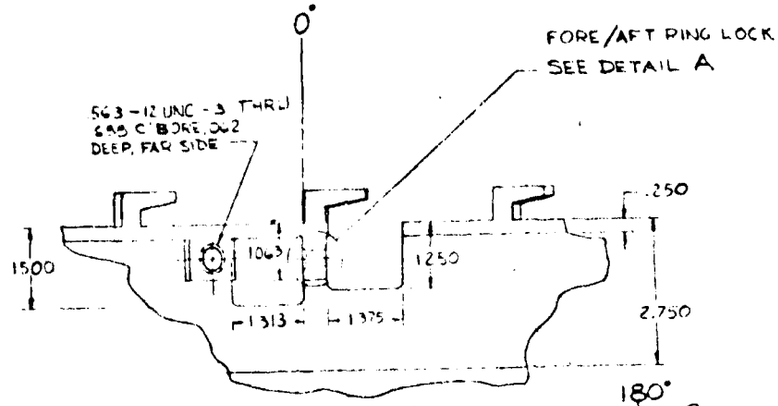

VIEW B-B

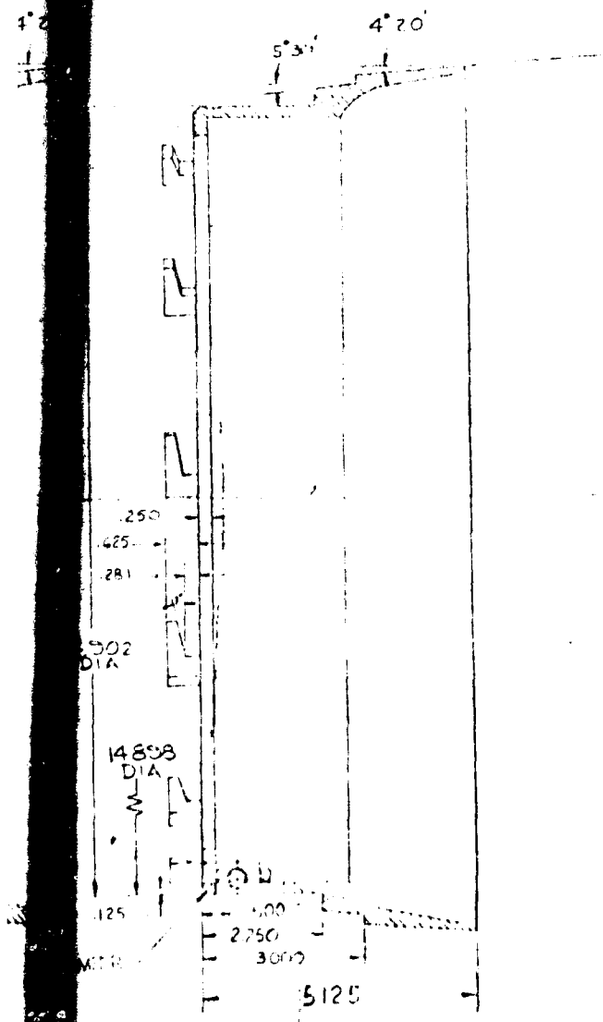

VIEW C-C

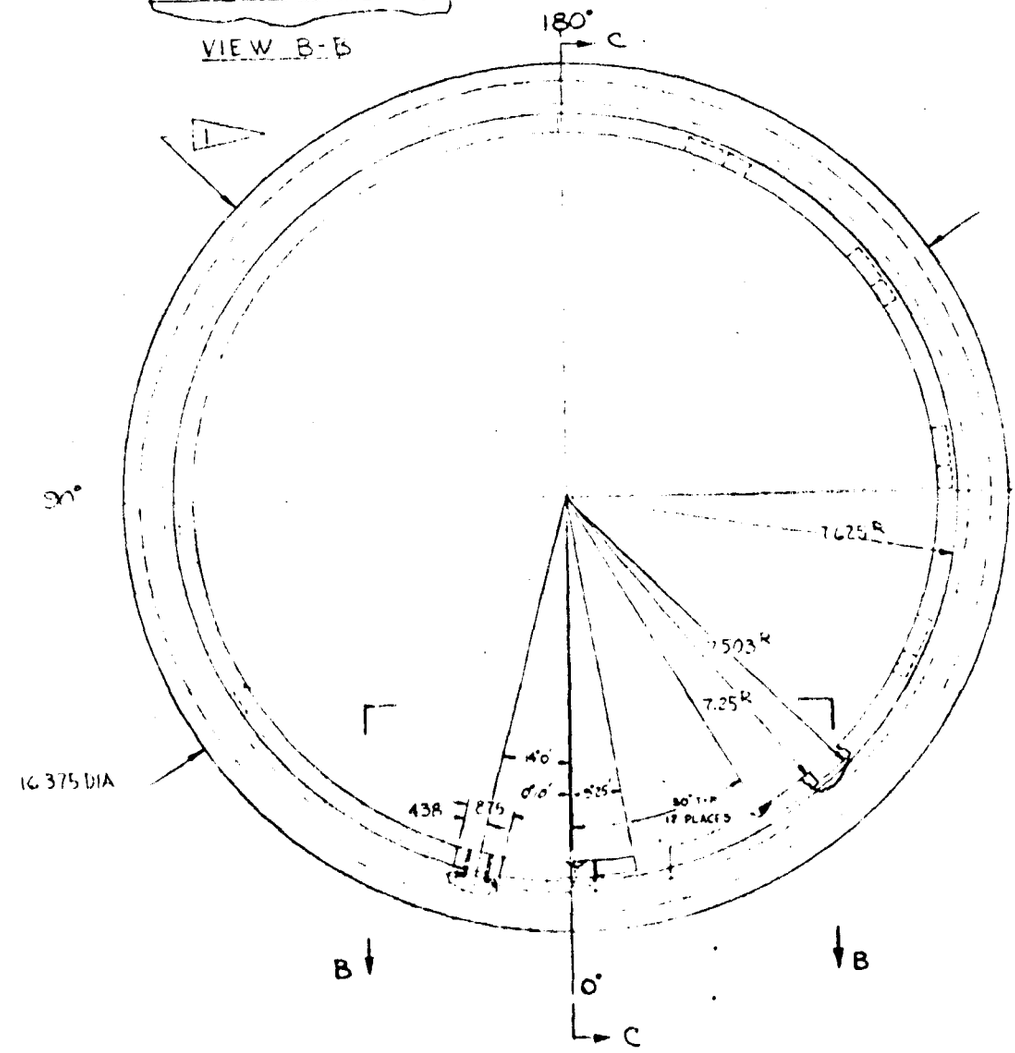

AFT RING

3

D2-125911-1

	MISSILE JOINT CONCEPT COMPENDIUM OF MISSILE JOINTS
	2-5167-0-201

SHEET 55

4

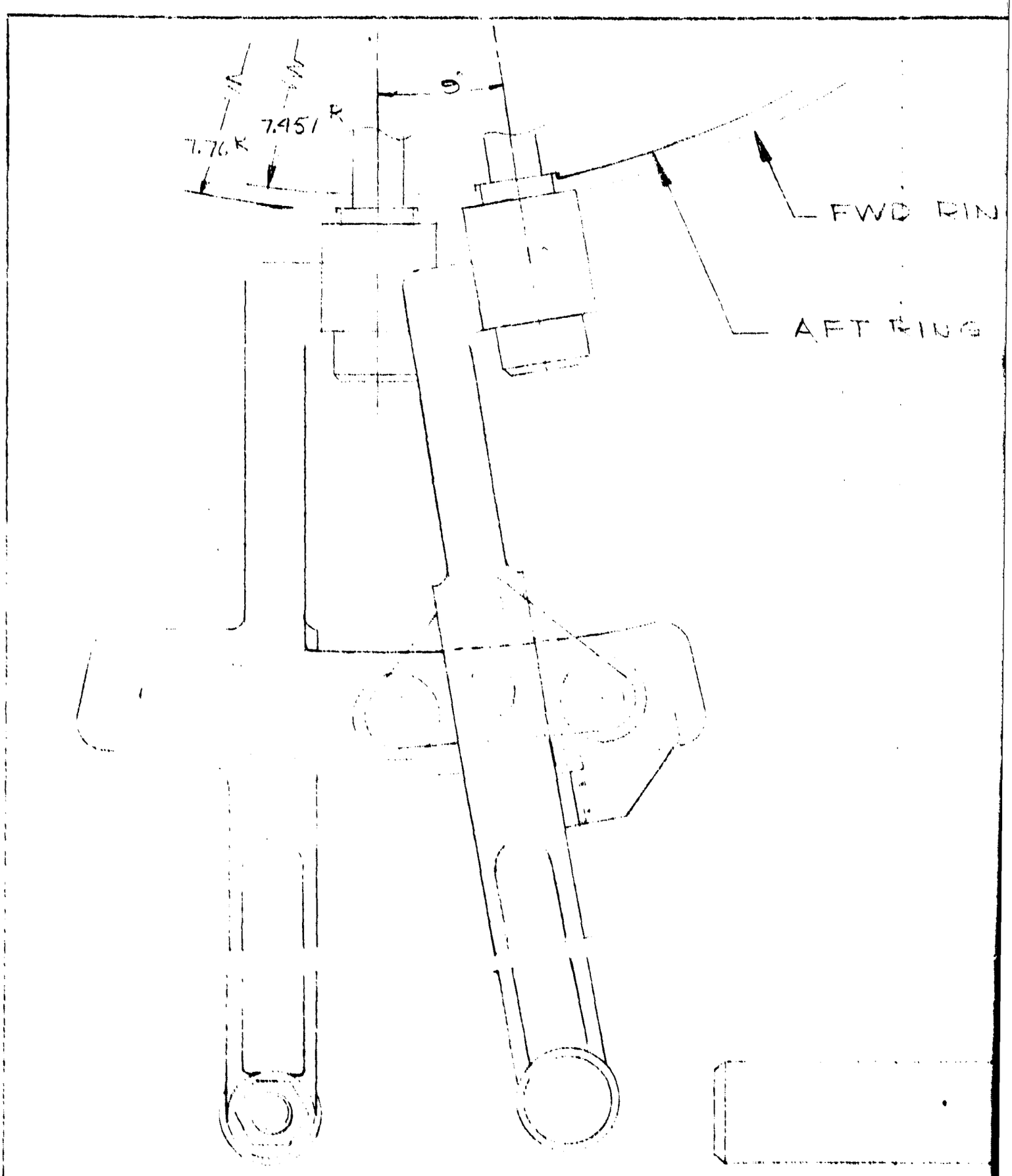

1

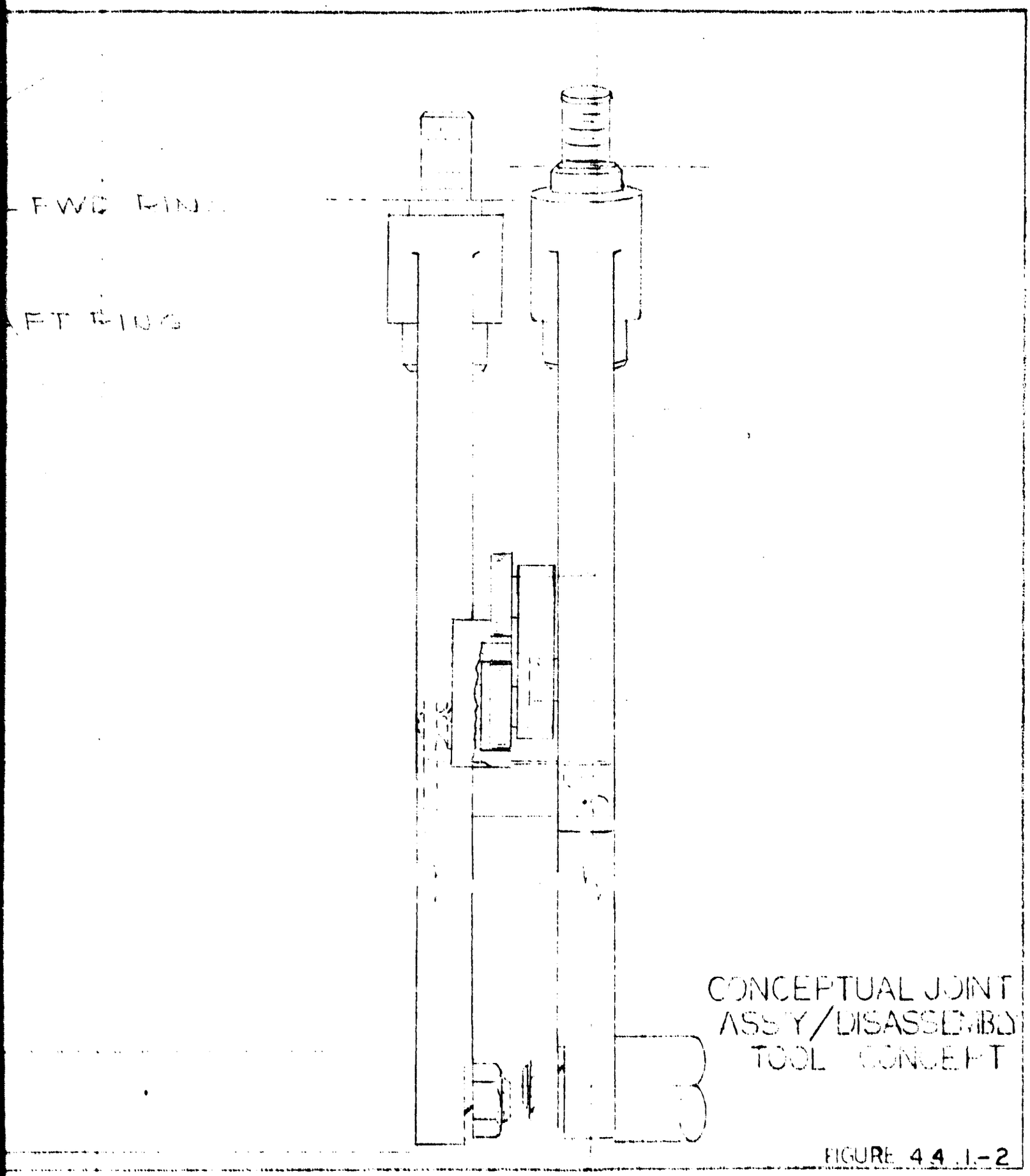

CONCEPTUAL JOINT ASSY/DISASSEMBLY TOOL CONCEPT

FIGURE 4.4.1-2

	CASE SEGMENT No.		
BASIC JOINT TYPE	PIN AND C		
TO JOIN	STEEL CASE		
JOINT VARIATION	STRAIGHT PIN U.T.C.	TAPERED PIN (With retaining ring) THION SLICK STEEL	TAPERED (Threa
	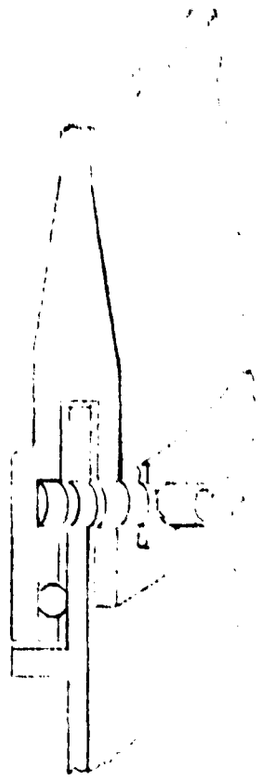	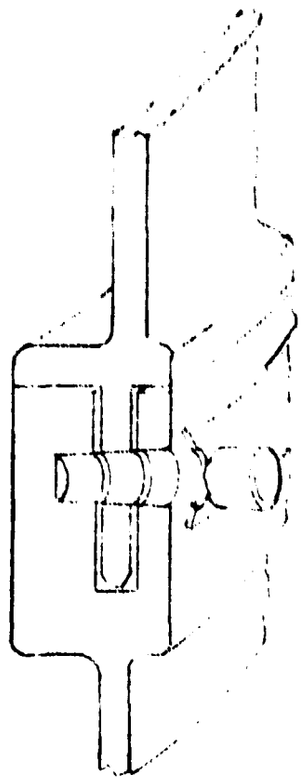	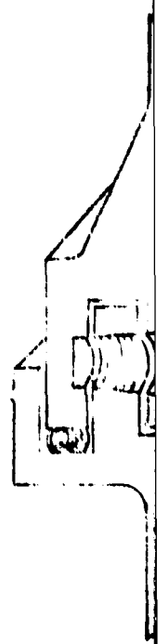
ARRANGEMENT No.	1	2	3

NOTE: The purpose of these early and preliminary joint arrangements is to provide examples for the trades exercise of this section. Their principal value as design concepts is probably that they illustrate features most to be avoided in joint design considerations. (See text.)

REV LTR _____

312 8000 REV. 2-65

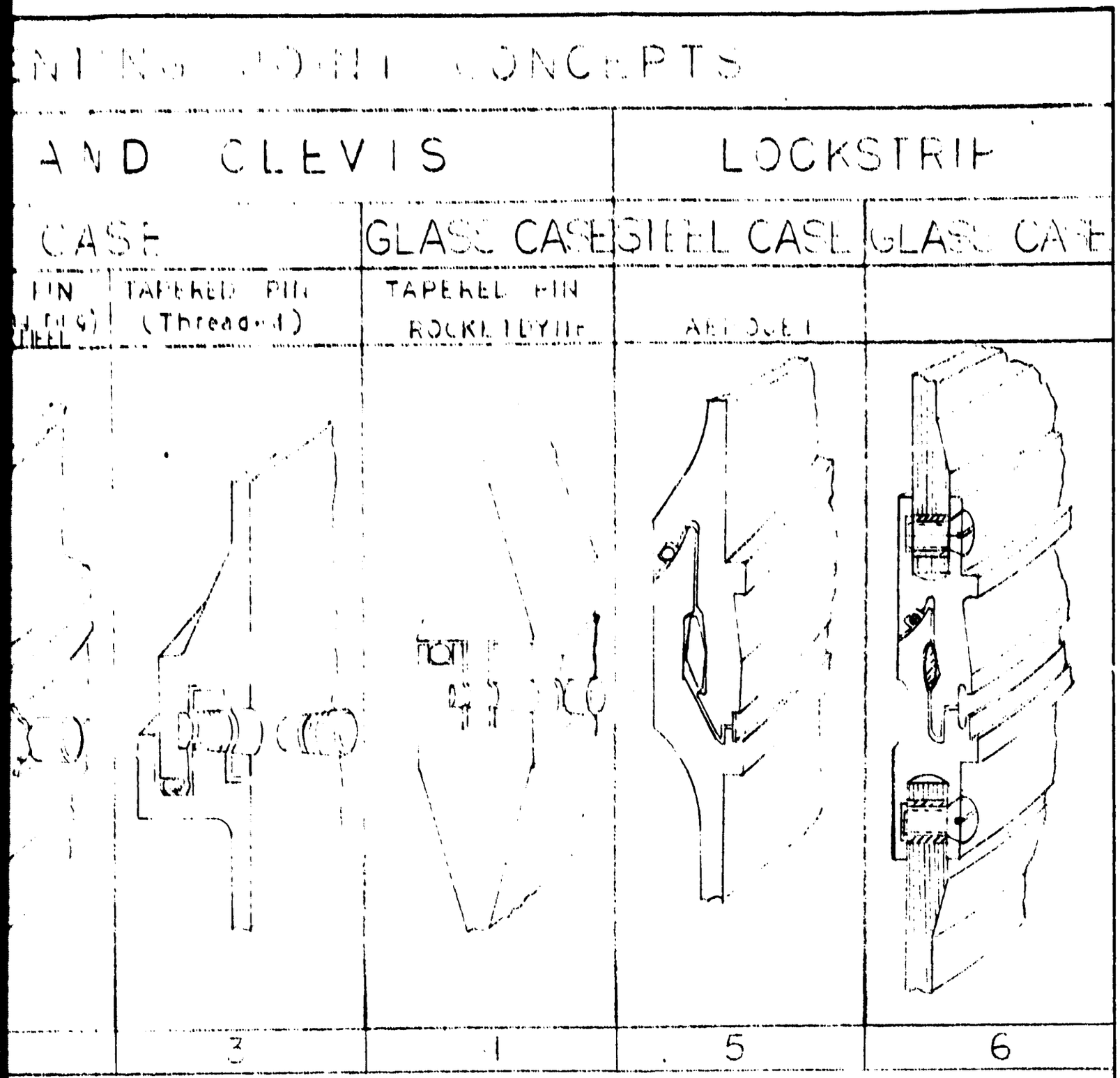
AND CLEVIS
LOCKSTRIP
CASE
GLASS CASE
STEEL CASE
GLASS CASE
TAPERED PIN
(Threaded)
TAPERED PIN
ROCKETDYNE
3
1
5
6

FIGURE 5.2.1.-1

4.4.1 (Continued)

by slots and holes in the respective rings which are then covered by a single plate which restores the external contour of the body shell. Tapped surfaces on each ring permit the assembly of a special tool (Reference Figure 4.4.1-2) required to assemble or disassemble the sections externally. The joint is fabricated from 4330 MOD steel, heat treated to 160,000 to 180,000 psi.

4.4.2 EVALUATION

The concept was submitted to Organization 2-5560 for a preliminary evaluation, the results of which are provided on the following page.

USE FOR TYPEWRITTEN MATERIAL ONLY

U3 4802 1434 REV. 8-65

COORDINATION SHEET

D2-125911-1

TO	R. V. Gambrell	2-5166	8K-51	NO. CS-ACMS-68-49
	W. R. Clark	2-5166	8K-51	ITEM NO.
CC	W. H. Jacaway	2-1630	82-26	DATE July 2, 1968
	T. P. Rona	2-1755	8C-82	MODEL

GROUP INDEX Air Carried Missiles - Structures

SUBJECT Structural Feasibility of Bayonet Missile Joint Concept

REFERENCE: (a) 2-5167-0-201 Missile Joint Concept Compendium of Missile Joints

In a preliminary qualitative structural evaluation of the missile joint concept of Ref. (a), the concept was found to be basically feasible from a structural point of view.

In the analysis of a typical missile joint application, the maximum stress in the joint was found to in the order of 40% higher than the maximum stress in a normal cylindrical section of the missile. Also, a missile with this joint compared to one without has approximately a 20% decrease in bending frequency.

A recommended change in the joint from a structural point of view is the elimination of all sharp corners to prevent local stress concentrations.

A more detailed stress analysis of this joint concept would depend on the specific configuration, weight distribution, and stiffness of the missile in which the joint is to be used. From this the mode shapes and frequencies could be found and, thus, the effect of the joint on dynamic loads, control interaction, and terminal guidance effectiveness could be determined.

Prepared by R. C. Lundquist

Approved by for S. I. Gravitz

U3 4084 5000 REV. 4/65

5.0 DESIGN CONSIDERATIONS

There are many design requirements and considerations which must be kept in mind when selecting a joint design for missiles. These are usually unique for each application but usually fall into one or more of the following categories:

(1) Ordnance Separation

(2) Raceways

(3) Sealing Joints

(4) Extraneous Requirements

(5) (To be added if necessary)

Each of these areas can be the subject of an entire document by itself. Consequently, no attempt is being made to tell a complete story. However, certain general information is useful for the design engineer to consider when making his selection and justifying its feasibility.

5.1 ORDNANCE SEPARATION

Information presented in this section is largely derived from the Boeing Research document D2-24013-1, Ordnance Components and Subsystems, Design Guide. This document should be referred to for additional details or expansion.

5.1.1 TYPICAL ORDNANCE TRAIN

Figure 5.1.1.-1 shows schematically an ordnance train used to stage an expended booster and remove the upper stage booster skirt. (Refer also to Figure 3-1). This figure also identifies some of the ordnance components involved. They are discussed in Section 5.1.2 and pictorially shown on Figure 5.1.1.-2.

USE FOR TYPEWRITTEN MATERIAL ONLY

STAGE SEPARATION AND SKIRT REMOVAL

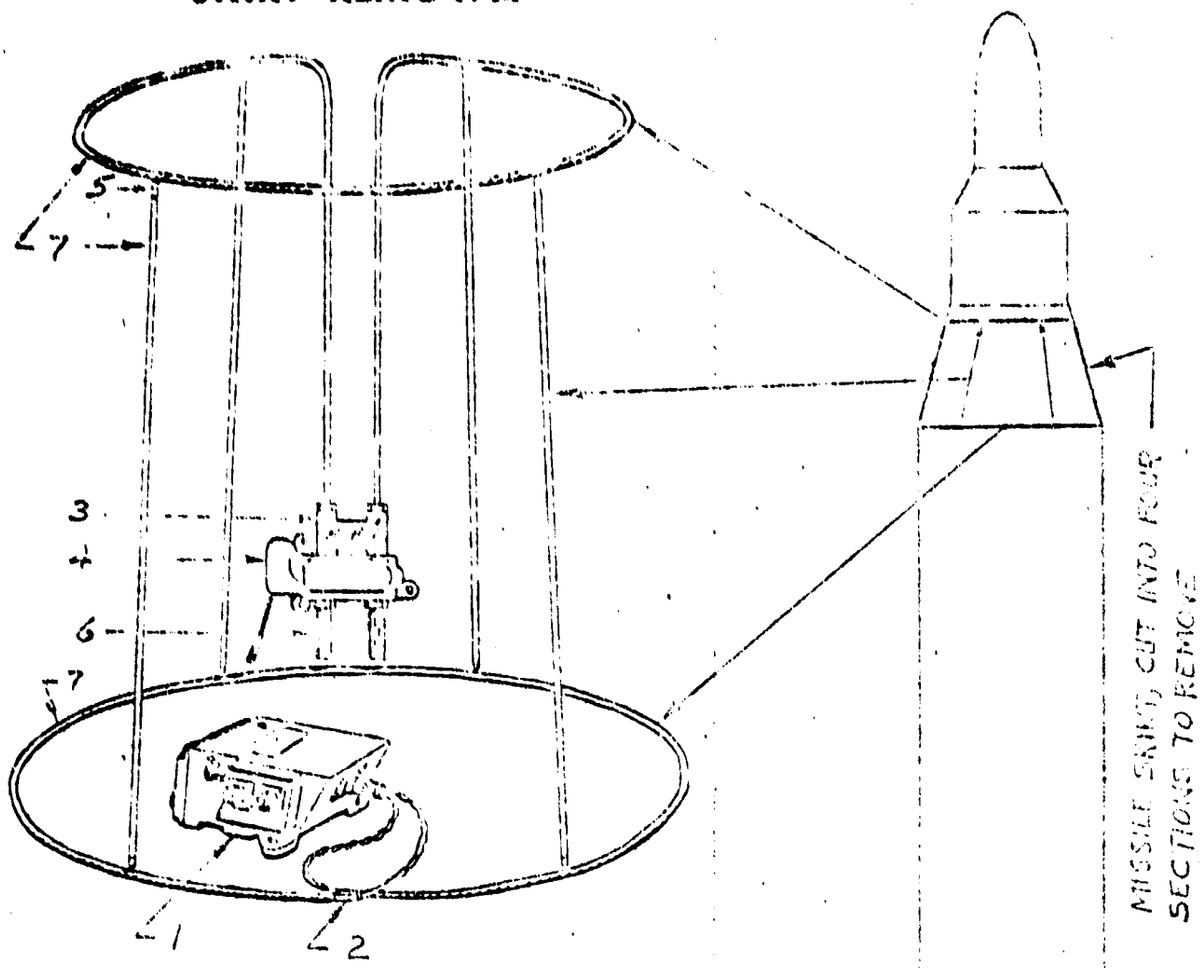

NOTE: FOR COMPONENT IDENTIFICATION SEE FIGURE 5.1.1-2

1. Safety and Arming Device
2. Detonator
3. Booster
4. Safety and Arming Device
5. Booster
6. Delay Booster
7. Linear Charge

FIGURE 5.1.1-1

STAGE SEPARATION AND SKIRT
REMOVAL COMPONENTS
(With Proven Reliability)

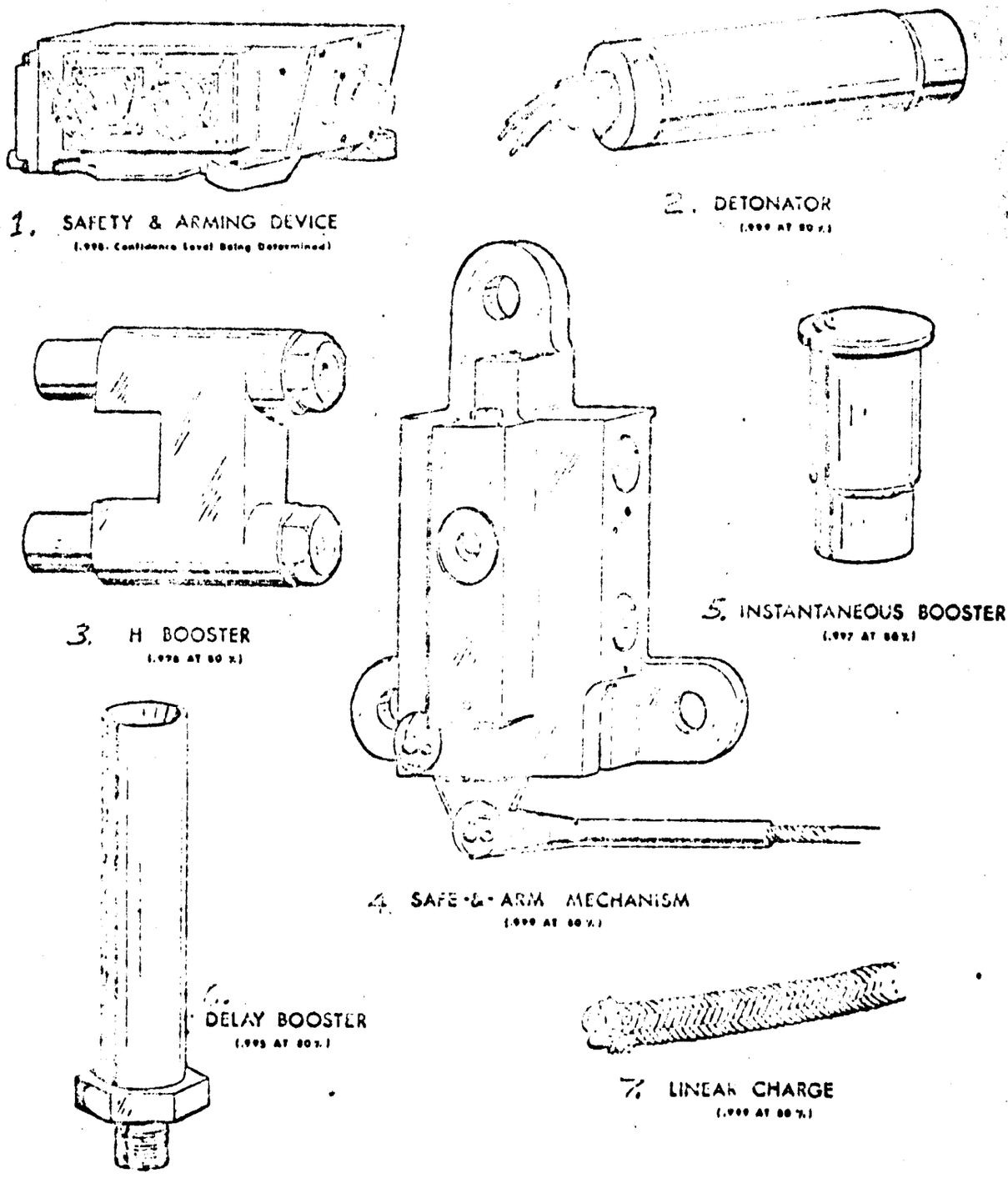

FIGURE 5.1.1-2

This train is a unique configuration for one application and is not meant to be universal. It gives an idea of the influencing factors involved in an ordnance separation joint design.

The sequence of events which take place in this particular design is as follows:

a. Electrical signal activates the Safe and Arm Device (1) which ignites the detonators (2).

b. The detonators (2) explode and ignite the linear charge (7).

c. The linear charge (7) explodes and stages the lower stage booster from the skirt.

d. As the lower stage pulls away, it pulls the lanyard on the Safe and Arm Device (4), arming it.

e. Safe and arm device (4) ignites the delay boosters (6).

f. After a delay period, the delay boosters (6) ignite the primary booster (3).

g. booster (3) explodes and ignites the linear charge (7).

h. The linear charge (7) explodes thereby igniting the boosters (5).

i. The boosters (5) ignite the charge (7) which explodes and breaks the skirt into four panels which are ejected by the force of the explosion.

USE FOR TYPEWRITTEN MATERIAL ONLY

U.S. 1401 474 REV. 8-64

5.1.2 TYPICAL ORDNANCE COMPONENTS

5.1.2.1 Safety and Arming Device

Description

The Safety and Arming (S & A) device is a mechanism which controls the make and break of continuity of electrical firing circuits and the make and break of continuity of the explosive train of an ordnance subsystem. One variation of this description is for a similar device containing no explosive or pyrotechnic material. Such a device has been identified as Safe and Arm Switch, Arm-Disarm Mechanism and Safety Switch, all performing the same function of make and break of electrical firing circuits.

Application

The S&A device is incorporated into an ordnance subsystems which, if inadvertently activated, would result in a catastrophic incident with possible loss of life and property.

The following represents a sampling of subsystems which normally do not require an S&A device.

a. Battery activation

b. Cartridge actuated devices (trapped piston)

c. Explosive valves

d. Explosive cable cutters

e. Explosive switches

The above noted subsystems are often referred to as "secondary" or "Class II" ordnance subsystems because the ordnance reaction is completely self contained when activated, (see Ref. f). Each subsystem must be evaluated individually for S&A requirement, however, since a feedback or chain reaction from an activated secondary subsystem can lead to a catastrophic incident.

The application of an S&A device to an ordnance subsystem should provide for the S&A installation into the main ordnance charge or provide for a low energy detonating cord connecting link. This will allow interruption of the explosive train within the S&A and assist in maintaining system safety.

In some cases, where direct installation of the S&A or connecting explosive link is not possible because of space or configuration restrictions, it is permissible to use an S&A device containing a firing lead output connector, located as close to the ordnance as possible. In this configuration, the ordnance initiating component, (squib or detonator) would be installed on the ordnance charge and

DB 4840 1434 OHIO, 4-65

[illegible] an S&A device or safe and arm [illegible] "[illegible] Mechanism", "Safe and Arm Switch" or "[illegible]".

[illegible] the design of [illegible] system [illegible], the indicated S&A characteristics should be evaluated for application to the particular missile:

a. Electrical arming

b. Inertial arming

c. Inertial arming

d. Lift-off arming

e. Electrical arming

f. Manual arming by insertion of a safety pin [illegible]

g. Manual arming by screw driver or special tool [illegible]

h. Pull out lock in safe position arming handle, (or arming pin) [illegible]

i. Mechanical safe & arm status indicator

j. Visual safe & arm status indicator [illegible]

k. Electrical [illegible]

l. Mechanical firing (impact or inertia)

m. No explosive or pyrotechnic [illegible] (use firing lead output connector)

n. Contains explosive or pyrotechnic material

o. Will power fire, current [illegible] in safe position (heavy duty load resistors across firing leads)

[illegible] Access required when S&A installed.

Typical Sources

Manufacturers with experience in design and development of S&A devices are noted below:

a. Quantic Industries, Pelmec Division

b. Bulova Watch Company

[illegible]

d. [illegible]

e. [illegible]

f. [illegible]

g. [illegible]

[illegible]

The [illegible] of the S&A device [illegible] be accomplished with due consideration for the reliability, [illegible] and safety of the [illegible] system. The use of [illegible] circuits [illegible] as to [illegible] and [illegible] and control and [illegible] [illegible] control and [illegible] [illegible] [illegible] [illegible] [illegible] (arming device), and which [illegible] the firing output signal shall be a third connector, [illegible].

[illegible] motor, [illegible] switch. The motor drive is preferred for [illegible] reliability.

Electrical [illegible] of several S&A devices can be accomplished in one of the following ways:

a. All [illegible] arm or safe together, prior to launch, by one switch.

b. Each S&A arm and safe individually prior to launch.

c. [illegible] S&A devices by programmed signal after launch.

Electrical monitoring of S&A status may be accomplished by using [illegible] or by monitoring each individually. The [illegible] pyrotechnically armed devices are not monitored after installation except to verify that they are in the safe position prior to launch.

Mechanical integration of the S&A device involves the mechanical attachment and, in the case of the S&A containing ordnance, the proper mating of the S&A ordnance output to the main explosive or propellant charge. Improper mating of the ordnance output could result in malfunction.

Electrically initiated ordnance components within the S&A device will meet the requirements of 5.1.2.4 , Initiators.

US 4807 1484 ORIG. 4-65

Table [illegible]

[illegible] for the explosive [illegible] should resolve [illegible] identity.

All [illegible] testing, [illegible] control, with the device [illegible] the test operator will [illegible] the test [illegible] area.

The testing [illegible] prior to installation, as [illegible] to the S&A configuration, is as follows (start with S&A in safe position):

a. Arming circuit resistance

b. Firing circuit resistance (shall read open circuit)

c. Safe monitor circuit resistance

d. Arm S&A (minimum voltage)

e. Time to arm

f. Arm monitor circuit resistance

g. Initiator [illegible] circuit resistance (for S&A devices equipped with a firing lead output connector, a special test plug is required)

h. Arming circuit resistance

i. Firing circuit resistance (shall read open circuit)

j. Safe S&A (minimum voltage)

k. Safe monitor circuit resistance

l. Arm S&A (maximum voltage)

m. Armed [illegible]

n. Initiator [illegible] firing circuit resistance (for S&A devices equipped with a firing lead output connector, a special test plug is required)

o. Safe S&A (manual safe)

p. Safe monitor circuit resistance

US ARMY 1454 ORIG. ARS

For lanyard operated S&A devices the following tests are normally conducted:

a. Arming force and travel

b. Initiator bridgewire firing circuit resistance

c. Safe S&A (reset or manual safe)

The S&A will not be tested after installation and connection to the electrical system. On the Minuteman program however, the firing circuit is checked after installation while the missile is in the launcher, with S&A devices in the safe position. This is accomplished with a load resistor across the firing leads within the S&A device.

Test Equipment

Electrical equipment used to test ordnance firing circuits shall be current limited to an output not to exceed 100 milliamperes for one second in order to avoid degrading the performance of initiating elements. Automatic cutoff should be considered if test current exceeds 10 milliamperes. For more detail information see 5.1.2.4, Initiators.

Safety

The S&A device may contain the following safety features to prevent inadvertent firing:

a. Break continuity of ordnance firing leads

b. Break continuity of ordnance train (ordnance incorporated)

c. Provide mechanical lock in safe position

d. Provide shunt across ordnance initiator firing leads when in the safe position

To assure the maximum in personnel safety, the following must be considered during handling, installation and checkout of S&A devices:

a. Shop personnel training and familiarization with the S&A devices.

b. Proper use of protective equipment during functional test.

c. Prohibit safing pin removal except during functional test in test area and when ready to launch.

U4 4802 1434 ORIG. 4-61

d. Prohibit arming of S&A device after installation except during launch countdown.

e. Conduct a firing lead hazardous current (no voltage) test prior to connecting firing lead to S&A device.

U3 4302 1434 ORIG. 4-65

5.1.2.2 Explosive Release Mechanisms

General

Explosive release mechanisms affect release of structural sections, panels, doors, pods, etc., by explosive or gas pressure failure of retaining hardware. The common release hardware used in explosive releases are explosive bolts, separation nuts (gas or explosive actuated), linear charge and linear shaped charge. The description of each type of release hardware, and common application of each type is noted below.

a. Explosive Bolt

1. Description

The explosive bolt is a special hollow bolt which is fractured by an internal explosive charge. The explosive charge is normally a high order detonation material either permanently loaded during manufacture or inserted later in the form of a cartridge. There are many different configurations of explosive bolts, most of which have considerable blast and fragmentation when actuated. A few manufacturers do state that their explosive bolt will operate with no blast or fragmentation.

2. Application

Explosive bolts are used to release tension and shear loads. The application to release tasks requiring simultaneous actuation of more than four release points is not recommended because of reliability penalties.

Design for explosive bolt application should include evaluation of load racing vs weight and envelope of the bolt, weight and envelope of structure and for shock and blast effects of the particular bolt being considered. Design for installation of explosive cartridge after bolt installation is complete.

3. Typical Sources

a. Beckman and Whitley Inc.

b. Holex Inc.

c. Teledyne Inc., McCormic Selph Division

d. Cartridge Actuated Devices Inc.

e. Precision Technology Inc.

f. Francis Associates Co., Francis Associates Ordnance Co.

U3 4612 1434 GRID, 4-65

g. Conax Corp.

h. Quantic Industries, Pelmec Division

i. Space Ordnance Systems Inc.

j. Omega Precision Inc.

k. Arlind Co., Arlind Components Inc. Division

l. Explosive Technology Inc.

m. Atlas Chemical Industries Inc., Ordnance Material Dept.

n. Olin Mathieson Chemical Corp., Winchester-Western Division

4. Subsystem

For information on the firing system, see 5.1.2.4, Initiators.

5. Test Methods

See 5.1.2.4, Initiators.

6. Test Equipment

See 5.1.2.4 , Initiators.

7. Safety

Design for installation of explosive or pressure cartridge after bolt installation. For initiator safety, see 5.1.2.4 , Initiators.

b. Separation Nut

1. Description

The separation nut is a special nut, designed for installation in a manner similar to a regular nut in structural joining except that it will release the load when actuated by an explosive or gas generator charge. In the preferred configuration the explosive or gas generator charge is contained in a separate component to be installed after the assembly operation is complete.

There are several configurations of release nuts ranging between the release of gas and fractured sections of the nut to those which release no gas or fractured sections when actuated. Each type will perform a satisfactory release.

NO 4802 1434 ORIG. 4-65

2. Application

The release nut must be used only to release tension loads. Clearance holes for the mating bolts are required to allow bolt pull-out when the release nut is actuated. Shear loads must be controlled by shear pins or similar means.

Those release nuts actuated by high order detonation will, in most cases, release some explosive blast to the surrounding area but are relatively free from harmful fragmentation. In one application such a device has been enclosed in a light weight container and qualified for use in an explosive atmosphere. Release nuts actuated by gas pressure will release very little, if any, gas and will generate no shock.

Release nuts will normally be load rated in accordance with the load rating of the mating standard bolt.

Release nut application to release tasks which require simultaneous actuation of more than four points is not recommended because of reliability penalties.

3. Typical Sources

a. Hi-Shear Corp.

b. Quantic Industries, Pelmec Division

c. Holex Inc.

d. E. I. DuPont DeNemours & Co.

e. Space Ordnance Systems Inc.

f. Conax Corp.

g. The Boeing Company

h. Omega Precision Inc.

4. Subsystem

For information concerning the firing subsystem see 5.1.2.4, Initiators.

5. Test Methods

See 5.1.2.4, Initiators.

6. Test Equipment

See 5.1.2.4, Initiators.

US 4502 1434 ONIC. 4-65

7. Safety

Design for installation of cartridge after hot installation. For initiator safety see 5.1.2.4, Initiators.

c. Linear Charge

1. Description

Linear charges are relatively lightly loaded, continuous, explosive charges encased in metallic or plastic tubular containers. The linear charge is also known as Mild Detonating Fuse (MDF), Prima Cord, and Low Energy Detonating Cord (LEDC). The explosive specified for most installations is lead or aluminum encased RDX or PETN because of high reliability, low cost, temperature tolerance, safety and a high detonation velocity with resultant high energy shock wave release.

2. Application

Linear explosive is used to rupture structural fittings for separation of missile sections and for propagation of detonation from one point to another in an explosive subsystem. RDX explosive has been qualified for use at altitudes above 100,000 feet in the Minuteman stage separation system. There has been no work done, however, to verify performance of any linear explosive after long exposure, (up to one year), to space environments. The application of explosives to any task, while exposed to cryogenic temperature, may cause extreme performance variation, see reference d.

3. Typical Sources

a. The Ensign-Bickford Co.

b. Explosive Technology Inc.

c. E. I. DuPont DeNemours Co.

4. Subsystem

Linear explosive application to such tasks as stage separation or panel ejection must be properly integrated with structure and surrounding equipment. Consider such parameters as shock, fragmentation, explosive blast and the ejection of separated sections.

US 480/ 1434 ORIG. 4-60

The following is a first cut equation for determining an explosive loading required to rupture a Minuteman type joint. This equation contains three potential variables; explosive quantity, cavity size and fitting strength. The final sizing of explosive load and structural compatibility can only be determined by development testing.

$$5P = \frac{(H_E)\ (2.39)\ (W)}{V} :$$

where P = Pressure to rupture explosive cavity (PSI)

H_E = Heat of explosion (H_E of RDX = 1280 Cal/gm)

W = Explosive weight per foot of joint (grains)

V = Volume of explosive cavity (cubic inches per foot of joint)

2.39 = Conversion constant

The linear charge may be installed into a Minuteman type joint after completion of structure assembly through access panels. Care must be exercised to avoid sharp bends and corners in the explosive installation. Design to avoid difficult installation procedures to minimize explosive handling which could result in kinks or other physical damage to the explosive.

The linear charge is detonated by a detonator most ideally located to fire into the end of the explosive core of the charge.

5. Test Methods

The only testing possible on linear charge is x-ray inspection of explosive core size, a laboratory test of core loading and an explosive output test. The laboratory and output test are both destructive in nature and will give only an indication of the explosive loading of the sample, uniformity of explosive loading can be verified only by destruction and measurement of the total length. X-ray or Gamma Ray inspection of linear charge shall be accomplished only by authorized operators in an approved location. The inspection will verify continuity of the explosive cavity, the presense of explosive can not be verified.

U3 4602 1434 ORIG. 4-66

Laboratory analysis of linear charge will require many short samples (1 to 3 inches long) taken at regular intervals throughout the total linear charge length. The short lengths are weighed individually then submerged in the proper solution to dissolve the explosive from the encasement material. The encasement material is then weighed and the weight difference is recorded as the weight of explosive removed.

The explosive gauge is a precision tubular device which has been developed to rupture and open to a given dimensional range when a length of linear charge of proper explosive load is detonated within the tube. The measurement of the ruptured gauge is the indication of explosive output.

The x-ray and laboratory test will normally be accomplished by the linear charge manufacturer. The gauge test may be used as an acceptance test, using a sample length of linear charge from each end of a production length.

6. Test Equipment

X-ray and laboratory equipment should be specified by the explosive charge manufacturer. The explosive output gauge, if required, will be developed by the linear charge consumer to be compatible with the explosive output required. For a sample gauge, see Boeing Drawing 29-15150 which is used to measure the output of the Minuteman stage separation linear charge.

7. Safety

All handling and testing of linear charge will be accomplished in accordance with standard explosive handling procedures. Testing will be accomplished only in approved isolated areas. (See reference b & f).

d. Linear Shaped Charge

1. Description **(Ref. FIGURE 5.1.2.2-1)**

Linear shaped charges are similar to item Linear Charge, except that the cross section is shaped to focus a high energy stream in a predetermined direction to produce a cutting action. The linear shaped charge is also known as "Flexible Linear Shaped Charge (FLSC)".

2. Application

Linear shaped charge (FLSC) is used to cut a structural material for vehicle destruction and to separate sections from a vehicle. The explosive cutting performance is predictable for any of the common explosive loads except at cryogenic temperatures. (For

U3 4032 1434 SHEG. 4-65

PRODUCT DATA SHEET

RDX #25 LEAD CONFIGURATION IV FLSC

REFERENCE

E.-B. CO. DRAWING	2-B-27
E.-B. CO. SPECIFICATION	T-007-00

CONSTRUCTION

SHEATH	6% ANTIMONIAL LEAD (±0.5% Sb)
CORE	RDX (MIL-R-398) 25 GR/FT ±10%
GROSS WT.	20.2 GM/FT; 44.6#/1000 FT

AVAILABILITY: MANUFACTURED IN 40 FT. LENGTHS AND SHIPPED IN STRAIGHT LENGTHS OF UP TO 20 FT.

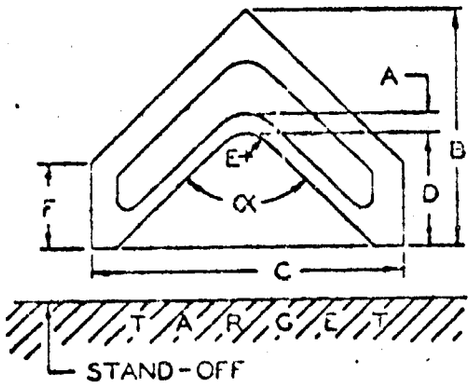

DIMENSIONS

A	0.007" MINIMUM
B	0.148" ±0.003"
C	0.196" ±0.006"
D	0.069" ±0.007"
E	0.012" MINIMUM
F	0.054" REFERENCE
α	92.5° ±6°

NOTE: RADIUS OF ALL SHARP CORNERS IS LESS THAN .002

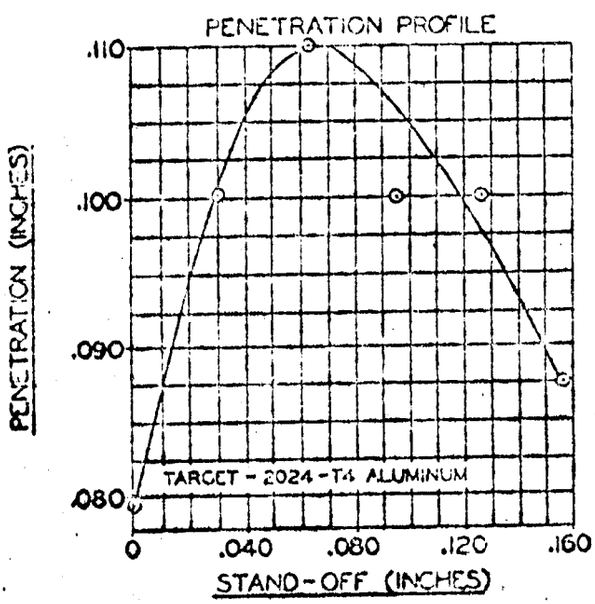

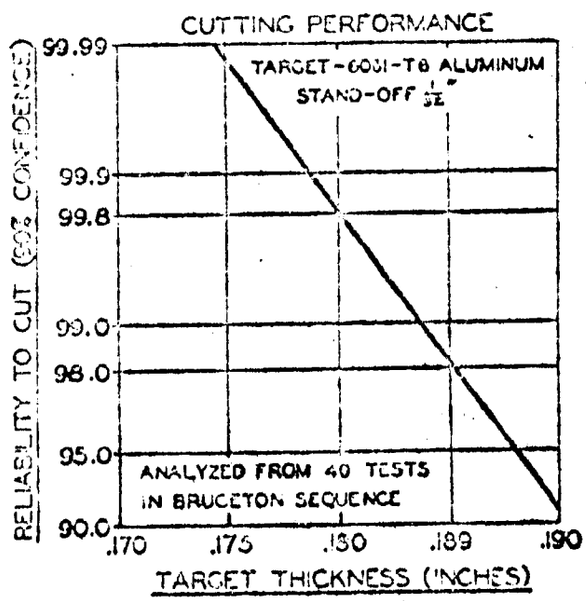

THE ENSIGN-BICKFORD CO.
SIMSBURY, CONN.

FIGURE 5.1.2.2-1

[illegible] explosive or cryogenic [illegible])

The installation of [illegible] is most often accomplished during structural [illegible] because of the requirement for accurate location and [illegible]. The structures of the explosive installation must also be considered in explosive component and will require special restraint [illegible] during storage and shipping.

The application of [illegible] in relatively light loads, less than 10 grains of explosive per foot, to accomplish structural separation should be evaluated carefully. In many cases, a linear charge (see Item 4) of the same explosive load can be applied in a Mineteam type joint without the physical complications of installing FLSC.

One common application of FLSC is the destruction of missile propulsion units, both liquid and solid fueled. In this application a dual (redundant) system is used, each side independent and separated from the other except for crossover charges. Another common application is the separation of expended missile stages or sections from the active stages to reduce weight.

3. Typical Suppliers

a. The Ensign-Bickford Co.

b. Jet Research Center Inc.

c. Explosive Technology Inc.

4. Sub-system

The application of FLSC to the cutting of structure for separation or missile destruct will be aided by consulting the manufacturer's data. The cutting function of the installation should be verified by test and back blast effects, if important, should be evaluated. (The blast protection may in some cases be minimized by attenuating the jet stream after cutting is complete instead of attempting to control the back blast.)

5. Test Methods

Development testing only.

6. Test Equipment

As required to support development.

US 48 X 1434 ORIG. 4-65

7. [illegible]

MSC will be handled and installed in accordance with general operating procedures for explosives as supplemented by specific procedures for the pressure system. (See Reference b.)

US 4802 1434 ORIG. 4-63

5.1.2.3 Boosters

Description

The booster is an augmenting explosive or pyrotechnic component of moderate sensitivity, which is used in the explosive or pyrotechnic train to step-up the energy output of the primary material to initiate the comparatively insensitive main charge. The booster may be in the form of pressed pellets or in shaped containers as required by a particular system, see page 63 for additional example.

Application

Boosters will be applied to the initiation train of explosive components to step-up the detonation rate and energy release of the initiating or donner component to a level required to detonate the base charge or receiver component of an explosive train.

Boosters may also be applied to the initiation train of a gas generator or solid propellant motor to step-up the release of hot gases and burning particles into the main charge for more rapid build up of main charge gas pressure.

In both of the above systems, the booster may be incorporated only to reduce the total quantity of sensitive, primary explosive in the initiation components.

In the development of new explosive or gas generating systems, it is often possible to use an off-the-shelf booster in the initiating train. This must be done, however, with full cooperation of the booster manufacturer since an incorrect selection could compromise system performance.

Typical Co[illegible]

a. E. I. DuPont DeNemours & Co.

b. Hercules Powder Co.

c. Universal Match Co.

d. Jet Research Center Inc.

Subsystem

Incorporating a booster into a subsystem requires that it be sensitive enough to be initiated by the initiator or donner and provide the correct output for initiating the next step of the initiating train. There is no firm ground rule for applying a booster to an initiation train, it is dependent on the explosive or propellant material and configuration. Each subsystem requirement will be determined during development.

US 4603 1414 ORIG. 4-65

Test Method

Tested only during development and acceptance sampling in conjunction with the initiator or donor and the main charge or receiver.

Test Equipment

Simulated system, pressure chamber, pressure and time instrumentation.

Safety

Use normal handling procedures in accordance with reference b and special procedures required for the particular system.

U.S. 4802-1424 ORIG. 4-65

5.1.2.4 Initiators

Description

An initiator is the first component in an ordnance train. It is activated by electrical or mechanical means, or pressure or mechanical means to start the chain of events which results in ignition or detonation of the main charge. The term "initiator" is also used to identify some components in a seat ejection system which may not be the first units fired, however, the function is basically the same as noted above.

Initiators are identified by the following common names:

a. Detonator - An initiator loaded with a high order detonation material to initiate detonation in an explosive charge.

b. Squib - An initiator loaded with a flame and gas producing material to ignite deflagration type devices such as gas generators and rocket motor igniters. The term "squib" is also a colloquial term used conversationally by some people to identify any initiating device or small pressure cartridge. (This use creates some confusion.)

c. Primer - Nomenclature used by some organizations for electrical or mechanical fired initiators which accomplish the same functions described in 1 and 2 above.

There are two basic types of electrically fired initiators, the conventional hot wire and the explosive bridge wire (EBW) types. The appearance and function of each type are quite similar, however, the control subsystems differ considerably.

Application

An initiator is used to start every detonating or deflagrating function. It may be permanently assembled in the pyrotechnic or explosive train (such as a primer in a rifle cartridge) or preferably designed for installation after the remainder of the subsystem has been installed or assembled.

Every precaution should be taken to preclude the chance of a mixup between detonating and deflagrating type initiators in any installation. The two functions are not interchangeable and will probably result in a malfunction if improperly applied.

The application of initiators to systems that will be exposed to space environments for long periods prior to actuation, can only be accomplished with some risk. There has been no testing accomplished to verify explosive or propellant performance after such exposure.

US ARC 1434 OHIO, 4-68

Typical Sources

a. Talley Industries

b. Beckman & Whitley Inc.

c. Quantic Industries Inc., Pulsar Division

d. Molex Inc.

e. Teledyne Inc., McCormic Selph Division

f. Ordnance Engineering Associates Inc.

g. Cartridge Actuated Devices Inc.

h. Hercules Powder Co.

i. Hi-Shear Corp.

j. Special Devices Inc.

k. Explosive Technology Inc.

l. Frankford Arsenal

m. Precision Technology Inc.

n. Aircraft Armaments Inc.

o. Universal Match Corp., Unidynamics Div.

p. Atlantic Research Corp., U. S. Flare Div.

q. Space Ordnance Systems Inc.

r. Arlind Co., Arlind Components Inc. Division

s. Olin Mathieson Chemical Corp., Winchester-Western Division

t. General Precision Inc., Link Ordnance Div.

u. Atlas Chemical Industries, Inc., Ordnance Material Dept.

Subsystem

The firing of detonating or deflagrating initiators may be accomplished in the same basic subsystem. Mechanical or electrical initiation may be applied; the mechanical approach utilizing a percussion primer with a lanyard or gas triggered firing pin, is used mostly on crew escape systems. Other applications will most often use electrical initiation because of reduced sensitivity to environmental conditions.

U3 4802 F434 ORIG. 4-65

Electrically fired initiators are normally incorporated into a subsystem in such a manner that double redundancy is achieved. The redundancy most often includes dual sources of power, dual switching, dual wiring and dual bridgewires. The dual bridgewires may be incorporated as two bridgewires in one initiator or two, single bridgewire initiators. In the case of two single bridgewire initiators, either initiator must be capable of performing the complete function.

The following data represents conventional initiator electrical characteristics considered to be acceptable by most customer agencies, (see reference e and f). These characteristics will assure a reasonable level of safety and reliability. For information on procedures for statistical analysis of performance parameters of initiators, see Reference e.

a. The initiator shall not fire, nor shall performance be degraded, by the application of 1 ampere/1 watt power to the bridgewire circuit for 5 minutes.

b. The initiator shall not fire when an electro-static discharge of 25,000 volts is applied between the bridgewire circuits and the initiator case from a 500 micro-microfarad capacitor.

c. The resistance between the bridgewire circuit and case shall be 50 megohms minimum when measured with a potential of 1000 volts ac or 500 volts dc.

d. Minimum recommended firing current shall be 5 amperes.

e. Initiator time to fire shall be specified in accordance with system requirements, (common time to fire: - for detonators, less than 5 milliseconds; for gas generator time to pressure rise less than 20 milliseconds).

f. Initiator firing systems shall be full floating (2 wire) systems, (chasis return paths shall not be used).

Initiators shown as examples which do not meet these requirements are presented as envelope samples only, performance can be varied to meet requirements.

For complete details of both conventional and exploding bridgewire (EBW) firing systems, see Reference a.

Test Methods

The initiators shall be tested for bridgewire resistance prior to making final connection to the firing system. The test shall be accomplished with the initiator installed in a protective chamber to prevent a catastrophic reaction or injury to personnel in case of inadvertent firing.

US 4802 (434 ORIG. 4-65)

In addition to the bridgewire resistance test on the initiator, the initiator firing system will be tested manually prior to connection to the initiator, to verify that no extraneous voltage is present. The test will check each wire in the connector against every other wire and the shield.

Test Equipment

Test equipment required is as follows:

a. A protective chamber to control the effects of inadvertent initiation.

b. A resistance meter with a power supply short circuit output of less than 100 milliamps and a test set direct output of less than 10 milliamperes. Certification for use on ordnance components will be required. (See Boeing meter 10-20944 or equivalent.)

c. A low impedance AC-DC voltage meter capable of detecting and indicating voltage within the equivalent range of 5 to 150 milliamps within the frequency range of 0 to 15 kilocycles. A gross indication (circuit breaker, light, etc.) of voltage above this level is recommended. (See Boeing meter 10-20994, and Boeing Wichita meter F 310135, or equivalent.)

Safety

a. Handling, testing and installation will be accomplished in accordance with **referance b** and any specific procedures required for the particular system.

b. A protective chamber will be used during electrical testing.

c. Bridgewire resistance measurement, except EBW initiators, will be accomplished only with current limited test equipment approved for use on ordnance components. (The bridgewire resistance measurement may not be possible on EBW initiator circuits.)

d. The electrical firing leads will be checked to verify that no extraneous voltage is present, prior to connecting to initiators.

e. A shorting plug will be installed on all initiator firing lead connectors, or firing lead wires will be twisted together on initiators not equipped with connectors, at all times during shipping, storage and installation. (EBW initiators do not require a shorting plug.)

U3 4803 1434 ORIG. 3-65

5.1.2.5 LIST OF REFERENCES

a. D2-24052-1 Electro-Explosive Initiation Systems, Design Guide Lines

b. AFM 127-100 Explosives Safety Manual (Air Force Manual)

c. ORDP 20-270 Propellant Actuated Devices (Library File No. U85 P 20-270)

d. T5-6025 Test Report, Explosive Performance in Extreme Cold (Saturn

e. MIL-1-23659 (U. S. NAVY - BU-WEAP) Initiators, Electric, Design and Evaluation of

f. AFETRP 80-2 General Range Safety Plan (Air Force Eastern Test Range Pamphlet)

USE FOR TYPEWRITTEN MATERIAL ONLY

U3 4502 1434 REV. 8-67

5.2 JOINT TRADES EXERCISE

Frequently the designer is faced with the selection of a joint concept from a number of available alternatives. The use of a manufacturing approach to make the decision is demonstrated by the following example which uses case segmented joint concepts developed in the Minuteman Program.

5.2.1 MANUFACTURING CONSIDERATIONS

The six joints shown on Figure 5.2.1-1 have been evaluated on the basis of producibility in terms of fabrication time and the relative importance of the two. All joints are considered to be interchangeable and ultimately producible.

5.2.1.1 SUMMARY

Of the joint concepts considered, the taper pin and clevis joint has been selected as being the most desirable in terms of procibility. The joint requires more installation effort than some of the others, however, the findings indicated that initial fabrication time far outweighed field assembly time for the program concept of which this study was a part.

The primary advantage of the taper pin and clevis joint design concept is that it somewhat relieves the requirement for close hole alignment that most other designs require. This, of course, reduces part fabrication.

5.2.1.2 DESCRIPTION

5.2.1.2.1 STRAIGHT PIN JOINT

Joint Concept No. 1, the clevis and straight shear pin, would require both the highest fabrication time and the highest assembly time of all the joints examined. The reasons for this are the extraordinary dimensional tolerances that would have to be maintained in making the rings, and the level of alignment precision required in the joining operation. The joint is unlike the present Minuteman joint in that the fasteners carry the compression load. This requires that there be a close (Class I) fit between pin and matching holes. The joint is

U3 4800 1434 ORIG. 4-65

	PTS	
BASIC JOINT TY	LOCKSTRIP	
TO JOIN	STEEL CASE	GLASS CASE
JOINT VARIATIC	ARROWE I	

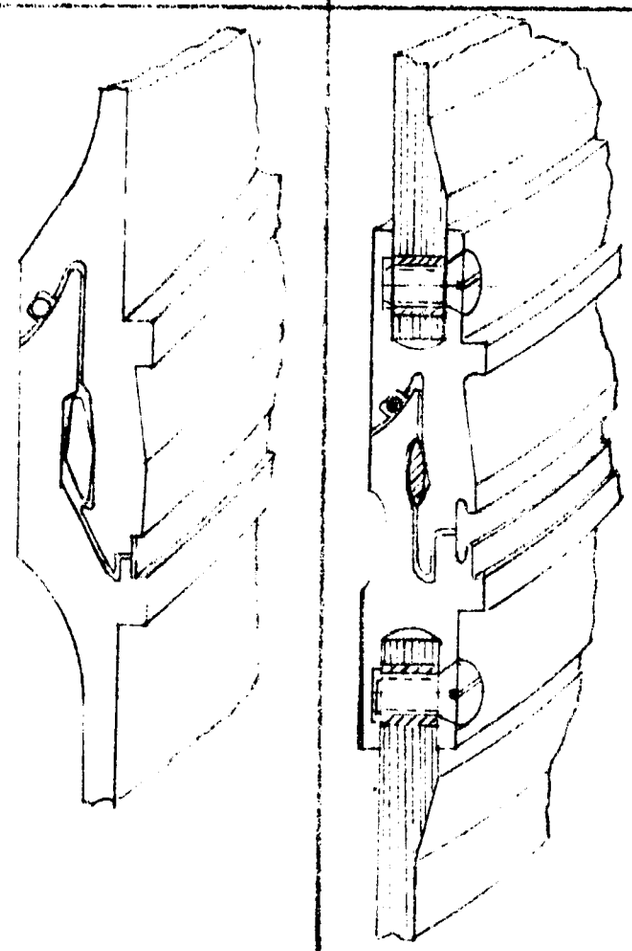

ARRANGEMENT N	5	6

NOTE: The purpose of these is to provide examp Their principal valu illustrate features m (See text.)

FIGURE 5.2.1.-1

REV LTR _____

BOEING NO. D2-125911-1

SH 86

US 4312 8000 REV. 2-65

	CASE SEGMENTING		
BASIC JOINT TYPE	PIN AND		
TO JOIN	STEEL CASE		
JOINT VARIATIONS	STRAIGHT PIN U.T.C.	TAPERED PIN (With retaining ring) THION LOCKTITE	TAPERE (Thre
	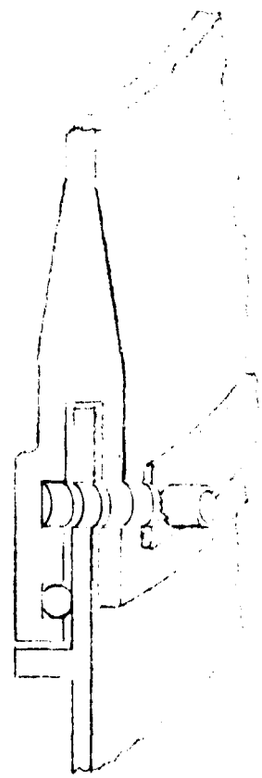	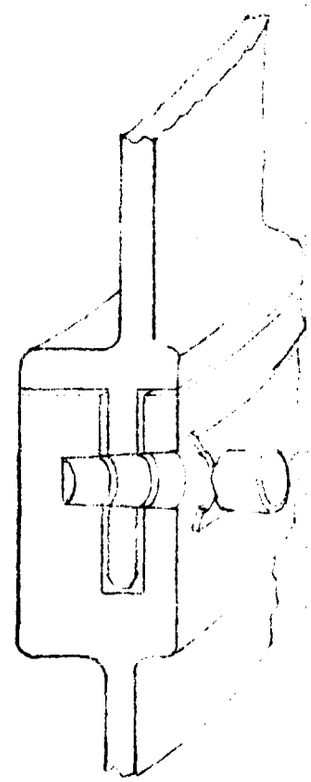	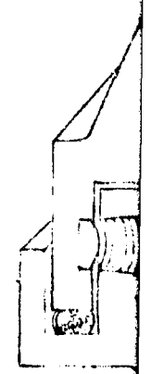
ARRANGEMENT No.	1	2	

NOTE: The purpose of these early and preliminary joint arrangements is to provide examples for the trades exercise of this section. Their principal value as design concepts is probably that they illustrate features most to be avoided in joint design considerations. (See text.)

REV LTR _____

US 4312 8000 REV. 2-64

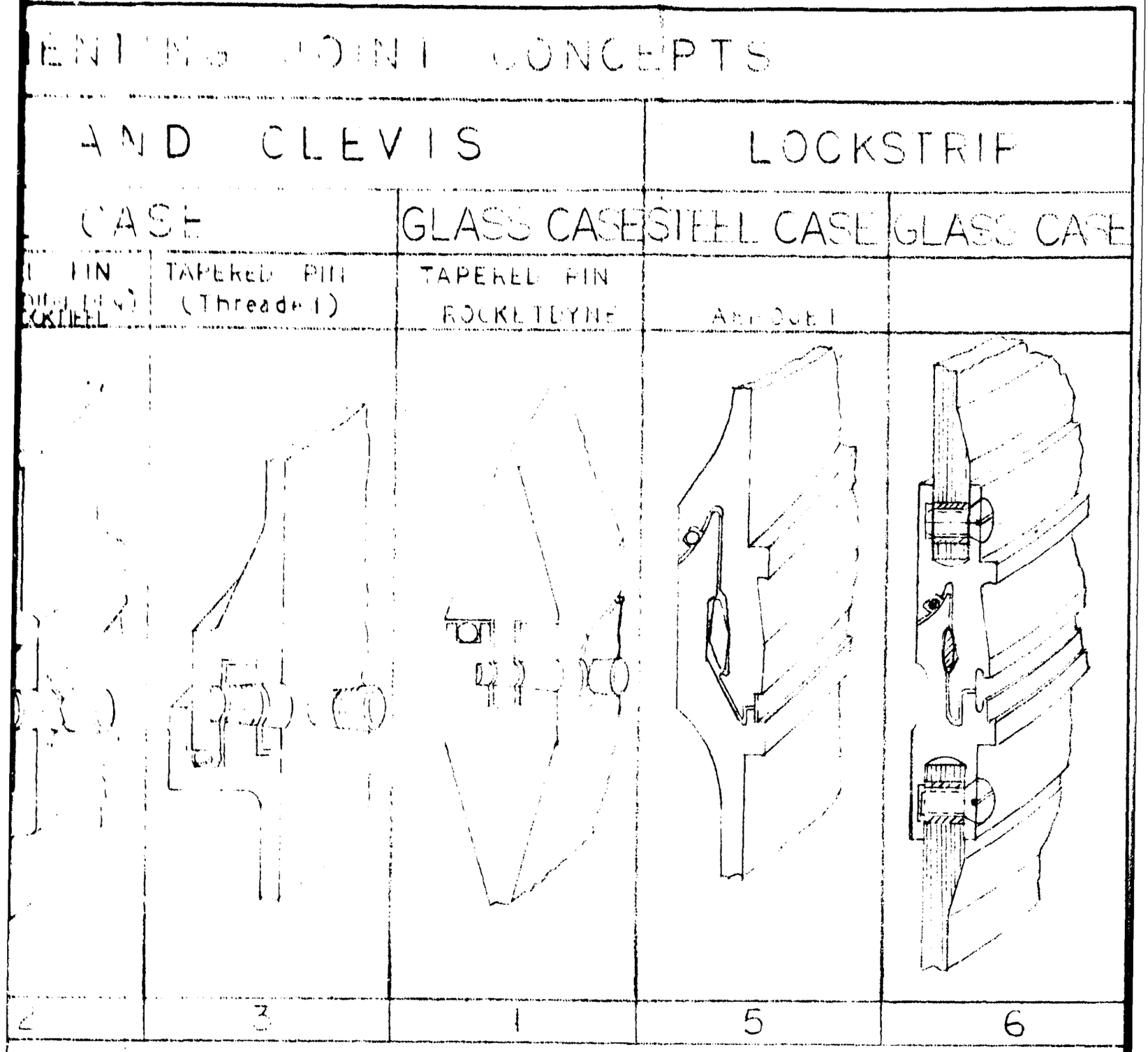
ENTING JOINT CONCEPTS
AND CLEVIS
LOCKSTRIP
CASE
GLASS CASE
STEEL CASE
GLASS CASE
TAPERED PIN
(Threaded)
TAPERED PIN
ROCKETDYNE
2
3
1
5
6

FIGURE 5.2.1.-1

ENTING JOINT CONCEPTS

AND CLEVIS			LOCKSTRIP	
CASE		GLASS CASE	STEEL CASE	GLASS CASE
D PIN (ring ring) OCKTIEL	TAPERED PIN (Threaded)	TAPERED PIN ROCKETDYNE	AEROJET	
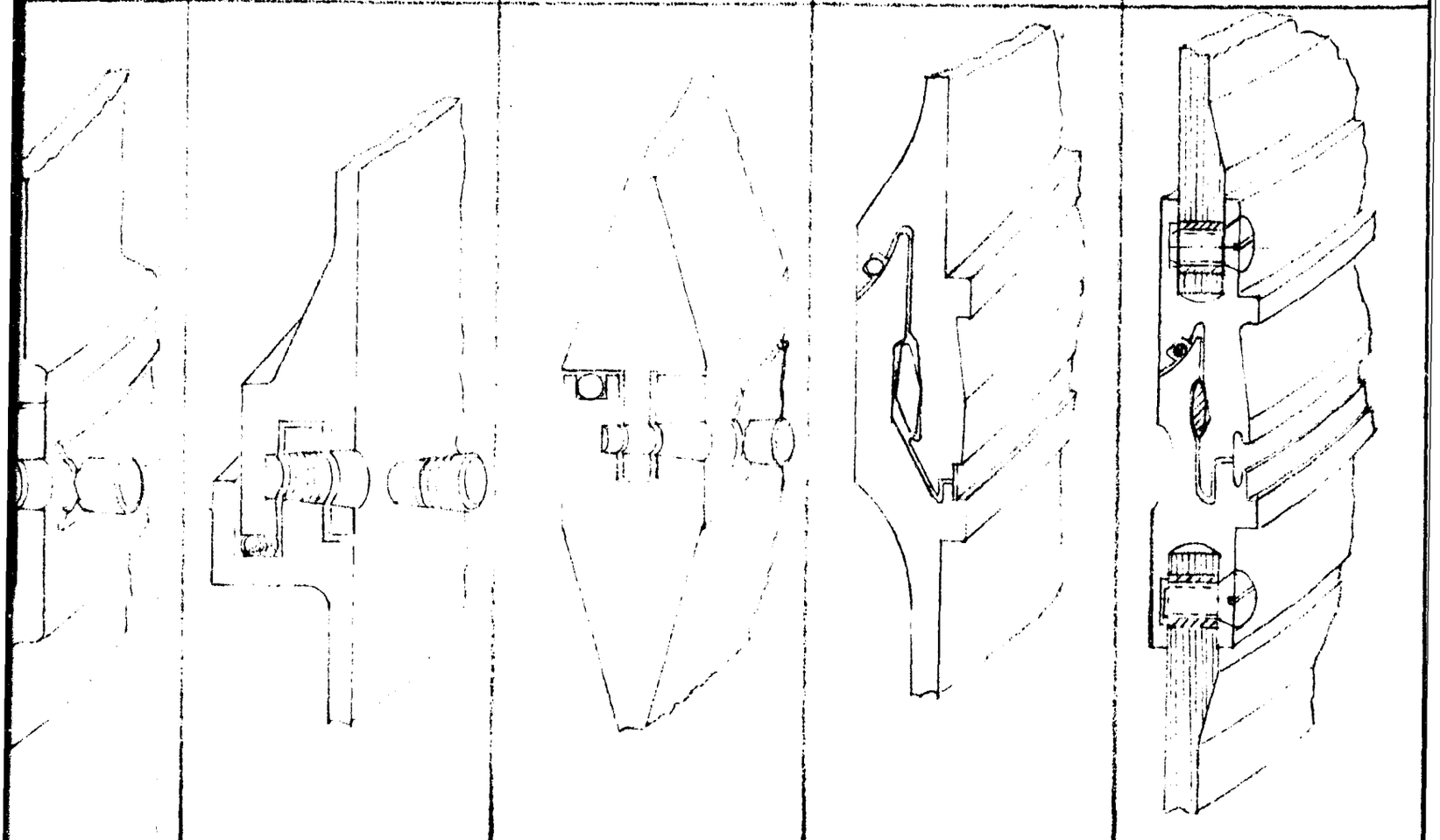				
2	3	1	5	6

FIGURE 5.2.1.-1

BOEING NO. D2-12591-1-1

SH 26

2

5.2.1.2.1 (Continued)

similar in concept to the type of shear joint used for Bomarc, but Bomarc had a 3 foot diameter where this design is for a 10 foot diameter. Of even greater significance is the method of assembly. Where Bomarc joints were assembled only with the aid of elaborate holding fixtures and the most careful attention, it would be necessary to assembly the joint here considered with a minimum of mechanical aids and in a suspended mode.

To insure success of assembly, the dimensional accuracy of the related parts must be near perfect. Normal tolerances for master tool construction, hole coordination, axial alignment and closeness of fit between pin and holes must be abandoned in favor of super precision work. Increasing accuracy requirements from thousandths of an inch to ten-thousandths of an inch would have a marked effect on fabrication costs.

5.2.1.2.2 TAPER PIN JOINT

Although at first appearance this design concept appears to be about equal in complexity to the straight pin concept, in reality they represent opposite ends of the producibility spectrum in terms of fabrication costs. Although there remains some question as to whether or not the taper pin design here considered can be made interchangeable, it was assumed that a satisfactory design can be achieved. Such a design would provide for a positive fit, with no allowance, while at the same time the individual part tolerance could be relatively large. It is this less precise dimensional control that brings the cost of fabrication down, and the positive seating of one joint ring on the other (as on present Minuteman) that reduces the assembly time.

5.2.1.2.3 TAPER PIN, THREADED

The threaded pin concept is more expensive to fabricate than the simple taper pin, because of the threads, tops and the need for a separate tapered insert.

U 4802 1434 ORIG. 4-65

5.2.1.2.3 (Continued)

Threaded parts are, of course, more subject to damage than most other kinds of fasteners and the inserts would have to be replaced if the threads were to be damaged.

Assembly time for the threaded taper pin is greater than that for the simple tapered pin because a more precise alignment relationship must be achieved prior to pin insertion. On the other hand, disassembly should require less time because the pins can be extracted directly. The simple taper pins may have to be freed by a puller device. Finally, the effectiveness of a tapered threaded bolt particularly in vibration, is highly questionable.

5.2.1.2.4 TAPER PIN (GLASS CASE)

There would be a slight increase in fabrication costs for this design over a similar joint type in a steel case. The difference would be due to a requirement for special drilling procedures using high speed, diamond impregnated cutting tools, and an expected higher frequency of part rejection. Assembly time should be identical with that required for the steel case application.

5.2.1.2.5 LOCKSTRIP JOINT

The lockstrip design is moderately more expensive to produce than the taper pin. Although, like the taper pin design, it can be produced using normal fabrication tolerances, it has more surfaces and more complicated surface relationships that necessitate the higher fabrication costs. Because of its self-aligning characteristics, it requires the least assembly time of all the designs considered. If the frequency of assembly and disassembly were to be relatively high, the lockstrip would be a good design choice. The application being considered here, however, would probably not warrant its selection.

5.2.1.2.6 LOCKSTRIP (GLASS CASE)

As can readily be seen from the drawings, the additional complexity associated with attaching metal rings to fiberglass case structure would substan-

USE FOR TYPE WRITTEN MATERIAL ONLY
U6 4002 1434 REV. 8-65

5.2.1.2.6 (Continued)

tially contribute to the cost of this design concept. The assembly time would, of course, be the same as that for the other lockstrip joint.

5.2.1.3 ANALYSIS

5.2.1.3.1 RELATIVE PRODUCIBILITY

The direct factory manhours associated with the actual fabrication of the various joint ring design concepts tend to vary over a rather wide range: From 340 manhours to 900 manhours. This is a ratio of 2.65 between the costs of the most expensive design and the least expensive. Tooling costs were not included because of the uncertainty of amortization factors, but if they had been considered, the spread would be even greater. The design concept considered to have the highest fabrication costs would also require the most expensive tooling. A more detailed explanation of these statements appears later.

RELATIVE PRODUCIBILITY OF ENGINE CASE
SEGMENTING JOINT CONCEPTS

Joint Type	Parts Fabrication Estimated Manhours	*Relative Producibility
1. Straight Pin	900	2.65
2. Taper Pin	340	1.00
3. Taper Pin, Threaded	500	1.47
4. Taper Pin (Glass Case)	400	1.18
5. Lockstrip	380	1.12
6. Lockstrip (Glass Case)	700	2.06

FIGURE 5.2.1-2

* Based on the establishment of 1.00 for baseline and assigning this value to the lease expensive design.

5.2.1.3.2 RELATIVE ASSEMBLY EASE

The manhours associated with assembly and disassembly functions, although much smaller in magnitude, vary over a range almost as great as that required for part fabrication. Here the ratio is 1 : 2.26 between the least and the most time consuming concepts. This could be of real significance if assembly and disassembly became a frequent occurrence, and in any case is important from the standpoint of possibly prolonging the field assembly operation.

RELATIVE ASSEMBLY EASE ASSOCIATED WITH
ENGINE CASE SEGMENTING JOINT CONCEPTS

Joint Type	Estimated Manhours Assembly	Dis-Assembly	*Relative Assembly Ease
1. Straight Pin	7.5	7.0	2.26
2. Taper Pin	4.0	6.0	1.56
3. Taper Pin Threaded	6.7	4.7	1.78
4. Taper Pin (Glass Case)	4.0	6.0	1.56
5. Lockstrip	3.0	3.4	1.00
6. Lockstrip (Glass Case)	3.0	3.4	1.00

FIGURE 5.2.1-3

* Based on the establishment of 1.00 for baseline, and assigning this value to the design requiring the least assembly and dis-assembly time.

5.2.1.3.3 CONCLUSIONS

It can be seen from Figure 5.2.1-2 that the taper pin joint concept is the easiest to fabricate, and from Figure 5.2.1-3 that the lockstrip joint concept is the easiest to assemble. The lockstrip is somewhat more costly to fabricate than the taper pin concept, while the latter is about 1 1/2 times more time consuming to assemble.

U3 4802 1434 ORIG. 4-65

5.2.1.3.3 (Continued)

There are no doubt several criteria by which the relative importance of these different manufacturing operations might be measured. In the absence of specific direction in this matter, however, cost was assumed to be the primary factor. On the basis of cost above, it would be necessary to perform the assembly and disassembly operation 12 times before installation costs would exceed initial fabrication costs. Since the operational concept being considered calls for only 8 removals per wing per year after initial emplacement, it would be about 10 years before assembly costs associated with joint design equaled the initial cost of joint fabrication.

U 480) 1474 ORIG. 4-65

5.3 SEALING JOINTS

When joints must act as efficient seals as well as structural members, certain general practices must be followed. The following is a "check list" which the engineer can use in his design development. It does not cover metal seals.

(a) Sealing material should never "work" from the loads passing through the joint.

(b) Shear loads carried by the joint should bypass the seal if possible.

(c) The seal is subjected to the same thermal, chemical, and pressure environment as the rest of the joint. It must be designed for such.

(d) Avoid thin, narrow gaskets. Their reliability is poor.

Reliability is sensitive to pressure required to achieve seal which is proportional to gasket area. It is also proportional to the width to thickness ratio as shown in Figure 5.3-1. This figure shows the minumum sealing stress required for a cork and rubber gasket material. The curve is essentially the same for any material, the only difference being a vertical shift. Figure 5.3-2 indicates the relative differences between many materials.

USE FOR TYPEWRITTEN MATERIAL ONLY

U3 4802 1434 REV. 8-65

MINIMUM SEALING STRESS FOR REPRESENTATIVE NONMETALIC GASKETS

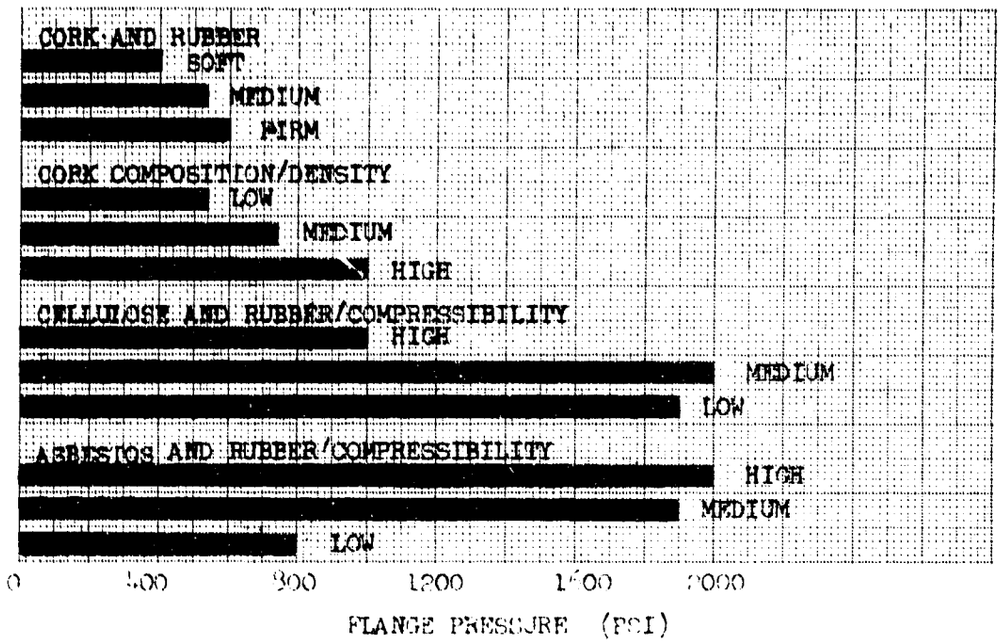

FIGURE 5.3-1

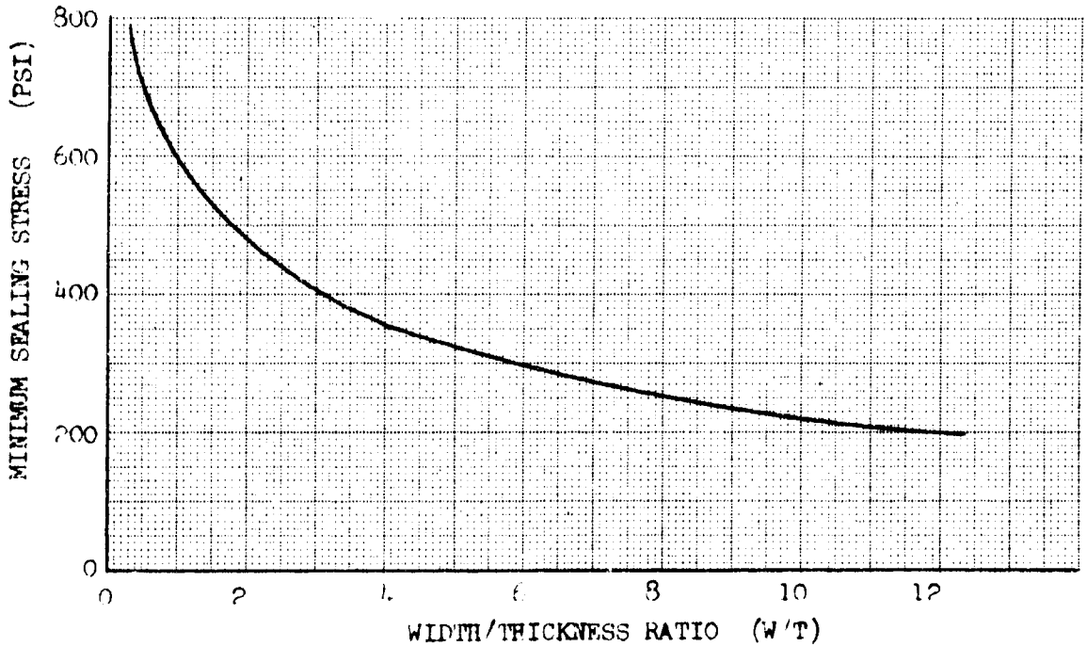

FIGURE 5.3-2

6.0 JOINT DESIGNS FOR LARGE, SEGMENTED, FILAMENT WOUND MOTOR CASES

Because their potential is so great, much emphasis is currently being placed on developing large segmented rocket motor cases. To realize weight and cost savings from the use of fiberglass in such applications, a lightweight reliable mechanical joint is required. However, the low bearing and shear strength of resin laminates force the engineer to develop unique joint designs encompassing metal to fiberglass or even fiberglass to fiberglass laminates, capable of developing the full strength of the basic fiberglass structure.

6.1 MOTORCASE CONCEPTS CONSIDERED

6.1.1 In this section, joint designs are considered for the two promising concepts for segmenting filament wound rocket motor cases, illustrated in Figure 6.1.1-1. These are (a) the circumferentially segmented case (or segmented concept), and (b) the longitudinally segmented case (or modular concept). The segmented concept consists of a forward closure, aft closure, and cylindrical center segments connected by lightweight pinned joints. The modular concept is an assembly of several modules, composed of filaments oriented on meridional lines, that form portions of the forward and aft closures and are mechanically fastened to the forward and aft polar rings. The outer cylinder is of prefabricated hoop rings or circumferential windings.

6.1.2 SEGMENTED CASE LIGHTWEIGHT JOINT

6.1.2.1 Since mechanically fastened joints are necessarily thicker than the case, they offer greater restraint to radial growth than does the case. If the joints are reinforced with steel, the differential growth is further exaggerated by the contrast in elastic moduli (10.5×10^6 psi for glass vs 30×10^6 psi for steel). To minimize the contrast, use was made of the ability of the filaments to orient themselves. If the joint is located at the tangent point of the closure and the cylinder, the closure contour and its filament path can be readily calculated to

USE FOR TYPEWRITTEN MATERIAL ONLY
U3 4802 1434 REV. 8-65

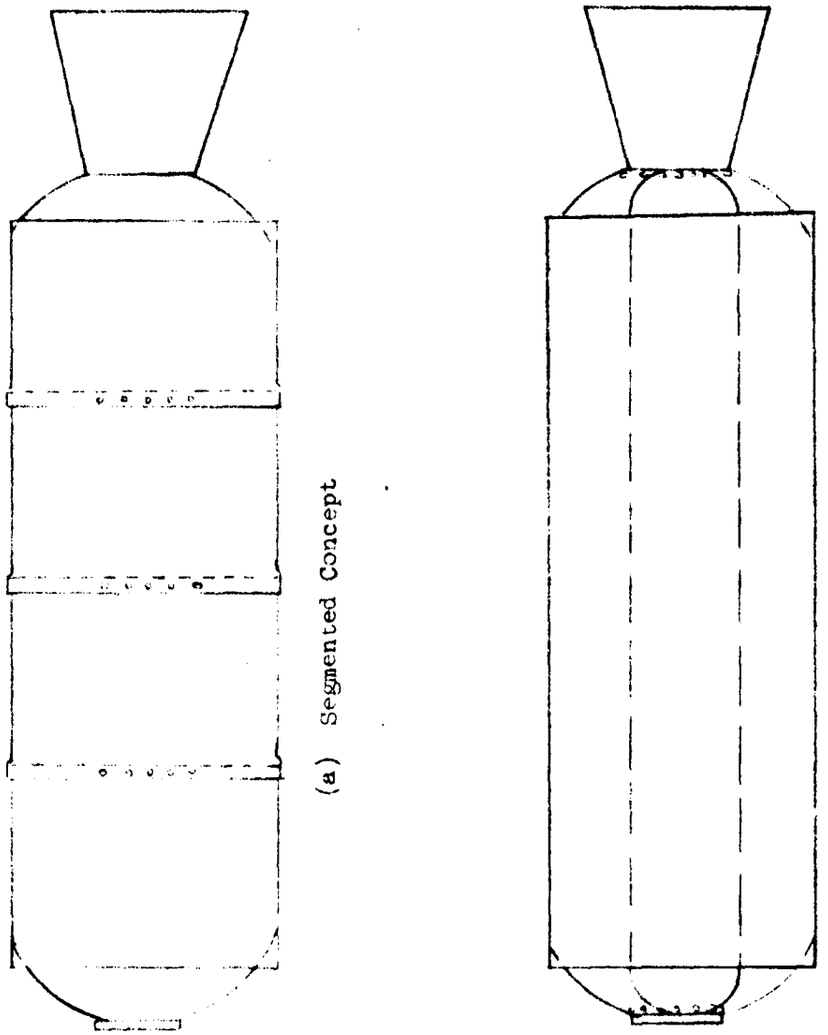

(a) Segmented Concept

(b) Modular Concept

SEGMENTING CONCEPTS FOR FILAMENT WOUND ROCKET MOTOR CASES

FIGURE 6.1.1-1

USE FOR DRAWING AND HANDPRINTING — NO TYPEWRITTEN MATERIAL

USE FOR DRAWING AND HANDPRINTING — NO TYPEWRITTEN MATERIAL

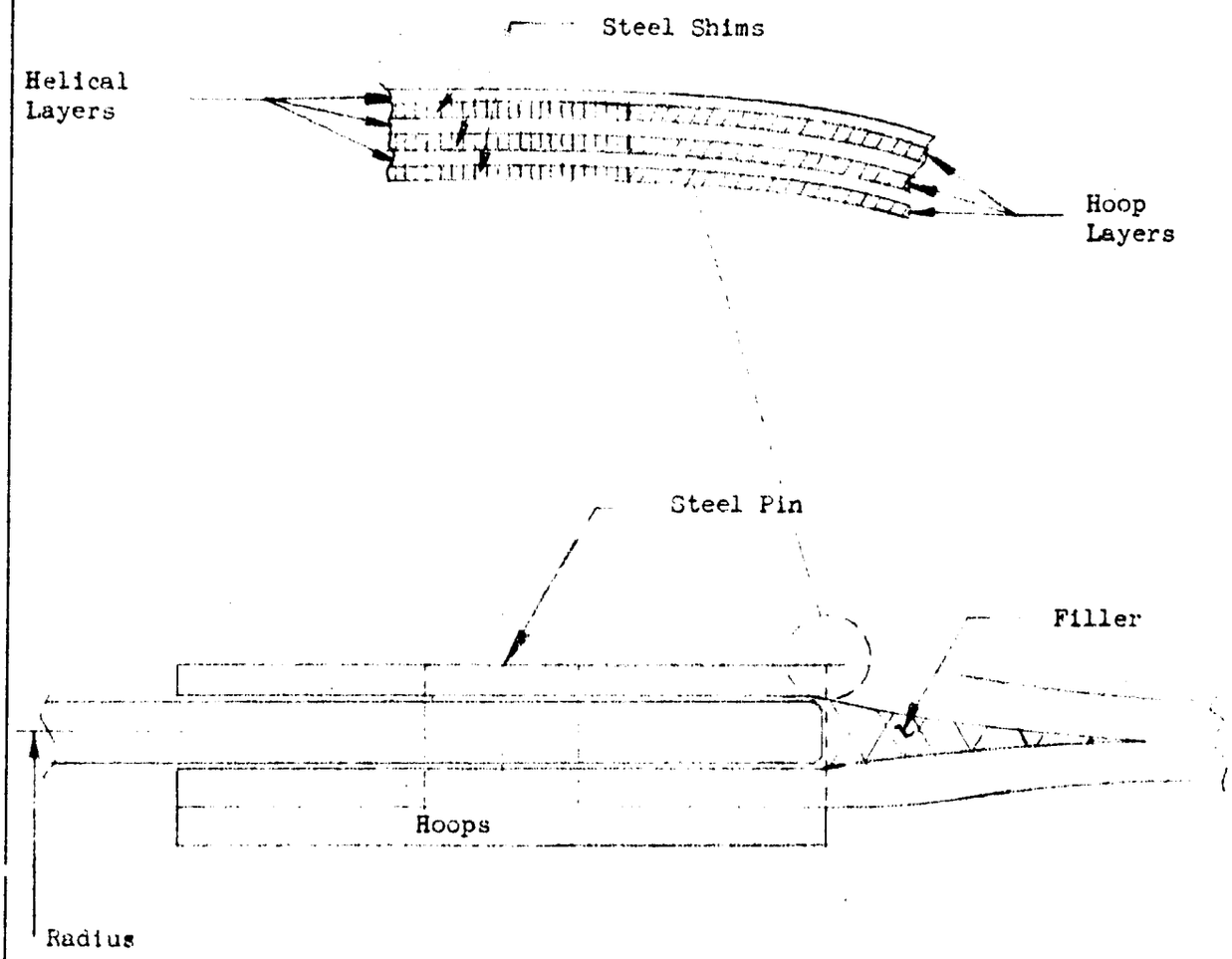

A CLEVIS JOINT FOR FILAMENT WOUND CASES

FIGURE 6.1.2-1

6.1.2.1 (Cont'd)

obtain the radial growth required to eliminate discontinuity forces. The case growth can be made to coincide with the joint growth by using the critical angle principle; that is, as the wrapping angle exceeds 54 3/4 degrees, the ratio of hoop strain to helical strain decreases.

Because rocket motor performance requirements for most applications, dictate joint locations and winding parameters, the joint concept developed was designed to provide the same radial restraint as the case. Trade studies indicated the clevis type joint of Figure 6.1.2-1 to be the most efficient concept. The clevis joint is composed of thin, high strength steel shims, laminated between the helical layers of the case with the hoop windings wound outside the joint region. It should be noted that the hoop and helical windings are interspersed in the case and that the hoop layers terminate at the start of the shims. The interspersion of hoop and helical windings requires an external skirt attachment. A design analysis of the joint is provided in the Reference (a.) document.(See 6.3).

6.1.2.2 SKIRT ATTACHMENT JOINT

6.1.2.2.1 Experience has indicated that under the influence of high longitudinal strain in the case and compressive strain in the skirt, a pure resin bond between skirt and case is unsatisfactory, or at best unreliable. To circumvent this problem, a concept was developed which uses a layer of elastomeric material between skirt and case to reduce shear stresses and improve reliability. This joint is shown schematically in Figure 6.1.2-2. A free body representation of the effect of both Skirt Compression and Case Growth on the joint is shown on Figure 6.1.2-3. An analysis of such a joint together with a discussion of its fabrication problems is included in Reference (a.).

USE FOR TYPEWRITTEN MATERIAL ONLY

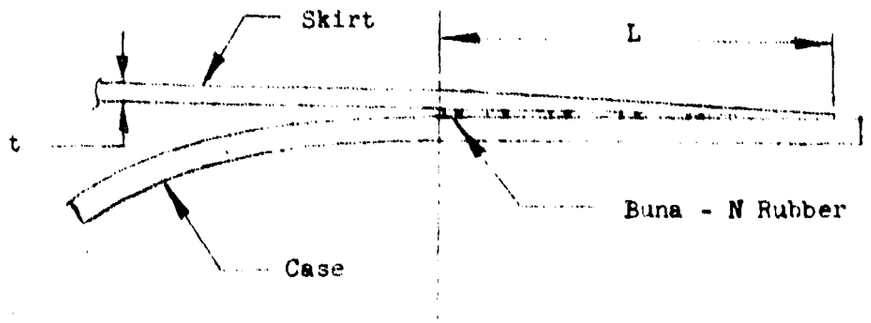

ELASTOMERIC SKIRT ATTACHMENT

FIGURE 6.1.2-2

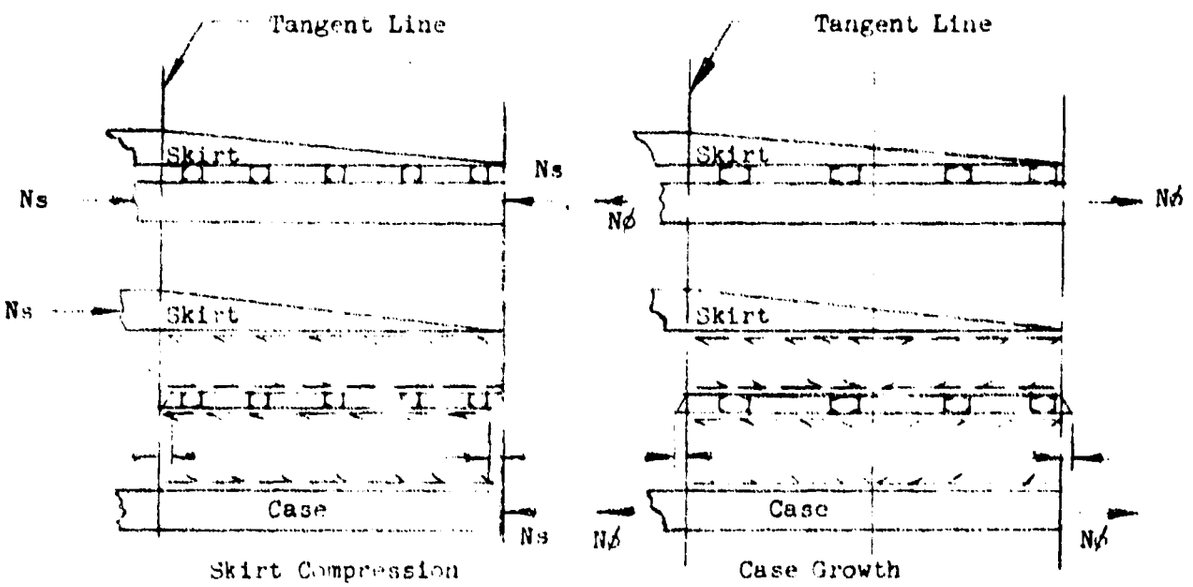

SHEAR STRESS IN AN ELASTIC BOND

FIGURE 6.1.2-3

USE FOR DRAWING AND HANDPRINTING — NO TYPEWRITTEN MATERIAL

6.1.3 MODULAR MOTOR CASE CONCEPT

6.1.3.1 The two basic elements of the modular concept are the module and the hoop ring. The modules are preformed and precured with all fibers oriented in the longitudinal direction, extending beyond the tangent lines to form either or both domes. The domes described by the modules consist of only longitudinal fibers, hence, their contours must describe a "no hoop load dome" which is discussed in greater detail in the "Dome Analysis" section of Reference (a.) . The circumferential strength of the cylindrical section is supplied by hoop rings which are fitted over the assembled modules. These hoop rings also consist of precured and preformed unidirectional fibers.

6.1.3.1.1 MODULE JOINT (TYPE A)

The tension load in the module is transferred by shear into steel foil which is integrally wrapped with the module. The foil in turn carries the load into a bolted joint connecting the adapter ring (Reference Figure 6.1.3-1). The analysis is basically similar to that presented for the segmented joint referenced in 6.1.2.1.

6.1.3.1.2 MODULE JOINT (TYPE B)

This light weight clevis joint provides a unique design which eliminates bending and assures strain compatibility at the polar ring equal to that carried by the outer plate.

6.1.3.1.3 FABRICATION PROBLEMS

Steel sheets designed to carry bearing loads in the joint areas are laminated between the glass. Any necessary reinforcement or filler cloths are added in conjunction with the steel laminates. When loading permits, the skirts are wrapped as an integral part of a hoop ring instead of using the elastomeric bond discussed in 6.1.2.2.1 (Reference Figure 6.1.3-3). The following requirements demand extreme care in laminating the steel with the module:

USE FOR TYPEWRITTEN MATERIAL ONLY

U3 4807 1434 REV. 8-65

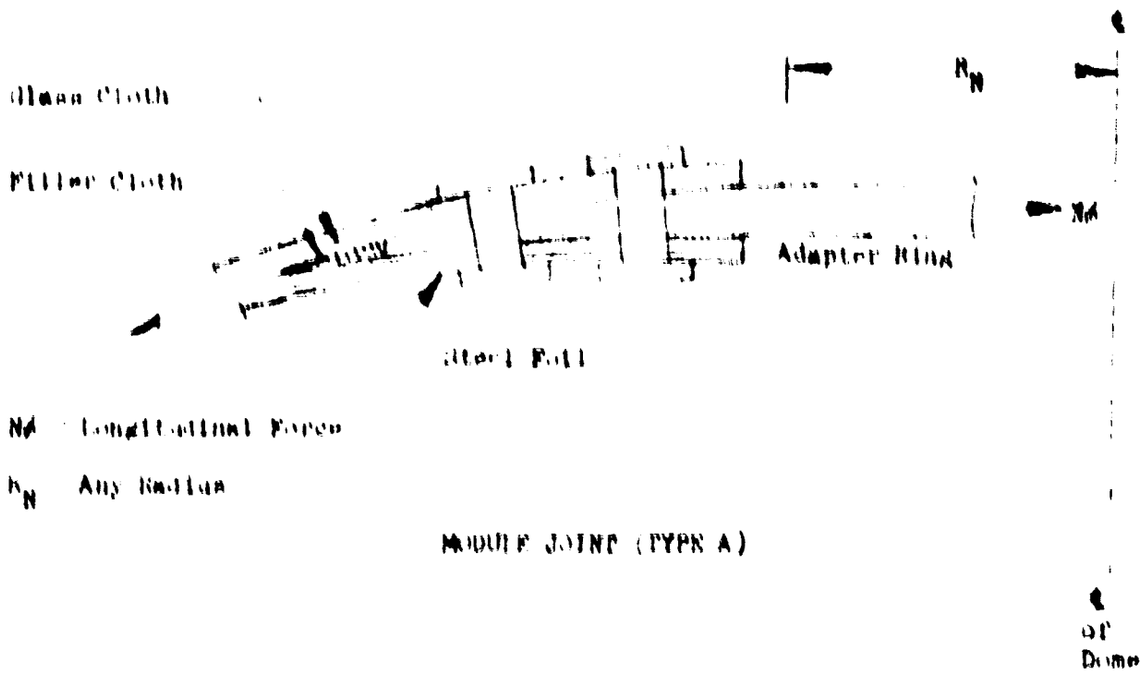

MODULE JOINT (TYPE A)

FIGURE 6.1.3-1

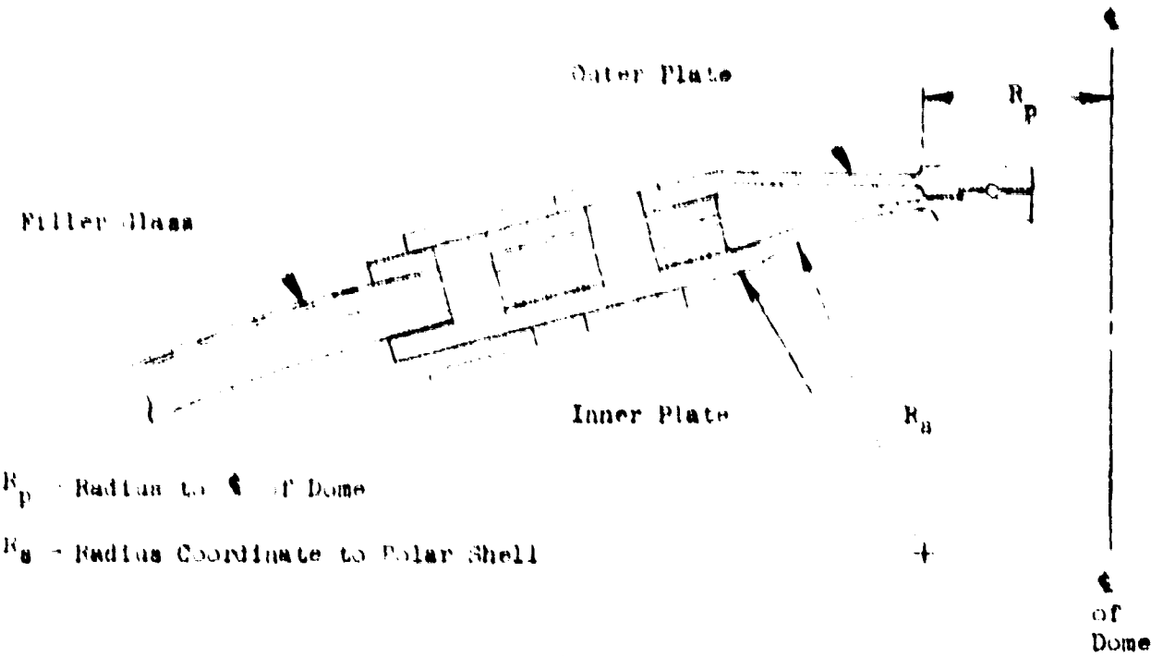

MODULE JOINT (TYPE B)

FIGURE 6.1.3-2

USE FOR DRAWING AND HANDPRINTING — NO TYPEWRITTEN MATERIAL

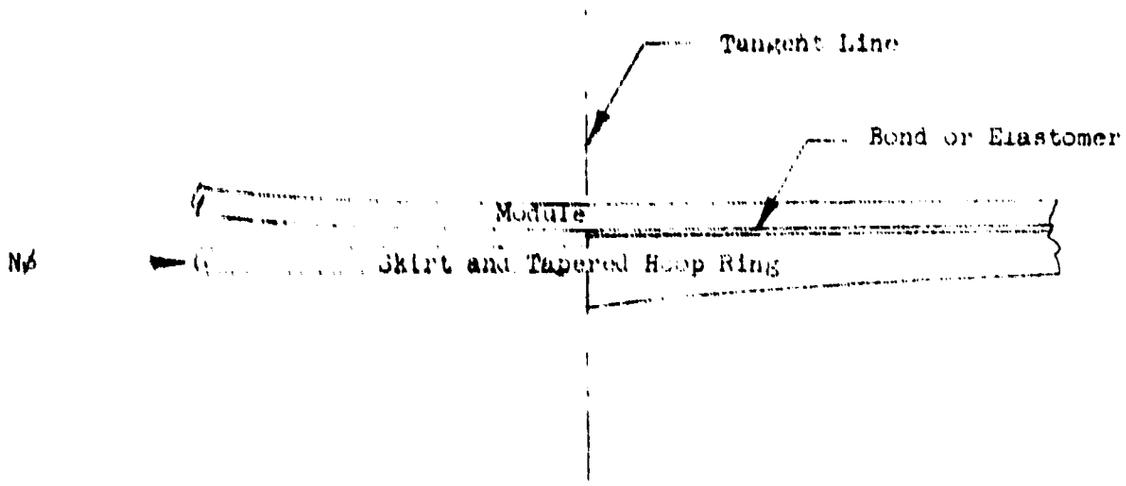

HOOP-SKIRT RING

FIGURE 6.1.3-3

USE FOR DRAWING AND HANDPRINTING — NO TYPEWRITTEN MATERIAL

6.1.3.1.3 (Cont'd)

A. Positive positioning and holding of the foil from winding through cure.

B. A smooth transition into the joint maintained to prevent bridging or winding material.

C. Provisions to guarantee that during the cure cycle, the greater coefficient of thermal expansion of the foil is recognized and that steps are taken to minimize the difference.

D. The foil shall be cleaned and primed in order to provide a bond capable of carrying large shear loads.

USE FOR TYPEWRITTEN MATERIAL ONLY

U3 4802 1434 REV. 8-65

6.2 RECENT STATE OF THE ART DEVELOPMENTS IN THE SHIM JOINT CONCEPT

Building on earlier technology, the Bendix Corp. conducted a study, the results of which are presented in this section. It is considered typical of similar efforts conducted by other sources and represents an advance in the state of the art of Shim Joint Concept development. The information source is identified by reference b. together with related references a., and c. through i. of paragraph 6.3.

6.2.1 ABSTRACT

This paper describes a shim joint concept that was developed to improve the efficiency of joints for attaching to composite material structural members. The shim joint concept reinforces the composite material in the region of the joint with thin metallic layers which permits employing a conventional shear pin joint between the composite members and a mating fitting. Design parameters are defined and design data are established. Improved methods for fabricating the reinforced tube ends and improved testing fixtures are developed. An advanced optimization technique has been applied to the design of the shim joints. It is shown that design parameters can be optimized conveniently by the structural synthesis approach in determing the minimum weight configuration. The results indicate that the shim joint concept can be successfully applied to composite members without prohibitive attachment weight penalties.

6.2.1.1 INTRODUCTION

It has been determined that structural tubes fabricated of composite materials would be lighter than tubes made from more conventional materials such as steel, aluminum, or titanium alloys. However, even though structural members can be made lighter with composite materials than with the more common metal alloys, the weight of reinforcing composite tube ends and joining them to end fitting will impose penalties. As a result, the significant weight saving potential of composite materials may tend to be offset somewhat by the weight

U.S. 4807 1434 REV. 8-65

penalties imposed by joining the tubes to end fittings. The design of efficient, lightweight joints between composite tubes and end fittings is, therefore, a necessary element in the development of composite structural components and requires formulation of design criteria and analysis techniques.

The development of joints for composite material structural members has been studied extensively by a number of investigators. Most of the previous efforts have been confined to either bonded or mechanical joints. However, both of these joint types possess inherent limitations.

This paper describes a shim joint concept which considerably reduces these limitations and improves the efficiency of the joints. The basic geometry of the shim joint is presented in Figure 6.2.1-1. The shim layers are of uniform thickness and constant length in the longitudinal direction. The composite tube end is separated into several layers and bonded to the shim layers by an adhesive. A single circumferential row of conventional shear pins is used to transfer loads from the composite tube, through the shim layers, to the mating part.

Most of the information presented thereafter refers to fiber glass composite tubes subjected to tensile load. However, this shall not be interpreted as the limitation of the shim joint concept.

The composite material used to establish design data consisted of AF-994 glass filament and Shell Chemical Company's 58-08R resin system. The shim material was AM-355 steel (ultimate tensile strength 260 ksi).

6.2.1.2 ANALYSIS OF ATTACHMENT AREA

Analysis of the configuration in Figure 6.2.1-1 resulted in an extensive list of potential design parameters. Most of the geometric variables are defined in Figure 6.2.1-1. A complete listing of geometry variables is presented below.

a = distance from pin row centerline to tube end

$D_o(D_i)$ = outside (inside) tube diameter

$D_{oj}(D_{ij})$ = outside (inside) tube diameter in attachment area

S 4807 1434 REV. 8-65

USE FOR DRAWING AND HANDPRINTING — NO TYPEWRITTEN MATERIAL

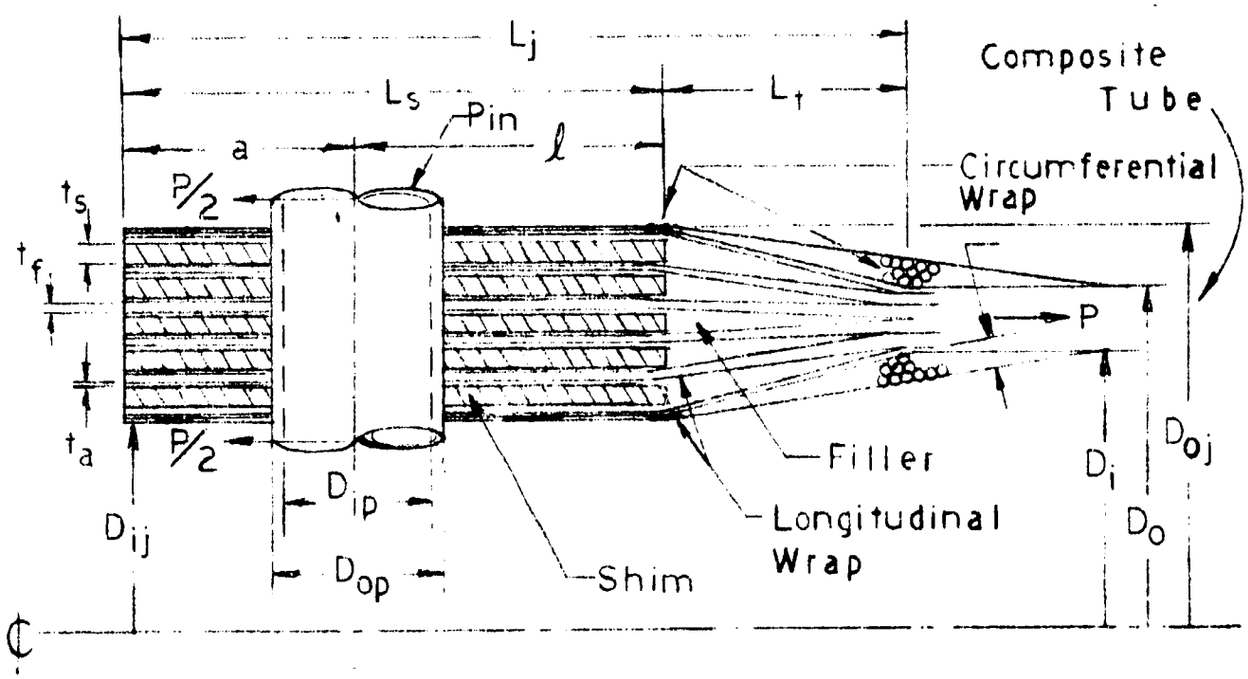

TUBULAR SHIM JOINT DESIGN VARIABLES

Figure 6.7.1-1

$D_{op}(D_{ip})$ = outside (inside) pin diameter

ℓ = distance from pin row centerline to back edge of shims

L_j = total length of reinforced attachment area ($L_s + L_t$)

L_r = length of reinforcing ring

L_s = longitudinal length of metallic shim layer ($\ell + a$)

L_t = wall thickness transition zone

N_c = number of filament layers in tube wall that do not extend into the attachment area

N_p = number of pins along the tube circumference

N_s = number of metallic shim layers

t_a = thickness of the adhesive layer joining the metallic shim to the composite material

t_c = thickness of composite layers which do not extend between shims

t_f = thickness of composite layers between shims

t_r = maximum thickness of the transition length circumferential reinforcing rings

t_s = thickness of metallic shim layers

W = circumferential distance between pin centerlines

And the material weight densities are denoted in the design procedure as follows:

ω = density of the composite material

ω_a = density of the adhesive material

ω_f = density of the filler material

ω_p = density of the pin material

ω_s = density of the metallic shim material

Mechanical fasteners in shim reinforced composite materials produce much the same failure mode as in metals. The following analysis considers those potential failure modes resulting from axial tension loads on the joint. Net

USE FOR TYPE OF MATERIAL ONLY

U3 4802 1434 REV. 8-65

area tensile failure, pin hole bearing failure, hoop tension failure, shear bearing tear-out failure, and pin shear failure can all be produced by variation of design parameters. Failure can also occur due to excessive shear in the bend joint between the shim and the composite material, or by delamination of the fibrous layers in the tube wall thickness transition length.

6.2.1.2.1 NET AREA TENSION

Joint failure may occur in tension along the pin row centerline if the net tension area becomes sufficiently small. The ultimate strength of the net tension area depends on the ductility of the metallic shim material when a low elastic modulus composite is used. The composite material in the net tension area can support high stress if the shim can be strained sufficiently. For this reason, the combined steel and composite areas were utilized in calculating the net tension area stress.

$$A_t = (W - D_{op}) \left(\frac{D_o - D_i}{2} - .006N_c + N_s t_s \right) \qquad (1)$$

where $W = \pi D_{oj}/N_p$. The ultimate tension load is given by:

$$P_{ult} = N_p K_{tu} A_t F_{tu} \qquad (2)$$

where K_{tu} is the ultimate tensile efficiency factor and F_{tu} is the ultimate tensile strength of the metal.

The allowable tensile stress is a function of the D_{op}/W ratio as in lug strength study. Flat plate tests were conducted to determine tensile allowables and results are presented in Paragraph 6.2.1.3 of this paper

6.2.1.2.2 PIN HOLE BEARING

Test results have indicated that bearing failure of shim reinforced composites normally occurs as a result of shim buckling. Buckling strength is a function of individual shim thickness, t_s, and the unsupported metal span length,

U.S. 4802 1496 REV. 8-65

D_{op}. The bearing allowables are presented in Paragraph 6.2.1.3 of this paper as a function of the ratio D_{op}/t_s. The allowable pin bearing area and the ultimate tension load are:

$$A_{br} = N_s t_s D_{op} \quad (3)$$

$$P_{ult} = N_p K_{br} A_{br} F_{tu} \quad (4)$$

where K_{br} is the bearing efficinecy factor.

Since the failure mode is actually one of stability, the degree of restraint due to clamping must also be considered in establishing allowables for this failure mode. A joint which is tightly clamped by a threaded nut on the pin will produce much higher bearing stresses than an identical joint which is not clamped or restrained. Clamping of the flat plate tests were adjusted to duplicate that expected in the composite tube attachment.

6.2.1.2.3 HOOP TENSION

Hoop tension can occur when the pin row is placed too close to the tube end. For unidirectional composite plies, the tensile strength of the glass epoxy system is quite low in the transverse directions, therefore, the composite material was not considered to be effective in transmitting hoop stress during the establishment of allowables. Further testing would be required to establish allowables for attachments which incorporate plies oriented at an angle to the member axis. The allowable is defined in terms of the skin material ultimate tensile strength and is a function of the a/D_{op} ratio. The hoop tension area is given by the following expression:

$$A_{ht} = N_s t_s \left(a - \frac{D_{op}}{2} \right) \quad (5)$$

The ultimate load for the joint is

$$P_{ult} = N_p K_{ht} A_{ht} F_{tu} \quad (6)$$

U 4P02 (434 - REV. 8-64)

USE FOR DRAWING AND MANUFACTURING—NO TRANSMITTAL MATERIAL

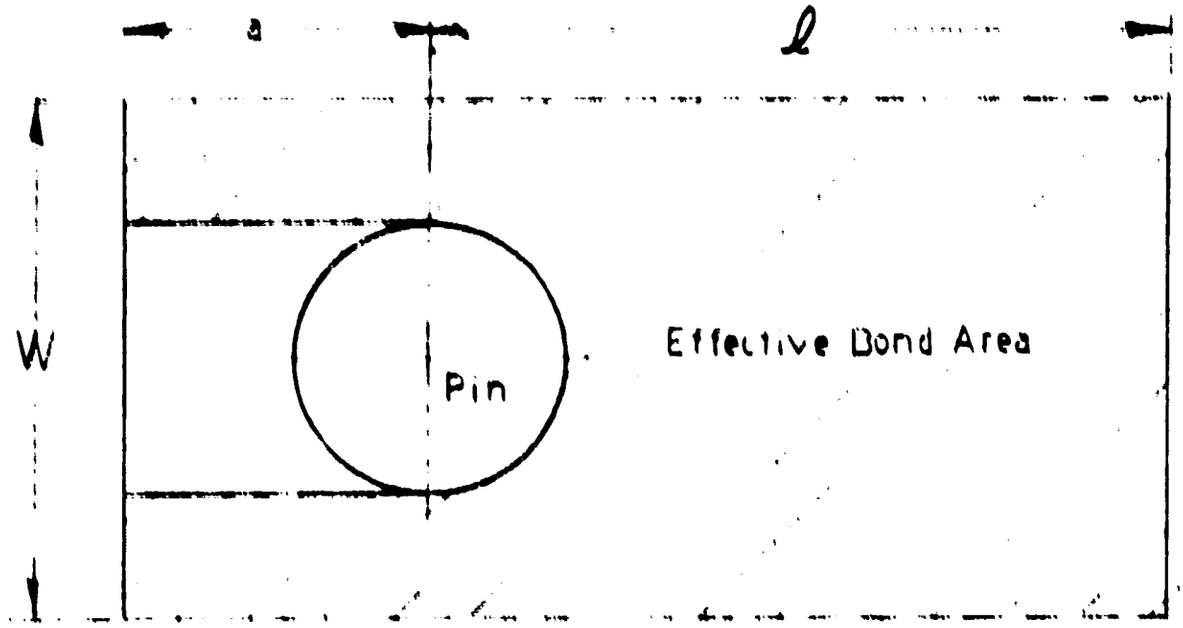

EFFECTIVE BOND AREA

Figure [illegible]

where k_{ht} is the hoop tension efficiency factor, further explained in Paragraph 6.2.1.3.

6.2.1.2.4 SHEAR BEARING

Past experience with lug design would indicate that shear bearing failure could also occur if the pin row is placed too close to the end. There were no clearly defined occurrences of shear bearing failure during the flat plate test series of this study. It has been suggested that the tubular members may be more susceptible to shear bearing failures since the tubular geometry possesses more lateral constraints than the flat plate specimens. Only tubular test data can ascertain this fact.

6.2.1.2.5 BOND

To design a bonded shim joint for ultimate loading, it was necessary to use average shear strength allowables from flat plate tests. The shim area which was considered to be effective in bond is shown in Figure 6.2.1-2 to be a function of both a and ℓ. An effective bond length ℓ_e, was defined by dividing the shaded bond area by the width, W.

$$\ell_e = \frac{W(\ell + a) - N_p\left(a\, D_{op} + \frac{\pi}{8} D_{op}^2\right)}{W} \qquad (7)$$

The ultimate load for a shim joint is given by

$$P_{ult} = 2N_s A_s F_s \qquad (8)$$

where $A_s = \ell_e W$, and F_s is the allowable shear stress, defined in terms of the effective bond length ℓ_e.

6.2.1.2.6 WALL THICKNESS TRANSITION ZONE

From a weight standpoint, it is desirable to make the transition length as short as possible. As the transition length becomes shorter, however, the radial force component which tends to separate the fibrous layers (delaminate) at the base of the transition length becomes greater. These radial forces create

U3 4802 1434 REV. 8-65

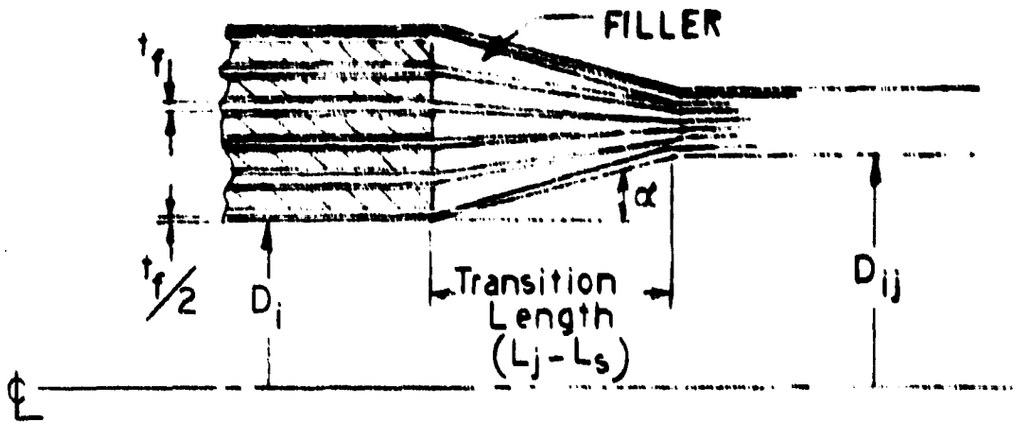

TRANSITION JOINT

Figure 6.2.1-3

USE FOR DRAWING AND HANDPRINTING — NO TYPEWRITTEN MATERIAL

tensile strain concentrations at the lateral separation point of adjacent layers which must not exceed the ultimate tensile strain for the resin in the composite. The tensile strain at the separation point can be controlled by designing circ wrap reinforcement rings at both the inside and outside diameters to restrict radial movement. The transition zone was analyzed by using a finite element model of beams and springs. The thickness of the required reinforcing ring is

$$t_p = \frac{D_o^2 \quad P_i - (P_i)_{ult}}{4ET\ y_a} \qquad (9)$$

where P_i is the radial force on the exterior layer, $(P_i)_{ult}$ is the allowable radial force on the exterior layer and y_a the allowable radial displacement of the exterior layer. Both $(P_i)_{ult}$ and y_a values may be established through analytical-experimental studies (Reference b, pp. 98-99).

6.2.1.2.7 PIN SHEAR

The pins are loaded in double shear and the design requires simply that the cross-sectional area be large enough to ensure that the shear stress does not exceed the ultimate shear strength of the material. If hollow pins are used, the ratio D_{ip}/D_{op} must be low enough to ensure that the pins will not crush or buckle. The ultimate load for the pinned joint as governed by pin shear is given by:

$$P_{ult} = 2N_p A_p F_{su} \qquad (10)$$

where A_p is the pin area, and F_{su} the ultimate shearing strength of the pin material.

6.2.1.3 FLAT PLATE TESTS

The flat plate test specimen (Figure 6.2.1-4) was developed to enable inexpensive determination of ultimate strength design allowables for the various failure modes in a shim joint. The presence of free edges on the sides of the flat plate configuration prevents exact simulation of the tubular joint,

U3 4007 1434 - Rev. 8-65

USE FOR DRAWING AND HANDPRINTING—NO TYPEWRITTEN MATERIAL

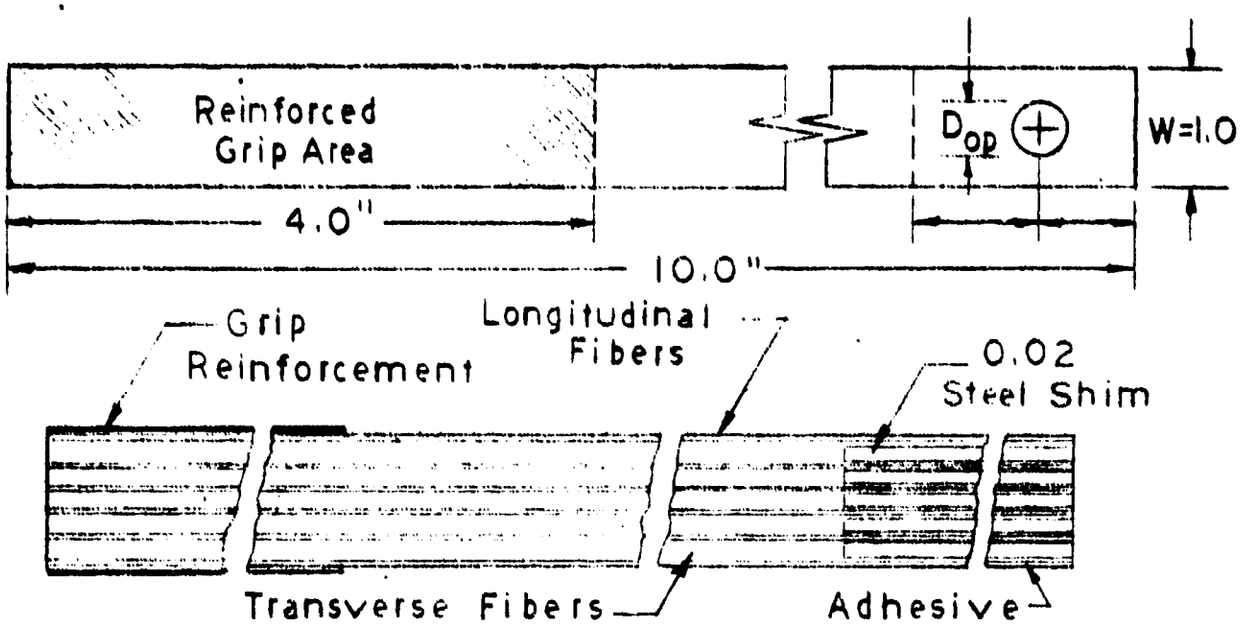

TYPICAL FLAT PLATE SPECIMEN

Figure 6.2.1-4

but it is felt to be adequate for most failure modes.

The flat plate specimen used in this study is best described by Figure 6.2.1-5. Five 0.02 inch steel shim layers were used in each of the flat plate specimens, but the other materials were included in varying quantities to produce failure modes which were of interest. The composite material was composed of 65 percent glass, by volume, and 35 percent resin. The W dimension was fixed at 1.0 inch. Also tests conducted during this study have included only longitudinal fibers between the shims. Further testing will be required to determine design allowables for shim joints in laminates having fibers oriented at an angle to the loading direction.

The specimens were loaded by a pin through the shim joint and by a friction grip on the opposite end. The shim pack was clamped lightly during the test to simulate the clamping action expected from a metal fitting mating with the reinforced tube end. The specimens were loaded to rupture to obtain ultimate strength design allowables.

6.2.1.3.1 NET AREA TENSION

The net area tension data is shown in Figure 6.2.1-5. The calculated stress values were divided by the ultimate tensile strength of the shim material to form the net tension efficiency factor, K_{tu}. A mean allowable curve is shown superimposed on the test data. The mean allowable is defined in terms of D_{op}/W by the expression:

$$K_{tu} = \frac{79.33}{143.75 - 100\ D_{op}/W} \qquad (11)$$

which was used in the net tension area failure envelope in the design.

Data points denoted as "lower bound" values arise from tests in which failure occurred either in a different mode, or in a combination of modes which included the one of interest.

USE FOR DRAWING AND HANDPRINTING — NO TYPEWRITTEN MATERIAL

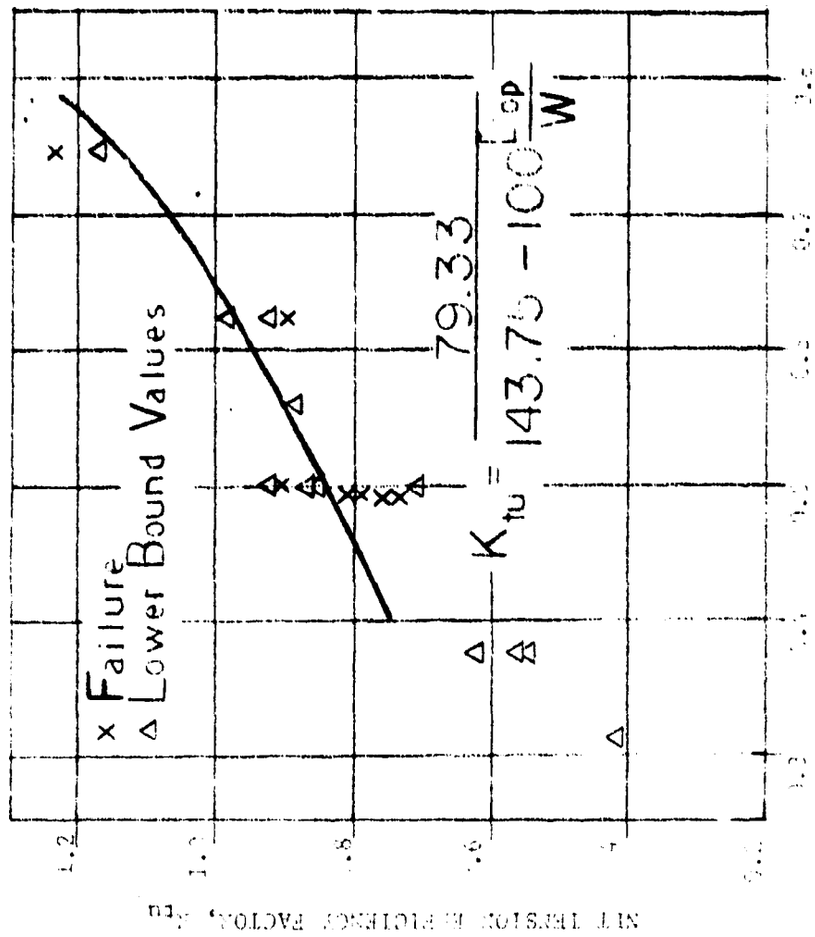

NET TENSION TEST RESULTS vs. L_{op}/W

Figure 6.2.1-3:

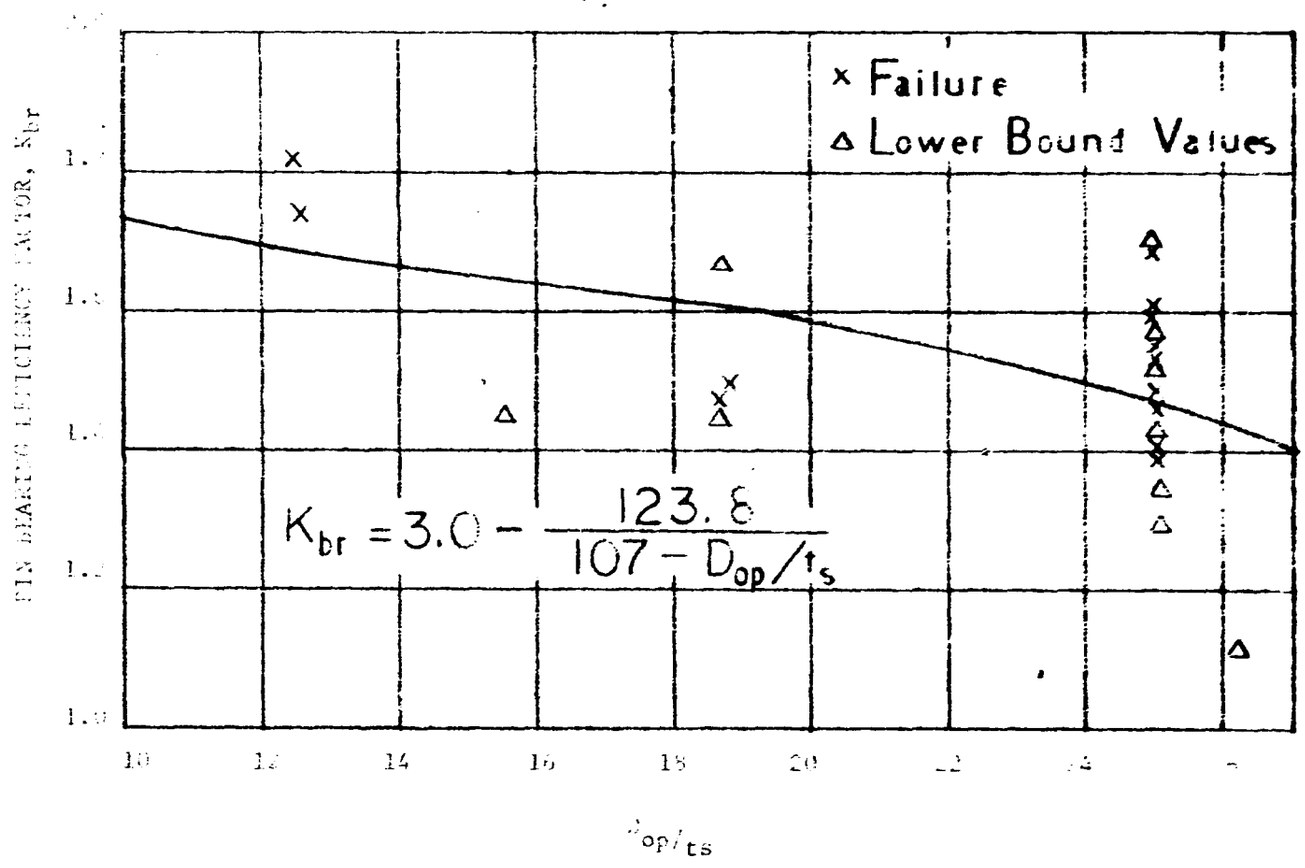

PIN BEARING TEST RESULTS vs. D_{op}/t_s

Figure 6.2.1-6:

6.2.1.3.2 PIN BEARING

Figure 6.2.1-6 shows the flat plate pin bearing strength data plotted versus the D_{op}/t_s ratio. The bearing ultimate stress values have been divided by the ultimate tensile strength of the shim material to form the pin bearing efficiency factor, K_{br}. The curve was derived emperically and is defined by

$$K_{br} = 3.0 - \frac{123.8}{107 - D_{op}/t_s} \qquad (12)$$

Equation 12 was used as the pin bearing failure envelope in the optimum design procedure.

Pin bearing failure is of special interest because it is more ductile than other failure modes. When structural members are fabricated from brittle materials such as fiber glass, it may be desirable to design the assembly such that initial failure occurs in the attachment by pin bearing to avoid catastrophic failure of the assembly.

6.2.1.3.3 HOOP TENSION

The hoop tension test results are plotted in Figure 6.2.1-7 as a function of the a/D_{op} ratio. Again a mean allowable curve has been derived to fit the test data. The mean allowable curve is obtained by

$$K_{ht} = \frac{3.173}{a/D_{op} + 0.65} \qquad (13)$$

which was used as the hoop tension failure envelope in the design procedure.

6.2.1.3.4 BOND

The effective length of bond for flat plates, ℓ_e, was defined in terms of both "ℓ" and "a" by

$$\ell_e = (\ell + a) - a\,D_{op} - \frac{\pi}{8} D_{op}^2 \qquad (14)$$

Figure 6.2.1-8 shows the test data plotted versus the effective

U S 4802 1494 REV. 8-65

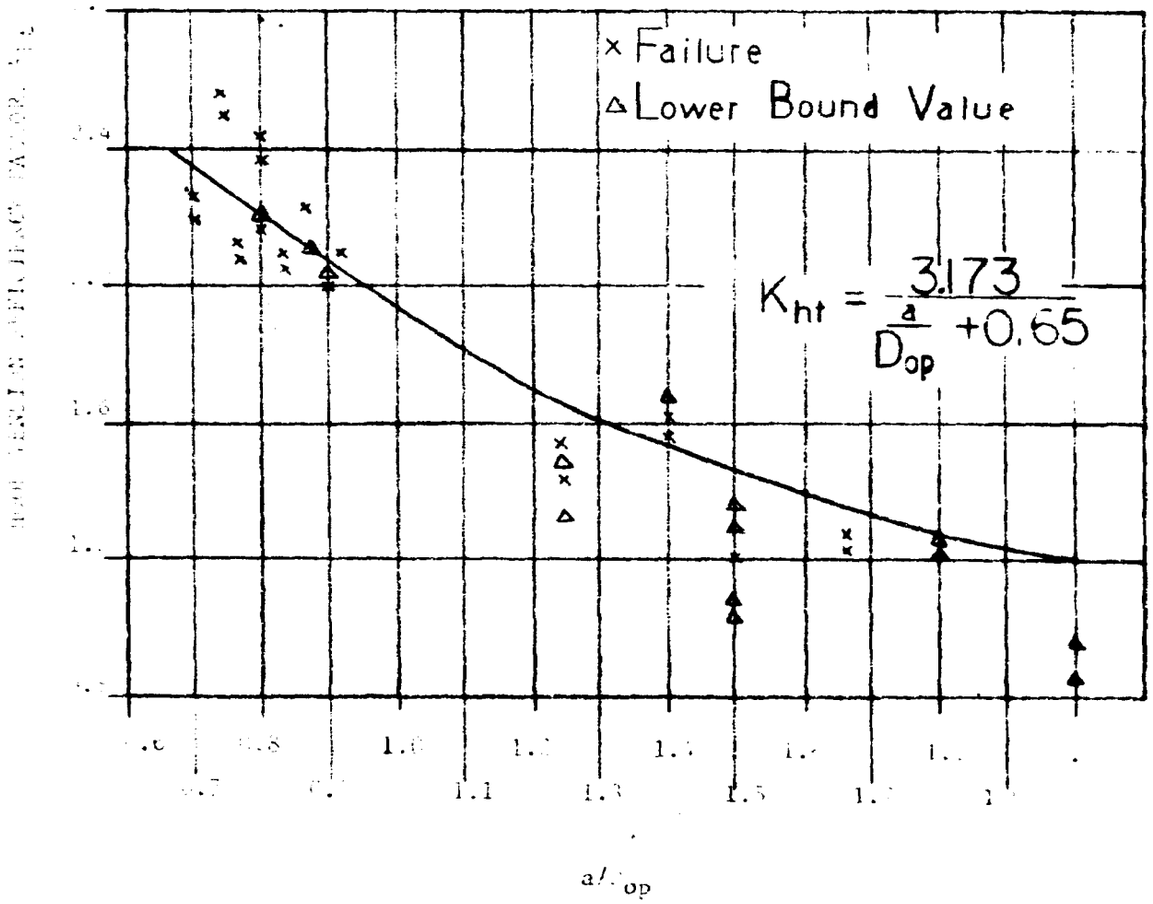

HOOP TENSION TEST RESULTS vs. a/D_{op}

Figure 6.2.1-7:

USE FOR DRAWING AND HANDPRINTING — NO TYPEWRITTEN MATERIAL

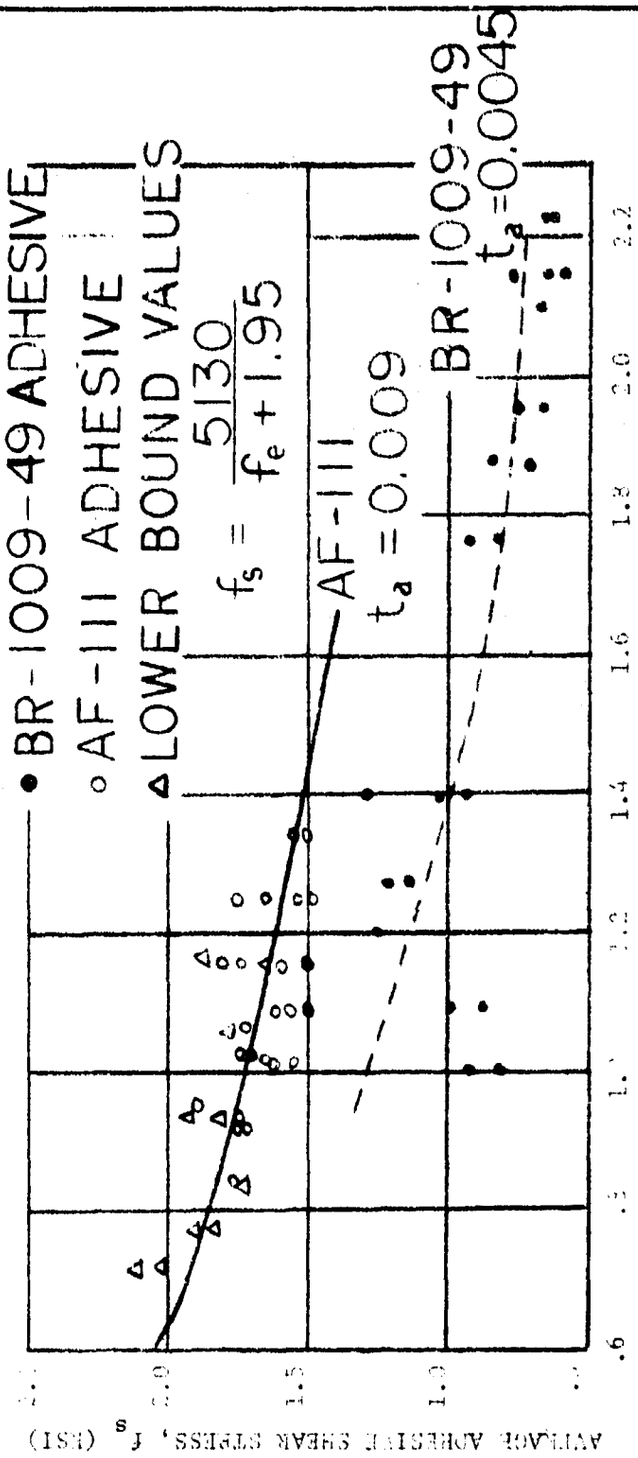

EFFECTIVE JOINT LENGTH, le (in.)

AVERAGE ADHESIVE SHEAR STRESS VS.

EFFECTIVE JOINT LENGTH

Figure 6.2.1-8.

length. The solid line curve represents the bond strength of the AF-11 (3M Corporation) adhesive tape, and the dashed line curve shows the bond strength for the BR-1009-49 tack primer (American Cyanimid Corporation). An algebraic equation was derived to fit the AF-111 shear strength. The curve is defined by

$$f_s = \frac{5130}{\ell_o + 1.95} \qquad (15)$$

where f_s is the average adhesive shear stress.

The AF-111 adhesive film produces thicker adhesive layer than the BR-1009-49 tack primer. It can be shown (Reference b, pp. 10-12, pp. 75-87) that thicker adhesive layer does reduce the shear stress concentration factor.

6.2.1.3.5 TRANSITION ZONE

Two flat plate speciments were fabricated without the excess transverse fiber glass layer to study the delamination failure mode in the thickness transition zone. The specimens did fail by delamination as expected, and the data were used to establish allowable stress level in the circumferential, reinforcing ring, design procedure.

6.2.1.4 OPTIMUM DESIGN

A feasible design is one that behaves satisfactorily under the specified conditions. In general, it is possible to find more than one feasible shim joint design for a given composite tube. If one of the design features is taken as the design objective, it is possible to find a feasible design which is most favorable as judged by the design objective. In the present study, weight was chosen as the design objective.

6.2.1.4.1 DESIGN CONSTRAINTS

A shim joint is considered feasible if it satisfies the following design constraints:

1. Net section tension:

USE FOR TYPEWRITTEN MATERIAL ONLY

$$\left[\frac{\pi}{2}(D_{oj} + D_{ij}) - N_p D_{op}\right] \left[\frac{1}{2}(D_{oj} - D_{ij}) - N_c t_c + N_w t_w\right]$$

$$\times K_{tu} F_{tu} \geq P_{ult} \tag{16}$$

2. Bearing

$$N_p D_{op} K_w t_w K_{br} F_{tu} \geq P_{ult} \tag{17}$$

3. Hoop tension

$$N_p \left(a - \frac{1}{2} D_{op}\right) K_w t_w K_{ht} F_{tu} \geq P_{ult} \tag{18}$$

4. Bond

$$\pi N_w (D_{oj} + D_{ij}) t_c F_s \geq P_{ult} \tag{19}$$

5. Circ reinforcing ring

$$t_r \geq \frac{D_o^2 \left[P_j - (P_j)_{ult}\right]}{4 E_j y_a} \tag{20}$$

6. Pin

$$\frac{\pi}{2} N_p D_{op}^2 \left[1 - \left(\frac{D_{ip}}{D_{op}}\right)^2\right] F_{su} \geq P_{ult} \tag{21}$$

6.2.1.4.2 OBJECTIVE FUNCTION

To write the objective function, the weight of each joint component is expressed in terms of the design variables:

1. Fiber glass composite:

$$W_{fg} = \left[\frac{\pi}{4}(D_o^2 - D_i^2) L_j - \frac{\pi}{4} D_{op}^2 N_p \left(\frac{D_o - D_i}{2} - N_c t_c\right) - N_c t_c \pi \left(\frac{D_o + D_i}{2}\right) L_j\right] \omega \tag{22}$$

US 4802 1434 REV. 6-65

2. Shim

$$W_s = N_s t_s \left[\pi \left(\frac{D_{oj} + D_{ij}}{2} \right) L_s - \frac{\pi}{4} D_{op}^2 N_p \right] \omega_s \tag{23}$$

3. Circ wrap ring:

$$W_r = \left[2\pi (D_o + D_i) t_r^2 \tan \frac{\alpha}{2} \right] \omega \tag{24}$$

4. Filler

$$W_f = \frac{\pi}{4} (D_{oj} + D_{ij}) N_s L_t (t_s + 2 t_a) \omega_f \tag{25}$$

5. Pin

$$W_p = \frac{\pi}{4} D_{op}^2 \left[1 - \left(\frac{D_{op}}{D_{ip}} \right)^2 \right] N_p \left[\left(\frac{D_o + D_i}{2} - N_c t_c \right) + N_s (t_s + 2t_a) + \ell_p \right] \omega_p \tag{26}$$

where ℓ_p is the pin length required outside shim pack to connect the mating fixture.

As a structural member, the total length of the composite tube is fixed. An increase in the joint length naturally causes a decrease in the uniform section portion of the composite tube. Consequently, the increase of weight due to longer joint length is partially compensated by a shorter basic tube section. Since the joint length is a design parameter, the total joint weight does not reflect the additonal weight superimposed to the tube.

For this reason the shim joint objective function is defined as:

$$W_o = W_{fg} + W_s + W_r + W_f + W_p - \frac{\pi}{4} (D_o^2 - D_i^2) L_j \omega_{fg} \tag{27}$$

which is the weight added to the structural member by the attachment.

U3 4802 1494 REV. 8-65

6.2.14.3 OPTIMUM DESIGN

Now the design problem may be stated as: to find the minimum of equation 27 subjected to the condition of equations 16 through 21. There are a number of directly applicable mathematical methods for the solution of this type problem. The method selected in this study was the steepest descent. The net attachment weight was taken as the objective function and the conditions equations 16 to 21 were treated as constraints. Then the objective function was minimized under the constraints.

The method used is a descent routine. Starting with an initial solution, steps are taken towards new points at which the value of the objective function is improved. The iteration process continues until a minimum is reached. (Reference b, p. 95)

The procedure described above has been programmed in Fortran IV to form a basic optimization routine. The routine has been successfully used for numerous design problems. When applied to the design of shim joints, the input consists of:

1. Number of design parameter, number of constraints.
2. Limit of interative cycles.
3. Initial step length.
4. Tolerance range for each constraint.
5. Applied load.
6. Tube geometry.
7. Mechanical properties of materials.
8. Design constraints.
9. Initial design parameters.
10. Optimal information.

If allowable stress is expressed as a function of design parameters, it is convenient to incorporate allowable stress expressions in the program. The program output consists of:

1. Design parameter.

USE FOR TIME ONLY IN MATERIAL ONLY

2. Information concerning any violation of constraints.

3. Direction of movement.

4. Weight of each shim joint component.

5. Value of the objective function.

The program was executed on an IBM 360/44 computer. Artificial constraints may be added to improve convergence. For example, the minimum practical values of a, t_s and t_r may be treated as artificial constraints. For six design variables and eleven constraints (including artificial constraints for convenience) the average running time was five to six minutes. It was observed that usually after twenty-five iterations the variation of objective function was in the order of one thousandth of a pound. It was also observed that different sets of reasonable initial conditions all lead to practically identical objective function and design parameters. For all practical purpose the objective function obtained in twenty-five iterations may be taken as the minimum and the corresponding design parameters the optimum design.

6.2.1.4.4 EXAMPLE

The optimization procedure was used to design the tubular joint for the final structural test of this program. The design allowable expressions obtained from the flat plate data were used in the constraint equations 16 through 21. The design was performed with the following parameters fixed:

D_o = 3.0 In. D_i = 2.928 In.

D_{oj} = 3.095 In. D_{ij} = 2.833 In.

D_{op}/D_{ip} = 0.8

F_{tu} = 260 ksi F_{su} = 110 ksi

t_a = 0.009 In. t_c = 0.006 In.

ω = 0.074 Lb./In.^{3}

ω_s = 0.283 Lb./In.^{3} ω_f = 0.040 Lb./In.^{3}

USE FOR TYPEWRITTEN MATERIAL ONLY
U3 4802 1434 REV. 8-65

NO. OF PINS	Dop in.	ℓ in.	a in.	Jt in.	t_s in.	tr. in.	OBJECTIVE FUNCTION LB.	TOTAL JOINT WEIGHT LB.
8	.549	.685	.686	.461	.021	.014	.429	.518
9	.519	.680	.681	.447	.019	.009	.389	.477
10	.491	.702	.667	.424	.017	.012	.369	.457
11	.468	.722	.661	.409	.016	.010	.343	.434
12	.448	.740	.663	.414	.017	.013	.373	.481
13	.431	.753	.664	.422	.019	.023	.414	.502

RESULTS OF PIN NUMBER
VARIATION STUDY

Table 1:

$N_s = 5.0$ $N_c = 2.0$

$P_{ult} = 150$ k

With exception of N_p (number of pins), the remaining design parameters were allowed to vary in the optimization routine.

The routine does not handle discrete variables and it was impractical to treat N_p as a continuous variable. To determine the optimum number of pins, the number of N_p was varied in consecutive runs having otherwise identical input. The resulting joint designs are shown in Table I. The table includes both, a) the weight added to the basic tube by the reinforcement and pins(objective function) and b) the total weight of the joint section. The pins were considered to be hollow and made from 180 ksi ultimate tensile strength steel.

The objective function is plotted as a function of N_p in Figure 6.2.1-9. As the plot indicates, the eleven pin configuration is clearly the optimum one for the specified problem.

6.2.1.4.5 EFFICIENCY OF THE SHIM JOINT CONCEPT

A comparison can be made by studying a composite tube having shim joints with tubes of other materials designed to meet the same loading requirement. In Figure 6.2.1-10 the weights of constant strength tubes have been plotted versus tube length. The metal tubes are assumed to have identical strength in tension and compression. Two curves are shown to reflect the different tensile and compressive strengths of $5,0^{\circ}:1,90^{\circ}$ fiber glass. Thin wall buckling and column buckling are not considered. The fiber glass tube weights include 0.7 pound to reflect the weight added to both ends of the tube by the minimum weight eleven pin attachment of the previous section.

Examination of Figure 6.2.1-10 reveals that for design governed by tensile strength, fiber glass tubes are more efficient than aluminum for tube length of 5.0 inches or larger and lighter than steel or titanium for tube lengths exceeding 7.5 inches. If compressive strength governs the tube design, fiber

USE FOR TYPEWRITTEN MATERIAL ONLY

U3 4802 1494 REV. 9-65

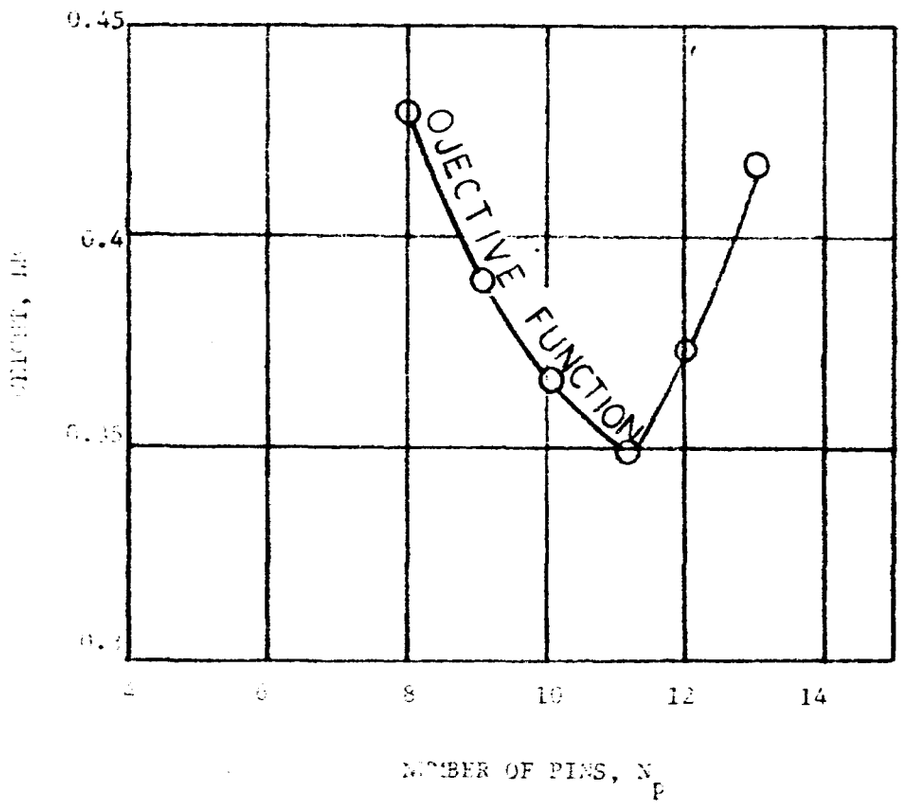

INCREASE IN WEIGHT OF STRUCTURAL MEMBER DUE TO JOINT VS. NUMBER OF PINS USED IN JOINT

Figure 6.2.1-9:

USE FOR DRAWING AND HANDPRINTING — NO TYPEWRITTEN MATERIAL

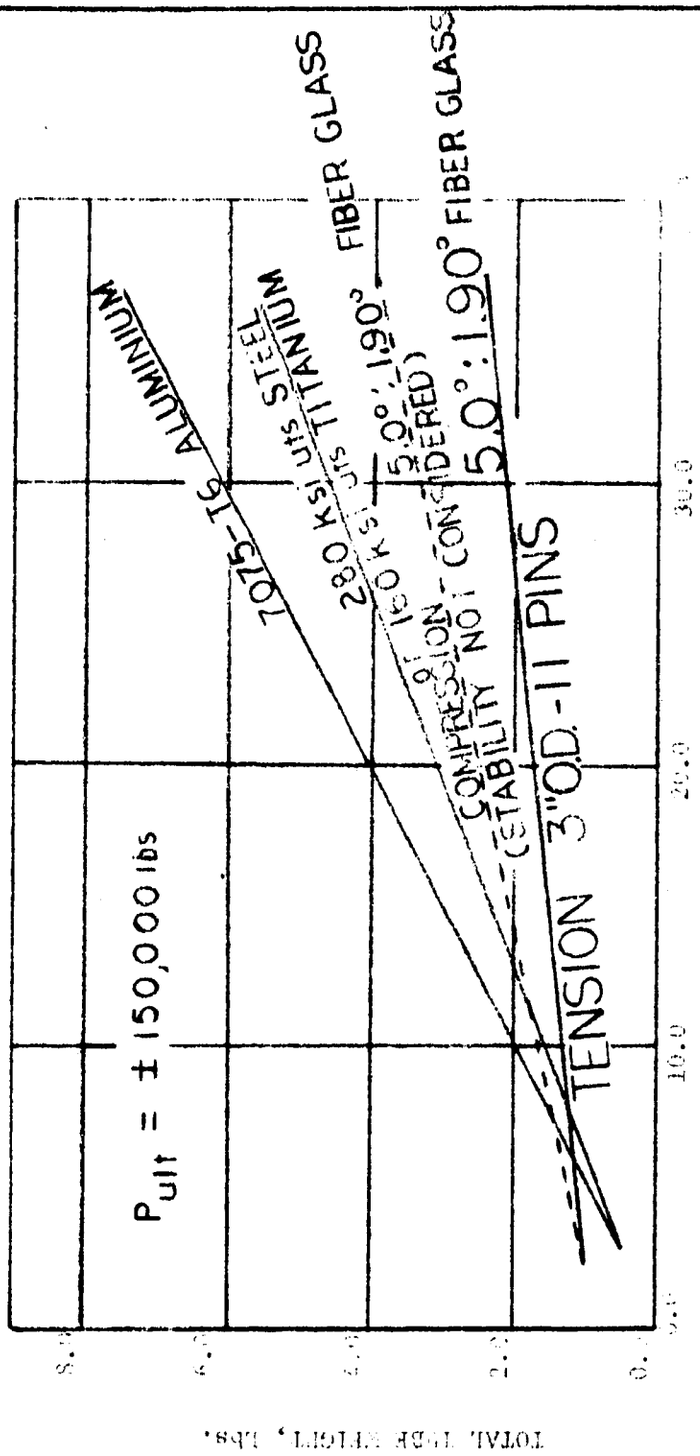

WEIGHT COMPARISON OF CONSTANT STRENGTH TUBES VS. TUBE LENGTH

Figure 6.2.1-10

glass is more efficient than aluminum for lengths greater than 6.5 inches, and lighter than steel or titanium tube lengths exceeding 12.0 inches.

6.2.1.5 MATERIALS AND FABRICATION

Materials

The filament composite materials employed in this study consisted of AF-994 glass filaments and Shell Chemical Company's 58-68R resin system.

The metal shim was made of AM-335 steel coil, eight inches wide, 0.02 inch thick, and of continuous length. The shim cleaning procedure employed was originally developed and reported in Reference e.

The bond between the corrosion resistant steel shims and the filament composite material was provided by a structural adhesive. Two types of adhesives were evaluated. The first was BR-1009-49 tack primer as supplied by the American Cyanimid Corporation, and the second was AF-111 structural adhesive fiber furnished by the 3M Corporation. BR-1009-49 tack primer was utilized during the early phase of the program. A primer coating of uniform thickness of approximately 0.005 inch was obtained, and was oven cured for 60 minutes at 315°F. AF-111 structural film was utilized during the later phase of the program. The adhesive film was applied to the steel shim and stored at 40°F until ready for use.

Holes were drilled through the fiber-resin-shim-composite to permit insertion of shear pins. Carbide-tipped or full carbide drills were used. Holes larger than 0.250 inch diameter can be drilled in successive steps of approximately 0.375 inch diameter increase per step.

6.2.1.5.1 FLAT PLATE SPECIMENS

The flat plate filament composite specimens utilized in this program were specially wound on a winding machine. The test specimens were wound over twelve-inch by two-inch aluminum mandrels.

USE FOR TYPEWRITTEN MATERIAL ONLY

U3 4P02 1434 REV. A-69

Guide blocks were provided on one end of the mandrels to facilitate locating the metal shims as they were wound into the ends of the specimens. Two specimens were wound simultaneously by utilizing both sides of the mandrel. The wrapped mandrels were then cured for four hours at 350°F. The specimens were removed from the mandrel by cutting the glass composite along the edges with a high speed cutting disk. The sides and ends were trimmed with a hand saw and flat plate disk sander.

6.2.1.5.2 TUBES

Open end cylinders were fabricated two at a time by winding a double length cylinder and then cutting it into two cylinders. The cylinders were wound over mandrels machined from salt block which was later removed by dissolving in hot water. Thin corrosion resistant steel shims, in the form of narrow circumferential bands, were wound into the cylinders on each side of the planned cut which would separate the two cylinders. Subsequent to removal of the salt mandrel, a circumferential row of holes was drilled through the wall of each cylinder in the shim area for later insertion of shear pins.

6.2.1.6 STRUCTURAL TEST

6.2.1.6.1 TEST FIXTURES

Ultimate strength testing of the final tubular joint design required the fabrication of two separate test fixtures. One fixture is a clevis-type which mates with the reinforced attachment area of the tube to form the pin joint. The fixture was fabricated in two pieces to avoid the expensive machining which would be required by a monolithic assembly. The two pieces were held tightly together by a nut during drilling of the pin holes. The nut was used to insure that equal loads would be applied to the pins on the inside and outside diameter of the tube.

The second test fixture (Reference b, pp 97-100) held the opposite end of the tubular specimen which was reinforced only by four additional layers of filament material. The fixture employed a friction gripping technique. A schematic

USE FOR TYPEWRITTEN MATERIAL ONLY

U S AFSC 1494 REV. 8-61

USE FOR DRAWING AND HANDTRANSING — NO TYPEWRITTEN MATERIAL

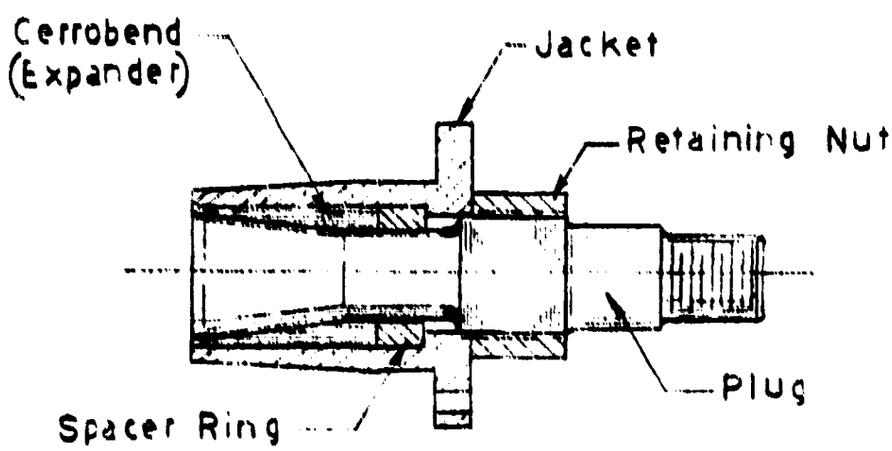

Figure 6.2.1-11: TENSION FIXTURE ASSEMBLY

of the fixture is shown in Figure 6.2.1-11.

6.2.1.6.2 TENSION TEST OF TUBULAR JOINT

A 3.0 inch outside diameter tube was fabricated with steel reinforced end to test the shim joint concept in a full scale structural member. The test specimen was designed to fail in the attachment area since the program is oriented to refinement of shim joint design technology. The basic tube was fabricated with a 5,0°: 1,90° wrap pattern to a wall thickness of 0.072 inches. The ultimate tensile load for the tube was found to be 150 kips (Reference c, pp 2-19). The specimen was loaded in an Olsen Machine to an ultimate tension load of 135.5 kips. Fracture occurred in the outer fiber glass layer at the edge of the outside shim. It is felt that both the test fixtures and the shim joint did perform well.

6.2.1.6.3 COMPRESSION TEST OF TUBULAR JOINT

The tension clevis fixture and the jacket of the friction grip fixture was used to conduct the compression test. A cerrobend plug was cast to reinforce the inside diameter of the nonreinforced tube end. The test specimen was identical to the tension specimen. The ultimate compressive load for the tube was found to be about 51.0 kips. The attachment area suffered no discernible damage.

6.2.1.7 CONCLUSIONS

The following conclusions may be made:

1. Design parameters can be optimized conveniently by the structural synthesis approach in determining the minimum weight configuration.

2. The shim joint concept can be successfully applied to composite members without prohibitive attachment weight penalties.

6.3 REFERENCES

a. Thiokol Chemical Corporation, Wasatch Division, "Design of a Filament Wound Segmented Motor Case." Technical Report No. AD406679, DDC, April 1-3, 1963, AIAA Launch and Space Vehicle Shell Structures Conference, Palm Springs, California.

USE FOR TYPEWRITTEN MATERIAL ONLY

US 4802 1434 REV. 8-59

b. Cole, B.W., Wong, J.P., and Courtney, A.L., "Development of the Shim Joint Concept for Structural Members," Technical Report No. AFFDL-TR-67-116, August 1967, Air Froce Flight Dynamics Laboratory, Wright-Patterson Air Force Base, Ohio.

c. The Bendix Corporation, Products Aerospace Division, "Exploratory Application of Filament Wound Reinforced Plastic for Aircraft Landing Gear," Technical Report No. AFML-TR-66-309, December 1966, Air Force Materials Laboratory, Wright-Patterson Air Force Base, Ohio.

d. Thiokol Chemical Corporation, Wasatch Division, "Large Segmented Fiber Glass Reinforced Plastic Rocket Motor Cases," Report No. ASD-IR-8-150, Vol. I through VIII, Air Force Materials Laboratory, Wright-Patterson Air Force Base, Ohio.

e. Goland, M., and Reissner, E., "The Joint Stresses in Cemented Joints," Journal of Applied Mechanics, March 1944.

f. Melcon, M.A., and Hoblit, F.M., "Analysis of Lugs and Shear Pins," Product Engineering, May 1950 and June 1953

g. "Mechanics of Adhesive Bonded Lap-Type Joints: Survey and Review," Report No. ML-TDR-64-298, 1964, Forest Product Laboratory, U.S. Department of Agriculture, Madison, Wisconsin.

h. "Manufacturing Methods for Plastic Airframe Structures by Filament Winding," Technical Report No. IR-9-371(1), February 1967, Air Force Materials Laboratory, Wright-Patterson Air Force Base, Ohio.

i. Ridha, R.A., and Wright, R.N., "Minimum Cost Design of Frames," Hournal of Structural Division, Procedings ASCE, Vol. 93, ST4, August 1967, Paper No. 5394.

USE FOR TYPEWRITTEN MATERIAL ONLY

U3 4802 1434 REV. 8-65

7.0 JOINT CONSIDERATIONS FOR REDUCED SCALE MODEL VEHICLES

7.1 The use of scale model replicas for vehicle structural dynamics studies can provide the designer with valuable information on proposed designs early in their development cycle. By their use, structural modifications and payload changes can be evaluated without expensive full-scale construction and testing, particularly for the large, complex vehicle.

This Section discusses the 1/10 scale structural replica of the Apollo/Saturn V and is intended to provide designers with some insight to the compromises which can dictate deviations from true replica reproduction in the area of missile joints.

The decision to provide a scaled-down replica of the prototype joint, or to simulate it by its dynamic and dampening equivalent is dictated by the following considerations:

a. Present fabrication practices and limitations.

b. Access requirements unique to the model.

c. Assembly problems created by the size reduction.

d. Requirement for equivalent dynamic properties.

e. Fabrication properties of alternative alloys.

f. Size of scaled-down fastener components.

g. Economic alternatives of simulation vs scale duplication of the joint.

7.1.1 Structural Joints

7.1.2 The joint illustration in Figure 7.1.2-1 is typical of a design variation required to permit assembly of the structural components. This joint depicts the S-IV-B aft-bulkhead-common-bulkhead joint. In full scale (Figure 7.1.2-1a), the fabrication is by rivets and welds. The 1/10 scale model permits the final closure to be effected externally. The bulkhead structure near the joint was

U3 4802 1434 REV. 8-65

USE FOR TYPEWRITTEN MATERIAL ONLY

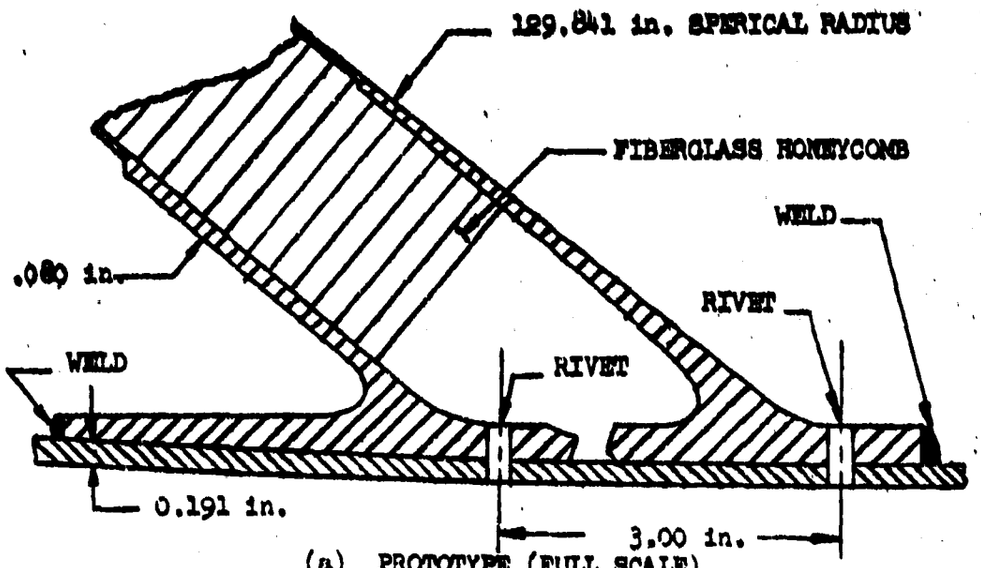

(a) PROTOTYPE (FULL SCALE)

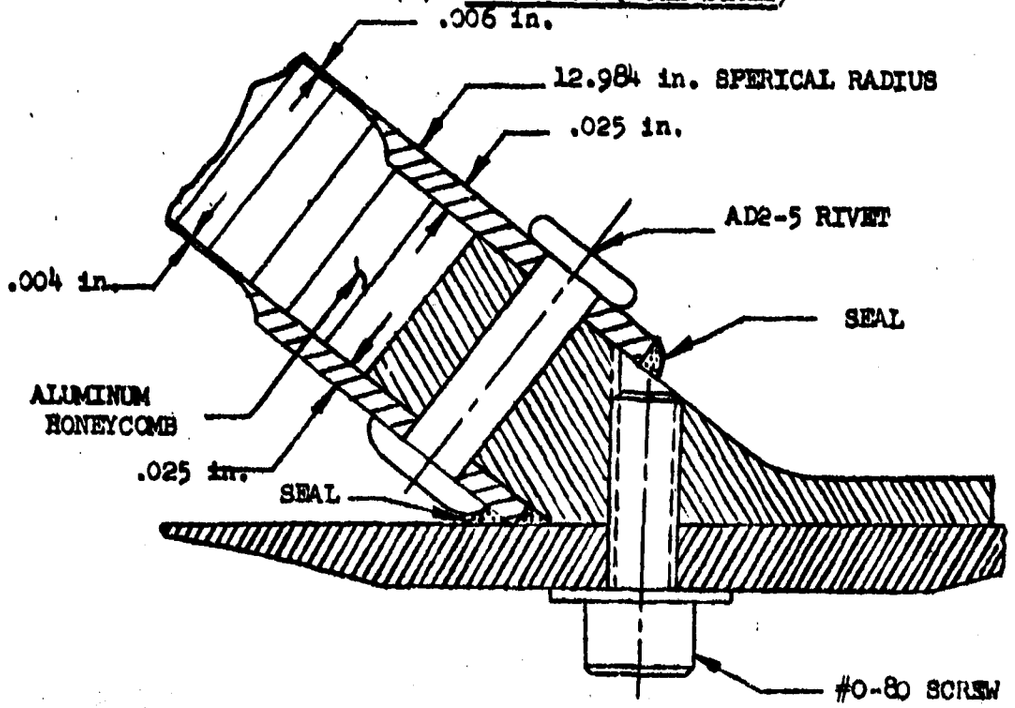

(b) 1/10 - SCALE MODEL

FULL SCALE PROTOTYPE & 1/10 SCALE MODEL S-IVB COMMON BULKHEAD

FIGURE 7.1.2-1

USE FOR DRAWING AND HANDPRINTING—NO TYPEWRITTEN MATERIAL

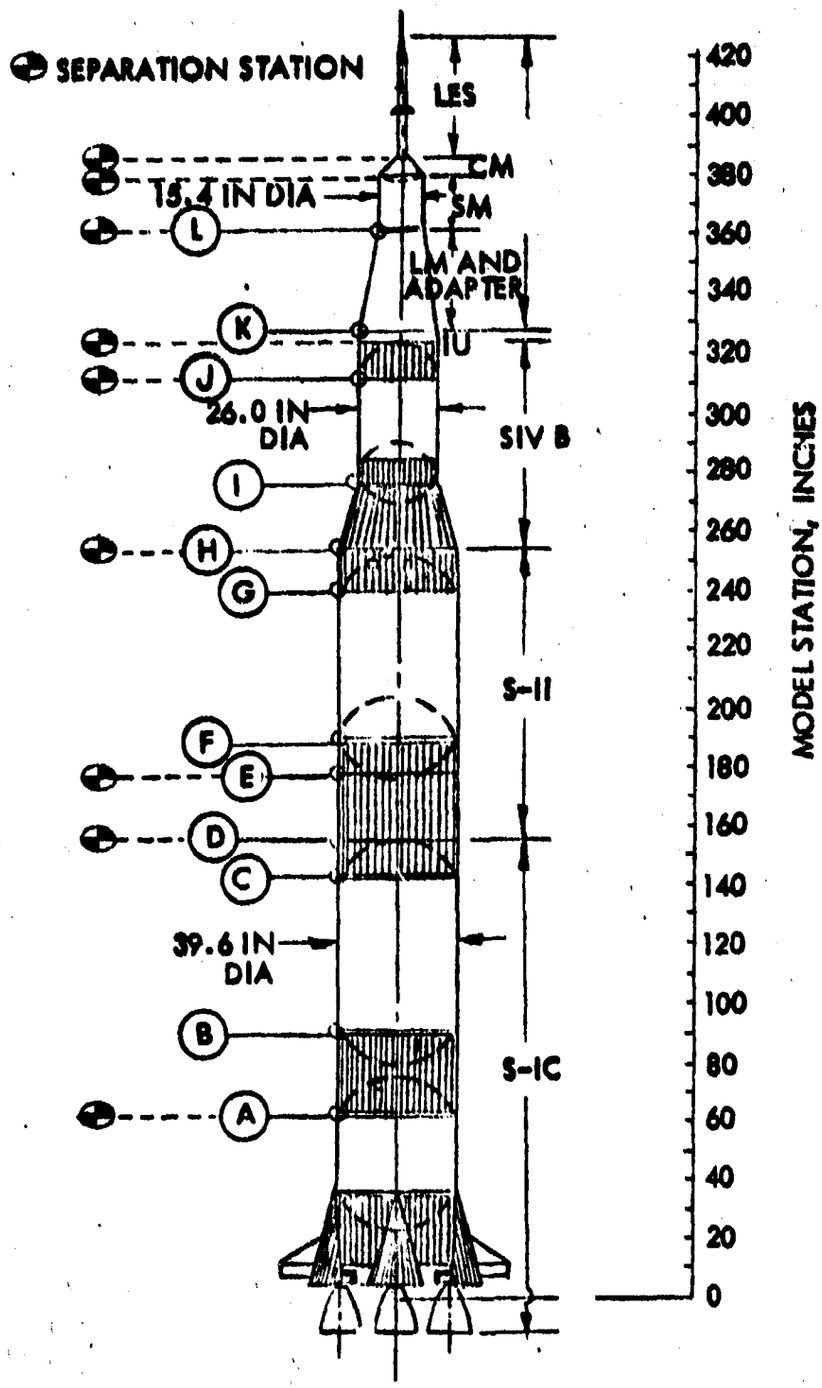

SCHEMATIC OF 1/10 - SCALE APOLLO/SATURN V MODEL

FIGURE 7.1.3-1

USE FOR DRAWING AND HANDPRINTING—NO TYPEWRITTEN MATERIAL

7.1.2 (Continued)

locally modified by adding a relatively heavy adapter ring to which the bulkhead was riveted. This ring was then bolted to the skin from the outside and a bead of sealant compound applied at the intersection of the common bulkhead and the LH_2 tank wall. The resultant joint therefore, is not a true representation of the full-scale component.

7.1.3 An indication of the degree to which the prototype is duplicated is indicated by examination of the joints of Figure 7.1.3.2 The location of the joints detailed in this Figure is shown on Figure 7.1.3-1 by the lettered circles on the left side of the model drawing. The joints of Figure 7.1.3-2 carry corresponding letter identifications.

7.1.3.1 Figure 7.1.3-2a is the junction of the S-IC fuel tank and the intertank section. The fuel-tank upper bulkhead, the fuel tank wall, and the intertank section are joined by a Y-ring assembly. There exists a deviation from replica scaling in that one leg of the Y-ring is attached by a bolted flange to allow access to the intertank interior areas. The intertank Y-ring connection is an unusual joint, made necessary by the complex corrugated intertank skin, and consists of channeled strips attached alternately to the inside and outside surfaces of the Y-ring leg from the corrugated intertank surface.

A similar joint (Figure 7.1.3-2b) is used at the intersection of the lower LOX tank-bulkhead-LOX-tank-wall and intertank structure. This joint, however is closed by a weld rather than by the bolted flange connection. At the junction of the S-IC LOX tank upper bulkhead and tank-wall- forward-skirt interface shown in Figure 7.1.3-2c, a variation was utilized in the model structure. In order to complete the final weld in the joint, the Y-ring was fabricated in two pieces and the shorter leg was spotwelded to the locally thickened forward-skirt skin. The closure was then effected by an external weld. The resultant hardware has the

USE FOR TYPEWRITTEN MATERIAL ONLY
U9 4802 1434 REV. 8-65

USE FOR DRAWING AND HANDPRINTING — NO TYPEWRITTEN MATERIAL

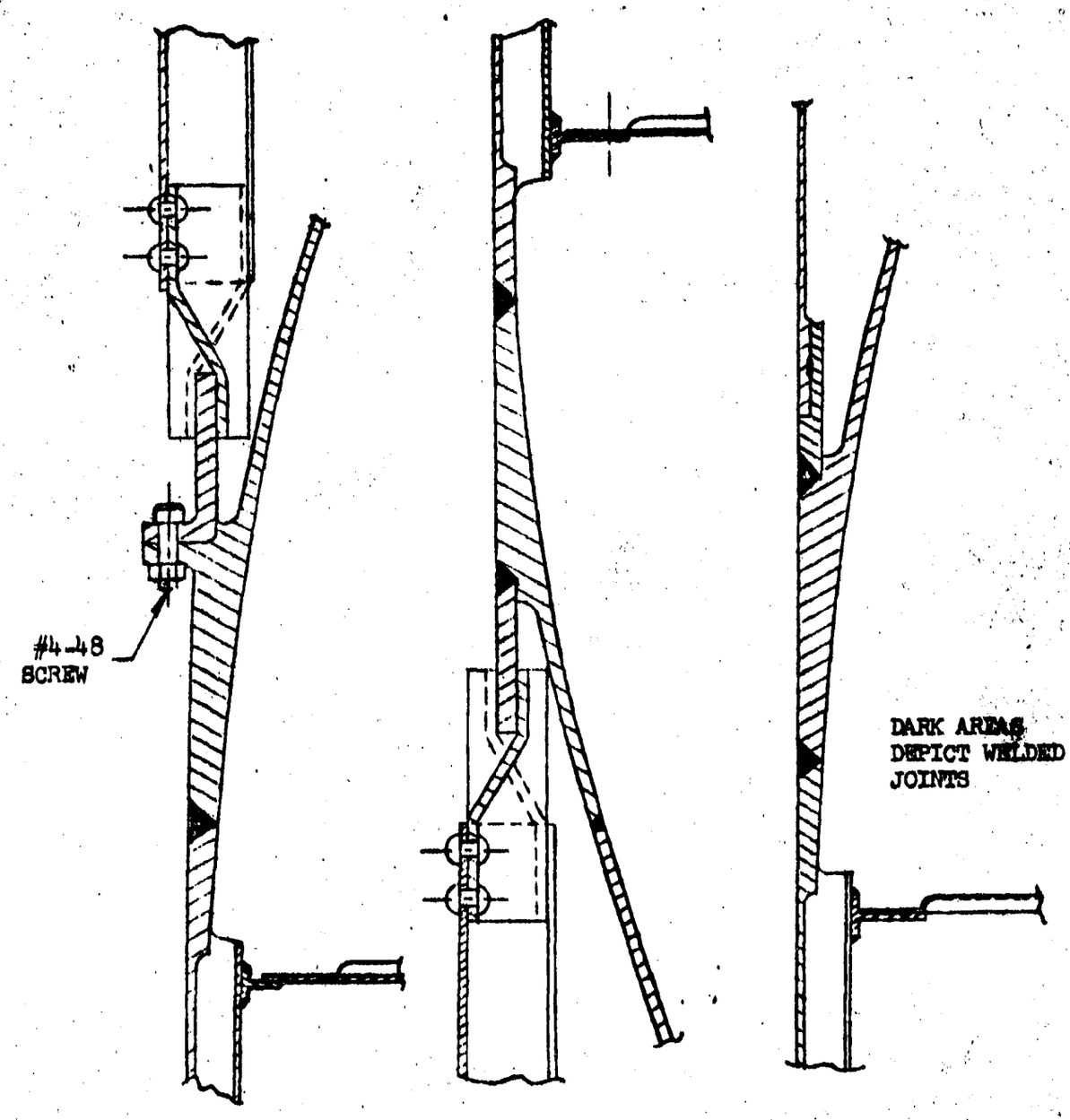

(a) JOINT A* (b) JOINT B* (c) JOINT C*

*Ref Figure 7.1.3-1 and
Paragraph 7.1.3-1

FIGURE 7.1.3-2

7.1.3.1 (Continued)

same basic dimensional properties as would have resulted from direct geometric scaling.

7.1.3-2 The model joints shown in Figures 7.1.3-2d and 7.1.3-2e are scaled duplicates of prototype joints with the exception that the number of fasteners used in the model is less than the number required onthe prototype. The fasteners however, are sized so that the total fastener area was a scaled quantity. The application of replica scaling to the joint of 7.1.3-2d was judged to be the most expedient approach since considerable engineering time would have been required to properly design a more easily manufactured connection with comparable dynamic properties. Further, the scaling laws applicable to a joint of this type are not sufficiently defined to permit evaluation of any alternate design, particularly the effect of the pinned-truss ring frame braces.

7.1.3-3 The remaining structural joints of Figures 7.1.3-2b through 7.1.3-2L are essentially scaled duplicates of the full-scale structure except for deviations in ring-frame and bulkhead construction dictated by fabrication time and cost considerations. The alternative design approach permitted the use of manufacturing procedures which produced geometrically similar structural components with fewer and less intricate machine processes. The resultant structures have the same structural dynamic properties as the more complex exact miniturizations of the full scale structure.

7.2 Fabrication Problems

7.2.1 Other fabrication problems, not classified as design deviations, include machining processes, metal forming procedures, machine and chemical milling tolerances, fastening methods, and welding techniques. Not only can the solution of these problems dictate the degree to which a given launch vehicle can be reproduced to a specified reduced scale, but they also can be significant factors in

USE FOR TYPEWRITTEN MATERIAL ONLY

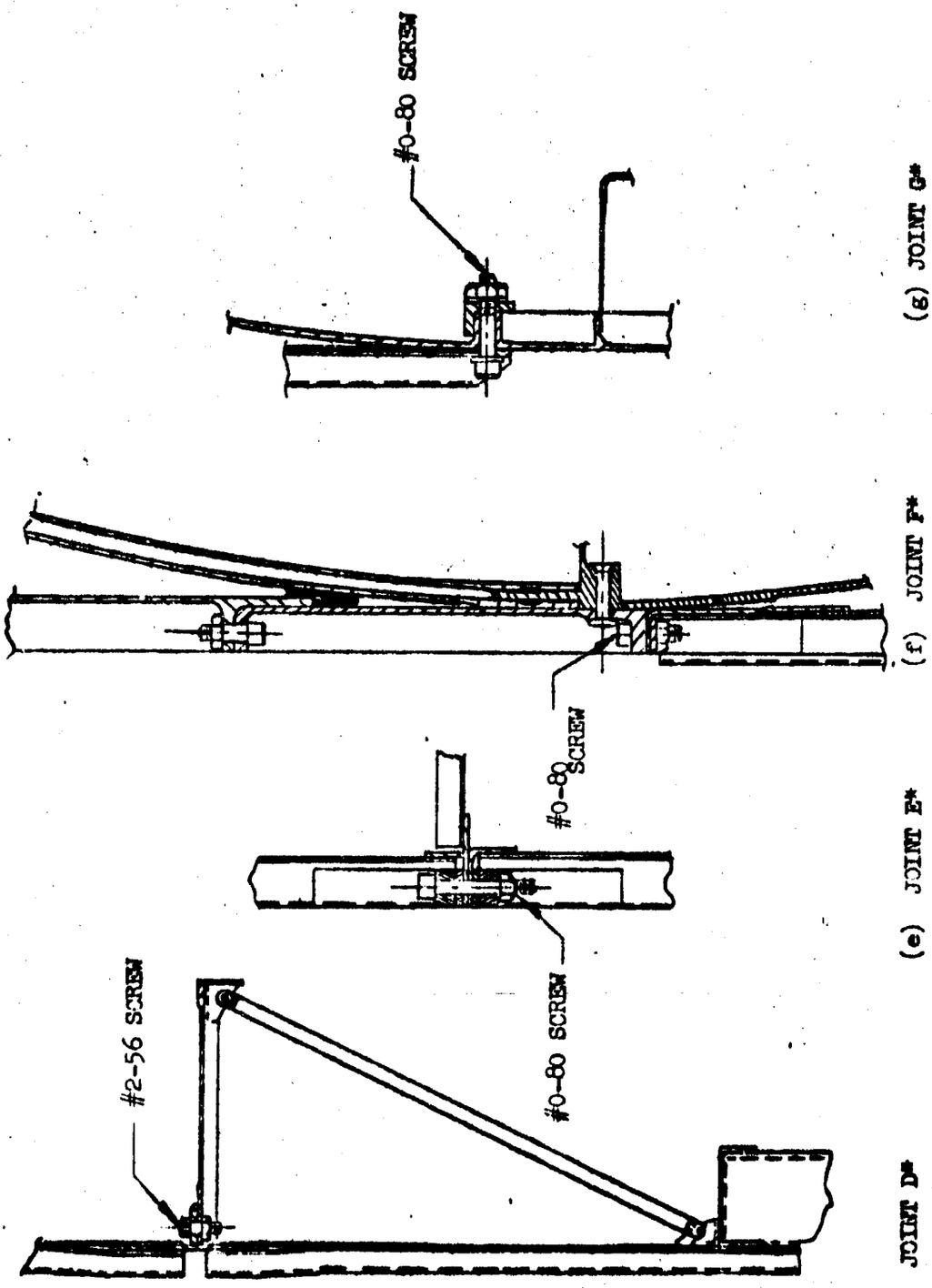

(d) JOINT D*

(e) JOINT E*

(f) JOINT F*

(g) JOINT G*

*Ref Figure 7.1.3-1 and Paragraph 7.1.3-2

FIGURE 7.1.3-2 (Cont.)

USE FOR DRAWING AND HANDPRINTING — NO TYPEWRITTEN MATERIAL

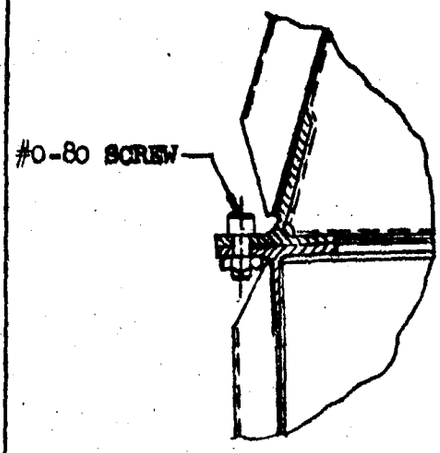

(h) JOINT H*

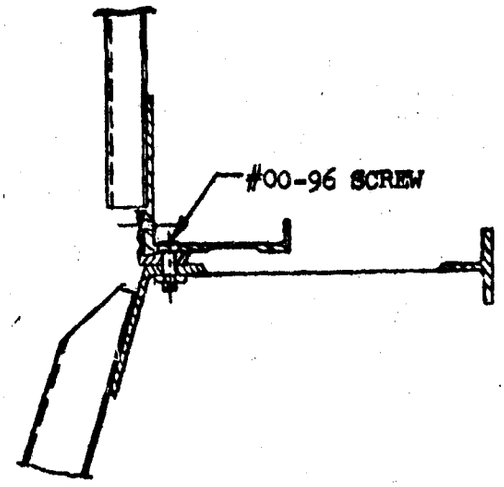

(i) JOINT I*

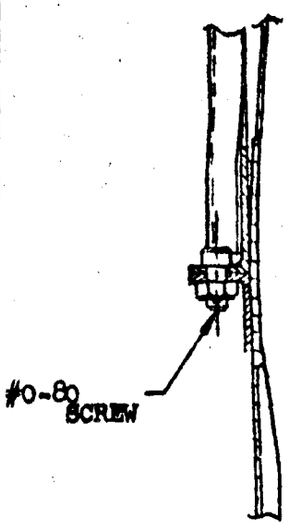

(j) JOINT J*

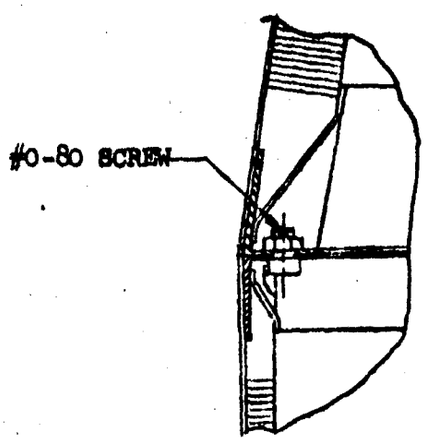

(k) JOINT K

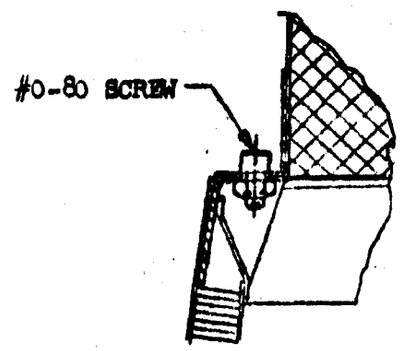

(l) JOINT L*

*Ref Figure 7.1.3-1 and
Paragraph 7.1.3-3

FIGURE 7.1.3-2 (Cont)

USE FOR DRAWING AND HANDPRINTING — NO TYPEWRITTEN MATERIAL

7.2.1 (Continued)

establishing the economic feasibility of a cquiring a dynamic model such as the 1/10 scale Apollo/Saturn V. If the resulting fabrication limitations are practical, it may be possible to duplicate the full-scale structure at a predetermined reduced size at less cost than would be needed to simulate the structure by employing corresponding expensive engineering time.

A factor found to be beneficial for fabricating the model joints included methods employed to make the required assembly attachments. The full-scale joints were fabricated with appropriate weldments, bolts, nuts and rivets. Obviously the components of the smaller model must be assembled by other methods because of the impracticability of the reduced scale attachment hardware. There must be a compromise both in type and the number of simulated fasteners. Also, it is generally accepted that whenever an effort is made to approximate the structural dynamic properties of a complex structure, the detail design of the joints and attachment hardware should be conservative with a resulting excessively stiff component since any effort to scale directly the size and number of bolts and rivets would be impractical both from a manufacturing and assembly viewpoint.

In addition, although it is true that there can be some conservative distortion of the joint stiffness properties, there can be little hope of achieving any degree of success in reproducing desired damping characteristics when rivets and bolts are replaced by spot welds. Generally, bolted joints can be represented by using convienient, commercially available fasteners, such as 0-80 screws, a lesser number of fasteners being used, the number of which is determined from the correctly scaled fastener area. This design approximates the proper stiffness and damping.

USE FOR TYPEWRITTEN MATERIAL ONLY

U3 4802 1434 REV. 8-65

7.3 Conclusions

7.3.1 Replica scaling of the main load carrying structural joints, which together with other structural components, necessitated an extension of the state-of-the-art in fabrication techniques, was employed and resulted in a model which duplicates the full-scale structure to a high degree. Extreme full scale design details, such as joint reproduction, were duplicated in the fabrication of the 1/10 scale model.

A careful analysis of the prototype structural details was required to ascertain the practical and economic feasibility of duplicating component hardware to the chosen scale factor. Where model joint design dictated sizes too small to be duplicated, an acceptable design required that only the correct mass and stiffness distributions be retained in the model. Some joints could not be adequately defined by the most rigorous present-day dimensional analysis and therefore were built as scaled duplicates of the full scale members. If the joints were of secondary importance from a dynamic viewpoint, they were a scaled replica because they required less expenditure of effort with duplicate fabrication than with dynamic simulation. All substitutions were carefully considered, however, lest their inclusion degrade the usefulness of the total structure through either introduction of misleading response data or the suppression of critical responses.

With proper care in the selection of the scale factor and methods of manufacture and with judicious evaluation of deviations from direct scaled duplication, the replica models are considered technically and economically feasible for studies of the structural dynamic characteristics of large complex vehicles.

An in-depth description of the project is available in Reference 2, from which the information presented herein was derived.

USE FOR TYPEWRITTEN MATERIAL ONLY

U3 4802 1434 REV. 8-65

REFERENCES

1. D2-11165 - Structural Development Note #9 - Sandwich Material, Rev. 3-31-58
Presents design criteria and allowables for structural design and stress analysis of sandwich components for aircraft application. Provides background in this type of construction for designers.

2. NASA TN D-4138 - Design And Fabrication Considerations for a 1/10 - Scale Replica Model of the Appolo/Saturn V.
(ASTIC 056062)

USE FOR TYPEWRITTEN MATERIAL ONLY

U3 4802 1434 REV. 8-65

8.0 DOCUMENT OPTION FOR FUTURE WORK

8.1 Originally planned as a one year effort, the joint study was reduced by six months due to bedgetery and manpower requirements. While it is recognised that a great deal more information might be included in this document, it is felt that in its present form it provides a useful tool to the designer faced with the problem of missile or space vehicle joint design.

Should a decision be forecoming to continue the effort, the immediate direction taken will be to investigate raceway and other non-structural joints. Follow-on effort will be a report on the latest state-of-the-art in joint design concepts, missile carrier interface joints, joint fastener hardware, plumbing and electrical joint interfaces and recent advances in materials and process technology as applied to missile joints.

USE FOR TYPEWRITTEN MATERIAL ONLY

U3 4802 1434 REV. 8-65

ACTIVE SHEET RECORD

SHEET NUMBER	REV LTR	ADDED SHEETS: SHEET NUMBER	REV LTR	ADDED SHEETS: SHEET NUMBER	REV LTR	SHEET NUMBER	REV LTR	ADDED SHEETS: SHEET NUMBER	REV LTR	ADDED SHEETS: SHEET NUMBER	REV LTR
i						41					
ii						42					
iii						43					
iv						44					
v						45					
1						46					
2						47					
3						48					
4						49					
5						50					
6						51					
7						52					
8						53					
9						54					
10						55					
11						56					
12						57					
13						58					
14						59					
15						60					
16						61					
17						62					
18						63					
19						64					
20						65					
21						66					
22						67					
23						68					
24						69					
25						70					
26						71					
27						72					
28						73					
29						74					
30						75					
31						76					
32						77					
33						78					
34						79					
35						80					
36						81					
37						82					
38						83					
39						84					
40						85					
						86					

ACTIVE SHEET RECORD

SHEET NUMBER	REV LTR	ADDED SHEETS				SHEET NUMBER	REV LTR	ADDED SHEETS			
		SHEET NUMBER	REV LTR	SHEET NUMBER	REV LTR			SHEET NUMBER	REV LTR	SHEET NUMBER	REV LTR
87						132					
88						133					
89						134					
90						135					
91						136					
92						137					
93						138					
94						139					
95						140					
96						141					
97						142					
98						143					
99						144					
100						145					
101						146					
102						147					
103						148					
104											
105											
106											
107											
108											
109											
110											
111											
112											
113											
114											
115											
116											
117											
118											
119											
120											
121											
122											
123											
124											
125											
126											
127											
128											
129											
130											
131											

REVISIONS			
LTR	DESCRIPTION	DATE	APPROVED