Low Density Parity Check Forward Error Correction For Your Telemetry Link

Kip Temple
Air Force Test Center, Edwards AFB CA

ABSTRACT

The telemetry standard IRIG 106 includes Low Density Parity Check forward error correction with six combinations of code rate and information block size. This correction code can be added to airborne telemetry links to increase link margin and correct random errors due to transmission anomalies. Given these benefits, why has this technology not been wholeheartedly accepted within the aeronautical mobile telemetry community? This paper will present the trade-offs when considering implementing LDPC in a telemetry link. Real-world flight test results will be presented clearly illustrating the benefits of forward error correction. The data presented will make a strong case for considering IRIG 106 compliant forward error correction in new link designs or to complement existing links in operation today.

KEY WORDS

Low Density Parity Check, IRIG 106, Spectrum Relocation Fund, Link Availability, Data Quality Metric, Tracking Error Second

INTRODUCTION

Forward error correction (FEC) in the form of Low-Density Parity Check (LDPC) codes has been in the IRIG 106 standards [1] for several years yet very few telemetry links utilize this capability. Perhaps this is because few understand the trade-offs associated with adding forward error correction to a telemetry link. Perhaps it is because real-world flight testing results illustrating gains in Link Availability have not been widely publicized. Or perhaps it is simply a case of the link designer not wanting to add additional complexity to their link. Whatever the case, this paper will explain the trade-offs when considering forward error correction coding. A link performance comparison is presented between uncoded and coded shaped offset quadrature phase-shift keyed (SOQPSK) during a controlled test through various real-world aeronautical mobile telemetry (AMT) transmission channels. Given the amount of data that was collected and the numerous ways to analyze comparative link performance, there is no way a complete analysis of the flight testing can be presented here. Instead, an example analysis is shown to illustrate the process that was followed for the data for each test point during the test flight. To conclude, Link Availability (LA) is presented clearly illustrating the benefits of forward error correction.

THE OPPORTUNITY FOR FLIGHT TESTING

Recent telemetry system upgrades at Edwards Air Force Base (EAFB) funded by the Spectrum Relocation Fund (SRF) program provided the opportunity to test many of the technologies standardized within IRIG 106. Upgrades included antenna feeds, telemetry receivers, receiver status monitoring, and multiband/multimode/coded airborne transmitters. The upgrades enable EAFB and the Ranges within the Western Area Test Complex the ability to support current and future telemetry systems operating in

DISTRIBUTION STATEMENT A. Approved for public release; Distribution is unlimited 412TW-PA-xxxxx

any telemetry band implementing any combination modulation scheme, Space-Time Coding (STC), and LDPC forward error correction. The focus of this test was on one variant of LDPC forward error correction as minimal flight testing has been done for this AMT technology [4][5].

FORWARD ERROR CORRECTION – LDPC

The correction code standardized within IRIG 106 falls under the general category of parity check codes described by Gallagher [2]. LDPC is a "block" code meaning that a block of information bits have parity added to them for transmission. This parity is then used to correct for errors in the information bits on the receive side of the link. The specific LDPC variant comes from the Consultative Committee for Space Data Systems "Orange Book" [3] which describes nine different LDPC codes with differing code rates ($^1/_2$, $^2/_3$, $^4/_5$) and information block sizes (1024, 4096, 16384). Based upon the type of transmission channel evident for AMT missions and analysis [6], the Telemetry Group (TG) within the Range Commanders Council (RCC) chose to standardize on three code rates and the shorter two block sizes [1]. This gives the telemetry link designer the option to trade bandwidth efficiency with coding gain.

The specific LDPC variant chosen for the flight test was **R**=$^4/_5$ (code rate), ***k***=1024 (information block size), ***n***=1280 (randomized code block size). This means for every 1024 information bits there are 1280 bits transmitted. The difference of 256 bits is the amount of parity added by the code. With ***k***=1024 the Attached Synchronization Marker (ASM) used for synchronizing each code block is 64 bits long. Why was this combination chosen? It offers the shortest information block size, least amount of coding gain, and the least amount of bandwidth expansion. An AMT user may find this combination of trade-offs the most attractive and easiest to transition to of the 6 available choices. Figure 1 illustrates this uncoded versus coded trade-off.

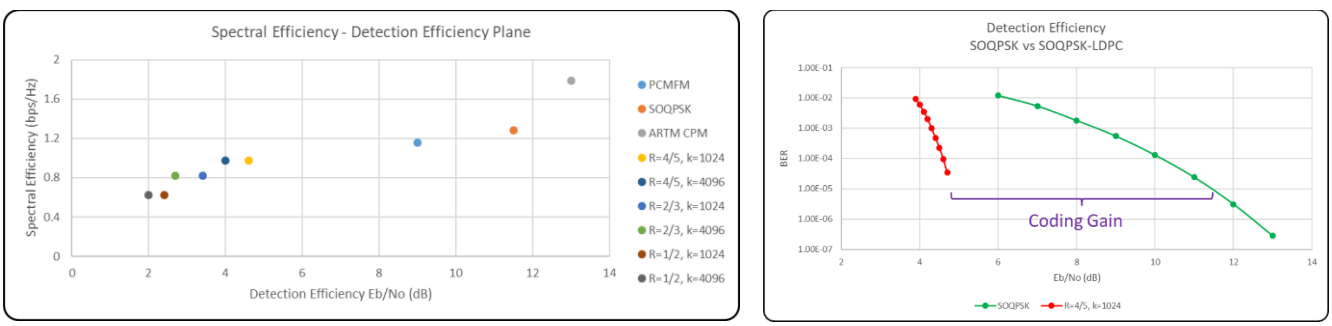

Figure 1 – Efficiency Plane, Detection Efficiency

The rate $^4/_5$ code in the standard has a bandwidth expansion factor of 21/16 meaning that an input bit rate of 5Mbps to the transmitter will have an over-the-air channel rate of (5Mbps)*(21/16) = 6.5625Mbps after the FEC code is added. The difference in "scheduled" bandwidth between the uncoded and coded links was 2MHz or 2, 1MHz wide telemetry channels. Typical coding gain for this selection (**R, *k*, *n***) is roughly 7dB when compared to uncoded SOQPSK at a bit error rate (BER) of $1x10^{-5}$. This is not a theoretical gain rather a measured gain with existing telemetry hardware available in the marketplace today. Measured data illustrating this gain is shown in Figure 1. By adding LDPC FEC, 7dB was added to the link margin for the coded link when compared against the uncoded link. Lastly, the shortest block length was selected due to the fading characteristics of the typical AMT channel. It is thought that if the ASM is missed due to a fading event it is better to lose a smaller block of information than a larger block.

FLIGHT TEST CONFIGURATION

This flight test program was designed to stress the telemetry links with channel conditions common to most test ranges. In order to provide a relative assessment, a reference signal was simultaneously transmitted during all of the testing. By transmitting reference (REF) and test (TEST) signals through the same aircraft antenna with equal transmit power during each flight many of the normal pitfalls when performing comparison testing during separate flights are negated. Minimum channel spacing recommendations in IRIG 106 were used for center frequency scheduling. This minimized the effect of differing transmission channel characteristics due to large differences in center frequencies. Data in the ground station was captured, recorded, and displayed to assess the performance of each link.

The aircraft was configured to transmit combined power level matched REF and TEST signals through a common bottom-mounted antenna. The REF signal used SOQPSK modulation, the generally accepted baseline for telemetry links in use today. The TEST signal used SOQPSK-LDPC, $\mathbf{R}=^{4}/_{5}$, $\boldsymbol{k}$=1024, $\boldsymbol{n}$=1280. The transmitters used internal data and clock with a pseudo random bit sequence (PRBS-23) clocked at 5MHz. The longer pattern is used to emulate encrypted data. The on-board telemetry system recorded time-stamped aircraft positional information used for determining ground antenna pointing errors. A block diagram showing both these configurations is shown in Figure 2.

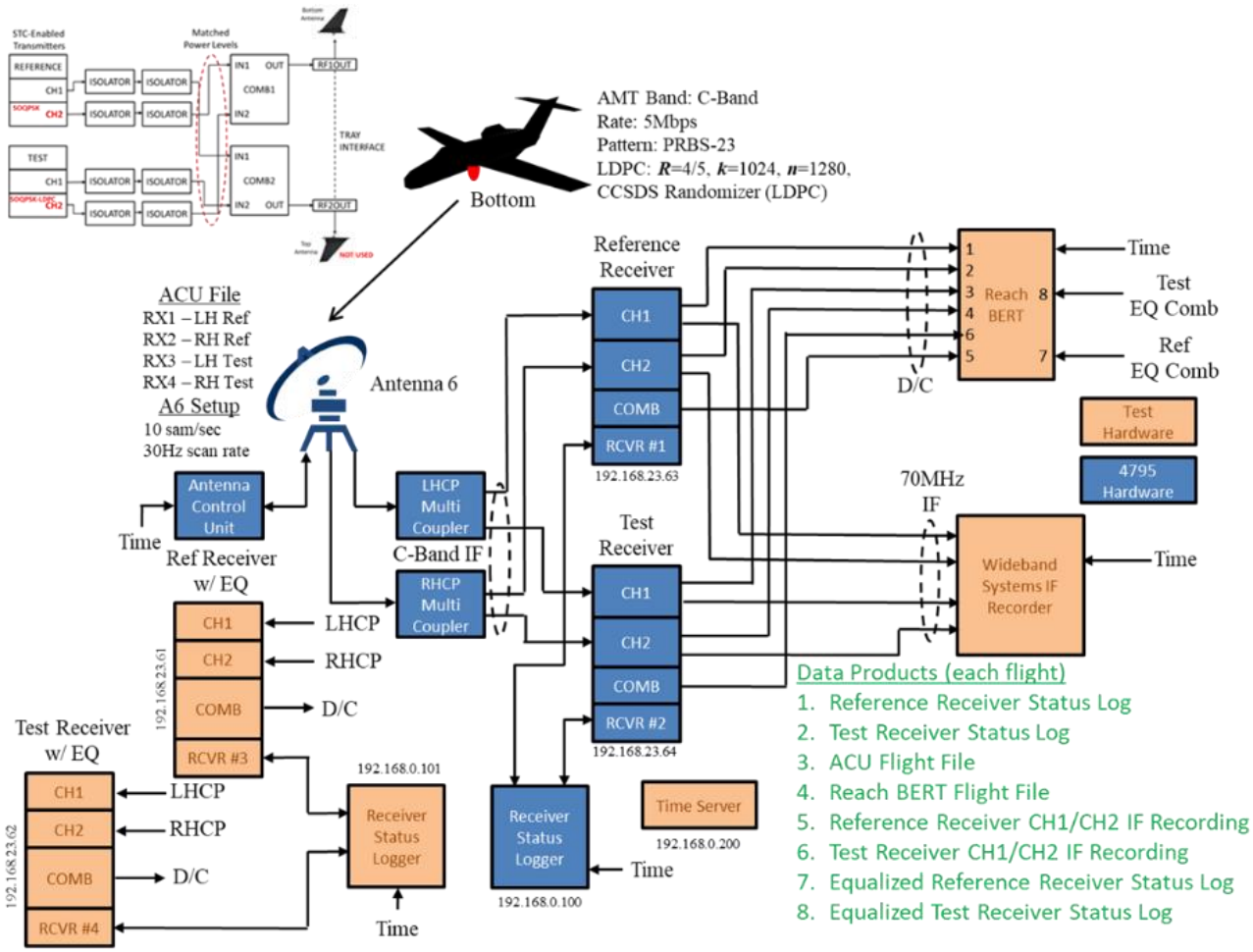

Figure 2 - Transmitter Tray and Ground Station Configuration

The ground station was an SRF-upgraded fixed receive site using a 10’ parabolic dish antenna. Four telemetry receivers were connected to the antenna via multi-couplers. The receivers were configured to maximal ratio combine (COMB) left-hand circular polarization (LHCP to receiver CH1) and right-hand circular polarization (RHCP to receiver CH2) resulting in three signals (LHCP, RHCP, COMB) each for the REF and TEST links. (The best channel selection option was enabled in each receiver resulting in a local best source selection in each receiver combined output.) To add to this baseline Range receive capability, two telemetry receiver status loggers, a bit error rate test set (BERT) with 8-channel capability, two intermediate frequency (IF) recorders, and a GPS-enabled network time server were added to capture and record the required information. The antenna control unit (ACU) log file was also recorded adding to the total flight test data package. The resulting data products were:

1. REF Receiver Status log (CH1, CH2, COMB) @ 1 sample per second
2. TEST Receiver Status log (CH1, CH2, COMB) @ 1 sample per second
3. Antenna Control Unit log @ 10 samples per second
4. BERT log @ 1 sample per second
5. Reference Receiver CH1 and CH2 IF Recording
6. Test Receiver CH1 and CH2 IF Recording
7. Aircraft positional information @ 1 sample per second

The geographic area around EAFB was used for three flight profiles designed to create three distinct transmission channels typical for AMT missions: a channel limited by multipath, one limited by noise, and one limited by the antenna transmission pattern from the aircraft. The channels are designed to stress both links and illustrate any gains (or losses) associated with the addition of forward error correction. These flight profiles along with the test point nomenclature are tabulated in Table 1. The test flight for comparing coded (**R**=$^4/_5$, ***k***=1024, ***n***=1280) and uncoded link performance occurred during Flight 213. Weather conditions were atypical for EAFB and did play a role in link performance. Before the mission the airfield was briefly closed due to fog and mist. During the test the airspace had scattered and broken clouds throughout the flight though no rain was present. The flight path for the flight test is shown in Figure 3. The REF signal was centered at 4405.5MHz with a power level of +24.6dBm and the TEST signal was at 4415.5MHz with a power level of +24.4dBm. Power levels were intentionally attenuated in order to ensure the REF link approached its maximum range during the long-range test points (point H1/H2). Transmitted power from the aircraft antenna was estimated to be close to the transmitter output levels as cable losses and antenna gain are roughly equal. The initial power level was determined through a link budget calculation but was adjusted during the test to achieve the desired maximum range for the REF link.

Table 1 – Flight Test Configurations

Aircraft Configuration				
Flight	**Reference Signal**	**Test Signal**	**Antenna Configuration**	**Reason for Test**
1 (F211)	SOQPSK-TG	ARTM CPM	Bottom Only	Modulation Mode Comparison
2 (F212)	SOQPSK-TG	SOQPSK-STC	Top & Bottom (50/50)	Antenna Pattern Mitigation Assessment
3 (F213)	SOQPSK-TG	SOQPSK-LDPC (**R**=4/5, *k*=1024)	Bottom Only	FEC Assessment
4 (F214)	SOQPSK-TG	ARTM CPM	Bottom Only	Finish Flight 1 (F211)
5 (F215)	SOQPSK-TG	SOQPSK-LDPC (**R**=1/2, *k*=4096)	Bottom Only	FEC Assessment

Test Points			
Point	**Description**	**Limiting Channel Condition**	**Flight Conditions**
M1/M2, M5/M6	Antenna Pattern Circle (10^0/50^0 Bank Angle)	Composite Antenna Pattern	13K’ MSL, 160 knots
C/D	Cords Rd (W-E, E-W)	Multipath	5K’ MSL, 200 knots
H1/H2	Isabella/Owens S-N, N-S	Noise	5K’-30K’, Best Climb, 160 knots

TELEMETRY LINK PERFORMANCE METRICS

Historically, two performance parameters have been used to characterize the performance of a telemetry link. First, any combination of receiver signal strength, automatic gain control (AGC) level, or estimated signal to noise ratio (SNR) was captured and plotted. Second, bit error statistics were captured and Link Availability was calculated [7]. How the receiver is reacting to channel anomalies via signal strength, AGC levels, or estimated SNR tells the experienced telemetry researcher many things about what is happening with the link. Typically not analyzed is the ground station antenna pointing error. An improperly pointed antenna during the testing affects link performance and calculated results. To capture the time the antenna is incorrectly pointed, a new metric is presented, Tracking Error Seconds (*TES*).

In order to provide a complete picture of link performance, receiver metrics are used that estimate the signal quality at the input of the receiver and at the output of the receiver. Estimated E_b/N_0 (ratio of signal energy per bit to noise spectral density in a 1Hz bandwidth defined as the carrier to noise ratio of the signal scaled by bandwidth and bit rate [9][10]) is an assessment of the SNR and data quality of the signal at the <u>input</u> to the receiver. Data Quality Metric (DQM) [8] places a numerical value to the quality of a packet of data on the <u>output</u> of the receiver. BERT data gives insight into link performance from a data consumer's perspective. To characterize this performance a Link Availability calculation (Eq. 1) is made. Link Availability is the single metric of system level link performance [7].

$$LA = \left[\frac{(T_M - (\sum SES + LT))}{T_M}\right](100\%) \qquad \text{Eq. 1}$$

where: T_M – measurement period
SES – Severely Errored Second, a one second interval in which the number of bit errors equal or exceed $\underline{1x10^{-5}}$ as if these errors were random
LT – Lost Time, number of bit periods in the measurement period that are not included in *SES* attributed to synchronization loss, BERT overload, and *TES*

Lastly, a tally of bit errors illustrates how channel anomalies affect the REF link and how the TEST link corrects some of these errors. The combination of these metrics will create a complete picture of how each link performed in each channel condition and provides the ability to directly compare and visualize the gain associated with the LDPC FEC on the TEST link.

FLIGHT TEST DATA ANALYSIS

<u>Data Analysis Procedure</u>
Flight data analysis starts with determining antenna pointing error. Ground station antenna pointing error (i.e. tracking error) is determined by using the aircraft time-stamped positional data, time-stamped antenna azimuth (Az) and elevation (El) pointing angles, and the rotational center of the antenna allowing a calculation of where the antenna should have been pointed versus time. These Az/El angles are then compared with the actual pointing angles available in the antenna ACU file. The difference in these angles are the pointing errors. The limit for error is the 3dB-half beamwidth for the antenna operating in lower C-Band. Each one second interval where Az or El error exceeds the error limit adds to the *TES* tally. Table 2 shows the total *TES* per test point for this testing.

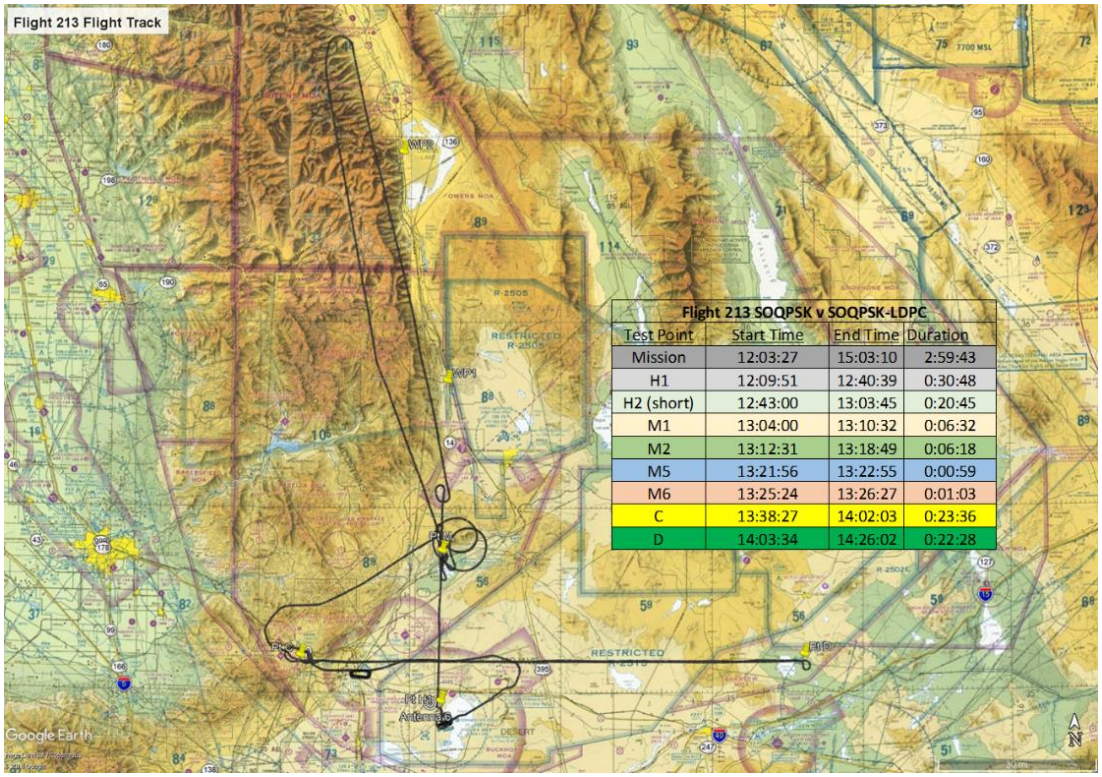

Figure 3 – Flight Path, Test Point Times

Table 2 – Tracking Error Seconds

Test Point	Tracking Error Sec	Duration (sec)
Mission	**1071**	**10783**
H1	**77**	**1848**
H2 (short)	**225**	**1245**
M1	**8**	**392**
M2	**0**	**378**
M5	**0**	**59**
M6	**0**	**63**
C	**468**	**1416**
D	**39**	**1348**

Once pointing error is determined, individual test points are analyzed for the REF and TEST signals using the captured data. Receiver SNR is plotted and evaluated first as it gives an indication as to how the transmission channel is affecting the signals. This is compared to ground station antenna pointing error to identify any SNR anomalies due to an improperly pointed antenna. Next, estimated input signal E_b/N_0 is compared to the receiver SNR data to verify the results are consistent between the two data sets. Lower SNR values or signal corruption due to multipath should correlate with lower estimated E_b/N_0 and should be consistent between the coded and uncoded links. Any points that are not correlated require further investigation. DQM is assessed next both by itself and compared with receiver SNR and estimated E_b/N_0. (Note: If the transmission channel was only noise limited, a direct comparison could be made between output DQM and input E_b/N_0 illustrating input BEP versus output BEP. Unfortunately, the links are typically multipath limited negating this direct comparison.) What can be compared is the DQM for CH1, CH2 and COMB for the REF and TEST signals both individually and comparatively.

Finally, LA calculations are made using the BERT data. By this time in the analysis process the resulting LA for each link should just confirm what was observed from the data already analyzed for the point.

Test Point H2 Data Analysis

Given the amount of data collected and analyzed for this flight test it is impossible to cover each test point in detail in this paper. Instead, test point H2 is analyzed in depth as it had some unintentional attributes beneficial to this testing. Recall this point is the return path from the point of maximum distance between aircraft and ground station. Receiver SNR should exhibit a gradual increase as the aircraft flies toward the receive antenna increasing link margin. The actual receiver SNR in Figure 4 does not exhibit this gradual increase rather aa abrupt step in signal strength at time ~12:54:00. By plotting receiver SNR and antenna pointing error together it is easy to see that excessive elevation error resulted in this sustained low signal strength condition. For normal flight operation support this would not be ideal, but for this test this pointing error provided an ideal test condition.

Figure 5 shows the estimation of signal quality at the receiver input and output of the REF and TEST links. The estimated E_b/N_0 are similar for both links. This was expected as the transmission channel characteristics should be nearly identical. The most telling plot comparison between REF and TEST links is DQM. A maximum value of DQM equates to essentially an error-free link and as the DQM value decreases BER increases. During this time of low signal strength (12:43:00-12:54:00), the combined (COMB) output of the REF link is operating at a value of DQM around 16000 roughly equating to a BER~$1x10^{-3}$. In comparison, the TEST link DQM is estimated at the maximum value or essentially error-free data with very few drops in data quality. This says the links are operating in a region on the detection curve (see Figure 6) that clearly illustrates the benefit of FEC! When looking at the plot of accumulated bit errors, the slope of the lines tells the story. From the start of the point to the time in which the antenna was back on track, all three REF signals (RHCP, LHCP, COMB) were accumulating errors at a much higher rate (larger slope) than the TEST signal. Once the pointing error was corrected the signal level jumped to the expected level and the links performed equally as well through the end of the point.

To further illustrate the benefit of forward error correction, a detailed look at the point in which the coded link starts providing error-free data is required. FEC is touted as adding link margin, here is a real-world example. Referring back to Figure 4, notice the receiver SNR plot also includes the distance between aircraft and ground station or slant range. If the plot is zoomed to show the point in which the minimum signal strength and maximum slant range is achieved, the plane maneuvered resulting in a slight increase in signal level of ~2.5dB. This is shown in greater detail in Figure 6. In this 2 second period (12:43:17 to 12:43:19) the REF link encountered an increase in SNR of ~2dB. Even with this increase the link was still operating on the SOQPSK detection curve at $E_b/N_0 \approx$ 8dB thus still providing data with bit errors. On the other hand, the TEST link went from an estimated E_b/N_0 of 3.5dB to ~6.5dB. Due to the strength of the FEC coding, this slight increase in SNR resulted in the link error rate going from $1.7x10^{-2}$ to zero. This ~2dB increase in SNR moved the point on the E_b/N_0 vs. BER detection curve to the right (refer to Figure 6) into the error-free region for the coded link. Due to the elevation error of the ground station antenna, the links stayed operating at this level for the next 11 minutes. This scenario could easily be realized in an actual test mission as it can be thought of as the aircraft flying at a constant arc with a radius required to place the links in this noise-dominated operating condition.

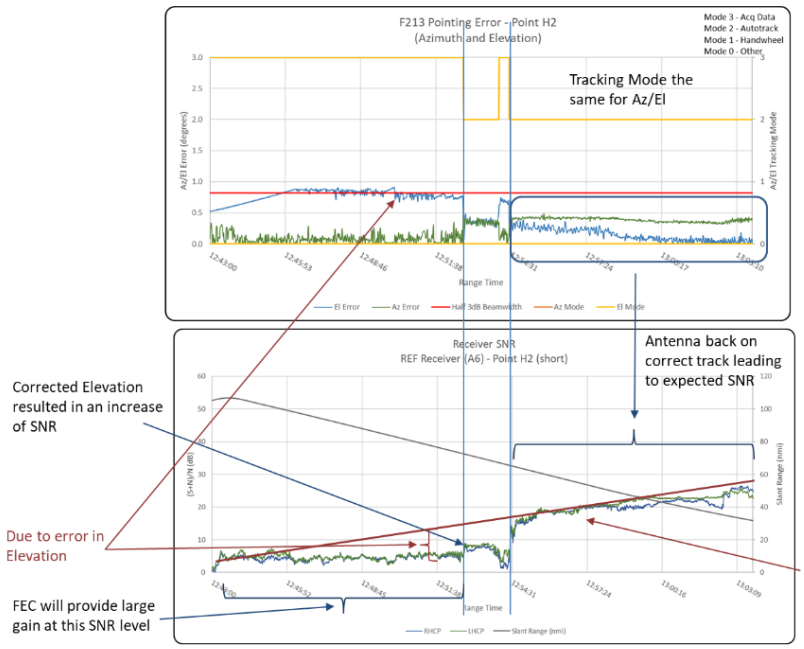

Figure 4 – Test Point H2, Receiver SNR versus Pointing Error

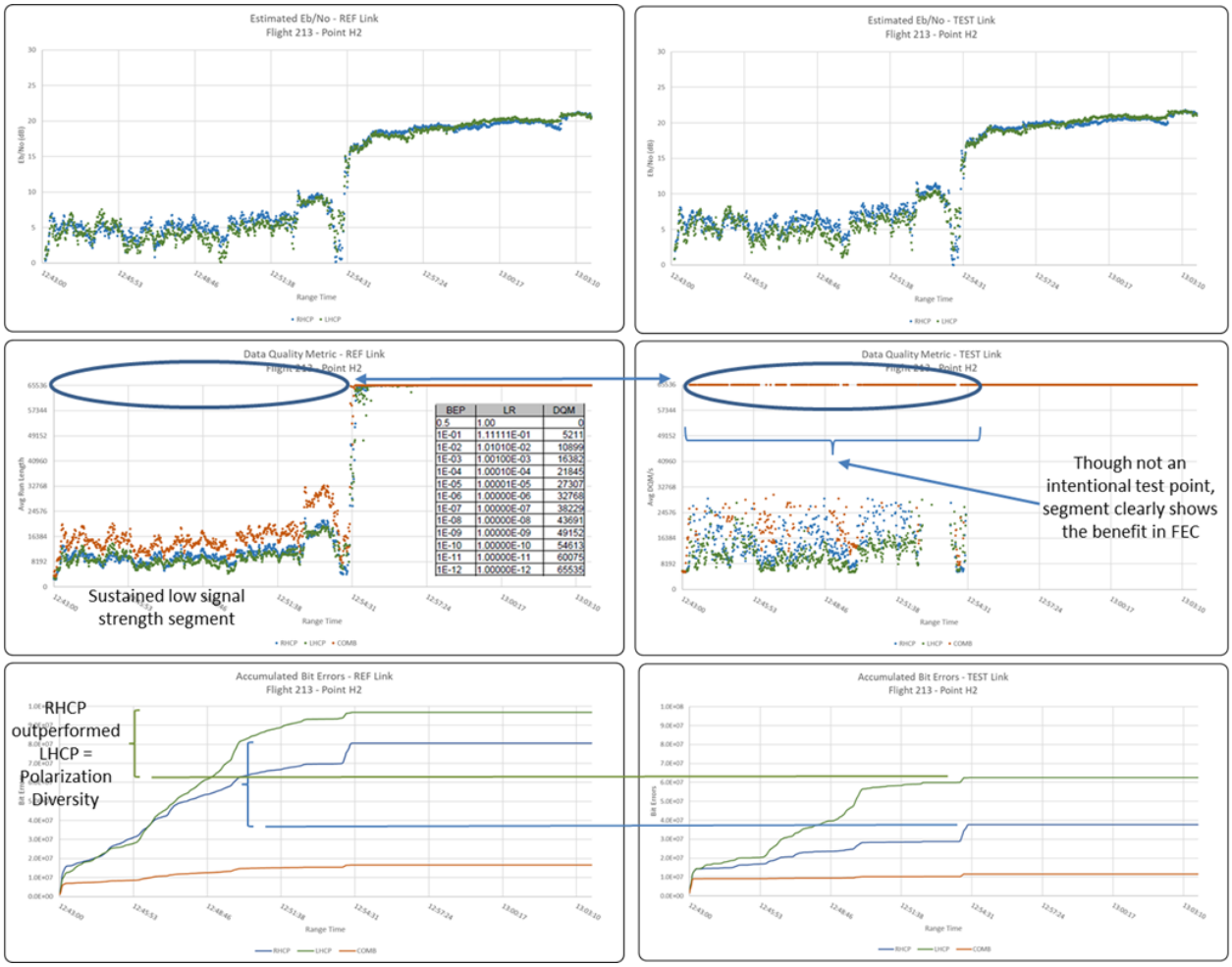

BEP	LR	DQM
0.5	1.00	0
1E-01	1.11111E-01	5211
1E-02	1.01010E-02	10899
1E-03	1.00100E-03	16382
1E-04	1.00010E-04	21845
1E-05	1.00001E-05	27307
1E-06	1.00000E-06	32768
1E-07	1.00000E-07	38229
1E-08	1.00000E-08	43691
1E-09	1.00000E-09	49152
1E-10	1.00000E-10	54613
1E-11	1.00000E-11	60075
1E-12	1.00000E-12	65535

Figure 5 – Test Point Link Analysis (Point H2)

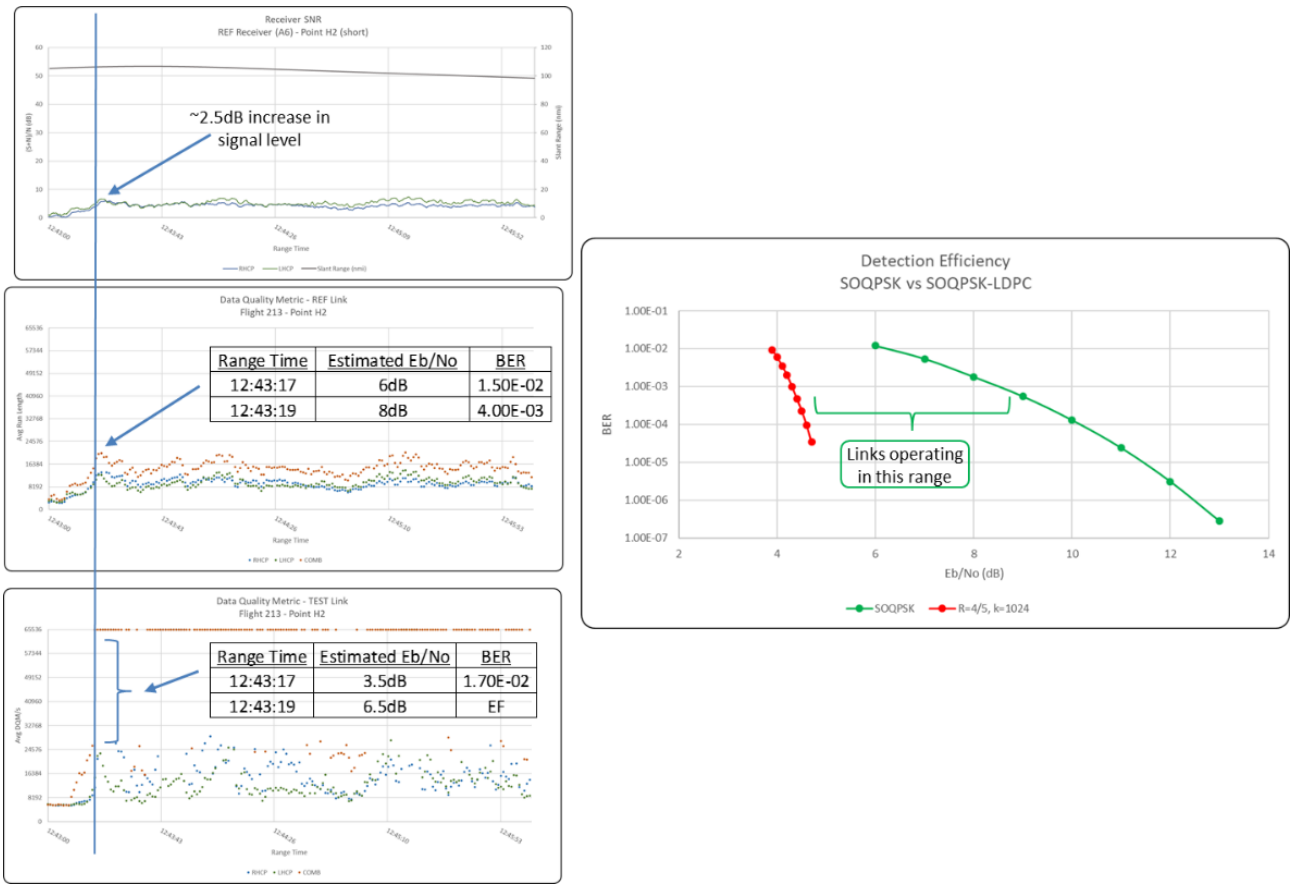

Figure 6 – Detailed Test Point Analysis

All of these detailed metrics available to the telemetry engineer are very informative. They tell a complete story about how the transmission channel affected the transmitted signals, how the telemetry receiver interpreted the signals, and what the output data quality was for the links. But what the end user typically wants to know is: "*How good is my real-time data going to be?*" When that question is asked, Link Availability is presented. LA is an overall assessment of link performance boiled down into one number. Each test point went through the exact same analysis culminating in a LA calculation. Table 3 shows LA results for each test point broken down into each of the three signal paths (RHCP, LHCP, COMB) for the TEST and REF signals. **LA results show the coded link outperformed the uncoded link in all cases.** Recall, these test points were constructed to simulate all of the channel conditions AMT links typically encounter: a channel limited by multipath, one limited by noise, and one limited by the antenna transmission pattern from the aircraft. There was not a single instance where coding had any detrimental effects on the telemetry link. A deeper look at the LA numbers reveal the largest gains were associated with test points H1 and H2, the noise-limited channels. This is expected, FEC increases link margin in noise dominated environments. The other points though could have shown where coding may have had a negative effect on LA. These channels exhibit deep fades due either to antenna pattern nulls or multipath resulting in receiver resynchronization events. These events require the TEST link to resynchronize the SOQPSK demodulator, re-acquire the ASM, and resynchronize the LDPC decoder. Compare this to the REF link where the just the SOQPSK demodulator needs to resynchronize. The additional time required by the TEST link has the potential to affect overall link performance which

would get reflected in the LA numbers. This was not the case as all three TEST signals outperformed the REF signals. One last observation is the large imbalance of LA between RHCP and LHCP signals for some of the test points. This points to a large amount of polarization diversity typically not observed at EAFB over the many years of AMT link testing. It is possible that the higher moisture content in the air coupled with C-Band operation caused some of this polarization diversity. Regardless, the combiner for both links always had a good signal to choose from as indicated by the large amount of combiner gain evident in the LA numbers.

Table 3 – Flight 213 Link Availability

Flight 213 SOQPSK vs SOQPSK-LDPC			
SOQPSK Link Availability			
Test Point	REF LHCP	REF RHCP	REF COMB
Mission	62.5%	59.9%	73.1%
H1	47.8%	18.0%	53.4%
H2 (short)	45.7%	45.6%	49.5%
M1	84.7%	81.9%	96.4%
M2	70.4%	68.5%	82.3%
M5	44.1%	35.6%	67.8%
M6	46.0%	44.4%	58.7%
C	65.7%	75.4%	80.2%
D	75.5%	85.6%	92.1%

Flight 213 SOQPSK vs SOQPSK-LDPC			
SOQPSK-LDPC (4/5, 1024) Link Availability			
Test Point	TEST LHCP	TEST RHCP	TEST COMB
Mission	73.4%	69.9%	85.1%
H1	70.1%	38.0%	77.3%
H2 (short)	52.5%	59.7%	85.8%
M1	93.4%	86.7%	98.0%
M2	81.0%	78.6%	90.2%
M5	45.8%	42.4%	71.2%
M6	52.4%	49.2%	61.9%
C	76.5%	81.6%	86.3%
D	87.6%	92.7%	94.8%

Implementing LDPC FEC in a telemetry link requires an LDPC encoder in the telemetry transmitter and an LDPC decoder in the telemetry receiver. Products are available in the marketplace today for both sides of the link. If transmitters and receivers have been recently upgraded this capability may already be available. If designing a new link from scratch, LDPC FEC should be considered in the link design.

This paper presented analysis and results that make a strong case for considering implementing IRIG 106 LDPC FEC in a telemetry link. System-level Link Availability results comparing SOQSK with SOQPSK-LDPC (**R**=$^4/_5$, ***k***=1024, ***n***=1280) in real-world flight test scenarios were presented. Other performance metrics (receiver SNR, DQM, estimated E_b/N_0, accumulated bit errors) were also presented that further describe and explain the effects channel anomalies have on the telemetry signal and support the calculated gains in Link Availability by the coded link. One cannot argue with the gain in Link Availability of the SOQPSK-LDPC link over the SOQPSK baseline link, a link widely used today on most test Ranges.

WHAT YOU SHOULD GET OUT OF THIS PAPER

- The data presented clearly illustrates the benefit of LDPC forward error correction for an aeronautical mobile telemetry link
  - In every case (per test point, per polarization, per combined output), the coded link outperformed the uncoded link in terms of DQM and Link Availability
  - In not only a noise limited channel (points H1/H2) but also fading-limited channels due to multipath (points C/D) or aircraft antenna pattern (points M1/M2, M5/M6), LDPC FEC provided a more robust telemetry link.

- The trade-off when considering LDPC FEC is over-the-air channel rate vs gain in detection efficiency. For this selection of LDPC (**R**=$^4/_5$, ***k***=1024, ***n***=1280), the OTACR increased over the baseline SOQPSK waveform by 2-1MHz telemetry channels but provided 7dB of link margin gain.
- The analysis of point H2 identified a low signal level condition as being caused by an antenna pointing error. This pointing error was beneficial to the test as it provides an analysis opportunity to showcase the benefit of LDPC FEC in low SNR, noise dominated signal conditions.
- Tracking Error Seconds (*TES*) was presented to characterize the amount of time a pointing error could contribute to an error event. *TES* is included in *LT* when calculating LA.
- Polarization diversity was noted throughout the testing. This could have been the result of the links operating in C-Band during atypical EAFB weather conditions.
- The large amount of polarization diversity meant the receiver combiner typically had a good channel to choose from. This is illustrated in the large amount of combiner gain compared to individual polarizations in the Link Availability results.
- ***The data showed no reason not to implement IRIG 106 LDPC FEC for AMT links***

ACKOWLEDGEMENTS

A special thanks to the EAFB Spectrum Relocation Fund managed by Bobbie Wheaton, without her support this work would not have been accomplished. The author would also like to thank the following for not only their telemetry expertise but their continued technical support for AMT systems:
From Edwards AFB: Bob Selbrede, Glen Wolf
From Quasonix: Terry Hill, Jim Uetrecht, Bob Schumacher, Mark Geoghegan
From Safran Data Systems: Jean-Guy Pierozak, Gregory Blanc
From Brigham Young University: Dr. Michael Rice

REFERENCES

1. Secretariat, Range Commander Council, *"Low-Density Parity-Check codes for Telemetry Systems"*, RCC Document IRIG 106 Chapter 2, Appendix 2-D
2. Gallagher, R.G. *"Low-Density Parity Check Codes"*, Monograph, MIT Press, 1963
3. Consultative Committee for Space Data Systems, *"Low Density Parity Check Codes for use in Near-Earth and Deep Space Applications, Experimental Specification",* CCSDS131.1-0-2, September 2007
4. Hill, Terry. Uetrecht, Jim. *"SOQPSK with LDPC Error Correction: A New Dot in the Bandwidth-Efficiency Plane"*, European Test & Telemetry Conference Proceedings, June 2013
5. Temple, Kip. *"Performance Evaluation of Low-Density Parity Check Forward Error Correction in An Aeronautical Flight Environment"*, International Telemetry Conference Proceedings, October 2014
6. Perrins, Erik. "*FEC Systems for Aeronautical Telemetry*", IEEE Transactions on Aerospace and Electronic Systems Vol.29. No. 4, October 2013
7. Jefferis, Robert. "*Link Availability and Error Clusters in Aeronautical Telemetry"*, Proceedings of the International Telemetry Conference, October 1999
8. Secretariat, Range Commander Council, *"Standards for Data Quality Metrics and Data Quality Encapsulation"*, RCC Document IRIG 106 Chapter 2, Appendix 2-G
9. Rice, Michael. *Digital Communications – A Discrete-Time Approach*. Pearson Prentice Hall 2009
10. Proakis, John G. *Digital Communications.* McGraw Hill 1995