FLIGHT TEST TECHNOLOGY BRANCH

FTC-TIM-71-1003

May 1971

EQUATIONS AND TECHNIQUES FOR COMPUTING BRAKING FRICTION COEFFICIENTS AND BRAKING ENERGIES

By

B. Lyle Schofield

FOREWORD

There has long been a requirement for a set of equations which would allow accurate computation of braking coefficients of friction using hand computation methods. Equally important has been the requirement to compute total brake energy absorbed for planning of high energy braking tests. These combined requirements prompted the development of the equations and techniques presented in this report. It is hoped that they will find useful employment in what the author feels are some of the most dangerous (from the standpoint of aircraft survival) types of tests conducted at the Air Force Flight Test Center.

B. Lyle Schofield
Aerospace Engineer

TABLE OF CONTENTS

	Page
INTRODUCTION	i
LIST OF SYMBOLS	ii
BRAKING EQUATIONS	1
Use of Braking Equations	4
Brake Energy Predictions	9
REFERENCE	13
APPENDIX I - Development of Braking Equations	14
APPENDIX II - Computation of Rolling Friction, and Lift and Drag Coefficients from Coast Down Data	20
APPENDIX III - Friction Coefficient Computer Program	27

INTRODUCTION

Maximum energy braking tests are among the most hazardous tests conducted by the Flight Test Center. The reasons they are so hazardous are many and varied (fire from overheated brakes, broken brakes and wheels with hot shrapnel puncturing fuel tanks, etc.) but many of these hazardous conditions result from poor control over the amount of energy programmed for the test. It is with this in mind that the equations derived here were developed. These equations were successfully used in the prediction and analysis of data obtained in the "Evaluation of a 5-Rotor Brake and Modulated Antiskid System Installed on a KC-135A", FTC-TR-64-43. The results were cross checked with the digital and analog results detailed in TR-64-43, and they generally fell between the analog and digital results, favoring slightly the analog results.

In view of the fact that exact energies absorbed by the brakes are difficult to obtain because of the many factors involved (braking coefficients, lift and drag coefficients, engine thrust, etc.) it is recommended that maximum braking test be carried out to 95+ percent of rated braking energy. This allows a five (5) percent margin for unknown factors. Tests should never be programmed for 100 percent of rated braking energy since some overshoot is easily possible.

LIST OF SYMBOLS

Symbol	Definition	Units
A	$(F_{T_o} - \mu_B W_T)$	lbs
B	$\frac{\sigma S}{841.4}(\mu_B C_L - C_D) + K$	lb sec^2/ft^2
C_D	Drag Coefficient	---
C_L	Lift Coefficient	---
D	Drag	lbs
E	Brake Energy Absorbed	ft lb
F	Force	lbs
G	Abbreviation for $(\frac{\sigma S}{841.4} C_L)$	lb sec^2/ft^2
g	Gravitational Constant	ft/sec^2
K	Slope of Thrust vs V_T^2 Curve	lb sec^2/ft^2
L	Lift	lbs
P_a	Ambient Pressure	in hg
S	Wing Area	ft^2
s	Distance	ft
$\ddot{s}$	Second Derivative of Distance with Time	ft/sec^2
T_a	Ambient Temperature	deg k
t_a	Ambient Temperature	deg C
V	Velocity	ft/sec or knots
V_c	Calibrated Airspeed	knots

Symbol	Definition	Units
V_e	Equivalent Airspeed ($\sqrt{\sigma}\ V_T$)	knots
V_T	True Airspeed	ft/sec or knots
W_T	Weight	lbs
δ_a	Ambient Pressure Ratio	---
μ	Average Friction Coefficient	---
ρ	Air Density	lb sec^2/ft^4
σ	Air Density Ratio	---
Subscripts		
a	Ambient	---
B	Braking	---
C_{ge}	Calibrated In Ground Effect	---
g	Ground	---
gr	Gear Reaction	---
H	Head Wind Component	---
i	Indicated	---
ic	Corrected for Instrument Error	---
SL	Sea Level	---
T	Thrust	---
T_o	Thrust at Zero Velocity	---

BRAKING EQUATIONS

The braking equations reduce to two primary equations; one for stopping distance and the other for brake energy absorbed. These equations are valid between any two braking velocities where the aircraft configuration and ground attitude are constant. For example, suppose you were testing an airplane which required drag chute deployment below a given airspeed. The braking equations could then be broken down into two segments, one for conditions prior to chute deployment and the other for conditions after chute deployment. The information derived from analysis of these two segments would be added together to obtain the total effect.

A number of assumptions were made in order to derive the braking equations. None of the assumptions should result in any significant effect on the final accuracy of the data thus obtained. Confirmation of the validity of these assumptions has been made through comparison of data obtained by two other techniques previously mentioned. The assumptions are as follows:

1. An average coefficient of friction can be used together with the vertical forces of the aircraft exerted on the runway to describe braking force.

2. The aircraft - runway reaction loads are concentrated on the main landing gear. This, of course, is not exactly true but the computed stopping distances and brake energies will not be affected since the braking coefficients used to compute stopping distance and brake energy are derived using this same assumption.

3. Aerodynamic forces are assumed to be a function of ground speed and ambient density rather than airspeed. This assumption is valid in view of the fact that this type of testing should be done under low wind conditions.

4. The idle thrust can be reasonably well defined as a function of velocity squared. Most engine characteristics do show a

trend for nonlinearity with speed and can be reasonably well defined as a function of the square of the velocity. This is also true of reverse thrust characteristics.

5. Rolling friction is included with the braking coefficient of friction for braked decelerations.

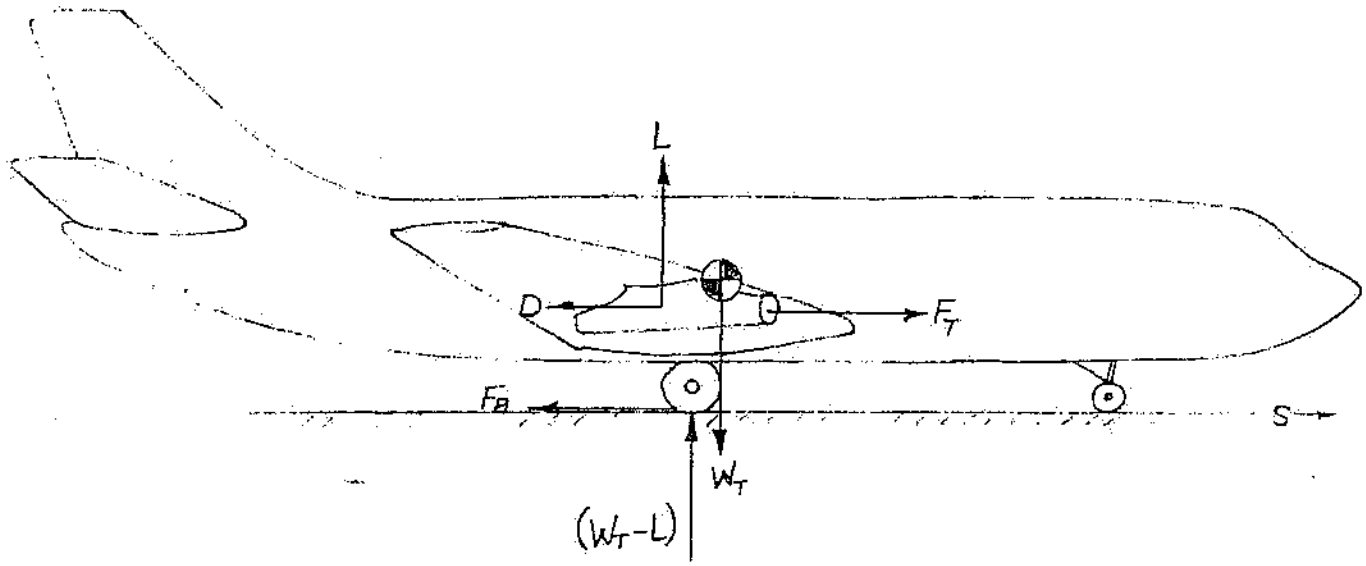

FIGURE 1

<u>Summation of Horizontal Forces:</u>

$$F_T - F_B - D = \frac{W_T}{g}\ddot{s}$$

where: $F_B = \mu_B(W_T - L)$

$$D = f(\rho, V_T^2, C_D, S)$$

$$L = f(\rho, V_T^2, C_D, S)$$

$$F_T = f(V_T^2, F_{T_o}, K) \qquad F_{T_o} \;\&\; K = f(T_a, p_a)$$

From these equations the following relationships were derived: (derivation contained in Appendix I)

$$\boxed{\Delta s = -\frac{W_T}{2gB} \ln \left[\frac{1 + (B/A)V_{g_1}^2}{1 + (B/A)V_{g_2}^2}\right] \quad \text{(ft)}} \qquad 1\text{-}1$$

where:

V_g	≡ Ground Speed	ft/sec
$A = F_{T_o} - \mu_B W_T$		lbs
$B = \frac{\sigma S}{841.4}(\mu_B C_L - C_D) + K$		lb sec²/ft²
μ_B	≡ Braking Coefficient	---
$\sigma = \frac{\rho_a}{\rho_{SL}} = \frac{p_a \text{ (in hg)}}{(t_a\,°F + 459.7)} \times 17.335\left(\frac{°R}{\text{in hg}}\right)$		---
W_t	≡ Gross Weight	lbs
S	≡ Wing Area	ft²
F_{T_o}	≡ Thrust at Zero Speed (refer to figure AI-2)	lbs
K	≡ Slope of Thrust Versus V^2 Function (refer to figure AI-2)	lb sec²/ft²
C_L	≡ Lift Coefficient (refer to Appendix II)	---
C_D	≡ Drag Coefficient (refer to Appendix II)	---
$g = 32.174$		ft/sec²

$$\Delta E = \frac{\mu_B K_T}{2Bg} \left\{ G(V_{g_1}^2 - V_{g_2}^2) - (K_T + \frac{G}{B/A})x \ln \left[\frac{1 + (B/A)V_{g_1}^2}{1 + (B/A)V_{g_2}^2} \right] \right\} \quad \text{(ft lb)} \qquad 1\text{-}2$$

where: $G = \frac{\sigma S}{841.4} C_L$ $\quad$ $lb/sec^2/ft^2$

Use of Braking Equations

These braking equations are useful for both data analysis and prediction. They appear to be rather complicated and not too useful for hand calculation. Such is not the case, however, because there is considerable duplication of terms both in the distance and in the energy equations. Once these terms are calculated for a given set of conditions they will apply for the three or four computations you will be required to make at those particular conditions.

Data Reduction: In all programs where the maximum braking energy will be approached, a buildup program is required which supplies the data needed to extrapolate to successively higher brake energies. Analyses of these lower energy data is important. One must obtain reasonably accurate braking coefficients and relate them to some parameter which will allow extrapolation to the next proposed test conditions. Some have found that braking coefficients correlate well with brake energy. Certainly, as the brake energies get higher, there will be brake fade which will show up as a reduction in the average braking coefficients.

The braking equations do not extract braking coefficients directly but rather they are implicit in the braking distance equation. The technique, then, is to compute test day braking distances for three or four coefficients and then plot them one versus the other. The test braking coefficient is then obtained from the test stopping distance. It is very important that test deceleration conditions (velocities and distances) include only that data obtained during acutal braking and not the deceleration which may occur prior to brake application.

An advantage of this computational procedure is that a complete velocity/distance history is not required. Only the braking distance and associated start and end ground speeds are required.

Once the braking coefficient has been obtained, the associated brake energy can be calculated directly.

EXAMPLE:

Aircraft Characteristics: (4 engines)

$W_t = 274{,}768$ lbs

$C_{L_g} = .21$

$C_{D_g} = .095$

$S = 2433\ ft^2$

F_{T_o}/δ_a per eng $= 572$ lbs

$K/\delta_a = -.0117\ lb\ sec^2/ft^2$

Test Conditions:
Pressure Alt = 2300 ft
Ambient Temp = 55°F
V_g Brake Application = 263 ft/sec
Stopping Dist = 4558 ft

$V_{g_1} = 263$ (ft/sec) $\quad V_{g_2} = 0$

$$F_{T_o} = 4 \times 572 \times \delta_a = 2282 \times .9196 \text{ lbs} = 2104 \text{ lbs}$$

$$A = (2104 - 274{,}768\ \mu_B)(lb)$$

$$\sigma = \frac{27.517\ (in\ hg)}{(55 + 459.6)(°R)} \times 17.34\ \left(\frac{°R}{in\ hg}\right) = .928$$

$$B = \frac{.928 \times 2433\ (ft^2)}{841.4\ (ft^4/lb\ sec^2)}\ (.21\ \mu_B - .095) + (.0117 \times .9196)$$

$$(lb\ sec^2/ft^2)$$

$$B = .564\ \mu_B - .26568\ (lb\ sec^2/ft^2)$$

Where differences are calculated, as in the case of constants A and B, the values should be computed on a calculator to assure good accuracy.

$$\Delta s = -\frac{274{,}768(\text{lb})}{2 \times B \times 32.174(\text{ft/sec}^2)} \ln\left[\frac{1 + (B/A)(263)^2}{1}\right]$$

$$= -\frac{4270}{B}(\text{lb sec}^2/\text{ft}) \ln\left[\frac{1 + 69{,}169(B/A)}{1}\right]$$

We now select some probable braking coefficients on the basis of past testing. In this case, it is known that the braking coefficient should be between 0.2 and 0.3. The braking coefficients which will be selected are; 0.2, 0.25 and 0.3.

$$\text{for } \mu_B = .2,\ \Delta s = \frac{4270(\text{lb sec}^2/\text{ft})}{.1529(\text{lb sec}^2/\text{ft}^2)} \times$$

$$\ln\left[\frac{1 + 69169(\text{ft}^2/\text{sec}^2)\dfrac{.1529(\text{lb sec}^2/\text{ft}^2)}{52{,}850(\text{lb})}}{1}\right]$$

$$= (27{,}920 \text{ ft})(\ln 1.197) = (27{,}920 \text{ ft})(.1823)$$

$$= 5090 \text{ ft}$$

for $\mu_B = .25$, $\Delta s = 4170$ ft

for $\mu_B = .3$, $\Delta s = 3442$ ft

In plotting this data (figure no 2) it is apparent that the braking coefficient will be around 0.2, therefore it is advisable to compute another point in that area. In this case, a μ_B of 0.22 was chosen. This fourth point has another very important benefit. It will

confirm the validity of the other points since μ_B versus stopping distance is a smooth function.

for μ_B = .22, ΔS = 4680 ft

One word of caution. The natural log (ln) of a function close to unity is sensitive so care must be exercised in the computation of the natural log term.

Figure number 2 shows a plot of the computed data and when related to the test stopping distance shows the braking coefficient to be 0.227.[1]

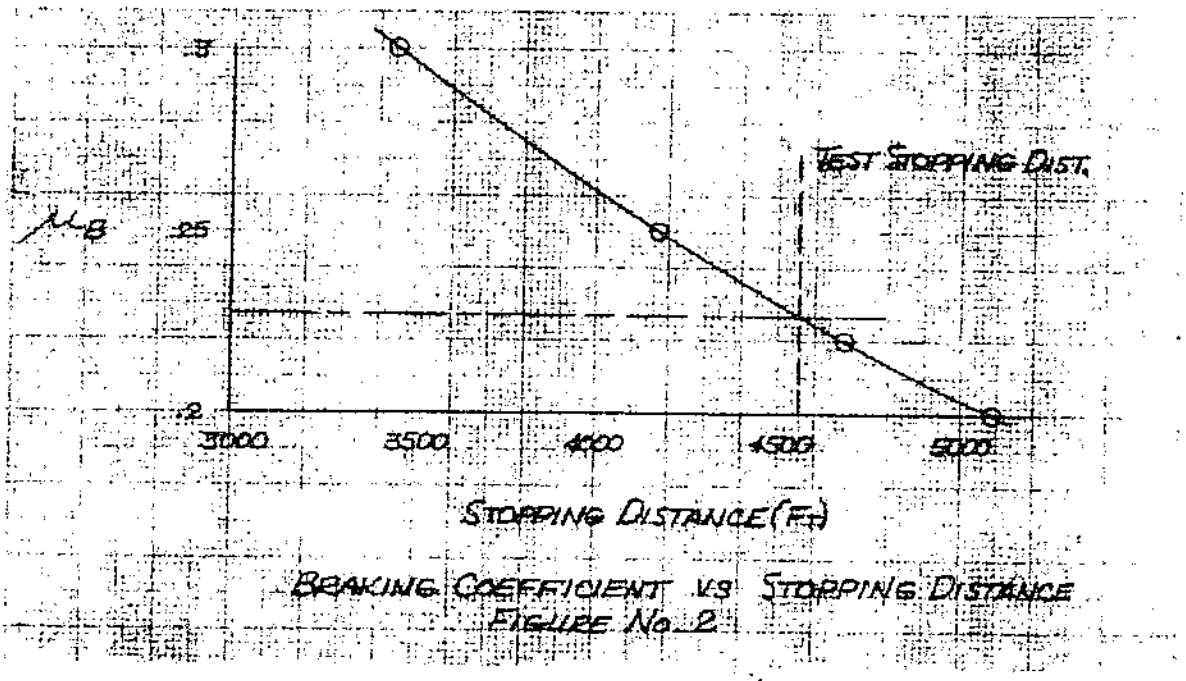

BRAKING COEFFICIENT VS STOPPING DISTANCE
FIGURE No. 2

This value can now be plugged into the energy equation to determine the total braking energy.

$$A_{final} = 2104 - 274{,}768(.227)(lb) = -60{,}300(lb)$$

$$B_{final} = .564(.227) - .26568(lb\ sec^2/ft^2)$$

$$= -.1377(lb\ sec^2/ft^2)$$

[1]Appendix III presents a computer program which will compute μ through an iterative process.

$$G = \frac{.928 \times 2433}{841.4} \times .21(\text{lb sec}^2/\text{ft}^2) = .5635(\text{lb sec}^2/\text{ft}^2)$$

$$\Delta E_B = \frac{4270 \times .227}{-.1377} (\text{ft}) \left[.5635(69{,}169 - 0)(\text{lb}) - (274{,}800 + \frac{.5635}{.1377} 60{,}300)(\text{lb}) \ln \left(\frac{1 + \frac{.1377}{60{,}300} 69{,}169}{1} \right) \right]$$

$$= 263.8 \times 10^6 \text{ ft lb}$$

This is the total energy absorbed by the brake system. Generally, data is presented in terms of energy per brake so the total energy would be divided by the number of brakes involved. In this case there were eight brakes involved so the energy per brake was:

$$\Delta E_B/\text{brake} = 33.0 \times 10^6 \text{ ft lb}$$

With the test coefficient and the associated brake energy, this point is plotted together with data previously obtained (refer to figure no 3).

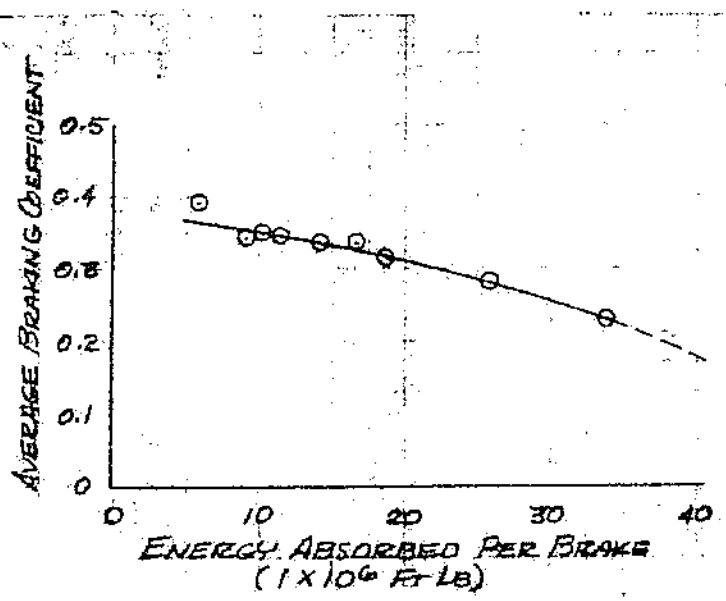

BRAKE ENERGY VERSUS BRAKING COEFFICIENT
FIGURE 3

Brake Energy Prediction

The next problem is to be able to predict the next higher brake energy at the anticipated test day conditions. These calculations will only be required on a few of the highest energy runs but one should not wait until the maximum brake energy test to perform these calculations. Confidence should be gained in your procedures prior to the moment of truth.

The primary parameter of interest is the true ground speed required to obtain the desired energy. Again, this cannot be solved explicitly but three or four guesses must be made to bracket the desired value.

In addition to the extrapolated braking coefficient (μ_B), an estimate must be made of the test day temperature and pressure. Since these are usually second order terms, it isn't mandatory that they be exact, so the calculations can be made the day prior to the test. The only exception to this would be where a large portion of the total energy is absorbed by other than the brakes; i.e., by high aerodynamic drag devices or by reverse thrust which are highly dependent on ambient conditions.

Example:

Desired test energy: 38.5×10^6 (ft lb/brake)

Aircraft characteristics: (4 engines)

$W_t = 274{,}768$ (lbs)

$C_{L_g} = .21$

$C_{D_g} = .095$

$S = 2433$ (ft^2)

F_{T_o}/δ_a per eng $= 572$ (lb)

$K/\delta_a = -.0117$ (lb sec^2/ft^2)

Extrapolated braking coefficient: .19

Estimated Test Day Conditions:
Pressure Alt: 2230(ft)
Ambient Temp: 78(°F)

$$F_{T_o} = 4 \times 572 \times \delta_a = 2288 \times .922 = 2110 \text{ (lbs)}$$

$$K = -.0117(\text{lb sec}^2/\text{ft}^2) \times \delta_a = -.0108(\text{lb sec}^2/\text{ft}^2)$$

$$A = 2110 - .19 \times 274{,}768(\text{lb}) = -50{,}090(\text{lb})$$

$$\sigma = \frac{27.587 \text{ (in hg)}}{(78 + 459.6)(°\text{R})} \times 17.34(°\text{R/in hg}) = .89$$

$$B = \frac{.89 \times 2433}{841.4}(.19 \times .21 - .095) - .0108(\text{lb sec}^2/\text{ft}^2)$$

$$= -.1527(\text{lb sec}^2/\text{ft}^2)$$

$$G = \frac{.89 \times 2433}{841.4} \times .21(\text{lb sec}^2/\text{ft}^2) = .541(\text{lb sec}^2/\text{ft}^2)$$

$$\Delta E = \frac{.19 \times 274{,}768}{2(-.1527) \times 32.174}(\text{ft}) \left[.541(V_{g_1}^2) - (274{,}768 + \frac{.541 \times 50{,}090}{.1527})\ln(1 + \frac{.1527}{50{,}090} V_{g_1}^2)\right](\text{lb})$$

$$= -5310(\text{ft}) \left[.541\, V_{g_1}^2 - (452{,}168)\ln(1 + \frac{.1527}{50{,}090} V_{g_1}^2)\right] \quad (\text{lb})$$

We will first assume four velocities; 275, 285, 295 and 305 feet per second.

$$\Delta E_{V_g = 275} = 281 \times 10^6 \text{ ft lb} = 35.1 \times 10^6 \text{ (ft lb/brake*)}$$

$$\Delta E_{V_g = 285} = 37.2 \times 10^6 \text{ (ft lb/brake)}$$

*This airplane has eight brakes

$$\Delta E_{V_g = 295} = 39.4 \times 10^6 \text{ (ft lb/brake)}$$

$$\Delta E_{V_g = 305} = 41.6 \times 10^6 \text{ (ft lb/brake)}$$

These brake energies are plotted versus the ground speed at brake application (figure 4) and the ground speed for the desired brake energy (38.5×10^6 ft lb) is obtained. The stopping distance is now readily obtainable.

$$\Delta S = -\frac{274,768}{2 \times -.1572 \times 32.174} \ln \left[1 + \frac{.1527}{50,090} (291)^2\right]$$

$$= 6420 \text{ (ft)}$$

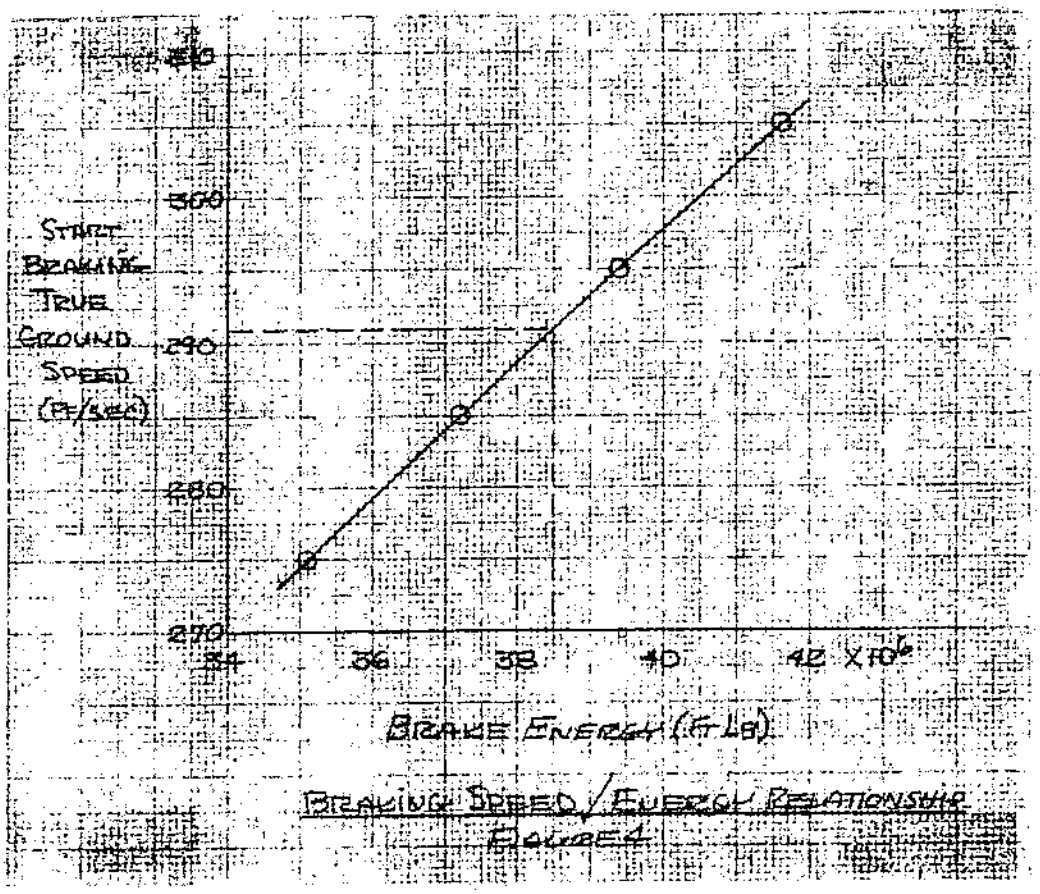

BRAKING SPEED / ENERGY RELATIONSHIP
FIGURE 4

The braking distance and start braking ground speed are now determined but in most cases the pilot does not have ground speed available for test control. The indicated airspeed must then be determined from ground speed, ambient conditions and airspeed characteristics from the following relationship:

$$V_i = (.592V_g + V_H)\sqrt{\sigma} - \Delta V_{ic} - \Delta V_{c_{ge}}$$

where:

V_i	=	indicated airspeed	kts
V_g	=	ground speed	ft/sec
V_H	=	head (+) or tail (-) wind	kts
σ	=	$\frac{p_a \text{ (in hg)}}{(t_a{}^\circ F + 459.6)} \times 17.34(^\circ R/\text{in hg})$	---
ΔV_{ic}	=	instrument error to be added	kts
$\Delta V_{C_{ge}}$	=	ground effects position error to be added	kts

The computation of indicated airspeed (V_i) should be deferred until just before test time. <u>Extreme care should be taken in the calculation of this parameter since it is the primary test control parameter.</u>

REFERENCE

Peterson, Donald C. and Cross, Carl S., Evaluation of a 5-Rotor Brake and Modulated Antiskid System Installed on a KC-135A, Air Force Flight Test Center Technical Report 64-43.

APPENDIX I

DEVELOPMENT OF BRAKING EQUATIONS

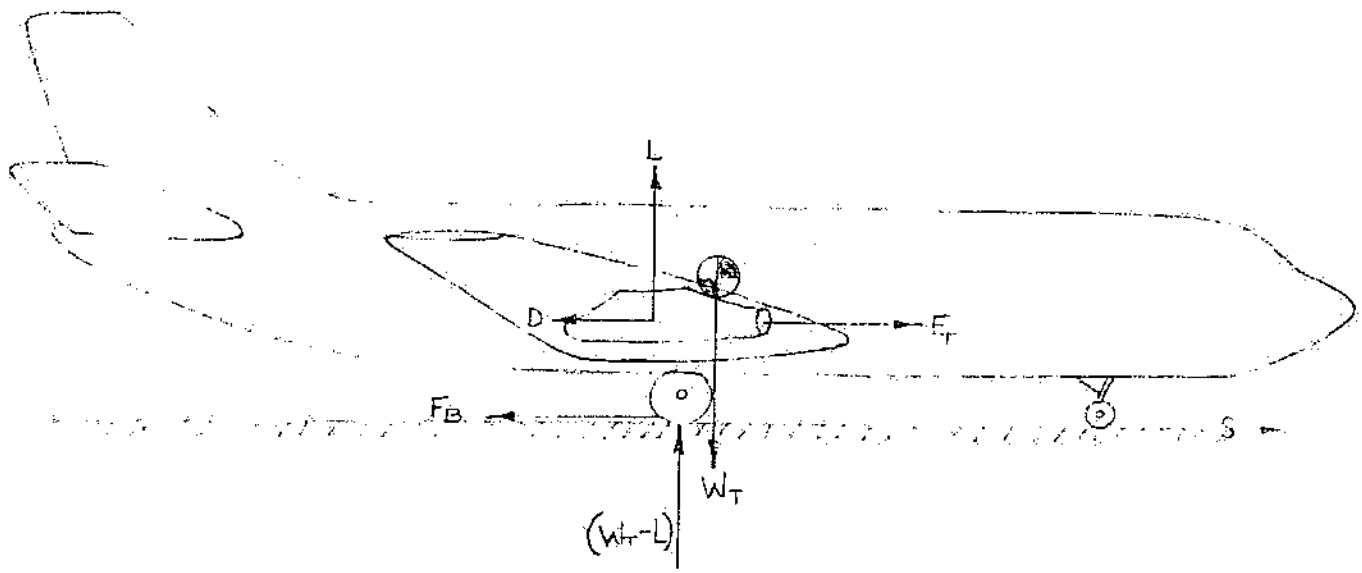

FIGURE AI-1

$$\Sigma F_x = 0$$

$$- F_B - D + F_T - \frac{W_T}{g} \frac{dV_g}{dt} = 0$$

where: $F_B = \mu_B (W_T - L)$

$$D \equiv \tfrac{1}{2}\rho V_g^2 S C_D \ \& \ L \equiv \tfrac{1}{2}\rho V_g^2 S C_L$$

$$F_T = F_{T_o} + K V_g^2$$

The F_{T_o} and K are obtained from a plot of F_T vs V_g^2 from one or more runs. Refer to figure AI-2.

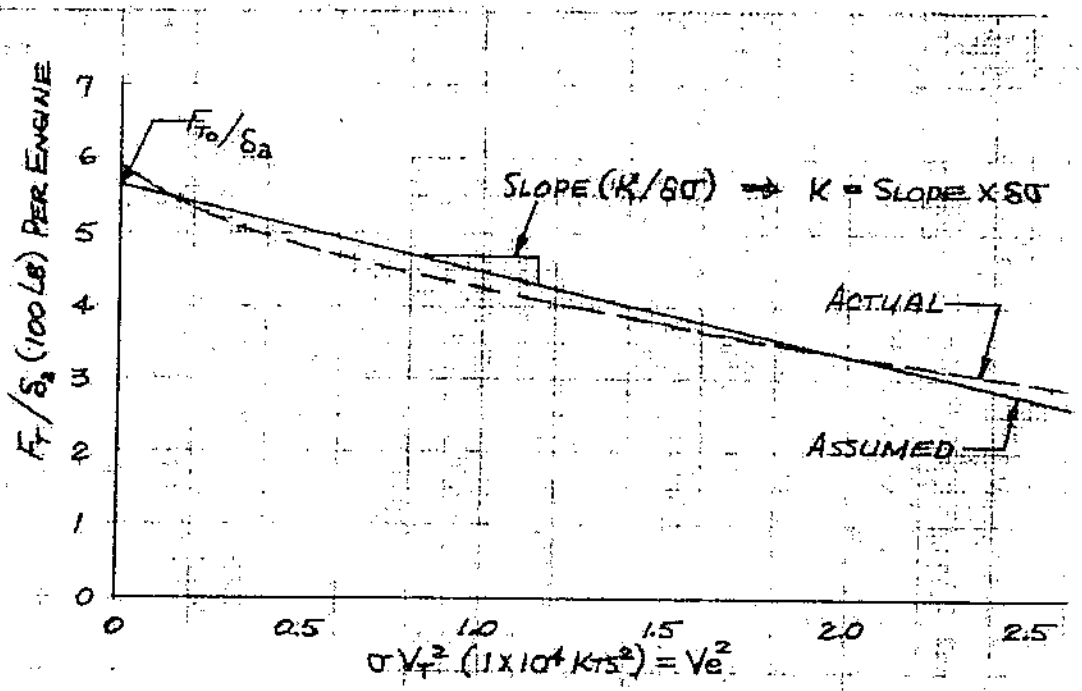

THRUST - SPEED RELATIONSHIP
FIGURE AI-2

Substituting back into the equation for summation of horizontal forces we have:

$$- \mu_B (W_T - \tfrac{1}{2}\rho V_g^{\,2} S C_L) - \tfrac{1}{2}\rho V_g^{\,2} S C_D + F_{T_o} + K V_g^{\,2} = \frac{W_T}{g}\frac{dV_g}{dt}$$

$$\text{but:} \quad V_g = \frac{ds}{dt} \text{ and } dt = \frac{ds}{V_g}$$

Substituting we have:

$$- \mu_B W_T + V_g^{\,2}\left[\frac{\rho S}{2}(\mu_B C_L - C_D) + K\right] + F_{T_o} = \frac{W_T}{g} V_g \frac{dV_g}{ds}$$

$$ds = \frac{W_T}{g}\left\{\frac{V_g\, dV_g}{(F_{T_o} - \mu_B W_T) + V_g^{\,2}\left[\frac{\rho S}{2}(\mu_B C_L - C_D) + K\right]}\right\}$$

Let $A = F_{T_o} - \mu_B W_T$ (lb)

$$B = \frac{\rho S}{2} (\mu_B C_L - C_D) + K \text{ (lb sec}^2/\text{ft}^2)$$

but $\rho = \rho_{SL} \times \sigma$

$$\therefore B = \frac{\sigma S}{841.4} (\mu_B C_L - C_D) + K \text{ (lb sec}^2/\text{ft}^2)$$

$$ds = \frac{W_T}{g} \int_{V_{g_1}}^{V_{g_2}} \frac{V_g dV_g}{A + BV_g^2}$$

let $\zeta = A + BV_g^2$

$$d\zeta = 2BV_g dV_g$$

or $V_g dV_g = \frac{d\zeta}{2B}$

then

$$ds = \frac{W_T}{2gB} \int \frac{d\zeta}{\zeta}$$

$$\Delta s = \frac{W_T}{2gB} \left[\ln \zeta \right]_{\zeta_1}^{\zeta_2} = \frac{W_T}{2gB} \left[\ln(A + BV_g^2) \right]_{V_{g_1}}^{V_{g_2}}$$

$$\Delta s = \frac{W_T}{2gB} \ln(A + BV_{g_2}) - \ln(A + BV_{g_1})$$

For deceleration, V_{g_1} will always be larger than V_{g_2}. Therefore the equation can be written as follows:

Stopping Distance Equation:

$$\Delta s = -\frac{W_T}{2gB} \ln\left[\frac{1 + (B/A)V_{g_1}^2}{1 + (B/A)V_{g_2}^2}\right] \qquad 1\text{-}1$$

Brake Energy (E_B)

$$\Delta E_B = \int_{t_1}^{t_2} F_B V_g dt$$

From the ΣF_x equation we have:

$$dt = \frac{W_T dV_g}{g(-F_B - D + F_T)}$$

Substituting dt into the energy equation yields:

$$\Delta E_B = \frac{W_T}{g} \int_{V_{g_1}}^{V_{g_2}} \frac{F_B V_g dV_g}{(F_T - F_B - D)}$$

Substituting in for F_B, D and F_T yields:

$$\Delta E_B = \frac{W_T}{g} \int_{V_{g_1}}^{V_{g_2}} \frac{\mu_B(W_T - \frac{1}{2}\rho V_g^2 SC_L)V_g dV_g}{F_{T_o} + KV_g^2 - \mu_B(W_T - \frac{1}{2}\rho V_g^2 SC_L) - \frac{1}{2}\rho V_g^2 SC_D}$$

Rearranging:

$$\Delta E_B = \frac{\mu_B W_T}{g} \int_{V_{g_1}}^{V_{g_2}} \frac{(W_T V_g - \frac{1}{2}\rho S C_L V_g^3)\, dV_g}{(F_{T_o} - \mu_B W_T) + V_g^2 \left[\frac{\rho S}{2}(\mu_B C_L - C_D) + K\right]}$$

For simplification we will define another new term.

$$G \equiv \frac{\rho S}{2} C_L = \frac{\rho S}{841.4} C_L$$

Now,

$$\Delta E_B = \frac{\mu_B W_T}{g} \int_{V_{g_1}}^{V_{g_2}} \left(\frac{W_T V_g - G V_g^3}{A + B V_g^2}\right) dV_g$$

$$= \frac{\mu_B W_T}{g} \int_{V_{g_1}}^{V_{g_2}} \left(\frac{W_T V_g}{A + B V_g^2} - \frac{G V_g^3}{A + B V_g^2}\right) dV_g$$

Dividing through the second term we have:

$$\Delta E_B = \frac{\mu_B W_T}{g} \int_{V_{g_1}}^{V_{g_2}} \left(\frac{W_T V_g}{A + B V_g^2}\right) dV_g - G \int_{V_{g_1}}^{V_{g_2}} \left[\frac{V_g}{B} - \frac{(A/B) V_g}{A + B V_g^2}\right] dV_g$$

$$\Delta E_B = \frac{\mu_B W_T}{g} \left(W_T + \frac{GA}{B}\right) \int_{V_{g_1}}^{V_{g_2}} \frac{V_g\, dV_g}{A + B V_g^2} - \frac{G}{B} \int_{V_{g_1}}^{V_{g_2}} V_g\, dV_g$$

Brake Energy Equation

$$\Delta E_B = \frac{\mu_B W_T}{2Bg} \left\{ G(V_{g_1}^2 - V_{g_2}^2) - (W_T + \frac{GA}{B}) \ln \left[\frac{1 + (B/A)V_{g_1}^2}{1 + (B/A)V_{g_2}^2} \right] \right\}$$

1-2

APPENDIX II

Computation of Rolling Friction, and Lift and Drag Coefficients from Coast Down Data

Non-braked, runway deceleration (coast down) data can yield rolling friction, lift and drag. This appendix will discuss techniques for extraction of such information.

The data required to make these analyses should be obtained at light gross weights and an initial speed that is relatively high. The high initial speeds are obtained from landings. As soon as the aircraft touches down it should be configured to the desired configuration and then be allowed to decelerate to as low a speed as practicable prior to braking or adding power for a go-around.

Lift Coefficient:

Lift coefficient is the most costly information to obtain because special instrumentation is required. It is necessary to instrument the airplane for landing gear reaction forces. For most aircraft, this means instrumenting the pneumatic pressures in the oleo strut. This is relatively simple because the air servicing port provides easy access for installing a pressure transducer. The reaction force is computed from the pneumatic pressures times the piston area. Piston areas should be readily available from the landing gear manufacturer, but a check of the piston area information can be made from pneumatic pressures measured during a weight and balance.

Computation of lift coefficient is as follows:

$$L = W_T - F_{gr} \text{ (lbs)}$$

where: F_{gr} = Summation of gear reaction forces (lbs)

W_T = Aircraft weight (lbs)

Lift (L) is plotted versus V_c^2. Actually V_c can be substituted for V_e since speeds for ground operation are so low that compressibility effects can be ignored.

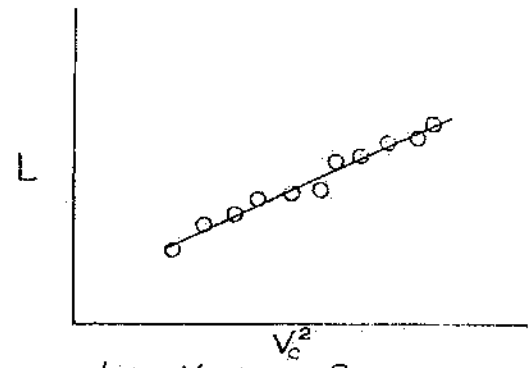

LIFT-VELOCITY RELATIONSHIP
FIGURE AII-1

The lift coefficient is now computed from the slope of the L versus V_c^2 curve (Figure AII-1) and wing area as follows:

$$C_L = \frac{295}{S} \left(\frac{dL}{dV_c^2}\right)$$

where: S = wing area (ft^2)

$$\left(\frac{dL}{dV_c^2}\right) = \text{Slope } (lb/kts^2)$$

It will be noted that the absolute value of lift is not required in this formulation but only lift variation with V_c^2. This will be of some assistance in analysis of the pressure data because zero shifts of the pressure transducer output will be of no concern.

Rolling Friction and Drag Coefficients:

In addition to lift, three other parameters affect coast down distances. These are rolling friction, drag and thrust. With an airplane instrumented for performance, thrust is readily determinable. This leaves rolling

friction and drag as the only unknowns. These can be determined from the technique described below.

The technique is to determine a relationship between rolling friction and drag for two different speed changes on the same coast down. The resulting two curves are plotted against each other and the point of intersection yields the sought after rolling friction and drag coefficient.

Equation 1-1 is used to compute Δs over a range of rolling friction and drag coefficients for a particular speed change. Basic data and an example of the analysis procedure are shown in figure AII-2.

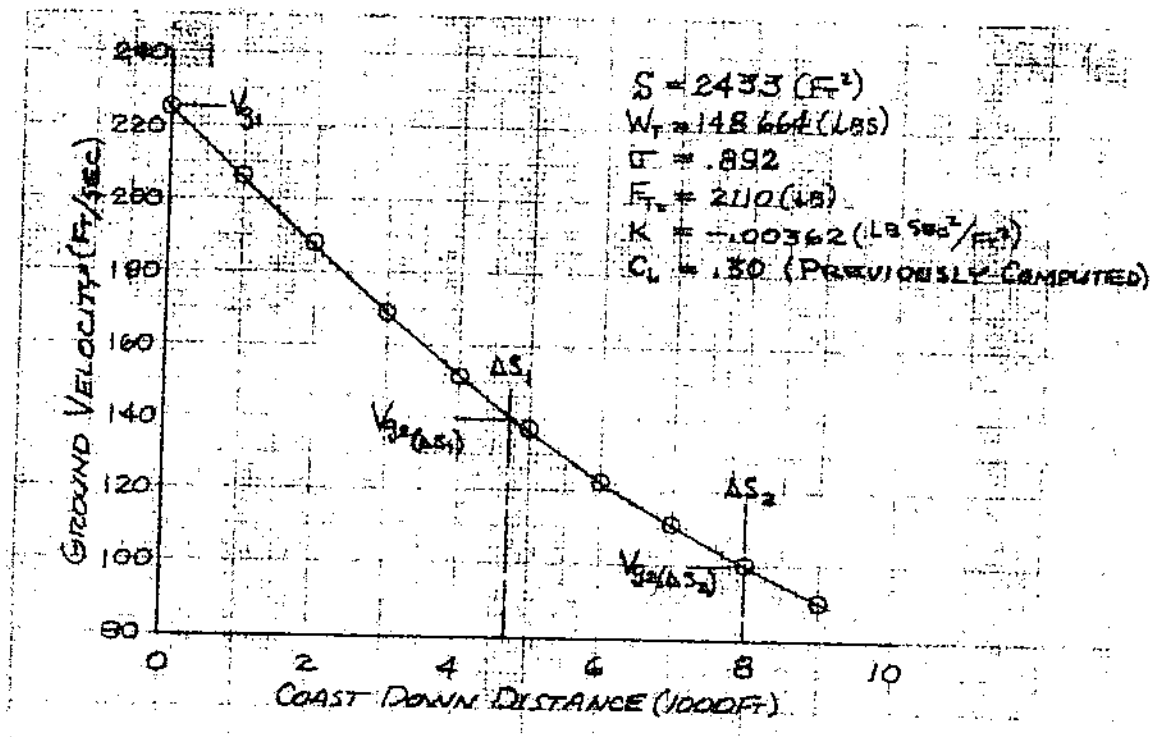

COAST DOWN DATA
FIGURE AII-2

Equation 1-1 was used to compute the information shown in figures AII-3A and AII-3B.

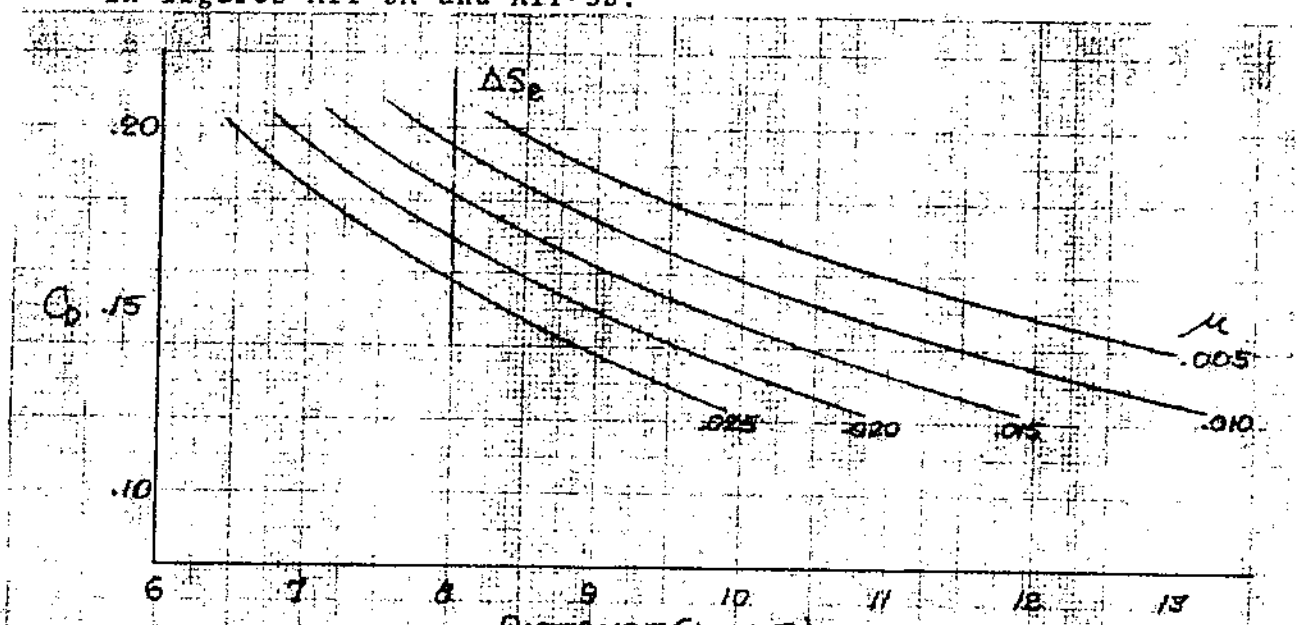

FIGURE AII-3B

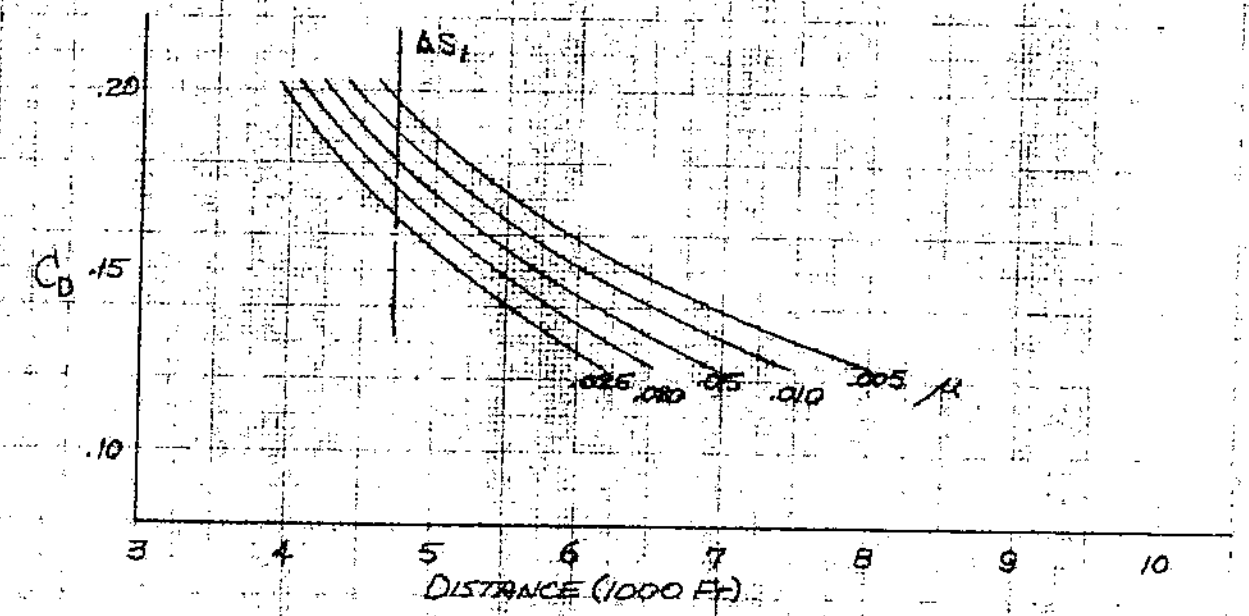

FIGURE AII-3A

Four points per curve were used to provide good definition. An example of the Δs_1, matrix is shown in the table below. V_{g_1} and V_{g_2} were 225 (ft/sec) and 140 (ft/sec) respectively. These computations were made on a desk calculator in order to obtain the required accuracy.

COAST DOWN DISTANCES (FEET)

FOR MATRIX OF ROLLING FRICTION AND DRAG COEFFICIENTS

C_D \ μ	.005	.010	.015	.020	.025
.125	7912	7352	6873	6458	6094
.150	6414	6042	5715	5425	5165
.175	5393	5129	4891	4677	4482
.200	4653	4455	4275	4110	3959

The test coast down distance between 225 (ft/sec) and 140 (ft/sec) was 4730 feet (refer to figure AII-2). The intersection of this distance (Δs_1) with the curves in figure AII-3A yields values of rolling friction and drag coefficients which satisfy the Δs_1 coast down distance. Likewise, the intersection of the Δs_2 coast down distance (8000 feet) with the curves of figure AII-3B yields rolling frictions and drag coefficients for Δs_2. These are now plotted against each other to obtain the rolling friction and drag coefficients which satisfy both Δs_1 and Δs_2 coast down distances (refer to figure AII-4)

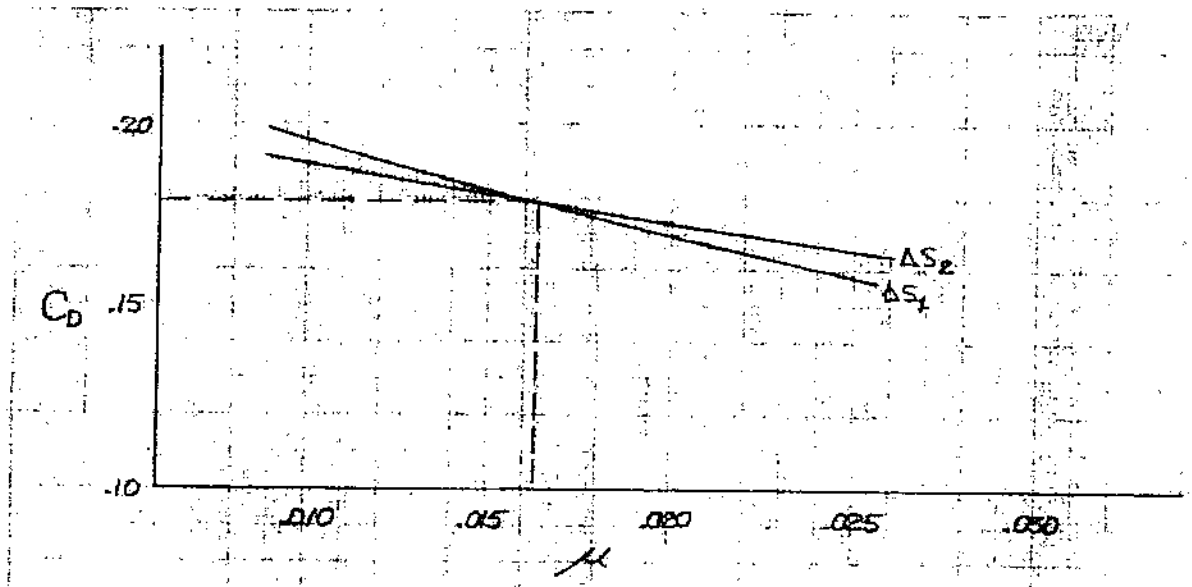

$C_D - \mu$ DETERMINATION
FIGURE AII-4

The results show a rolling friction coefficient of .0163 and a drag coefficient of .179. These values show good correlation to the rolling friction coefficient of .015 and the drag coefficient of .155 obtained from analog data matching of the same data in reference 1.

A computer program which can be used to obtain the information in figure AII-4 directly without going through the laborious task of creating the curves of figure AII-3 is outlined in Appendix III. The results of using this program to analyze the data from figure AII-2 are shown in figure AII-5.

The results of this analysis show μ to be .0163 and C_D to be .179 which is in complete agreement with the results above.

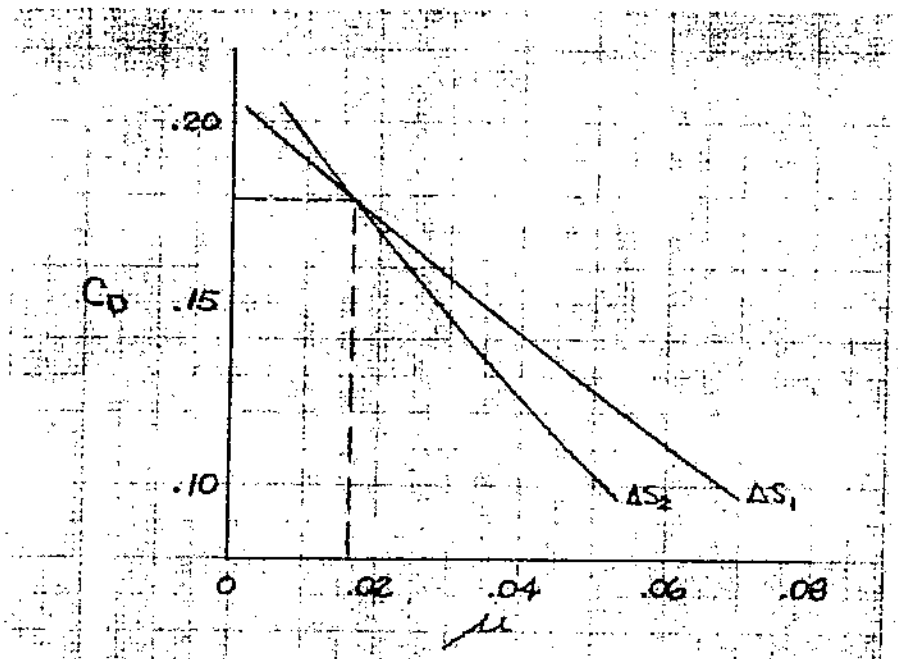

C_D-μ DETERMINATION
COMPUTER METHOD
FIGURE AII-5

APPENDIX III

Friction Coefficient Computer Program

A computer program was developed to compute average friction coefficient (either braking or rolling) from the following known parameters:

Aircraft Wing Area (S)

Aircraft Weight (W_T)

Ambient Density Ratio (σ)

Thrust Characteristics (F_{T_o} & K)

Lift and Drag Coefficients (C_L & C_D)

Initial ground speed (V_{g_1})

Final ground speed (V_{g_2})

Distance Changes (ΔS)

It was programmed for use with the Hewlett-Packard Calculator, Model 9100A but the program is easily adaptable to any other programmable computer. Some of the parameters which are constant for a particular run are programmed in the body of the program. These are F_{T_o}, C_L, ($\sigma S/841.4$) and K. All of the programmable locations set aside for these parameters must be used, i.e., locations 12, 13, 14, 15 and 16 must be used for F_{T_o}, as an example.

The program may require a number of seconds to converge on the desired friction coefficient (μ), depending on how good your initial guess of μ was. If the program takes an excessive time for convergence, it may be diverging instead of converging. If this is the case, the value of the convergence constant (locations 81 thru 84) must be reduced. A new recommended value is:

$$(-5 \times 10^{-6})$$

The computed value of μ will appear in the x (bottom) register, after convergence. Pressing continue will place the program back to step 0b where a new C_D and μ can be entered if desired.

The computer program is shown below.

Title FRICTION COEFFICIENT CONVERGENCE PROGRAM

Date

Name

$$\Delta S = -\frac{W_T}{2gB} \ln\left(\frac{1 + B/A\, V_{g_1}^2}{1 + B/A\, V_{g_2}^2}\right)$$

$$A = F_{T_0} - \mu W_T \qquad B = \frac{\sigma S}{841.4}(\mu C_L - C_D) + K$$

	Step	Key	Code	Display x	Display y	Display z	Storage f	Storage e	Storage d	Storage c	Storage b	Storage a
0	0	CLEAR	20									
	1	STOP	41	ENTER $V_{g_1}^2$	ENTER $V_{g_2}^2$							
	2	x→( )	23									
	3	f	15				$V_{g_1}^2$					
	4	y→( )	40									
	5	e	12					$V_{g_2}^2$				
	6	STOP	41	ENTER ΔS_f	ENTER W_T							
	7	x→( )	23									
	8	b	14								ΔS_f	
	9	y→( )	40									
	a	a	13									W_T
	b	STOP	41	ENTER C_D	ENTER μ (ESTIMATED)							
	c	x→( )	23									
	d	d	17						C_D			
1	0	y→( )	40									
	1	c	16							μ		
	2											
	3											
F_{T_0}	4											
	5											
	6			F_{T_0}								
	7	↑	27		F_{T_0}							
	8	a	13	W_T								
	9	↑			W_T	F_{T_0}						
	a	c	16	μ								
	b	×	36		μW_T							
	c	Roll↑	31	μW_T	F_{T_0}	μ						
	d	−	34		A							

Title

Date page 2

Name

STORAGE
9/A — 9/B

	Step	Key	Code	Display x	Display y	Display z	Storage f	Storage e	Storage d	Storage c	Storage b	Storage a
2	0	y→(	40									
	1	9	11									
	2	↓	25		μ							
C_L	3											
	4											
	5											
	6			C_L								
	7	×	36		μC_L							
	8	d	17	C_D								
	9	−	34		$\mu C_L - C_D$							
$\sigma S/841.4$	a											
	b											
	c											
	d											
3	0			$\sigma S/841.4$								
	1	×	36		$\frac{\sigma S}{841.4}(\mu C_L - C_D)$							
K	2											
	3											
	4											
	5											
	6											
	7											
	8			K			(NOTE: IF K IS NEGATIVE BE SURE TO ENTER-CHG SIGN)					
	9	+	33		B							
	a	↑	27			B						
	b	↓	25		B	B						
	c	y→(	24									
	d	9			A							

Title

Date:

page 3

Name

Step	Key	Code	Display x	Display y	Display z	Storage f	Storage e	Storage d	Storage c	Storage b	Storage a
4 0	↓	25	A	B	B						
1	÷	35		B/A							
2	↑	27		A	B/A						
3	↓	25	A	B/A	B/A						
4	f	15	Vg_1^2								
5	×	36		$B/A\ Vg_1^2$							
6	1	01	1								
7	+	33		$1+B/A\ Vg_1^2$							
8	ROLL	22	B/A	1	$1+B/A\ Vg_1^2$						
9	x⇄y	30	1	B/A							
a	e	12	Vg_2^2								
b	×	36		$B/A\ Vg_2^2$							
c	1	01	1								
d	+	33		$1+B/A\ Vg_2^2$							
0	↓	25	$1+B/A\ Vg_2^2$	$1+B/A\ Vg_2^2$							
1	÷	35		$\left(\frac{1+B/A\ Vg_1^2}{1+B/A\ Vg_2^2}\right)$							
2	↓	25	( )								
3	ln x	65	ln( )								
4	↑	27		ln( )							
5	a	13	W_T								
6	×	36		W_T ln( )							
7	↑	27			W_T ln( )						
8	y^x( )	24									
9	9	11		B							
a	↓	25	B	W_T ln( )							
b	÷	35		$\frac{W_T}{B}$ ln( )							
c	6	06									
d	4	04									

Title

Date

Name

page 4

Step		Key	Code	Display x	Display y	Display z	Storage f	e	d	c	b	a
6	0	•	21									
	1	3	03									
	2	5	05									
	3	CHG SIGN	32	$-2g$								
	4	÷	35		ΔS							
	5	b	14	ΔS_f								
	6	−	34		$\Delta S - \Delta S_f$							
	7	↑	27			$\Delta S - \Delta S_f$						
	8	↓	25		$\Delta S - \Delta S_f$	$\Delta S - \Delta S_f$						
	9	|y|	55		$\lvert \Delta S - \Delta S_f \rvert$							
	a	1	01									
	b	0	00	10								
	c	IF x<y	52									
	d	8	10									
7	0	0	00									
	1	c	16									
	2	STOP	41	READ OUT μ_t								
	3	GO TO	44									
	4	0	00									
	5	b	14									
	6											
	7											
	8											
	9											
	a											
	b											
	c											
	d											

HEWLETT · PACKARD

Title

Date

Name

page 5

Step	Key	Code	Display x	Display y	Display z	Storage f	Storage e	Storage d	Storage c	Storage b	Storage a
8 0	↓	25		$\Delta S - \Delta S_f$							
1	1	01									
2	ENTER EXP	26									
3	5	06									
4	CHG SIGN	32	1×10^{-5}								
5	×	36		$\Delta\mu$							
6	C	16	μ								
7	+	33		μ_{NEW}							
8	GOTO	44									
9	1	01									
a	0	00							μ_{NEW}		
b											
c											
d											
0											
1											
2											
3											
4											
5											
6											
7											
8											
9											
a											
b											
c											
d											