Designing For Unknown Requirements

Building boxes with flexibility in mind

Justin Denning
812th AITS
U.S. Air Force – Edwards AFB

DISTRIBUTION STATEMENT A - Approved for public release; distribution is unlimited. 412TW-PA-21130

Standard PCB Design Process

1. Receive Requirements (or the more common hand waived desires)
2. Search for existing equipment that will satisfy the need
3. Develop overall design plan
4. Research components
5. Generate a schematic
6. Peer review the design
7. Generate a PCB layout
8. Perform validation checks
9. Fabricate the PCB
10. Populate the PCB
11. Checkout and validate the design

Ideal PCB Design Process

1. Receive Requirements (or the more common hand waived desires)
2. Search for existing equipment that will satisfy the need
3. Develop overall design plan
4. Research components
5. Generate a schematic
6. Peer review the design
7. Generate a PCB layout
8. Perform validation checks
9. Fabricate the PCB
10. Populate the PCB
11. Checkout and validate the design

DONE!

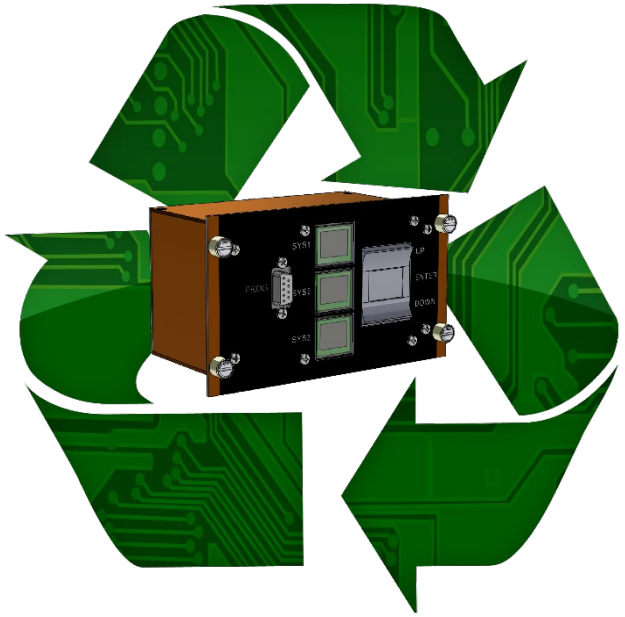

Design Philosophy

- New designs must meet the current design requirements
  - If it doesn't, it is an obvious fail
- Anything that can be accomplished in firmware, use it.
  - Hardware is far harder to change than firmware code.
  - Code will likely need to be updated with a new hardware revision anyway, so prefer skipping the hardware effort
- Focus on hardware flexibility
  - Make simple additions to a design that allow for flexibility in the future
    - This could avoid a complete hardware redesign or revision during the next project
  - Select components that have more capabilities than are needed
    - We work in very low quantities, a part costing $1 instead of the less capable $0.70 part is well worth it for future flexibility

Flexible Design Example

Original design to be used as a Telemetry Control Panel (TCP)

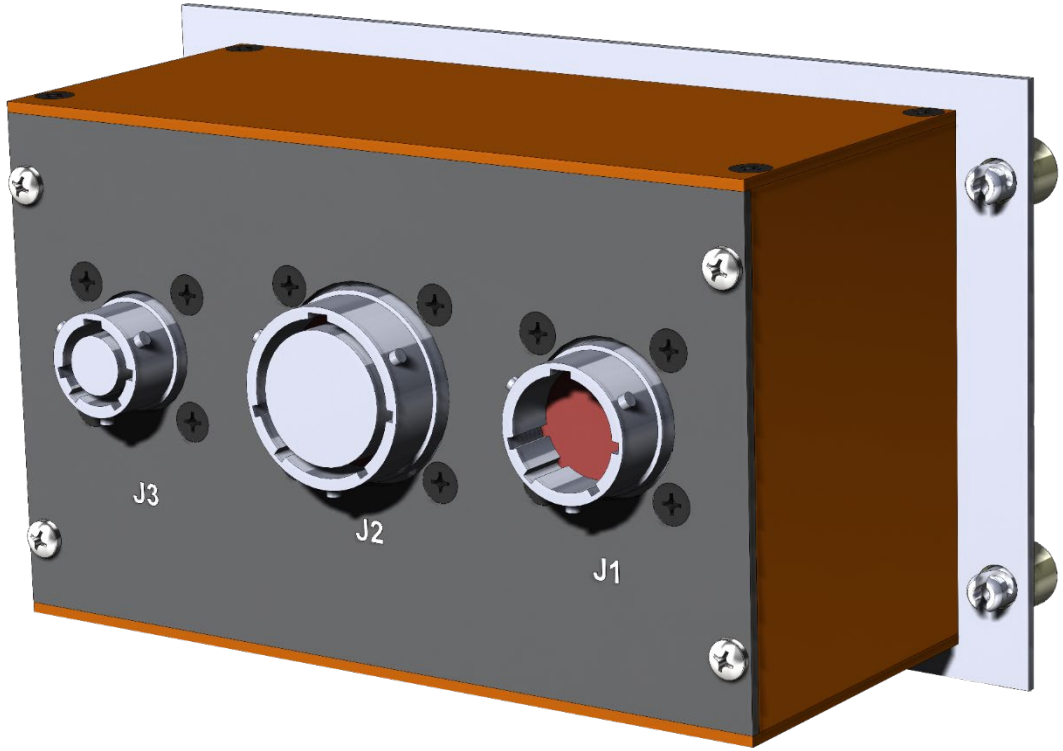

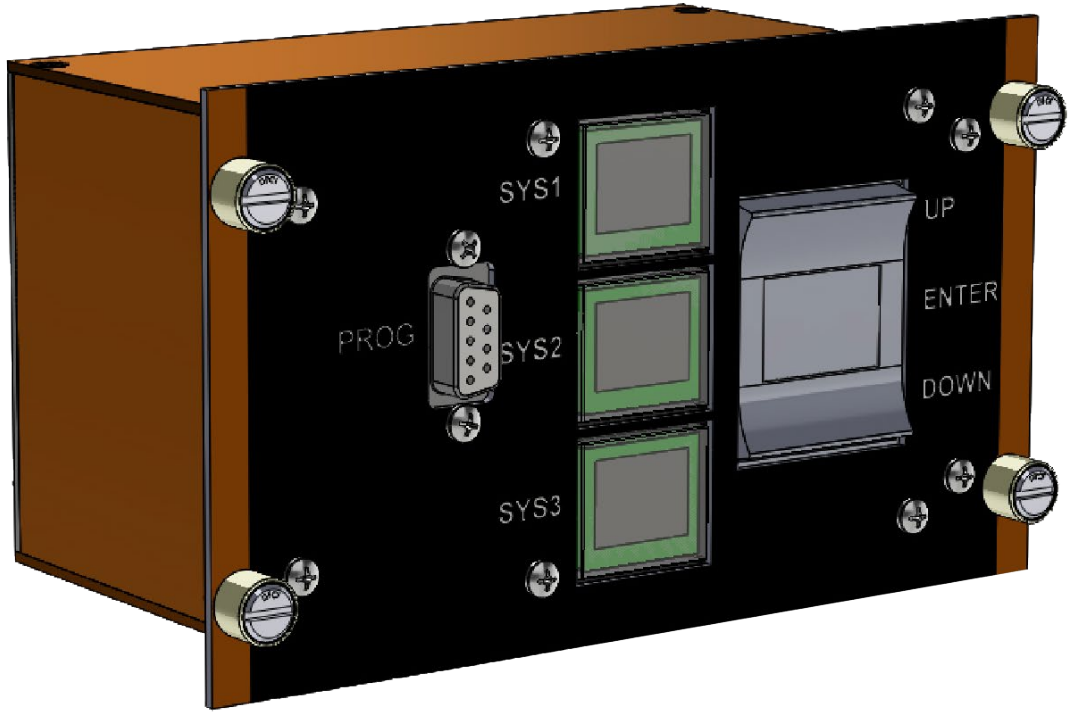

Flexible Design Example

Capabilities

Fully programmable with

- 6x full duplex RS-422 serial connections
  - Capable of up to 250Kbps
- 8x optically isolated discrete outputs
  - Configurable to pull-up or pull-down
  - Capable of 700mA ON current, and 60VDC open circuit voltage
- 10x optically isolated discrete inputs
  - Can be used in active-high or active-low configurations
- 10/100BASE-T Ethernet (not a requirement)
- 3x full-color 64x48 pixel display buttons
- Rocker switch with 96x64 pixel monochrome display
- 1x front panel RS232 port for configuration or control

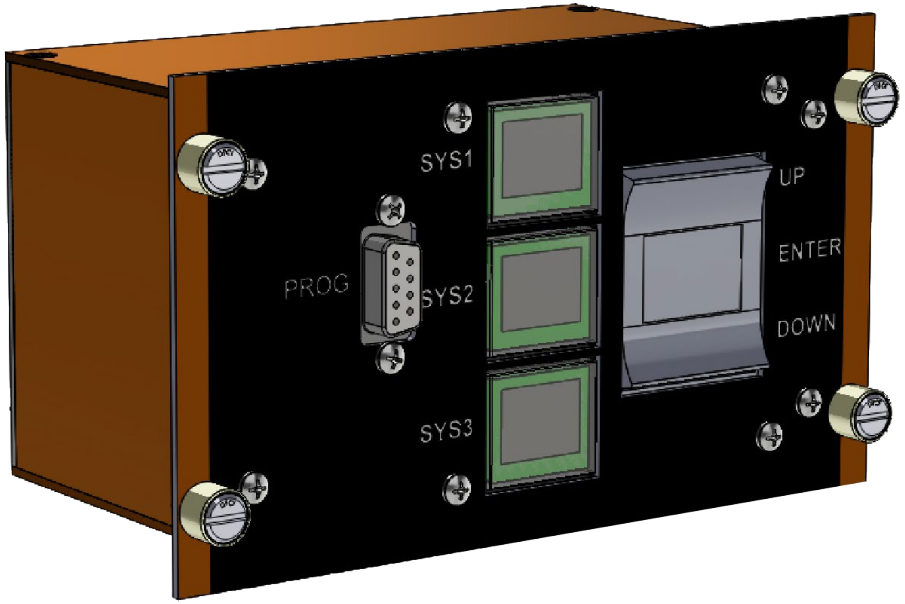

Flexible Design Example

Designed as a stack of 3 PCBs

Aircraft Interface PCB

- Contains all the circuitry that interacts with the external world

Processor/Power PCB

- Contains all the power filtering, conditioning, regulation, and the microcontroller (with most of its pins broken out to board-to-board connectors)

User Interface PCB

- Contains all the circuitry, buttons, displays, etc. that the user interacts with.

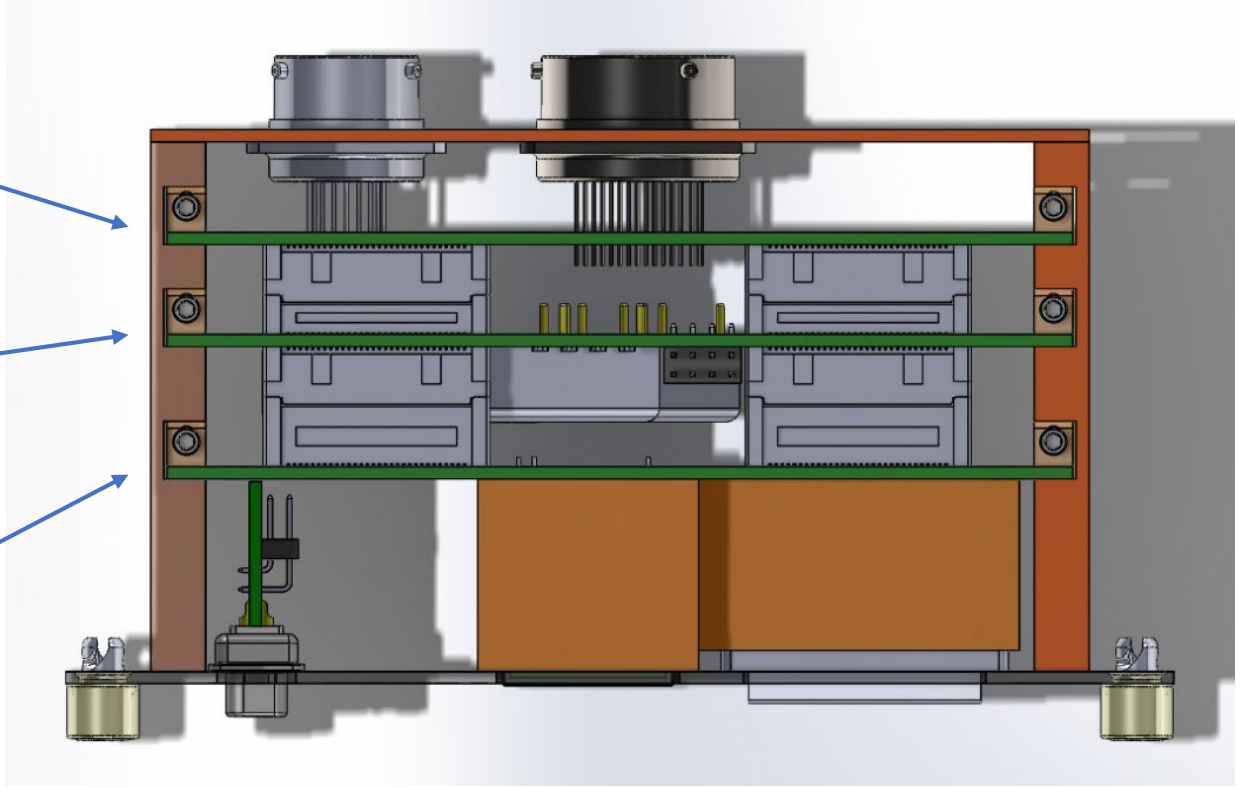

Flexible Design Example

Independent Functions

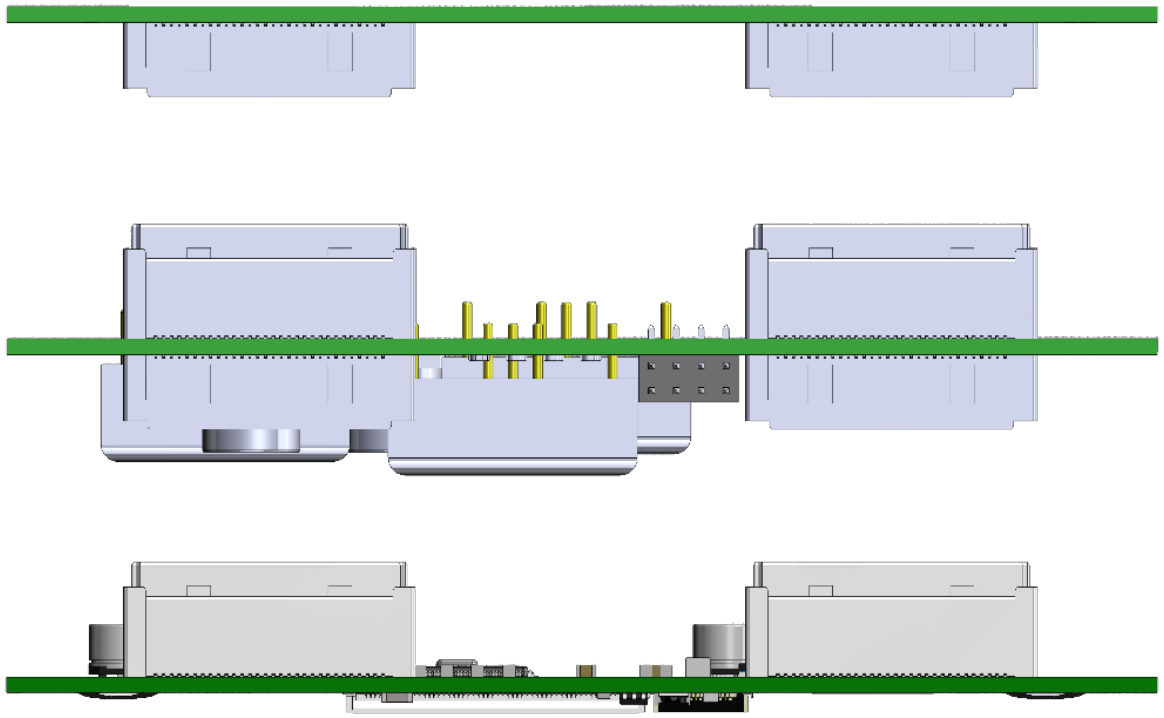

Flexible Design Example

Design Benefits

- Separates the panel's functions into three different parts
  1. External interface
  2. Main processor and power handling
  3. User interface
- Each part can be fully validated and used as a known good design for future boxes.
  - The power/processor board was validated, then used in future designs without the need for the extensive testing initially required
- Everything is designed around the microcontroller
  - This allows the flexibility of the microcontroller to be fully exploited

Flexible Design Example

32bit ARM® Cortext-M4F Core from Texas Instruments

- Built in Flash and SDRAM memory
- 128pin, 90 GPIO
- Multiplexed pin functions
- Hardware peripherals
  - 8x UART
  - 4x SPI (quad SPI supported)
  - 10x I^2C
  - 1x Ethernet (10/100 Mbps)
  - 1x USB (Full speed)
  - 32x µDMA
  - 8x Timers (32 or 2x 16bit each)
  - 4x PWM
  - 2x ADC (multiplexed to 20 pins)
  - 2x CAN
  - AES/DES Encryption/Decryption
  - MD5/SHA Hashing
  - 1x Quadrature Encoder input

Microcontroller

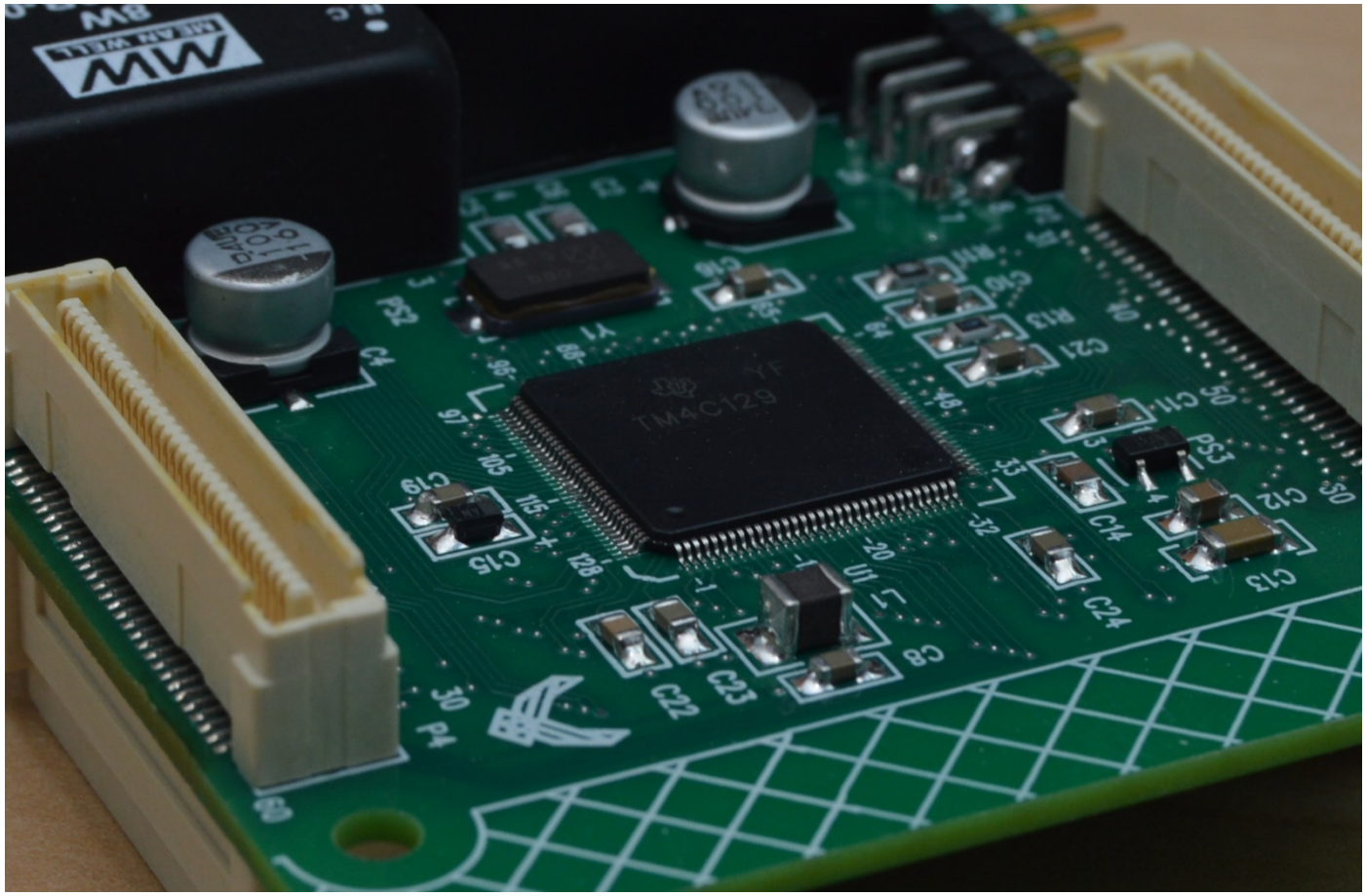

Flexible Design Example

Updated user interface for the TCP

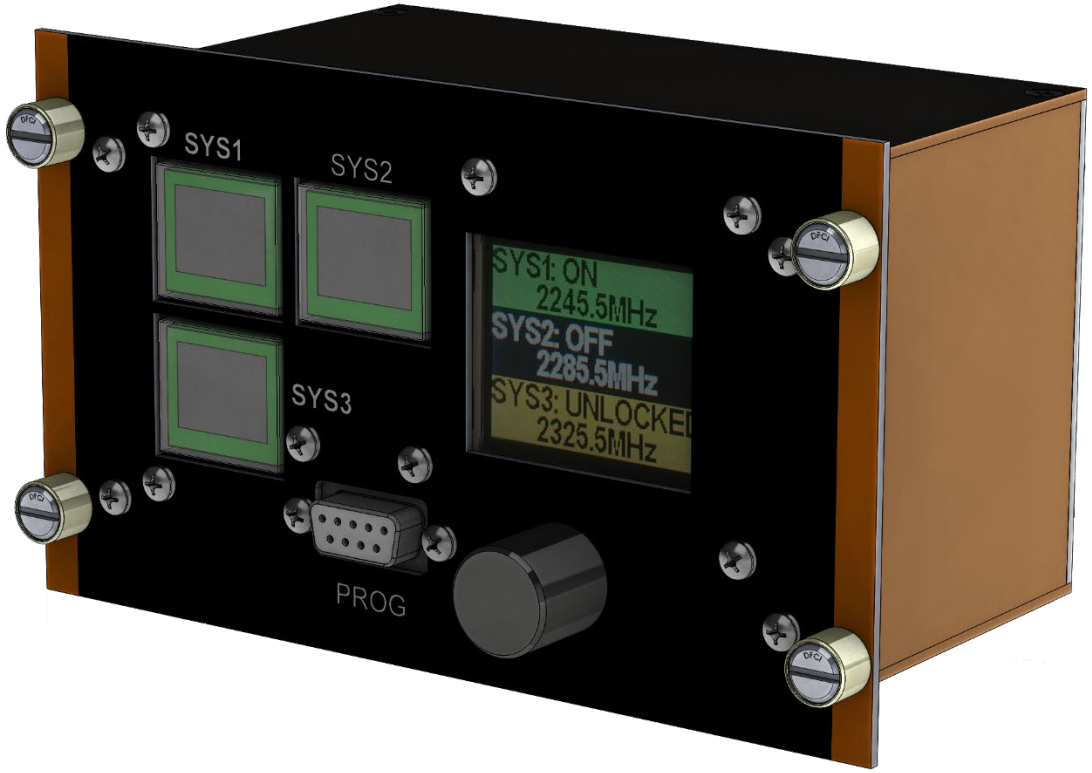

Flexible Design Example

"No hardware change" use as an Ethernet Data Translator
(we just removed the user interface PCB)

Flexible Design Example

Latest update – the SI Control Panel
(alternate user interface PCB currently in the manufacturing phase)

Flexible Design Example

Known Future Updates

- We are currently designing a single aircraft interface PCB that will support:
  - Data capture and conversion of military radio control data to Ethernet packets
  - PCM data generation for lab and ground testing
  - PCM reception with parameter display or relay out the Ethernet port
  - Wireless
    - Control
    - Remote display capability
    - Remote data collection

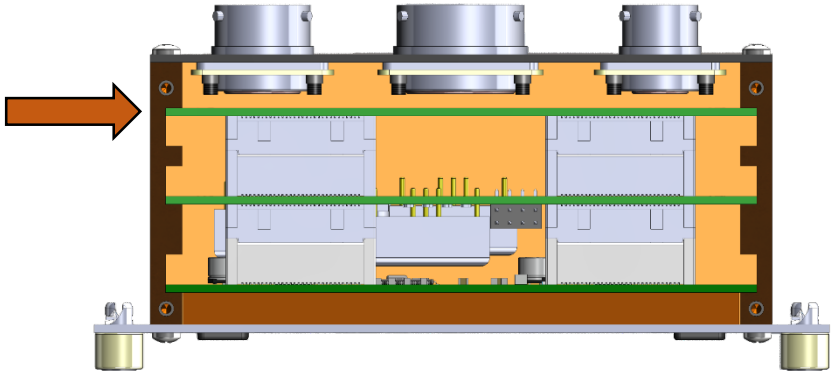

Conclusion

- Modern designs leveraging firmware driven features are much easier to modify
- Including useful capabilities, not immediately needed, could save significant design time in the future
- The ability to adapt to changing requirements in the flight test world is a necessity

Conclusion

And…

Microcontrollers Rock!

Thank You

Justin Denning
812th AITS

"Given the opportunity, Justin would put a microcontroller in a hammer"
-Douglas Pilcher