EVOLUTION OF THE B-70

TSP65-3933

1

TFD 65-491

B-70 HISTORY

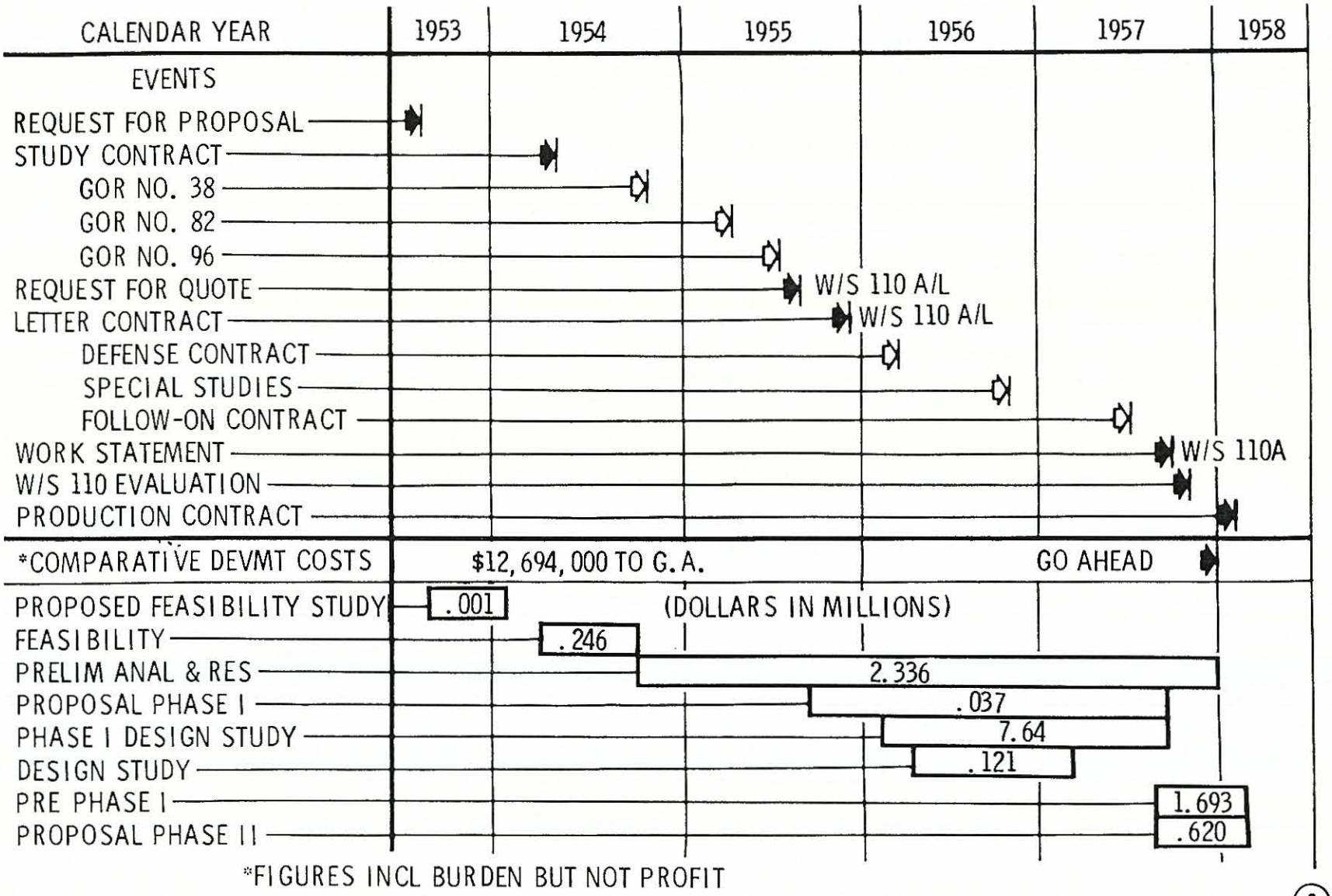

*FIGURES INCL BURDEN BUT NOT PROFIT

TSP65-3928

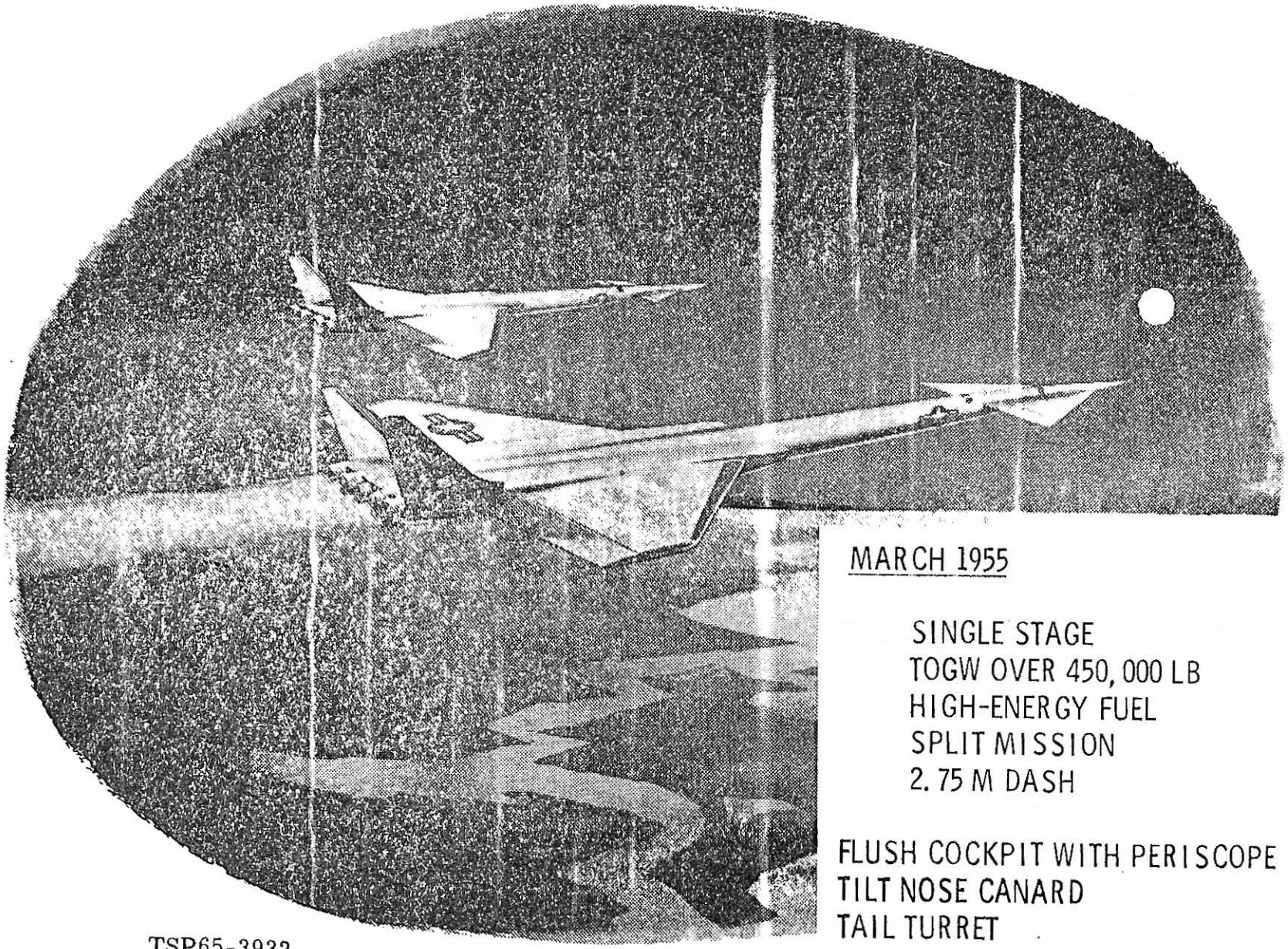

TSP65-3932

MARCH 1955

SINGLE STAGE
TOGW OVER 450,000 LB
HIGH-ENERGY FUEL
SPLIT MISSION
2.75 M DASH

FLUSH COCKPIT WITH PERISCOPE
TILT NOSE CANARD
TAIL TURRET

GENERAL ARRANGEMENT - SAC BOMBER - HIGH ENERGY FUEL - SINGLE STAGE MISSION

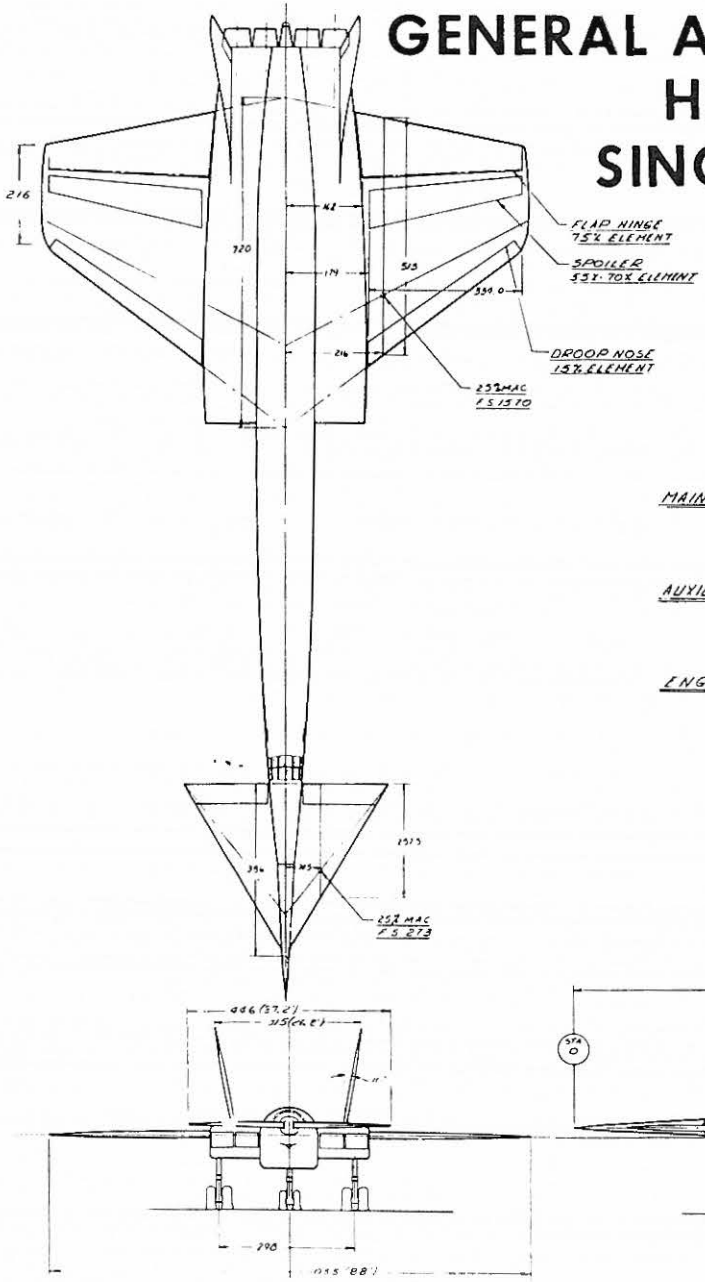

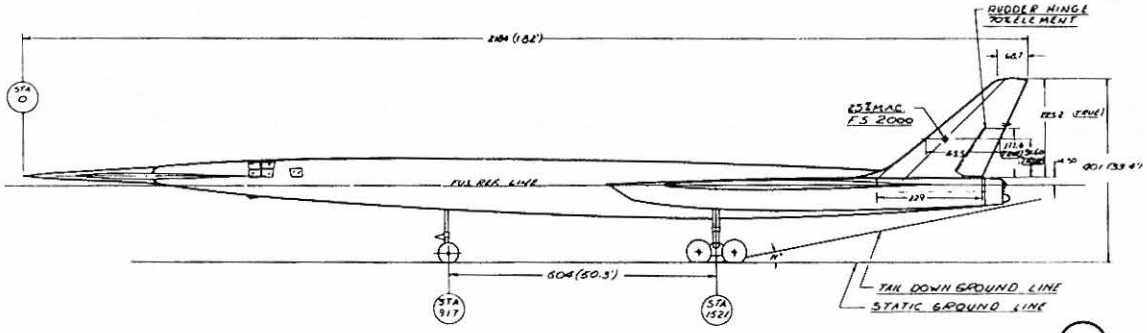

MAIN ALIGHTING GEAR (DUALS TANDEM)

TIRE SIZE	19.00 - 23
TIRE TYPE	III (LP)

AUXILIARY ALIGHTING GEAR (DUALS)

TIRE SIZE	44 - 13
TIRE TYPE	VII B (HP)

ENGINE DESIGNATION

GENERAL ELECTRIC 97.4% of GE-X-61(a)

VERTICAL TAILS (2)

AREA (INCLUDING RUDDER) EACH	232 SQ FT
ASPECT RATIO	1.50
TAPER RATIO	.30
SWEEPBACK (25% ELEMENT)	45°
AIRFOIL (ROOT) NACA 66005.5 (NAA MOD)	
AIRFOIL (TIP) NACA 66001.5 (NAA MOD)	
RUDDER AREA EACH	42 SQ FT
RUDDER DEFLECTION	± 20°

WING

AREA (INCLUDING FLAPS)	3430 SQ FT
ASPECT RATIO	2.25
TAPER RATIO	.30
SWEEPBACK (25% ELEMENT)	27°
AIRFOIL (ROOT & TIP) NACA 66003 (NAA MOD)	
FLAP AREA	489 SQ FT
FLAP DEFLECTION	32°

CANARD SURFACE

AREA (INCLUDING TRIMMERS)	599 SQ FT
ASPECT RATIO	2.31
TAPER RATIO	0
SWEEPBACK (25% ELEMENT)	52° 22'
AIRFOIL (ROOT & TIP) NACA 66A003 (NAA MOD)	
DEFLECTION	± 25°
TRIMMER AREA	102 SQ FT
TRIMMER DEFLECTION	35°

TSP65-3934

INBOARD PROFILE - SAC BOMBER - HIGH ENERGY FUEL - SINGLE STAGE MISSION

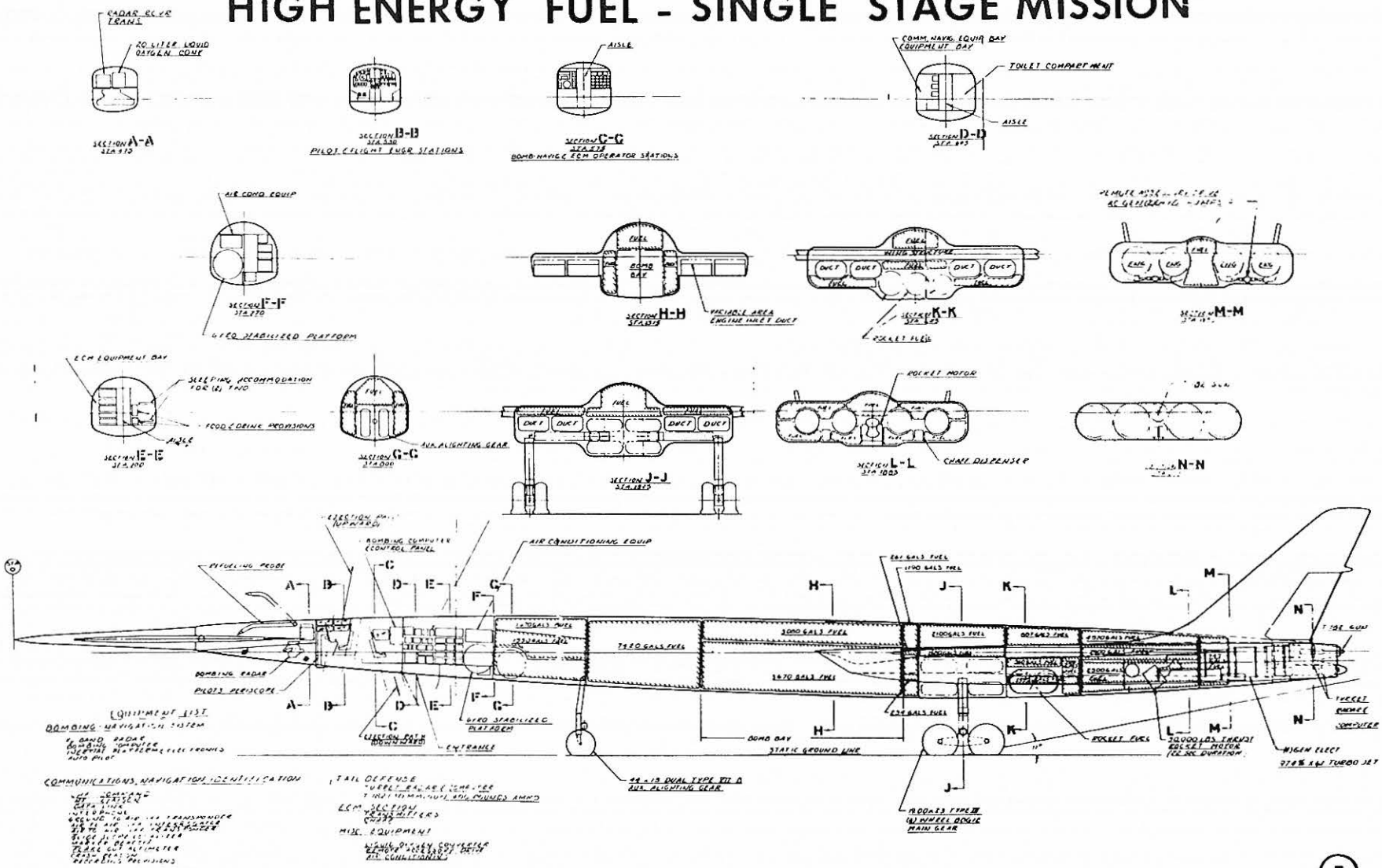

TSP65-3937

GENERAL ARRANGEMENT - SAC BOMBER - HIGH ENERGY FUEL - TWO STAGE MISSION

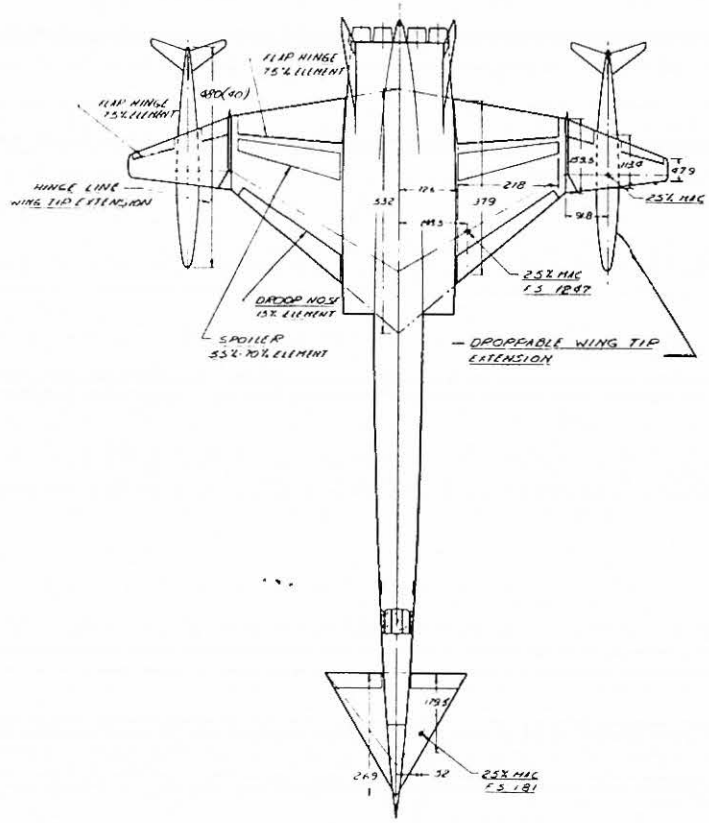

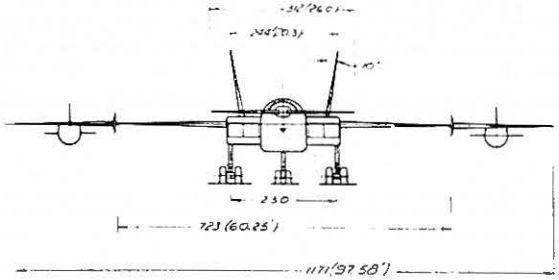

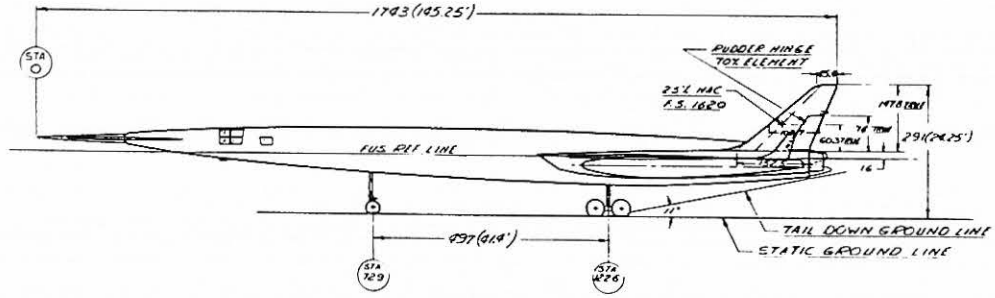

WING

AREA (INCLUDING FLAPS)	1736 SQ.FT.
ASPECT RATIO	2.09
TAPER RATIO	.30
SWEEPBACK (25% ELEMENT)	30°54'
AIRFOIL (ROOT & TIP) NACA 66003	NAA MOD.
FLAP AREA	240 SQ.FT.
FLAP DEFLECTION	32°

CANARD SURFACE

AREA (INCLUDING TRIMMERS)	292 SQ.FT.
ASPECT RATIO	2.31
TAPER RATIO	0
SWEEPBACK 25% ELEMENT	52°22'
AIRFOIL (ROOT & TIP) NACA 66003	NAA MOD
DEFLECTION	±25°
TRIMMER AREA	40 SQ.FT
TRIMMER DEFLECTION	35°

VERTICAL TAILS (2)

AREA (INCLUDING RUDDER) (EACH)	100.1 SQ.FT
ASPECT RATIO	1.5
TAPER RATIO	.3
SWEEPBACK 25% ELEMENT	45°
AIRFOIL (ROOT) NACA 66015.55	NAA MOD.
AIRFOIL (TIP) NACA 66015	NAA MOD
RUDDER AREA EACH	18 SQ.FT
RUDDER DEFLECTION	±20°

MAIN ALIGHTING GEAR (DUALS TANDEM)

TIRE SIZE	40 × 12
TIRE TYPE	VII E (E.H.F.)

WING (TIP EXTENSION)

AREA (INCLUDING FLAPS) EACH	161 SQ.FT
ASPECT RATIO	2.17
TAPER RATIO	.30
SWEEPBACK (25% ELEMENT)	0°
AIRFOIL (ROOT & TIP) NACA 66007	NAA MOD.
FLAP AREA	23 SQ.FT
FLAP DEFLECTION	+50°-30°

HORIZONTAL TAIL (TIP EXTENSION)

AREA	33 SQ.FT
ASPECT RATIO	5.0
TAPER RATIO	.30
SWEEPBACK (25% ELEMENT)	35°
AIRFOIL (ROOT & TIP) NACA 66007	NAA MOD
DEFLECTION	+20°-10°

VERTICAL TAIL (TIP EXTENSION)

AREA (INCLUDING RUDDER)	11 SQ.FT.
ASPECT RATIO	2.0
TAPER RATIO	.30
SWEEPBACK (25% ELEMENT)	35°
AIRFOIL (ROOT & TIP) NACA 66007	NAA MOD

AUXILIARY ALIGHTING GEAR (DUALS)

TIRE SIZE	32 × 8.8
TIRE TYPE	VII E (E.H.F.)

TIP EXTENSION GEAR (DROPOFF) (DUALS)

TIRE SIZE	32 × 8.8
TIRE TYPE	VII E (E.H.F.)

ENGINE DESIGNATION

GENERAL ELECTRIC 59.7% of 6L-X-61(4)

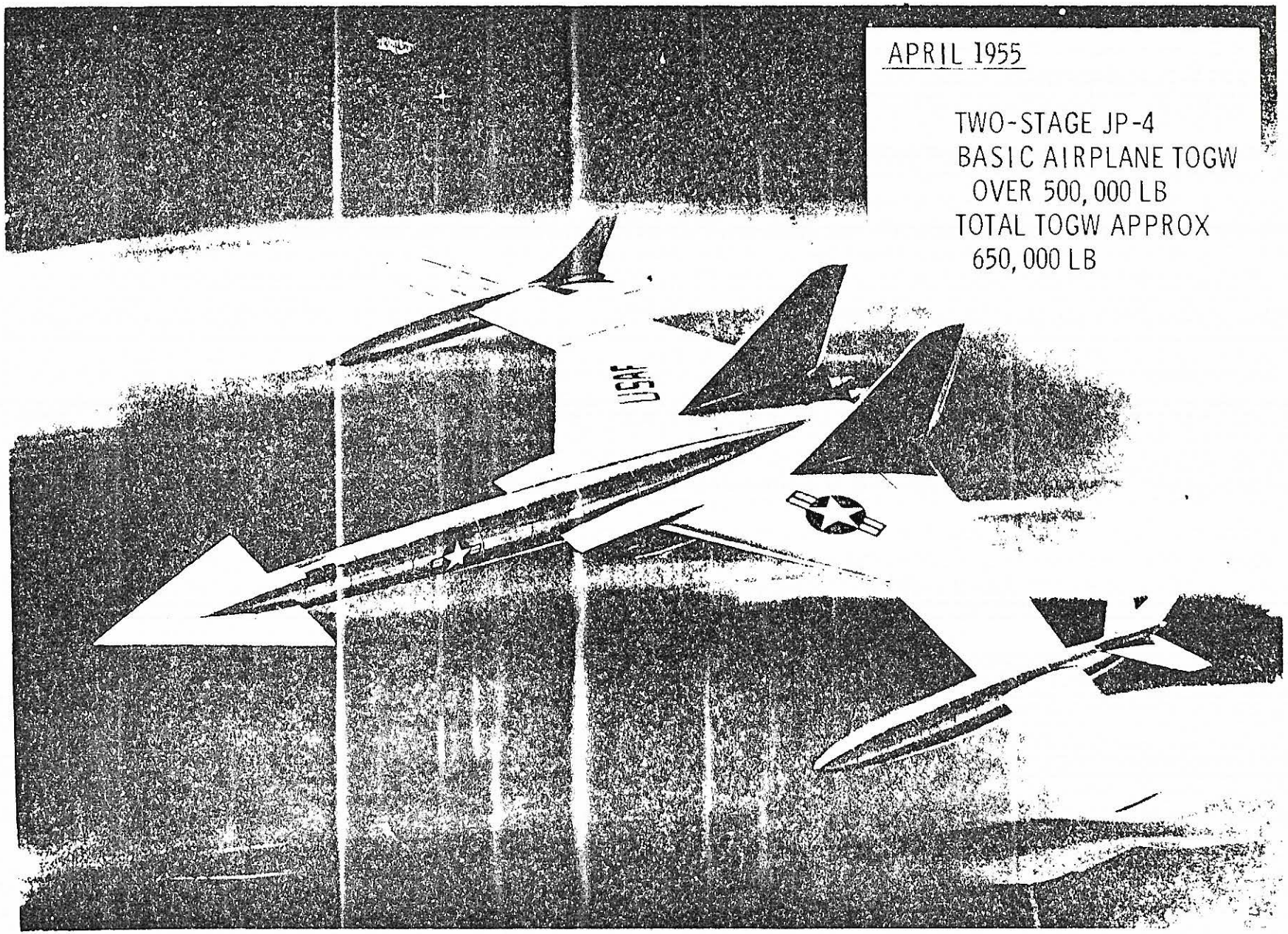
APRIL 1955
TWO-STAGE JP-4
BASIC AIRPLANE TOGW
OVER 500,000 LB
TOTAL TOGW APPROX
650,000 LB
USAF

WSS 22 9374A

GENERAL ARRANGEMENT - SAC BOMBER - JP-4 FUEL - TWO STAGE MISSION

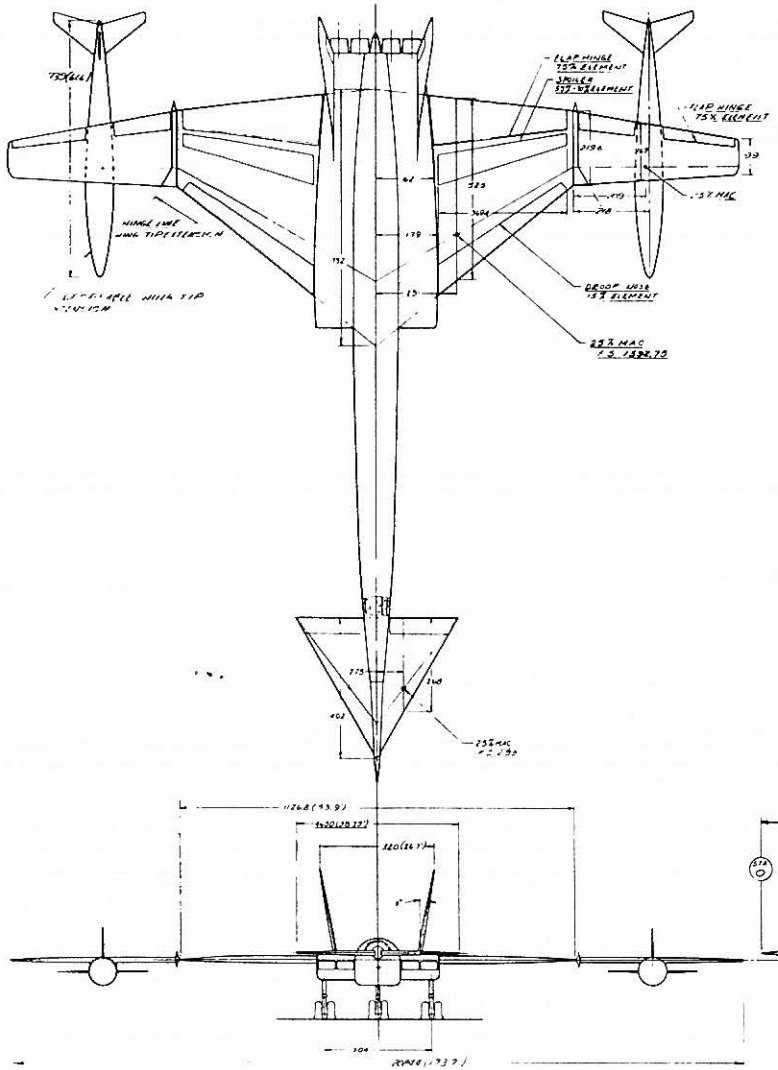

WING

AREA (INCLUDING FLAPS)	3725 SQ FT
ASPECT RATIO	2.35
TAPER RATIO	.30
SWEEPBACK (25% ELEMENT)	30°
AIRFOIL (ROOT & TIP)	NACA 66003 NAA MOD
FLAP AREA	545 SQ FT
FLAP DEFLECTION	52°

CANARD SURFACE

AREA (INCLUDING TRIMMER)	650 SQ FT
ASPECT RATIO	2.31
TAPER RATIO	0
SWEEPBACK (25% ELEMENT)	52° 22'
AIRFOIL (ROOT & TIP)	NACA 66003 NAA MOD
DEFLECTION	± 25°
TRIMMER AREA	118.50 FT²
TRIMMER DEFLECTION	± 25°

VERTICAL TAILS (2)

AREA (INCLUDING RUDDER) EACH	251.9 SQ FT
ASPECT RATIO	1.5
TAPER RATIO	.30
SWEEPBACK (25% ELEMENT)	45°
AIRFOIL (ROOT)	NACA 66005.5 NAA MOD
AIRFOIL (TIP)	NACA 66001.5 NAA MOD
RUDDER AREA EACH	48.50 FT²
RUDDER DEFLECTION	± 20°

WING (TIP EXTENSION)

AREA (INCLUDING FLAPS)	530 SQ FT
ASPECT RATIO	3.0
TAPER RATIO	.851
SWEEPBACK (25% ELEMENT)	0
AIRFOIL (ROOT & TIP)	NACA 66007 NAA MOD
FLAP AREA	100 SQ FT
FLAP DEFLECTION	+30° -30°

HORIZONTAL TAIL (TIP EXTENSION)

AREA	100 SQ FT
ASPECT RATIO	4.0
TAPER RATIO	.30
SWEEPBACK (25% ELEMENT)	35°
AIRFOIL (ROOT & TIP)	NACA 66007 NAA MOD
DEFLECTION	+20° -10°

VERTICAL TAIL (TIP EXTENSION)

AREA (INCLUDING RUDDER)	36.3 SQ FT
ASPECT RATIO	2.0
TAPER RATIO	.50
SWEEPBACK (25% ELEMENT)	35°
AIRFOIL (ROOT & TIP)	NACA 66007 NAA MOD

MAIN LIGHTING GEAR (DUAL TANDEM)

TIRE SIZE	
TIRE PRESSURE	

AUXILIARY LIGHTING GEAR (DUAL)

TIRE SIZE	
TIRE PRESSURE	

TIP EXTENSION GEAR (DUAL TANDEM)

TIRE SIZE	15.5 x 22
TIRE PRESSURE	[illegible]

ENGINE ELIMINATION

SERIES ELECTRIC [illegible]

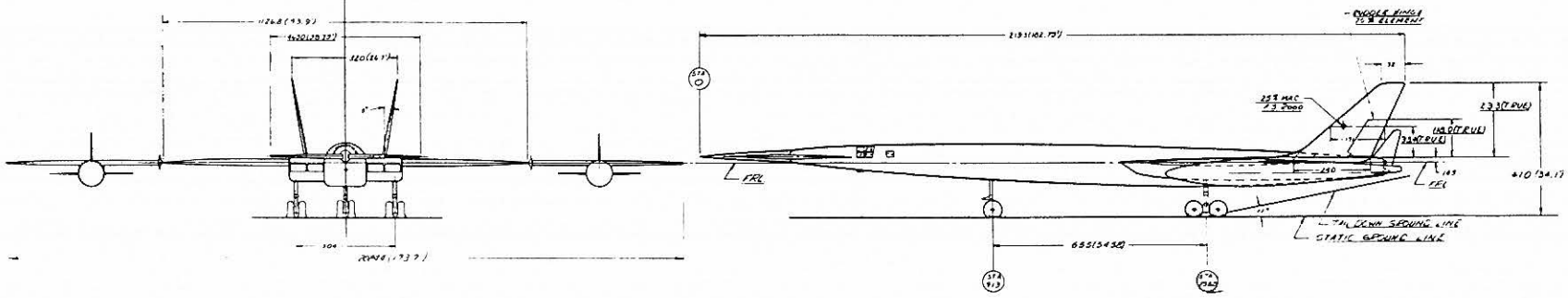

TSP65-3929

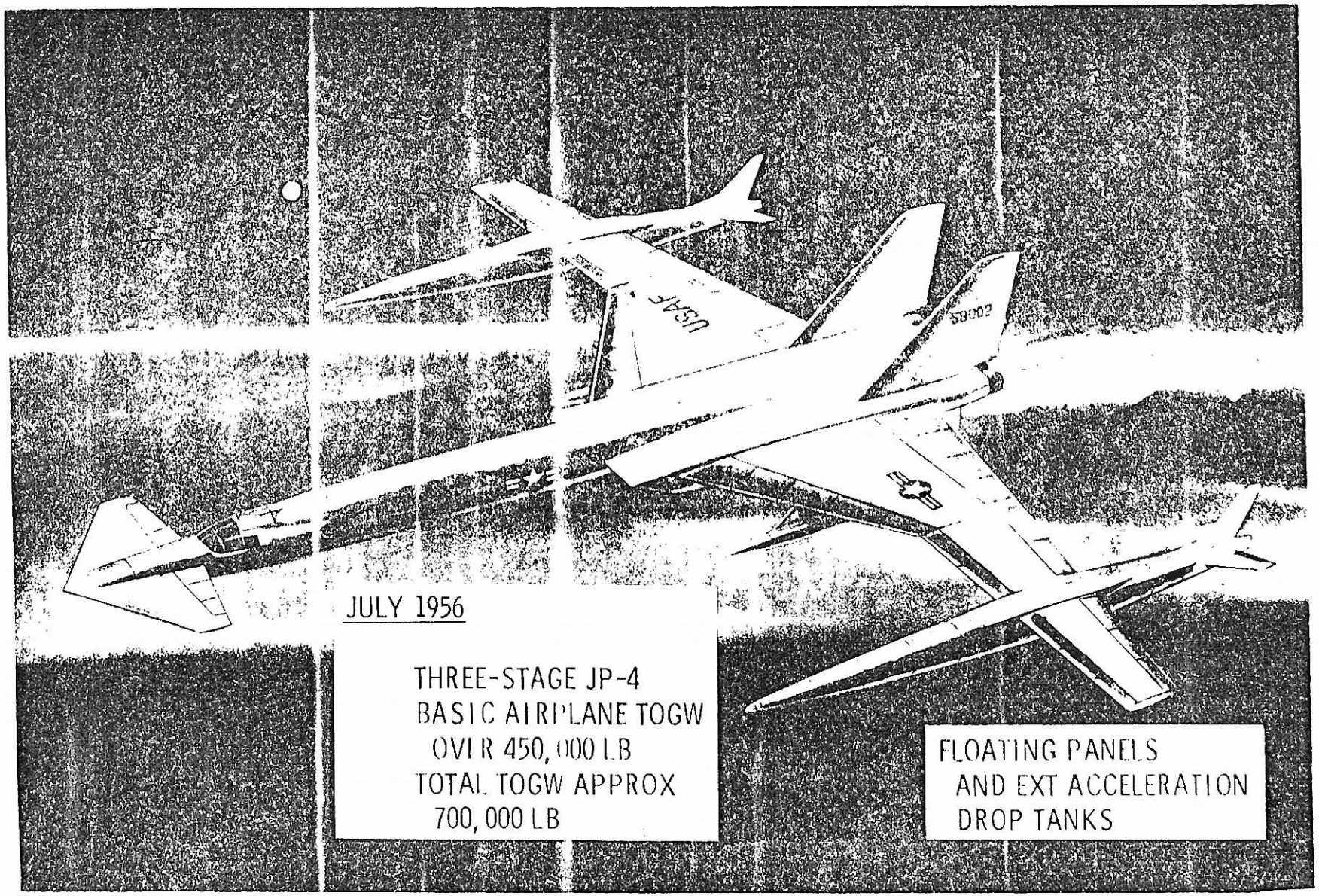
USAF
58002
JULY 1956
THREE-STAGE JP-4
BASIC AIRPLANE TOGW
OVER 450,000 LB
TOTAL TOGW APPROX
700,000 LB
FLOATING PANELS
AND EXT ACCELERATION
DROP TANKS

F 55 00 6622 A

PILOT & COPILOT DISPLAY

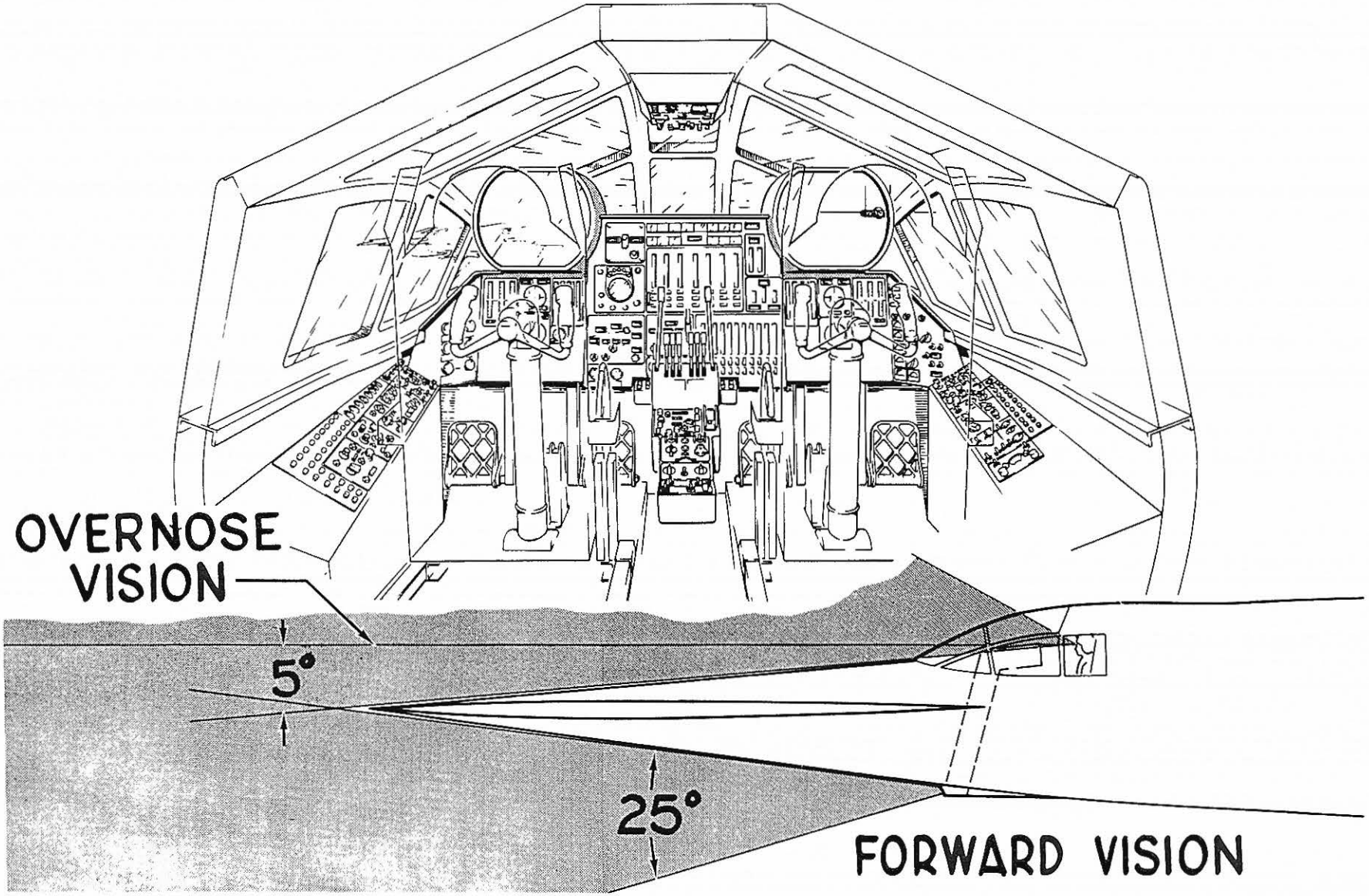

FSS-00-5679

VISION

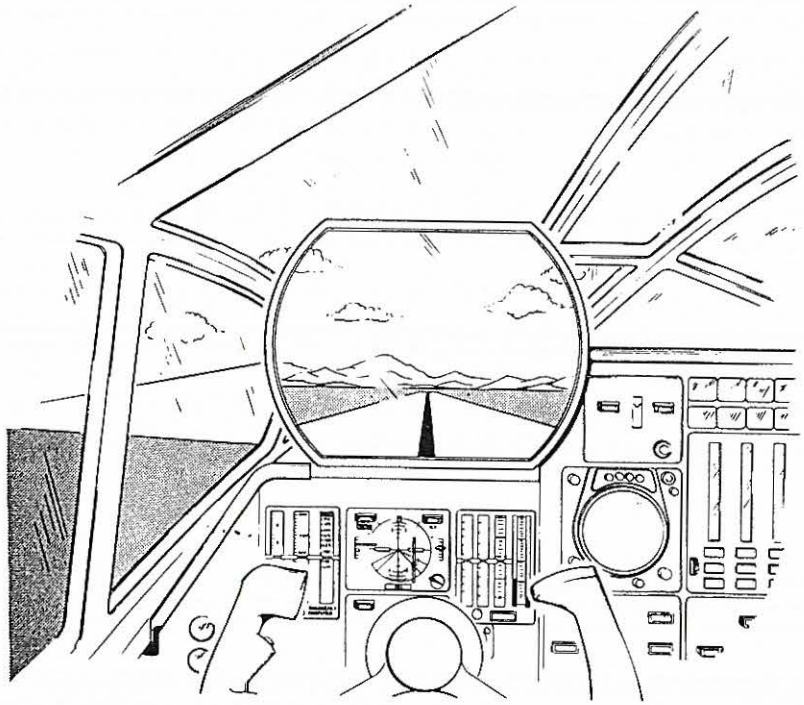

TOUCHDOWN
OR LANDING

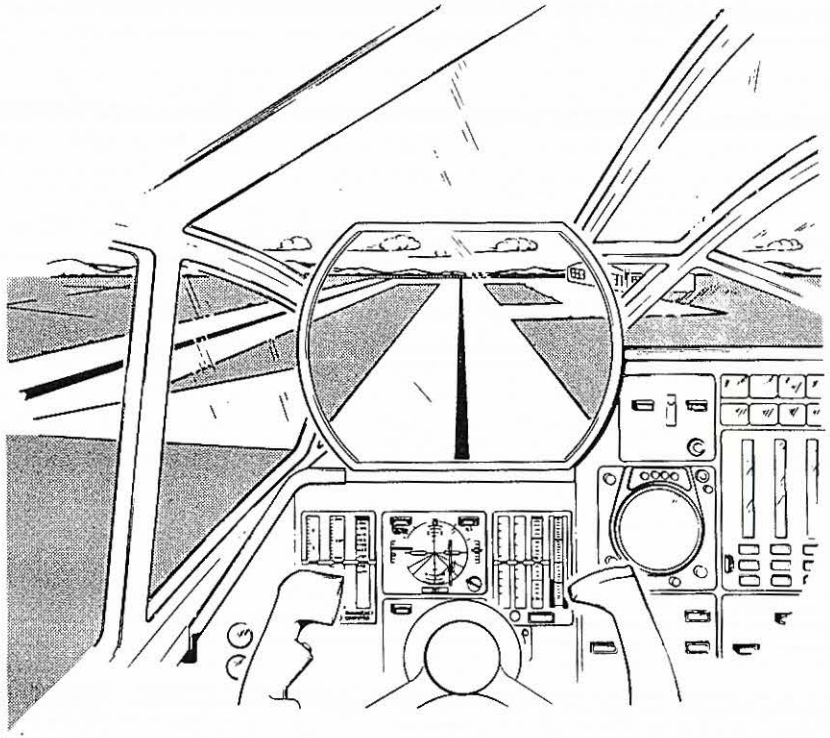

TAXI

FSS-00-5664

GENERAL ARRANGEMENT - SAC BOMBER - SYSTEM 110A-D

MAIN ALIGHTING GEAR (4 WHEEL BOGIE)	
TIRE TYPE	VII E.M.P.
TIRE SIZE	52 × 16
PLY RATING	32
ROLLING RADIUS	22.2
FLAT TIRE RADIUS	16.5

AUXILIARY ALIGHTING GEAR NOSE (DUALS)	
TIRE TYPE	VII E.M.P.
TIRE SIZE	40 × 12
PLY RATING	26
ROLLING RADIUS	16.6
FLAT TIRE RADIUS	12.2

AUXILIARY ALIGHTING GEAR-FLOATING PANEL	
TIRE TYPE (DUALS)	VII E.M.P.
TIRE SIZE	56 × 16
PLY RATING	24
ROLLING RADIUS	24.1
FLAT RADIUS	19.2

WING	
AREA	3760 SQ FT
ASPECT RATIO	2.25
TAPER RATIO	3
SWEEPBACK (25% ELEMENT)	25° 30'
AIRFOIL (ROOT & TIP)	NACA 66A002.15
INCIDENCE	0
DIHEDRAL	0
OUTBD AILERON AREA (LOW SPEED ONLY)	200 SQ FT
OUTBD AILERON TRAVEL (TRDT TRAP DN POS)	+15 -25°
INBD AILERON AREA (HI SPEED ONLY)	342 SQ FT
INBD AILERON TRAVEL	±15°
T.E. FLAP AREA (ALL AILERONS DN)	542 SQ FT
T.E. FLAP TRAVEL	25° DN
L.E. FLAP AREA 196 SQ FT PER SIDE	392 SQ FT
L.E. FLAP TRAVEL	25°

FLOATING PANEL	(2 REQ)
TOTAL ASPECT RATIO (ALL MVBL AREA	6.88
AREA (PER SIDE)	690 SQ FT
ASPECT RATIO	3.45
TAPER RATIO	3
SWEEP (MID & 25% ELEMENT)	5°
AIRFOIL (ROOT & TIP)	NACA 66A006
INCIDENCE	0
DIHEDRAL (FREE FLOATING)	NORMALLY 0
T.E. FLAP AREA (PER PANEL)	138 SQ FT
T.E. FLAP TRAVEL	UP 25 DN 45
L.E. FLAP AREA	98 SQ FT
L.E. FLAP TRAVEL	5° TO 25°

FLOATING PANEL-HORIZONTAL STABILIZER	(2 REQ)
AREA (PER TANK)	81 SQ FT
ASPECT RATIO	2.35
TAPER RATIO	3
SWEEPBACK (25% ELEMENT)	15°
AIRFOIL	NACA 66A006
TRAVEL (ALL MOVABLE)	NOSE UP 25° — NOSE DN 2°

FLOATING PANEL VERTICAL STABILIZER	(2 REQ)
AREA (PER TANK)	40 SQ FT
ASPECT RATIO	1.5
TAPER RATIO	3
SWEEPBACK (25% ELEMENT)	45°
AIRFOIL	NACA 66A006

FORWARD HORIZONTAL	
AREA	496 SQ FT
ASPECT RATIO	3
TAPER RATIO	2
SWEEPBACK (25% ELEMENT)	24.5
AIRFOIL	NACA 66A009
TRAVEL	NOSE UP 12° — NOSE DN 12
FLAP AREA (44.3 PER SIDE)	88.6 SQ FT
FLAP TRAVEL	40°

ENGINE DESIGNATION	
GE 52 28A 81.5 SIZE	6 REQD
S.C. STATIC THRUST 22,760 POUNDS EACH	

VERTICAL STABILIZER (ALL MOVABLE)	(2 REQ)
AREA (PER SIDE)	160 SQ FT
ASPECT RATIO	1.
TAPER RATIO	3
SWEEPBACK (25% ELEMENT)	45°
AIRFOIL (ROOT)	NACA 64A 003.25
AIRFOIL (TIP)	NACA 64A 002.5
TRAVEL	LEFT 8° - RIGHT 8°

VENTRAL STABILIZER (FOLDS FOR TO & LANDING)	(2 REQ)
AREA (PER SIDE)	130 SQ FT
ASPECT RATIO	3.42
TAPER RATIO	73
SWEEPBACK (25% ELEMENT)	45°
AIRFOIL	NACA 64A 002

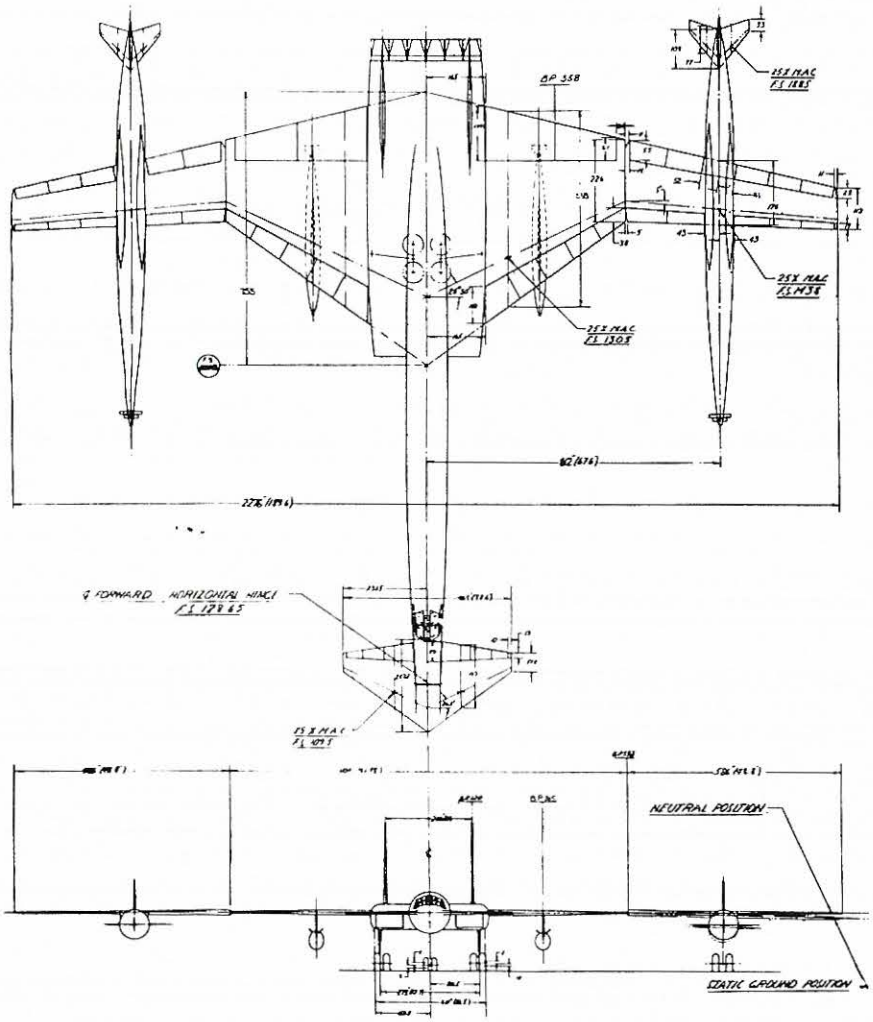

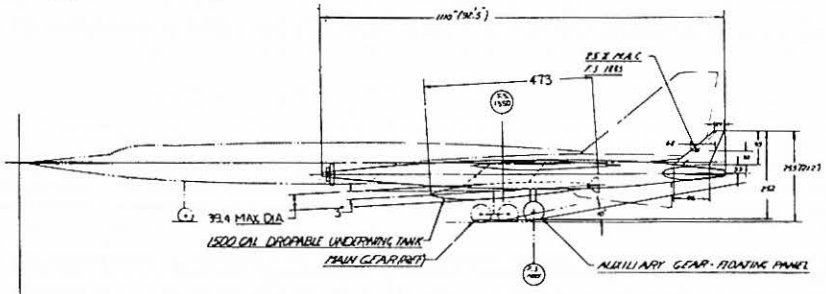

SIDE PROFILE-FLOATING PANEL & TANK IN NEUTRAL POSITION

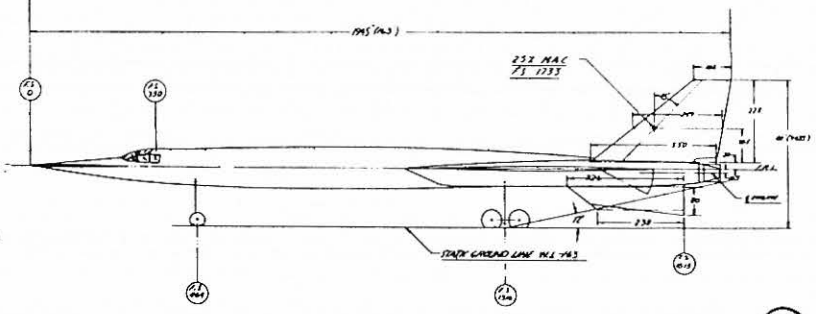

SIZE COMPARISON WITH B-36
SAC BOMBER - SYSTEM 110A-D

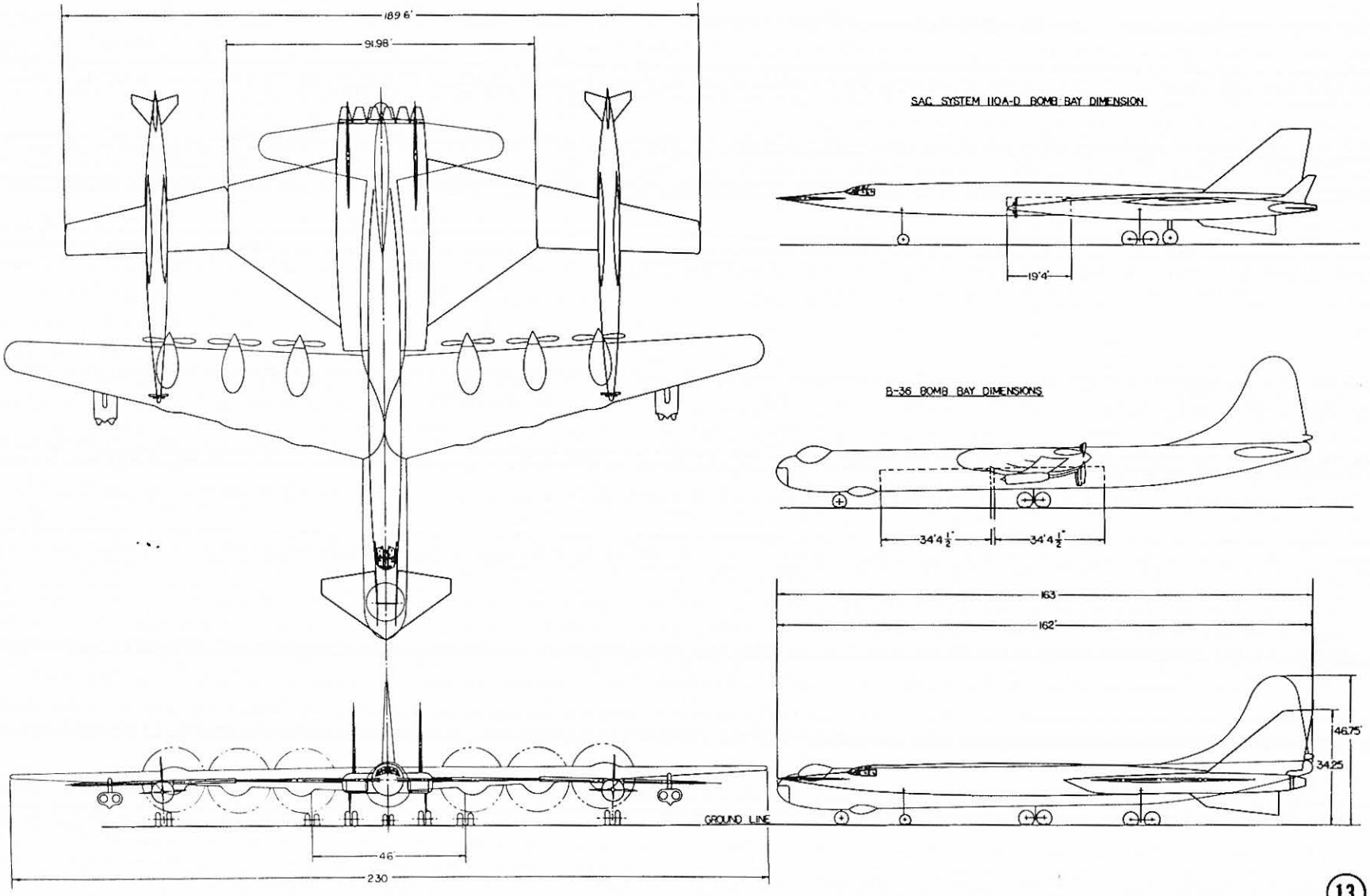

TSP65-3927

SIZE COMPARISON WITH B-52
SAC BOMBER-SYSTEM 110A-D

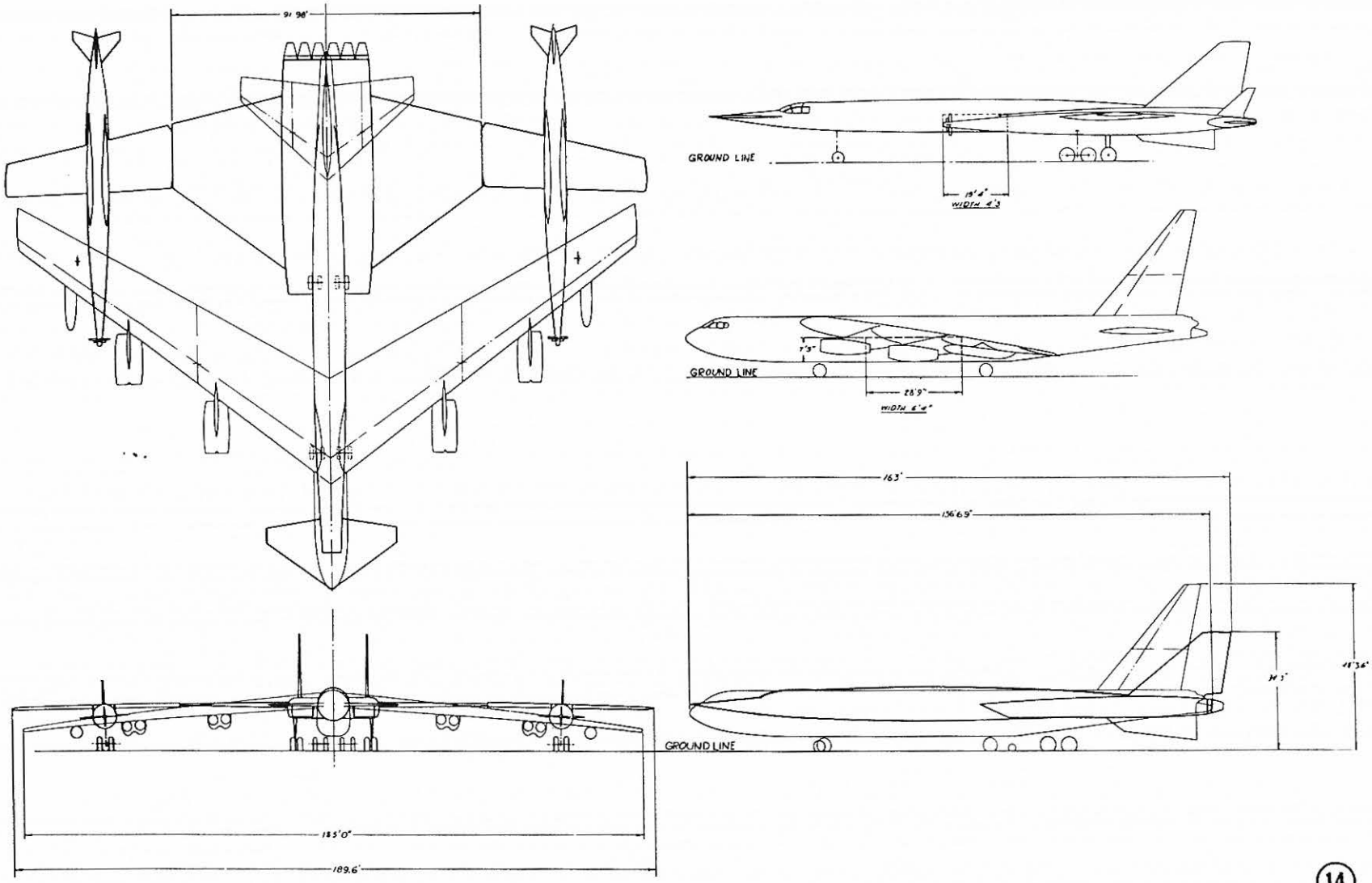

TSP65-3936

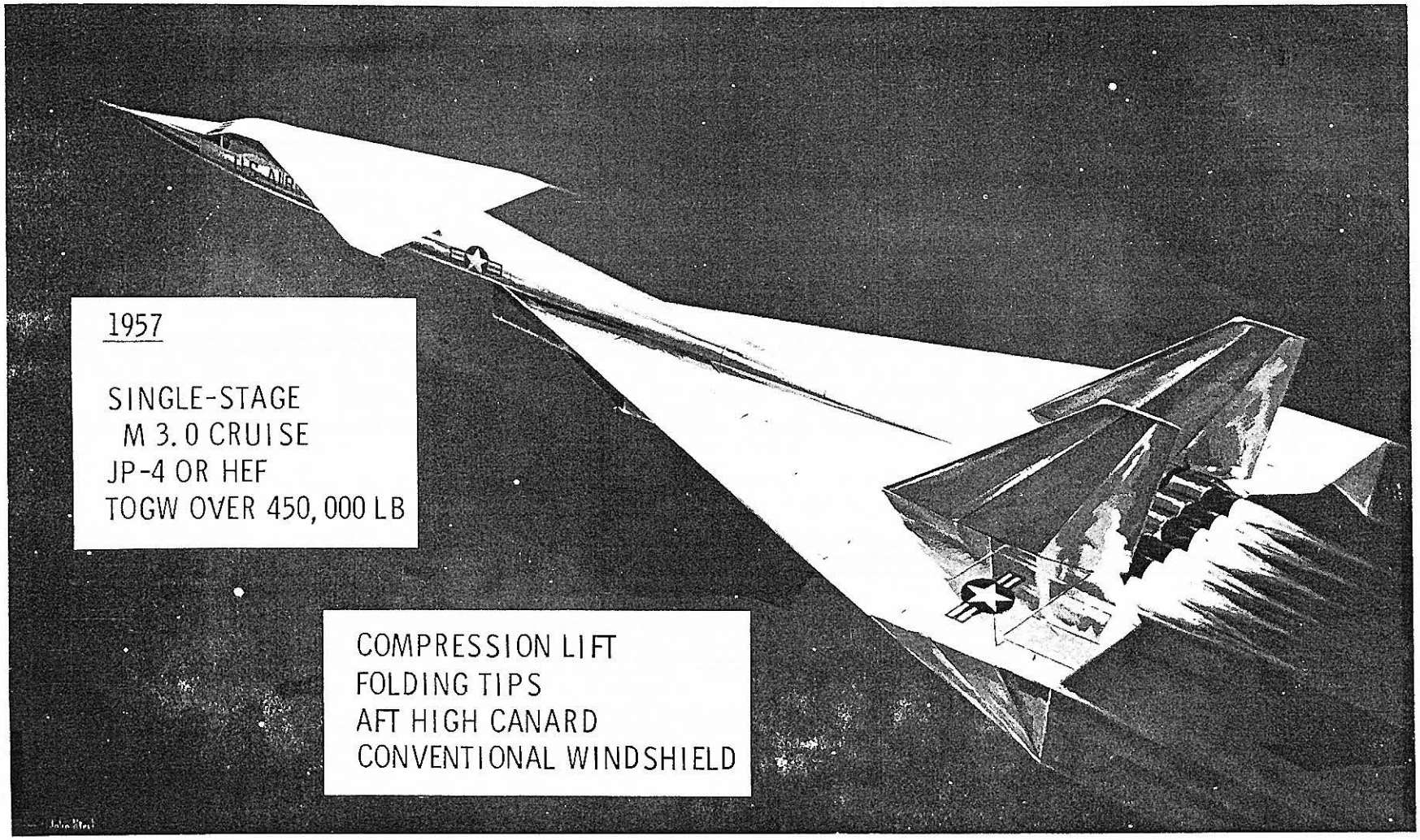
1957
SINGLE-STAGE
M 3.0 CRUISE
JP-4 OR HEF
TOGW OVER 450,000 LB
COMPRESSION LIFT
FOLDING TIPS
AFT HIGH CANARD
CONVENTIONAL WINDSHIELD

FSS-11-4204 A

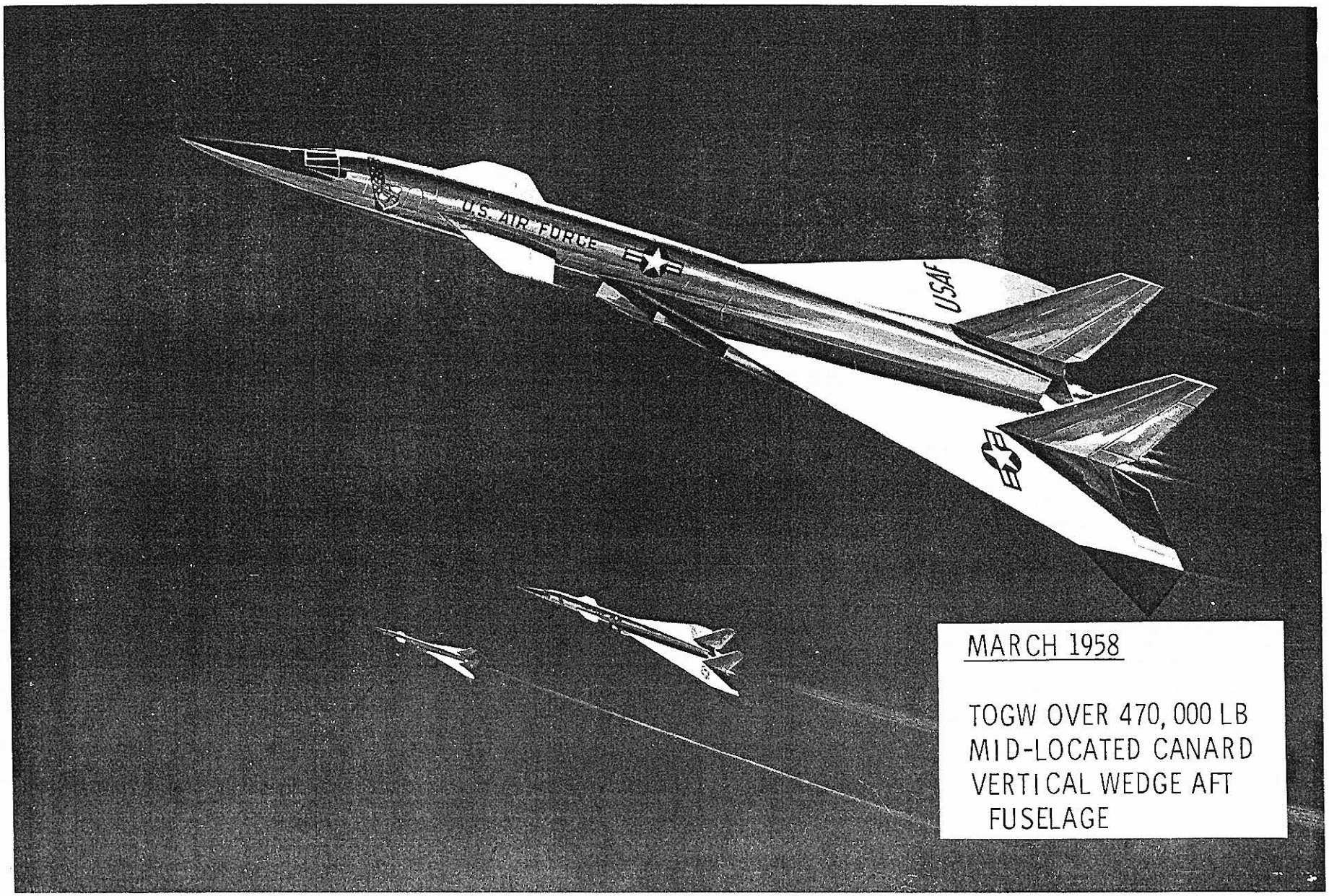

MARCH 1958

TOGW OVER 470,000 LB
MID-LOCATED CANARD
VERTICAL WEDGE AFT
FUSELAGE

FSS-11-5731A

FLIGHT VIEW

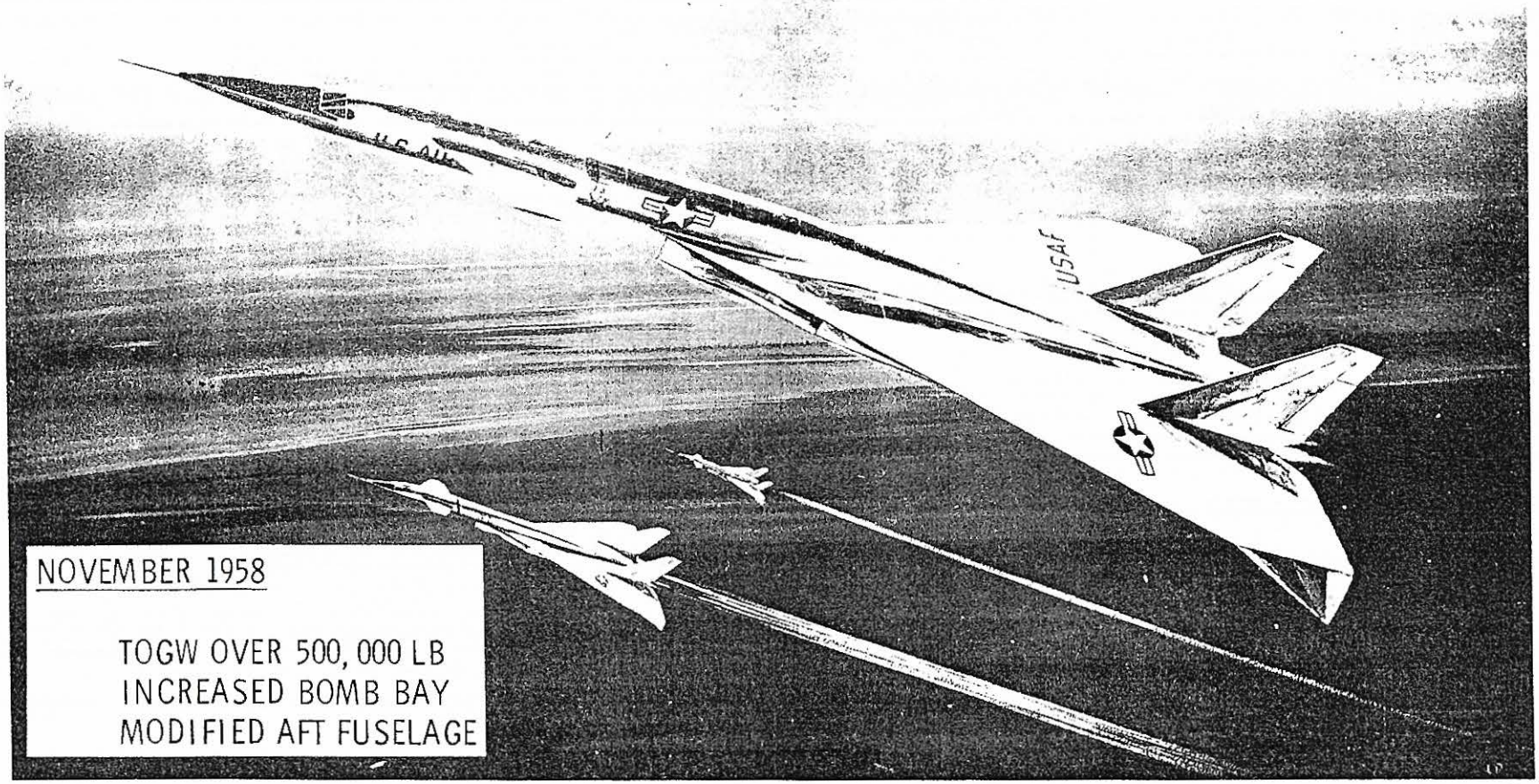

NOVEMBER 1958

TOGW OVER 500,000 LB
INCREASED BOMB BAY
MODIFIED AFT FUSELAGE

WSS-11-7446A

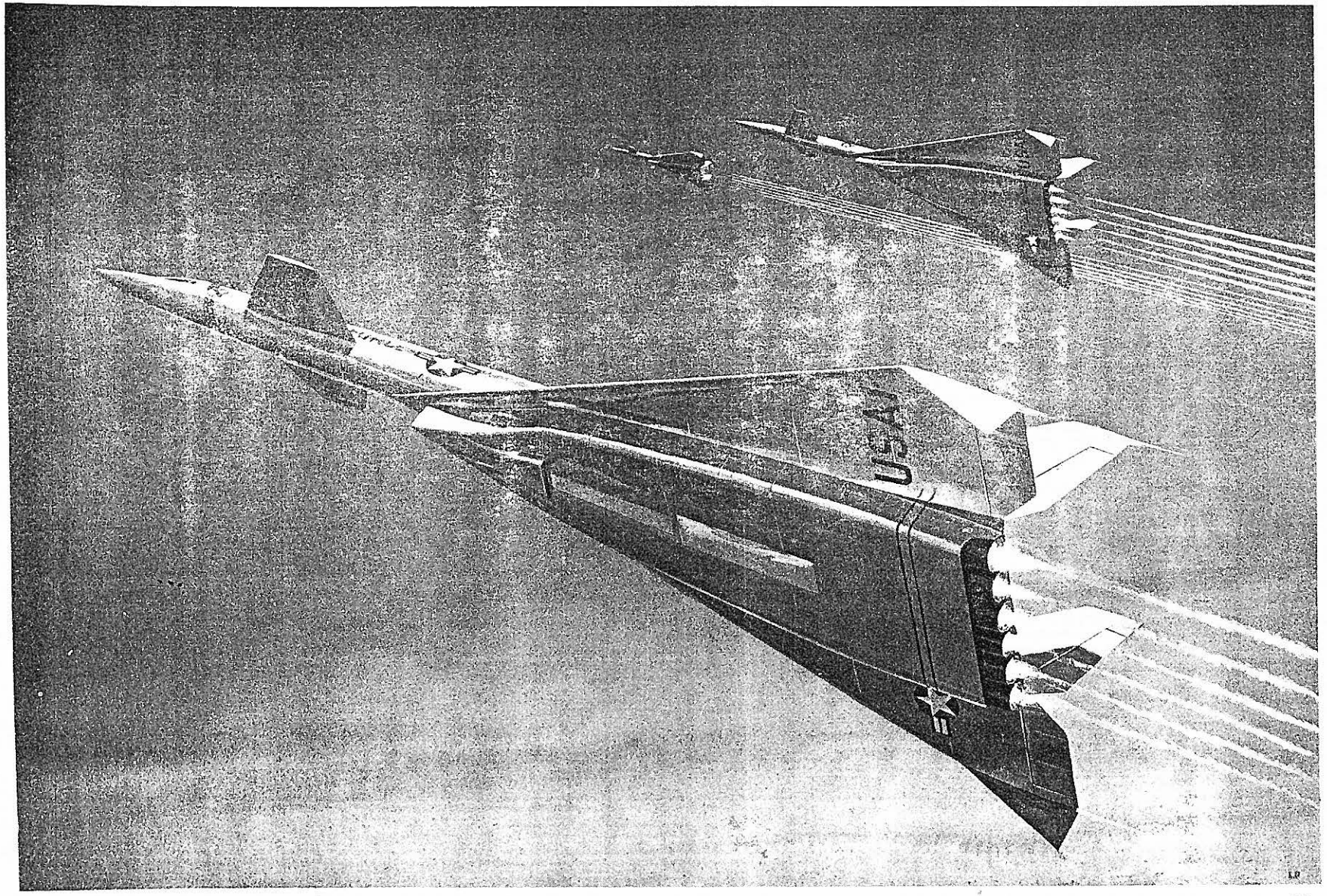

FSS-11-5730

GENERAL ARRANGEMENT - 3 VIEW - B-70 SAC BOMBER - W.S. 110A

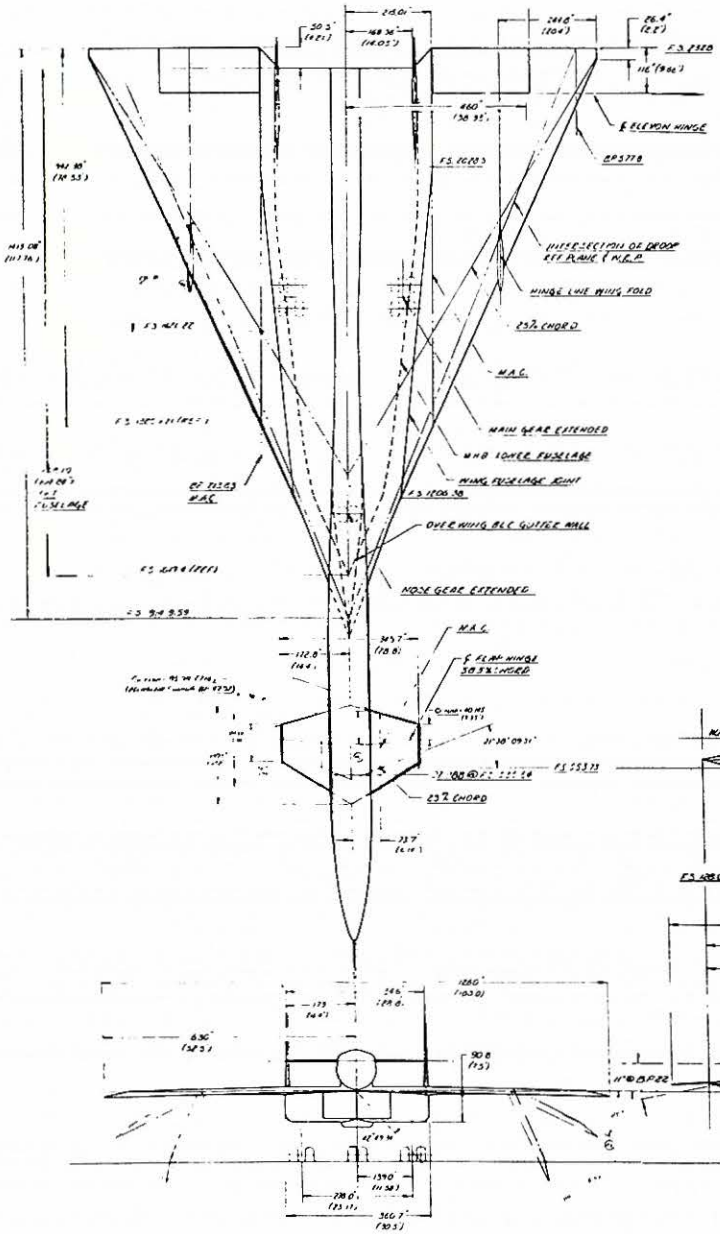

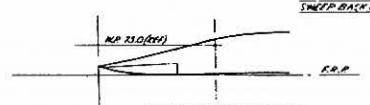

VIEW SHOWING RAMP UP

WING

AREA	6291.8 SQ.FT.
ASPECT RATIO	1.731
TAPER RATIO	0.019
SWEEP BACK (25% ELEMENT)	50.0°
AIRFOIL STRAIGHT TAPER LEADING EDGE TO 30%, CONSTANT THICKNESS TO 70% (MODIFIED), STRAIGHT TAPER 70% (MODIFIED) TO TRAILING EDGE. LEADING EDGE (DROOP) 3° INBOARD OF WING FOLD (4° OUTBOARD OF WING FOLD	
INCIDENCE	0°
DIHEDRAL	0°
ROOT CHORD	110.0 FT.
TIP CHORD	22 FT.
M.A.C. LENGTH	94.4 IN.
¼ - .023 @ BP 146 TO - .025 @ BP 460	
30-70 FLEX MODIFIED	
SWEEP BACK OF L.E. IN CHORD PLANE	65.6°

ELEVON

TOTAL ELEVON AREA	390.7 SQ.FT.
SINGLE ELEVON (PER SIDE)	195.4 SQ.FT.
ELEVON DEFLECTION	30° UP 30° DOWN

HORIZONTAL STABILIZER

AREA (TOTAL)	415.18 SQ.FT.
ASPECT RATIO (TOTAL)	1.939
TAPER RATIO (TOTAL)	0.301
ROOT CHORD (TOTAL)	20.8 FT.
TIP CHORD	6.04 FT.
SWEEP BACK (25% ELEMENT)	21.65°
AIRFOIL	39-66 MODIFIED
FLAP AREA (TOTAL)	83.92 SQ.FT.
FLAP DEFLECTION	0 TO 70°
¼ - .023 @ BP 50.5 TO .025 @ TIP	
M.A.C. LENGTH (TOTAL)	184.3434 IN.
DEFLECTION	20°-0°
SWEEP BACK OF L.E. IN CHORD PLANE	40.5°

VERTICAL STABILIZER

TOTAL VERTICAL AREA	467.9 SQ.FT.
SINGLE VERTICAL AREA	233.96 SQ.FT.
ASPECT RATIO	1.000
TAPER RATIO	.300
SWEEP BACK (25% ELEMENT)	45°
ROOT CHORD	29.0 FT.
TIP CHORD	6.9 FT.
AIRFOIL	30-70 MOD. MODIFIED
¼ - .023 @ ROOT & .025 @ TIP	
M.A.C. LENGTH	197.4 IN.
RUDDER AREA (TOTAL)	92.2 SQ.FT.
RUDDER DEFLECTION (GEAR DOWN)	± 12°
TOTAL VERTICAL AREA (INCL. FOLDING TIPS)	885.1 SQ.FT.
SWEEP BACK OF L.E. IN CHORD PLANE	51°

FOLDING TIP VENTRALS

AREA	302.9 SQ.FT.
ASPECT RATIO	.828
TAPER RATIO	.049
¼ - .0226 @ BP 395.7 to .025 @ BP 460 to BP 633	
SWEEP BACK OF L.E. IN CHORD PLANE	65.6°

ALIGHTING GEAR

MAIN GEAR - TANDEM DUAL
40 x 12.5 - 18 ENP TYPE IV
NOSE GEAR - DUAL
40 x 12.5 - 18 ENP TYPE IV

DEFLECTION

MAIN GEAR TOTAL STROKE	13.8 IN.
STATIC TO COMPRESSED	2.8 IN.
NOSE GEAR TOTAL STROKE	14.4 IN.
STATIC TO COMPRESSED	3 IN.

VISION

OVER THE NOSE	
RAMP UP	-2° 30'
RAMP DOWN	-11° @ BP 122

ENGINES

SIX (6) J93-GE-3 ENGINES

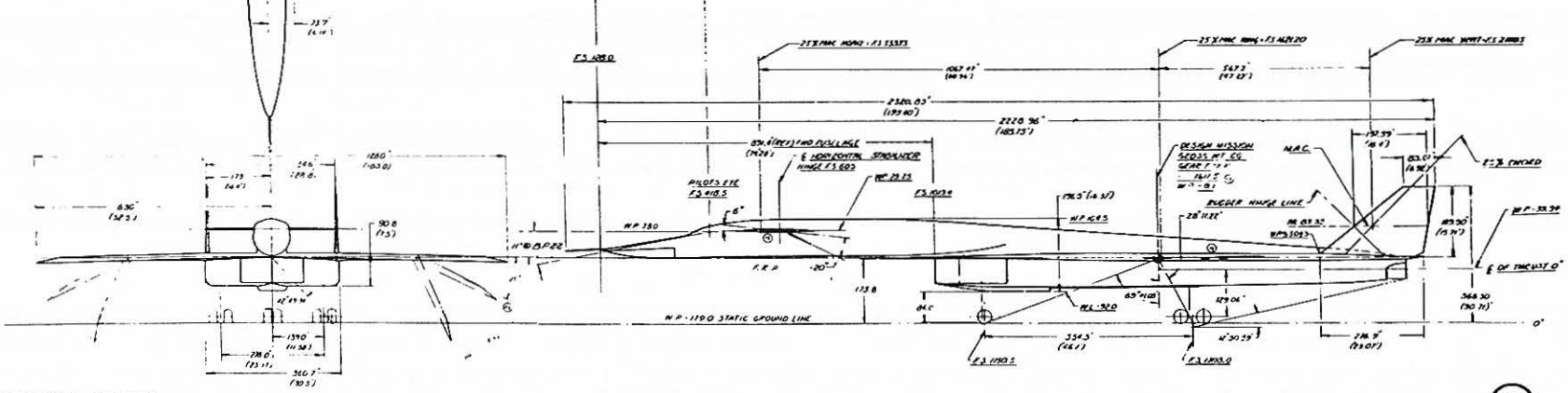

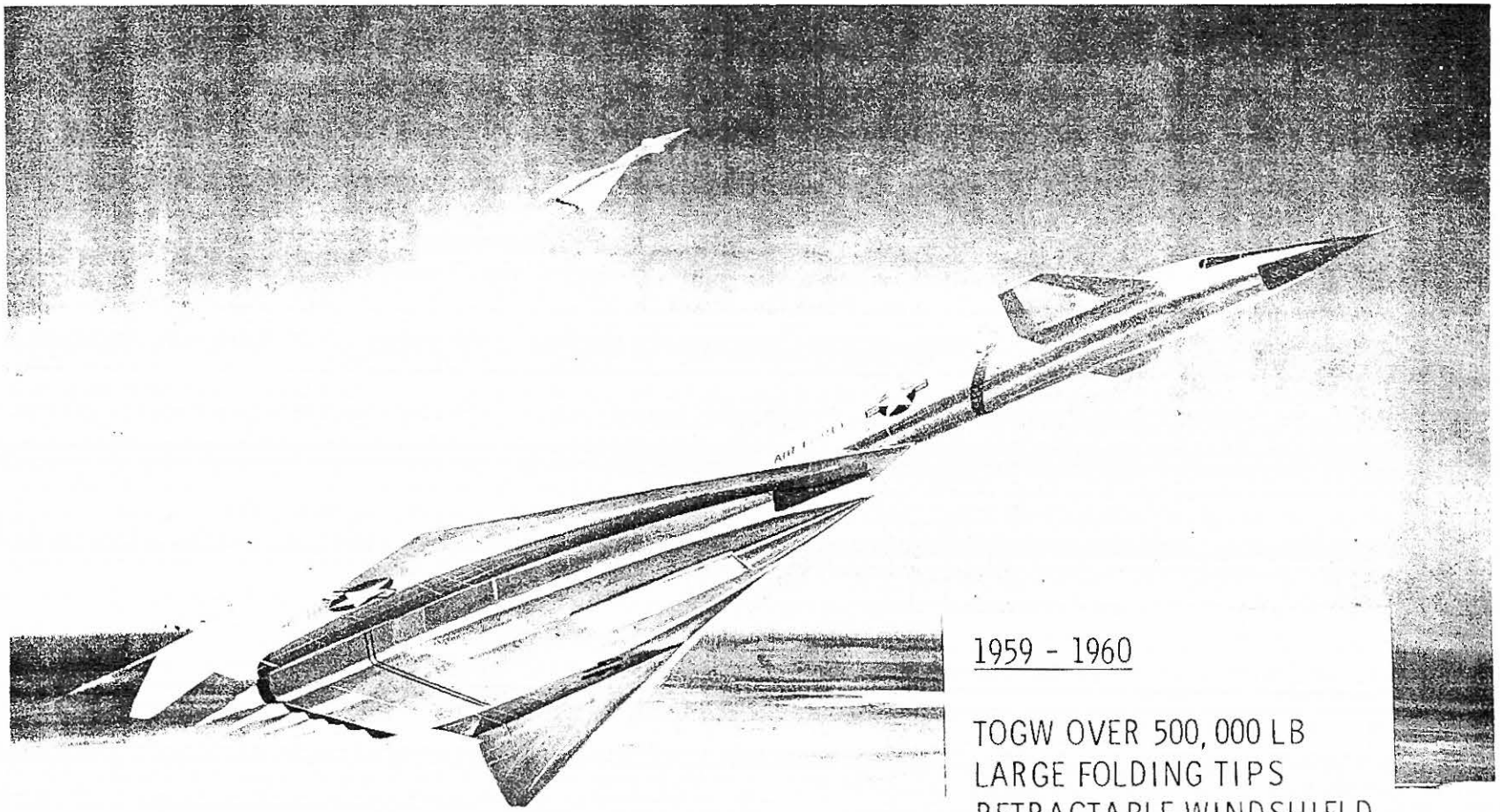

1959 - 1960

TOGW OVER 500,000 LB
LARGE FOLDING TIPS
RETRACTABLE WINDSHIELD
RAMP

22-0620C

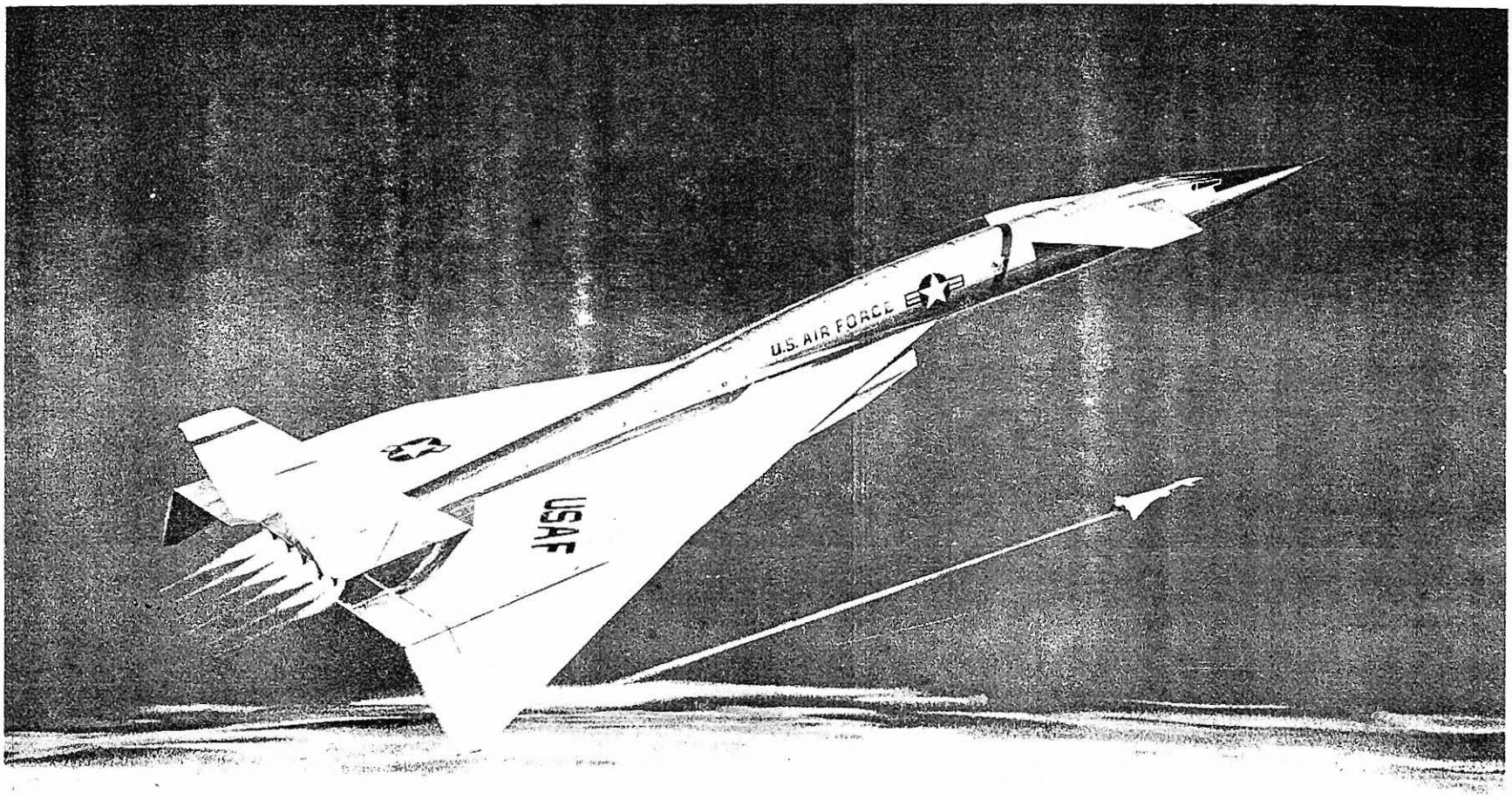

22-0621 D

GENERAL ARRANGEMENT
B-70

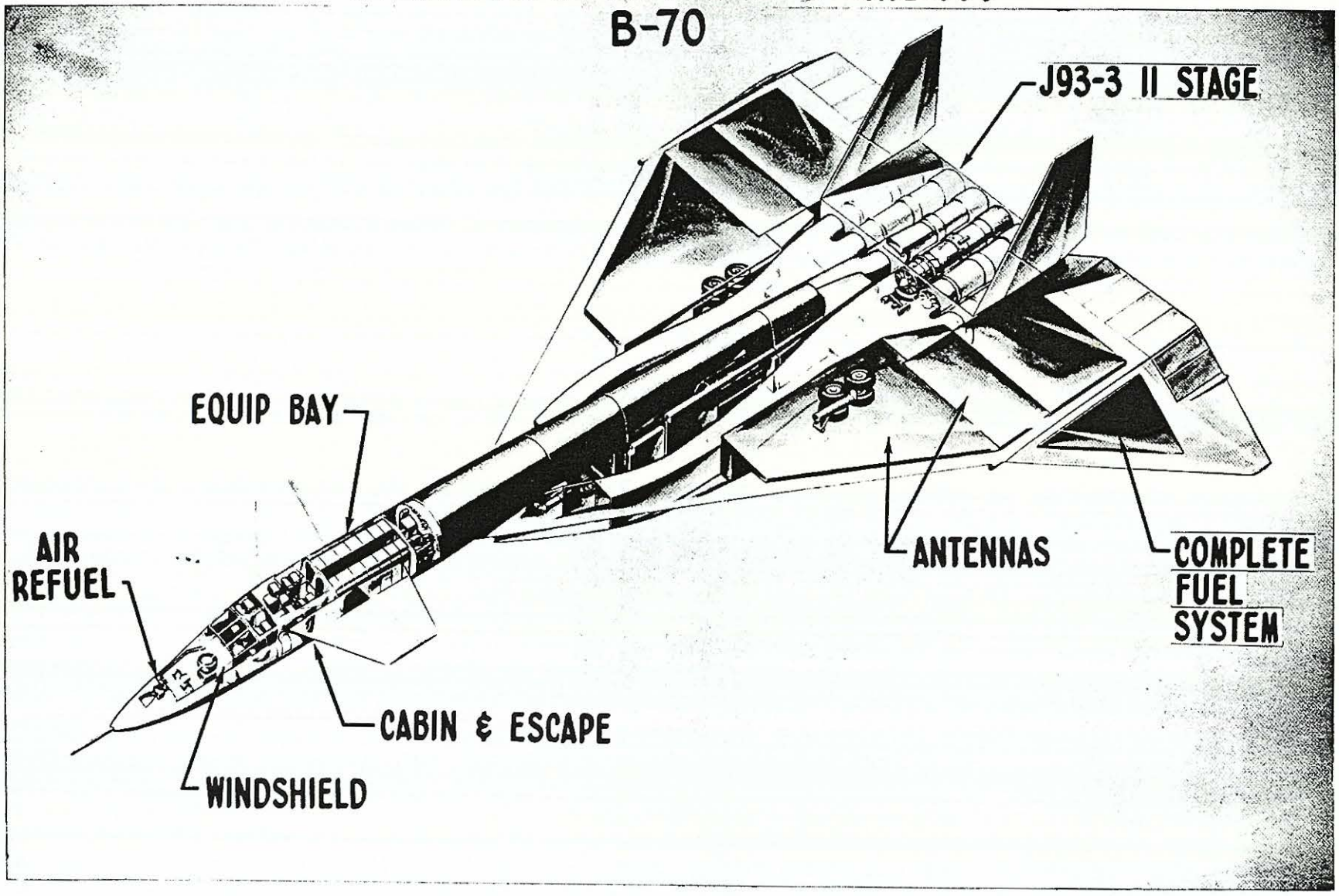

WSS-22-8414 E

1961 TO PRESENT

TOGW OVER 500,000 LB
MODIFIED CANARD
CAMBERED WING
INCREASED TIP FOLD ANGLE
WING DIHEDRAL (NO. 2)

TSP65-3931