DISTRIBUTION STATEMENT A - Approved for public release; distribution is unlimited.
412TW-PA-22168

T-7A Distributed Test: Remote Testing of Prototype Aircraft

Rebecca Aronoff, United States Air Force Test Center

European Test and Telemetry Conference

10 May 2022

Background: T-7A Aircraft

- T-7A Advanced Pilot Trainer
- Jet trainer for US Air Force
- T-38 replacement
- Single F-404 engine
- Tandem cockpit
- Digital flight control system

Background: Split Test Teams

- 2 contractor prototype aircraft
- 5 Air Force test aircraft
- Combined test team
  - Contractor in St. Louis, Missouri
  - Air Force at Edwards AFB, California
- Phased test approach

→ Two simultaneous testing locations

Idea: Distributed Test Operations (DTO)

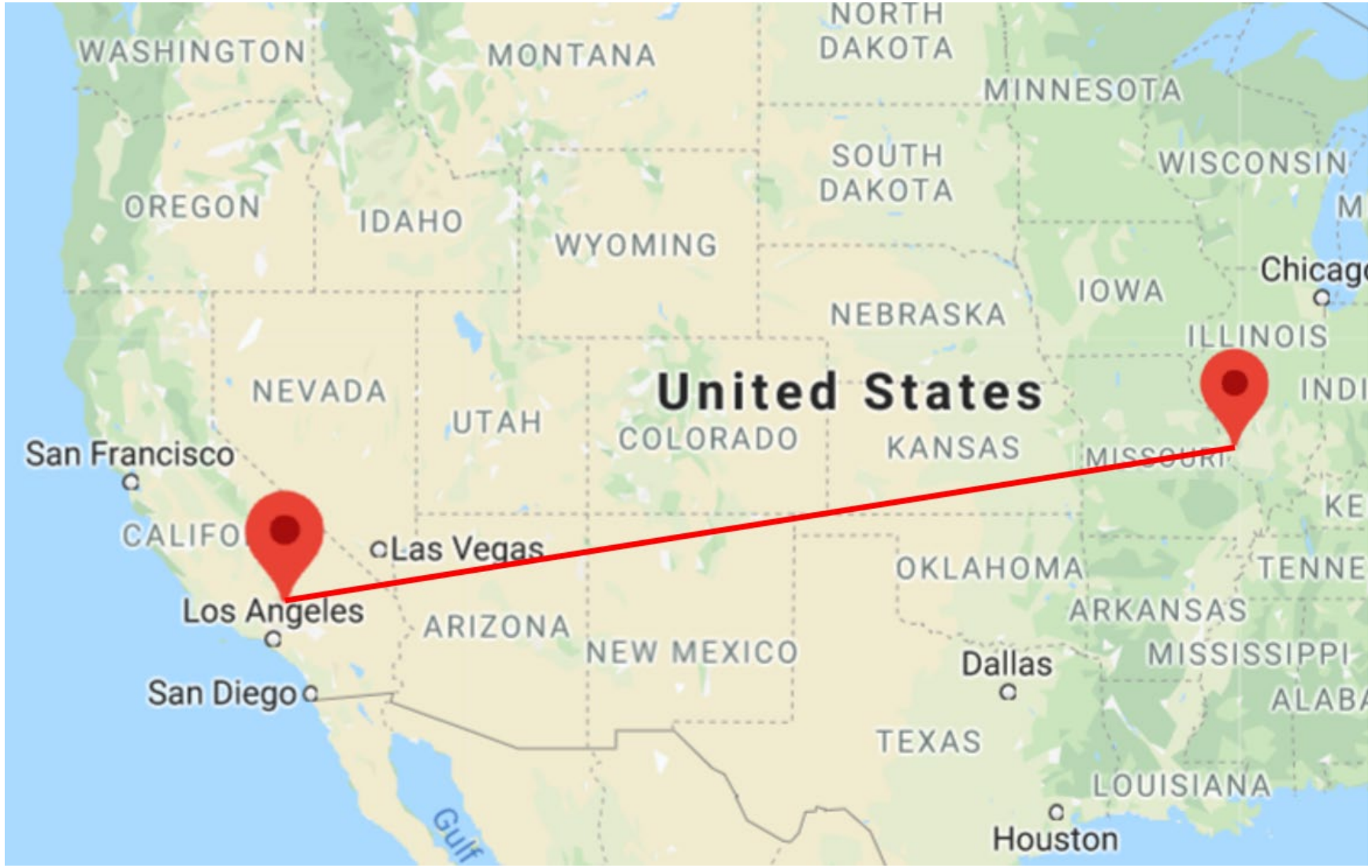

Idea: Distributed Test Operations (DTO)

DTO Equipment and Setup

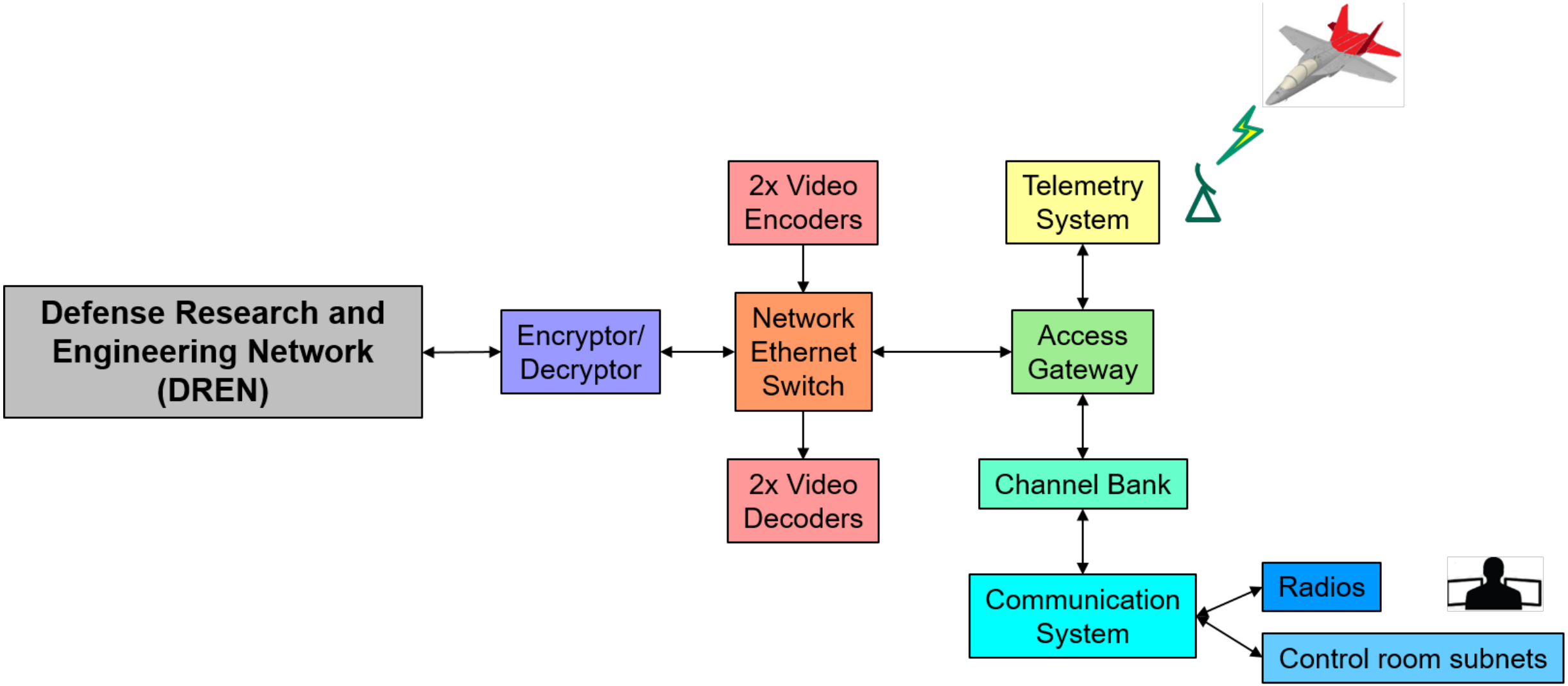

DTO Capabilities

- Aircraft telemetered data
- “Hot mic” audio from pilots
- Two-way communication to other control room
  - Room net with all participants
  - Up to 24 subnets
- Radio communication to/from aircraft
- Live video feeds from ground stations

DTO Capabilities

- **Bandwidth of 100 Mbps**
- **Example T-7 DTO (one aircraft):**
  - **Primary telemetry stream: 100 Mbps**
  - **Backup telemetry stream: 100 Mbps**
  - **Communications: 1.5 Mbps**
  - **Live video: 1 Mbps**
  - **Optional second live video: 1 Mbps**
  - **Total: 13.5 Mbps**
- **Example T-7 DTO (two aircraft):**
  - **Total: 27 Mbps**

DTO: Establishment

- Data playback test
- First DTO on 30 April 2020
- 56 test flights observed to date
  - Primary control room in St. Louis

- Risk reduction for DTO based out of Edwards AFB
  - Data playback test
  - Simultaneous DTO at both locations

DTO: Latency

- **Time difference**
  - Aircraft sent data
  - Control room received data
- **Displayed on data screens**
  - Local to each control room
  - Across DREN: 40-80 ms
  - Total at remote site: 120-140 ms
  - ~300 ms with telemetry repeater
- **Threshold in safety plans**
  - 500 ms for current testing
  - Pause testing if exceedance

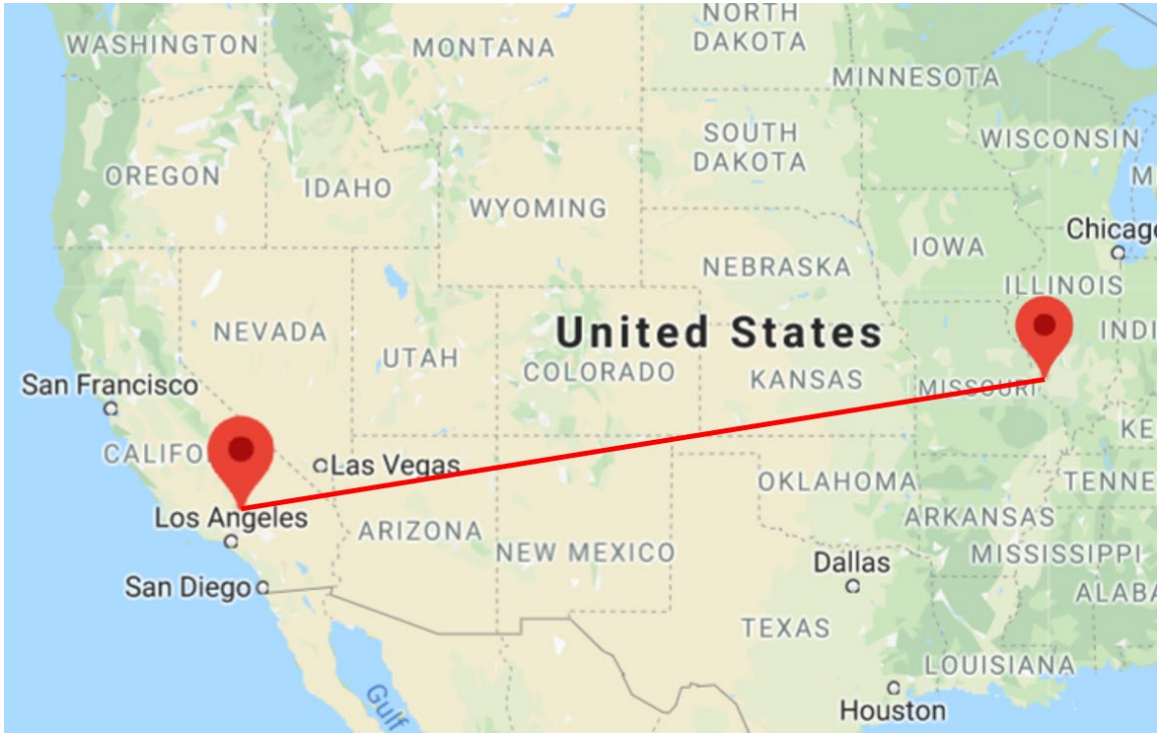

Concept of Operations (CONOPS)

- Roles & responsibilities
- Crew rest & duty day
- Resource scheduling
- File transfer procedures
- Flight test briefings
- Control room conduct
  - Multiple rooms, one voice
  - Subnets
  - Communication checks
  - Global “knock it off” capability

Concept of Operations (CONOPS)

- Training
- Buildup approach
  - Observation only
  - Mission-critical data
  - Safety-of-test
- Failure procedures
  - Loss of data
  - Loss of communication
- Mishap procedures

Challenges Encountered & Lessons Learned

- Data dropouts
- Radio interference
- No shared data network
- File naming convention
- Monitor ratios
- Scheduling differences
- Increased resource demand
- Two time zones
- Proactive communication
- Contractual limitations

Future Growth

- Remote safety-of-flight calls
- DTO as standard operations
  - St. Louis to Edwards AFB
  - Edwards AFB to St. Louis
  - Both locations simultaneously
  - Fully-remote test conduct
- Simulator DTO connection
  - Flight control law development
  - Maneuver development
  - Mission rehearsal
- Other test programs

Benefits & Conclusions

- Development of technological capability
- Aligned organizations
- Maximized participation with reduced travel burden
  - Quality of life
  - Increased ability to participate
- Air Force involvement in contractor test
- Proven capability for future tests

Questions?