OPTIMIZING ANTENNA PLACEMENT USING MODELING AND SIMULATION

Frank Cruz

U.S. Air Force

Applied Spectrum Technology Research Office (ASTRO)

Edwards AFB CA 93524

Frank.cruz.9@us.af.mil

ABSTRACT

This report examines how modeling and simulation (M&S) improves the initial design phase optimizing telemetry antenna placement. This multiphysics software is used to create antenna modeling, placement, and radiation pattern. Ultimately, the software facilitated the trade-off analysis between three predetermined antenna placement locations. In order to demonstrate the benefits of M&S, three distinct antenna positions analyzed optimal placement with a focus given to ground plane. The goal of the simulations was to optimize radiation pattern uniformity coupled with the best usable beam angle. The result of this M&S work identified an optimized location for antenna placement resulting in a pod modification to support the new location with low cost and timesaving.

INTRODUCTION

The 812th Airborne Instrumentation Test Squadron (AITS) presented a need to the Applied Spectrum Technology Research Office (ASTRO) to optimize antenna placement on a Reconfigurable Airborne Sensor, Communication and Laser (RASCAL) pod. Currently, the Rascal pod analyzed has an antenna cluster configuration, Figure 1. The current antenna cluster configuration aids in pattern distortion due to the cluster and complex ground plane geometry. For upcoming testing, the antenna cluster will be removed and only one antenna needed. Due to M&S results, the complex ground plane geometry of the back portion of the pod was determined to be the worst-case placement. A recommendation to replace the current window, Figure 2, with a flat aluminum panel to optimize radiation pattern performance was provided. For the purposes of testing an Airborne Mobile Telemetry (AMT) system, the pod will be placed centerline on the belly of a T-38 aircraft. Figure 3 shows the orientation and placement of the pod on the T-38.

Modeling and simulation is an excellent approach due to the rapid nature of computer-based evaluations and the lack of access to an anechoic chamber equipped with a turntable capable of supporting the weight of a RASCAL pod. The following topics addressed in this paper are in order below:

- Creating A Reference Antenna
- Comparing Antenna Locations
- Simulation Setup
- Antenna Pattern Simulation Results
- Front Location Evaluation
- Middle Location Evaluation
- Aft Location Evaluation

Figure 1 - Existing Rascal Pod Antenna Cluster Aft of Pod

Figure 2 - Rascal Pod Window

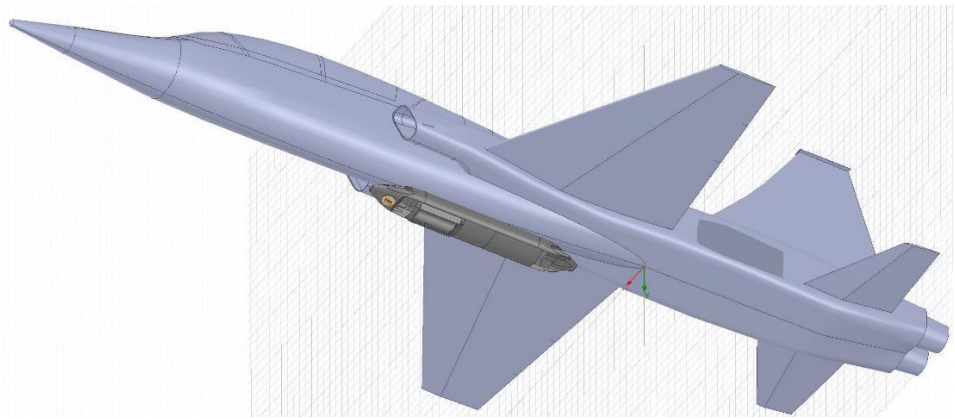

Figure 3 - Rascal Pod on T-38

The conclusion of the paper will touch on future utilization of model-based simulations in overall flight test.

ANTENNA MODEL BASED SIMULATION

Creating A Reference Antenna

A predetermined requirement provided by the program of one general-purpose monopole blade antenna with an operating frequency of 4500-5000MHz was established. This antenna will allow operation in lower C-band telemetry band of 4400-4940MHz. Once the blade antenna was identified, ASTRO was able to use an x-ray performed and provided by the Air Force Research Lab (AFRL) at Wright Patterson Air Force Base in Ohio to establish the built model's physical characteristics used in the actual construct of the antenna. Physical measurements of the antenna were taken in software provided by AFRL. Figures 3 and 4 show the antenna construct from an x- ray and computer aided design (CAD) model view respectively. The antenna element length was built at 4.75 GHz (same as the x-rayed measured length) due to typical best antenna performance at the center of the operating band. An antenna radiating element and cylindrical ring with a polarization of 45°, when referenced to a flat ground plane under the antenna-mounting bracket, can be seen. The 45° polarization helps mitigate deep pattern notching and improves/extends the beamwidth of the antenna when observing the antenna from a front view.

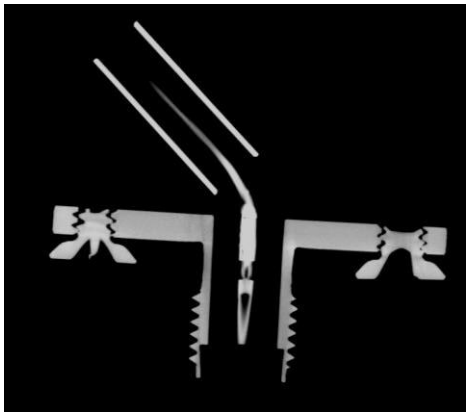

Figure 4 - X-ray Image of Blade Antenna

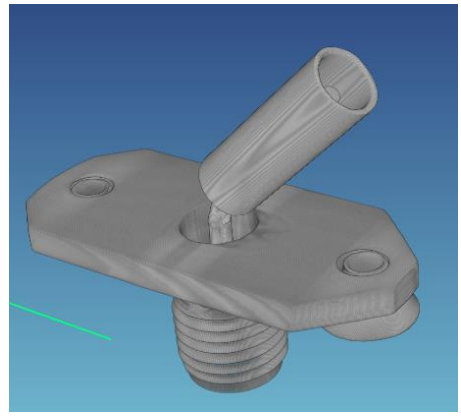

Figure 5 - Model of Blade Antenna

Once the construct of the antenna was established, a model needed to be built and a reference/control antenna pattern created. The reference/control pattern was then compared to measured pattern values obtained from the antenna manufacturer's specifications sheet for verification purposes. Figure 5 shows the antenna constructed in the model. To achieve a pattern comparable to the specification sheet measured values of the blade antenna a simulation setup needed to mimic a real-world test set up typically done in an anechoic chamber. As can be seen in Figure 6 a large circular ground plane made with a perfect electrical conductor (PEC) was constructed. A radiation boundary box with a vacuum boundary condition was required in order match (as closely as possible) the antenna patterns for baselining and controlled environment purposes. As environmental factors increase, for example, the air surrounding ground/airborne altitude and ground plane contour, the simulation can be modified to support environmental needs. Figures 7 and 8 show the comparison of the measured blade antenna to simulated blade antenna. For the purposes of this simulation, the patterns match up well and were good enough to proceed to implementing a blade antenna on a Rascal Pod.

Generally, the largest factor influencing pattern shape of a monopole antenna is ground plane with respect to wavelength. Short wavelength will translate to more distortion when encountering a complex geometry, with distortion meaning deep nulls/notching, more rippling, and asymmetric radiation patterns. Notching is a big driver to make a determination what the optimized placement will be.

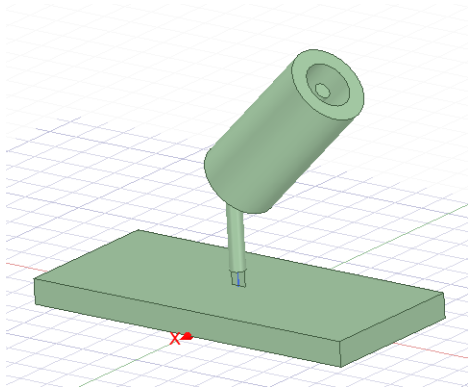

Figure 6 - Model Constructed Blade Antenna

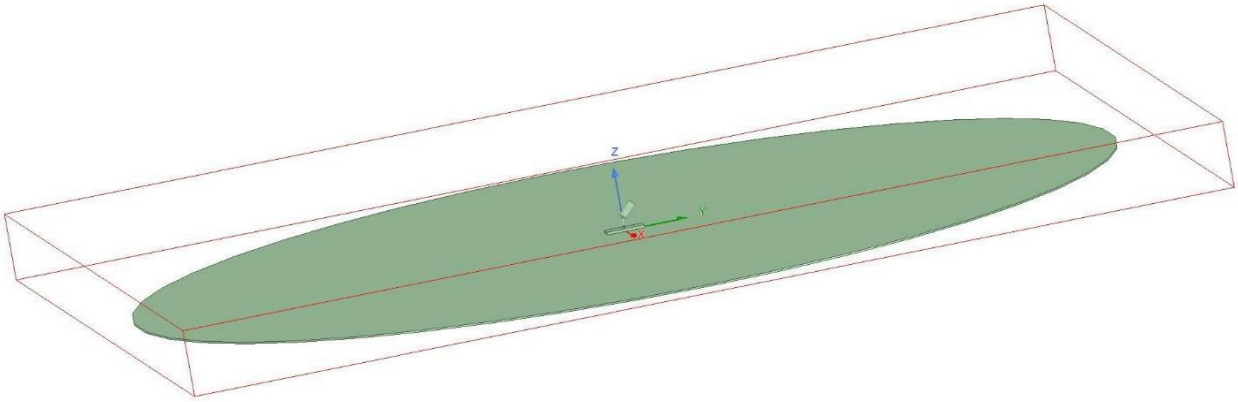

Figure 7 - Antenna Reference Setup

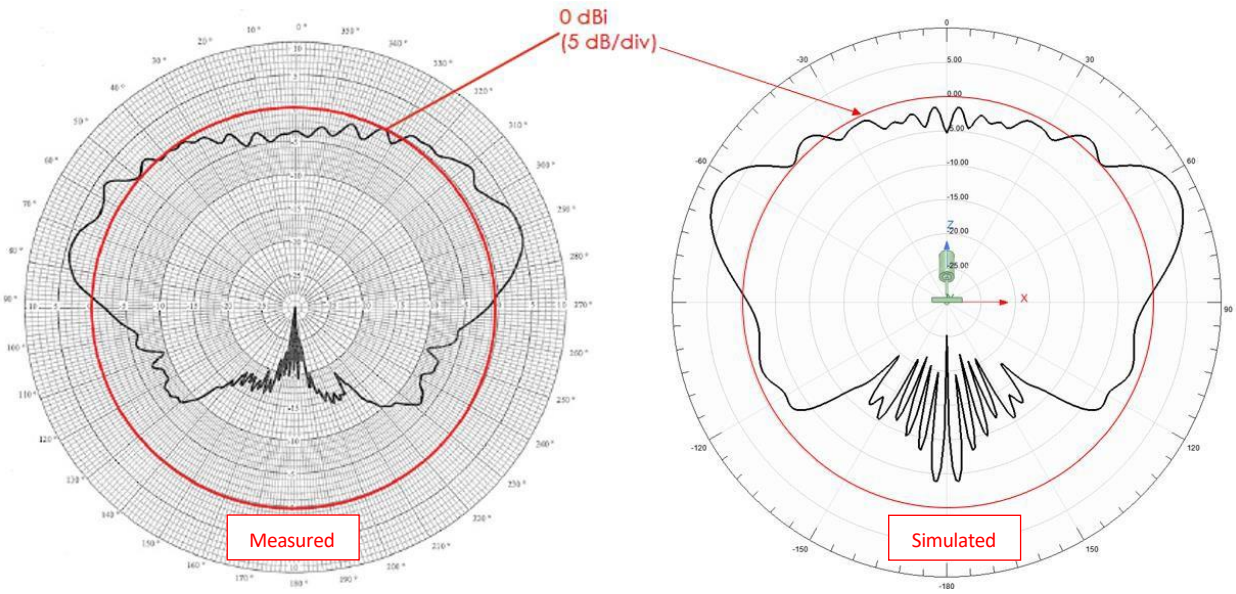

Figure 8 - Antenna Pattern, Elevation Cut

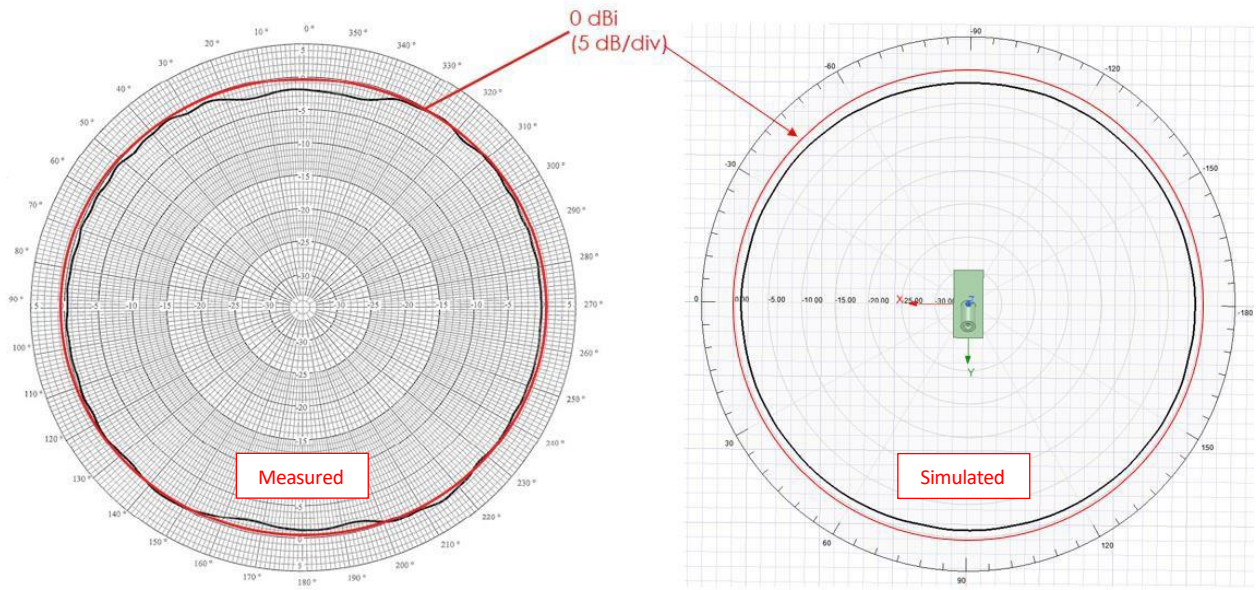

Figure 9 - Antenna Pattern, Azimuth Cut

Comparing Antenna Locations

Three locations on the Rascal Pod were identified for placement; forward; middle; and aft. In Figure 9 it can be seen that the front of the pod has a circular ground plane elevated from the body of the pod causing an edge. Also, the front of the pod rolls off and a flat ground plane is not present. The placement of the antenna was done in the middle of the circular elevated plate. The middle portion of the rascal pod modeled with a flat aluminum panel instead of the current window was used to place a blade antenna in the center. In the aft portion of the pod, which previously housed the blade antenna cluster, a blade antenna was placed in the geometric center. The red circles in Figure 9 show the antenna placements, respectively.

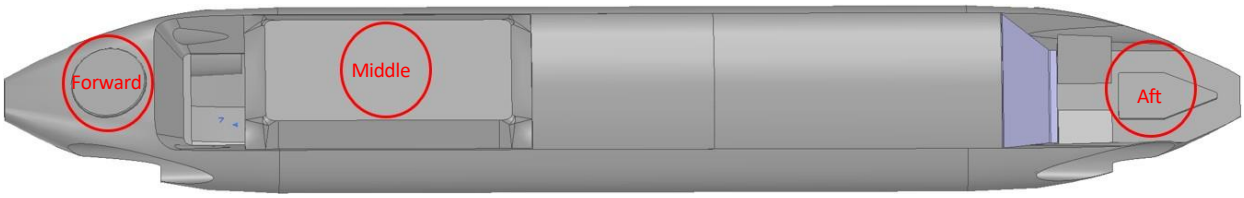

Figure 10 - RASCAL Pod with Simulated Antenna Placements, Bottom Looking Up

Simulation Setup

With baselining complete, a constructed simulation set up to produce a radiation pattern was completed. The antenna locations were then independently simulated and evaluated with the same defined properties:

- Integral equation (IE) solver, Electric Field Integral Equation (EFIE) with boundary conditions specified.

- Pod constructed of all aluminum, a majority of the pod is cast aluminum and detachable parts are aluminum.
- Radiation boundary of vacuum, entire model bounded for controlled environment purposes.
- A solution frequency of 4.75 GHz. Middle of the antenna band and typically the optimal tuning length for a build.
- Entire antenna construct of PEC.

Antenna Pattern Simulation Results

The three metrics chosen for pattern evaluation, notching, uniformity, and beam angle. Notching was evaluated to show gain roll off and dips under 0dB. A red ring at 0dB was chosen to show the points on the pattern that are less than the input power at the antenna port. Uniformity was an evaluation criteria on the basis of overall averaging when performing general link budget calculations. For instance, if a user does not have access to dynamic simulation software the user will need to perform an average of the antenna gain for link analysis or for rough calculations where variable gain is not needed. Last, beam angle was taken into account to evaluate pattern coverage.

The beam angle metric used is from a front point of view perspective, 0°, due to the more uniform nature of this aspect and how typical flight dynamics occur from a ground-to-air or slant angle observation. Imagine taking the 0° cut/plot and spinning 360° around the ground plane axis. This will give a good idea of overall pattern and is why azimuth and elevation cuts are typically used; for non-complex ground planes. For complex geometries as seen on the aft portion of the pod this is where 3D patterns are very useful.

The reader will see the beam angles intersecting at the 0dB points on the front elevation cuts of the pattern. 3D patterns are also presented to give the reader a better visualization of what is occurring in space. When viewing the 3D patterns the reader should notice how deep the ripples are and how some patterns color transitions faster than other patterns.

Front Location Evaluation

Figure 10 shows a side and front view of the pod. The side view significant notching occurs from roughly -85° to -110° resulting in 25° of notching space (See Figure 10). The front view shows consistent and smooth pattern with a 0dB beam angle of roughly 210°. The 3D pattern in Figure 11 shows deep notches on the top of the pattern and little rippling around the pattern (azimuth view point).

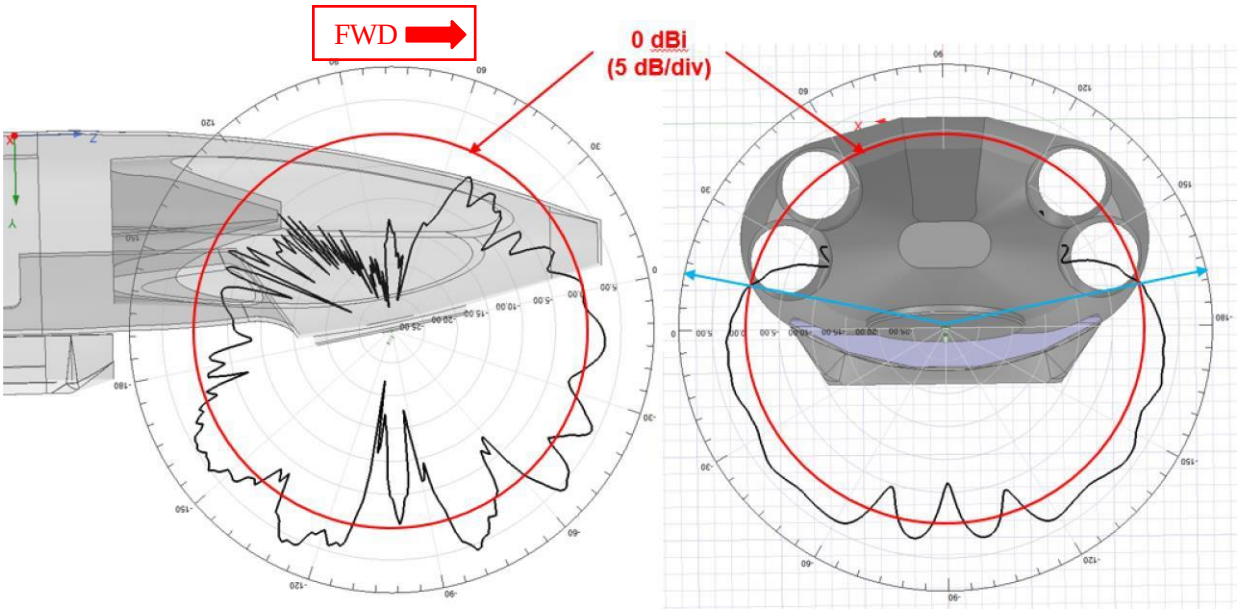

Figure 11 - Side and Front Pattern View, Front Pod Section

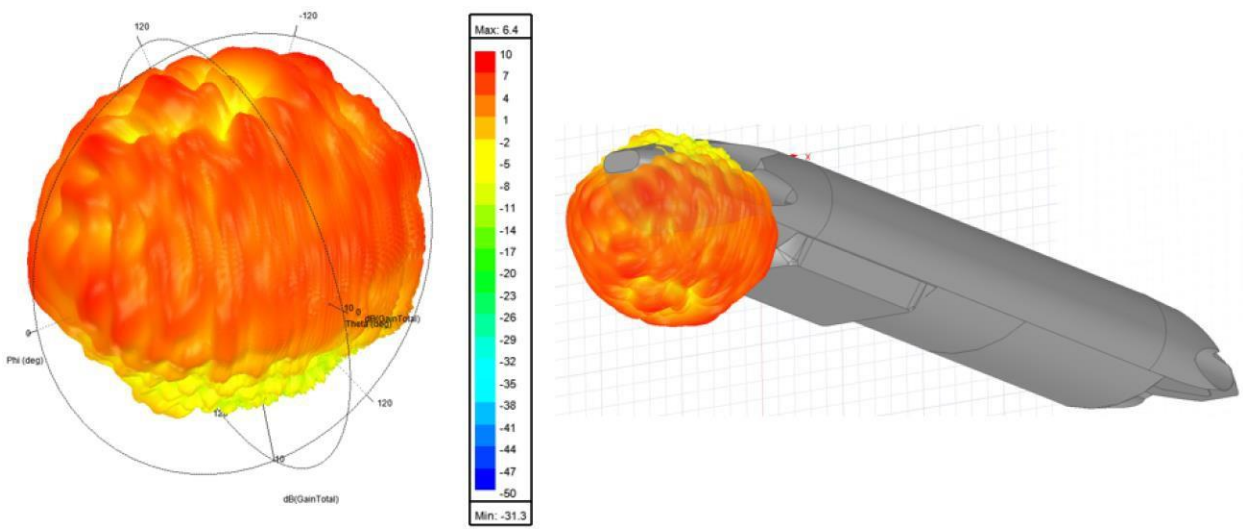

Figure 12 - 3D Pattern, Front Pod Section

Middle Location Evaluation

Figure 12 shows a side and front view of the pod as above. Observing the side view there is no significant notching but an overall power degradation from roughly -155° to 145° resulting in 60° of pattern below 0dB. The front view shows consistent and smooth pattern with a 0dB beam angle of roughly 175°. The 3D pattern in Figure 13 shows consistent rippling on the top of the pattern and uniformed/consistent rippling around the pattern (azimuth view point). There are no sharp color transitions indicating fast roll off null points.

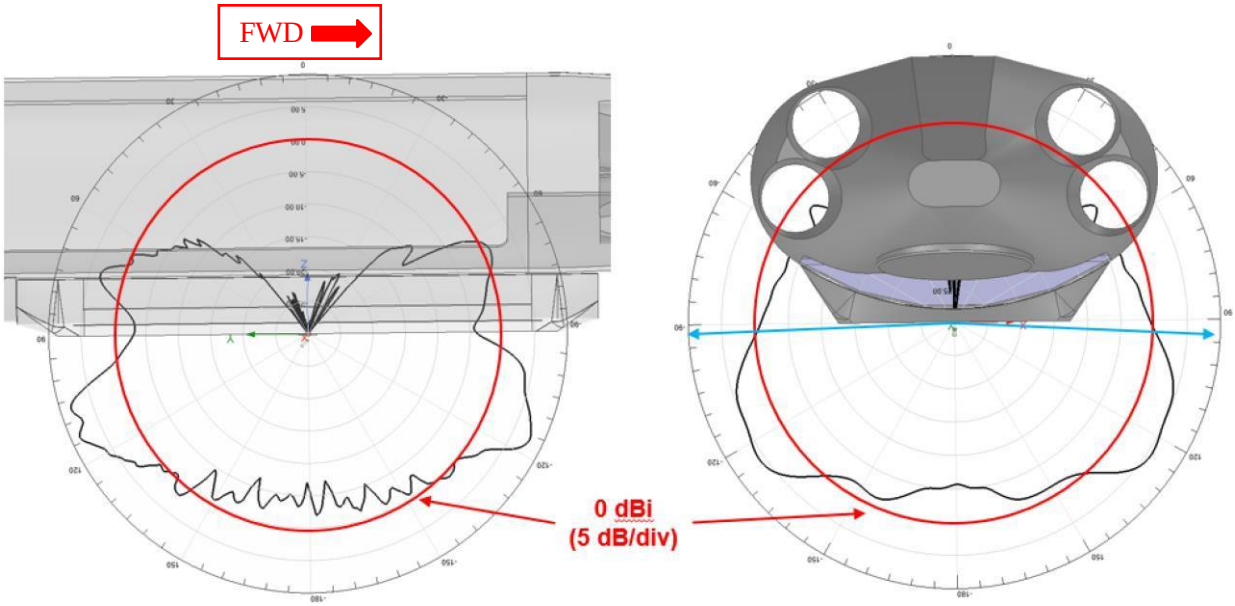

Figure 13 - Side and Front Pattern View, Middle Pod Section

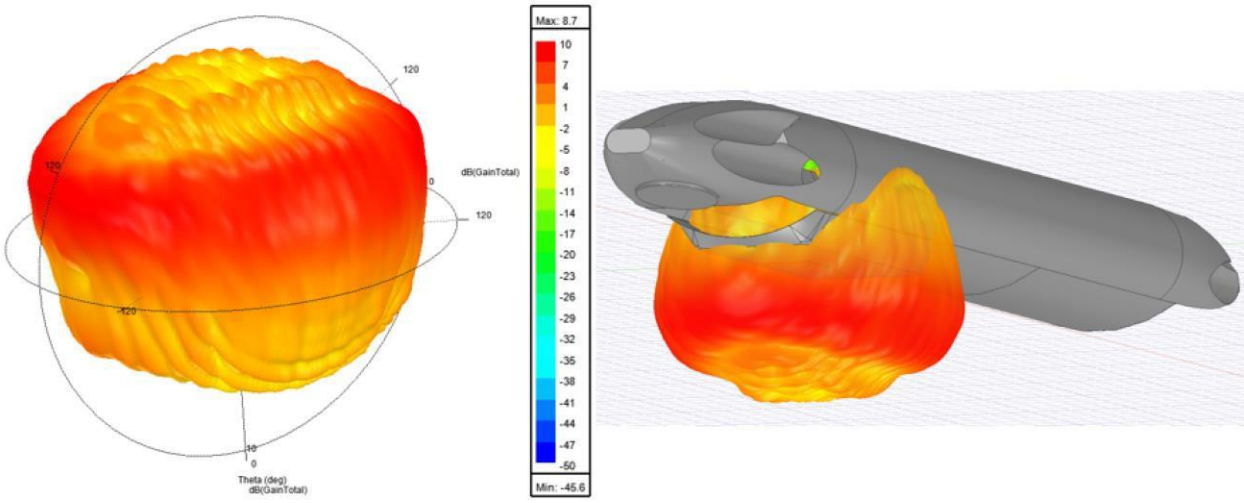

Figure 14 - 3D Pattern, Middle Pod Section

Aft Location Evaluation

Figure 14 shows a side and front view of the pod's rear antenna placement. The side view shows there is significant notching and rippling occurring. The front view also shows significant notching and a 0 dB beam angle of roughly 20° and 15° at different points. The 3D pattern in Figure 15 shows significant rippling on all portions of the pattern with sharp color transitions.

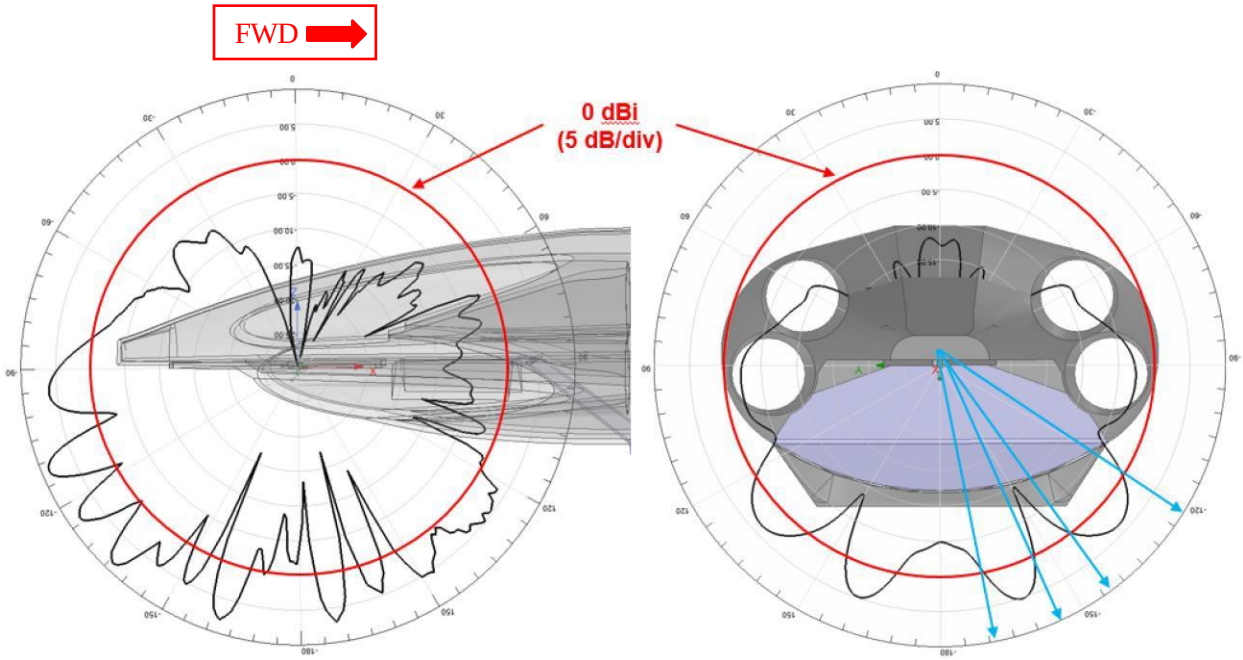

Figure 14 Side and Front Pattern View – Rear Pod Section

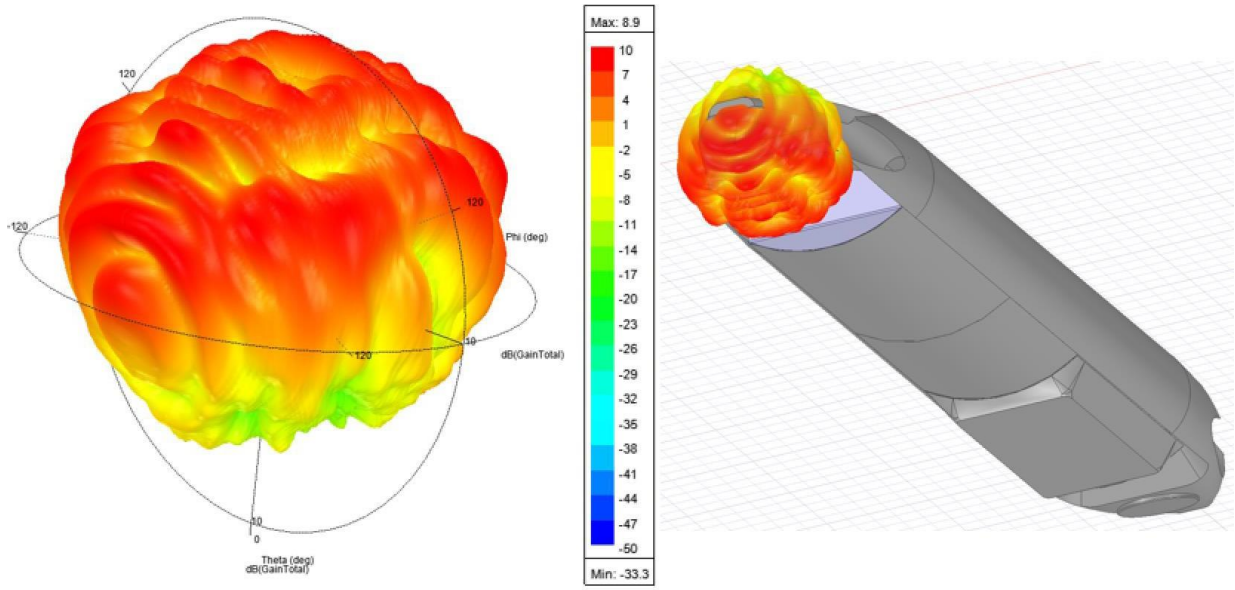

Figure 13 3D Pattern – Rear Pod Section

CONCLUSIONS

Modeling and simulation are of great benefit with respect to time and cost to produce a result. In this case the initial or control pattern was good enough to make an overall assessment resulting in a fast and cheap solution. The greatest asset of simulations are the rapid nature of results. Chamber measurements are always the best option but when a chamber is not available, simulations are the next best option. Another asset of simulation is initial antenna constructs can be created as 3D components. This enables the ability to store a vast amount of components in a library; not limited to antennas and electrical devices. The stored components can be tuned rapidly with slight modifications and may be implemented in different scenarios. The archives created provide easy and fast turnaround for different antenna implementations. Saving time and money.

Due to anechoic chambers having constraints, i.e., are limited to size, turn table capabilities, cost, and schedule, simulations are of great benefit when constructed accurately. Simulations can aid in choosing optimum antenna placement on a platform before a modification or implementation is completed. Depending on the size of the platform will depended on the chamber needed to perform pattern measurements. Due to chamber constraints, mainly cost, pattern measurements are typically not performed on telemetry antennas. For example, does radiation pattern testing on a $5k antenna placed on an F-16 make sense if the chamber costs $40k per day to operate? Simulation provides the next best thing. A picture is better than intuition. On the other hand, coupling simulation with chamber measurement can mitigate time and costs associated with chamber measurement due to simulations providing an optimized placement before a chamber measurement is performed. Follow on work will need to be completed comparing chamber measured results to simulation results to show the validity of simulation.

Future work will be to bridge the gap of component level (antenna) and antenna on platform in a static environment, to overall flight dynamics level simulation utilization to enhance dynamic link performance prior to flight. Understanding pattern gain and notching coupled with dynamic link software will aid in aircraft route optimization. The goal will be using the same workflow as presented in this paper. The creation of a reference antenna, simulate the reference antenna pattern on an airborne platform, and then import the construct into a dynamic flight simulation environment to perform analysis, aiding in choosing proper flight paths and dynamics.