XB-70 NO. 1

STRUCTURAL STATUS

TSP65-5219

STRUCTURAL DESIGN CONSIDERATIONS

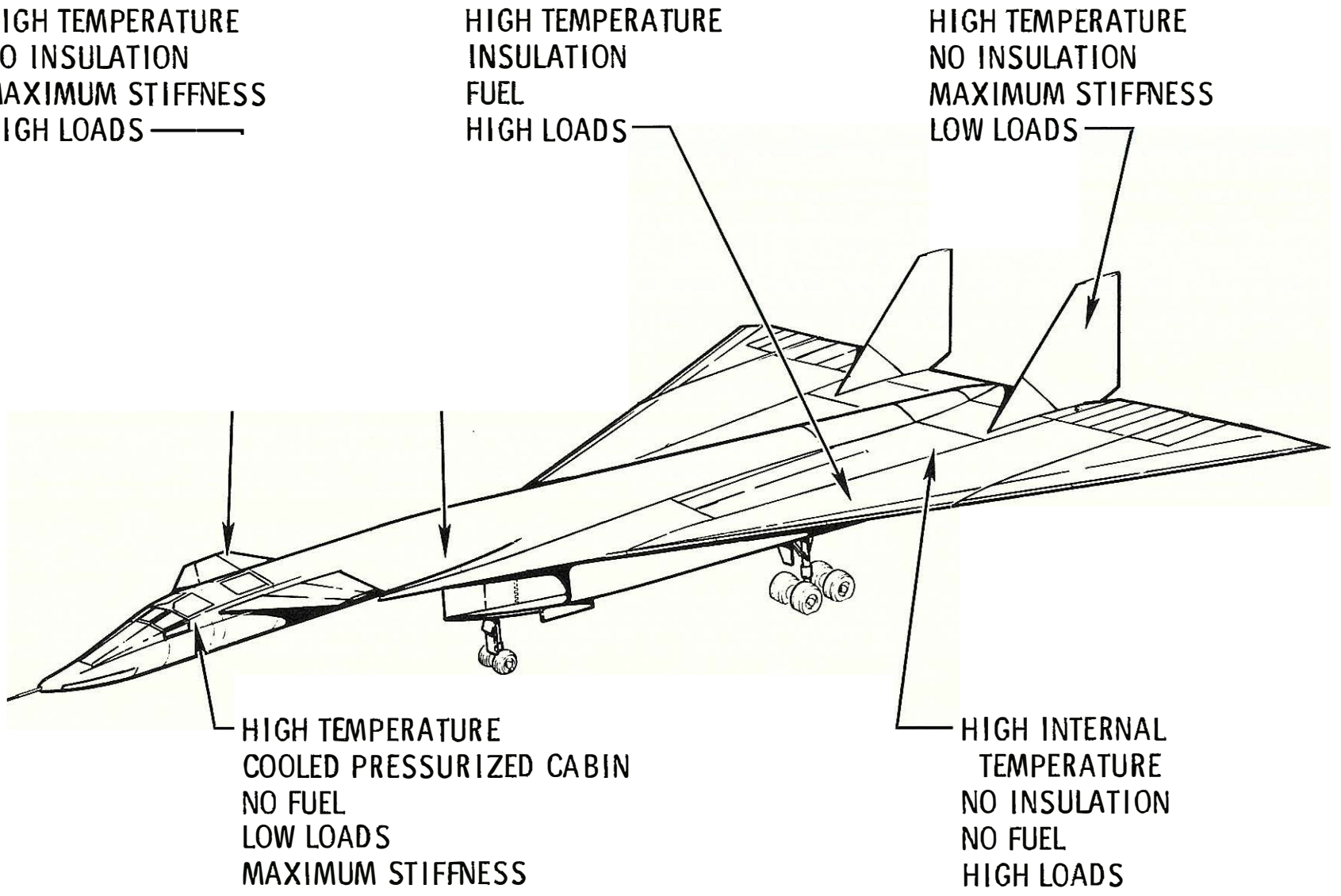

DESIGN CONDITIONS

UPPER TANK BENDING

VERTICAL BENDING

MAX. COND Mn = .95 Nz = 2.66 GUST

MEASURED LOAD 66%
PREDICTED Mn 3.0 55%

MATERIAL ADDED FOR
AEROELASTIC STIFFNESS

SIDE BENDING

MAX. COND Mn = 3.0 Nz = 1.26 Yaw 8.4°
ROLL COND.

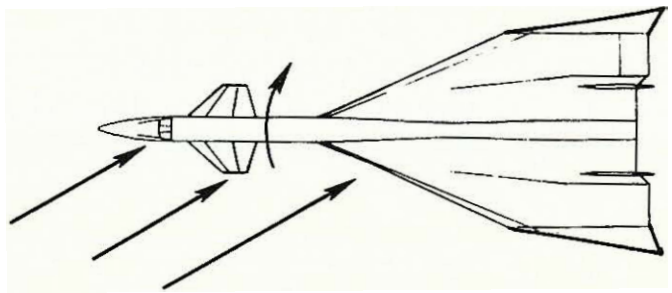

MEASURED LOAD 70% (FLIGHT NO. 12)

FAIL SAFE ANALYSIS

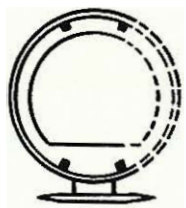

LOAD CAN BE
SUSTAINED WITH
SIDE PANEL FAILED

XB-70A NO.1
MAXIMUM DYNAMIC PRESSURES

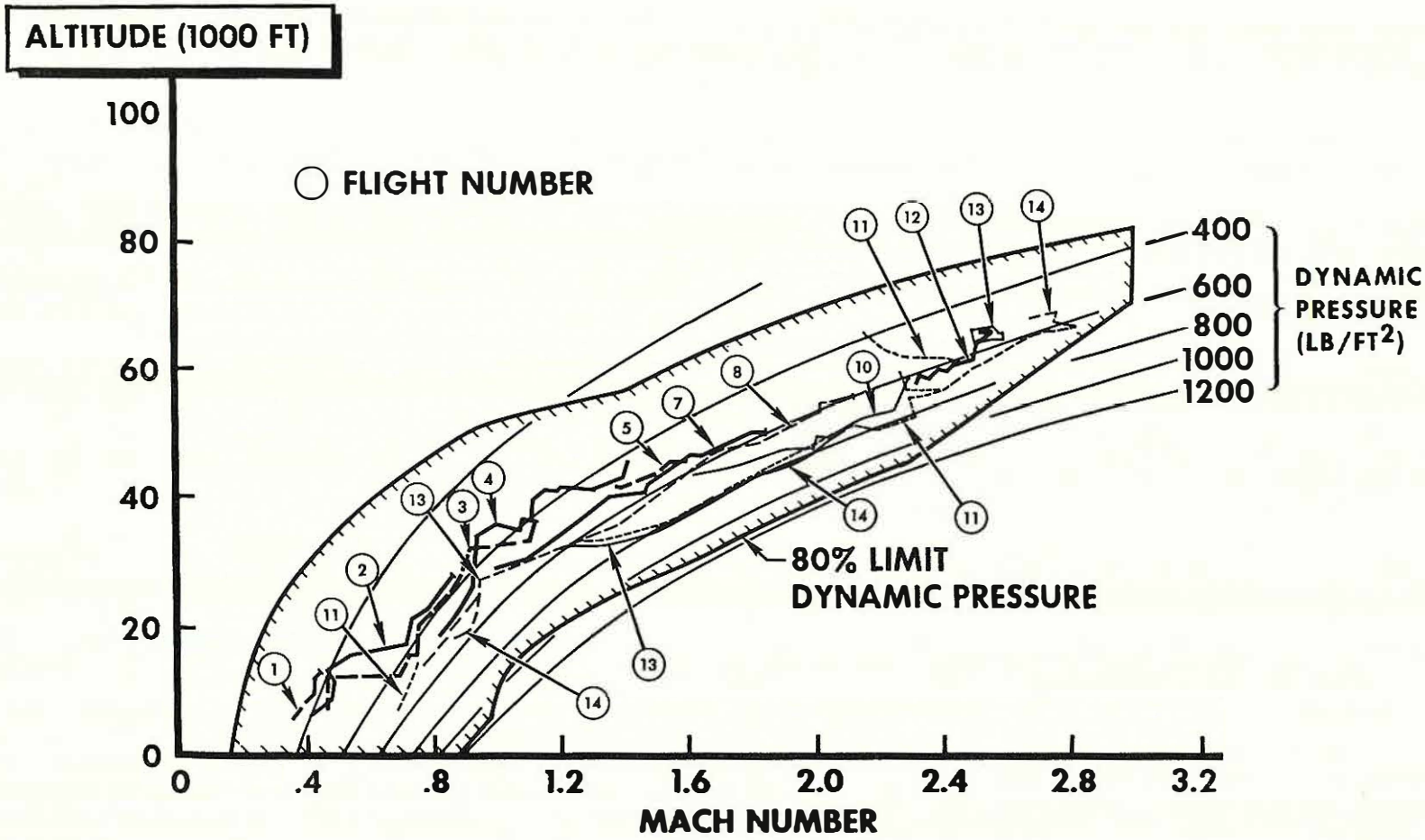

TEMPERATURE RECORDED

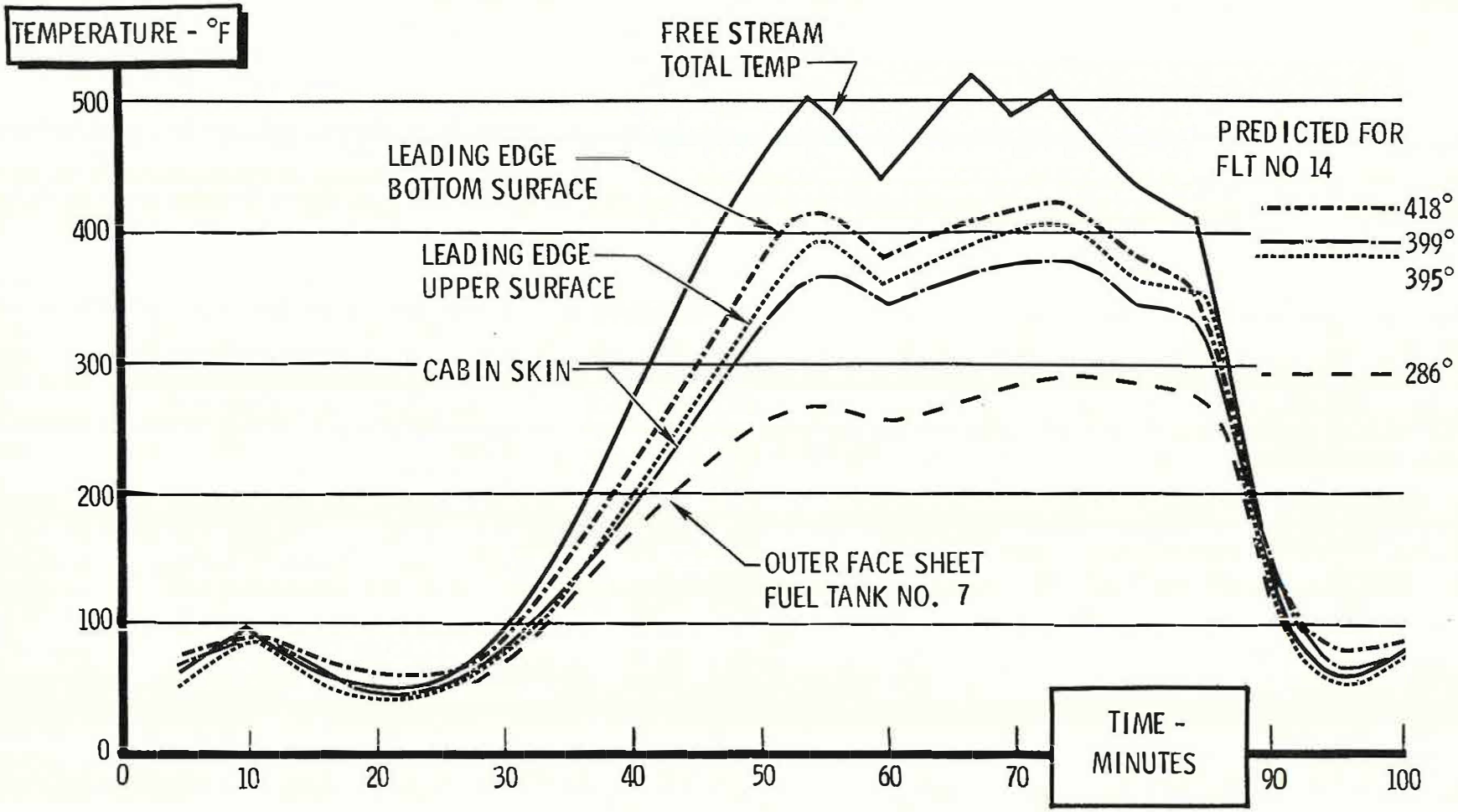

- A / V NO. 1 SCHEDULED FOR Mn 3 FLIGHT ON AUGUST 9

- FLIGHT CANCELLED DUE TO FUEL LEAKS

FRAME VOIDS IDENTIFIED

BLC PANEL DAMAGE LOCATED

SPECIAL INSPECTION, VOID DETECTION
A-V NO. 1 AFTER FLIGHT NO. 15

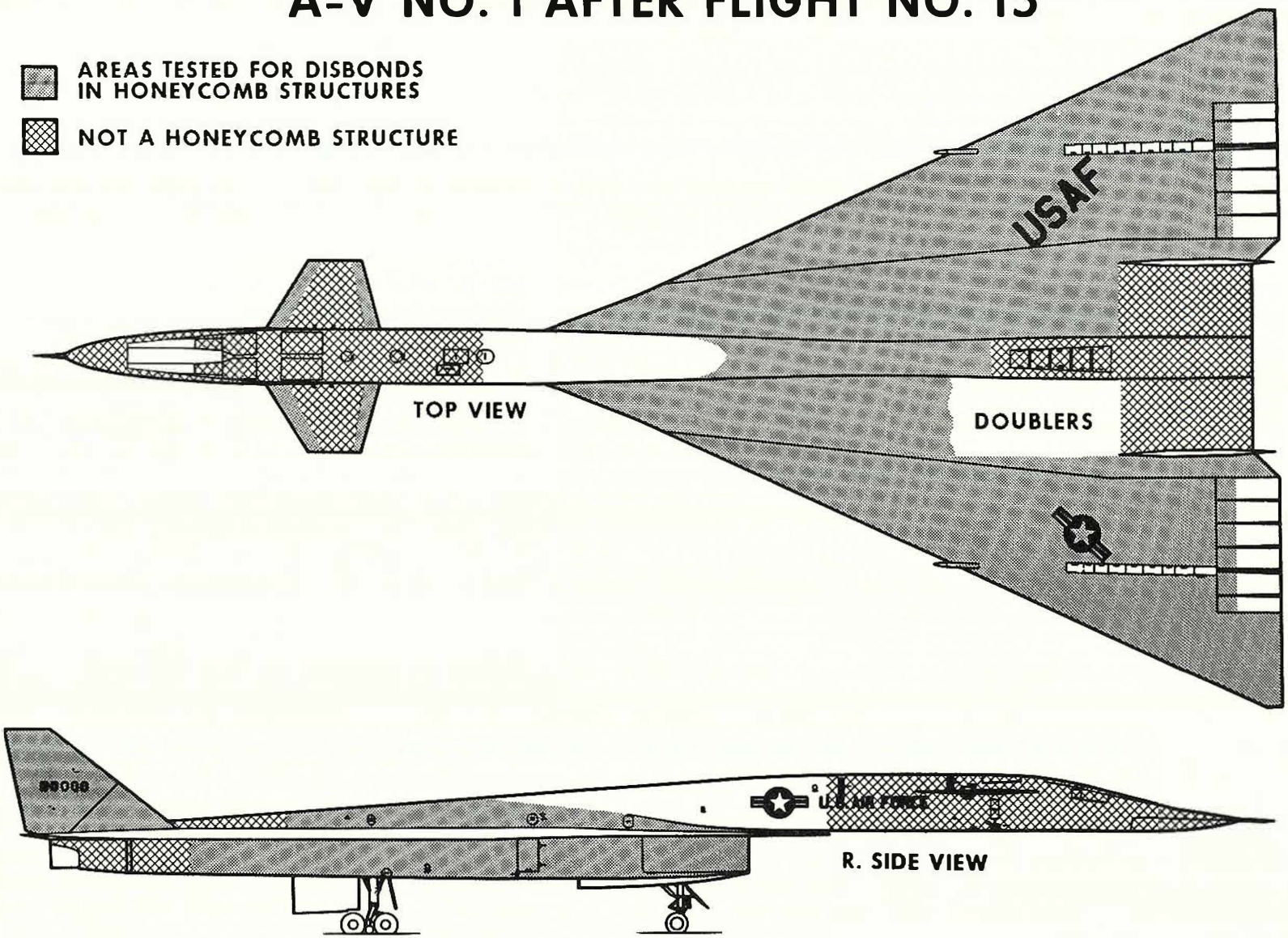

SPECIAL INSPECTION VOID DETECTION
A-V NO. 1 AFTER FLIGHT NO. 15

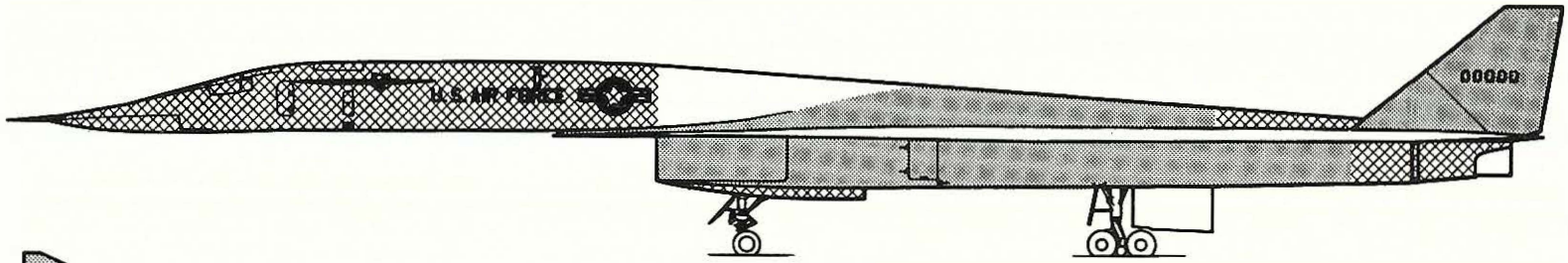

L. SIDE VIEW

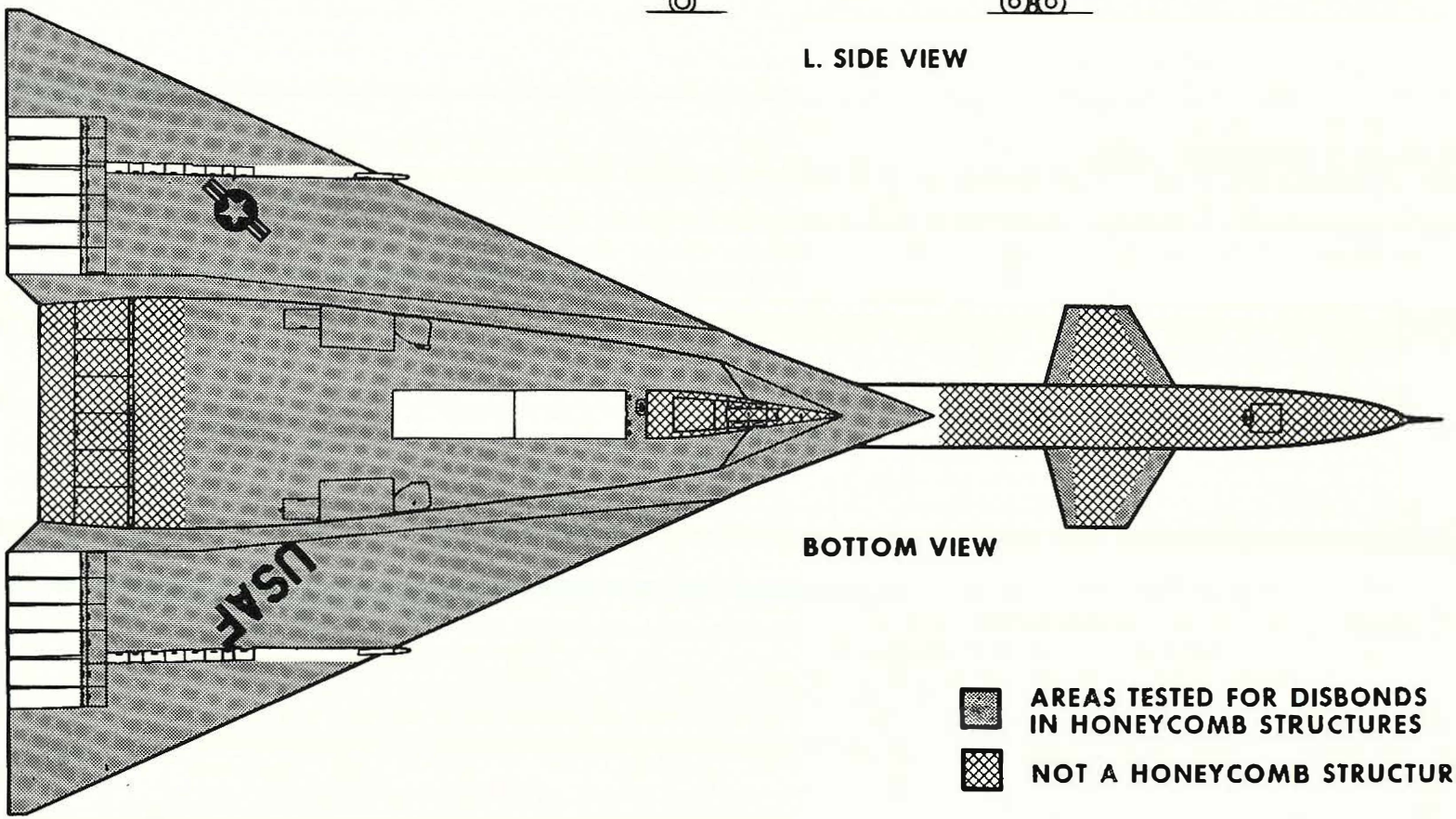

BOTTOM VIEW

AREAS TESTED FOR DISBONDS IN HONEYCOMB STRUCTURES

NOT A HONEYCOMB STRUCTURE

FRAME TEE VOID LOCATION

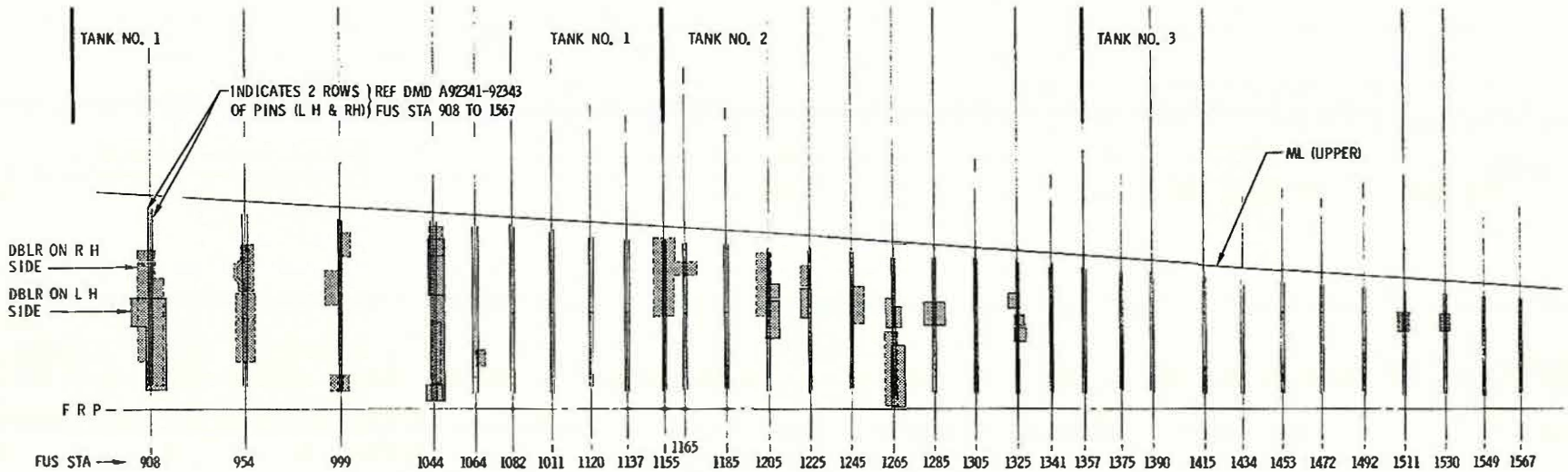

TANK NO. 1 12 DBLRS
TANK NO. 2 14 DBLRS
TANK NO. 3 2 DBLRS
TANK NO. 4 1 DBLR
PERCUSSION PINS ADDED AT 32 STATIONS

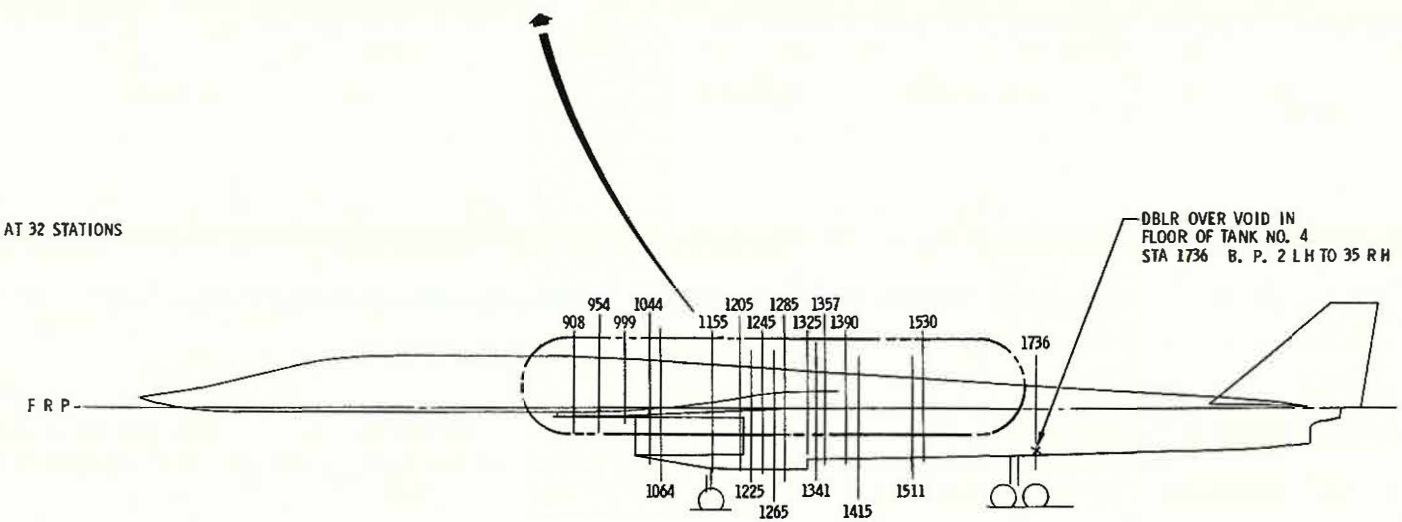

BLC PANEL DAMAGE

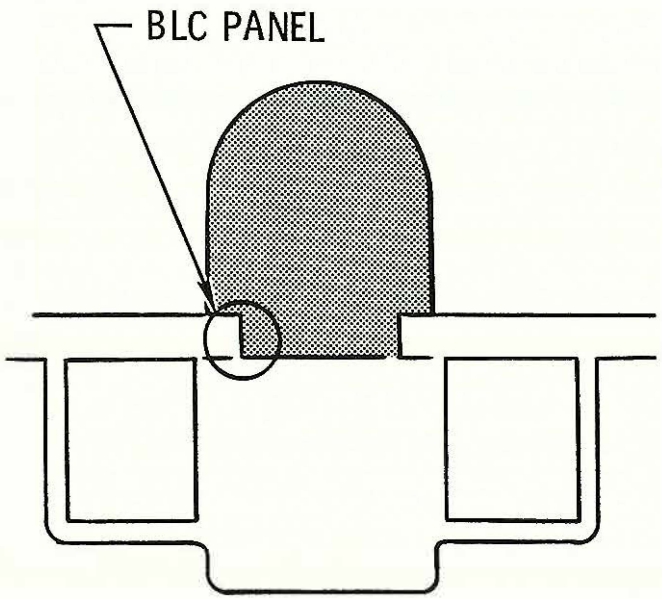

- PREVIOUS PANEL REPAIR (SPOT BRAZED CORRUGATION) PULLED LOOSE DAMAGING FACE SHEET
- SPOT BRAZE ATTACHMENTS ABNORMALLY SMALL
- PANEL REPLACED WITH STIFFENED SHEET METAL
- SIMILAR REPAIRS INSPECTED

FUEL TANK CONFIGURATION

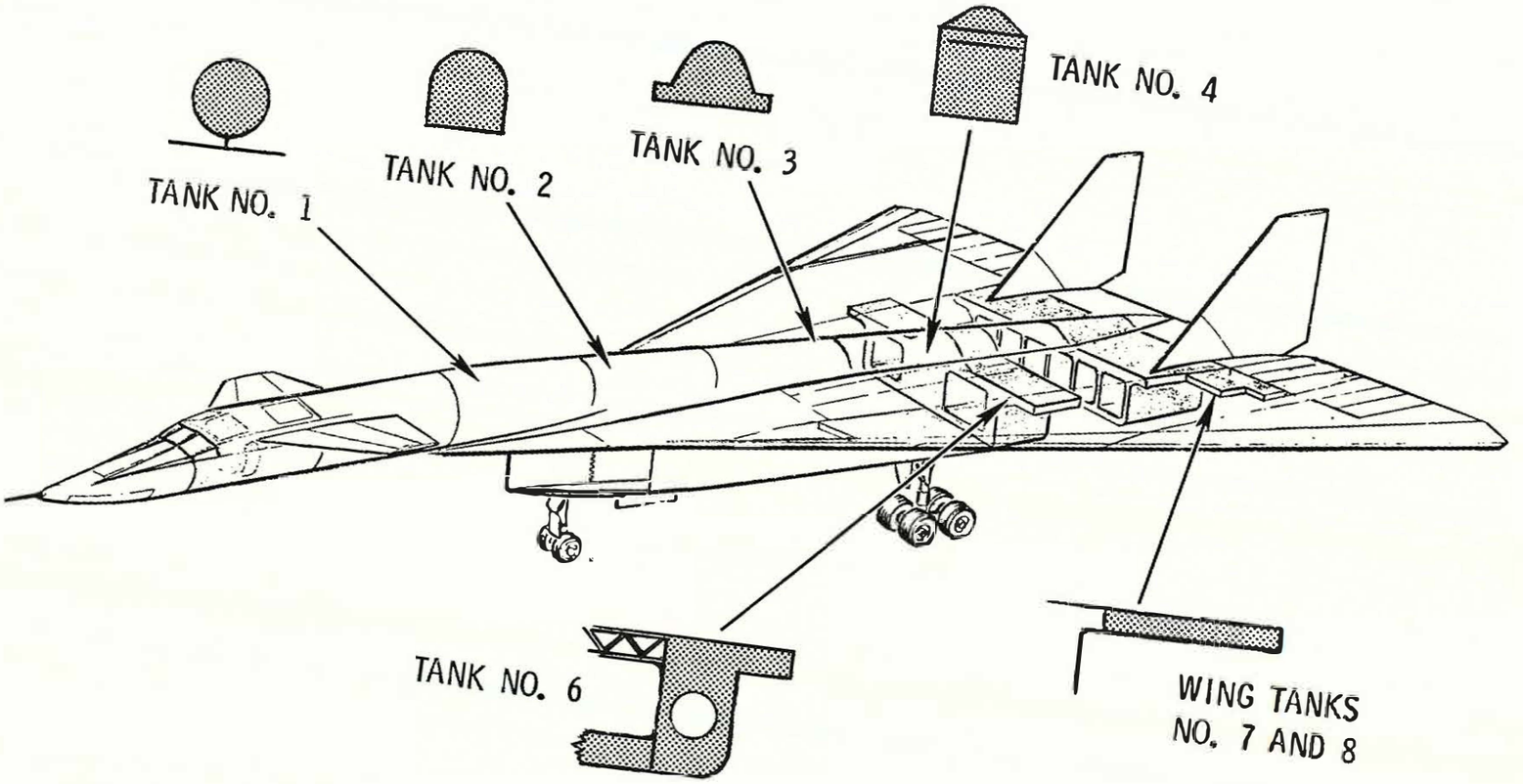

TYPICAL SECTIONS THROUGH TANK WALLS

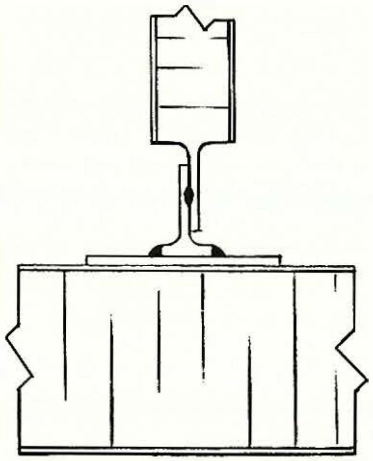

TANKS 1, 2, AND 3

NORMAL LOADS TENDING TO PULL FRAME CAP OFF ARE INDUCED BY THE THERMAL EFFECT OF A CURVED PANEL SUBJECTED TO A DELTA TEMPERATURE.

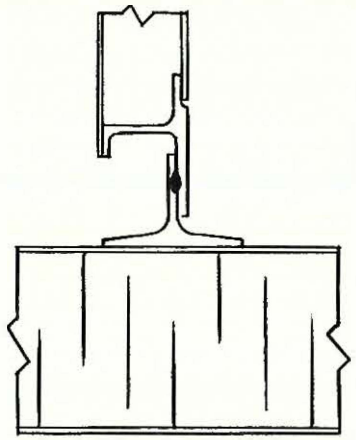

TANKS 4, 5, AND 6

TANK 4 CURVED PANEL IS NOT ATTACHED TO FRAME. OTHER PANELS ARE FLAT OR NEARLY FLAT, WHICH RESULT IN VERY SMALL THERMAL INDUCED NORMAL LOADS.

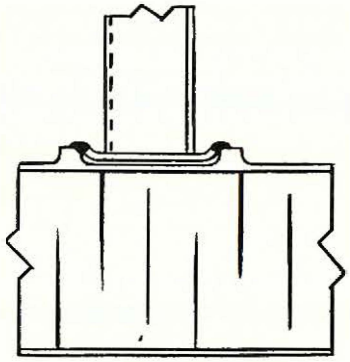

TANKS 7 AND 8

WING PANELS HAVE LARGE RADII (EFFECTIVELY FLAT) WHICH RESULTS IN VERY SMALL THERMAL INDUCED NORMAL LOADS.

FUEL TANK FRAME JOINT DETAILS

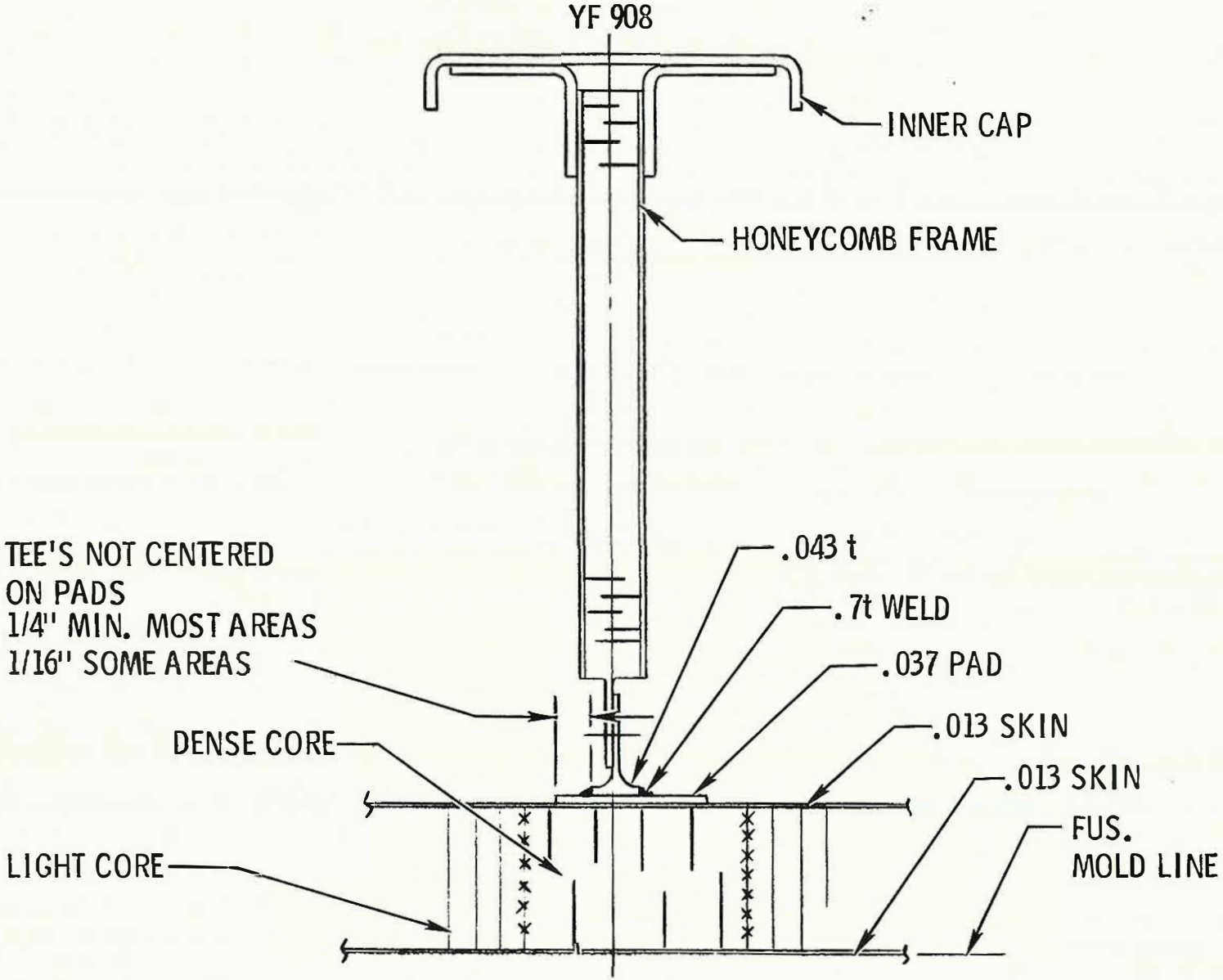

FRAME TEE VOIDS

- REMOVAL AND REWELDING CAN CAUSE DISTORTION OF PAD, OXIDATION OF BRAZE ALLOY, AND SMALL VOIDS

- VOID GREW WITH TIME DUE TO A COMBINATION OF -

  - RESIDUAL STRESS
  - FLIGHT LOADS
  - THERMAL STRESS

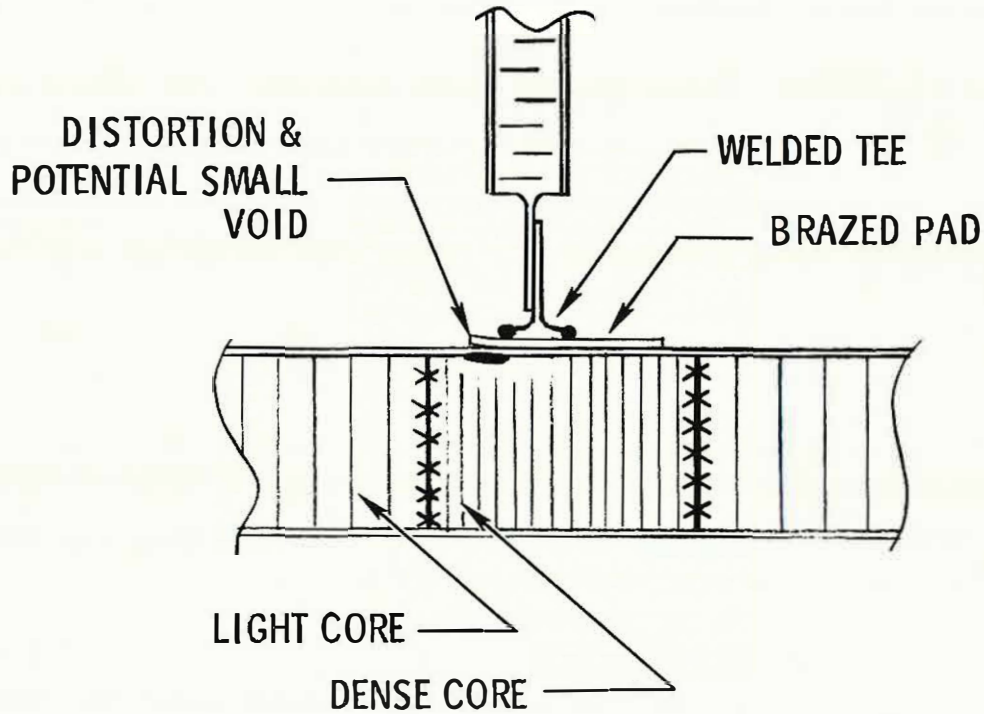

IN PLANE LOADING DUE TO THERMAL EFFECTS

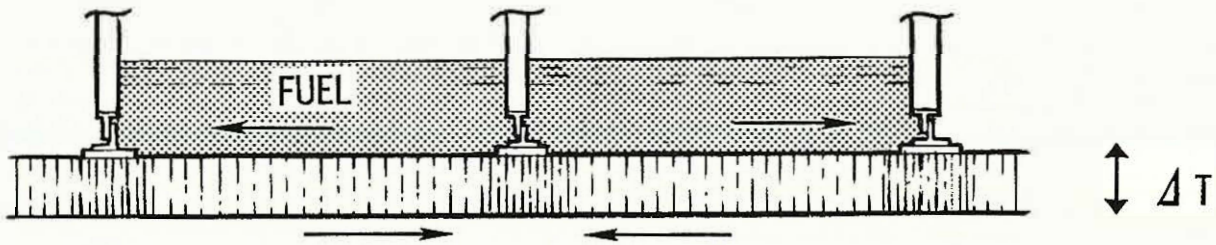

- OUTER FACE SHEET EXPANSION RESTRAINED BY INNER FACE SHEET
- OCCURES TO BOTH FLAT AND CURVED PANELS
- ΔT PRODUCES IN PLANE BI-AXIAL STRESS IN FACE SHEETS
- SMALL EFFECT ON TEE LOADING

TEE LOADING DUE TO THERMAL EFFECTS

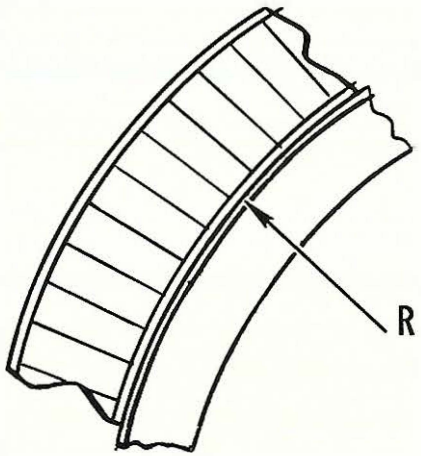

NO ΔT

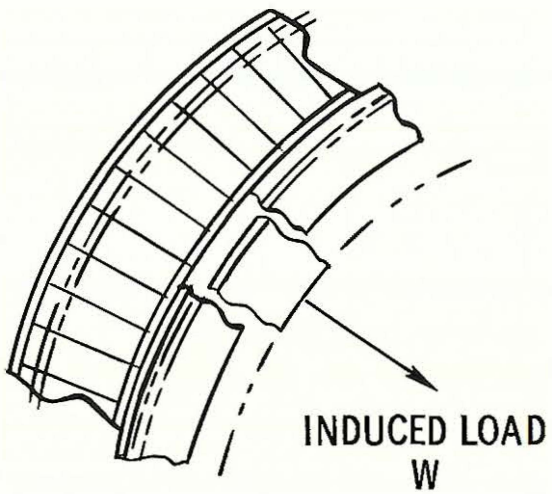

HIGH ΔT

$$W = \frac{K \quad \Delta T}{\sqrt{R}}$$

- THERMAL LOADS DIRECTLY PROPORTIONAL TO TEMPERATURE DIFFERENTIAL
- FUEL TANK QUANTITIES DETERMINE INDIVIDUAL TANK ΔT
- THERMAL LOADS NOT INTRODUCED IN FLAT SURFACE

FRAME TEE LOAD

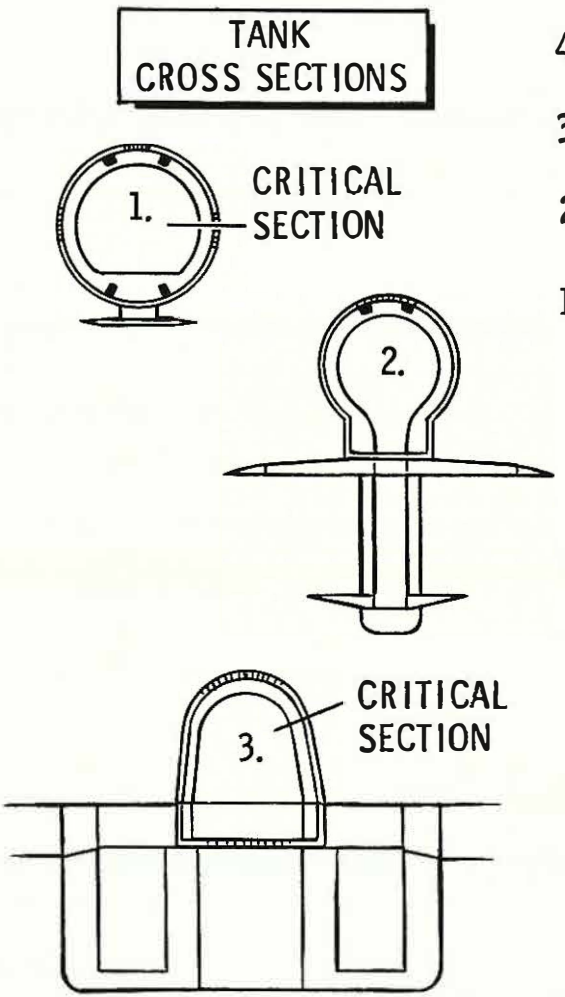

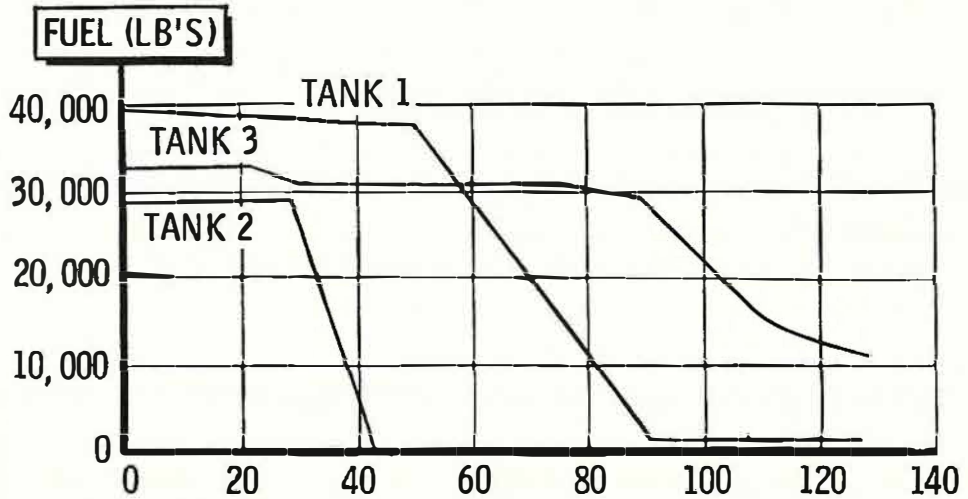

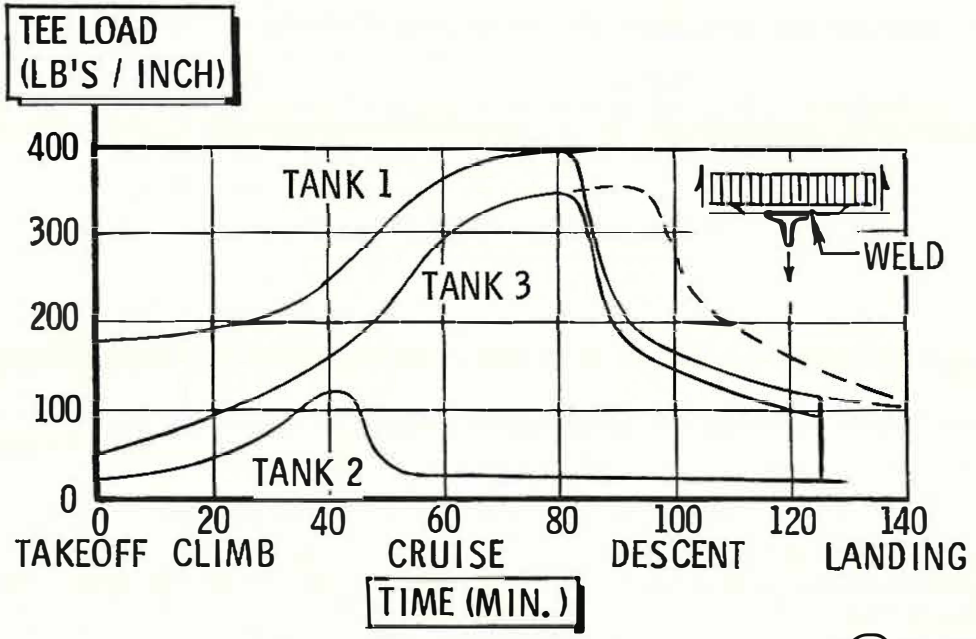

FLIGHT TEST LOADS

TANK NO. 1

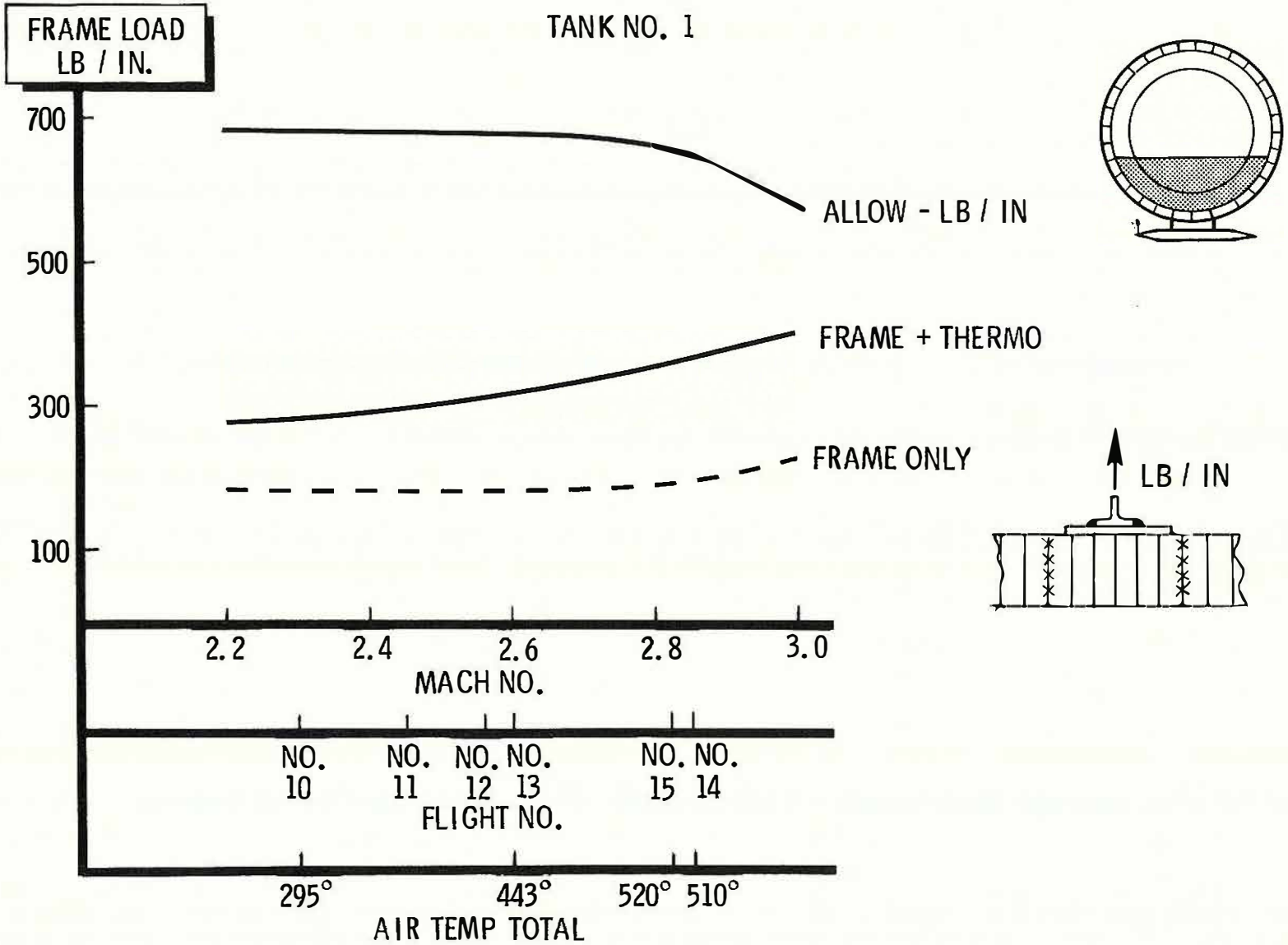

AIR VEHICLE NO. 1 - FLIGHT 1 - 16

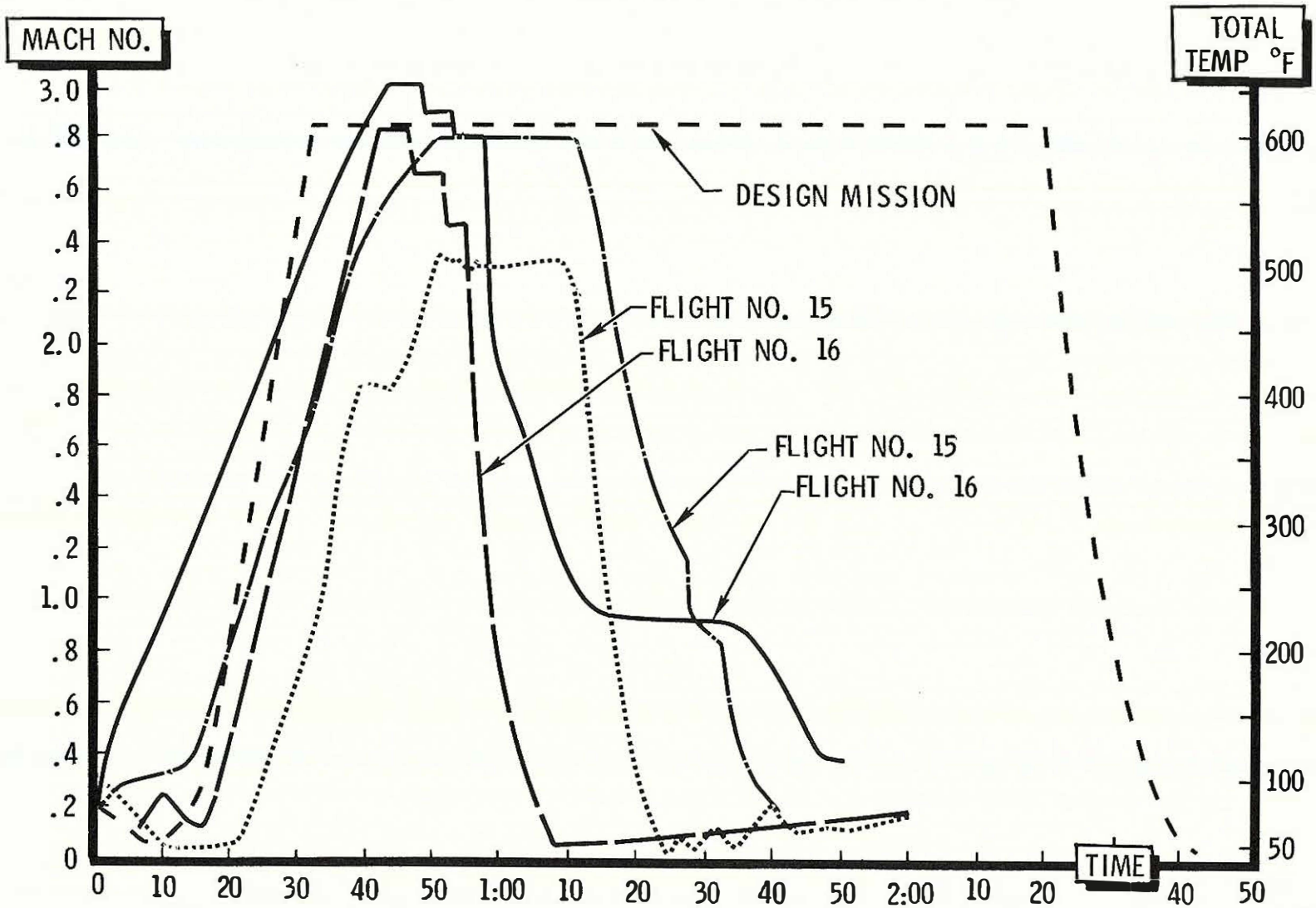

PREDICTED STRUCTURAL FUEL TANK NO. 1 - FLIGHT NO. 16

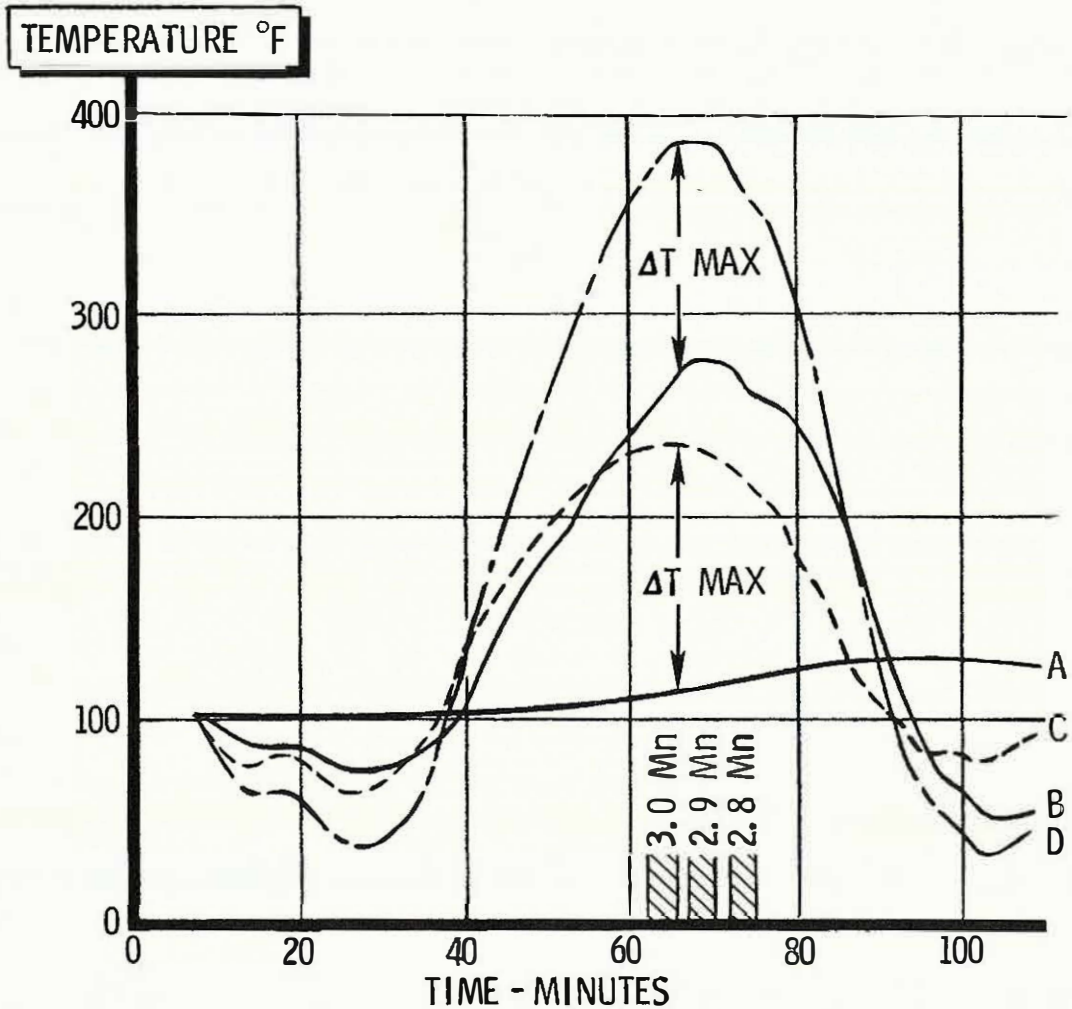

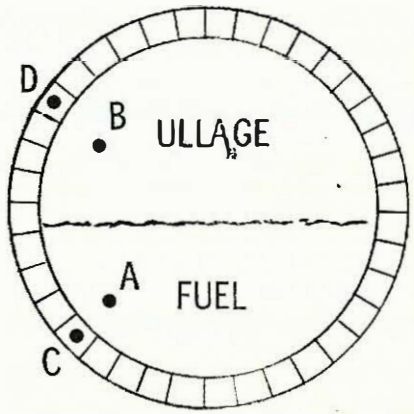

FLIGHT	ΔT MAX. (C - A)	ΔT MAX. (D - B)
15	112 °F	104 °F
16	122 °F	115 °F
DIFFERENCE BETWEEN NO. 16 Mn 3.0 AND NO. 15 Mn 2.8	10 °F	11 °F

LOADS MEASURED IN FLIGHT

(IN PERCENT OF LIMIT STRENGTH)

	MAX MEASURED	MAX AT 2.8M FLIGHT	PREDICTED FOR 3.0 M
HORIZ TAIL	48% @ .4M CLIMB	22% IN TURNS	19% CRUISE
VERT TAIL	34% @ .4M CLIMB	18% IN YAW	18% CRUISE
WING TIP	34% @ .4M CLIMB	21% IN TURN	16% CRUISE
WING ROOT	49% @ .4M CLIMB	20% IN TURN	17% CRUISE
FUSELAGE (SIDE BEND)	70% @ 1.86M YAW	10% CRUISE	10% CRUISE
(VERT BEND)	66% @ .4M CLIMB	55% CRUISE	55% CRUISE
DUCT PRESSURE	75% @ 2.85M CRUISE	75% CRUISE	80% CRUISE

SUMMARY

- A / V WORK

  FUEL LEAKS CORRECTED

  FRAME TEE VOIDS REPAIRED

  PRECAUTIONARY FRAME PINS INSTALLED (TO PREVENT GROWTH OF POTENTIAL VOIDS)

- INSPECTION

  COMPLETE A / V LEAK CHECKED

  COMPLETE EXTERNAL AND DUCT STRUCTURAL INSPECTION

- FLIGHT DATA

  STRUCTURAL & THERMAL DATA (FLTS 14 & 15) REVIEWED & CORRELATED WITH PROJECTED DATA FOR Mn 3.0

XB-70 NO. 1

FLIGHT TEST STATUS

A/V NO. 1 SCHEDULE

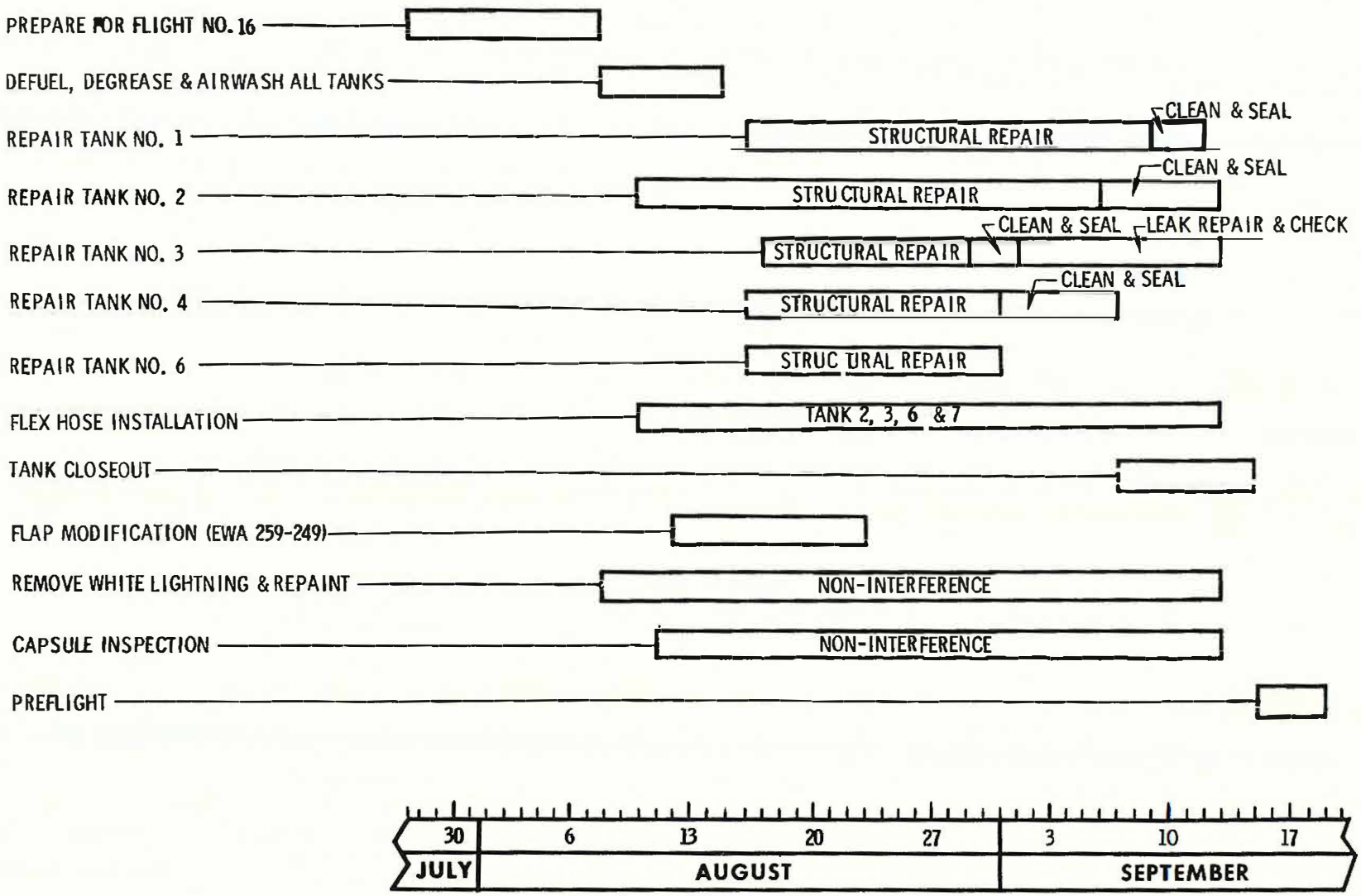

AIR VEHICLE NO. 1 - FLT 16

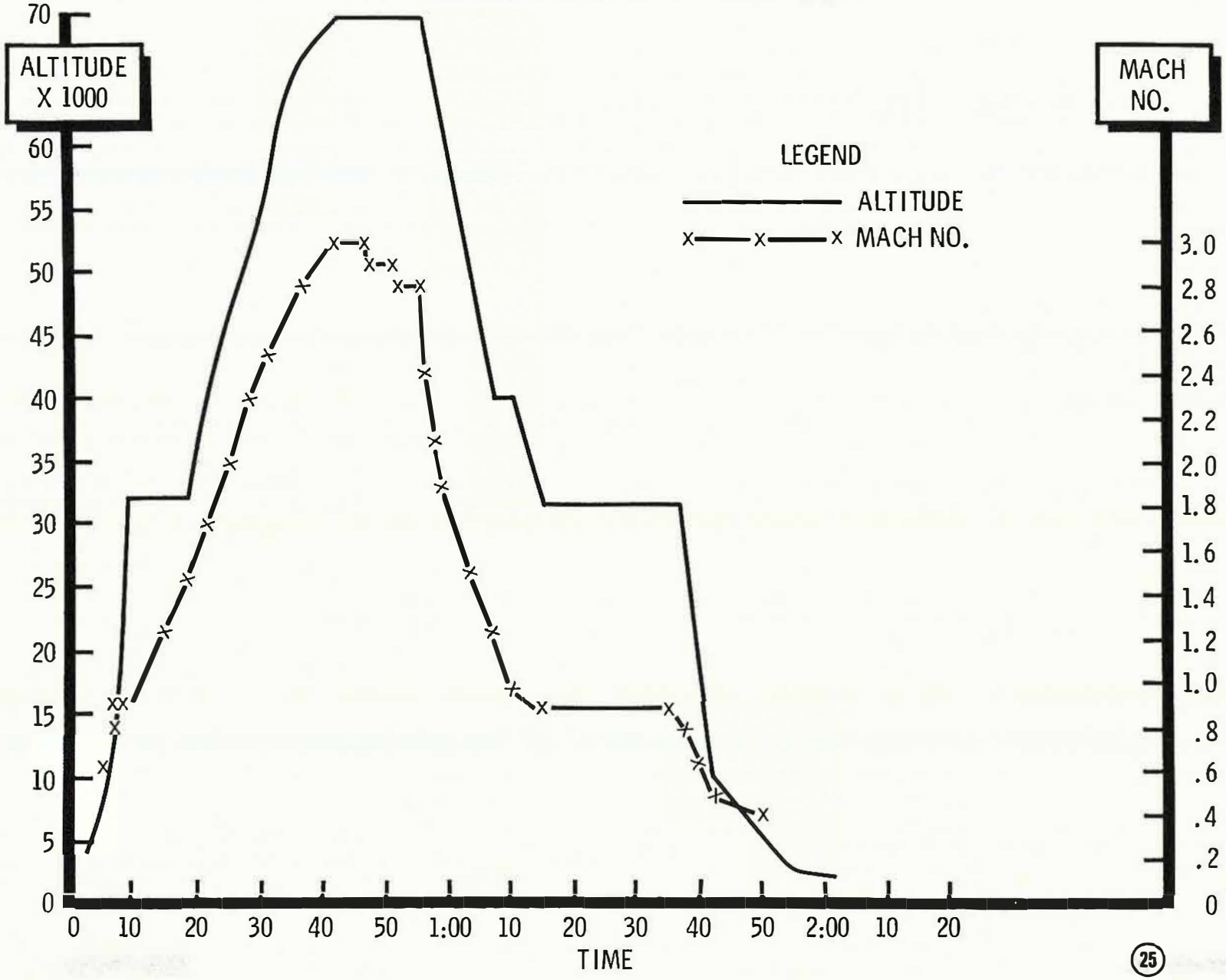

AIR VEHICLE NO. 1 - FLTS 17 AND 18

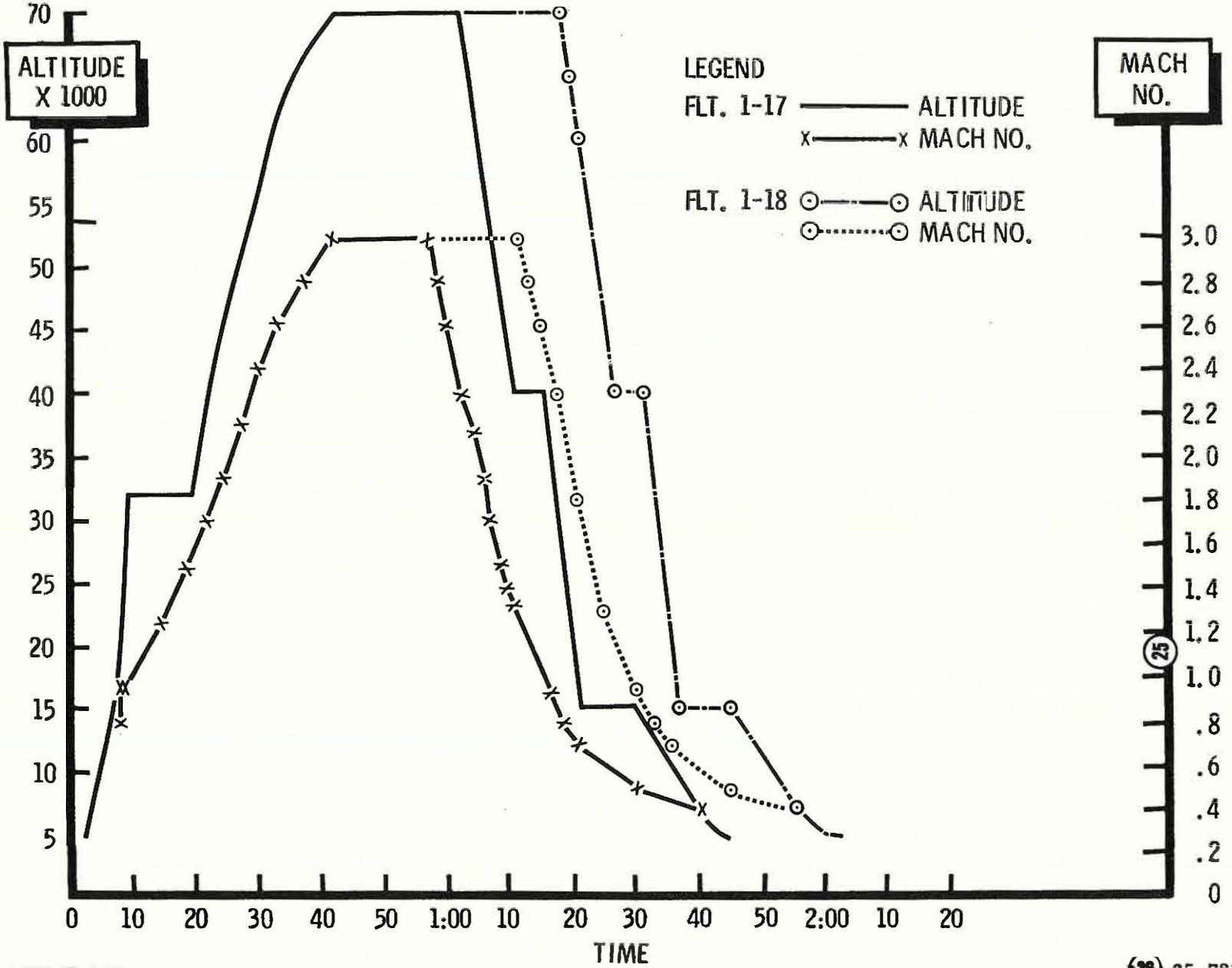

A/V NO. 2 SCHEDULE

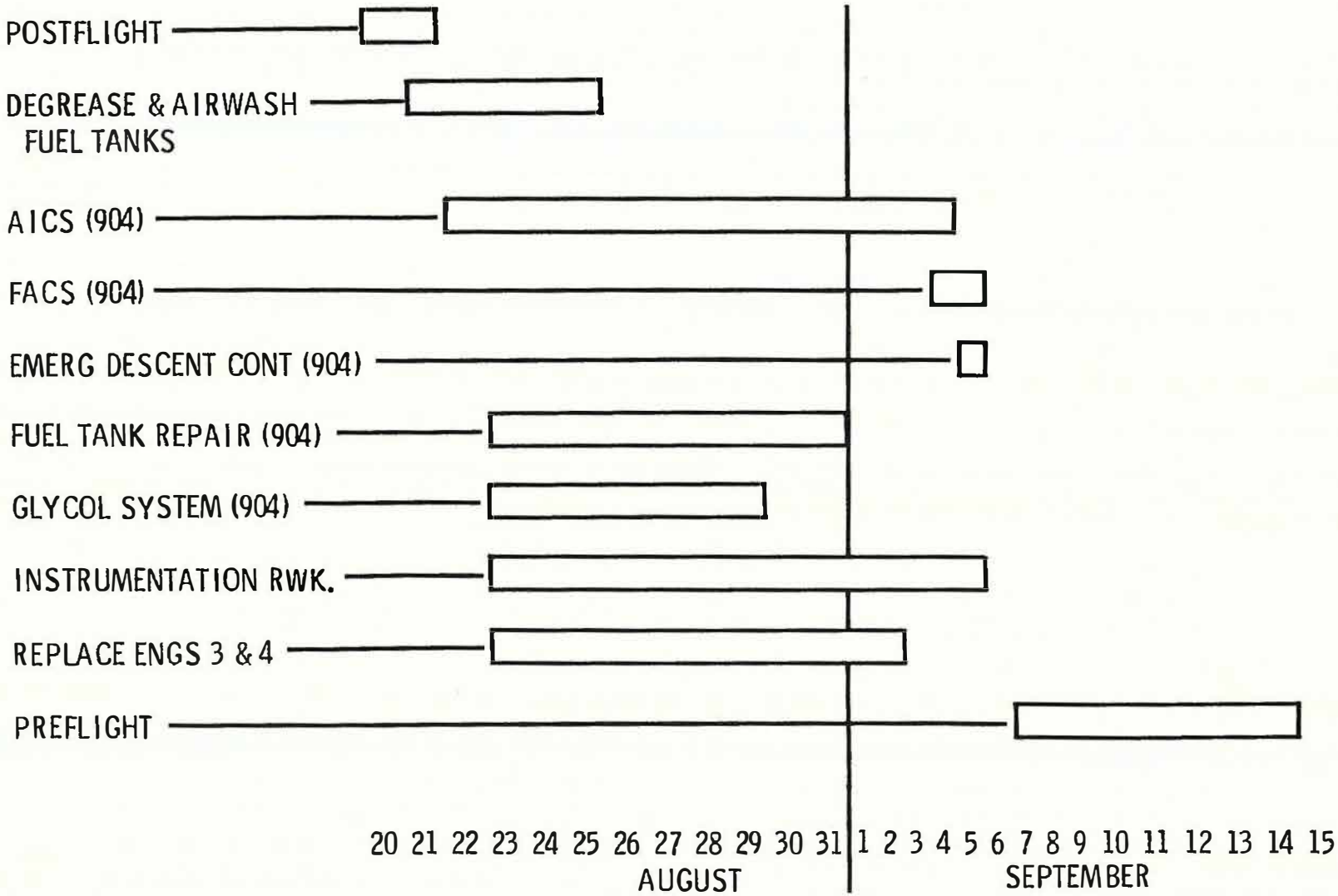
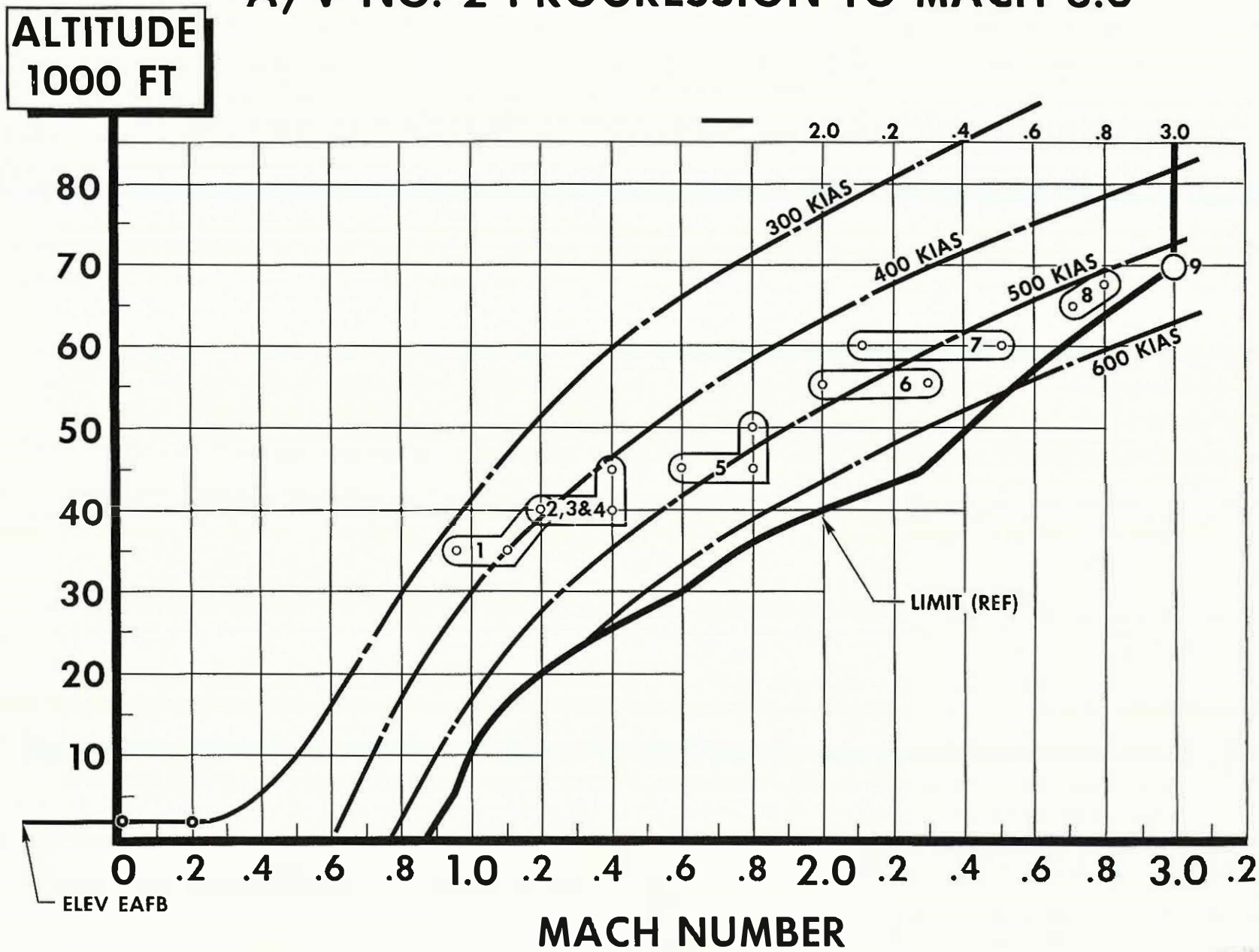
A/V NO. 2 PROGRESSION TO MACH 3.0