DISTRIBUTION STATEMENT A: Approved for public release; distribution unlimited.

SODA: Polar Ocean Positioning (SODA-POP)

FINAL REPORT

Lee Freitag
Woods Hole Oceanographic Institution
Woods Hole, MA 02543
phone: (508) 289-3285 email: lfreitag@whoi.edu

Award: N00014-16-1-2347

LONG-TERM GOALS

The effort reported upon here is part of the APL/UW project entitled *An Annual Cycle of Atmosphere-Ice-Ocean Interactions using Autonomous Platforms* and the related work by Jim Thomson and Martin Doble. This segment of the project will provide the acoustic beacons and updated acoustic receivers for the UW Seagliders so that they can navigate in real-time throughout the winter under Arctic ice in the Beaufort Sea.

Background and Scientific Motivation[1]

The Arctic continues to evolve into a state that exhibits increased seasonality, with vast regions experiencing a broad range of ice conditions over an annual cycle. The Beaufort Sea provides a striking example of this change, with the dramatic northward summer sea ice retreat exposing large areas of the deep Canada Basin to periods of low ice concentration or, in the southern regions, open water. This annual cycle in ice cover should couple to corresponding changes in the processes that govern momentum and buoyancy transfer between atmosphere, ice and upper ocean. The recent Marginal Ice Zone DRI (MIZ DRI) focused on the impact of this increased open water fraction on the processes that control sea ice evolution within the MIZ. This proposed study focuses on how such changes impact the transfer of momentum and buoyancy from the atmosphere into the upper ocean, and thus their role in governing upper ocean stratification and circulation.

Variability in sea ice extent and properties imprints onto upper ocean structure and internal wave generation by providing a buoyancy source (freshwater and brine) and by modulating the coupling between atmosphere and ocean (momentum and heat). For example, consolidated pack ice greatly attenuates wind-forcing, while at lower concentrations more mobile ice might efficiently transfer momentum into the upper ocean, driving mixed layer currents, entrainment and mixed layer deepening, and/or internal wave generation.

Changes in the efficiency of momentum and heat transfer will drive changes in the processes that govern lateral and vertical exchange. For example, more efficient coupling between the atmosphere and upper ocean could enhance entrainment at the mixed layer base and internal wave generation. Given the contrasting water masses present in the upper ocean (e.g. Pacific

[1] Common text with coordinated set of proposals by Lee et al, Doble et al, and Freitag.

Summer Water, Atlantic Water), elevated vertical exchanges associated with these processes will impact stratification and circulation within the Canada Basin, with feedbacks to sea ice.

This scientific background provides motivation for the deployment of Seagliders in the Beaufort Sea, and operating them under ice all winter. The remainder of the report focuses on the acoustic navigation system, which was the primary work performed under this grant.

OBJECTIVES

The most challenging technical aspect of the proposed program is operation of the Seagliders under the ice in the Beaufort Sea during the winter and ensuring that they can effectively navigate in real-time. Previous operations in the Davis Strait included real-time navigation decisions made by the Seagliders and their operations were summarized in (Webster, 2014). Subsequently, additional sophistication in the real-time navigation system on the glider has been added (Webster, 2015), utilizing the accurate and high-resolution travel time estimates provided by the ice-based acoustic beacons from the MIZ program (Freitag, 2015).

The MIZ positioning results showed that long ranges could be achieved by placing the sources in the sound channel that is under the warm summer Bering Sea water but above the Atlantic layer. The channel formed by these three layers prevents sound from interacting with the ice where loss will occur at each reflection. The large area of the Beaufort proposed for the study described in the APL/UW SODA proposal requires significant navigation signal coverage because of the area that the Seagliders will traverse. Thus taking advantage of the sound channel at ~100 m will be critical to providing good navigation coverage.

The accuracy of the navigation system will be limited by the combination of errors from the clocks on both the beacons and the Seagliders, plus the accuracy of the acoustic system to measure time of arrival of the signal from the beacon. The estimated +/- 100 m accuracy of the acoustic navigation system has a significant and positive impact on the ability of the Seagliders to localize fronts and small features that are on the scale of kilometers. While real-time navigation does not depend on or require such accuracy, post-experiment interpolation (sometimes called re-navigation) with clock corrections can utilize corrected travel times to enhance geolocation accuracy.

APPROACH

Previous Work

The approach is based on that used for the Marginal Ice Zone (MIZ) DRI, but with some important differences. The success of that project was due in part to the number and distribution of sensors on the ice, combined with the use of gliders profiling both in open water and in the MIZ. The APL/UW Seagliders utilized open-water detection to surface in available leads, and performed real-time navigation using the WHOI acoustic sources that were drifting with the ice. Ranges of more than 400 km were achieved, and the excellent results are attributed to the very phenomena that SODA intends to study: the structure and dynamics of the stratified layers in the upper water column in the Arctic.

The MIZ project was ice-sensor centric and thus the beacons and gliders moved with the ice through the spring and summer. This program focuses on a specific area, and thus the beacons cannot be suspended from the ice. The beacons will instead be mounted on the moorings that

support the scientific sensors in the upper water column, and also on several auxiliary source-only moorings to provide the navigation coverage desired by APL/UW.

The approach is very similar to that used during the MIZ DRI where the signal included both an FM sweep for ranging as well as phase-modulated data containing the location of the transmitter. The signals employed 25 or 50 Hz of bandwidth to provide good temporal resolution, and low-rate coding to provide high data reliability, though at a very low rate, several bits per second. For SODA the source position does not need to be transmitted, making the system much more energy efficient and able to provide positioning pings for several years.

Acoustic Beacon and Receiver Timing

There is one major development will be central to the new beacons and the use of the Micro-Modem 2 as a receiver on the Seagliders: a clock that will minimize drift throughout the deployment period of one year or more. The proposed approach is to use the same clock on both the transmitter and receiver.

WORK COMPLETED

The major activities of the period have been the fabrication and testing of the fixed sound sources for deployment on the SODA science cruise aboard the Healy in September-October 2019. The acoustic sources consist of a WHOI Micro-Modem as the transmitter system, a 900 Hz acoustic transducer, a calibrated clock subsystem, and a large lithium primary battery pack (8 KWH). The electronics and battery are in a 7-inch diameter aluminum housing which is held within a cage that is designed to be a strength-member in a subsurface mooring.

The core electronics were based closely on previous designs, but the acoustic amplifier design was updated for the new set of transducers that were fabricated for this deployment. The transducers were made to withstand potentially deeper source depths because of the possibility of over-shoot during initial deployment, or draw-down from episodic eddies that increase currents in the upper part of the water column. The transducer and amplifier combination was tested together in preparation for the cruise.

The clocks for the system were based on the Seascan design, which is a temperature-compensated clock that is commonly used for moderate accuracy applications. This approach was feasible because the mooring motion may be up to several hundred meters, which is similar to the accuracy of the clock over one year. Another option that was considered was use of a chip-scale atomic clock (CSAC), but these units take at least ten times more energy, so the savings is considerable by use of the Seascan clock. The individual clocks were tested in a temperature-controlled chamber for several months to check their performance, and the best eight of twelve units were selected.

The block diagram of how the PPS was routed from the Seascan or the GPS (for synchronization mode on deck or in the lab) is shown in Figure 1. Updates to the Micro-Modem 2 FPGA were done to support these different modes.

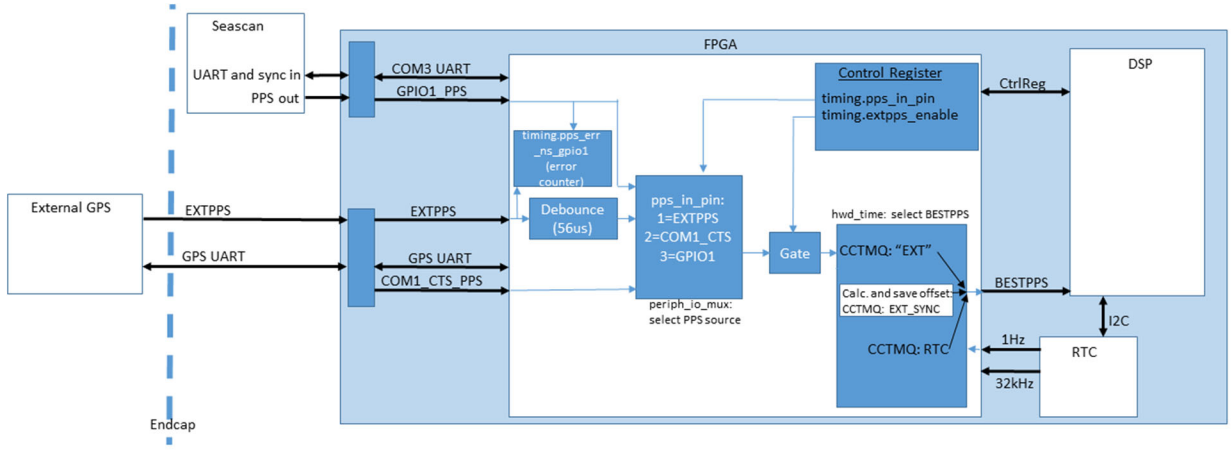

Figure 1 Diagram of routing for the PPS signal from the external Seascan source to the on-board DSP for use in timing the transmitter or receiver.

The acoustic source and acoustic transducer were mounted into a cage for deployment in a vertical fixed mooring. The actual mooring work and mooring components were handled by APL/UW (Jason Gobat). The design has space at the top and bottom for either a 900 Hz transducer or a hydrophone. Either or just one can be configured in the cage. In this case only the 900 Hz transducers was fitted and it was used for both transmit and receive. The control drawing is provided in Figure 2.

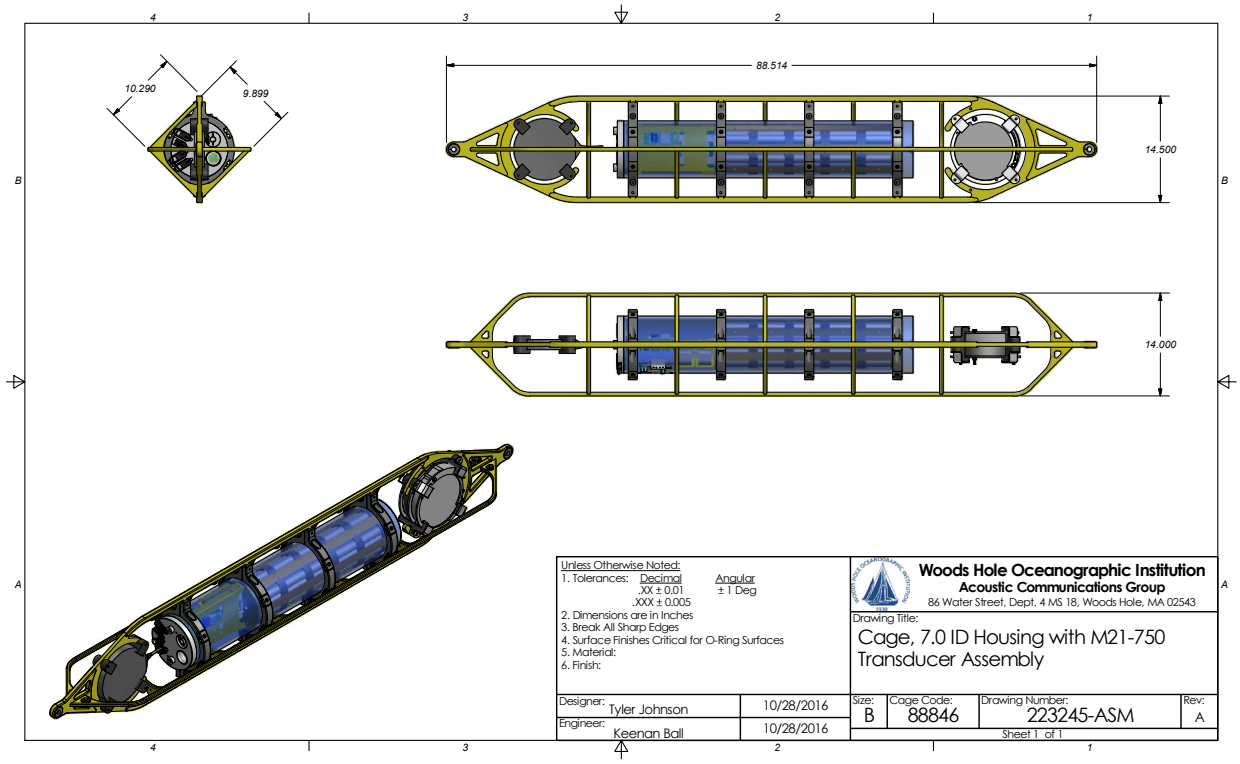

Figure 2 Mechanical envelope drawings of the acoustic source in cage ready for deployment into a mooring.

RESULTS

Eight completed acoustic source units were shipped to Dutch Harbor and re-tested and calibrated (timing test) prior to loading on the USCG Ice Breaker Healy in early September 2019. They were set up on the ship and continued to operate until each was deployed. The sources were deployed at intervals, interleaved with other project-related activities. The sources were monitored by the APL/UW Seagliders in real-time, augmented by Ice Station buoys that were deployed on the ice during the same cruise. During the monitoring period the sources were broadcasting at the correct time.

The mooring deployment was done by APL/UW and a complete operation was easily done in about one half day per navigation mooring. The science moorings had additional sensors which took longer to deploy. A photo of one of the navigation sources being deployed is shown in Figure 3.

Figure 3 Deployment of a navigation source from the Healy during the 2019 cruise.

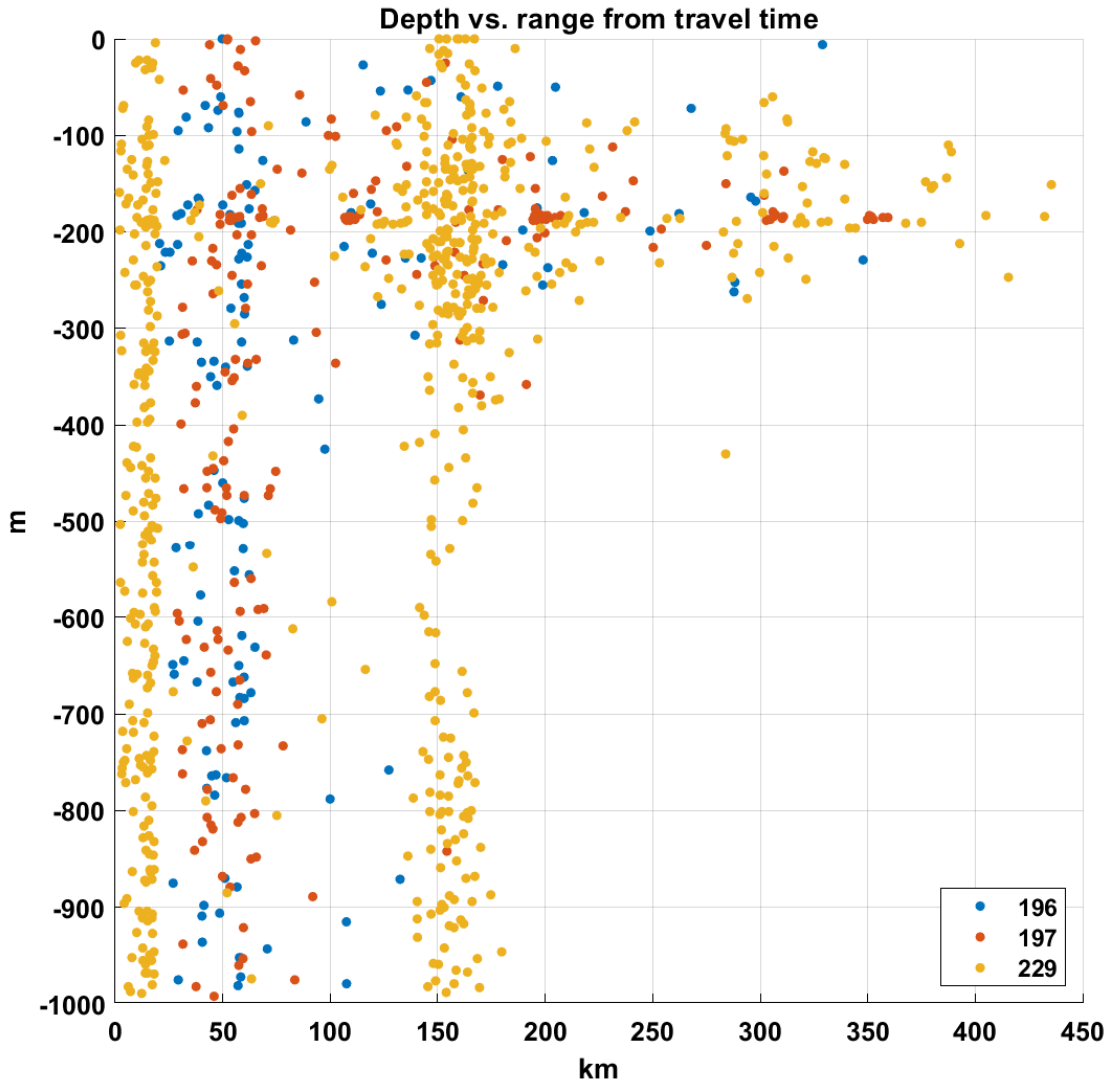

Figure 4 Glider receptions for transmissions from the fixed source array. Figure provided by Jason Gobat, APL/UW. The numbers refer to the serial numbers of the gliders.

The receptions on the glider were typically received out to 150 km over the full depth of a glider dive, and then confined to the sound channel between approximately 100 and 300 meters at ranges from 150 to 400 meters, with fewer receptions as range increased. However, it is important to note that there are not gliders present at all ranges, so the distribution is not uniform with respect to range. This distribution with respect to depth and range is as expected and as modeled using in-situ or recent sound speed measurements by ice-tethered profilers.

IMPACT/APPLICATIONS

The impact of this system is in its capability to provide geolocation for underwater platforms under Arctic ice in winter. Potential uses include gliders as described here, but in addition, profiling floats.

TRANSITIONS

Potential transitions for the technology include any work in the Arctic under ice cover, including science and Navy applications.

REFERENCES

Freitag, L., Keenan Ball, Jim Partan, Peter Koski, and Sandipa Singh, "Long Range Acoustic Communications and Navigation in the Arctic", Proc. IEEE/MTS Oceans Conf., Washington, DC, Oct. 2015.

Webster, S. E., L. E. Freitag, C. M. Lee, and J. I. Gobat, "Towards Real-Time Under-Ice Acoustic Navigation at Mesoscale Ranges," in *IEEE Intl. Conf. Robot. Auto.*, Seattle, 2015.