AD/A-005 815

FIREBIRD INTERFEROMETER

Paul G. J. Morse

Block Engineering, Incorporated

Prepared for:

Advanced Research Projects Agency
Air Force Avionics Laboratory

January 1975

Report AFAL-TR-74-340

069143

FIREBIRD INTERFEROMETER

Block Engineering, Inc.
19 Blackstone Street
Cambridge, Massachusetts 02139

TECHNICAL REPORT AFAL-TR-74-340

January 1975

Final Report for Period July 1972 - December 1974

Approved for public release; distribution unlimited

Prepared for

Advanced Research Projects Agency
1400 Wilson Boulevard
Arlington, Virginia 22209

Air Force Avionics Laboratory
Air Force Systems Command
Wright-Patterson Air Force Base, Ohio 45433

NOTICE

This technical report has been reviewed and is approved.

RB Sanderson
R. B. SANDERSON, Project Engineer

JAMES W. WALTERS, Lt Colonel, USAF
Chief, Reconnaissance and Weapon Delivery
Division

UNCLASSIFIED

SECURITY CLASSIFICATION OF THIS PAGE (When Data Entered)

REPORT DOCUMENTATION PAGE

READ INSTRUCTIONS BEFORE COMPLETING FORM

1. REPORT NUMBER AFAL-TR-74-340	2. GOVT ACCESSION NO.	3. RECIPIENT'S CATALOG NUMBER
4. TITLE (and Subtitle) Firebird Interferometer		5. TYPE OF REPORT & PERIOD COVERED Final Technical Report July 1972-December 1974
		6. PERFORMING ORG. REPORT NUMBER
7. AUTHOR(s) Paul G. J. Morse		8. CONTRACT OR GRANT NUMBER(s) F33615-72-C-2142
9. PERFORMING ORGANIZATION NAME AND ADDRESS Block Engineering, Inc. 19 Blackstone St. Cambridge, MA 02139		10. PROGRAM ELEMENT, PROJECT, TASK AREA & WORK UNIT NUMBERS 62204F/7660/01/12 62301D/2116
11. CONTROLLING OFFICE NAME AND ADDRESS ARPA/STO 1400 Wilson Blvd Arlington, VA 22209		12. REPORT DATE January 1975
		13. NUMBER OF PAGES 54
14. MONITORING AGENCY NAME & ADDRESS (if different from Controlling Office) AF Avionics Lab/RWC Wright-Patterson AFB, OH 45433		15. SECURITY CLASS. (of this report) UNCLASSIFIED
		15a. DECLASSIFICATION DOWNGRADING SCHEDULE

16. DISTRIBUTION STATEMENT (of this Report)

Approved for public release; distribution unlimited

17. DISTRIBUTION STATEMENT (of the abstract entered in Block 20, if different from Report)

18. SUPPLEMENTARY NOTES

19. KEY WORDS (Continue on reverse side if necessary and identify by block number)

Infrared, Spectrometer, Interferometer, Spectroscopy, Radiance, Plumes, Airborne Sensor, IR Sensor, Fourier Transform Spectroscopy

20. ABSTRACT (Continue on reverse side if necessary and identify by block number)

The design and fabrication of a high resolution, cryogenic, Fourier interferometer system for measuring the LWIR radiance of rocket plumes from a U-2 aircraft is described. The interferometer, cooled to LN_2 temperature, has a maximum spectral resolution of 0.5 cm^{-1} in the 5-14μm range. The field of view is 8.7 mrdn and the diameter of the collecting optics is 7". Boil off nitrogen passes through a baffle over the telescope to prevent condensation on the cold optical surfaces.

DD FORM 1 JAN 73 1473 EDITION OF 1 NOV 65 IS OBSOLETE

UNCLASSIFIED

SECURITY CLASSIFICATION OF THIS PAGE (When Data Entered)

Pointing is provided by a gyro-stabilized mount controlled by a joystick. Observation is possible over a range of ±30° in pitch and ±10° in roll from the Zenith.

Electronic and cryogenic systems are permanently mounted within the aircraft Q-bay to provide control and recording functions and to maintain operating temperature of the interferometer.

A ground based data processing system provides the capability of reducing spectra in the field immediately after the flight.

The design and fabrication of the main interferometer bearing to operate satisfactorily at LN_2 temperatures could not be resolved within the time and funding limitations of the contract. Conclusions from an extensive bearing development and testing program are discussed.

FOREWORD

This report describes work performed by Block Engineering, Inc. under Contract # F33615-72-C-2142. The objective of this effort was the design and fabrication of an airborne, high resolution, cryogenic Fourier interferometer system for the LWIR spectral region. A successor contract, # F33615-74-C-1074, provided an interchangeable SWIR interferometer head for the system. Failure to qualify the LWIR main interferometer bearing prevented fully meeting these objectives. However, all other sub-systems were completed and are being used successfully with the SWIR interferometer.

This program was a joint effort, supported in part by ARPA under Project 2116 and in part by AFAL under Project 76600112. The SWIR interferometer was supported by ARPA Project 2116 and AFAL Project 76600113. Aircraft modifications and fabrication of a LLLTV acquisition and tracking system were performed under AFAL Project 76600114 and are described in AFAL-TR-74-247.

SUMMARY

The purpose of this program was the development of a reduced background infrared spectrometer to be installed on board a U-2 aircraft. It was expected that data obtained from the system would help resolve questions concerning long wavelength infrared plume emission mechanisms and specific radiating species in the 5 - 14 micron region. In addition to the spectrometer, the program required the development of a ground based data processing system for on-site quick look analysis of the data returned from the airborne spectrometer.

The spectrometer designed and constructed under this program consisted of a rapid scanning, high spectral resolution Michelson interferometer operating at liquid nitrogen temperatures. The use of modern rapid scanning interferometers to obtain spectral distributions of various sources is rapidly supplanting the application of grating and other instrument types because of the inherent spectral precision in difficult environments, since all wavelengths act simultaneously to produce this signal, and complete high resolution spectral information is obtained in a fraction of a second. The practicality of this instrument at liquid nitrogen temperatures, however, involving as it does a precision mechanical bearing assembly, must still be proven. The technical problems encountered during the bearing development phase of the program precluded the successful qualification of the interferometer for cryogenic operation as originally intended. The remaining support subsystems, including, the data processing system, the two axis stabilized gimbal tracking system, the airborne liquid nitrogen supply reservoir, and the interferometer control electronics were successfully completed and are being used with a replacement ambient temperature operated interferometer spectrometer developed under a successor contract #F33615-74-C-1074.

TABLE OF CONTENTS

TABLE OF ILLUSTRATIONS

SECTION I

INTRODUCTION

1.0 Program Background

The purpose of this program was to fabricate a high resolution Michelson interferometer, mounted in a U-2 aircraft, to study rocket plume effects. It was expected that data obtained from the system would help resolve questions concerning plume radiation mechanisms and specific radiating species in the 5-14 micron region. In addition to the spectrometer, the program required the development of a field transportable data processing system for on-site quick look analysis of the data returned from the U-2 interferometer.

The design and construction of the interferometer spectrometer was based upon experience obtained in the successful development of a similar high resolution cryogenic interferometer for NASA Manned Spaceflight Center, Houston. Although the instruments were similar in many respects, the U-2 spectrometer design incorporated several features which were developmental in nature. Among the design objectives was the development of a cryogenic bearing mechanism operating in a vertical mode. The mechanism was further constrained by the high degree of precision and reliability required in tracking attitudes differing from the vertical axis by as much as 30 degrees. The technical problems encountered with the bearing mechanism precluded the successful construction and operation of the system interferometer as originally required by the program statement of work, consequently program effort was contractually redirected to the remaining system components in expectation of the successful completion of a replacement interferometer spectrometer operating in the 2-5.5 micron region currently being constructed by Block Engineering, Inc. for the Air Force under Contract Number F33615-74-C-1074.

This report presents a summary of the completed twenty-five month activity by Block Engineering to construct and test the Firebird system for the Air Force Avionics Laboratory, Wright-Patterson Air Force Base.

SECTION II

SYSTEM DESIGN

2.0 General

The principal objective of this program was to construct a high spectral resolution Michelson interferometer system operating at liquid nitrogen temperatures in the infrared spectral region, to be mounted on a gimbal platform in a U-2 aircraft.

A second objective was the development of a field transportable data processing system for on-site quick look analysis of the data obtained from the airborne interferometer.

The following list of design specifications define in detail the stated objectives for the complete Firebird program. All of the specification requirements were met by the Firebird system which was ultimately fabricated and delivered, with the exception of the performance specifications for the interferometer.

2.1 Design Specifications

Required Components

The Firebird system hardware shall include:

a) Measurement System
- Telescope
- Liquid nitrogen storage reservoir
- Measurement system control panel/control electronics assembly

b) Pointing System
- Gimbal system
- Pressure resistant bulkhead

c) Recording System
- GFE primary magnetic tape recorder
- GFE time code generator

d) Data Processing System

- Computer
- Auxiliary memory
- Input/output devices including teletype, plotter, and CRO.
- Software

Major Functional Requirements

Measurement System

Spectrometer-Telescope

Performance Characteristics

a. Spectral coverage: 5 to 14 microns

b. Spectral resolution: maximum of .5 cm^{-1} at 10 microns unapodized

c. Spectral resolution increments: .5, 1, 8, 32 cm^{-1}

d. Wavelength precision: .1 cm^{-1}

e. Spectral scan rate: 5 scans/second for 1 cm^{-1} resolution

f. Sensitivity: maximum NESR, 10^{-10} w/(cm^{2}-cm^{1}-ster) at 10 microns per scan at 1 cm^{-1} resolution

g. Operating temperature: 90°K or below

h. Telescope field-of-view: .5 degrees

Specified Components

a. A reference interferometer shall be used to accurately measure the moving signal mirror position and velocity.

b. A multiposition filter wheel, including spectral bandpass elements, shall be used to limit the overall instrument's response.

c. Full internal radiance calibration capability shall be supplied.

d. A cooled shutter shall be provided to exclude external radiation from the detector.

e. The telescope shall be equipped with a retractable capping mechanism to protect optics from sea level-ambient water vapor environment.

Liquid Nitrogen Storage Reservoir

Performance Characteristics

a. Volume: 50 liters of LN_2 as a design goal

b. Hold time: minimum of six hours

Specified Components

a. The storage reservoir shall incorporate heating elements to initiate transfer of LN_2.

b. The vessel shall employ three discrete level indicators.

Control Electronics/Control Panel

Performance Characteristics

a. Circuits to control the spectrometer, tape recorder, telescope cap, and the LN_2 storage vessel

b. Control panel shall provide connectors for monitoring interferogram, laser signal and white light signal.

Pointing System

Gimbal System

Performance Characteristics

a. Gimbal excursion: ±30 degrees in pitch
±10 degrees in roll

b. Gimbal Maximum Rate: greater than or equal to 2.5 degrees/second in both axes

c. Gimbal Precision: 15 milliradians accuracy at a constant speed target after initial acquisition

d. Gimbal Stabilization: ±3 degrees excursion in 2.2 seconds-pitch
±3 degrees excursion in 4.5 seconds-roll

Specified Components

a. A GFE joystick shall be employed for gimbal control.

b. Gimbal control electronics shall be furnished, including connections for driving slaved T.V. gimbals

c. Position readout shall be provided with an accuracy of ±.5 degrees over the full excursion in both axes

Pressure Resistant Bulkhead System

Specified Components

a. Bulkhead shall be compatible with existing airframe and spectrometer in terms of load capability, size and electrical feed through requirements.

Recording System

Primary Magnetic Tape Recorder

Specified Components

a. The recorder shall be a GFE 14 track Leach MTR 3200A magnetic tape recorder.

b. Provision shall be made to bypass the recorder and input directly to the data processing system.

c. Electronics shall be provided to record various system housekeeping data and orientation data from the gimbal readouts.

General Airborne System Specifications

a. The system shall operate from aircraft power using 400 Hz 115V and 28Vdc power systems.

b. The combined weight of the system shall not exceed 350 pounds.

c. System components exterior to the pressure bulkhead shall operate at altitudes up to 75,000 feet. Components contained within the aircraft cabin shall operate at pressures corresponding to altitudes up to 30,000 feet.

d. The system shall operate under the constraint of external temperatures typical of 50-75,000 feet altitude.

Data Processing System

Performance Characteristics

a. The DPS shall Fourier transform the interferograms to yield suitably apodized, phase corrected spectra, up to 8192 points.

b. The DPS shall be capable of reading calibration and correction curves from digital magnetic tape.

c. The system software shall provide for the subtraction of instrumental and atmospheric backgrounds. The final output is to be an absolute spectral radiance or irradiance as a function of either wavelength or wavenumber.

d. Provision shall be made for signal averaging in both interferogram and spectrum space.

e. The software shall permit addition, subtraction, multiplication, and division of any pair of disc files without loss of original data in either file.

f. Programs shall be supplied to compute black-body radiances for $0 < T < 6000$°K.

g. The software should permit entering time dependent correction factors, such as range and orientation data, and correlating them, through the clock signal, with the corresponding interferogram in the input string.

h. Programs shall be supplied to permit conversion of output radiance plots from wavenumber units to wavelength units and plotting radiances either linearly or logarithmically.

2.2 Design Approach

General System Description

The Firebird interferometer spectrometer system consists basically of four inter-related subsystems:

(1) Measurement
(2) Pointing
(3) Recording
(4) Data Processing

Some of these categories contain more than one readily identifiable hardware item. There are in fact fourteen components which meet this criteria, see Figure 1.

(1) telescope
(2) interferometer
(3) liquid nitrogen storage reservoir
(4) control panels
(5) measurement system electronics
(6) gimbal assembly
(7) gimbal electronics
(8) joystick
(9) pressure resistant bulkhead
(10) tape recorder
(11) time code generator
(12) data processing system
(13) gimbal position readout
(14) ground support panel

2.3 Subsystem Description

2.3.1 Measurement System

The measurement system contains the telescope, interferometer, LN_2 storage tank, and the control panels/control electronics assemblies.

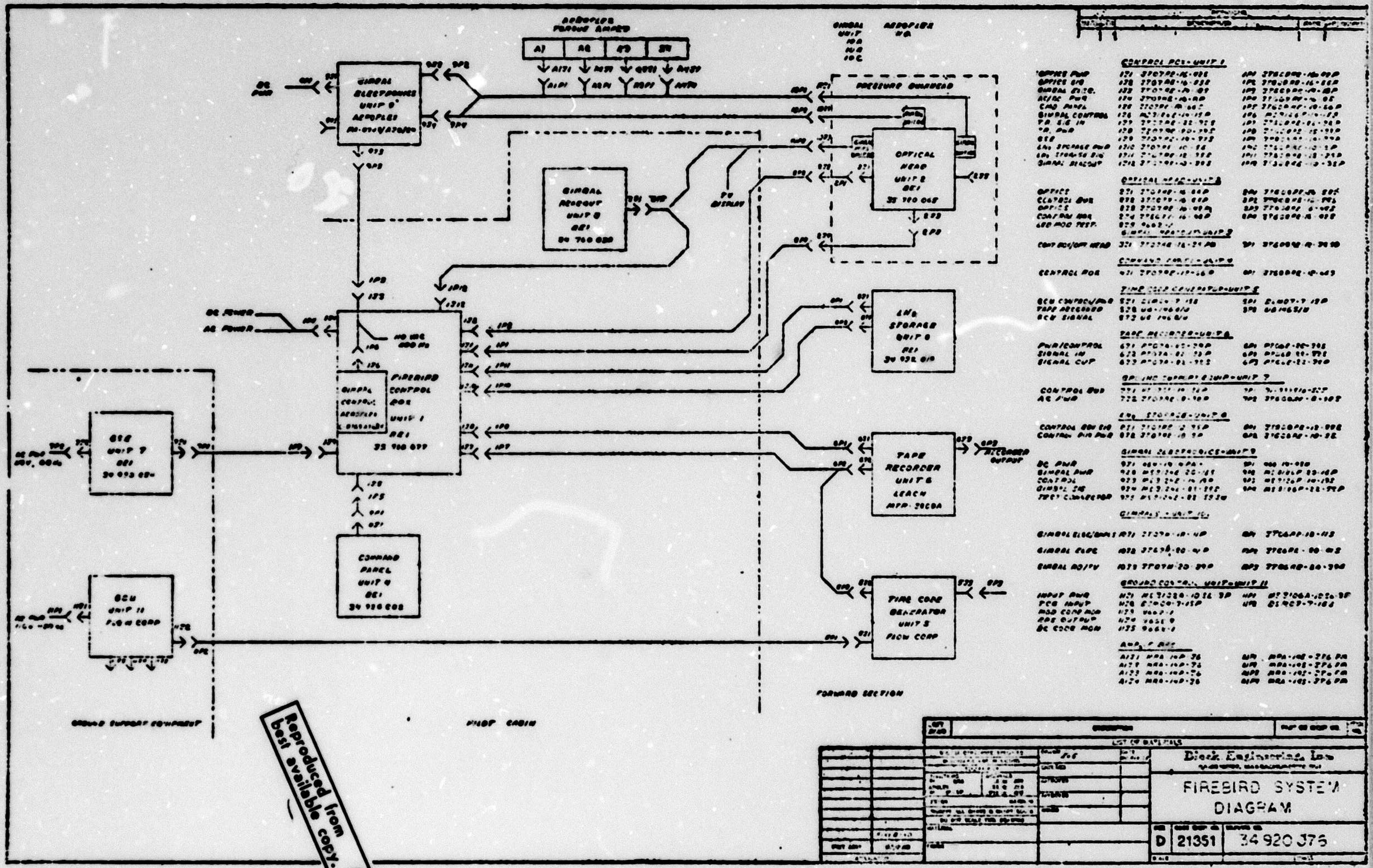

FIGURE 1 - FIREBIRD SYSTEM DIAGRAM

Cooled Telescope

The foreoptics design employs a liquid nitrogen cooled cassegrain telescope with a 7 inch primary optic. The cassegrain approach was selected due to the physical size limitations and stringent cooling requirements placed on the telescope assembly. The limitations on physical size result from aerodynamic considerations of the U-2 aircraft. The strict cooling requirements arise from the significant improvement in system sensitivity realized with the system optics cooled to liquid nitrogen temperatures. Cooling the optics to 77°K reduces photon noise due to the optical elements below intrinsic detector-preamplifier noise. The remaining background signal will then come from atmospheric radiation. A plot showing the broadband radiation of the atmosphere at 60K ft and the radiation of a cooled telescope is shown in Figure 2.

The atmosphere values are based upon measurements by Murcray and the telescope values are based upon considering the telescope as a black body at 100°K with an emittance of 0.5. As can be seen from this plot, the atmosphere is the dominant source of radiation with the possible exception of the window region around 11 microns. In addition to low temperature instrument operation, the sensitivity of the system is further improved by limiting the telescope field of view, thereby reducing the throughput energy to the detector. The extent to which this concept is implemented was limited by the precision of the stabilized tracking system as well as the relative uncertainty as to the true angular extent of the target. Based on these parameters, the telescope full angle field of view was designed for 8.7 mr resulting in a system throughput of 1.5×10^{-2} cm^2-sr.

Mechanically, the telescope assembly consists of a double wall housing with a retractable door mechanism covering the entrance. The door assembly allows the internal telescope components to cool to cryogenic temperatures without external

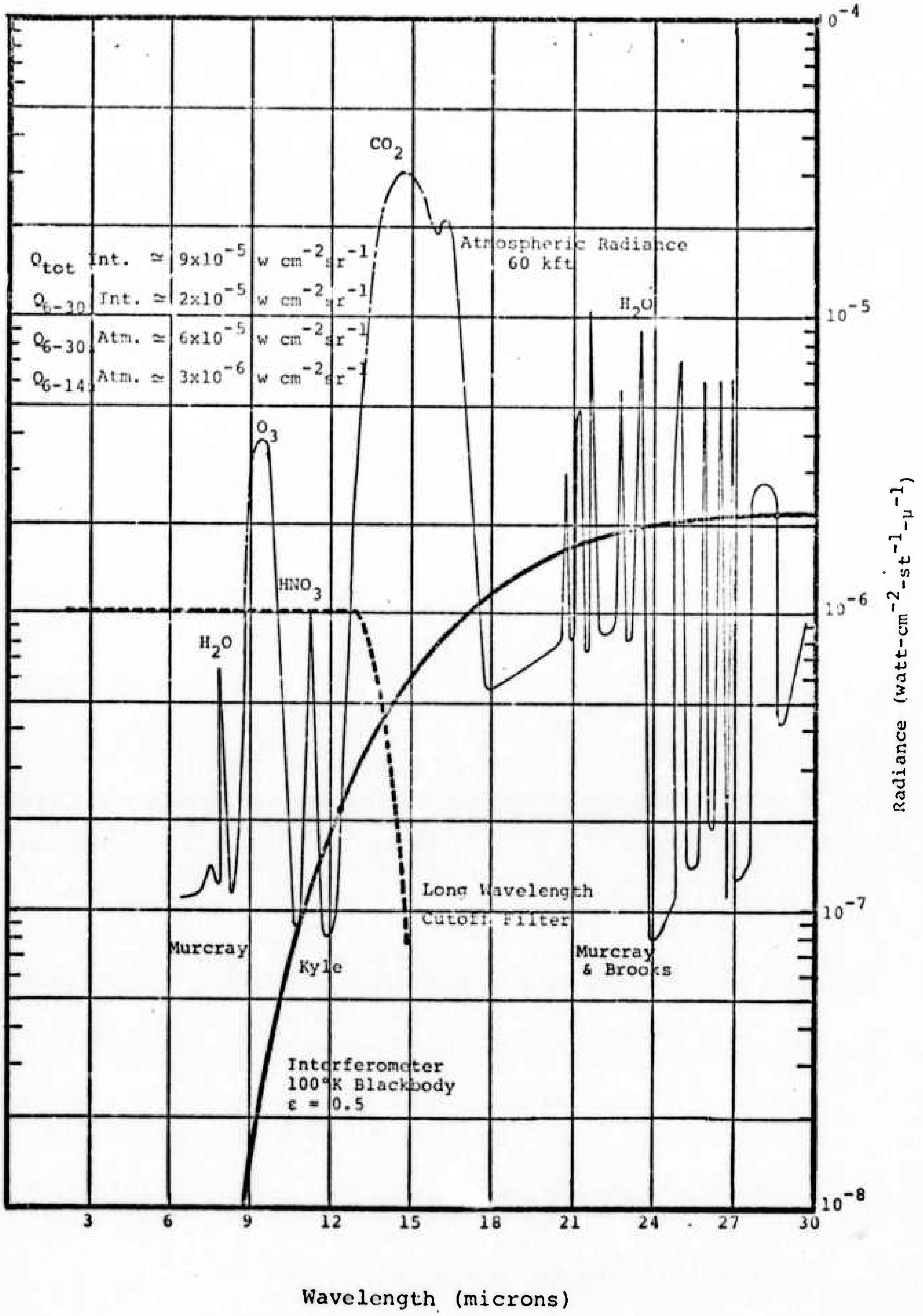

FIGURE 2 - ATMOSPHERIC RADIANCE

ambient-water vapor conditions affecting system operation. The door position is controlled by the observer via the system control panel.

The telescope is cooled by liquid nitrogen flowing through cryopanels attached to the telescope wall. The cooling loop also extends behind each optical element, conductively cooling both the secondary and primary surfaces to below 90°K. In addition to conductive cooling, the telescope cryosystem provides convective heat transfer via gaseous nitrogen exhausted through vents located above the primary mirror surface. The GN_2 is generated within the spectrometer housing by design, principally to maintain a dry atmosphere within the telescope by creating a slight positive pressure within the housing. The gas is exhausted to ambient via a baffle system at the telescope entrance, see Figure 3. The baffle system was designed to vent the gaseous equivalent of 15 LN_2 liters/hr in a laminar flow, operating primarily as an antifrost device. Optically, the baffle arrangement with its sequence of periodic precision drilled holes produces a small but detectable blurring of the image on the system field defining aperture due to diffraction. The net result is a blurring of the field of view from 8.7 mr to approximately 10.7 mr full angle. An analysis of this consequence during the program design phase indicated that the baffle approach did not adversely effect system sensitivity to any significant degree.

Cryogenic Interferometer

The Firebird interferometer sensor head contains the main or "signal" interferometer and integral transducer assembly, the reference interferometer system, the detector/He dewar unit, the internal calibration source and filter assemblies, and several key temperature monitoring and control devices.

The interferometers used in this instrument are of the conventional Michelson design, utilizing the phenomenon of interference to produce a spectrally encoded signature of the input energy referred to as an interferogram. The recovery of

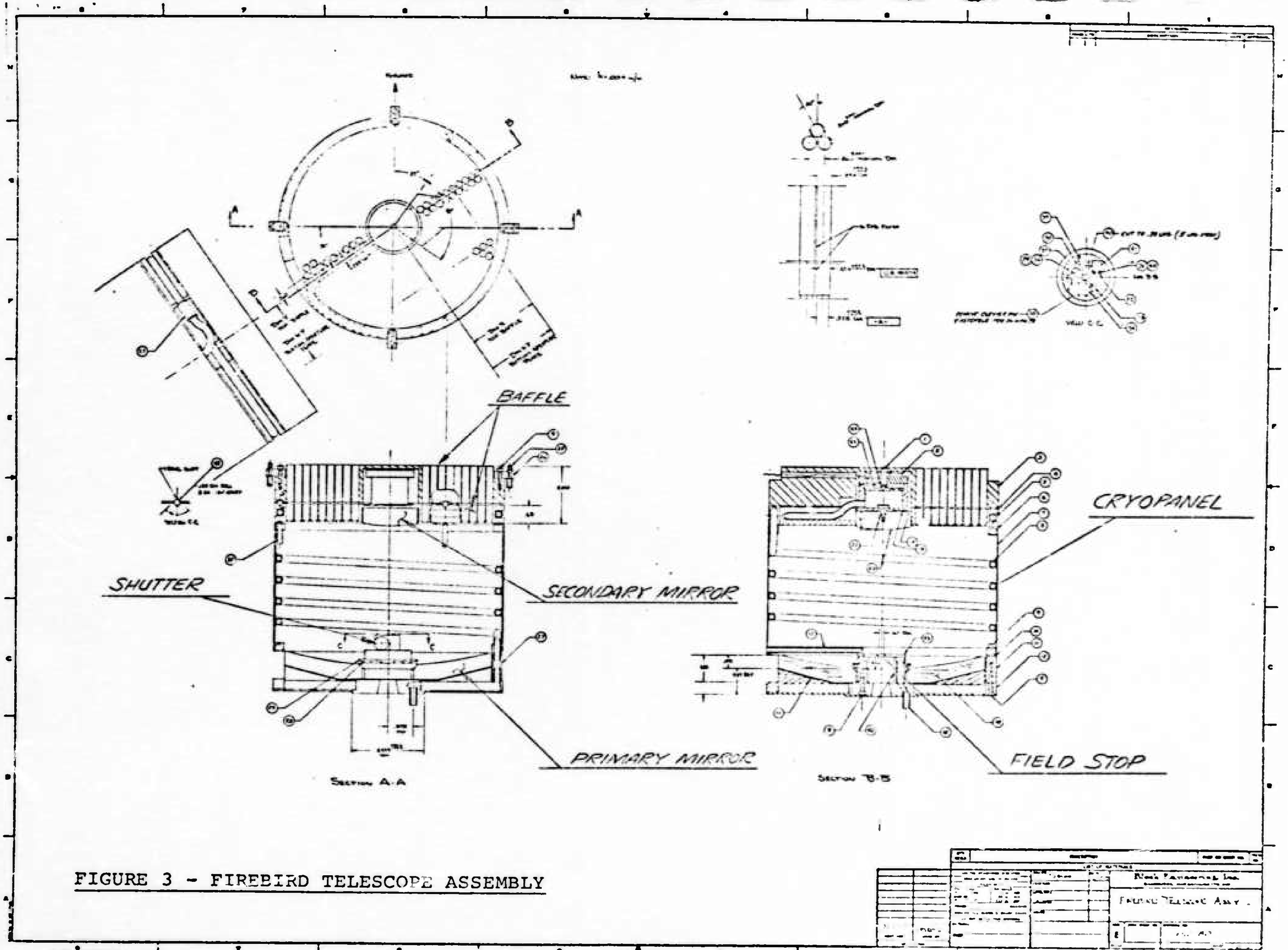

FIGURE 3 - FIREBIRD TELESCOPE ASSEMBLY

the spectral information is obtained by performing a Fourier transform on the resulting signal which may be thought of as a simple harmonic analysis of the interferogram.

Figure 4 contains a layout view of the cryogenic interferometer spectrometer and its associated hardware. In this view the reference laser is not shown since it is mounted behind the reference cube assembly. The reference laser tube is thermally stabilized via several layers of super insulating material to prevent detuning due to excessive temperature gradients.

To achieve 0.5 cm^{-1} spectral resolution, a one sided interferogram with a 1 cm maximum path difference between the reflected and transmitted rays is required. Additional resolutions of 1,8, and 32 are provided by varying the displacement of the moving mirror accordingly. Implementation of the multiple resolution feature is accomplished through a digital circuitry.

Spectral coverage to 14 microns is assured by the use of germanium optics and a germanium beamsplitter as well as an arsenic doped silicon detector.

Accurate information concerning the position and velocity of the moving mirror is provided through the "reference" interferometer assembly. The designation "reference" comes about since this interferometer measures the instantaneous displacement of the moving mirror with respect to a reference position. The reference interferometer uses both a tungsten lamp and a HeNe laser as its light sources and employs a solid cubical beamsplitter with an internal partially silvered surface as the beamsplitting element. Due to the precision required of the interferometer in various operating attitudes, corner cubes (which are unaffected by tilt or wobble) are used in place of plane mirrors as the reflective elements. Separate detectors are used for the white light and laser signal detection. The two source two detector approach is an attractive feature because the white light signal marks the reference position, while the laser signal is used independently to servo control the moving mirror velocity.

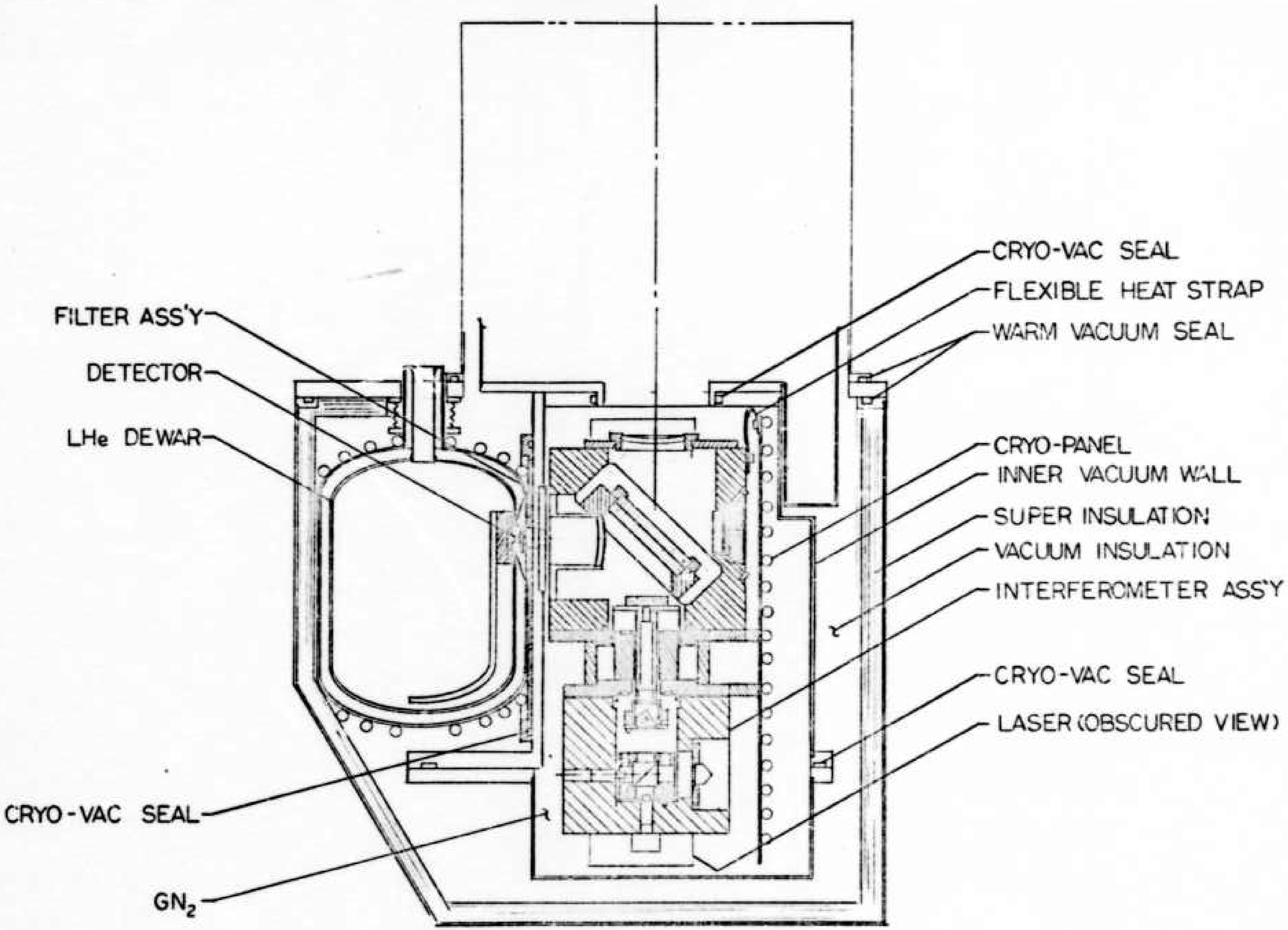

FIGURE 4 - FIREBIRD INSTRUMENT ASSEMBLY

The design of the bearing and transducer assembly which supports the moving mirror in the signal interferometer and the moving corner cube in the reference interferometer was the object of a considerable amount of effort during the design and development phases of the program.

The bearing and transducer assembly consists of the two moving optical elements attached to an inner glass bearing, a coil also attached to the inner bearing, and an outer fixed glass bearing. The assembly as a unit is located within a field generated by a permanent magnet. Scanning is accomplished by applying the proper voltage waveform to the coil causing the assembly to move in manner similar to the voice coil moving in a loudspeaker assembly. To achieve the precise motion of the inner bearing, less than 10 arc seconds tilt over the entire stroke, requires that the bearing pieces be manufactured to extremely tight well controlled tolerances. This design requirement is satisfied by utilizing the two sections comprising a glass syringe as the bearing pieces. The clearance between the two matched bearing diameters using this technique has been measured as significantly less than .001." The problems encountered with the bearing development had a significant impact on the program direction and will be discussed in the section describing the development phase of the program.

As mentioned previously, the design of the signal interferometer incorporates an arsenic doped silicon (Si:As) detector cooled to 5°K providing photon noise limited performance down to very low background levels. This particular detector was manufactured by Aerojet-General Corporation, Irwindale, California. Parameters and characteristics of this detector as measured with a controlled narrow band radiation source are given in Figure 5. The reduced photon flux used here approximately corresponds to a liquid nitrogen temperature background of 77^{o}K.

Mounted on the liquid helium cooled surface in addition to the detector is a combination zinc sulfide-barium fluoride cold window which provides a significant improvement in spectral detectivity in the 5-14 micron region by reducing the background

FIGURE 5 - ARSENIC DOPED SILICON DETECTOR

Detector	Si:As, 7°K
Serial No.	7003
Diameter, cm	0.20
Surface Loss, η	0.68
Capacitance, C pf	<5
Test Frequency, f	1000
300°K Background	
Photon Flux(a) phot-sec^{-1}	5.39E+15
D* (10 μm, f,1) cm-Hz^{½}-w^{-1}	3.1E+10(c)
Reduced Background	
Photon Flux(a) phot-sec^{-1}	3.14E+11
D* (10 μm, f,1) cm-Hz^{½}-w^{-1}	4.0E+12(b)
NEP$_{10\ \mu m}$ w-Hz$^{-½}$	4.4E-14
NEP$_{10\ \mu m}$(q_e=1.0) w-Hz$^{-½}$	2.7E-14
Quantum Efficiency, q_e	0.38
Resistance, R_e ohms at 10V	7.7E+8

(a) Photon flux does not include surface loss.
(b) Measured quantities.
(c) Computed for Ge:Hg equivalent spectral response.

photon flux incident on the detector. Figure 6 illustrates the improvement in spectral detectivity utilizing the cold window, the background flux assumed for this calculation corresponds to a temperature of 80°K.

Additional filtering of the signal is provided by the 5 selectable filters mounted on a rotating wheel. This set of filters was designed to maintain the proper background flux corresponding to 80°K by reducing the strength of the strong atmospheric emitters in the spectral region of interest. The temperature of the filterwheel and hence that of the filter elements is maintained at 80°K, therefore, no real improvement in D* can be realized by this approach. However, they do serve a purpose by reducing any degradation in sensitivity due to the atmospheric emitters to a minimum by limiting the noise level from these bands to below the intrinsic detector noise.

One additional ancillary component located in the spectrometer assembly is the hot-wire calibration source which provides an internal reference of constant radiance against which the signal interferometer is aligned.

OPTICAL DESIGN

As mentioned previously, the optical system comprises a cryogenically cooled Cassegrain telescope assembly, including baffle system, shutter and field stop, and the signal interferometer. The optical layout for the instrument is shown in Figure 7. Figure 8 tabulates the pertinent system design numbers and dimensional relationships.

Energy enters the telescope through the cold baffle and is focused at the entrance field stop by the telescope optics. The energy is then collimated by the interferometer entrance lens into the interferometer signal cube, passes through the interferometer, is focused by the exit lens through the selectable filterwheel onto the exit field stop, proceeds to the field lens and is finally focused onto the detector.

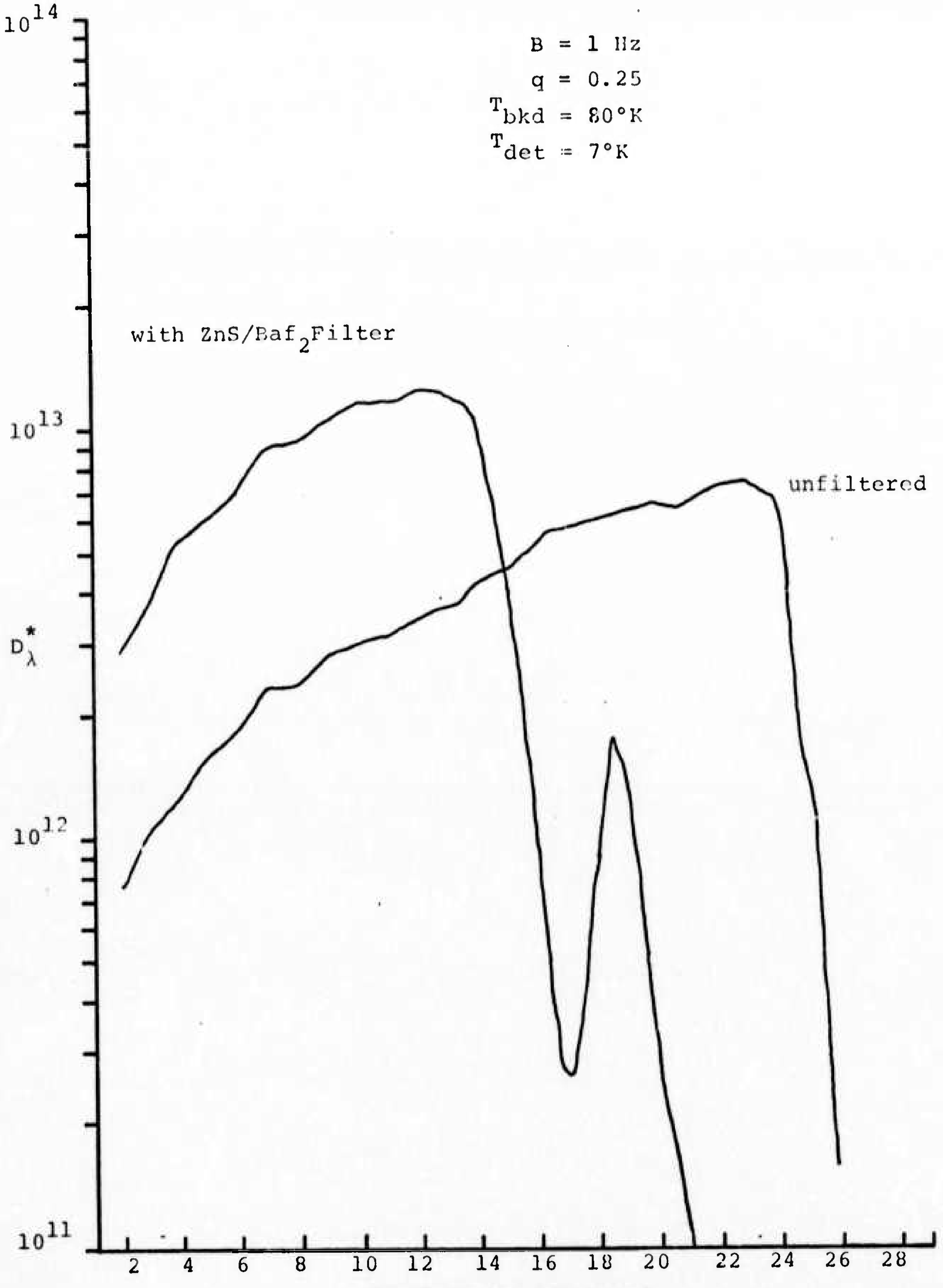

FIGURE 6 - SPECTRAL DETECTIVITY D^*_λ - ARSENIC-DOPED SILICON

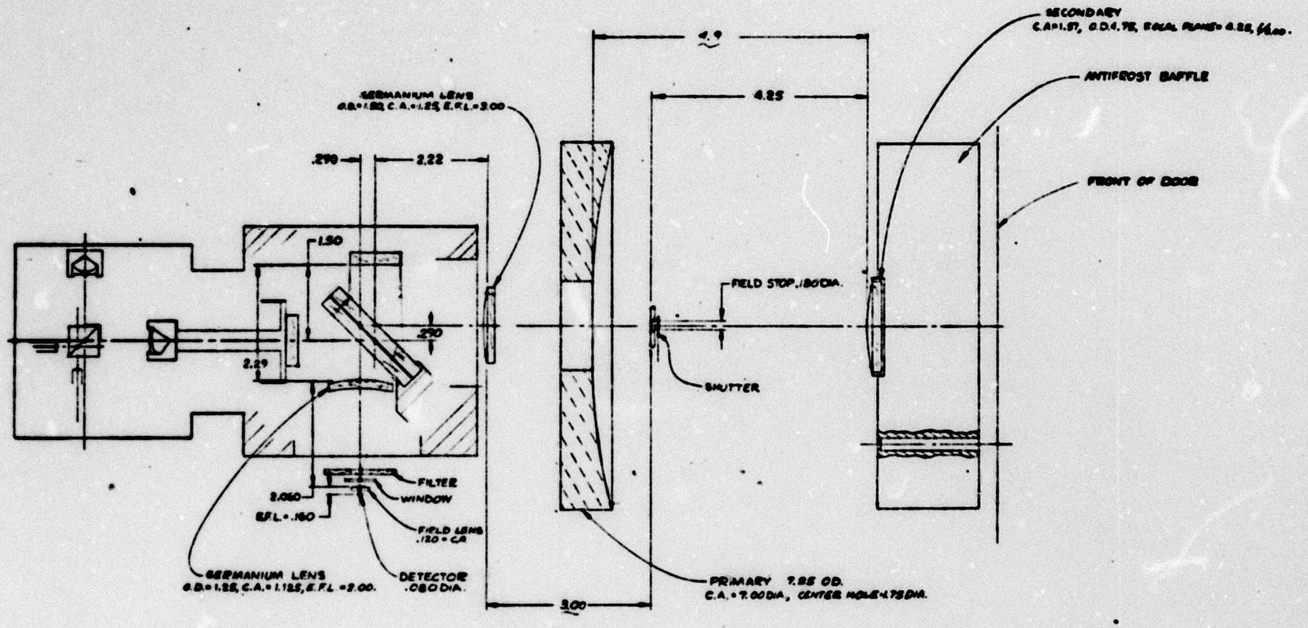

FIGURE 7 - FIREBIRD OPTICAL DIAGRAM

Element	Radius of Curvature	Distance to Next Surface	Clear Aperture Diameter	Material
Baffle	Infinite	-	7.0	Aluminum
Aperture Plate	Infinite	-	7.0	Aluminum
Telescope:				
Primary	Paraboloid	4.9	7.0	Stabilized 6061-T6 Aluminum
Secondary	Hyperboloid	4.25		
Field Stop	Infinite	3.2	0.165	Aluminum
Entrance Lens	3.954 2.700	0.166 2.10	1.25	Germanium
Beamsplitter/ Compensator	Infinite	1.500	1.800	Germanium
Fixed/Moving Mirror	Infinite	1.500	1.00	Quartz
Beamsplitter/ Compensator	Infinite	1.00	1.800	Germanium
Exit Lens	2.998 2.000	0.166 1.70	1.125	Germanium
Filter	Infinite Infinite	0.100 0.200	1.00	Selectable, see list Sect. 3.7.2
Window	Infinite Infinite	0.050 0.100	0.500	Irtran II
Field Lens.	0.395 0.401	0.075 0.075	0.120	Germanium
Detector	Infinite	-	0.080	Si:As

(All dimensions in inches)

FIGURE 8 - OPTICAL SYSTEM PARAMETERS

CRYOGENIC COOLING SYSTEM

The Cryogenic Cooling System contains a 33 liter liquid nitrogen supply vessel, a vacuum insulated transfer line, and the sensor head cryopanels. The system was designed to satisfy the cooling requirements of the optical sensor head for an operating period in excess of six hours.

The LN_2 storage vessal was manufactured by Cryogenic Associates, Inc. to BEI specifications. The dewar consists of a vacuum insulated double wall enclosure with a single access which functions as both an input and output port via the mating vacuum transfer line. Heater elements located inside the vessel insure that a positive pressure can be developed to induce LN_2 flow to the sensor head. In addition, level indicators and pressure sensors are provided as override control devices which regulate power applied to the heaters in the event the level drops too low or the pressure developed in the vessel exceeds a preset operator determined threshold.

The sensor cooling loop design utilizes conductive cooling to maintain all telescope and interferometer components near liquid nitrogen temperatures. A plenum chamber located within the sensor head housing receives the liquid nitrogen via the supply vessel transfer line. Internal heater elements located within the instrument plenum chamber develop gaseous nitrogen which is vented into the interferometer compartment to insure a dry atmosphere. This cold GN_2 exits through the telescope baffle assembly as indicated earlier.

A second branch of the cooling loop supplies the telescope assembly with liquid nitrogen via a control valve located in the interferometer chamber.

Control of the cooling system is accomplished through liquid sense elements located at strategic points within the loop. For example, as the telescope cryopanel fills with liquid nitrogen it contacts a liquid sense carbon resistor positioned behind the secondary mirror element, resulting in a dramatic increase in resistance which exceeds a certain preset threshold level. Once the threshold is exceeded the control valve in the loop is closed. As the liquid recedes, the threshold is crossed in the reverse direction activating the valve and completing the cycle.

Figure 9 reveals a schematic view of the Firebird cooling system. An added feature of the design is the capability of operating the system with the door mechanism closed via check valves located in the door panels allowing the gaseous nitrogen to vent.

CONTROL ELECTRONICS

The measurement system electronics control the operation of the interferometer, LN_2 storage vessel, and the telescope door mechanism as well as the tape recorder and gimbal mount. The circuitry is arranged on printed circuit cards according to control functions, see Figure 10.

One important function of the electronics assembly is to process the signals generated by the spectrometer for storage on magnetic tape. The design of the circuitry to accomplish this task utilizes a technique called gain ranging which enables the full dynamic range capabilities of the tape recorder to be utilized during the recording of the interferogram. In essence the large fringes around the center of the interferogram are reduced in amplitude by a factor of eight, thereby, effectively increasing the dynamic range of the tape recorder by the same amount. This feature is particularly valuable for high resolution spectra where a good signal to noise ratio is necessary. Figure 11 shows the improved performance provided by the application of gain ranging.

Control/display panel functions are divided into four sections, each section having a specific functional authority. A GSE/analysis panel, see Figure 12, contains signal access connections, a digital voltmeter and an oscilloscope which together will display all instrument parameters. It is primarily a preflight adjustment and condition verification aid. This panel is connected to the main electronics chasis via a connector terminated cable, and is not hard mounted to the aircraft.

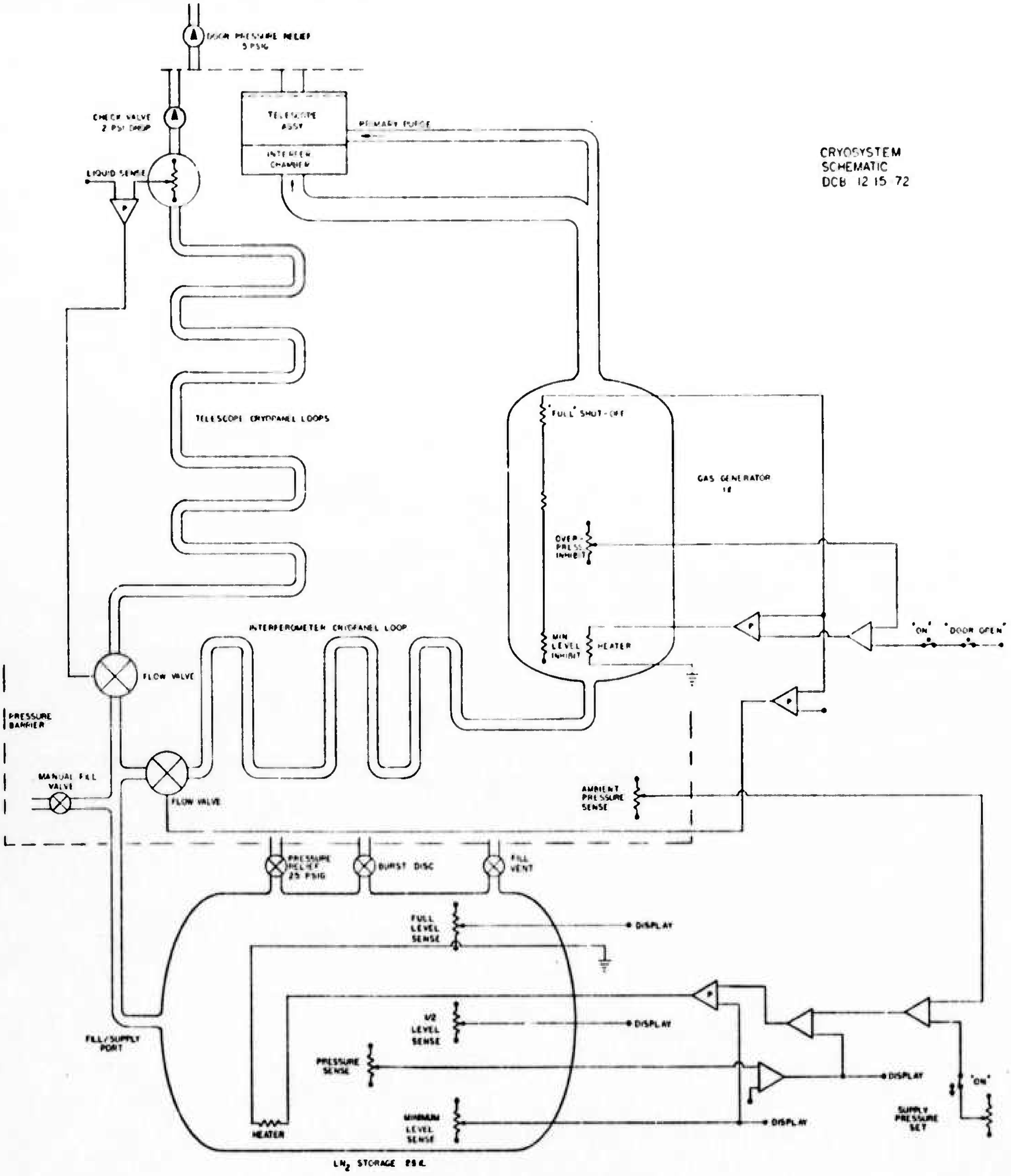

FIGURE 9 - CRYOSYSTEM SCHEMATIC

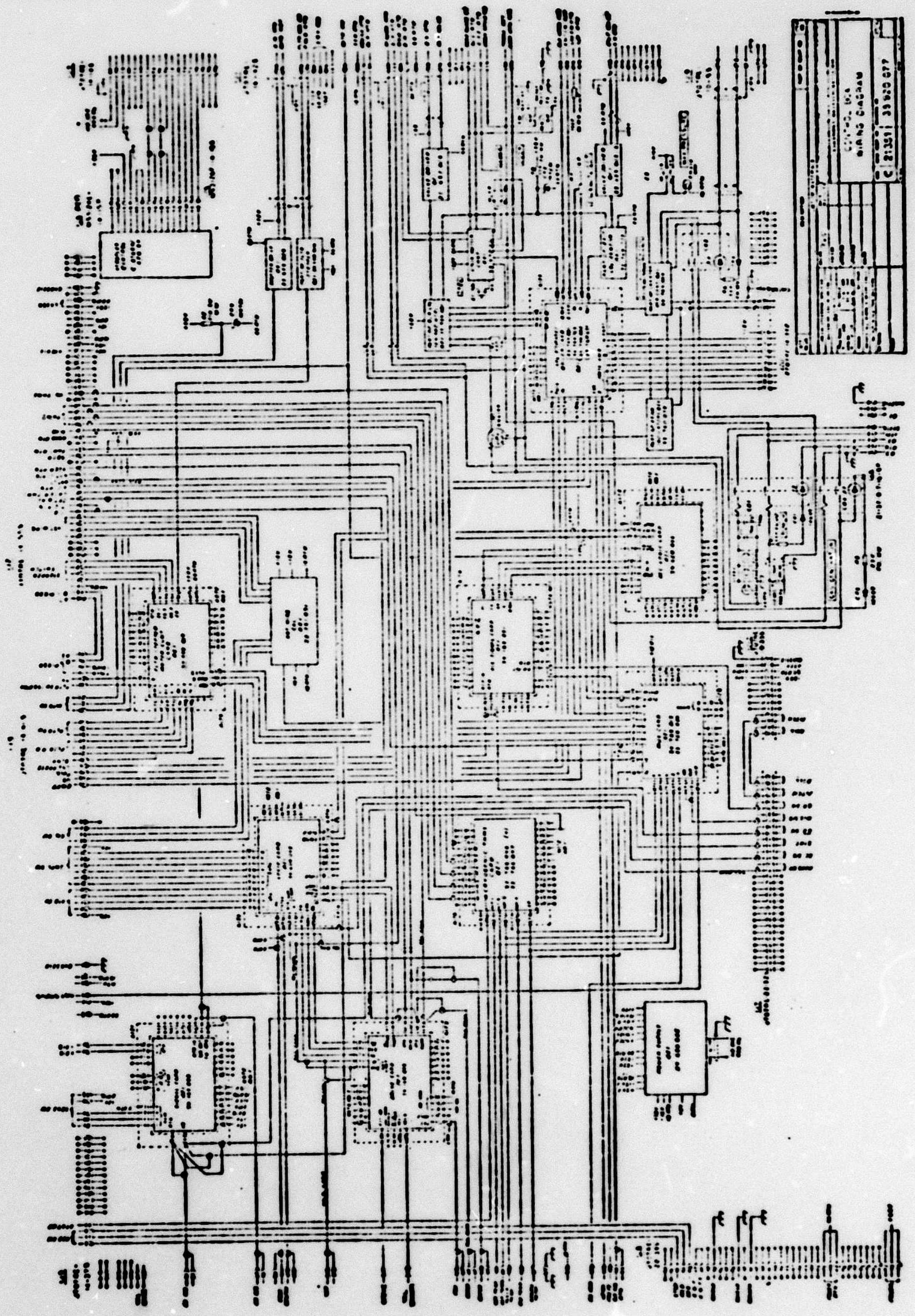

FIGURE 10 - CONTROL BOX WIRING DIAGRAM

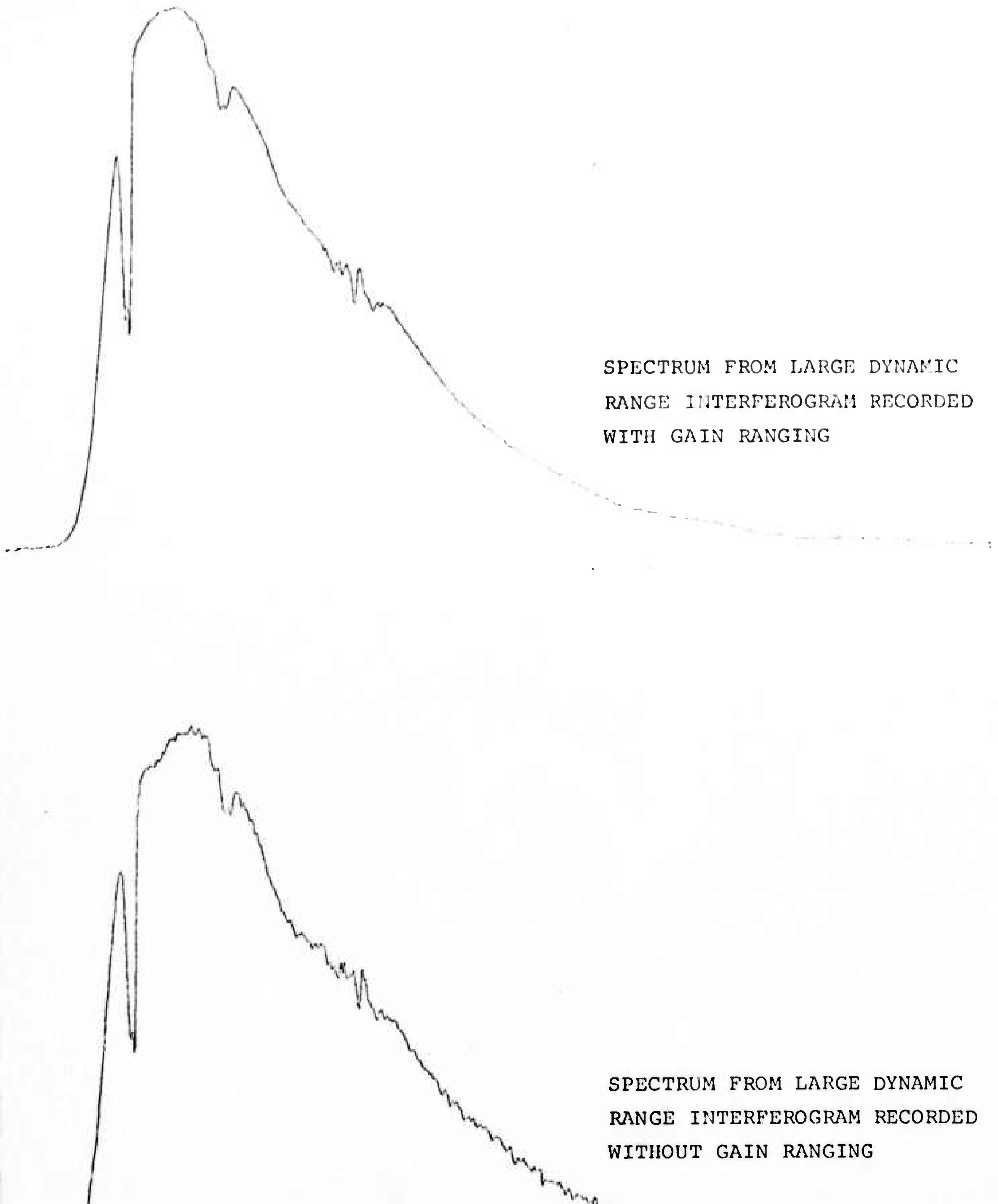

SPECTRUM FROM LARGE DYNAMIC
RANGE INTERFEROGRAM RECORDED
WITH GAIN RANGING

SPECTRUM FROM LARGE DYNAMIC
RANGE INTERFEROGRAM RECORDED
WITHOUT GAIN RANGING

FIGURE 11 - IMPROVEMENTS WITH GAIN RANGING

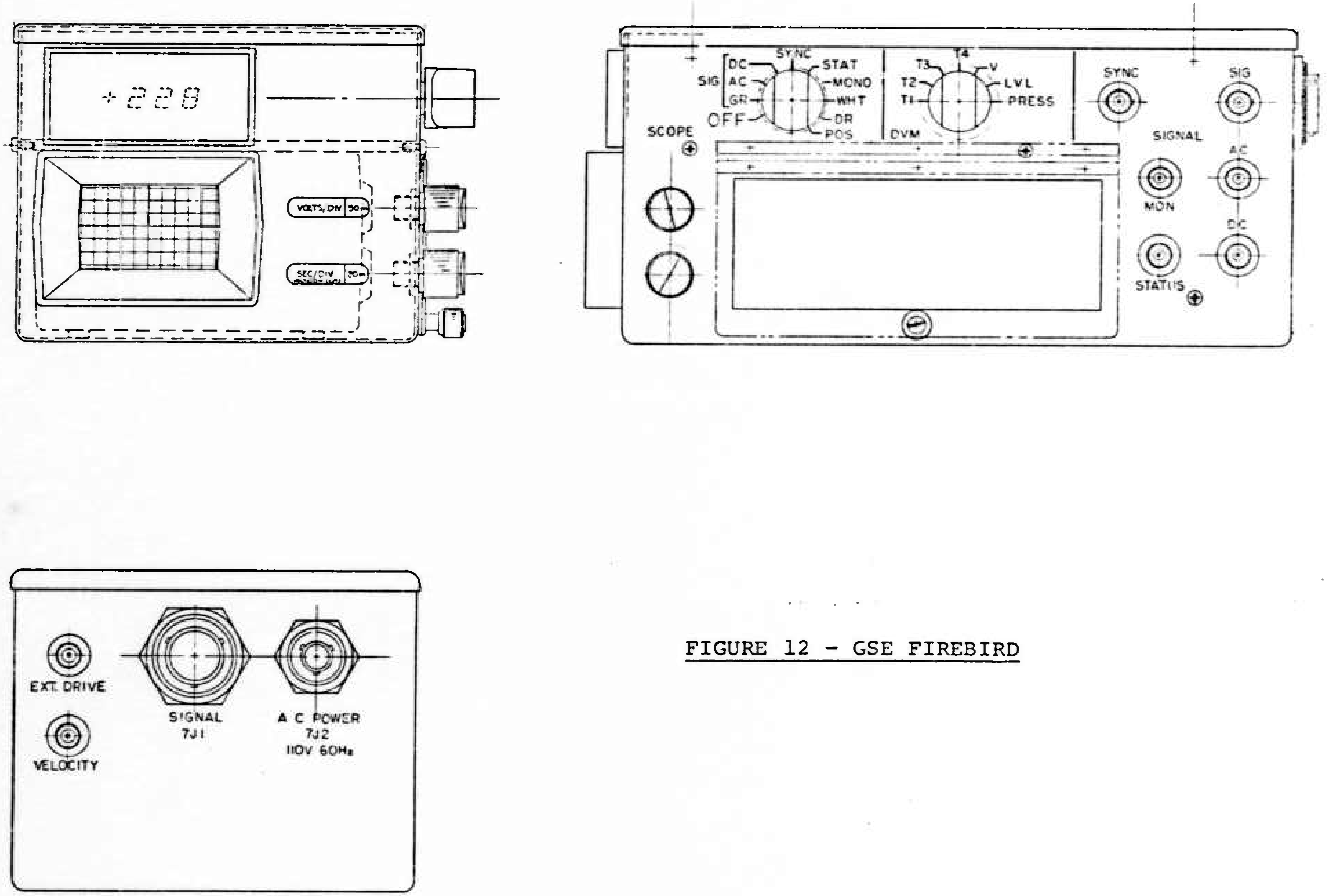

FIGURE 12 - GSE FIREBIRD

The normal operational and control functions for the system are divided among the three remaining panels. Each of these panels is permanently hard mounted to the aircraft. The first panel contains controls not required during the time just prior to data acquisition, see Figure 13. These controls include main power, heater controls, and telescope door controls. The panel is an integral part of the electronic control chassis.

The gimbal pitch and roll readouts are digital displays, reading directly to 0.1 degree. The readouts are located on the T.V. console, Figure 14.

The fourth panel, Figure 15 contains spectrometer and tape recorder controls as well as several key status indicating lights. The panel controls are protected from accidental actuation by a hinged transparent door which allows visual observation of their status.

2.3.2 Pointing System

The pointing system consists of the stabilized spectrometer mount, the gimbal electronics, the joystick control unit, and the pressure bulkhead. The tracking mount subsystem provides servo controlled pitch and roll stabilization of the sensor under all conditions of aircraft flight within the range of the subsystem's freedom of movement.

The mount consists of the frame assembly, the pitch gimbal assembly, and the roll trunnion assembly. Gimbal rate information is provided by associated pitch and roll resolvers and potentiometers. In addition, position potentiometers relay specific pitch and roll angular information to the gimbal readout display. The gimbal system has sufficient angular rotational freedom to provide the required ±30° of pitch excursion (at 0° roll) and ±10° of roll excursion (at 0° pitch) about local zenith. Spring loaded cushion stops at angular rotations in excess of required excursion angles are provided on each axis to prevent the hardware from contacting the mounting bulkhead.

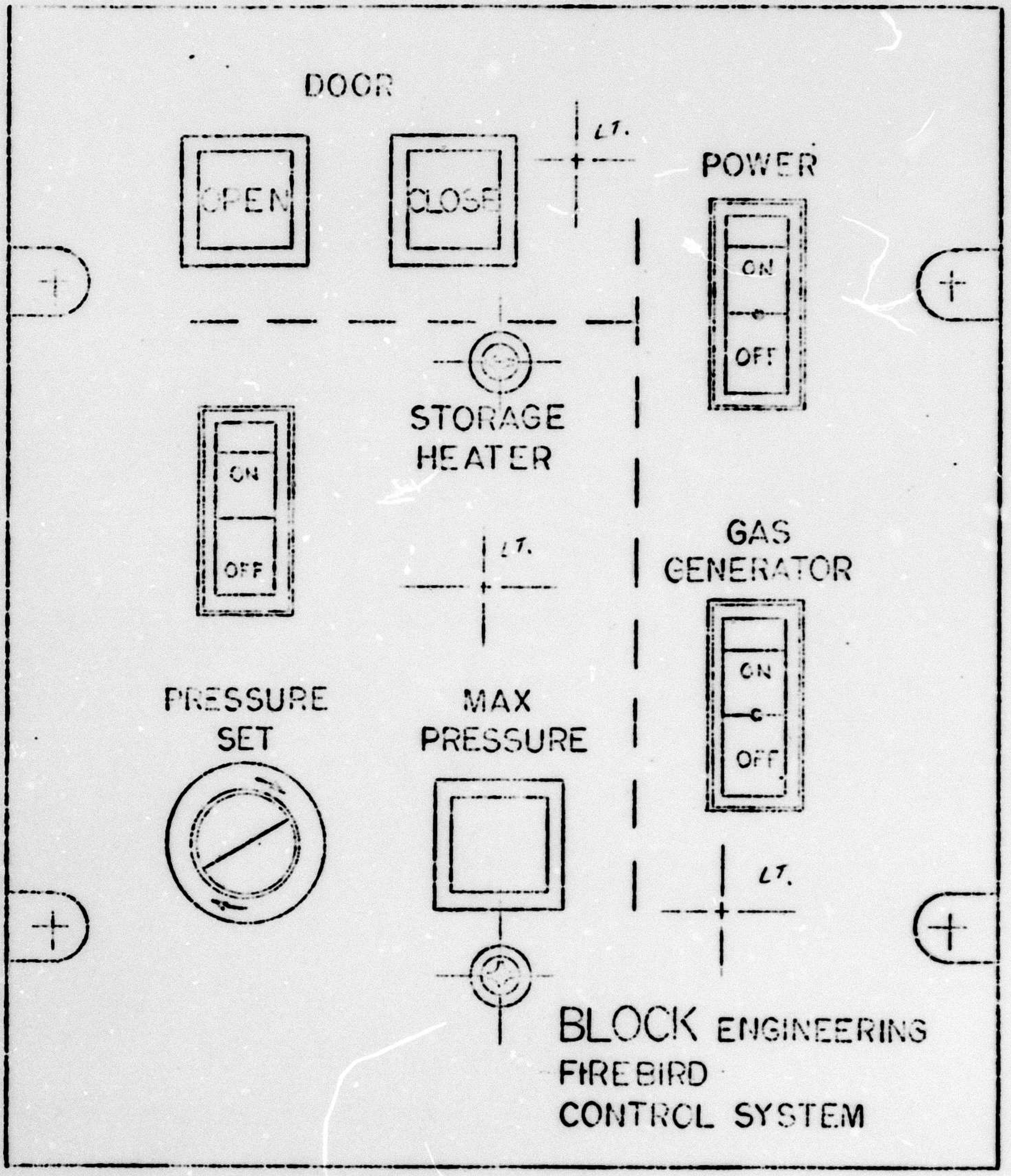

FIGURE 13 - FLIGHT CONTROLLER

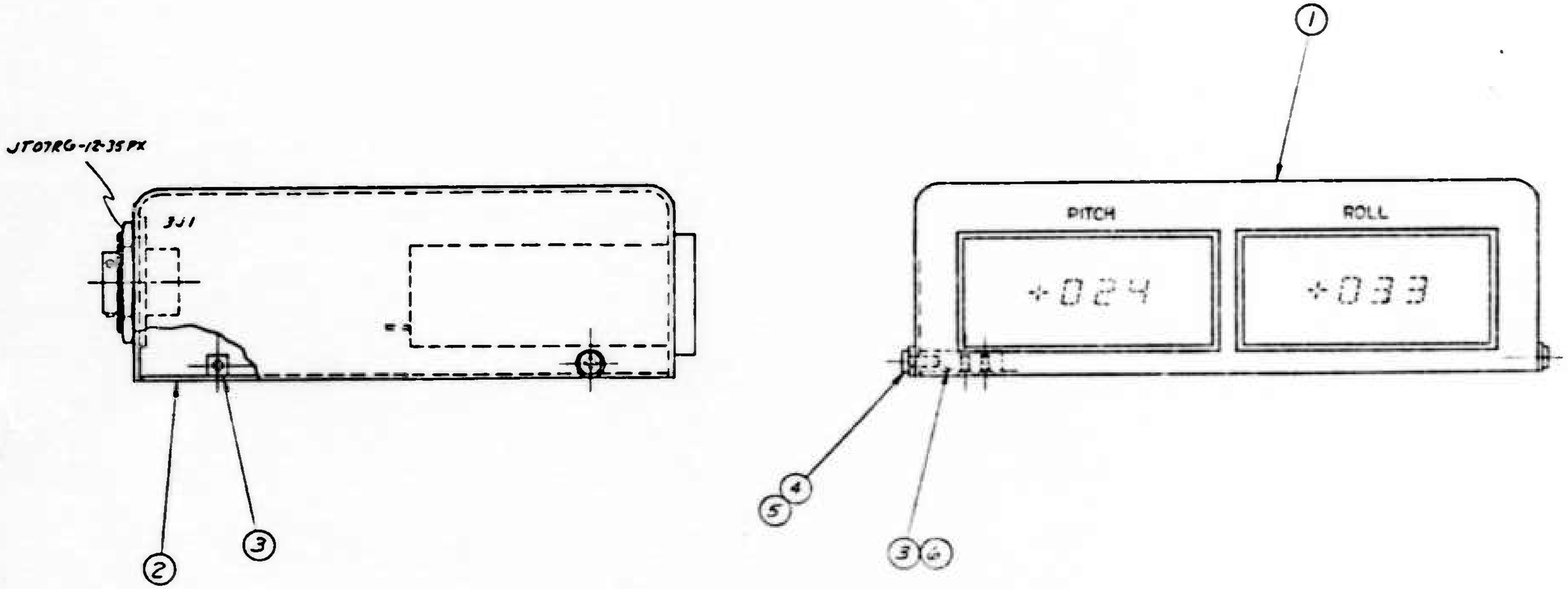

FIGURE 14 - PITCH AND ROLL READOUT

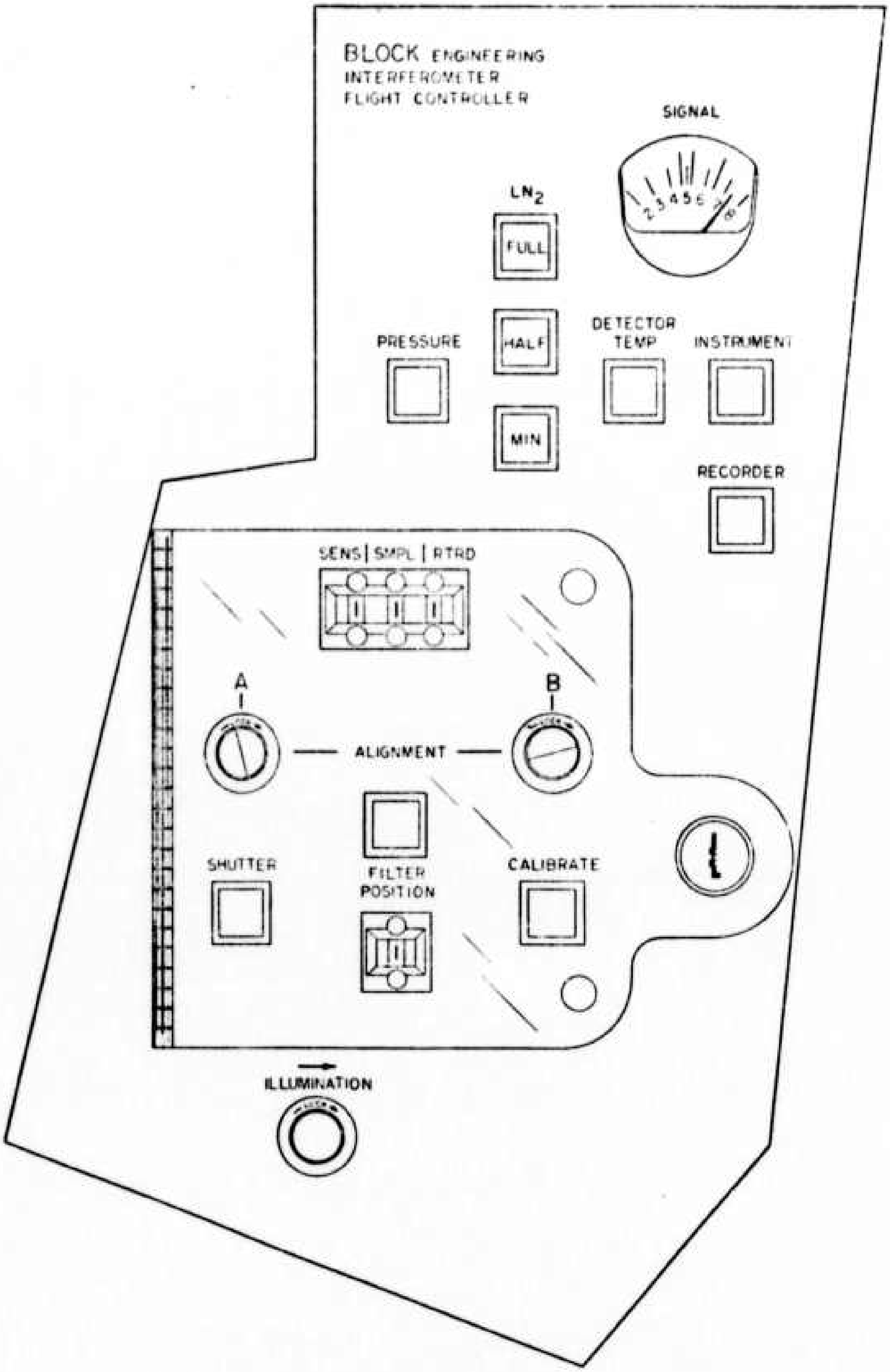

FIGURE 15 - INTERFEROMETER CONTROLLER

The joystick control unit contains a 2-axis "stiff stick" type thumb operated hand control, and two dual separate adjustable controls for drift and sensitivity. The manual controller provides rate commands to each of the pitch and roll gimbal servos as directed by the thumb operated hand control. The unit is an integral component of the measurement system control chassis.

The pressure bulkhead in which the gimbal mount/spectrometer assembly is located is shown in Figure 16. The bulkhead ensures that the rear observer is able to operate in a 4.6 psi ambient.

2.3.3 Recording System

The recording system consists of a Leach Corp Model 3200A primary magnetic tape recorder and a Datum, Inc. Model 9200 time code generator with XR3 time format, both items furnished by AFAL. The 3200A is a 14 track record/reproduce system with extended bandwidth capability. In addition, channels requiring DC response characteristics, e.g. pitch angle, multiplex diagnostics, etc. have been converted to FM operation to provide the necessary frequency response to the recording system. The recorder has been set up to record at 15 i.p.s. providing DC-5 KHz response on FM channels and a response of 300 Hz - 62.5 KHz on all AM channels.

The time code generator provides a time reference to all recorded events to facilitate analysis of the data. The generator output is recorded on one AM channel of the primary tape recorder.

2.3.4 Data Processing System

The Data Processing System (DPS) consists of all hardware and software required to collect data from the interferometer spectrometer either directly or via analog magnetic tape, reduce the data to absolute spectral terms and record the data on digital magnetic tape. In addition, to digital magnetic tape,

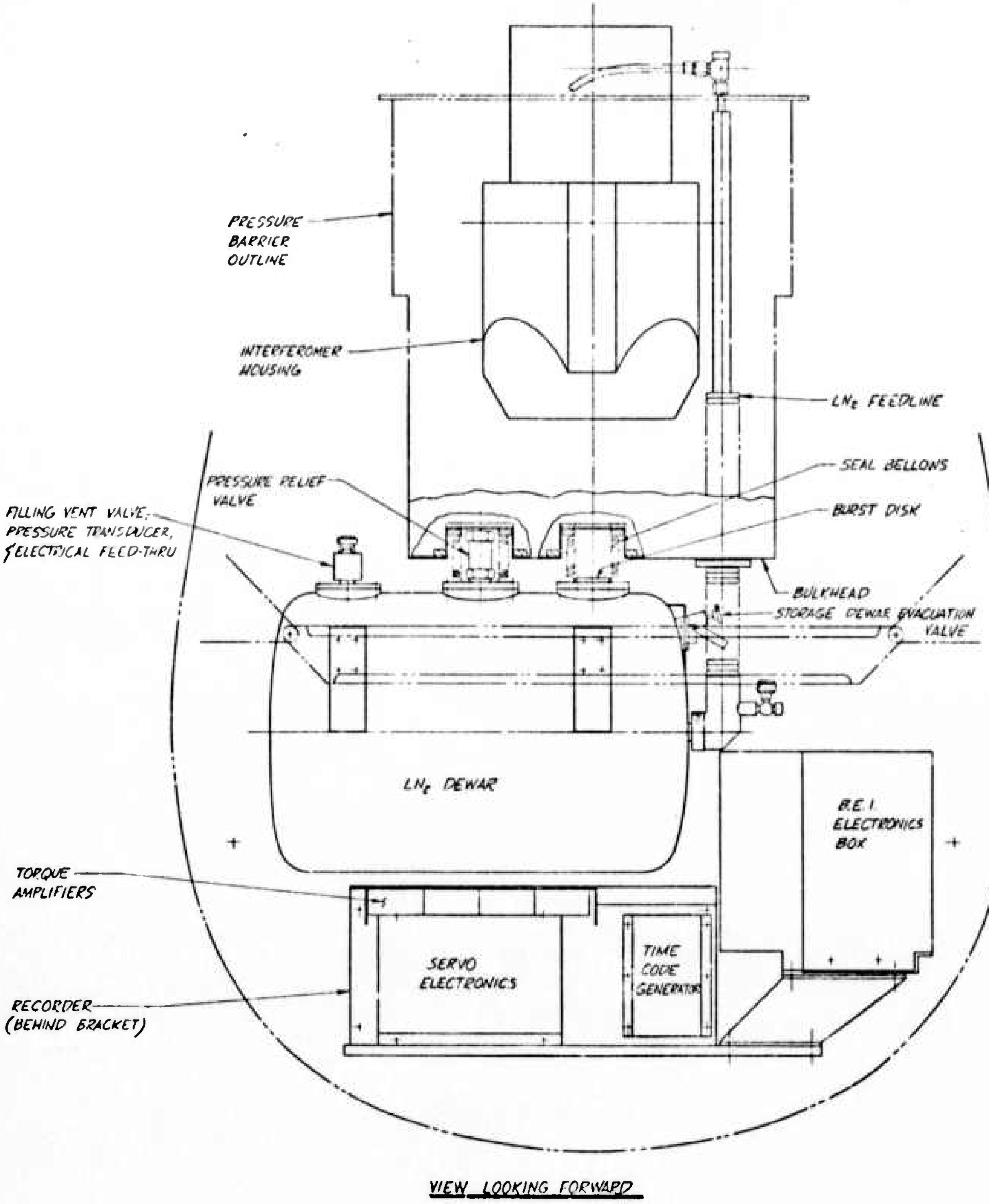

FIGURE 16 - EQUIPMENT LOCATIONS

the data may be plotted on a digital plotter or displayed on a CRO. Data communication between the DPS and the WPAFB CDC6600 computer is via digital magnetic tape.

The DPS is based on a Digilab, Inc. DL-100 data system which has been modified and expanded to meet the requirements of the program. The system is outlined in Figure 17. It consists of a DT512B interface, a Digilab generalized I/O, a Data General NOVA 1200 with 8K of core memory, a time code reader, a digital plotter, a Kennedy Model 9000, 9 track, 37.5 ips, 800 bpi digital magnetic tape unit, a 128K magnetic disk memory unit, an ASR 33 teletype and a CRO display interface.

The DT512B is a signal conditioning interface which generates the appropriate clock and status signals for the computer from the interferometer "sync" signal. The unit will accept signals either as recorded on tape or directly out of the spectrometer for on-line operation.

The Digilab I/O includes a hardware multiply/divide, a 15 bit 20 KHz A/D converter with data channel add to memory, and the interfaces for the digital plotter and CRO display.

The computer is a Data General Corp. NOVA 1200. This minicomputer is only 5.25 inches high and makes extensive use of medium scale integrated circuitry. 8K 16 bit words of core memory is supplied with the computer which is slide mountable in standard nineteen inch racks.

The DPS primary means of communication with operator -- both input and output -- is through a Model 33 ASR teletype. This unit is comprised of a keyboard, printer, paper tape punch, and paper tape reader, all operable at speeds up to ten characters per second. Additional peripheral equipment includes a CRO display interface built into the Digilab I/O which supplies all the signals required for data display on a CRO. The CRO itself is GFE.

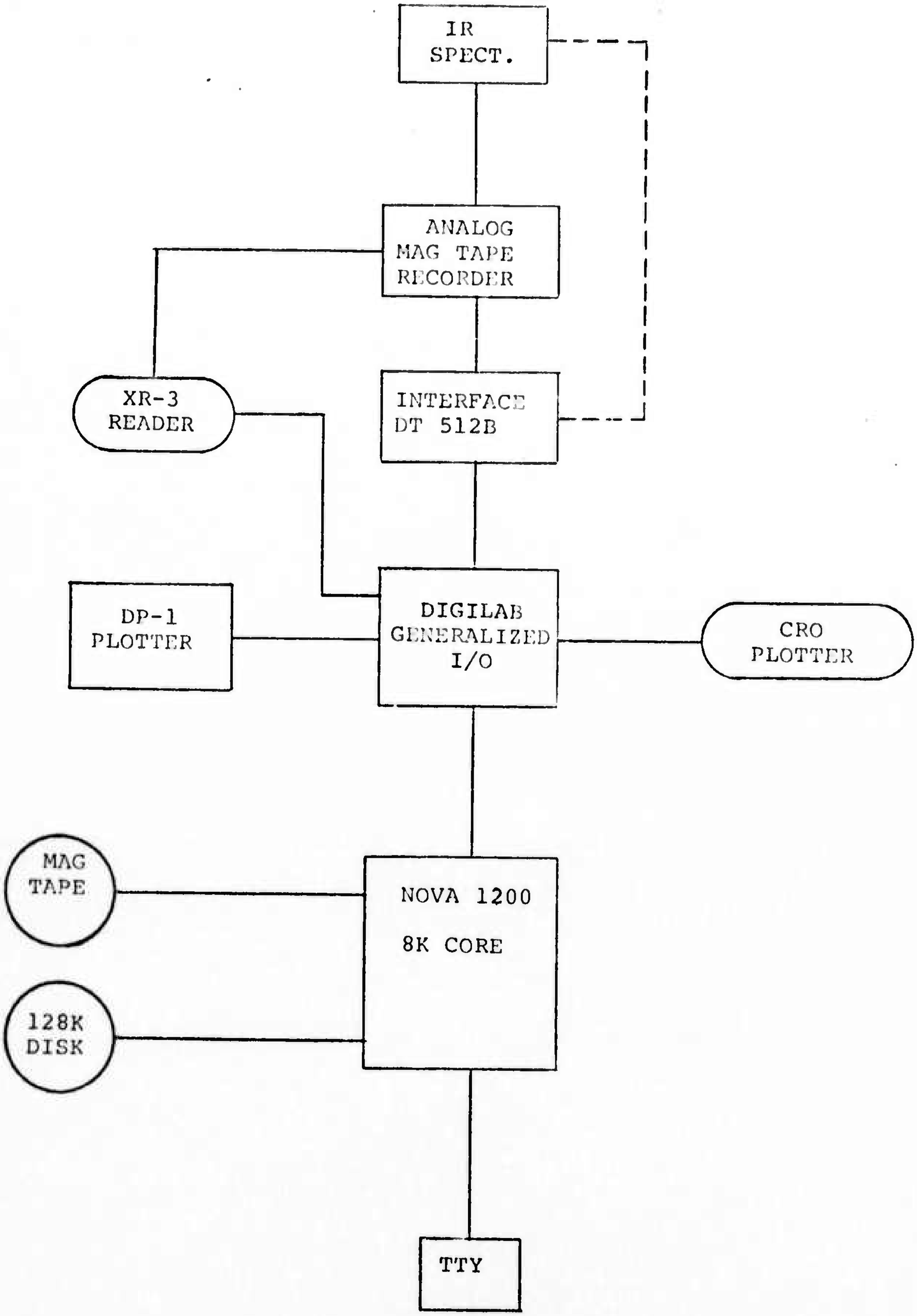

FIGURE 17 - GROUND BASED DATA SYSTEM

The digital plotter supplied with the DPS is a Houston Instrument Model DP-1 which uses standard 11 x 8.5 inch fanfold paper. The plotting speed is 300 steps per second and the step size is 0.005 inch.

A magnetic disk memory is included with the DPS. The disk has a storage capacity of 128K 16 bit words. This provides all of the non-core random access storage required for programs and data. The disk rotates at 3600 RPM, has an average latency time of 8.3 milliseconds and an average transfer rate of 57 KHz.

The magnetic tape system consists of one Kennedy Model 9000 drive complete with controller and interface. The system has full read/write capability operating at 37.5 inches per second. The recorder has 9 tracks and utilizes standard .5 inch wide 1.5 mil thick computer grade magnetic tape.

An XR-3 time code reader with digital output is employed in the DPS. Under program control, each scan collected by the DPS is labeled with its start and end time. These times are time of day in seconds (GMT) to the nearest millisecond. If several scans are summed, the composite scan will be labelled with the start time of the first and the end time of the last.

Data collection software includes collection of single or summed scans and storing them for later reduction. Successive scans may be summed real time (co-added). Any number of scans may be co-added with the limitation that the summation may not exceed the 16 bit dynamic range imposed by the 16 bit word length of the computer. The number of scans to be co-added is a variable (parameter) which is set by the operator using the teletype. The resulting single or composite scan is then stored on either a disk or magnetic tape file (or both). Addition and subtraction of interferograms or spectra stored on disk files is also available under user instruction. Thus signal averaging in either interferogram or spectrum space is possible.

Upon command, an apodized, fully phase corrected fast Fourier transform (FFT) is performed on an interferogram to produce an amplitude spectrum and a phase spectrum. Up to 8192 points per spectrum are calculated.

Data files may be added, subtracted, multiplied or ratioed upon command and each file may be multiplied by a scale factor. all without loss of data in the original files. Using these facilities, a target plus background spectrum may be corrected for background by subtracting a background spectrum. Likewise, a spectrum may be corrected for atmospheric transmission by dividing it by the appropriate atmospheric transmission spectrum. The atmospheric transmission spectrum for a given range and orientation may be input to the DPS via magnetic tape from CDC 6600.

SECTION III

PROCUREMENT

3.0 General

Since virtually all of the components used in the fabrication of the Firebird system were purchased from outside vendors, a major portion of the early program effort was involved with procurement. This effort required and received the close cooperation and coordination of the Engineering, Quality Assurance and Reliability, and Purchasing Departments. Purchase specifications were written, vendor capabilities were evaluated and vendor surveys run, all received parts and material were 100% inspected and/or tested to assure conformance to the specification and purchase order requirements.

SECTION IV

SYSTEM DEVELOPMENT/QUALIFICATION

4.0 General

The successful completion of the Firebird program as originally intended, was contingent on the development of interferometer components insensitive to cryogenic temperatures and varying attitudes. The following section briefly describes the results of the development phase of the program including the problems encountered with the interferometer bearing which resulted in a significant reassessment of the program objectives.

4.1 Component Qualification

The system components assembled and tested for low temperature operation included: the reference interferometer, this signal interferometer, the HeNe reference laser source, and the various vacuum seals associated with the interferometer and external can.

The interferometer cubes were tested in a "cold box" with transparent panels for viewing shifts in the fringe pattern produced by the two stationary reflecting elements illuminated with a Helium line source. Both the signal and reference cubes maintained alignment to within 10 visible fringes at 80°k.

During the low temperature qualification of the interferometers it was observed that the HeNe laser would detune significantly if temperature gradients were allowed along the tube length. The problem was minimized with the design of a laser housing which included pad heaters and superinsulation positioned around the cavity length to maintain a stable as well as uniform absolute temperature.

4.2 Interferometer Bearing Development

The primary objective of the development phase of the program was the design, construction, and qualification of a low temperature bearing providing the highly precise motion of the moving mirror required in all operating attitudes. Previous experience with cryogenic instrumentation eliminated the gaseous nitrogen air bearing from consideration due to physical size constraints imposed on the Firebird bearing assembly. In addition, the conventional room temperature oil bearing did not perform adequately due to changes in the oil viscosity at low temperatures. As a result of this preliminary testing, it became apparent that a totally new approach to the bearing problem was necessary.

To facilitate a discussion of the bearing design, the following list specifies a set of critical design objectives considered essential for proper sensor operation.

1. Operating temperature range: 80°K to 300°K
2. Orientation stability: signal interferogram stability shall be within 10% of the measured peak at a vertical position for all operating attitudes, pitch ± 30°, roll ± 10°.
3. Rotational bearing tilt: less than 5 arc minutes per 180° rotation.
4. Longitudinal bearing tilt: less than 10 arc seconds per centimeter stroke.
5. External stress components on the outer fixed bearing shall be a uniform minimum.

The bearing developed for the Firebird program after considerable time and effort consists of a spring loaded glass inner bearing with a threaded zirconium mirror mount epoxied to each end, a spring loaded glass outer bearing sleeve, and a dry film lubricant, see Figure 18. The outer glass bearing sleeve contacts the surrounding magnet assembly at two orthogonal points with a coil spring providing a constant force of 250 grams, five times the mass of the moving assembly, at a third contact point. As the surrounding magnet iron contracts due to low temperature, essentially all of the force is transferred to the spring rather than the bearing sleeve, resulting in a constant external compression on the sleeve independent of temperature.

The inner bearing design consists of a precision glass cylinder dimensionally matched to the outer sleeve to within .0005". To insure misalignment of the inner bearing with respect to the outer fixed sleeve is held to the required tolerance, a small section of the inner bearing is spring loaded against the outer sleeve. The technique utilizes a constant spring force of five times the mass of the moving assembly applied to a 1.21" lengthwise section of cut inner bearing, see Figure 18, positively holding the bearing to one side of the sleeve. The force is sufficient to maintain bearing tilt to within 10 arc seconds per centimeter travel in all operating attitudes as required. The spring loaded approach does have an inherent bend associated with the asymmetry of the cylinder. This deficiency, although not negligible, is predictable allowing piezoelectric compensation in the actual final sensor configuration to maintain alignment.

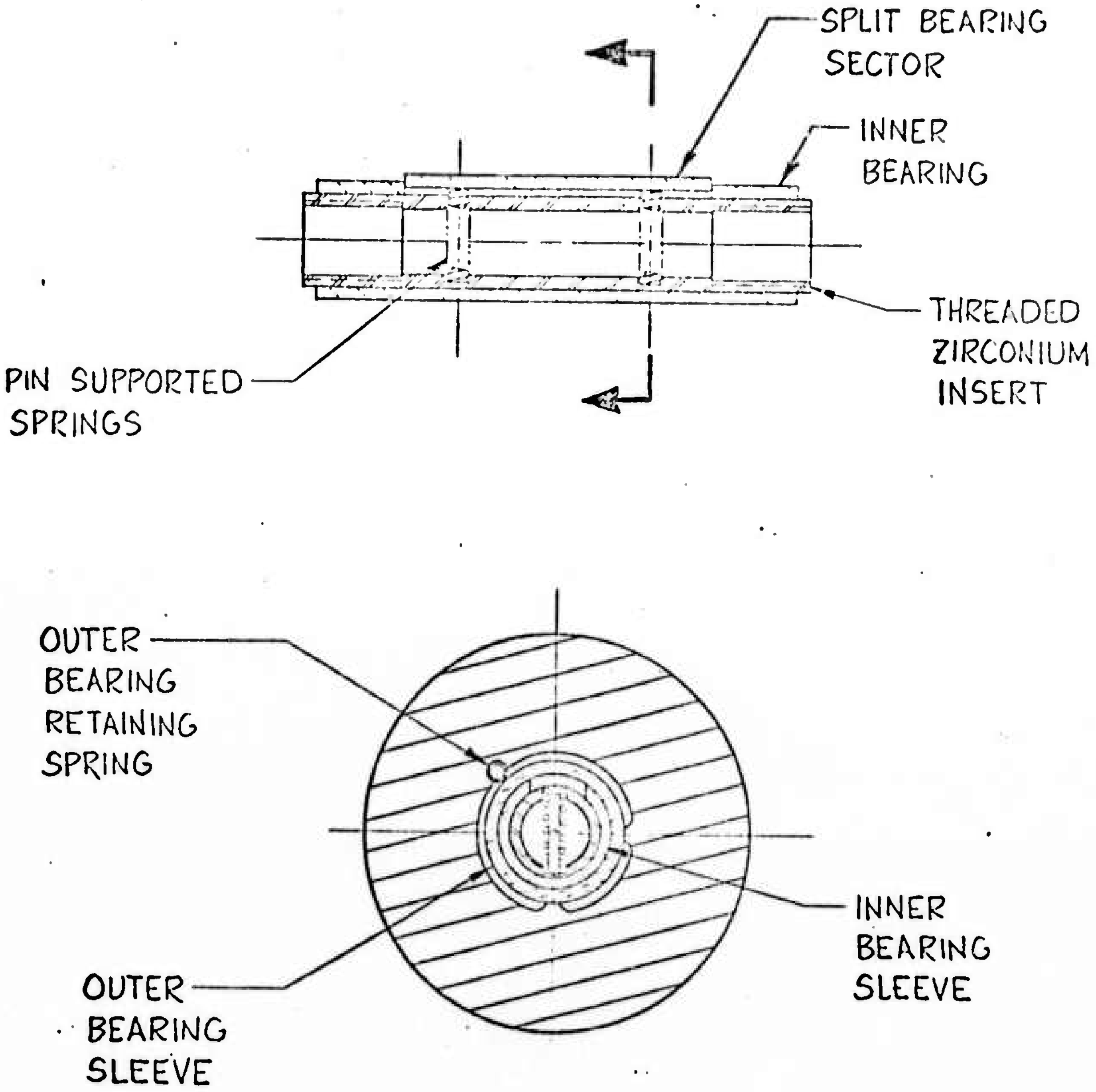

FIGURE 18 - ASSEMBLED BEARING IN MAGNET POLE PIECE

The significance of this inner bearing tilt can perhaps best be expressed as a weighted path length error across the interferometer aperture defined as

$$\Delta\lambda_t = 0.424 \times \alpha \times B \times D$$

where

$\Delta\lambda_t$ = misalignment (cm)

α = tilt coefficient: 5×10^{-5} rad/cm

B = the optical retardation: 2 cm

D = the diameter of the mirror: 2.54 cm

Considering the shortest wavelength of interest for the Firebird program to be $\lambda_s = 5.0\mu$, we can present the bearing tilt as a fractional part of λ_s via the above expression, $\Delta\lambda_t/\lambda_s \leq .21$. The effect of this bearing tilt is to diminish the energy coherence at the end of the stroke, reducing resolution.

The lubricant chosen for the inner bearing design consists of even coats of dry molybdenum disulfide applied in liquid form. When dry, the molybdenum disulfide forms a uniform film less than .0005" thick over the entire bearing length providing a lubricated surface insensitive to cryogenic temperatures.

The technique for mounting the two moving mirrors and the transducer coil to the inner bearing utilizes threaded zirconium mounts epoxied to the bearing ends. The choice of zirconium was based on thermal similarities between glass and zirconium, particularly the thermal expansion coefficients.

Unfortunately, the development and qualification of this bearing assembly expended a significant portion of the program time and funds without a substantial return in working hardware at the assembly phase of the program. This factor coupled with the logistics problems associated with the system integration led to a re-assessment of the program objectives.

SECTION V

ASSEMBLY/ACCEPTANCE TESTING

5.0 General

The change in program scope redefined the level and direction of the assembly effort to include primarily subsystem checkout and overall system integration as described in the following paragraphs.

5.1 Subsystem Verification

The subsystem test and verification procedures consisted of a sequence of test designed to demostrate compliance with the electrical, mechanical, and environmental specifications defined in the statement of work. The following summary, Figure 19, shows successful completion of all qualification test requirements, with the exception of certain specifications involving the stabilized spectrometer mount. The problems encountered were electrical and mechanical requiring a refurbishment by the vendor. The corrective measures were initiated, but, due to the exhaustion of funds available in the program, work was subsequently halted.

5.2 Subsystem Integration

Following the completion of the various test and verification procedures, the subsystems were assembled and interfaced with the Phoenix spectrometer sensor head. Each hardware item was successfully interfaced with no additional problems occuring of major significance. The system as a unit was shown to meet all acceptance tests requirement by demonstration prior to shipment.

FIGURE 19 - SUBSYSTEM VERIFICATION TESTING

Subsystem/Component	Functional Verification	Environmental Verification	Problems/Status
1. Measurement			
LN_2 storage tank and transfer line	Δ	o	Internal heater failure/closed
Measurement System Electronics	X	N.A.	None
Control Panels	X	N.A.	None
Ground Support Panel	X	N.A.	Digital Readout Failure/Closed
2. Pointing			
Gimbal Assembly	o	o	Mechanical Resonance Phenomena/Currently Unresolved
Gimbal Electronics	o	N.A.	Torque Amplifier Failure/Currently Unresolved
Joystick	Δ	N.A.	None
3. Recording			
Primary Magnetic Recorder	Δ	o	None
Time Code Generation	o	N.A.	None
4. Data Processing			
Data Processing System	Δ	N.A.	Magnetic Tape Drive Failure/Closed

KEY:

BEI VERIFICATION	X
VENDOR VERIFICATION	o
BOTH	Δ