AD/A-005 817

TURBINE ENGINE CONTROL SYNTHESIS

Samuel E. Arnett

Bendix Corporation

Prepared for:

Air Force Aero Propulsion Laboratory

December 1974

NOTICE

When Government drawings, specifications, or other data are used for any purpose other than in connection with a definitely related Government procurement operation, the United States Government thereby incurs no responsibility nor any obligation whatsoever; and the fact that the Government may have formulated, furnished, or in any way supplied the said drawings, specifications, or other data, is not to be regarded by implication or otherwise as in any manner licensing the holder or any other person or corporation, or conveying any rights or permission to manufacture, use, or sell any patented invention that may in any way be related thereto.

This final report was submitted by the Energy Controls Division of the Bendix Corporation, under Contract F33615-72-C-1716. The effort was sponsored by the Air Force Aero-Propulsion Laboratory, Air Force Systems Command, Wright-Patterson AFB, Ohio under Project 3066, Task 306603 and Work Unit 30660354 with Mr. Charles E. Ryan, AFAPL/TBC, as Project Engineer. Mr. Samuel E. Arnett of Bendix Energy Controls Division was technically responsible for the work.

This report has been reviewed by the Information Office (ASD/OIP) and is releasable to the National Technical Information Service (NTIS). At NTIS, it will be available to the general public, including foreign nations.

This technical report has been reviewed and is approved for publication.

C E Ryan

CHARLES E. RYAN, JR, GS-14
Project Engineer

FOR THE COMMANDER

CHARLES E. BENTZ
Technical Area Manager, Controls

Copies of this report should not be returned unless return is required by security considerations, contractual obligations, or notice on a specific document.

UNCLASSIFIED

SECURITY CLASSIFICATION OF THIS PAGE (When Data Entered)

REPORT DOCUMENTATION PAGE

READ INSTRUCTIONS
BEFORE COMPLETING FORM

1. REPORT NUMBER
AFAPL-TR-74-113

2. GOVT ACCESSION NO.

3. RECIPIENT'S CATALOG NUMBER

4. TITLE (and Subtitle)
Turbine Engine Control Synthesis

5. TYPE OF REPORT & PERIOD COVERED
Technical Report (Final)
June 1972 - December 1974

6. PERFORMING ORG. REPORT NUMBER
ECD-863-18667R

7. AUTHOR(s)
Samuel E. Arnett

8. CONTRACT OR GRANT NUMBER(s)
F33615-72-C-1716

9. PERFORMING ORGANIZATION NAME AND ADDRESS
Energy Controls Division
The Bendix Corporation
717 N. Bendix Drive, South Bend IN 46620

10. PROGRAM ELEMENT, PROJECT, TASK AREA & WORK UNIT NUMBERS
P.E. 62203F, Proj 3066
Task 306603, W.U. 30660354

11. CONTROLLING OFFICE NAME AND ADDRESS
Air Force Aero-Propulsion Laboratory (TBC)
Wright-Patterson AFB OH 45433

12. REPORT DATE
December 1974

13. NUMBER OF PAGES
212

14. MONITORING AGENCY NAME & ADDRESS (if different from Controlling Office)

15. SECURITY CLASS. (of this report)
UNCLASSIFIED

15a. DECLASSIFICATION/DOWNGRADING SCHEDULE
N/A

16. DISTRIBUTION STATEMENT (of this Report)

Approved for public release; distribution unlimited.

17. DISTRIBUTION STATEMENT (of the abstract entered in Block 20, if different from Report)

18. SUPPLEMENTARY NOTES

Reproduced by
NATIONAL TECHNICAL
INFORMATION SERVICE
US Department of Commerce
Springfield, VA. 22151

PRICES SUBJECT TO CHANGE.

19. KEY WORDS (Continue on reverse side if nece… and identify by block number)
"Turbojet Engine Acceleration Control"
"Pressure Ratio Control"
"Commercial Digital Computer Engine Control"
"Closed Loop Acceleration Control"
"Closed Loop Air Flow Parameter Control"
(Cont'd on reverse)

20. ABSTRACT (Continue on reverse side if necessary and identify by block number)

A highly versatile, research type, externally programmable control system for use in development and evaluation of new modes of control was assembled at the Air Force Aero-Propulsion Laboratory. It includes: sensors and transducers to measure and transform engine operating state, engine geometry actuation devices and fuel control mechanisms, a J85-13 engine mounted the cell of Room 21, Building 18C of the AFAPL, a simulation of the J85 engine on the AFAPL's Applied Dynamics AD/Five Computer, programs for the IBM 1800 computer to control the engine and the simulated engines, and interface (Cont'd on back)

DD FORM 1 JAN 73 1473 EDITION OF 1 NOV 65 IS OBSOLETE

UNCLASSIFIED

SECURITY CLASSIFICATION OF THIS PAGE (When Data Entered)

Block 19. Key Words (Cont'd)

"Proportional Plus Integral Speed Control"
"Engine Simulation by Analog Computer"
"Digital Computer Control Computation"

Block 20. Abstract (Cont'd)

electronic equipment to complete the circuit between the digital computer, engine-mounted equipment and the simulated engine.

The system and computer control programs developed made available: a start fuel flow schedule, fuel flow schedules bounding the safe operating region of the engine, proportional burner pressure limiting, proportional and proportional plus integral turbine temperature control, proportional and proportional plus integral engine speed control, engine speed request rate for acceleration control, speed request rate for deceleration control, speed rate of change control, compressor discharge air flow control, compressor geometry controls, and exhaust nozzle control.

TABLE OF CONTENTS

TABLE OF CONTENTS (Continued)

TABLE OF CONTENTS (Continued)

TABLE OF CONTENTS (Continued)

LIST OF ILLUSTRATIONS

LIST OF ILLUSTRATIONS (Continued)

LIST OF ILLUSTRATIONS (Continued)

LIST OF ILLUSTRATIONS (Continued)

LIST OF ILLUSTRATIONS (Continued)

LIST OF TABLES

SYMBOLS

Symbol	Name	Engine Station	Units
AN	Nozzle Area	8	Square inches
A8	Nozzle Position	8	Percent
F_n	Break Frequency		Hertz
K	Constant		
K_I	Integral gain		
K_P	Proportional gain		
N	Engine Speed	Shaft	RPM or Percent
$\dot{N}$	Rotor Acceleration	Shaft	Percent/Second
P_o	Nozzle Discharge Pressure		PSIA
P_s	Static Pressure	3	PSIA
P_t	Total Pressure	3	PSIA
P_2	Engine Inlet Pressure	2	PSIA
$(P_{2.3}-P_2)$	Compressor Interstage Press.	2.3	PSID
$(P_{2.4}-P_2)$	Compressor Interstage Press.	2.4	PSID
$(P_{2.5}-P_2)$	Compressor Interstage Press.	2.5	PSID
P_3	Burner Pressures	3	PSIA
P_5	Turbine Discharge Pressure	5	PSIA
Q	Rotor Torque	Shaft	Foot-Pounds
S	Laplace Operator		Radians/Second
T_2	Engine Inlet Temperature	2	Degrees Rankine
T_3	Compressor Discharge	3	Degrees Rankine
T_4	Turbine Inlet	4	Degrees Rankine
T_4 T/C	Turbine Inlet From Thermocouple	4	Degrees Fahrenheit
T_4 C	Dynamically compensated Turbine Inlet from Thermocouple	4	Degrees Fahrenheit
T_5	Turbine Discharge	5	Degrees Rankine
T_5 T/C	Turbine Discharge from thermocouple	5	Degrees Fahrenheit

SYMBOLS (Continued)

Variable Symbol	Name	Engine Station	Units
V	Volts		Volts
W_F	Fuel Flow		Pounds/Hour
$W\sqrt{\Theta}/\delta$	Corrected Airflow	3	Pounds/Second
$\Delta P/P$	Pressure Ratio Sensor	3	Volts
ΔT	Differential Temperature	4	Degress Rankine
Δt	Digital Computer Iteration Time		Seconds
ΔW_F	Fuel Flow Change	3	Pounds/Hour
δ	Pressure/Standard Pressure	2	Psia/Psia
θ	Temperature/Standard Temp.	2	°R/°R
ζ	Natural Frequency Damping Ratio		
τ	First Order Lag Time Constant		Seconds

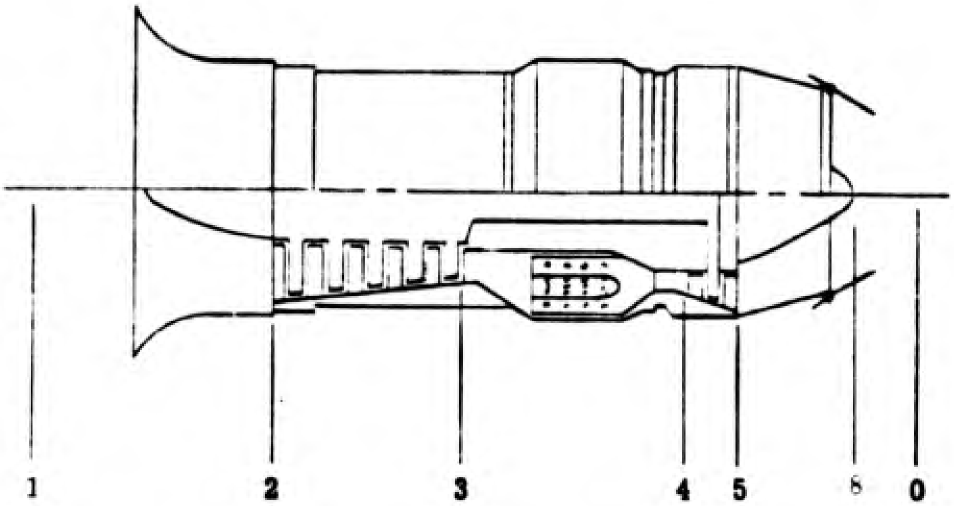

SECTION I

INTRODUCTION AND SUMMARY

Aircraft gas turbine engines have been improved greatly in recent years, not only in measure of merit such as thrust-specific-fuel-consumption, but in operating flexibility as well; that is, their response to a call for a change in thrust is highly automatic, rapid and safe. This flexibility has, however, exacted a toll in complexity. Today's engines have very complicated control systems. Future engines will demand even more of their control systems. Conventional control system synthesization and development practice may not be adequate to meet this challenge. Consequently, there is need for the exploratory control system synthesis work.

REQUIREMENTS

The goal of this project was to assemble research-type, externally programmable control system for use in development and evaluation of new modes of control using improved sensing and computation. It was desired that this system employ, to the extent practicable, items of government property plus such additional items as may be necessary to provide a coherent system. The project was to include sufficient engine running to demonstrate that the goal had been accomplished.

The system was to include:

- A logic section to regulate the flow of fuel to the engine's combustor, to control the position of various movable parts of the engine, and perform other necessary functions.
- The AFAPL's IBM 1800 Digital Computer to accomplish the computation function of the "logic section."
- Sensors, transducers, and associated equipment to measure and transform engine operating state, and other data.
- Interface/intermediary/ancillary equipment needed to achieve an internally compatible system.
- A hybrid J85-13 engine incorporating a variable exit nozzle and associated actuation system, in addition to standard J85 parts. The engine was to be mounted in the altitude cell of Room 21, Building 18C of AFAPL.

- The AFAPL's Applied Dynamics AD/FIVE analog computer programmed to represent the engine sufficiently for system checkout.

Functional requirements of the system were to include:

- Accurate control of engine acceleration and deceleration transients, including starting, over a wide choice of paths, at sea level static and limited altitude capability of the AFAPL facility.
- Provide stable, accurate control of engine steady-state operation.
- Prevent operation of the engine beyond its specified limits.
- Shut the engine down automatically in the event an unsafe operating condition is experienced.
- Incorporate provisions for the accommodation of inputs normally associated with frequency-response, transient-response, and optimizing control testing.
- Control accurately the position of various movable parts of the engine. These parts include the exhaust nozzle, compressor inlet guide vanes and compressor bleed valves. In addition, the system was to include provisions for variable compressor and turbine stators.
- Sufficient flexibility that the system can readily accommodate modification to the characteristics of its individual elements.
- The AFAPL's IBM 1800 Digital Computer for essentially all its computation needs.

PROGRAM ORGANIZATION

The program was to be divided into three distinct phases of effort and time periods. There existed, however, equipment for control of a J85-7 engine in rudimentary form. Much of the work specified by the requirements of this project had been initiated during prior AFAPL programs. During the course of the program, the J85-7 engine was to be used for other AFAPL programs. Since the J85-7 and the J85-13 are similar except for the variable exhaust area incorporated in the J85-13 system, items could be fabricated and checked on the J85-7 for future installation on the J85-13. Further some equipment to be delivered during the project could be useful if available for the J85-7 system.

The program included the following:

- Models of the engine and control loops were to be programmed in suitable computers to establish system requirements. This work was accomplished in three steps.

  (1) The models were programmed for the Bendix Pace analog computer and checked for operation.

  (2) The program was modified for the AFAPL analog computer and checked for operation.

  (3) The control computation parts of the program were converted to the IBM 1800 digital computer language and the digital computer was used to control an engine simulated on the AFAPL analog computer.

- Requirements for sensors, geometry actuation devices, and fuel control mechanisms were to be established. The necessary items were to be purchased or designed and fabricated, installed and tested. Some items supplied were desired for J85-7 tests as well as for the tests on J85-13 engine.

- Requirements for interface devices were to be determined. The interface was to include sensor conditioning circuits, geometry control circuits, safety circuits and circuits for communication with the digital computer. Some interface elements were available at AFAPL. The program included modification of existing equipment as well as design and fabrication of new equipment.

- An engine test program was to be established and tests performed to demonstrate operation of the system and to demonstrate that the goals of the program had been achieved.

THE SYSTEM

The block diagram of Figure 1 illustrates the elements of the system.

- Engine -- The system components were designed to control a J85 engine. The system is not limited to the engine presently available for development, but with adjustments and with a few additions and/or changes, the system is useable for control of other engines.

- Engine Geometry Controls -- Inlet guide vanes, compressor bleeds, and variable exhaust nozzle control loops are incorporated in the system. Control loops useable for other geometry such as turbine stators were designed and fabricated, and installed in the system.

- Fuel System -- The fuel system utilizes the parts list pump to supply fuel to various valving components. The components can be used to provide fuel as computed and requested. Dynamic fuel cycling may be super-imposed. Safety features including automatic cutoff, flow limiting and the engine mounted overspeed governor are integrated into the system.

- Control Sensors -- Sensors for pressures, pressure ratios, engine speed, positions, temperatures and vibration have been supplied and mounted on the engine.

- Data Sensors -- Sensor for engine performance data are supplied in the cell by AFAPL. These include temperatures, pressures, fuel flow, and engine speed.

- IBM 1800 Computer -- The IBM 1800 digital computer is used for computation. Values of engine variables are input to the computer in analog ±5 V DC or in binary form. The computer operates on the inputs according to a program and calculates desired values of engine geometry and fuel flow.

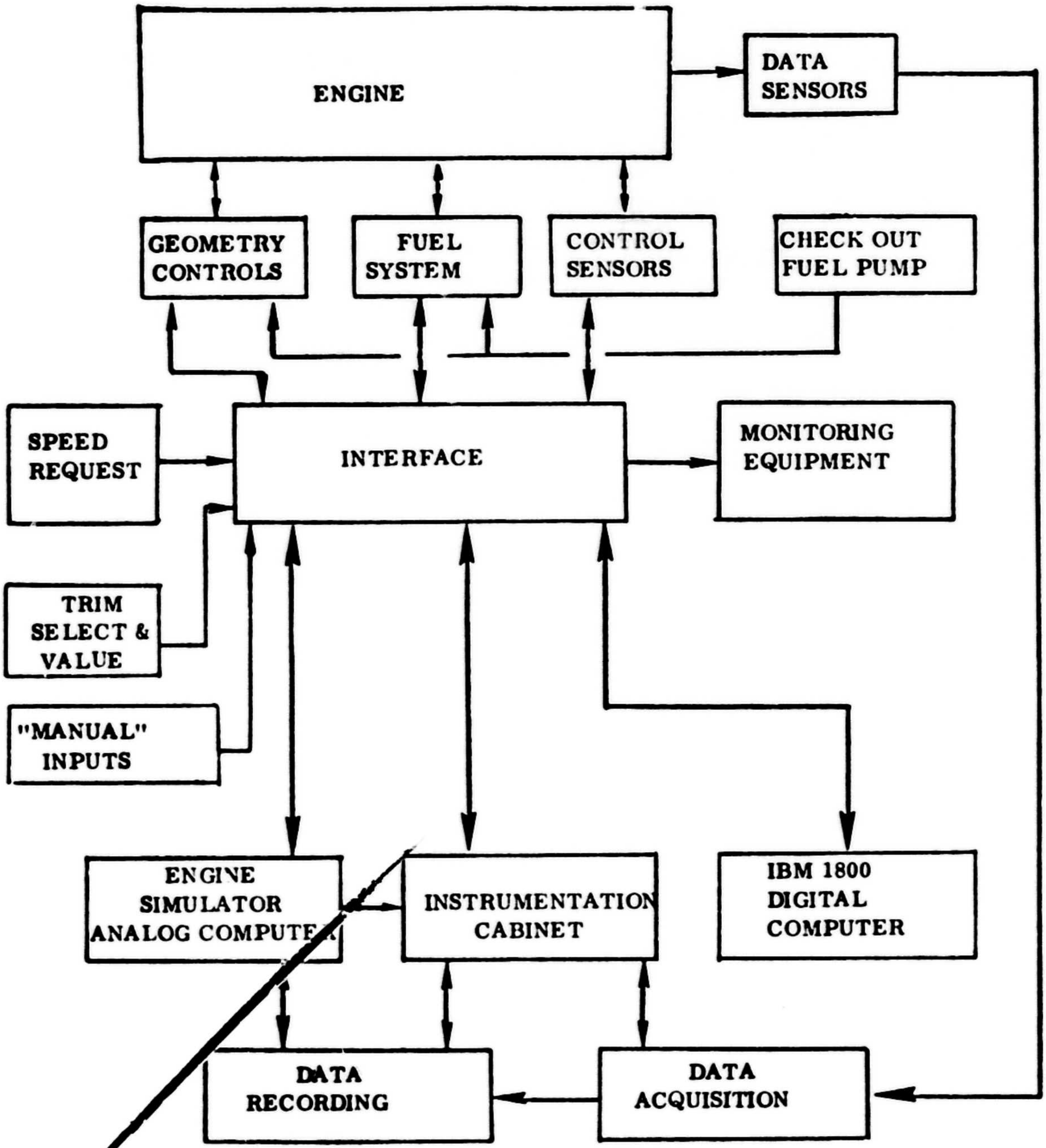

Figure 1 -- The System

- **Analog Computer** -- An analog computer is used to simulate the engine. Simulated engine variables are fed into the digital computer and used to compute desired values of engine geometry and fuel flow as if the engine were actually being controlled. Outputs from the digital computer are used to control the simulated engine.

- **Interface** -- The interface is composed of four chassiss constructed to mount in 19 inch racks. Three chassis contain various electronic circuits to convert signals from sensors and computer for use in the system. The fourth chassis provides system power.

- **Monitoring Equipment** -- Rack mounted voltmeters are used to monitor selected signals as the engine is being run. Also, digital computer values can be read on a five digit decimal display.

- **Instrumentation Cabinet** -- Many signals are available at barrier strips in a small cabinet. Simulation signals from the analog computer are fed into the system through this cabinet. Signals generated by AFAPL development items may also be input to points in this cabinet. Engine signals used in the system may be sensed here for recording and monitoring.

- **Data Acquisition and Recording Equipment** -- AFAPL strip recorders, x-y plotters and tape recorders are used to obtain performance data.

- **Checkout Fuel Pump** -- An electric motor driven fuel pump is used to check out the fuel system and geometry controls during simulated engine operation.

- **Power Levers** -- The engine operation request is by dual power levers. Their function is described on Page 8.

INTERFACE

The interface consists of three chassis containing circuits to tie the various parts of the system together. Chassis EK 14 was fabricated in 1971 and modified in 1972 and 1974. The original configurations of chassis EK 14 and EK15 are defined by references 1 and 2, respectively. These two chassis were modified and chassis EK 18 was fabricated during the program.

Power for these chassis is provided by the power supply chassis. Figure 2 is a photograph showing the chassis mounted in racks.

These chassis contain outputs to the IBM 1800 computer, simulation inputs, sensing circuits and position control circuits. In addition, monitoring circuits and devices are included.

EK 14 Chassis

Circuits contained in this chassis are not presently used. These are eighteen signals available for input to the computer for program adjustment and six points for input of variables.

Each adjustment circuit may be varied from zero to-5 VDC by setting of a potentiometer. The voltage is converted to a computer number (0 to 32767) for use in computations.

The six input points located in the instrument cabinet are used for variables generated exterior of the interface chassis.

EK 15 Chassis

The EK 15 chassis contains circuits for position control, pressure transducers, pressure ratios and frequency (speed) converters. In addition a card contains multiplier, divider and square root circuits for use in combining signals.

- Position Control Circuits

  There are twelve position control circuits. These circuits are designed for a position request input from 0 to +5 VDC. The request may be manual as well as from the computer. Also a step change or cyclic change can be added to the request. The feedback may be either from a potentiometer or from an LVDT through a conversion circuit to the position control circuit.

  Output from each circuit is for use with torque motors at ±14 VDC and a maximum current of .025 ampere. The output may also be connected to either of two stepper motor circuits.

- Pressure Transducer Circuits

  There are thirteen (13) circuits designed for use with strain gage type pressure transducers at 5 volts excitation. These circuits are calibrated for transducers assigned and mounted at various engine pressure sensing ports.

- Pressure Ratio Sensing Circuits

  There are two circuits designed for use with the Bendix Model PRA-A2 pressure ratio sensor.

- Frequency (Engine Speed) Circuits

  There are two circuits with digital outputs and two circuits with analog voltage outputs. The digital circuits output the number of clock pulses occurring during a set number of input pulses. The analog circuits have a voltage output proportional to input pulse frequency.

EK 18 Chassis

The EK 18 chassis contains temperature (thermocouples), vibration sensing, power lever, safety and program adjustment circuits.

- Temperature Circuits

  Each of the four (4) temperature circuits have provisions for three (3) thermocouple inputs. Any of the thermocouples, the average or the highest can be selected for output.

- Vibration Sensing Circuits

  Three (3) circuits are available for use with engine mounted accelerometers.

- Power Lever Circuits

  Two power levers are available. One is used to set the low speed value and the other is used to set the high speed value of the speed range during an investigation. A switch is used to step between the requests.

FIGURE 2 -- MOUNTING OF INTERFACE CHASSIS

- Safety Circuits

  Safety circuits are included to automatically shut down the engine in event of a power supply failure.

- Program Adjustments and Readouts

  Communication with the IBM 1800 computer is through EK 18 circuits. A selected number of program constants can be varied by manipulation of switches. Computer computation points can be called and the value read and recorded.

Power Supply Chassis

The power supply contains seven (7) "Power Mate" power supplies. Cables are used to connect voltages as required to the various chassis.

Instrumentation Cabinet

Signals generated by the circuits in the various chassis are available at barrier strips in the instrument cabinet. Engine simulation signals are through the cabinet. Signal input points are through the cabinet. Signal input points are also available in the cabinet.

FUEL SYSTEM

Figure 3 is a block diagram illustrating the components of the fuel system for operating the J85-13 engine. Fuel is supplied from the fuel farm by a boost pump at about 25 psig through a filter and a shutoff valve (A) exterior of the cell. Fuel can be returned to the tank through a shutoff valve (B) in the cell.

Flow can be directed to two paths. First, the flow can be directed to an electric motor driven pump which is used for fuel system and geometry control checkout. Second, the flow can be directed to the engine boost and main pump which is used for engine running. During checkout, selector valves 2 and 4 are opened, and during engine running, selector valves 1 and 3 are opened.

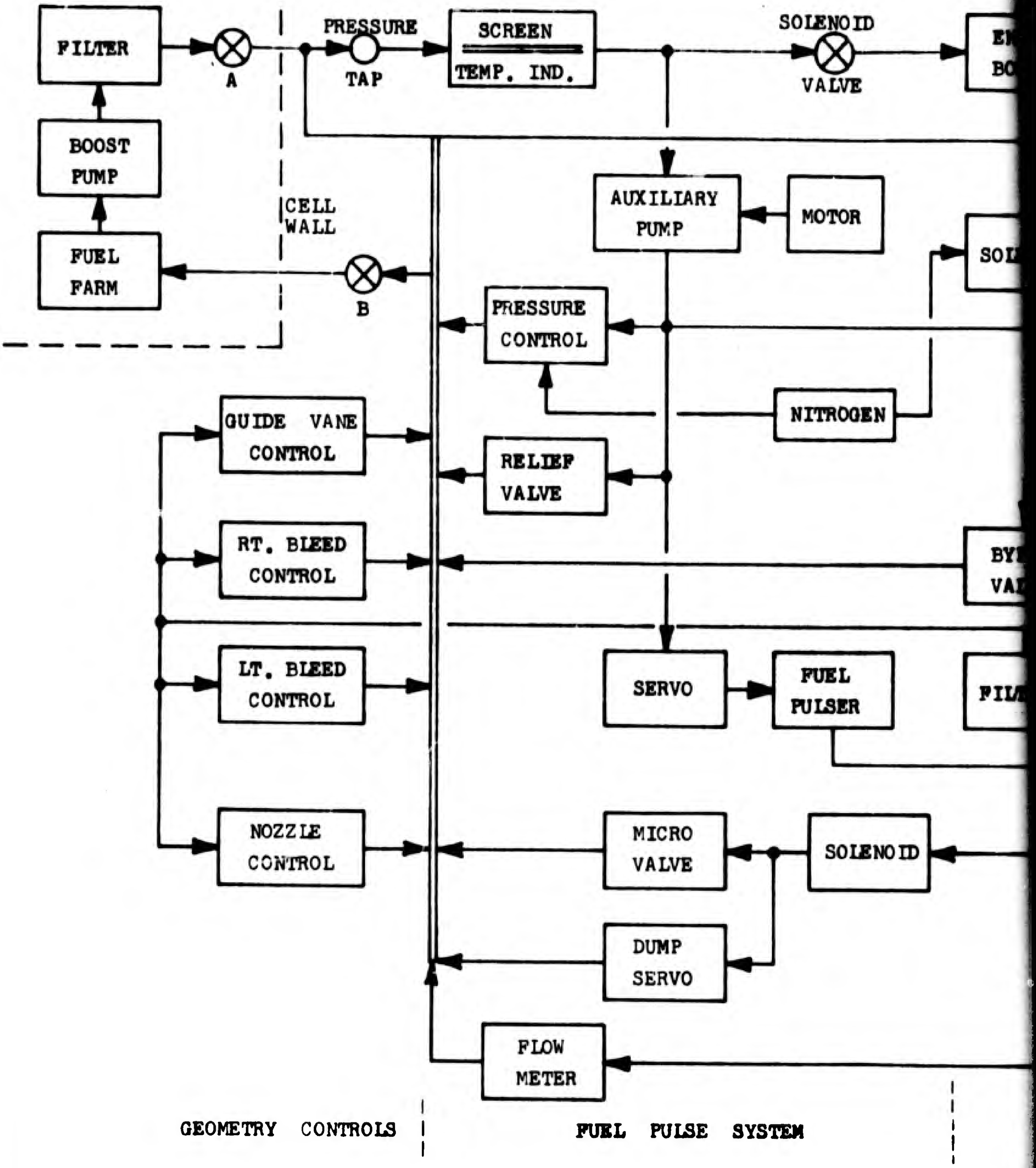
FILTER
A
PRESSURE
TAP
SCREEN
TEMP. IND.
SOLENOID
VALVE
BOOST
PUMP
CELL
WALL
FUEL
FARM
B
AUXILIARY
PUMP
MOTOR
PRESSURE
CONTROL
NITROGEN
GUIDE VANE
CONTROL
RELIEF
VALVE
RT. BLEED
CONTROL
LT. BLEED
CONTROL
SERVO
FUEL
PULSER
NOZZLE
CONTROL
MICRO
VALVE
SOLENOID
DUMP
SERVO
FLOW
METER
GEOMETRY CONTROLS
FUEL PULSE SYSTEM

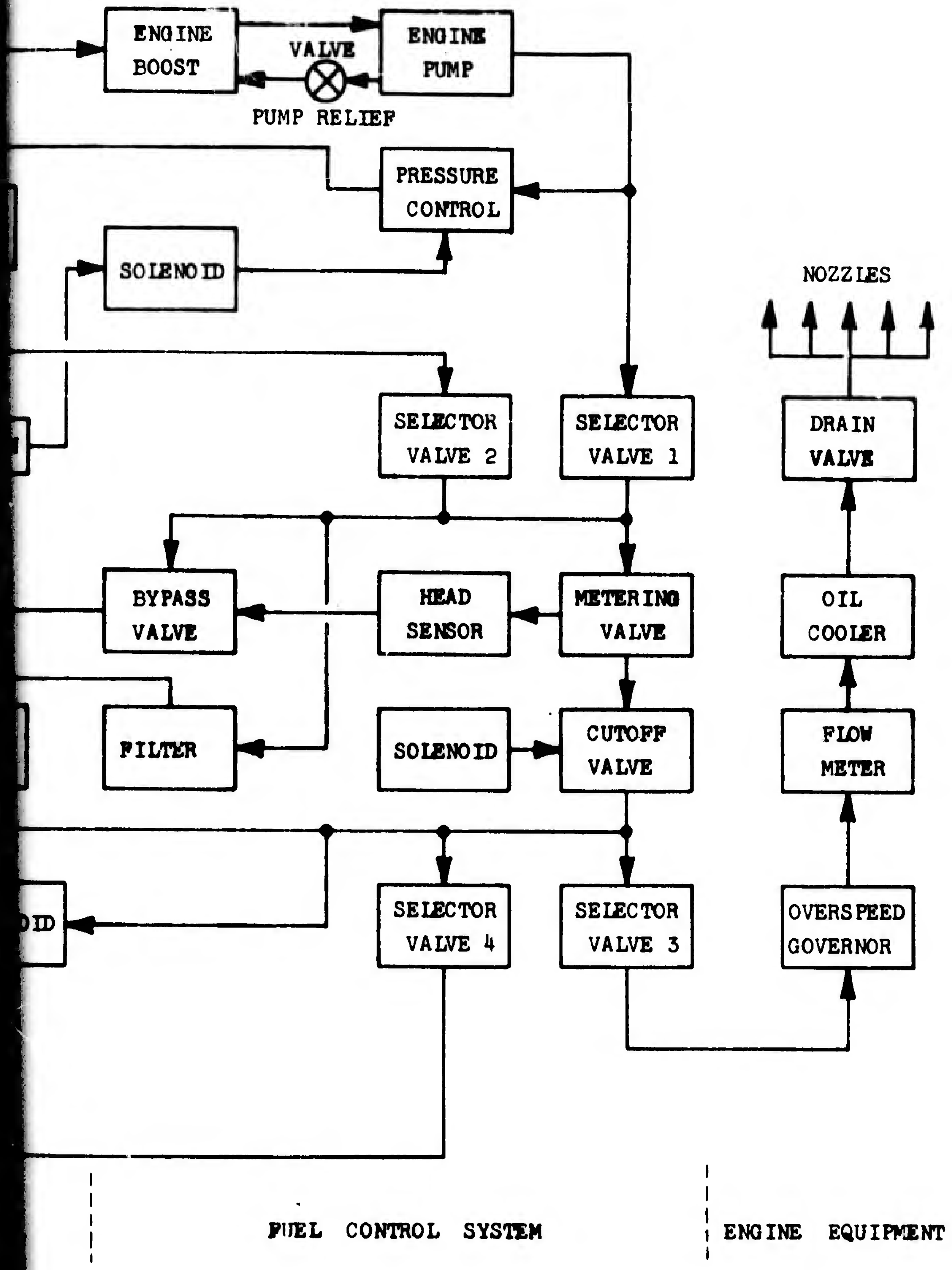

FIGURE 3 -- J 85-13 FUEL SYSTEM

With either valve 1 or 2 open, pressure is supplied to the metering valve, the bypass valve and to a filter. From the filter, flow is directed to all servo valves of the geometry controls. Maximum pressure from the auxiliary pump is controlled by a flex-flo valve with the pressure level set by a nitrogen pressure regulator. Maximum pressure from the engine pump is also controlled by a flex-flo valve with the pressure set by a nitrogen pressure regulator. In addition, a solenoid valve is incorporated to allow a rapid decrease in the nitrogen pressure to reset the maximum pressure as a safety control.

Flow from the metering valve is through a solenoid operated cutoff valve to a header to valves 3 and 4. With valve 4 open, flow is through the checkout flow meter back to the inlet line. Since flow is recirculated in this configuration, valve B is opened sufficiently to control fuel temperature increase. With valve 3 open, flow is directed to the engine overspeed governor, flow meter, oil cooler, drain valve and nozzles. The header also includes provisions for pulsing the engine flow by a pulser powered by the auxiliary pump or by dumping fuel through a solenoid valve to either a servo valve or to a finely adjustable micro-valve.

ENGINE SIMULATION BY AN ANALOG COMPUTER

The simulation of the J-85 engine as detailed in Section IV is based on deviation from steady state conditions due to fuel and nozzle variation from reference values. Six variables as functions of speed at 173 square inches nozzle area are generated. Compressor temperature rise is generated by a function of compressor pressure ratio. Turbine pressure ratio is calculated from compressor temperature rise and turbine temperature. The functions are for standard atmospheric conditions.

This analog simulation of the engine is used for digital computer program and system checkout. There are two switches in the instrument cabinet to switch from simulation to engine running. During engine simulation, engine fuel control and geometry components can be operated. A test pump provides fuel to the fuel control and geometry controls. To check the complete nozzle control, the engine must be cranked also. Change in engine fuel system valving is required when changing from complete system checkout to engine running.

The simulation includes a fuel schedule and speed governor and a nozzle schedule and control. These simulations are used during programming and to study effects of program changes without using the digital computer.

The program includes dynamics of rotor speed, fuel control, nozzle control and simple lags for pressure and temperature sensors. Rapid response characteristics such as combustion dead time, transport lags, and volume effects are ignored. The low frequency characteristics are reasonably represented and stability characteristic of the simulation is fairly representative of engine operation.

IBM 1800 COMPUTER PROGRAM

The computer program provides computations based on engine variables with the results of the computations output to the electronic interface package. Engine geometry positions and fuel flow are then controlled to the computed values by circuits of the interface. Computer computations are based on engine variables sensed by transducers and converted to voltages or digital words by the interface circuits. The effects of the variables in the computations are changed by program adjustments. Block diagrams of the digital programs are presented in Section III. The computer program print-out obtained by printing the card deck at the time of use is the only valid control program.

Nominal program constants are loaded into a standard trim register. These constants are transferred to a variable trim register by a reset signal. In this register the numbers can be changed by adjustment logic circuits and program. Engine variables such as pressures, temperatures, pressure ratios, positions, rotor speed and accelerations are sensed by transducers and converted by interface circuits to signals compatible with the computer inputs. Power lever position is also input through the interface to the computer.

The computer program utilizing the constants and variable inputs computes positions of the fuel valve, inlet guide vanes, compressor bleeds, and exhaust nozzle. These signals are output to the interface. The computer outputs are compared with feedback signals by circuits of the interface and control signals are generated. Control signals are output to engine mounted control devices.

Safety circuits incorporated in the interface reset the program to standard trims. When the program is being varied to examine effects of trim values and problems occur, the program is reset to the safe standard values by the operator reset switches. Signals may be conditioned or simulated by an analog computer and input to the program through the interface.

Two computer programs were developed. The first includes control loops and features to demonstrate the system per contract requirements. The second contains a fuel boundary, start provisions, governor, and input points for insertion of control loops to be studied.

SAFETY PROVISIONS

The system assembled is one of a kind. Many parts are aircraft quality production type units. Other parts are industrial off-the-shelf items used in flow bench setups. These types of equipment were used to assure a reliable system without extensive development testing. With a one of a kind system, frequent inspection of engine components and checkout of the operations is of primary importance to safety. The provisions include manual overrides and automatic features provided by equipment and IBM 1800 program.

The system incorporates design considerations for safety.

- The operators are integrated into the system.
- Equipment is designed and components are selected to provide a reliable system.
- A prerun checkout by use of the analog computer simulation is made.
- All system signals are readily monitored by voltmeters and from the digital computer program.
- Fuel system valves are automatically checked for proper positioning.
- Temperature and pressure limits are controlled by program.
- Engine speed signals are checked in the program.
- Maximum system fuel pressure is set by a nitrogen pressure controlled regulator.
- An overspeed governor is included as engine parts list equipment.

- Accelerometers are used to monitor engine vibration and may be integrated into the system to automatically decrease fuel pressure.

- Any power supply failure causes the cut-off valve solenoid to be de-energized.

SYSTEM DEMONSTRATION

The system assembled was used to operate and control the J85-13 engine using several variables and combination of variables at steady state and during transients. These various control methods and results are discussed in Section V.

The objective of the engine tests was a demonstration of use of the system for engine control by several modes. Control loops had adjustments for use in demonstrating effects due to change in values. The data obtained shows the various effects and demonstrates the flexibility of the system and variations obtainable by programming the computer.

The system was used to demonstrate engine operation utilizing the following types of control:

- Fuel Flow Boundaries -- Fuel boundaries were programmed as functions of speed, ambient temperature and burner pressure.

- Power Request -- Power request is by step or by an adjustable program rate. Manual power lever movement may also be used. Manual request is normally too slow and too erratic to demonstrate control action during transients.

- Engine Speed Control -- Two speed governor loops were used. One was a proportional control using a base ratios near required to run as a reference. The other was a proportional plus integral control using a fuel flow which exists at the time as a reference.

- Transient Speed Control -- Three methods of speed rate control were demonstrated. First, a throttle rate was used. Second, an acceleration control was used with the integral part of the speed control. Third, a fuel flow rate was used to limit speed rate.

- Burner Pressure Control -- Burner pressure limiting during steady state and acceleration was demonstrated.

- Turbine Inlet Temperature -- Proportional and proportional plus integral temperature control were used during accelerations.

- Compressor Discharge Air-Flow Parameter -- Acceleration control using compressor discharge air flow (Mach number or $\Delta P/P$) was illustrated.

- Engine Geometry Control -- The IGV and compressor bleeds are scheduled by function of rotor speed. The nozzle is scheduled by speed request with a turbine discharge temperature override.

SECTION II

SYSTEM DESCRIPTION

Figure 1 is a block diagram illustrating the various components of the system. In this section some features of the components are described. An "Operation and Service Manual" which has been delivered to AFAPL presents a detailed description of the devices. The descriptions of this section define the system sufficiently for a user to have knowledge of items available.

The electronic circuits were fabricated on Cambion wire wrap cards. Figures 4 and 5 are photographs of the component and wire wrap sides of circuit cards. This fabrication technique allows rather easy modification of circuits. A few circuit cards are filled. Many other cards have space for additions which may be desirable during future test programs.

ANALOG COMPUTER

An analog computer, AD/Five manufactured by Applied Dynamics Division of the Reliance Electric Company is integrated into the system. This computer is used for engine simulation and for some signal conditioning. There are 22 twisted pairs of signal lines connected between the computer and instrumentation cabinet. The computer engine simulation is presented in Section IV.

Signals from or tc the analog computer are through switches in the instrument cabinet. When the switches are in simulation position, the signals are input to engine variable circuits and output from the interface to the IBM 1800 computer terminal as if the signals were from the engine. When the switches are in the engine position, the simulation signal lines are open.

The following signals are connected in the present configuration.

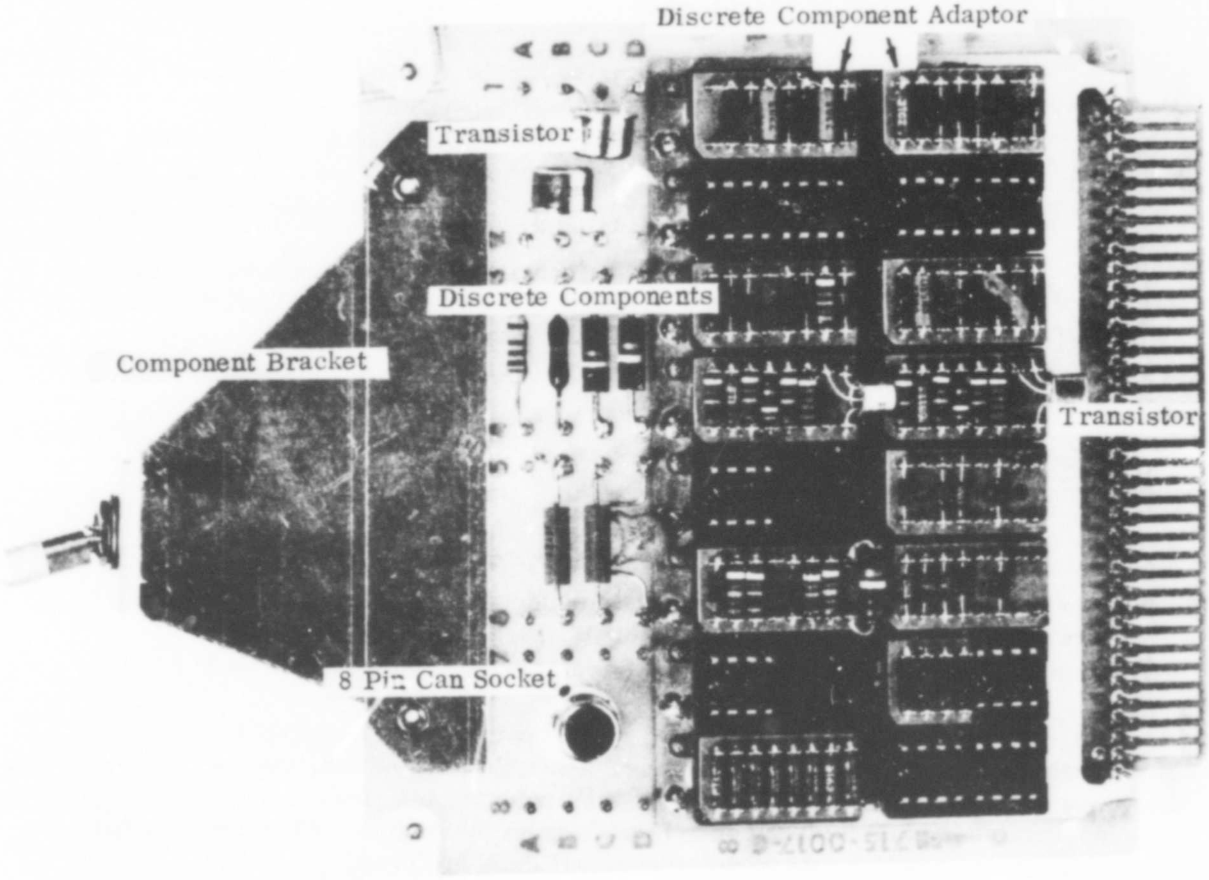

Figure 4 -- Component Side Wire Wrap Circuit Card

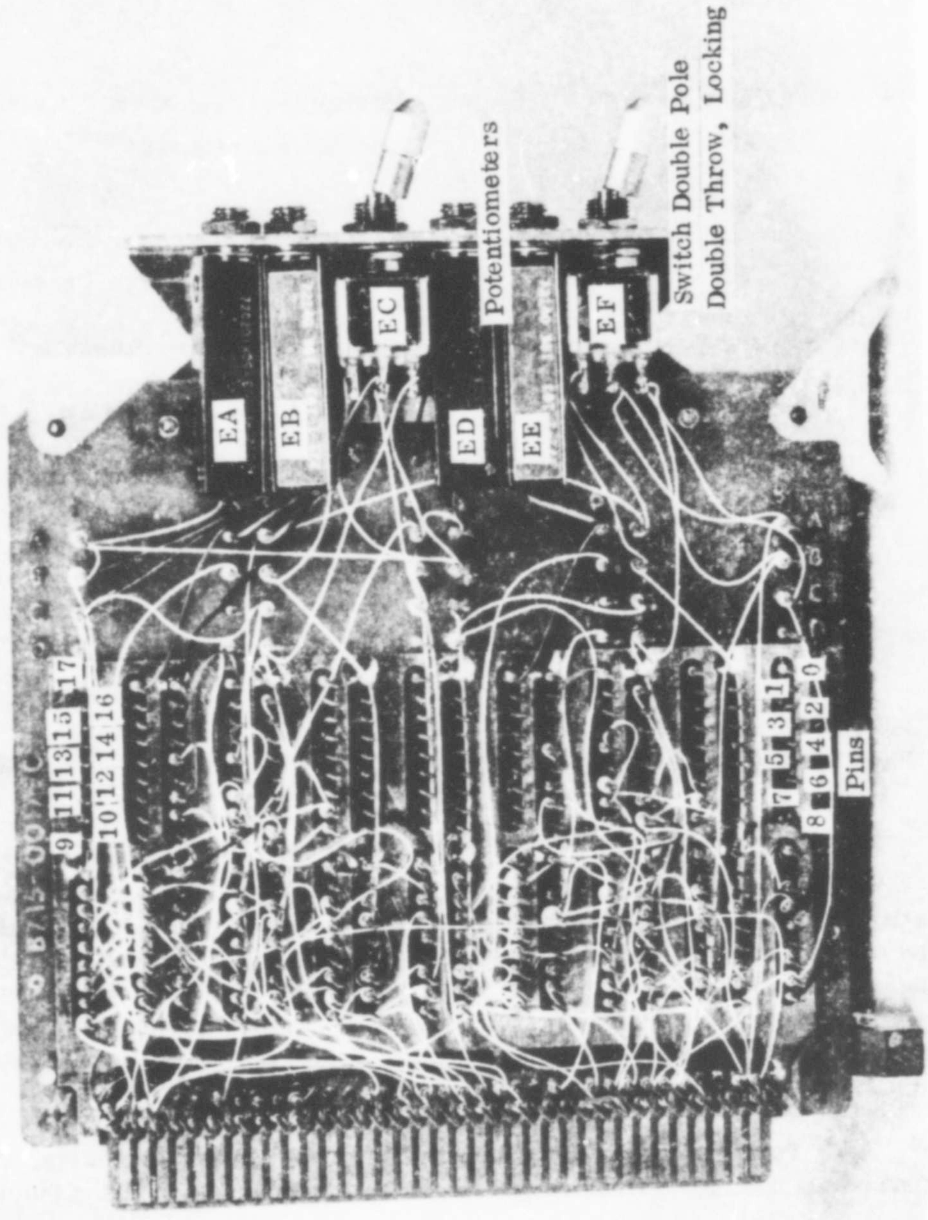

Figure 5 -- Wire Wrap Side of Circuit Card

Symbol	Definition
A8	Nozzle area request
N	Engine Speed
P3	Compressor Discharge Pressure
P5	Turbine Discharge Pressure
T4	Turbine Inlet Temperature
T5	Turbine Discharge Temperature
WF	Fuel Flow Request
$\Delta P/P$	Compressor Discharge Airflow Parameter

The speed signal is input to a voltage controlled oscillator and the output of the oscillator is through the switches to engine speed circuits. Other computer output signals are through lags to represent engine-sensor dynamics.

IBM 1800 COMPUTER TERMINAL CONNECTION

The IBM 1800 is a digital computer data acquisition and process control system. The system has analog voltage and digital word inputs and outputs used with the synthesis project computer programs. Description of the computer programs are presented in Section III. A data input-output terminal is located in the J-85 engine control room. Current programs are in assembly language with most storage and computation in single word (15 bit plus sign) form. This yields computer numbers between plus 32767 and minus 32767.

Terminal points are connected by screws in barrier strips. Input-output points used by various programs during the project are listed below.

- 64 - ±5 volts analog input points. The plus-to-minus 5 volts yields computer numbers of minus to plus 32767 respectively.
- 3 - 15 bit plus sign digital input words. A computer zero bit is a voltage less than -6 VDC. A computer one bit is a voltage greater than -1 VDC.

- 7 - ±10 volts analog output points. Plus to minus 32767 computer numbers yield plus to minus 10 volts respectively.
- 1 - 15 bit plus sign digital output. A point conducting a positive voltage is a one bit. A non-conducting point is a zero bit. The connection is made by TTL NAND gates.
- 1 - Interrupt point. A voltage change from less than -6 to greater than -1 provides an interrupt signal with the computer performing the programmed action.

Uses of terminal points are listed below:

- Engine variable signals (except speed) are input to the analog voltage points with values from 0 to -5 VDC.
- The speed is input on one 15 bit digital word. The sign bit is turned on when the speed word is changing.
- One 15 bit digital word is used for safety inputs and control program logic.
- One 15 bit digital word is used to vary computation constants and to select a computation point for readout. The constant and the desired change are selected and the interrupt is switched to obtain the change.
- The DAC's ±10 volts outputs are used as follows:

DAC 0	Fuel Request
DAC 1	Inlet Guide Vanes
DAC 2	Compressor Bleeds
DAC 3	Engine Exhaust Nozzle
DAC 4	Any selected computation point
DAC 5	Any selected computation point
DAC 6	Not assigned

- One digital output word is used to read the selected adjustment or the selected computation point.

EK 14 CHASSIS DESCRIPTION

This chassis was available at the start of the program. Some circuits were used during part of the synthesis program but the active sensor circuits have since been retired from use. The variable voltage (0 to -5 VDC) potentiometers are available for variable adjustments in the IBM 1800 programs. Six signals may be input at the instrument cabinet and outout to the IBM computer terminal. The digital voltmeter is used to monitor the EK 14 and EK 15 signals by selector switch setting and for monitoring externally generated signals.

Chassis Description

Figure 6 shows the front of the EK 14 chassis. The eighteen trim knobs are adjusted to voltages as required by the computer program. These voltages are monitored on the voltmeter by setting the selector switch to the adjustment number and setting the voltmeter switch to EK14 position. The left selector switch is used for the first 16 adjustments with the two position switch between the selector switches up. Adjustments 17 and 18 and the six external inputs are monitored with the two position switch down and by positioning the right hand switch to numbers 17 through 24.

Four cables are attached to the rear of the chassis.

- 115 VAC power cable to the "Power Supply Chassis." Required for the voltmeter and the -5 VDC power supply which provides the voltage for the trim potentiometers.
- ±15 VDC power cable to the "Power Supply Chassis." Power for the isolation amplifiers used for line drivers in all lines to the terminal.
- Twenty-four point cable to the "Computer terminal." Eighteen adjustments and six external inputs.
- Instrument Cabinet Cable. Six external input lines and the selector switch output line.

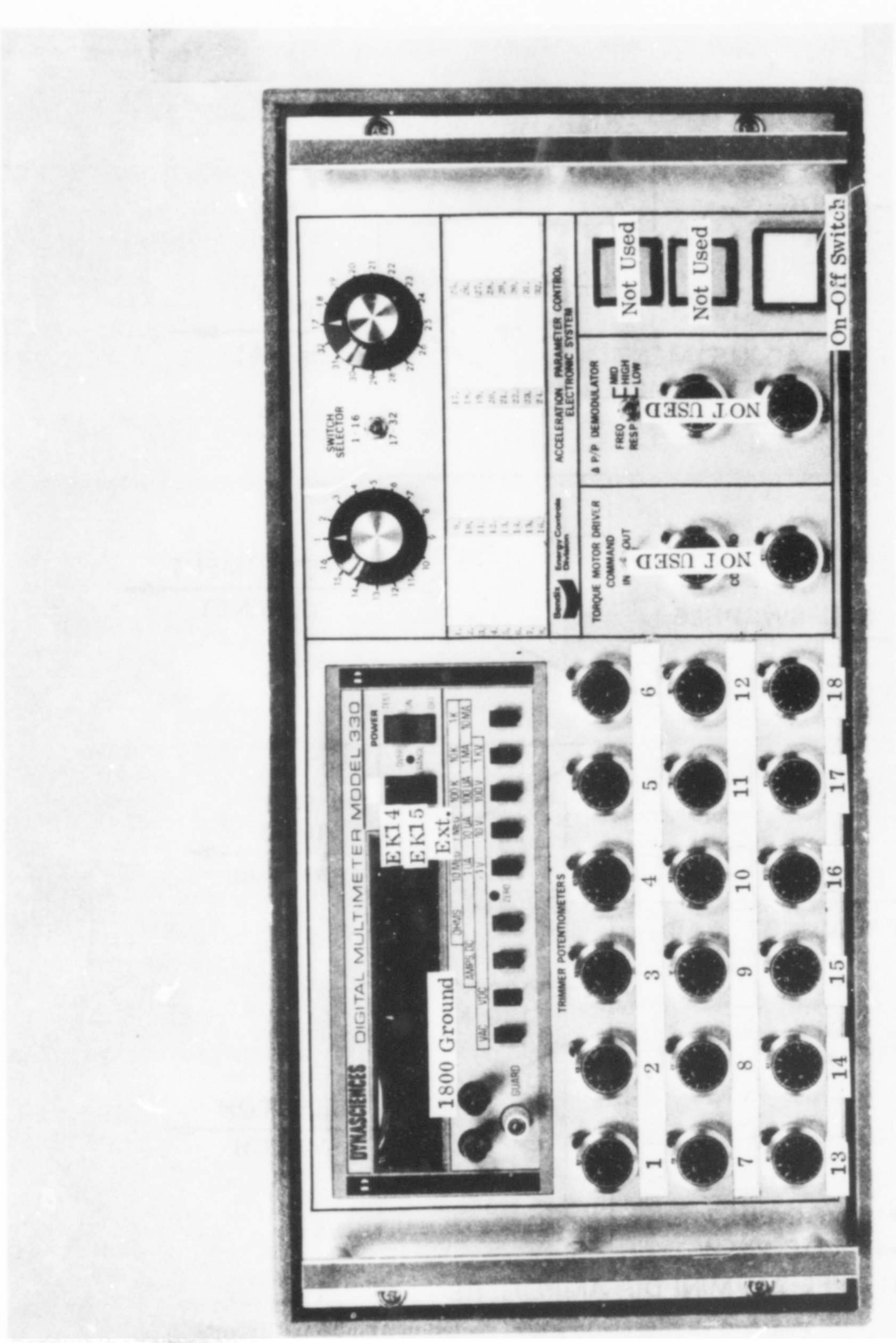

Figure 6 -- Front View of EK 14 Chassis

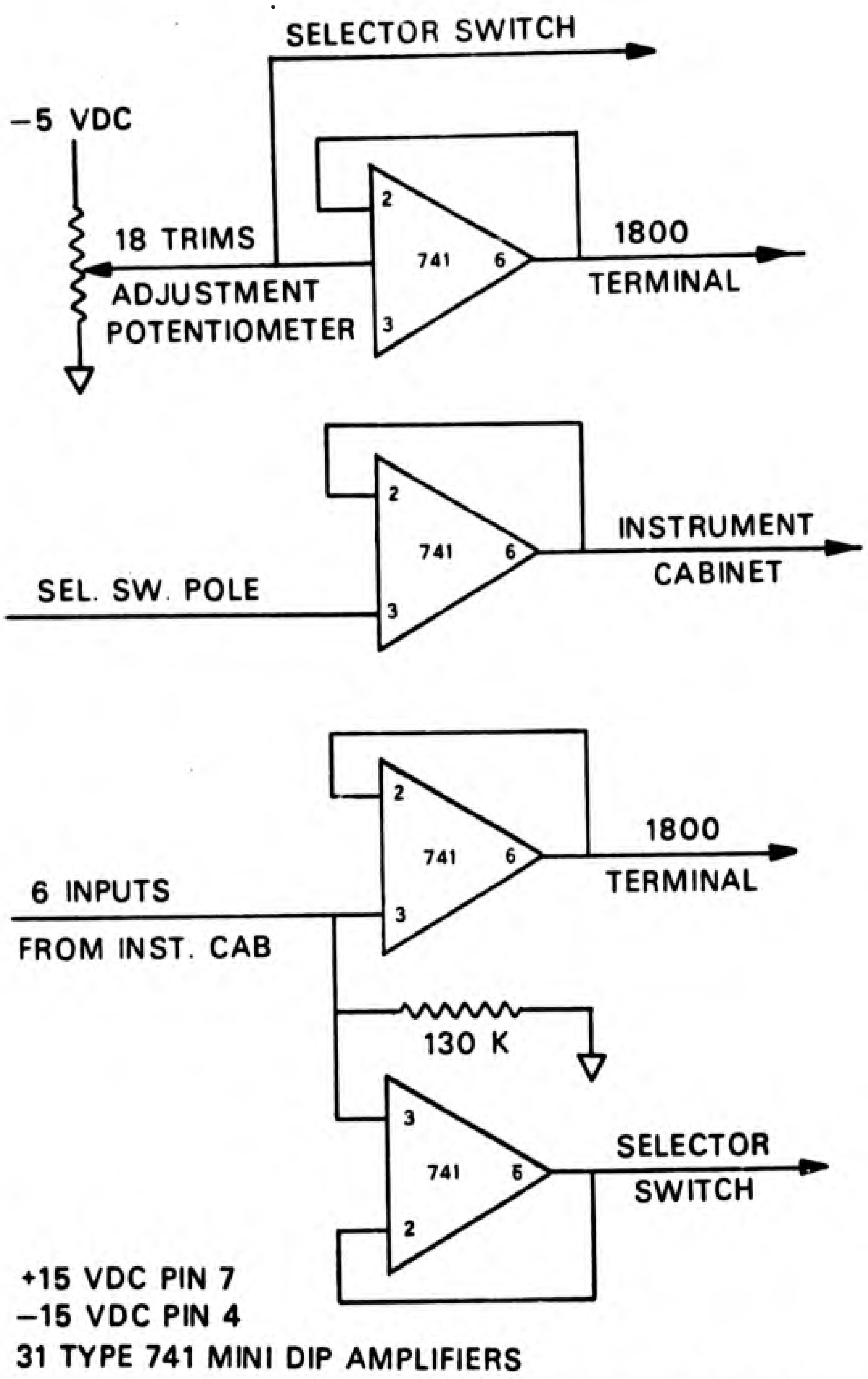

+15 VDC PIN 7
−15 VDC PIN 4
31 TYPE 741 MINI DIP AMPLIFIERS

Figure 7 -- Schematic EK 14 Isolation Amplifier Circuits

Isolation Amplifier Circuits

Figure 7 is a schematic illustrating the isolation amplifier card circuits. Thirty-one type 741 operational amplifiers are used as indicated on the schematic. Six 130K resistors to obtain zero output from any external input signal not in use are shown.

The isolation amplifier used with the switch pole allows selecting a signal for recording without loading the signal to the computer. Also the six isolation amplifiers to the selector switch allow pickup of the signal by clipping to the switch terminal for recording data without loading the input signal.

EK 15 CHASSIS DESCRIPTION

Figure 8 is a photograph showing the various controls and location of the various circuit cards of the EK 15 chassis. The circuits are incorporated on 19 Cambion wire wrap cards and two printed circuit cards for the stepper motor drivers. The circuits are listed in Table 1. The selector switches shown under the card file are used to select a step or cyclic input to the various position control circuits. Selector switches on the cards are used as discussed in the description of the circuits. Patch boards are incorporated to allow circuit selections for input to IBM 1800 computer, circuit selection to the stepper motor controls and LVDT feedbacks, and selection of variable to the arithmetic card.

Two major functions are served by the controls. First, various signals can be selected for read out, and second, the twelve position control circuits are regulated by the adjustments.

Figure 9 is a photograph of the rear panel showing the connectors used for connecting the various components of the system. Each connector is labeled and each cable for attaching to the connectors is labeled similarly. When there are several similar circuits in the chassis, the connectors are the same. This allows interchange for convenience of changing circuits. Also if a circuit fails, a replacement may be used with minor interruption of a test program.

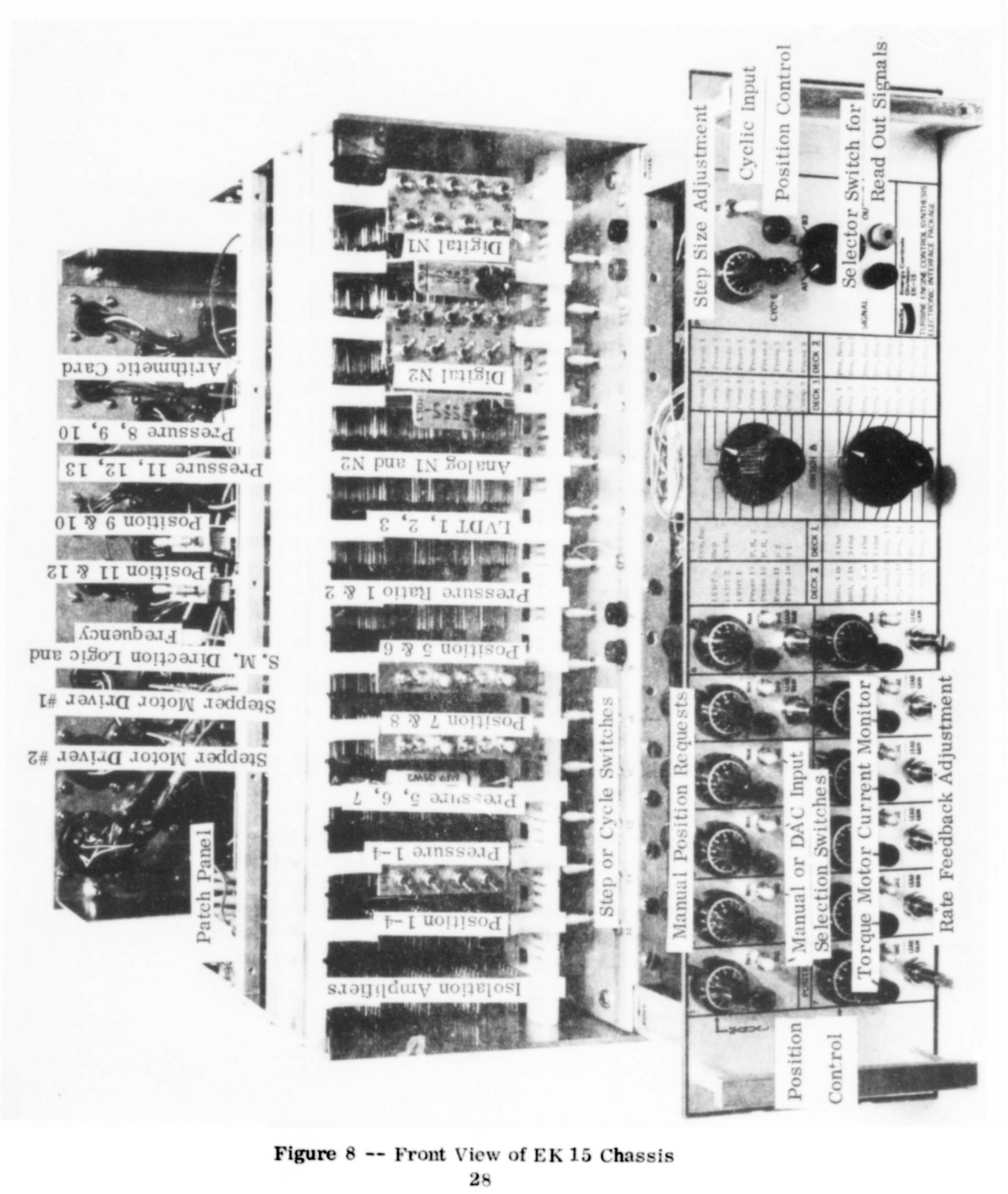

Figure 8 -- Front View of EK 15 Chassis

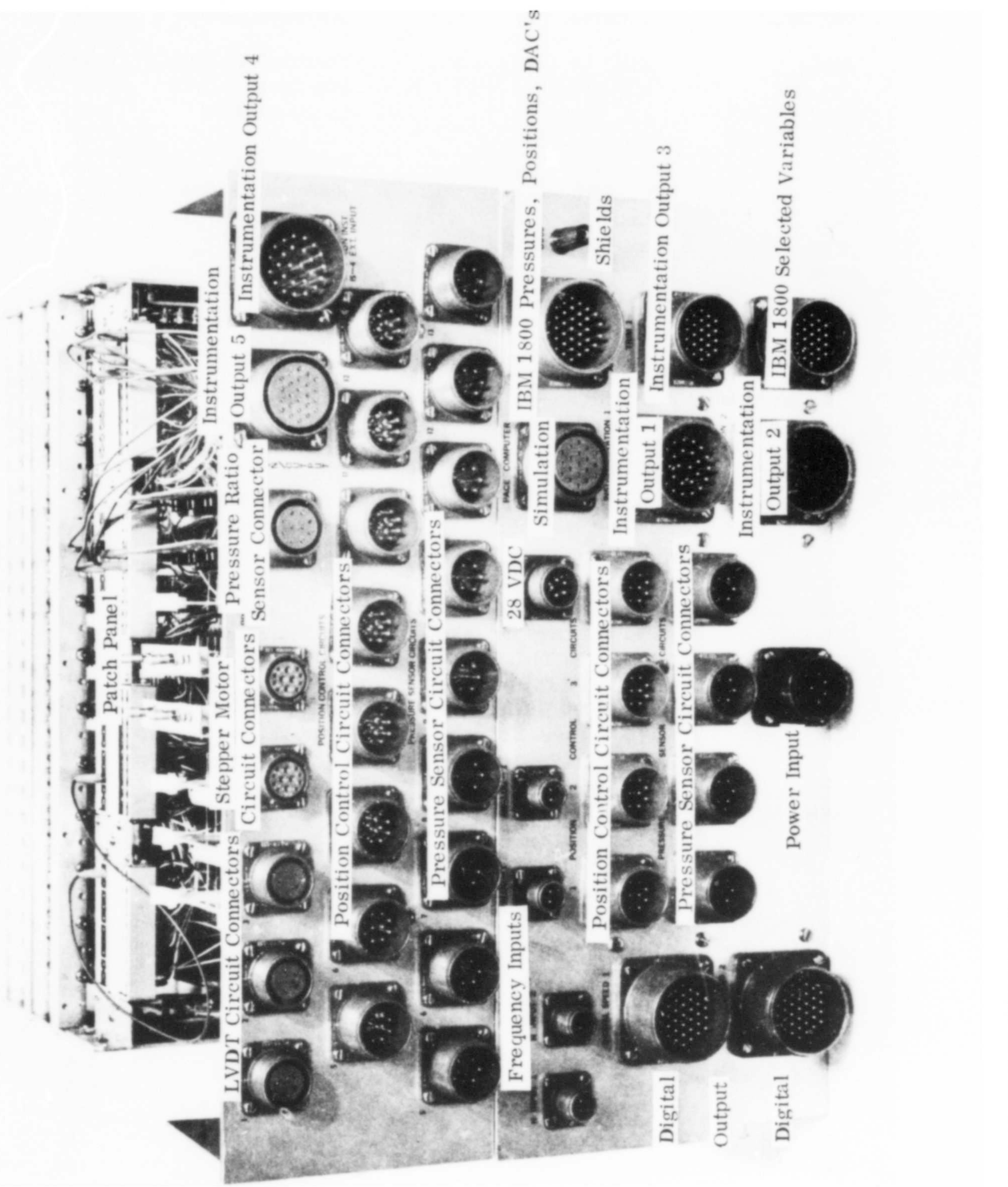

Figure 9 -- Rear View of EK 15 Chassis

Circuit	Variable	Transducer Type	Card Position
Pos 1	IGV	Position Feedback	24
Pos 2	RT. Bleed	Potentiometers or	24
Pos 3	LT. Bleed	LVDT for 5-12	24
Pos 4	Pulser		24
Pos 5	Nozzle		16
Pos 6	Fuel Flow	Hydraulic Torque	16
Pos 7	Dump Servo	Motor Servo Valve or	18
Pos 8	Turbine Vanes	Stepper Motor	18
Pos 9		Circuit	4B
Pos 10	Not defined		4B
Pos 11			5B
Pos 12			5B
Stepper Motor 1	Position	May be used with	6B & 7B
Stepper Motor 2	Control	position circuits 5-12	6B & 8B
LVDT Position 1	Demonstrator	Linear Voltage	12
LVDT Position 2	Feedback	Differential	12
LVDT Position 3		Transformers	12
P1	PB Burner Pressure		22
P2	ΔP Diff. Press. 8th stage		22
P3	P2 Compressor Inlet		22
P4	P2.3-P2 Diff. Press.	C.E.C.	22
P5	P2.4-P2 Diff. Press.	Straingage	20
P6	P2.5-P2 Diff. Press.		20
P7	P5 Turbine Discharge	Transducers	20
P8	PB Burner Pressure		2B
P9	P0 Engine Discharge		2B
P10	P2.1		2B
P11	Pump output Press.		3B
P12	Engine Fuel Nozzle Pressure		3B
P13	Metering Valve Head		3B
ΔP/P	Pressure Ratio	Bendix PRA-A2	14
Arithmetic Card	2 multipliers, 2 dividers, 2 square rooters		1B
N1 Digital Words	Frequency		2 & 4
N2	Frequency		6 & 8
		Electro	
N1 Voltage	Frequency	Magnetic	10
N2		Pulse	10

9 variable outputs to IBM 1800 (Selected by Patching variable to an output circuit)

TABLE 1 -- EK 15 CIRCUITS

Patch Panel

Figure 10 is a layout illustrating the patch panel incorporated in the EK 15 to provide flexibility in circuit use. To allow for growth and unknown use, points are available for all pressure sensor and position circuits. This eliminates the need of reserving circuits for some definite purpose. Patching is available as discussed in the following listing.

- Digital to Analog Converter (12 Points) -- Twelve lines are available from the computer terminal. These are patched double for use with a position and for instrument output or a simulation signal. More than one line can be attached to any computer output point. The instrumentation may be through any instrument out or through simulation 17 or 18.

- Position Request (12 Input Points) -- Any DAC input signal can be patched to any position request.

- Torque Motor Voltage (8 Circuits) -- The T. M. voltage is available for input to the stepper motor logic card if it is desired to drive a stepper motor with the position circuit.

- Stepper Motor Logic Input -- There are two stepper motor circuits available. The two T. M. voltage points of a circuit are patched to the two input S. M. logic points.

- Position (12 Points) -- The position result of each of the twelve position circuits is available at the panel for patching to the computer or for use with the arithmetic card.

- LVDT Circuits (3) -- Three positions as generated by an LVDT are available to patch to any of eight position control circuits.

- LVDT Feedback (8) -- If an LVDT is used for position feedback instead of a potentiometer, the LVDT output can be input to any of eight position control circuits. A switch on the control circuit card must be switched to the LVDT position also.

- **IBM 1800 (9)** -- Nine points can be patched to the IBM 1800 through the isolation amplifier card. Any of the points available on the patch panel can be used including instrumentation and the spare input points. If more signals to the computer are desired, jumpers may be used in the instrument cabinet from the signal to the EK 14 input points.

- **Instrumentation Points (11)** -- The four instrumentation in points are through isolation amplifiers on Card 26. The four output points are used primarily for arithmetic card signals or for DAC signals. The two simulation points and the three spares may be used for inputs or outputs.

- **Pressure Ratio (2)** -- Two circuits calibrated for sensor PRA-A2

- Two analog voltage speed points

<u>Pulse Count Circuit Description</u>

Figure 11 is a block diagram illustrating operation of the circuit. The circuit is contained on two Cambion cards. The pulse input is conditioned by a dual amplifier and the pulses are counted by nine J-K flip flops. The number of pulses to be counted are set by nine switches connected to the Q and Q not outputs of the flip flops. When the selected number is reached, logic stops the clock pulses which are being counted by a digital counter of 15 bits. The output of the hold register is converted to the IBM 1800 logic by dual inline amplifiers.

The clock count is proportional to the time required for the set number of input pulses. Thus the output is proportional to the reciprocal of speed.

The following table indicates the method of setting the count number N_c.

SWITCH NUMBER

	0		1		2		3		4		5		6		7		8	
Logic	Q	$\bar{Q}$	Q	$\bar{Q}$	Q	$\bar{Q}$	Q	$\bar{Q}$	Q	$\bar{Q}$	Q	$\bar{Q}$	Q	$\bar{Q}$	Q	$\bar{Q}$	Q	$\bar{Q}$
Number	1	0	2	0	4	0	8	0	16	0	32	0	64	0	128	0	256	0

$O = \bar{Q}$ for $Q > N_c - Q_a - Q_b$

$O = \bar{Q}$ for $Q > N_c - Q_b$

$O = \bar{Q}$ for $Q > N_c$

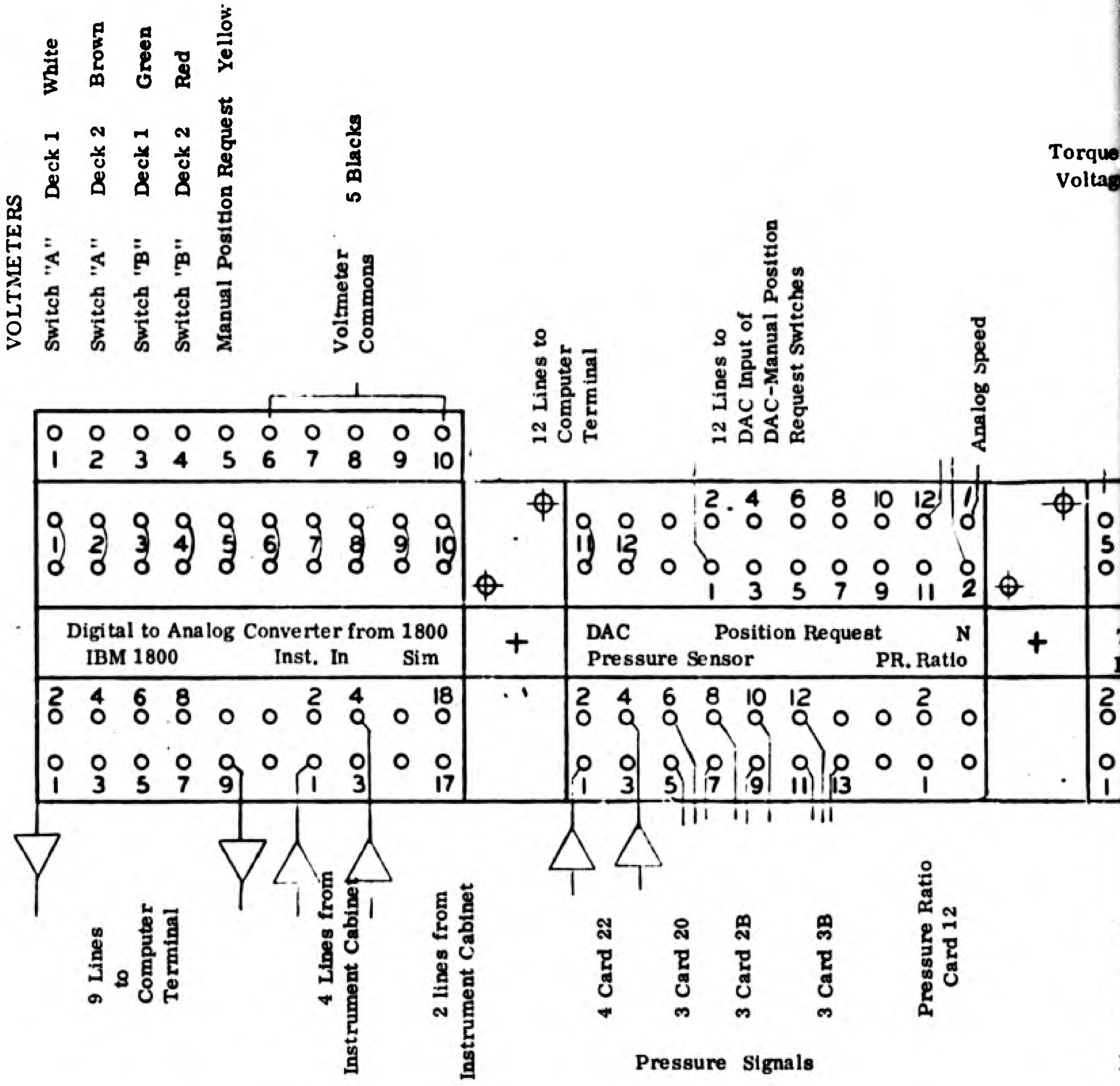
VOLTMETERS
Switch "A" Deck 1 White
Switch "A" Deck 2 Brown
Switch "B" Deck 1 Green
Switch "B" Deck 2 Red
Manual Position Request Yellow
Voltmeter Commons 5 Blacks
12 Lines to Computer Terminal
12 Lines to DAC Input of DAC-Manual Position Request Switches
Analog Speed
Torque
Voltag
Digital to Analog Converter from 1800
IBM 1800
Inst. In
Sim
DAC
Position Request
N
Pressure Sensor
PR. Ratio
9 Lines to Computer Terminal
4 Lines from Instrument Cabinet
2 lines from Instrument Cabinet
4 Card 22
3 Card 20
3 Card 2B
3 Card 3B
Pressure Ratio Card 12
Pressure Signals

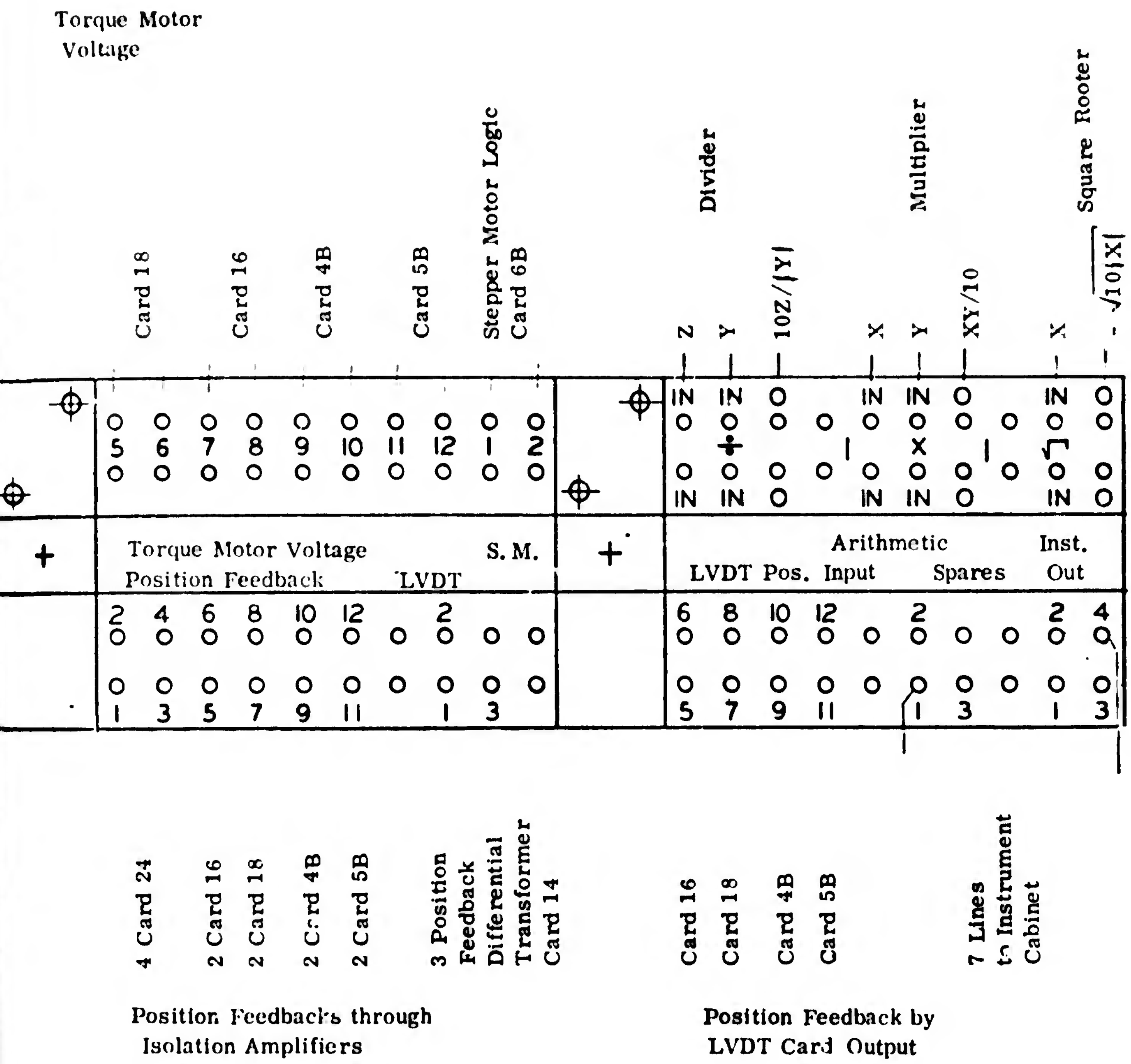

Figure 10 -- Patch Panel Layout

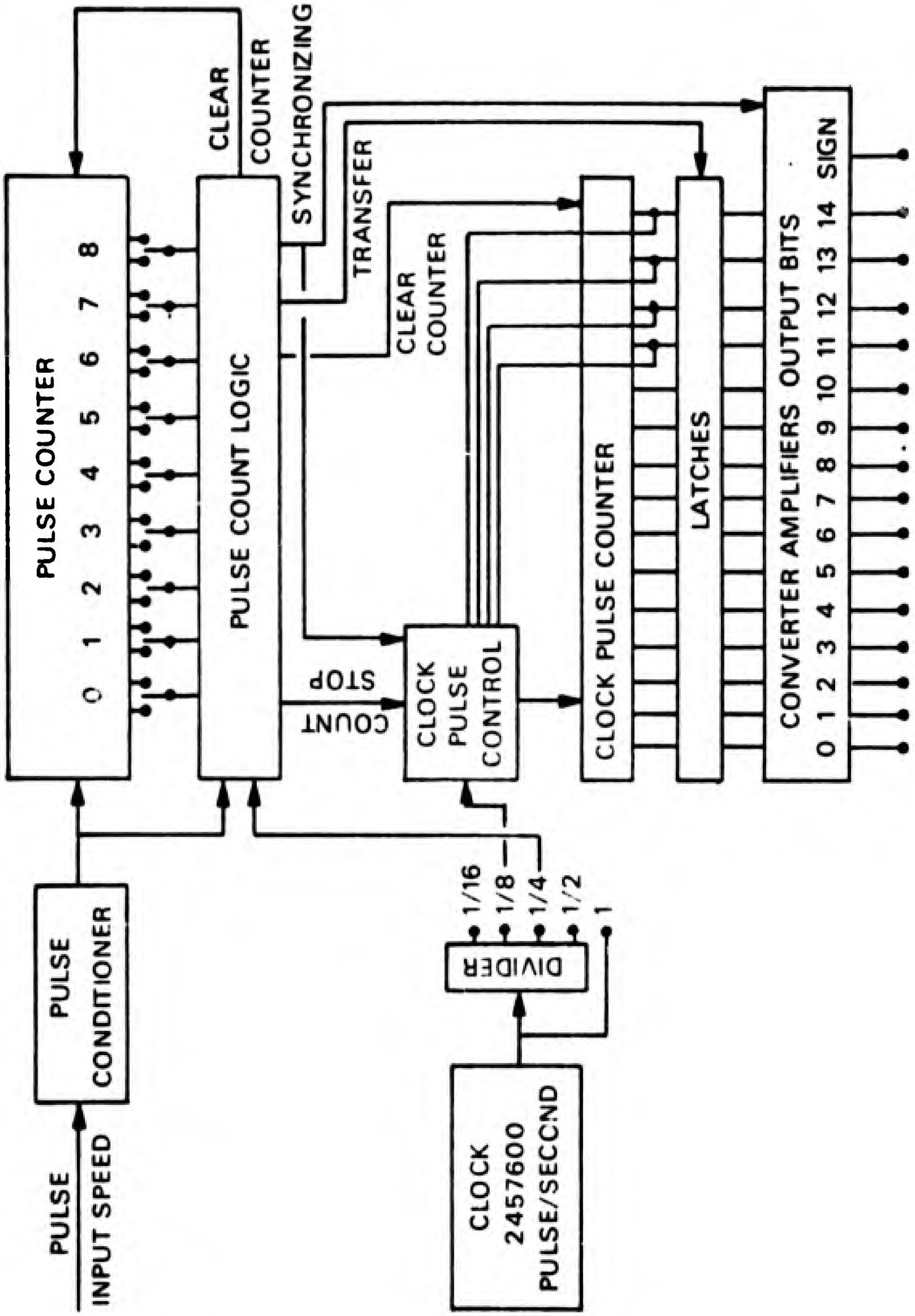

Figure 11 -- Digital Speed Signal

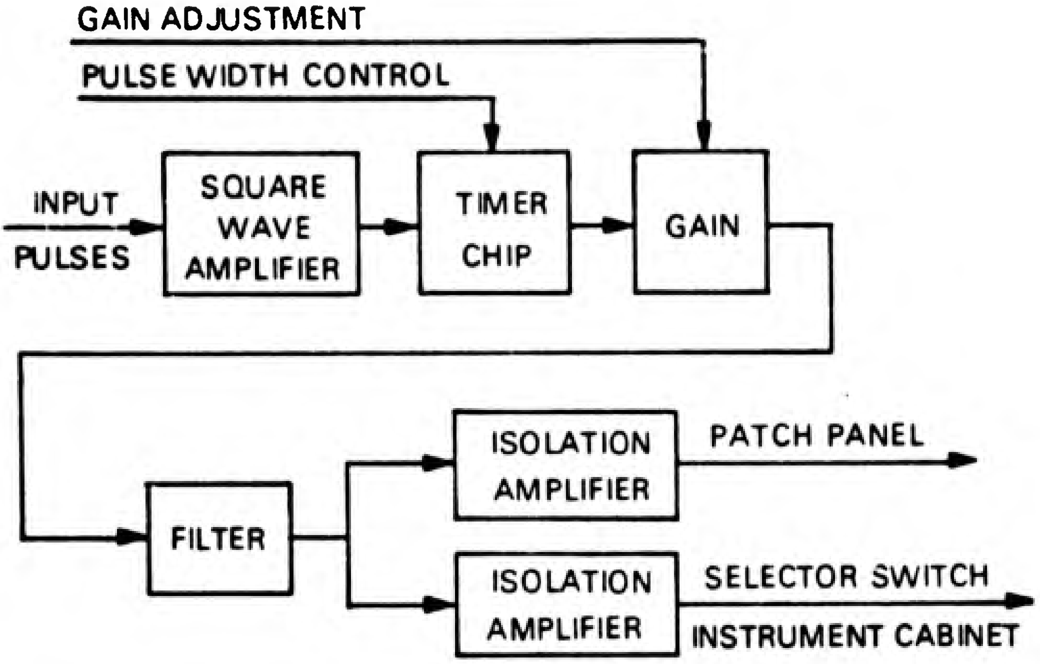

Figure 12 -- Block Diagram Frequency to DC Voltage Converter

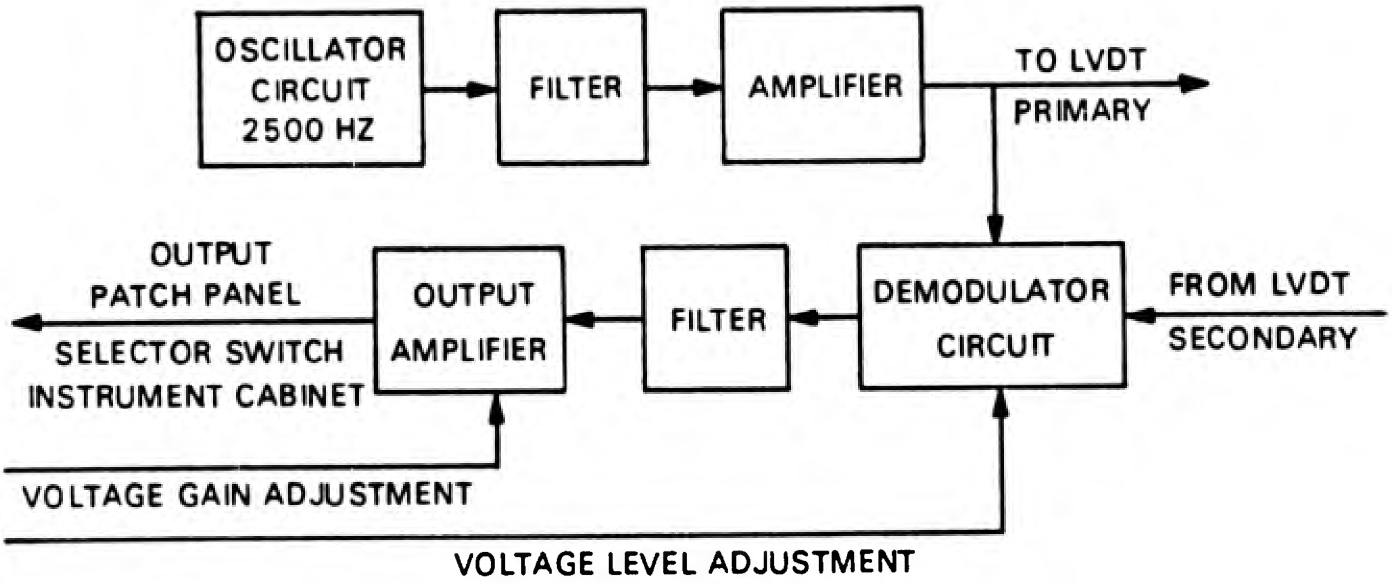

Figure 13 -- Block Diagram LVDT Circuit

Figure 13 is a block diagram of the circuits. An oscillator chip is used to generate 2500 cps square wave which is filtered and amplified to produce an excitation sine wave. This circuit is common to the three LVDT circuits. This excitation is mixed with the secondary of the LVDT, rectified and filtered to obtain a negative DC output. The gain of the output is adjustable to obtain an agreement with voltages used for the position control circuits. The voltage level of the output is adjustable by the zero adjustment. The linear range of the circuit does not extend to a zero output, consequently, the output is between two negative voltages. The output is to the patch panel for pacing to the position circuits, to the selector switch for monitoring on a voltmeter and to the instrument cabinet for recording.

These circuits are designed for use with a Schavitz PCA-117-200 LVDT. Some tayloring may be required for other LVDT's.

Pressure Ratio Sensor Circuits

Two circuits are available for use with the Bendix PRA-A2 pressure ratio sensor. These circuits are similar to the LVDT circuits. The frequency is generated at 7500 cps for the position sense of the sensor armature. The excitation voltage if fed back through a level adjustment and mixed with the feedback signal at the input amplifier. The excitation is also mixed at the output amplifier. The output linear range is from -.6 to -5 VDC. A gain adjustment allows change in output voltage. Figure 13 is a block diagram illustrating the circuit.

The DC voltage output is to the patch panel for patching to the IBM 1800 computer, to the selector switch for monitoring on a voltmeter, and to the instrument cabinet for recording.

Position Control Circuits

There are twelve (12) position control circuits. Eight (8) of these, two on each of cards 16, 18, 4B and 5B, contain velocity feedback signals controlled by front panel controls. This velocity feedback may cause instability in high gain circuits. These circuits also include provisions for input an LVDT feedback signal. The other four position controls are on Card 24. These circuits do not contain the controls noted above.

All circuits contain provisions for adjusting the input request relative to the feedback. Feedbacks are negative and inputs are positive. The numerical value of the request can be equal to or several times the feedback. However, the manual inputs have a maximum voltage of +5V. Thus the DAC outputs which may be as high as +10V need be restricted to 5V if the manual input is used for full range selection when the DAC is switched out.

All circuits contain a gain adjustment on the cards and a torque motor current monitor point on the front panel. The voltage of the monitor is 100 times the current. The torque motors saturate at about .010 amperes. The amplifiers at saturation will output about .016 ampere. Thus the voltage will be between about ±1.6 volts from amplifier, saturation to saturation. The two coils of the torque motors are connected in parallel. Thus, if one coil opens, the maximum current will be about .010 ampere, and the monitor will read about 1 volt maximum.

Figure 14 illustrates the features of the position control circuits.

1. Each circuit contains a switch on the front panel to select a manual request from a potentiometer on the front panel or a DAC input from the patch panel.

2. The first ten of the manual position request values can be read on a voltmeter before switching the manual value into the circuit.

3. The input selected can be read through the monitor isolation amplifier and by setting the selector switch to the desired circuit.

4. The input is through an adjustable potentiometer. The feedback of opposite sign is through a resistor. The request may be equal to or a multiple of the feedback.

5. An offset is incorporated to allow for use of torque motors which are mechanically offset from null. The offset is set at zero for the system presently used.

6. The normal feedback is from a potentiometer through an isolation amplifier. This amplifier allows use of high resistance feedback potentiometers.

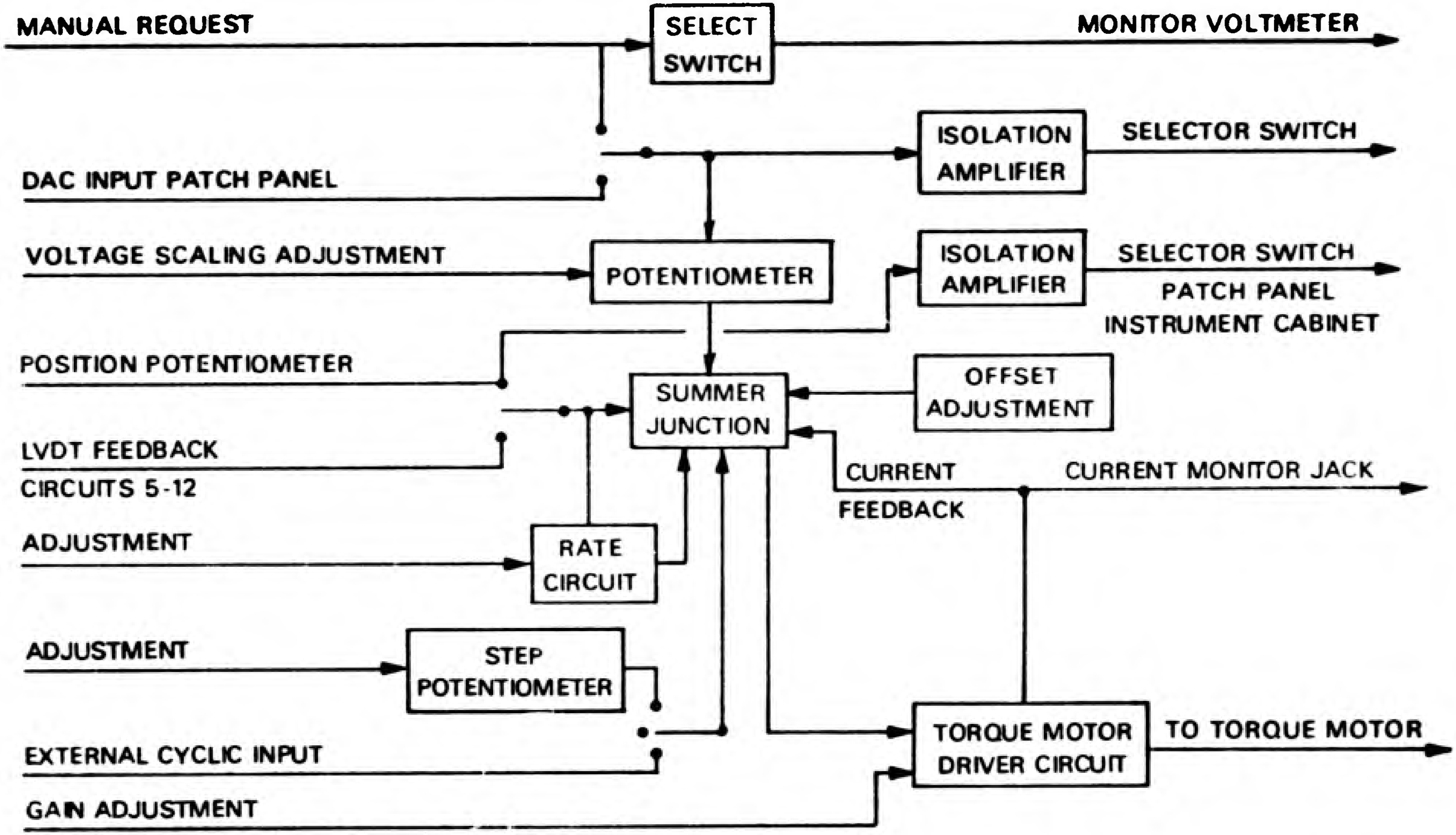

Figure 14 -- Block Diagram Position Control Circuits

7. Circuits 5 through 12 allow an input through the patch panel of an LVDT feedback position. The potentiometer or LVDT is selected by a switch on the card.

8. The feedback is output to the selector switch, the patch panel and to the instrument cabinet through an isolation amplifier.

9. Each circuit is provided with a step input and a cyclic input. Either of these two inputs is selected by a normally open switch located under the front edge of the card file. There is one step potentiometer and one cyclic input for use with all circuits.

10. Circuits 5-12 contain a rate feedback. This input is used to obtain a velocity proportional to position error. The adjustment is located on the front panel. When velocity feedback is used, the torque motor AC current should be observed and the feedback setting adjusted to obtain near zero AC at steady state.

11. A gain potentiometer is contained in the circuit of the output amplifier.

12. The output from the amplifier is through the torque motor through a 300 and a 100 ohm resistors. The current is monitored across the 100 ohm resistor. The torque motor points are also connected to the patch panel for use with the stepper motor circuits.

Pressure Sensor Circuits

Pressure sensor circuits are designed for strain gage type transducers manufactured by C.E.C. The thirteen circuits are contained on four Cambion wire wrapped cards. Three circuits on each card in positions 20 (5, 6 and 7), 2B (8, 9 and 10), and 3B (11, 12 and 13), and four circuits on card in position 22 (1, 2, 3 and 4). These circuits are basically the same although there are some differences. Figure 15 is a block diagram of the circuits.

Connections for all circuits are the same. Negative five volts is used for excitation. Excitation and return are attached to the voltage busses near the cards. Legs of the strain gages are input to 5558 type amplifiers. The difference between the leg voltages is amplified and the amplification is adjustable. A second stage of amplification is used before input zero adjustments. Differences between the circuits are after this point.

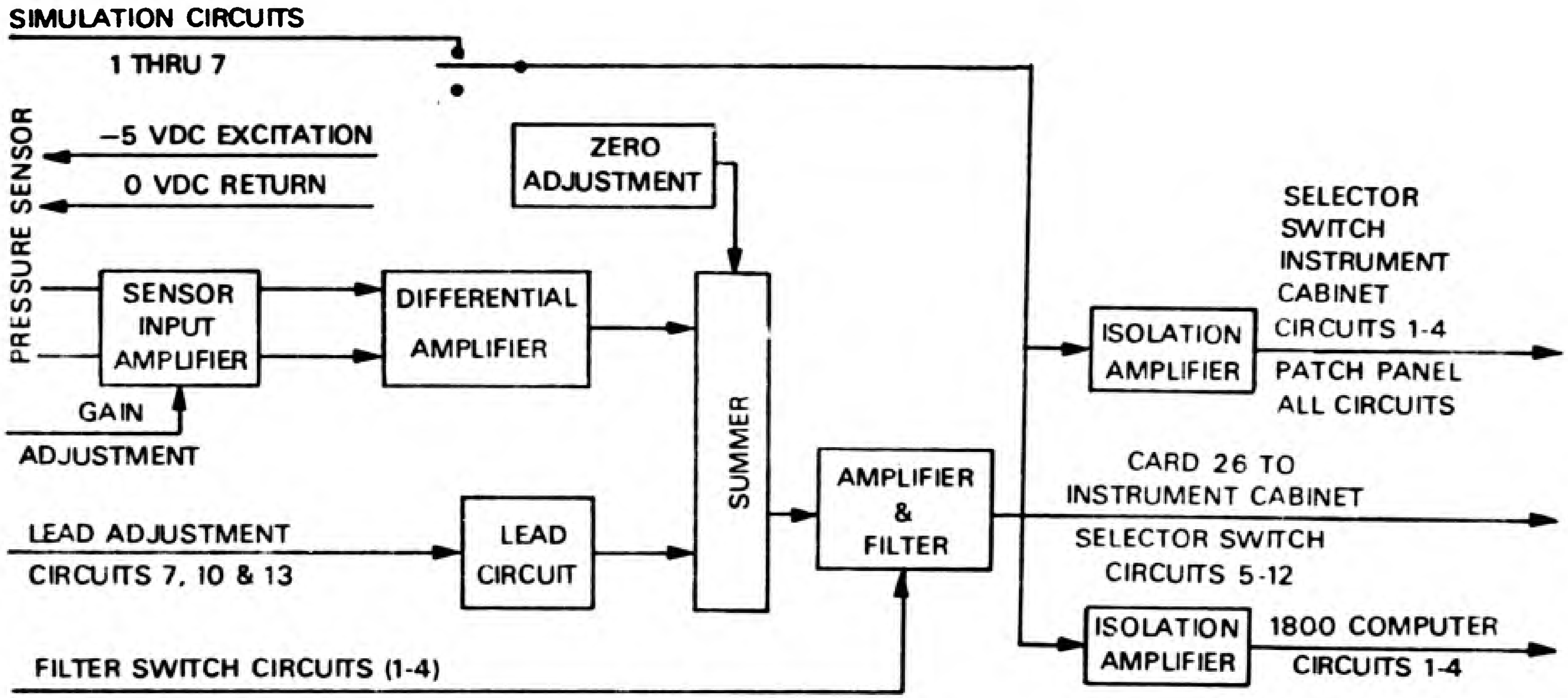

Figure 15 -- Block Diagram Pressure Sensing Circuits

1. Circuits 1 through 7 have simulation inputs before the final output isolation amplifiers. The switch to disconnect the simulation signal is in the instrument cabinet.

2. Circuits 7, 10, and 13 contain adjustable lead circuits. These leads may be used to remove lags in the engine sensing connections.

3. Circuits 5 through 13 have an instrument output through card 26 isolation amplifiers.

4. All circuits are output to the patch panel. Circuits 1 through 4 have lines to the computer terminal. Circuits 5 through 13 must be patched to the computer through card 26.

Arithmetic Circuits

There are six arithmetic circuits. These circuits use an "Analog Devices" multiplier chip in circuits shown by Figure 16. The two multipliers yield a product equal to xy/10. The two dividers require a negative denominator and yield a quotient equal to 10 n/d. The two square root extractors require a positive input and yield a square root equal to $\sqrt{10Z}$. The circuit contains absolute value converters as required for the square root function and negative of the absolute value for the dividers.

Stepper Motor Control Circuits

The system is to contain circuits which might be useful for control of geometry such as turbine stators or compressor exit guide vanes. Since these controls are undefined, two stepper motor control circuits are included in the system to demonstrate this type control. Stepping frequency and direction control for both circuits are included on card 6B and the motor voltage outputs are included on cards 7B and 8B.

Figure 17 is a block diagram of the direction and stepping rate control and the stepper motor circuit. This circuit is used with a torque motor driver position control. The driver voltage is patched to the input of either of these two circuits on card 6B. Direction of movement is dependent on whether the torque motor current generated voltage is positive or negative relative to common. The signal is input to an absolute value circuit. The magnitude of signal controls the oscillation rate of a pulse generation circuit. The pulse, direction and limit

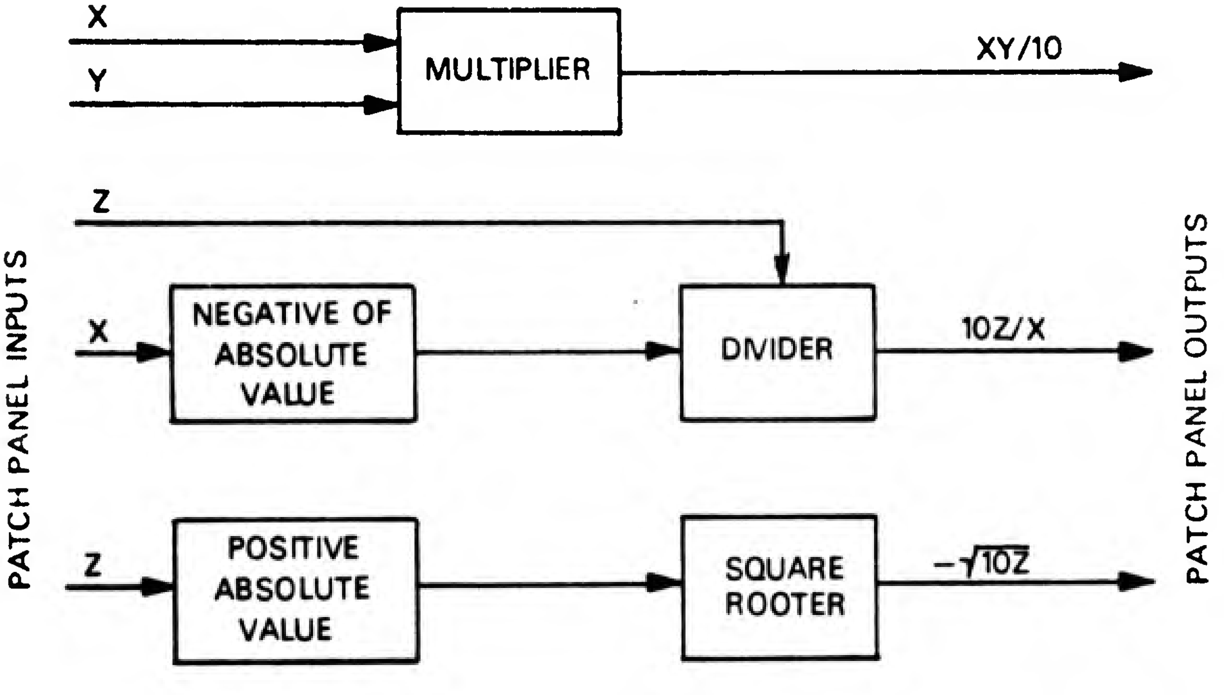

Figure 16 -- Block Diagram of Arithmetic Circuits

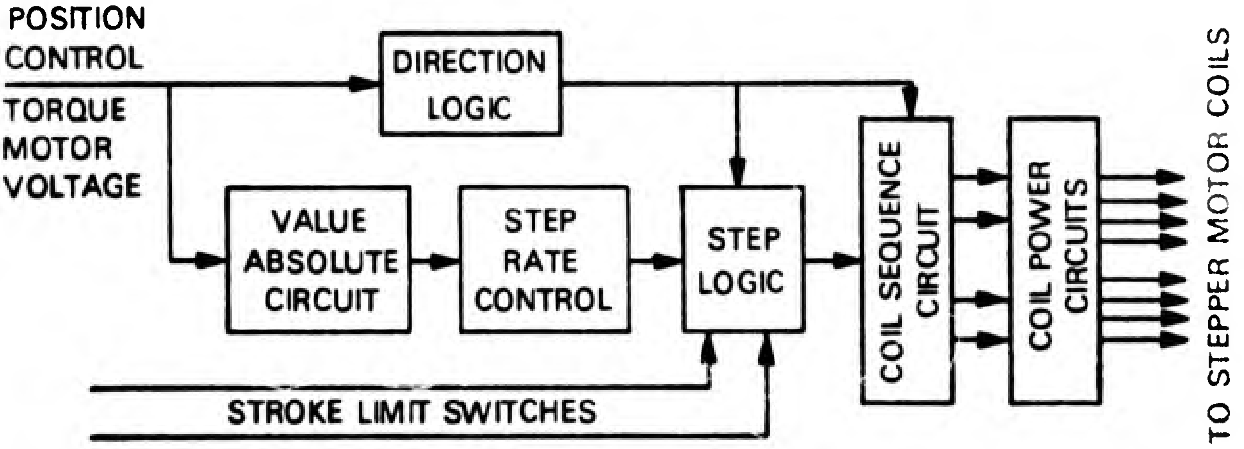

Figure 17 -- Block Diagram of Stepper Motor Control Circuits

switch signals of the control mechanism are fed into a logic circuit to provide the pulse frequency to the stepper motor control circuit. Direction and rate (clock) are fed into the control gates to establish sequence and rate of stepper motor coil excitation. The output of the logic gates provides switching of the stepper motor power circuits.

EK 18 CHASSIS DESCRIPTION

Figure 18 is a photograph of the front of the EK 18 chassis. Figure 19 is a photograph of the rear of the chassis showing connectors and circuit cards. Circuits of this chassis are on 13 Cambion wire wrap cards. Circuits included are listed by position number below.

Card Position	
2	Digital Adjustment Selection
4	Digital Computer Value and Converter
6	Binary to BCD converter
8	Spare
10	Miscellaneous Circuits
12	Filter and Lead-Lag
14	Power Request and Safety Circuits
16	Accelerometers
18	Temperature Output
20	TD, Turbine Discharge Temperature
22	TC, Turbine Inlet Temperature
24	TB, Compressor Discharge Temperature
26	TA, Compressor Inlet Temperature

EK 18 Circuits

Circuits of Cards 2, 4 and 6 are used to change the IBM 1800 adjustment numbers and to convert the numbers for readout. The readout is by equivalent voltage without sign and by decimal value of the computer number.

The card in Position 8 has no wiring. One MS3102A-27-20 connector is available for inputs and outputs for additional circuits on this card.

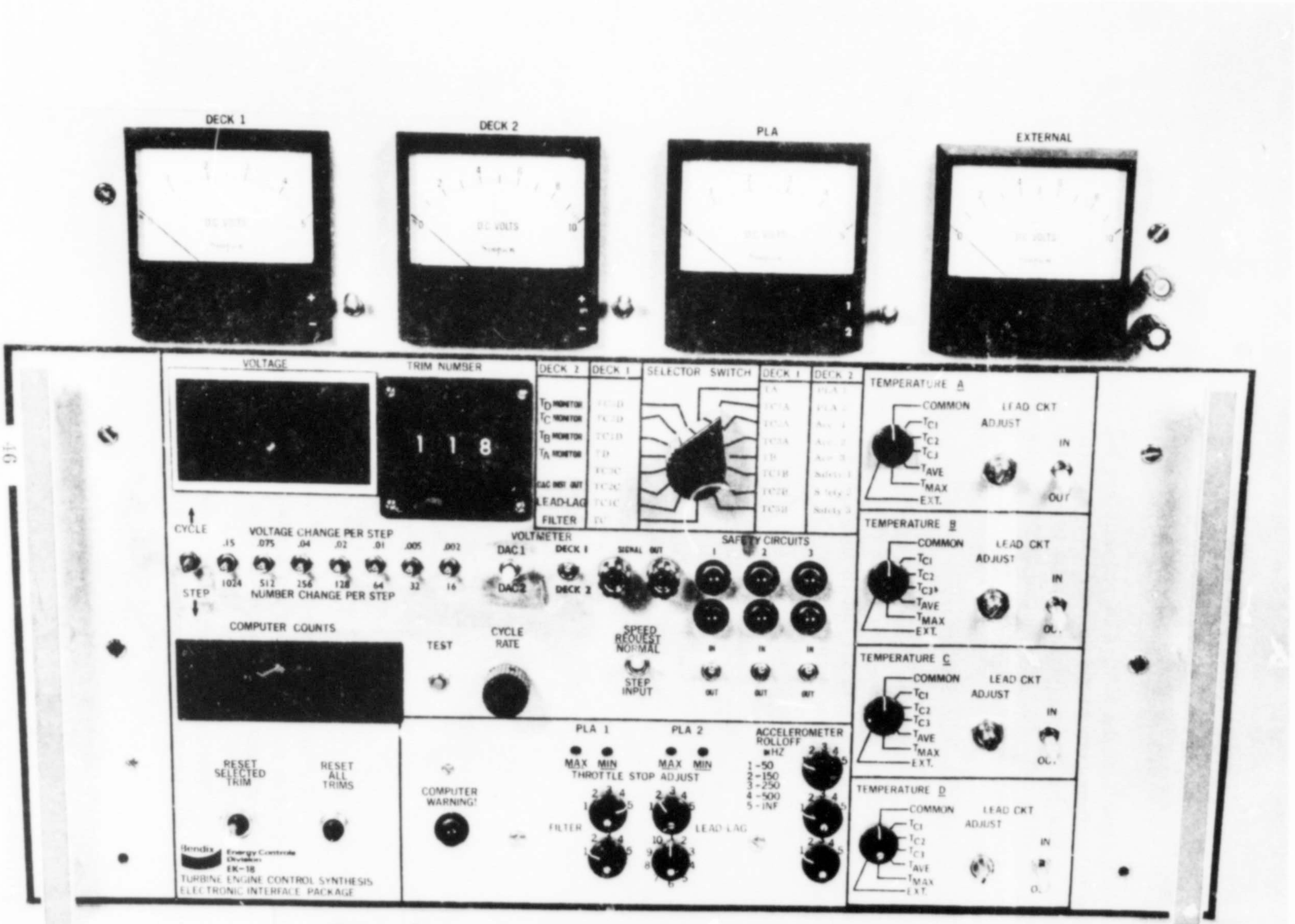

Figure 18 Front View of EK 18 Chassis

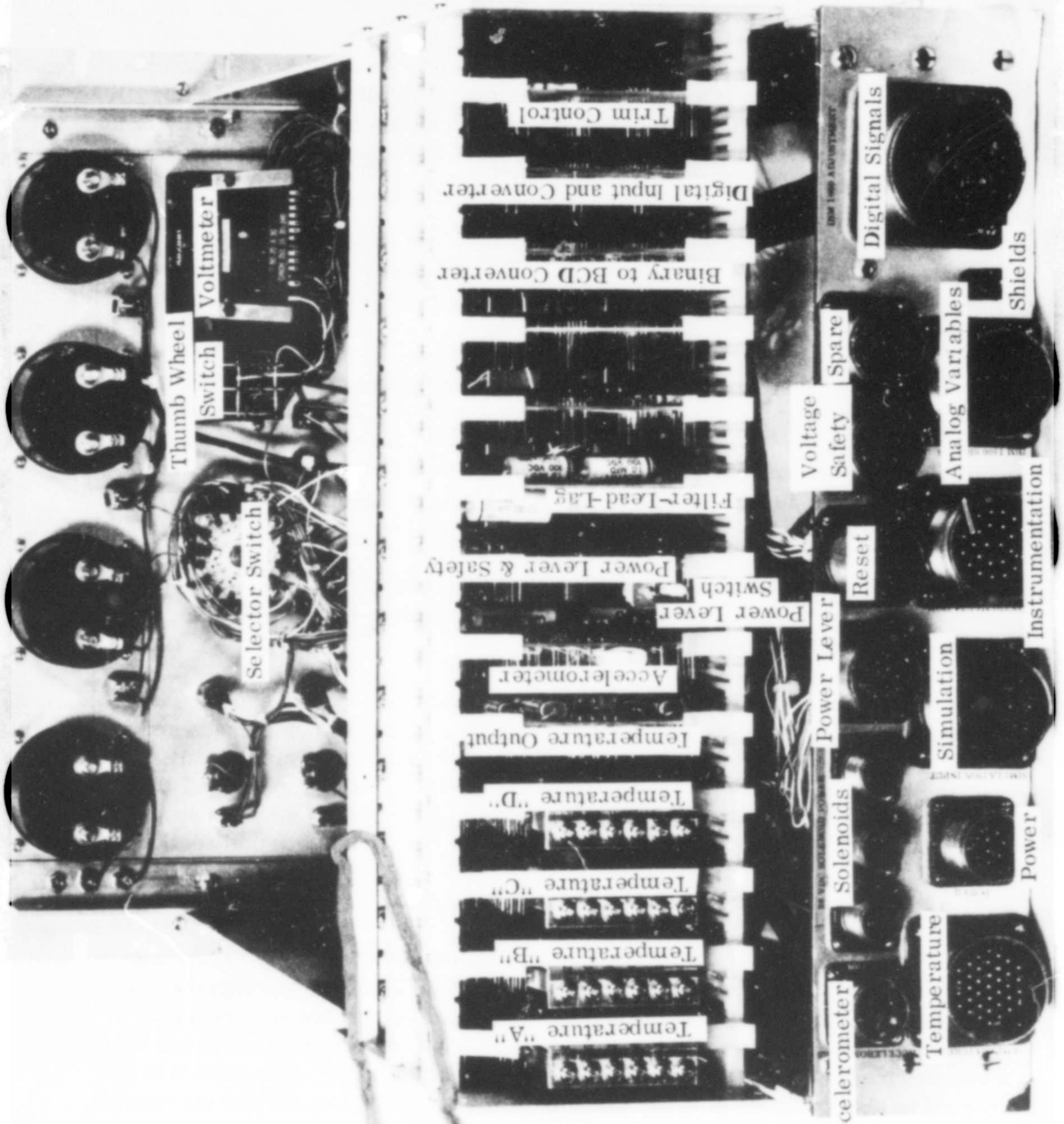

Figure 19 Rear View of EK 18 Chassis

The card in Position 10 contains safety circuits from EK 14 and EK 15 chassis power, a circuit to output the value of the called computer number to the instrument cabinet,and two computer logic inputs to equate a computer variable to a DAC channel.

The card in Position 12 contains a second order filter and a lead-lag circuit. Effects of these circuits can be adjusted as may be desired to condition a variable. The input is through the instrument cabinet and the output is connected to the IBM 1800 terminal.

Two safety circuits and two power lever circuits are included on Card 14. Safety circuit "one" cuts off engine fuel flow if any interface voltage is lost. Safety circuit "two" reduces fuel pump output pressure if an accelerometer output exceeds a preset level. Either power lever is normally through the PLA 1 circuit by selection of the step switch. Both circuits may be input to the IBM 1800 computer by properly positioning the switch on the card.

Three accelerometer circuits are included on Card 16. These circuits are used as a safety control in event of excessive engine vibration. Also,'the vibration level can be monitored.

Four temperature circuits with three thermocouples each are included. The outputs of all four circuits are from Card 18. Thermocouple inputs and conditioning circuits are on Cards 20, 22, 24, and 26. These circuits are designated A, B, C, and D. A and B are calibrated to 1024°R and C and D are calibrated to 3277°R. Any engine station in these ranges can be sensed by the circuits. Description of the various circuits is presented in this section.

Chassis Operation Features

Figure 18 is a photograph of the chassis front showing the various controls. Four voltmeters are attached to the chassis to monitor signals and make a quick check of circuit operation. The poles of the selector switch are connected to the first two meters. The first Deck 1 is used to check operation of each thermocouple and the output of the temperature circuit. The second meter is used to check operation of the variable circuits as noted at the selector switch. The third meter is used to monitor power lever settings. The fourth meter is available to monitor any signal which may be input to the jacks.

The left-hand part of the chassis is used for the IBM 1800 program control and monitoring. A computer number is selected by the thumb wheel switch. The value corresponding to the selected number is output to the chassis. This value is read in equivalent volts, 5 volts = 32, 767 counts, on the voltmeter beside the switch and by counts in decimal form on the numitron readout display. If it is desired to change the number, a change switch is moved up for increase in number and down for a decrease in number. While holding the change switch, the switch on the left is moved down for a single value change or up for more than one change. The cycle rate is set by the cycle rate adjustment. If it is desired to reset the number to its original value, the reset switch on the left is pressed. If several numbers have been changed and it is desirable to reset them all, the second reset switch is pressed.

The switch designated DAC 1 - DAC 2 is used to select a computer number for output through some assigned DAC channel selected in the computer program. The desired number is selected by the thumb wheel switch and the DAC 1 - DAC 2 switch is moved up or down and returned to center to output through a DAC as programmed by the computer. The value of this number at every computer cycle will be output until a different number is selected.

The Deck 1 -Deck 2 switch is used to select the deck of the selector switch to be output at the signal out jack.

Safety circuits are monitored on the chassis. If the red lights are on, the circuit contains an error. When the green lights are on, the system is safe for operation. The circuits can be switched in or out. Circuit 3 is not assigned any function in the system at this time.

The computer warning light comes on if the system fuel valves are not properly set for the operational mode or the computer program is not in operation. DAC 0 must be near zero or negative for the light to be on when the program is not in operation.

Selections and adjustments are available for the power levers, the filter-lead-lag and the accelerometers. Use of these adjustments are discussed when the circuits are described.

Control of the four temperature circuits is accomplished on the front panel. Seven outputs from each circuit can be selected and a lead circuit can be selected and adjusted. Use of these controls are discussed during description of the circuits.

Computer Variable Call Up

Figure 20 is a block diagram of the circuit used to call up a computer variable either a trim, an input variable or a computed number. The three switches are used to call units, tens, or hundreds in binary coded decimal form. These signals are converted to binary form by the logic chips. The binary form is output to the IBM 1800 Terminal through operational amplifiers. A logic one in the IBM 1800 is a positive voltage. A logic zero is a negative voltage less than -6 VDC.

Figure 20 also shows the trim change circuitry. The called computer number, if a trim number, can be changed by the circuit illustrated. The value and direction of the change is selected on a change switch. When the switch is moved up or down a positive voltage is applied at the positive input an operational amplifier. This causes a positive saturation of the amplifier and the voltage is applied to the computer. The voltage applied to the sign bit depends on whether the switch is up or down. If up, the change is added to the computer number. If down, the number is subtracted from the computer number.

The interrupt switch must also be moved to effect the change. The interrupt is normally negative and causes one change each time the interrupt changes from negative to positive. When the switch is pressed down, one change occurs; when the switch is raised, the oscillation circuit causes the interrupt to cycle as long as the switch is held.

The outputs from the card are designated by numbers 0 through 16. The trim change is on 0 through 6, and the call numbers on 7 through 14. Output 15 and 16 are not connected now. If desired, the bits can be shifted at the computer terminal by dropping zero so the change would allow an increase in called numbers from 254 to 508. The output 15 would be connected.

Computer Value Converter and Readout

Figure 21 is a block diagram of the IBM 1800 computer output read and conversion circuit. A sixteen bit word including sign is output on a digital out terminal. A computer logic one causes the bit to conduct yielding a zero input to the Nand gate. Thus a logic one or a voltage exists at the output of the Nand gate. A zero or a positive voltage corresponding to zero or logic one in the computer is output to the binary to decimal coded decimal converter. The converter consists of 16 SN 74185 A logic integrated circuits. Output of the converter is input to numitron drivers.

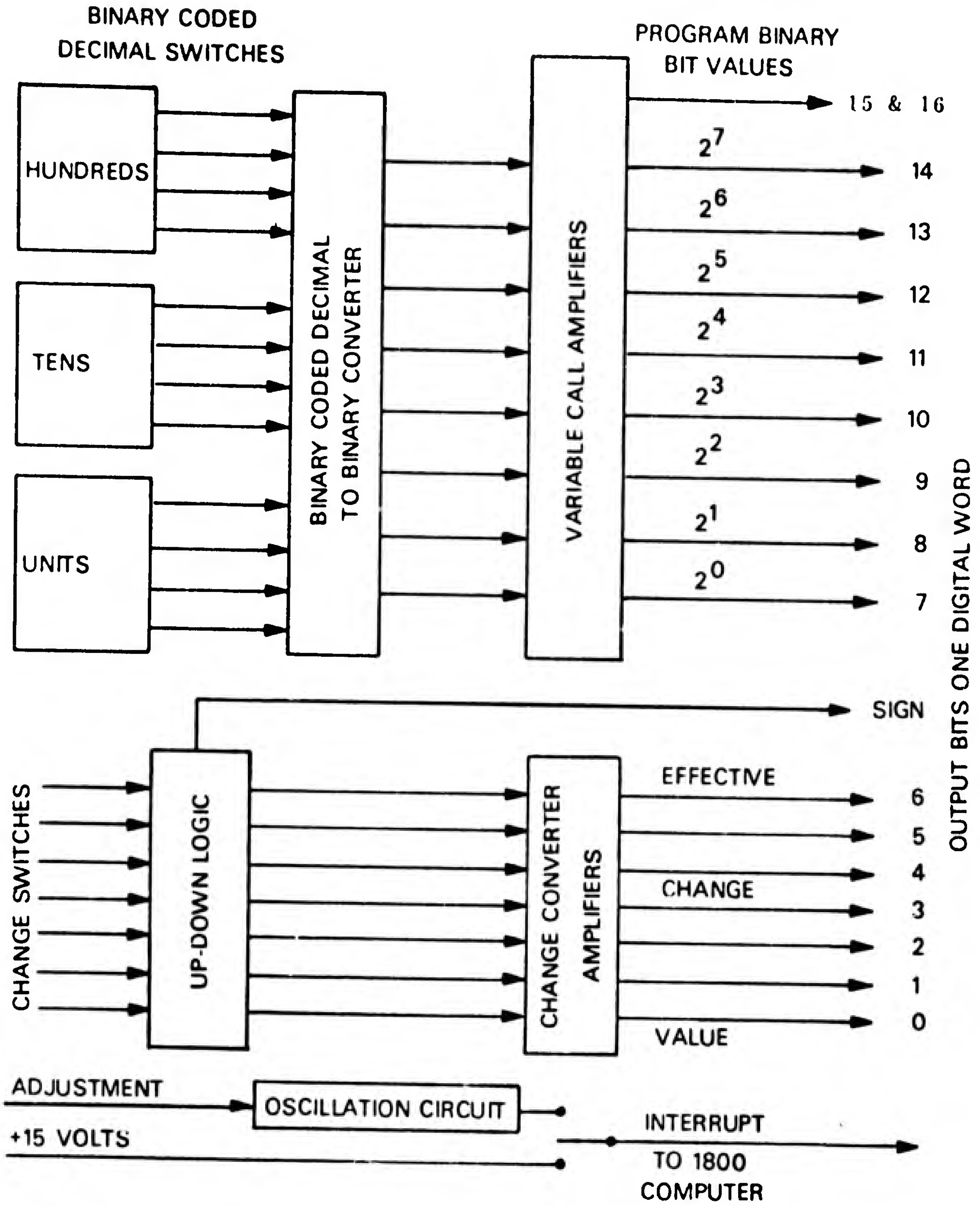

Figure 20 -- Block Diagram of Variable Number
Selection and Change Circuitry

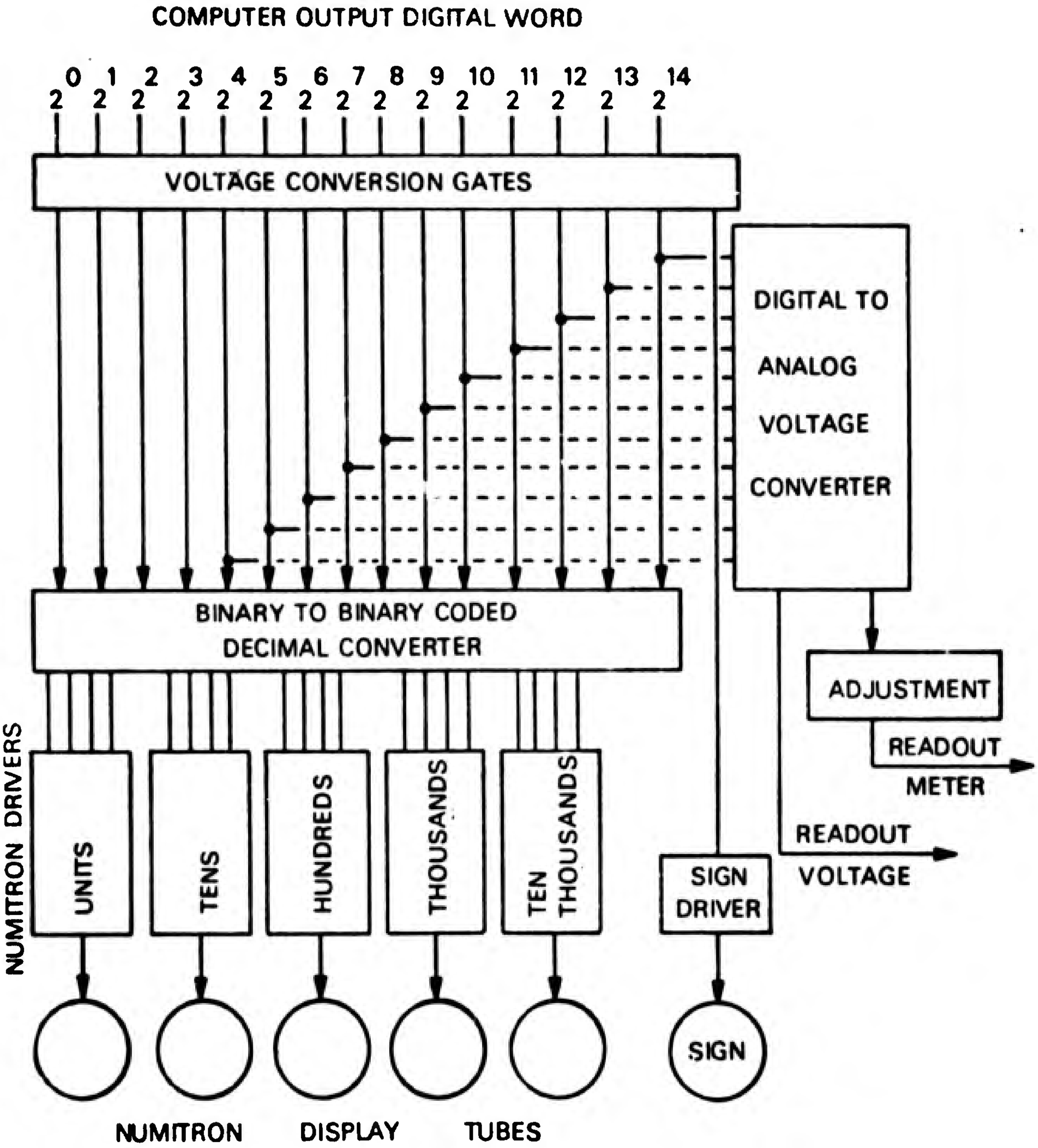

Figure 21 -- Block Diagram of Computer Number Conversion and Readout Circuit

The computer value of the called number is read out on the five numitron tubes. The sign tube is activated by a transistor circuit. The drivers and tubes are mounted on a cutoff Cambion card which is mounted behind the front panel.

Higher order bits are fed to an "Analog Devices" DAC 12QZ to convert the bits to an analog voltage. This device outputs value but not sign. Output of the DAC 12QZ is divided down for input to an "Analog Devices" voltmeter. The meter is used to read the counts value in equivalent volts of 5 volts equal 32,767 counts. The output is adjusted by the potentiometer shown. The output of the DAC is also output to card 10 through an isolation amplifier to the selector switch and to the instrument cabinet for recording the value of the called number.

Miscellaneous Circuits

The cards in position 10 and 12 contain logic, computer control and safety circuits. Figure 22 is a block diagram illustrating function of these circuits. Two circuits are used to obtain outputs to the computer terminal. The computer is programmed to output the variable selected by the thumb wheel switch to a DAC channel when the DAC 1 - DAC 2 switch is moved up or down as programmed.

A warning light driver circuit is also included on the card. This circuit is activated by the DAC 0 voltage. DAC 0 is used for the fuel request and the computer is programmed for a negative voltage if the fuel system valves are not in the proper position for the mode. The light comes on when the fuel request becomes negative.

Two reset circuits are included on the card. If a power signal is lost or the throttle is pulled into cutoff, all adjustments are reset. If an accelerometer setting is exceeded, the adjustment being called is reset. The adjustments may be reset by use of either switches on the chassis or by remote switches at the ends of cables.

The EK 15 and EK 14 power supplies are fused separately from the EK 18 supplies. Circuits were added to provide for sensing any fuse failure and the output is to the safety circuit of card 14.

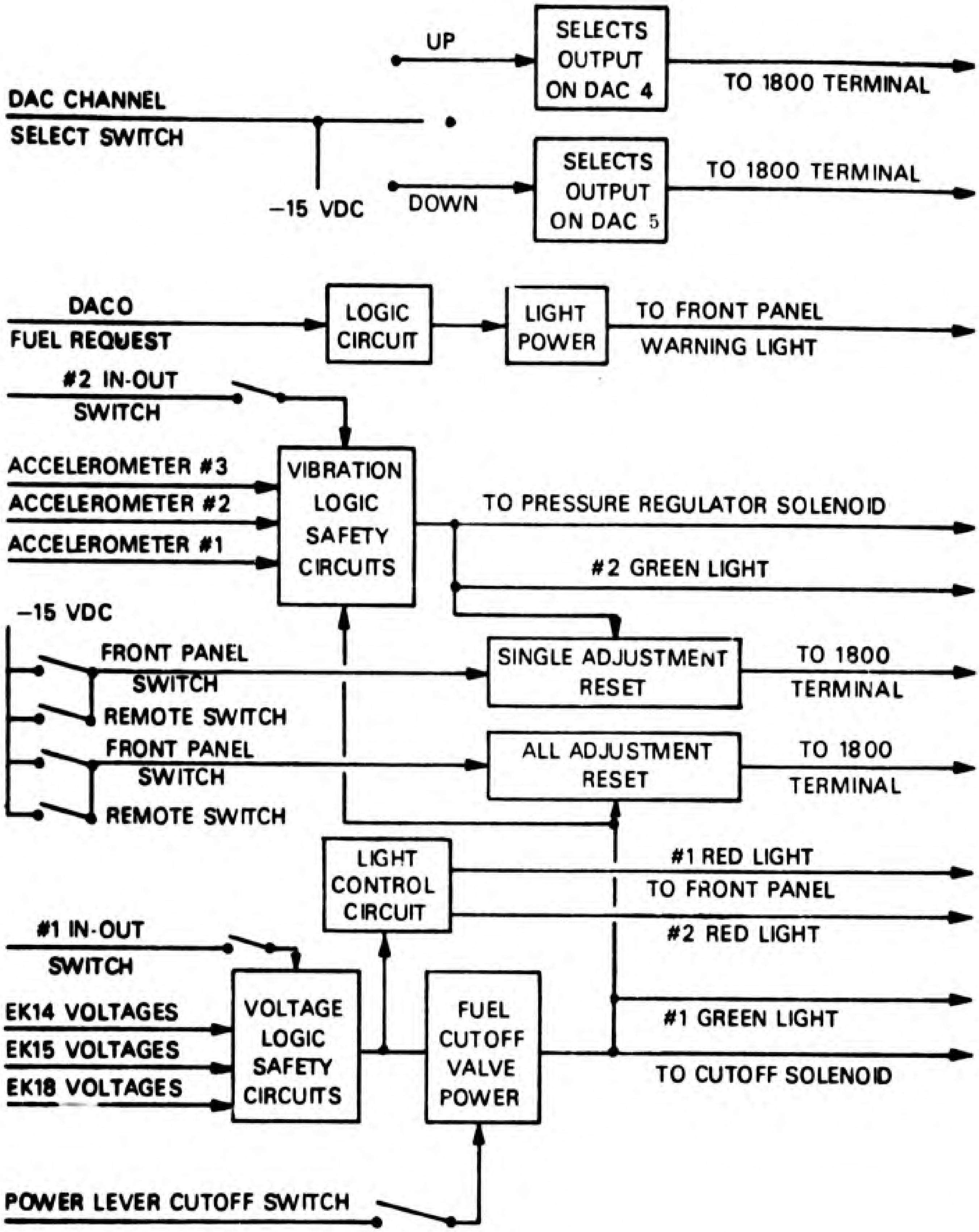

Figure 22 -- Block Diagram of Miscellaneous Circuits

The two safety circuits operate to cut off or limit fuel flow to the engine. If any power supply is lost the fuel cutoff valve solenoid is de-energized. If the 28 VDC is available, the three red safety lights come on when any other power is lost. With safety circuit 2, the solenoid in the nitrogen pressure control line is de-energized if any of the three accelerometers exceed a preset value.

Power Request

Power request circuit is shown by Figure 23. The circuit is on card 14. In addition,a regulated five volts power supply was added to the card. The five volts are used for temperature offset to null out the 150° F cold box temperature and for the small digital voltmeter reference.

Two power levers are mounted on the operators console. Each of the levers rotate a potentiometer which has an adjustable high negative voltage at one end and an adjustable low voltage at the other end. The voltages are adjustable by trim potentiometers accessible at the front panel of the chassis. Power lever volts are fed to the card. Each voltage is output through an isolation amplifier for power request monitoring. A switch on the card can be used to obtain independent outputs to the computer or combined output to the computer through a select circuit. When the switch on the card is in the step position, PLA1 output to both the computer and instrument cabinet is either PLA 1 or PLA 2 depending on the position of the front panel switch.

The select circuit requests either PLA1 or PLA 2 by the step switch on the chassis. Normal position is up requesting PLA1. The step is down requesting PLA 2. PLA 2 lever and PLA 1 lever are interlocked so PLA 1 position is always greater than the PLA 2 position. The voltage setting of PLA 2 should not exceed (be more negative than) PLA 1.

Filter-Lead-Lag

For many control functions it is necessary to provide a lead circuit to obtain rapid response of the control loop. The signal, however, may be rather noisy and the lead would have undesirable values. However, if the signal is first filtered, a useable signal can be obtained with the lead. Figure 24 is a block diagram of filter-lead-lag circuit of Card 12. The controls for the filter and the lead-lag are on the front of the chassis.

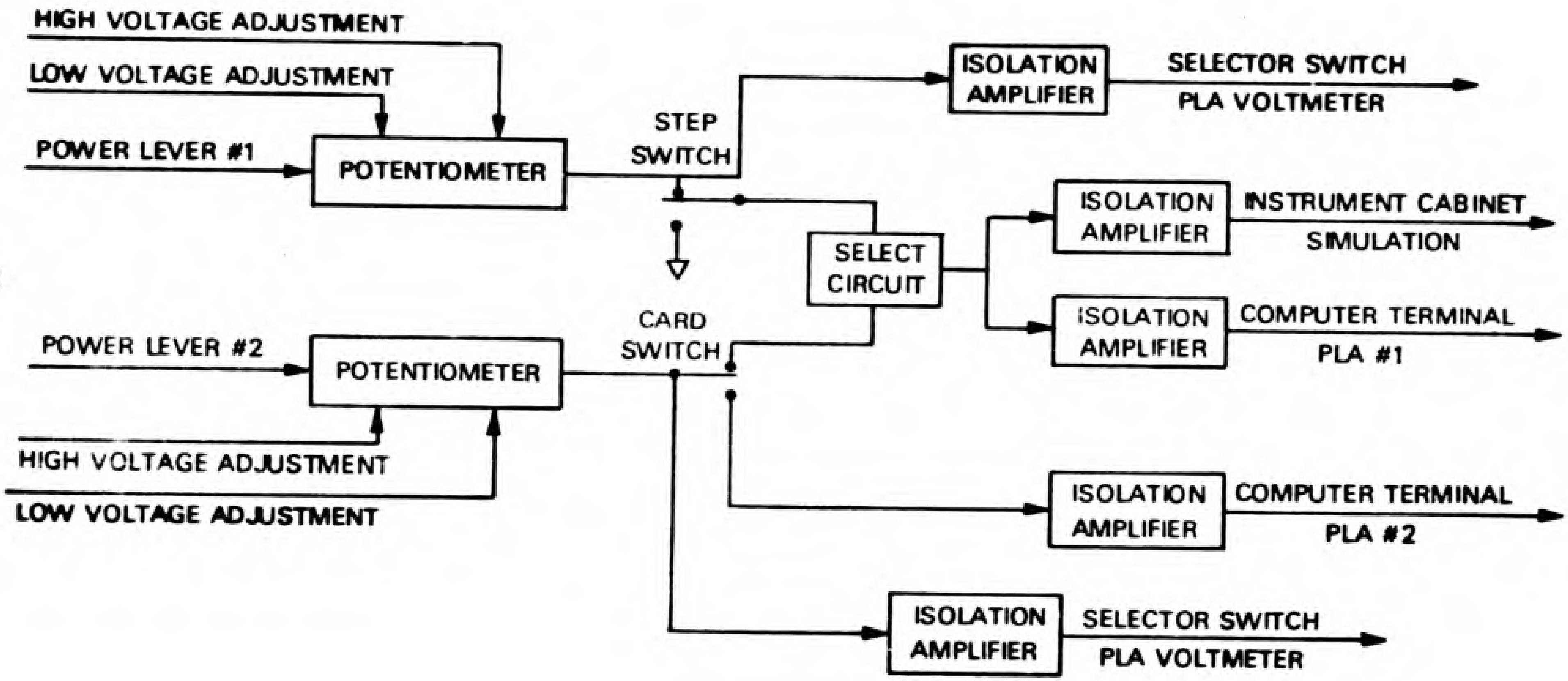

Figure 23 -- Block Diagram Power Lever Circuits

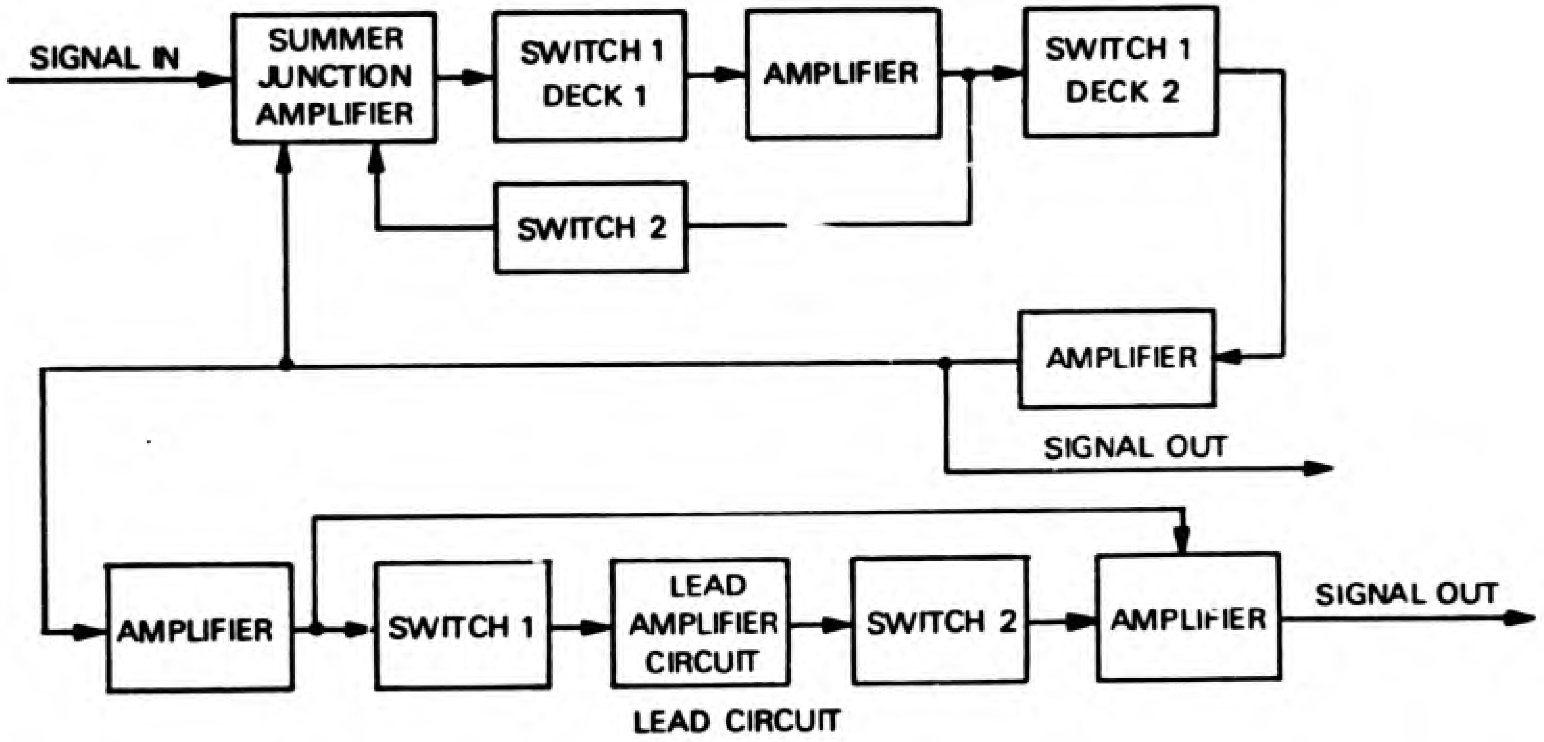

Figure 24 -- Block Diagram Filter-Lead-Lag Circuit

The filter has the characteristics expressed by the following equation:

$$E_{out}/E_{in} = \frac{1}{(S/W)^2 + (2S\ \zeta\ W) + 1}$$

$W = 2\pi f$; ζ = damping factor.

Setting of the switches, yields the results shown by the table.

SWITCH 1

Position	f (Hz)
1	1.4
2	2.0
3	4.0
4	8.0
5	16.0

SWITCH 2

Position	ζ
1	.20
2	.275
3	.40
4	.55
5	.80

The lead-lag has the characteristics expressed by :

$$E_{out}/E_{in} = (1 + \alpha\tau S)/(1 + \tau S)$$

Lead = $\alpha\tau$ Lag ;   Lag = τ

The lead and lag are controlled by switches on the front of the chassis.

SWITCH 1

Position	f Lag (H_z)	τ Lag (Sec.)
1	.2	.8
2	.5	.32
3	1.0	.16
4	2.0	.08
5	5.0	.032
6	10.0	.016
7	20.0	.008
8	50	.0032
9	100	.0016
10	200	.0008

SWITCH 2

Position	α
1	2.5
2	5
3	10
4	20
5	40

Accelerometer Circuits

Three accelerometer circuits are assembled on card 16. The accelerometers are mounted in three perpendicular planes on an engine flange. Figure 25 is a block diagram of one of the three circuits. The output of an accelerometer is input to an LM 208 high gain amplifier. Output of this amplifier is fed into a gain amplifier and filter. The filter frequency band is controlled by a switch at the front panel. The signal is then rectified and filtered and output through an isolation amplifier for monitoring. The output of the rectifier is compared with a set value at the input of a 741 operational amplifier.

If the accelerometer signal exceeds the pre-set value, the amplifier output is saturated in the opposite direction from normal and the safety circuit causes the nitrogen pressure control valve to be de-energized.

Thermocouple Circuits

Each of the four temperature circuits is contained on one card. Each circuit has three thermocouple inputs as shown by Figure 26. The signals are input to 725 type amplifiers. The circuits are zeroed. Thus at the cold junction temperature, there is zero output. The gain is adjusted to yield one volt per 205 degrees for circuits "A" and "B" and the gain is adjusted to yield one volt per 655 degrees for circuits "C" and "D". The 1800 computer number is ten times °R when 610°R is added to the input value.

The output of the three thermocouples are averaged to obtain an average output from the card. In addition, the three outputs are input to a select high circuit. The sensed temperature must exceed the cold junction box temperature to obtain an output from the select high circuit.

Temperature output circuits are contained on card 18. All four temperature circuits are on this same card. Input to the circuit is from the selector switch on the front panel. The switch selects between common (zero volts), any of three thermocouples, the average of the three, the high of the three, or an external input signal from some other temperature sensing device or simulation.

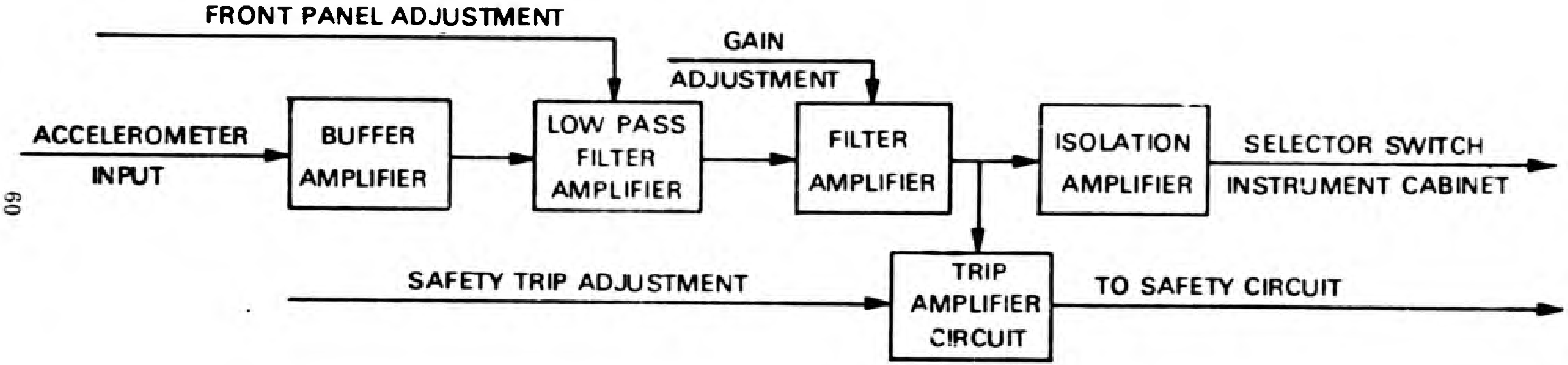

Figure 25 -- Block Diagram of Accelerometer Circuit

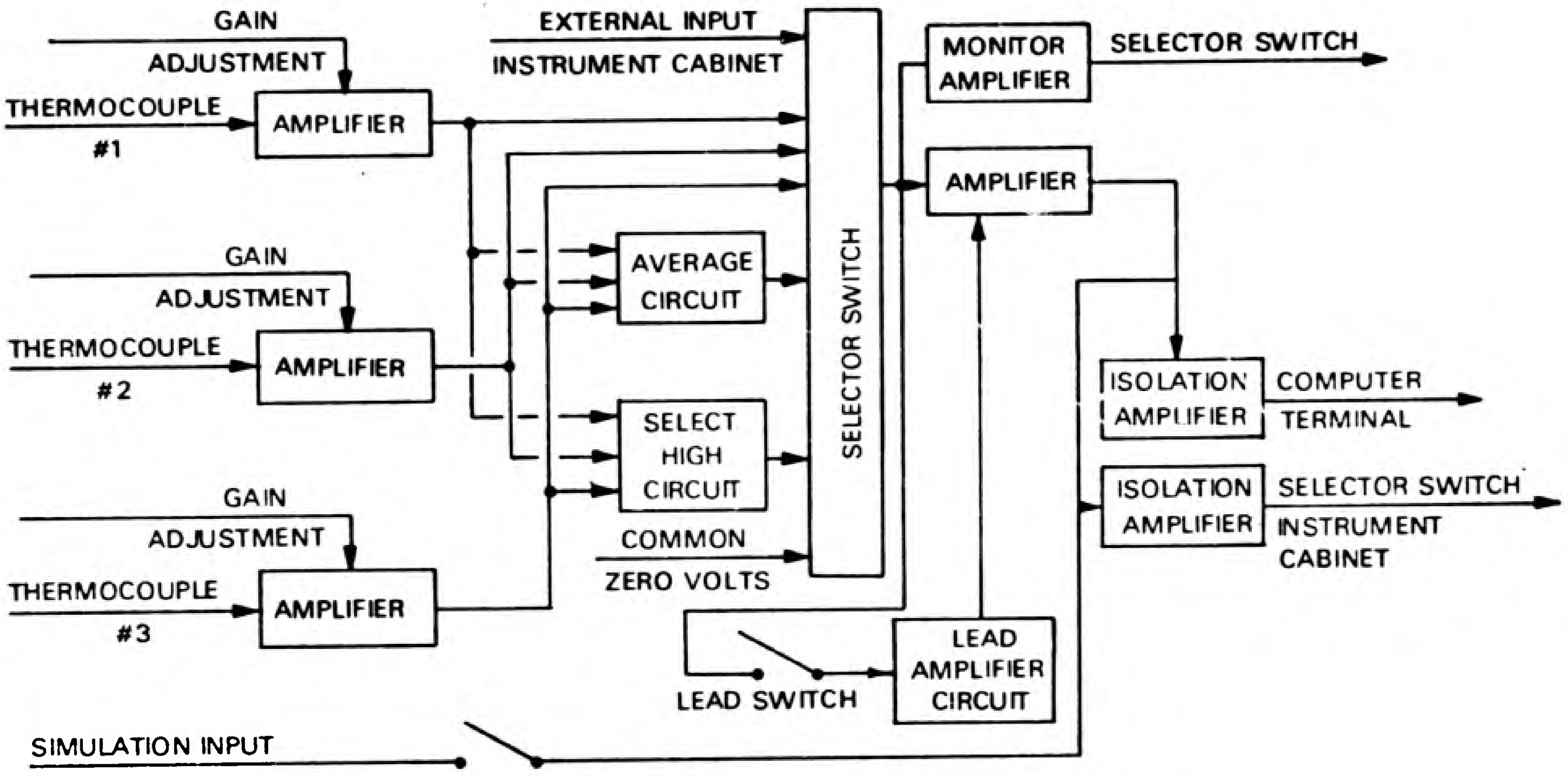

Figure 26 -- Block Diagram Temperature Circuits

This input feeds into a circuit for monitoring the temperatures in degrees Rankine. For circuits "A" and "B" zero input to the monitor is set to yield 6.10 volts, that is, the voltage is equal to the temperature in $^{o}R/100$. For circuits "C" and "D", at zero input the monitor is set to yield .61 volts, that is the voltage is $^{o}R/1000$.

The card input is also fed into the computer and instrumentation circuit. Output of these circuits is limited negatively to prevent computer over load. Also the signals may be input to a lead circuit. This lead circuit may be switched in or out by a switch on the front panel and the lead may be adjusted by a knob on the front panel.

POWER SUPPLY CHASSIS

Figures 27 and 28 are photographs of the power supply chassis. The power supply incorporates seven Power Mate type power supply units. Cable wiring for attaching between the power supply and the three chassis of the system and solenoids in the engine cell is presented in The Manual.

The chassis contains three 115 VAC receptacles for use with checkout equipment. Also the various DC voltages are available at jacks for power supply check and power for auxiliary equipment used during system checkout.

The 0 to 34 VDC power supply has three output circuits controlled by switches for use with solenoid control valves. These circuits are used for airflow switches to the Δ P/P sensor and for a solenoid operated fuel dump valve.

The power supplies were purchased from :

Power/Mate Corporation
514 River Street
Hackensack, New Jersey 07601

Power supply model and use are listed on page 65.

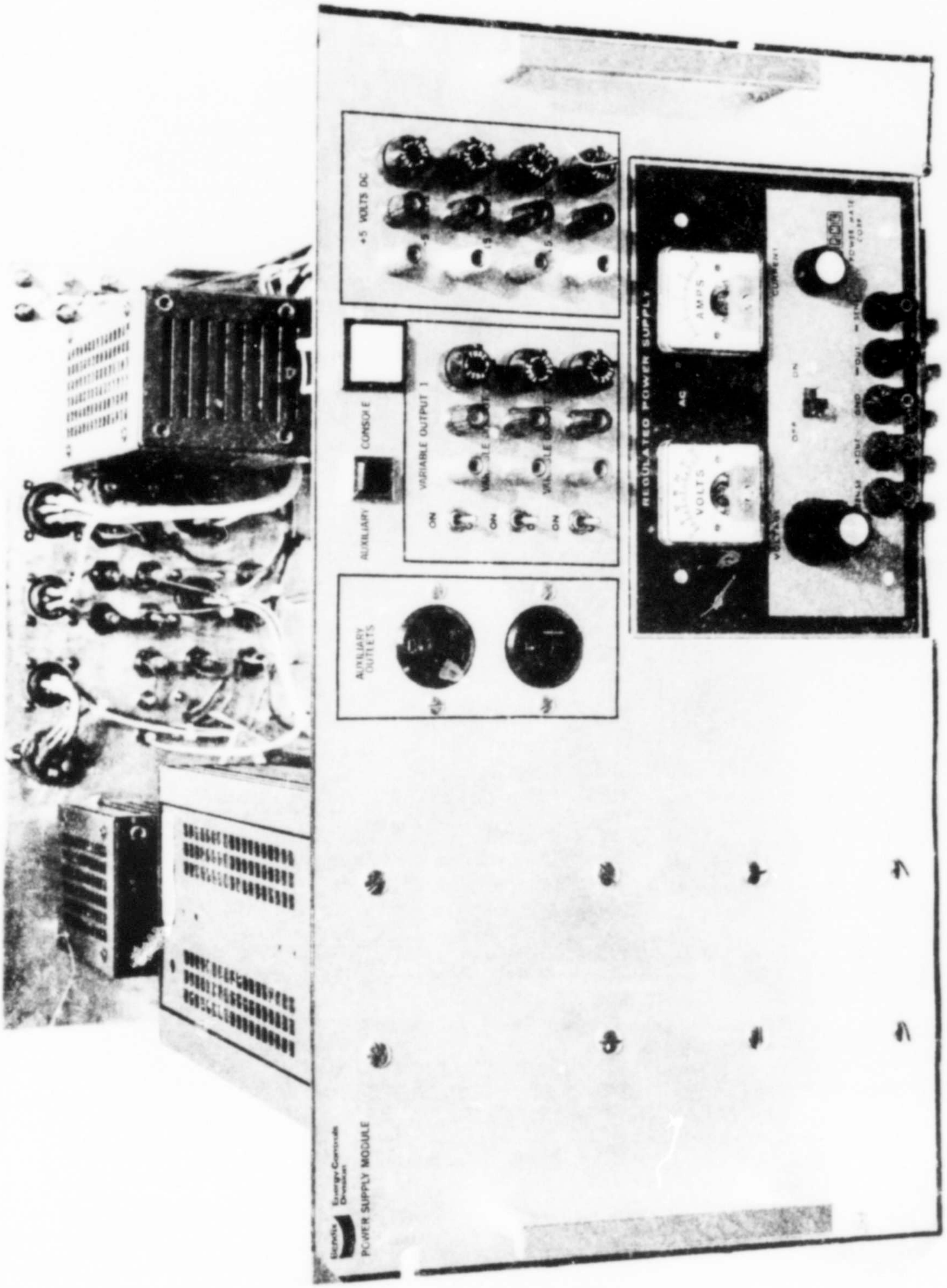

Figure 27 Front View of Power Supply

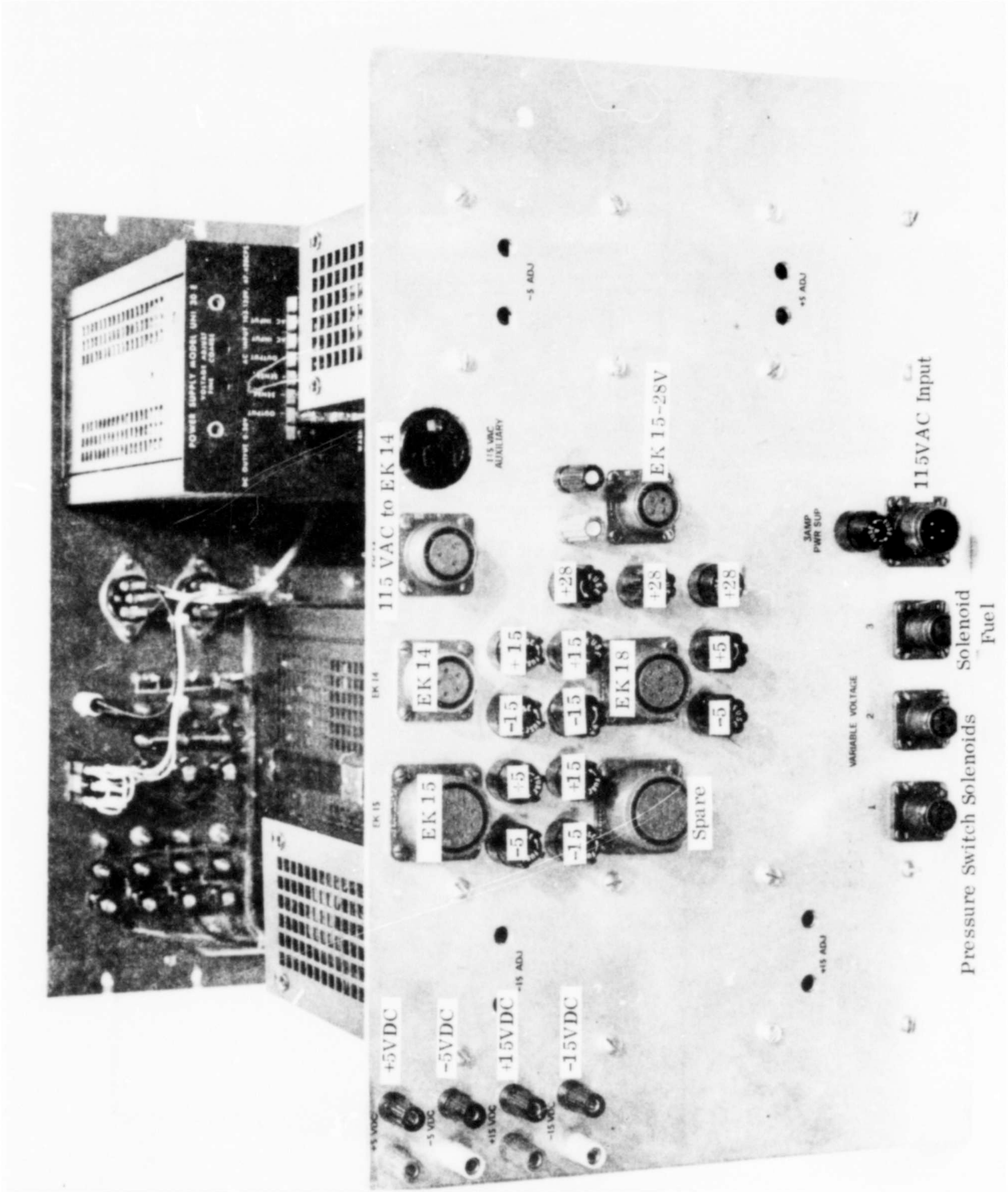

Figure 28 Rear View of Power Supply

Model	Voltage	Chassis
OEM-15-B	+15	EK14, EK15, EK18
OEM-15-B	-15	EK14, EK15, EK18
OEM-5-A	-5	EK15, EK18
OEM-5-C	+5	EK15
OEM-5-D	+5	EK18
BP34F-3.5-A	0 to 34	Solenoids
UN1-30E	+28	EK15, EK18

Instrument Cabinet

The instrumentation cabinet contains access points to signals generated in the system. Figure 29 is a Photograph of the cabinet. Signals available are listed by Figure 30. The points are protected by isolation amplifiers to prevent shorting out a signal to the digital computer.

- The 13 pressure circuit outputs are available.
- Six points for input of signals to the IBM 1800 are available.
- The 12 position circuit outputs are available.
- Other signals available from the EK15 and EK18 are listed by points 65 through 97. A signal not listed but available at the chassis can be obtained through the selector switch points.
- Use of the instrument in and out points is noted in the patch panel discussion.
- Point 108 is used to pickup a nozzle position signal. This signal is through a resistor to instrument in point.
- Point 115 is a signal equal to the called 1800 computer number . (5 volts = 32767 counts).
- Point 117 is a negative 15 volts fed through the simulation - engine switches. For use in the safety warning circuit.
- The four external temperature input points are used with EK18 temperature circuits for input of simulation signals or signals generated by experimental circuits.

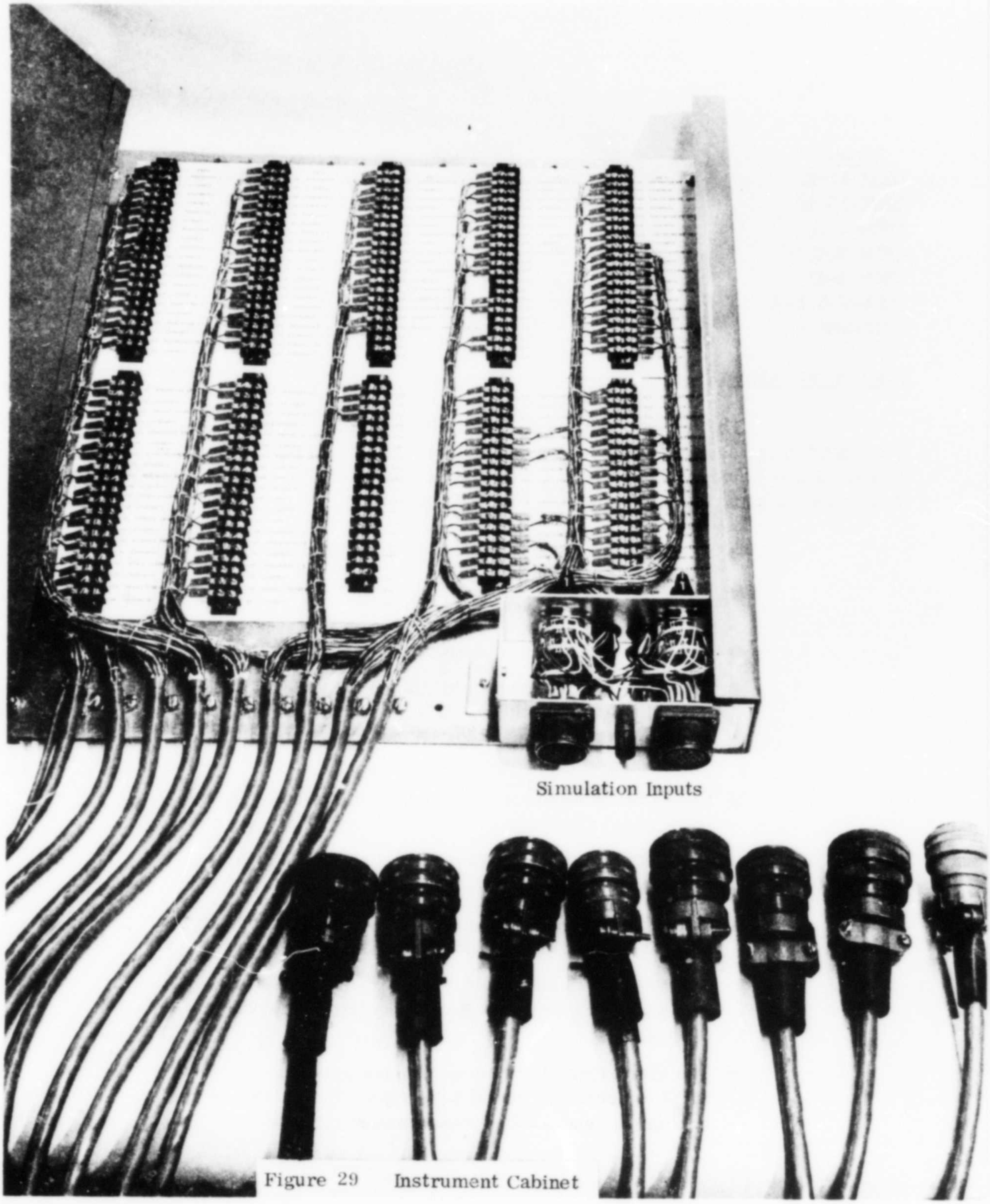

Figure 29 Instrument Cabinet

- Analog computer simulation signals are through the cabinet.

  The following points must be considered in determining simulation line uses:

- Simulation 1 is the Δ P/P signal.
- Simulation 9 is in parallel with patch panel DAC 1.
- Simulation 5 is wired to the pulse inputs of EK 15 for simulation speed input.
- Simulation points 10 through 16 are wired to pressure circuits 1 through 7 for pressure simulation input.
- Simulation 12 is in parallel with 18 and is not connected to the analog computer.
- Simulation 17 is used for fuel request to the analog.
- Simulation 18 is used in the fuel valve check circuit. There is -15 VDC on the point during simulation.
- Simulation 21 is wired through the lead-lag circuit of EK18 which is output to the computer terminal.
- Temperature simulations TC = T4 and TD = T5 are on points 19 and 20 connected directly to the temperature circuits.
- Simulation 22 is equal to the power lever signal to the 1800 computer.

FUEL SYSTEM

The fuel system comprises the main engine fuel control which is made of breadboard components, the geometry effectors, and various items to implement special tests capabilities of the Synthesis Control. The fuel system integrated with the engine test cell equipment is shown in block diagram form by Figure 3. A schematic of the system is shown in Figure 31.

The system can be used with or without the engine operating. The normal condition is considered to be with the engine operating and the selector valves shown in the system schematic (Figure 31) are shown in position for engine operation.

Fuel System Normal Operation (Engine Running)

The normal flow path utilizes the engine pumps, flows through selector valve # 1 to the metering and bypass valves. The discharge from the metering valve flows through the solenoid operated cut-off valve to selector valves # 3 and # 4. With selector valve # 3 open the flow is to the engine nozzles through the engine mounted overspeed governor.

The bypass discharges to the low pressure manifold (P_0) and can be returned to the system inlet or returned to the cell fuel tanks.

The pump discharge pressure after the selector valve # 1 and # 2 is taken through a filter to a high pressure (P_2) manifold which supplies the servo flow for the engine geometry actuators and the metering valve actuator.

The engine pump contains a high pressure relief valve. In addition, a Flexflo pressure regulator is provided to allow setting of the maximum system pressure. The set value of the Flexflo is a manual operation performed by the test stand operator prior to engine start.

Test Operation

To allow testing of the metering valve and actuator, the fuel system can be used in a test configuration. In this configuration selector valves # 2 and # 4 are open while # 1 and # 3 are closed. Fuel is supplied by the motor driven auxiliary pump. The pump pressure is set manually by nitrogen pressure control to the Flexflo pressure regulator in the auxiliary system. The engine pump(s) are bypassed and no fuel flows to the engine nozzles. The metering valve, bypass valve, cut-off valve and all engine actuators can be operated in this configuration.

The flow and pressure are limited by the capability of the auxiliary pump. Within the pump limits any actuator can be frequency responsed by control of the command input to the servo valve.

When running on the auxiliary pump, the valve to allow return flow to the tank should be "cracked". This will allow some return to the tank and allow some make-up flow to enter the system from the tanks through the cell boost pump. This prevents the system from being a closed cycle and prevents fuel temperature rise.

		EK15
EK 15 Cable #2	-1	PRESSURE 1
	-2	COMMON
	-3	PRESSURE 2
	-4	COMMON
	-5	PRESSURE 3
	-6	COMMON
	-7	PRESSURE 4
	-8	COMMON
EK 15 Cable #3	-9	PRESSURE 5
	-10	COMMON
	-11	PRESSURE 6
	-12	COMMON
	-13	PRESSURE 7
	-14	COMMON
	-15	PRESSURE 8
	-16	COMMON
	-17	PRESSURE 9
	-18	COMMON
	-19	PRESSURE 10
	-20	COMMON

		EK 15
EK 15 Cable #1	-41	POSITION 1
	-42	COMMON
	-43	POSITION 2
	-44	COMMON
	-45	POSITION 3
	-46	COMMON
	-47	POSITION 4
	-48	COMMON
EK 15 Cable #4	-49	POSITION 5
	-50	COMMON
	-51	POSITION 6
	-52	COMMON
	-53	POSITION 7
	-54	COMMON
	-55	POSITION 8
	-56	COMMON
	-57	POSITION 9
	-58	COMMON
	-59	POSITION 10
	-60	COMMON

		EK 18	
EK 18 Cable #1	-81	TEMPERATURE A	
	-82	COMMON	
	-83	TEMPERATURE B	
	-84	COMMON	
	-85	TEMPERATURE C	
	-86	COMMON	
	-87	TEMPERATURE D	
	-88	COMMON	
	-89	ACCELEROMETER 1	
	-90	COMMON	
	-91	ACCELEROMETER 2	EK Ca #2 Simulat
	-92	COMMON	
	-93	ACCELEROMETER 3	
	-94	COMMON	
	-95	SELECTOR SWITCH DECK 1	
	-96	COMMON	
	-97	SELECTOR SWITCH DECK 2	
	-98		
	-99		EK Selec Swit
	-100		

	-21	PRESSURE 11
	-22	COMMON
	-23	PRESSURE 12
	-24	COMMON
	-25	PRESSURE 13
	-26	COMMON
		EK 14
	-27	
	-28	COMMON
	-29	Input 1
	-30	COMMON
	-31	Input 2
	-32	COMMON
EK 14	-33	Input 3
	-34	COMMON
	-35	Input 4
	-36	COMMON
	-37	Input 5
	-38	COMMON
	-39	Input 6
	-40	COMMON

	-61	POSITION 11
	-62	COMMON
	-63	POSITION 12
	-64C	COMMON
EK 15 Cable #1	-65	PRESSURE RATIO 1
	-66	COMMON
	-67	PRESSURE RATIO 2
	-68	COMMON
	-69	LVDT 1
	-70	COMMON
	-71	LVDT 2
	-72	COMMON
	-73	LVDT 3
	-74	COMMON
EK 15 Cable #2	-75	FREQUENCY 1
	-76	COMMON
	-77	FREQUENCY 2
	-78	COMMON
	-79	SELECT SWITCH
	-80	COMMON

EK 15 Cable #2	-101	Spare 1	
	-102		
	-103	Spare 2	
	-104		
Cable #5	-105	Spare 3	
	-106		
	-107		
	-108		
	-109		
	-110		
	-111		
	-112		
	-113		
	-114		
	-115	VTxxx	
	-116		
	-117	-15 VDC	IGV
	-118		Req
	-119		
	-120		

EK 18

-81	TEMPERATURE A	
-82	COMMON	
-83	TEMPERATURE B	
-84	COMMON	
-85	TEMPERATURE C	
-86	COMMON	
-87	TEMPERATURE D	
-88	COMMON	
-89	ACCELEROMETER 1	
-90	COMMON	
-91	ACCELEROMETER 2	EK 18 Cable #2 Simulation
-92	COMMON	
-93	ACCELEROMETER 3	
-94	COMMON	
-95	SELECTOR SWITCH DECK 1	
-96	COMMON	
-97	SELECTOR SWITCH DECK 2	
-98		
-99		EK 14 Select Switch
-100		

EK 16

-121	INSTRUMENT IN 1	
-122	COMMON	
-123	INSTRUMENT IN 2	EK 15 Cable #5
-124	COMMON	
-125	INSTRUMENT IN 3	
-126	COMMON	
-127	INSTRUMENT IN 4	
-128	COMMON	EK 18
-129	Temp. A. Ext.	
-130	Common	
-131	Temp. B Ext.	
-132	Common	
-133	Temp. C Ext.	
-134	Common	
-135	Temp. D Ext.	
-136	Common	
-137		
-138		
-139		
-140		

EK 15

-161	INSTRUMENT OUT 1	
-162	COMMON	
-163	INSTRUMENT OUT 2	
-164	COMMON	
-165	INSTRUMENT OUT 3	
-166	COMMON	
-167	INSTRUMENT OUT 4	
-168	COMMON	
-169	SIMULATION 10	P1
-170	COMMON	
-171	SIMULATION 11	P2
-172	COMMON	
-173	SIMULATION 12	P3
-174	COMMON	
-175	SIMULATION 13	P4
-176	COMMON	
-177	SIMULATION 14	P5
-178	COMMON	
-179	SIMULATION 15	P6
-180	COMMON	

EK 15 Simulation Input

-101	Spare 1	
-102		
-103	Spare 2	
-104		
-105	Spare 3	
-106		
-107		
-108		
-109		
-110		
-111		
-112		
-113		
-114		
-115	VTxxx	
-116		
-117	-15 VDC	
-118		
-119		
-120		

-141	SIMULATION 1	ΔP/P
-142	COMMON	
-143	SIMULATION 2	
-144	COMMON	
-145	SIMULATION 3	
-146	COMMON	
-147	SIMULATION 4	
-148	COMMON	
-149	SIMULATION 5	N
-150	COMMON	
-151	SIMULATION 6	
-152	COMMON	
-153	SIMULATION 7	
-154	COMMON	
-155	SIMULATION 8	
-156	COMMON	
-157	SIMULATION 9	IGV Req; EK 15 #4 DAC 1
-158	COMMON	
-159		
-160		

-181	SIMULATION 16	P7
-182	COMMON	
-183	SIMULATION 17	W_f
-184	COMMON	
-185	SIMULATION 18	Analog on-off
-186	COMMON	
-187	SIMULATION 19	
-188	COMMON	
-189	SIMULATION 20	EK 18 #2 Simulation Inputs
-190	COMMON	
-191	SIMULATION 21	Lead-Lag
-192	COMMON	
-193	SIMULATION 22	PLA
-194	COMMON	
-195	SIMULATION 23	
-196	COMMON	
-197	SIMULATION 24	
-198	COMMON	
-199		
-200		

Figure 30 --Instrument Cabinet

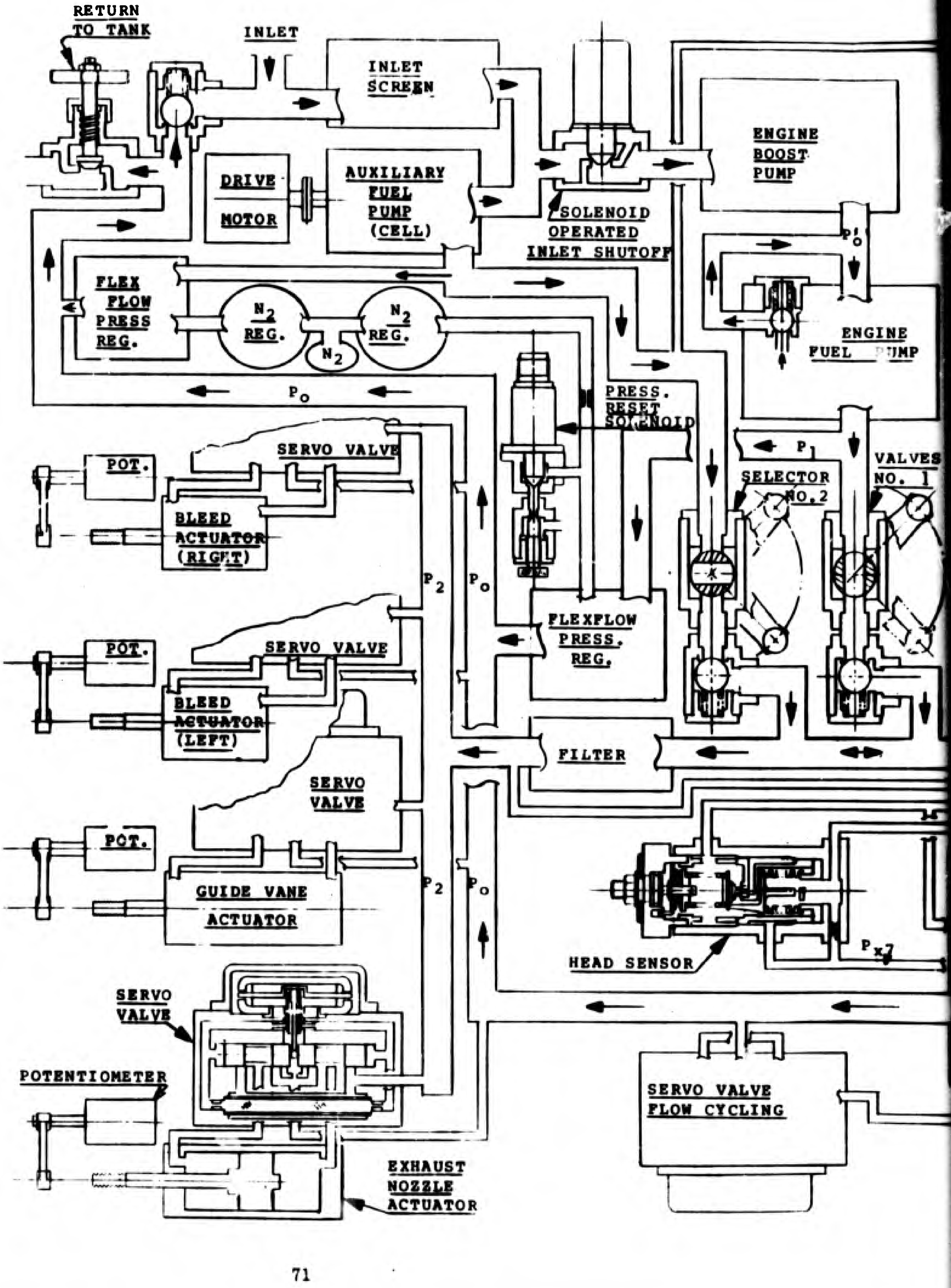
RETURN TO TANK
INLET
INLET SCREEN
DRIVE MOTOR
AUXILIARY FUEL PUMP (CELL)
SOLENOID OPERATED INLET SHUTOFF
ENGINE BOOST PUMP
P_o'
FLEX FLOW PRESS REG.
N_2 REG.
N_2
N_2 REG.
ENGINE FUEL PUMP
P_o
PRESS. RESET SOLENOID
P_1
SERVO VALVE
POT.
BLEED ACTUATOR (RIGHT)
SELECTOR NO.2
VALVES NO. 1
P_2
P_o
FLEXFLOW PRESS. REG.
POT.
SERVO VALVE
BLEED ACTUATOR (LEFT)
FILTER
SERVO VALVE
POT.
GUIDE VANE ACTUATOR
P_2
P_o
HEAD SENSOR
P_{x7}
SERVO VALVE
POTENTIOMETER
EXHAUST NOZZLE ACTUATOR
SERVO VALVE FLOW CYCLING

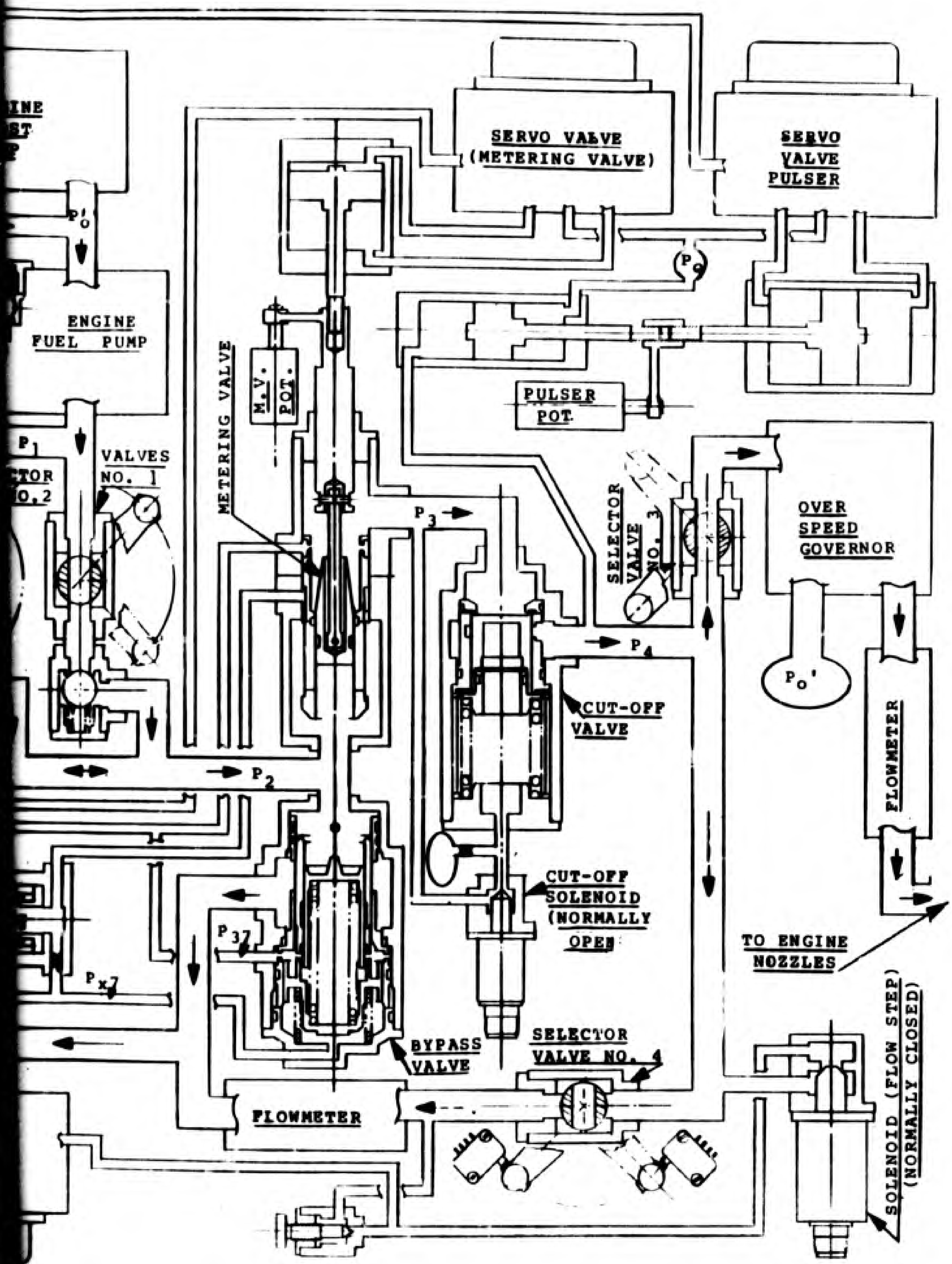

Figure 31 -- Fuel System Schematic

Safety Interlocks

The selector valves # 1, 2, 3, and 4 are all provided with indicating switches as illustrated for valve # 4 on the schematic of Figure 31. The valves are wired in pairs. The pairs have the indicating switches so wired and interlocked with the computer program that no fuel will be provided to the engine unless #1 and #3 are open and #2 and #4 are closed. The program is such that if any valve is only partially closed, the only signal to the components is to close the main metering valve.

NOTE : This program feature must be provided in the computer program. The fuel system can only supply the necessary signals. If the selector valves are reversed (in the test operation positions) the computer program will also be in control. Position indicator lights are mounted on the back of the rack in which electronic interface chassis EK 18 is mounted.

A second safety interlock is associated with a solenoid in the nitrogen (N_2) line to the flex-flo controlling engine pump discnarge maximum pressure. The reset solenoid opens when and if the signal from the engine mounted accelerometers exceeds a predefined set value. The reset pressure depends on the size of the line bleed and the micro valve setting. This circuit is independent of the computer program.

This feature is adjusted and used when test conditions are into stall. Normal nitrogen pressure (solenoid energized) is set near 700 psig and the bleed down pressure (solenoid de-energized) is set by the micro valve near 125 psig. If high engine vibration occurs, the solenoid is de-energized which reduces fuel flow allowing the engine to recover. The engine operator will have time to correct the requested condition before the engine and pressure recovers.

Special Features

The system has the capability of providing pulses, stepped, or cyclic fuel flow changes.

- Fuel Flow Step-- With the engine running, the engine flow can be given a "step" change. The solenoid (Flow Step) is energized and a fraction of metered flow is bled back to the system inlet. The magnitude of the step is controlled by the setting of the micro-valve.

  NOTE : The servo valve (Servo Valve Flow Cycling) must be in null position or it will also contribute to the magnitude of the flow step change.

- Fuel Flow Cycling --A servo valve (Flow Cycling) is provided down stream of the solenoid (Flow Step) to allow the engine flow to be cycled while the computer is in control of the metering valve. By closing the micro valve and opening the solenoid (Flow Step), the nozzle flow can be bled to inlet by cycling the servo valve. It should be noted that a reduced flow will occur for each half of the servo valve stroke and the nozzle flow will be equal to or less than the value set by the metering valve position. (Never greater than demand flow from the computer program).

- Fuel Flow Pulser Operation --This can be tested for performance in the test configuration with the selector valves # 2 and # 4 open and # 1 and # 3 closed. It should be noted that the supply to drive the pulser cylinder is provided by, and only by, the auxiliary pump.

  To operate the fuel pulser with the engine running, it is necessary to have the auxiliary pump running. In engine running operation the selector values are in the normal position. That is # 1 and # 3 open with # 2 and # 4 closed. The auxiliary pump can be turned on and the discharge pressure set with the Flexflo regulator in the auxiliary circuit. The fuel pulser will then effect metered flow by sensing the required signal to the Pulser Servo Valve.

System Pressures

The system pressures are determined by the nozzle flow pressure curve, compressor discharge pressure, and the various control valve and line losses. The following listing define pressures with the subscripts as shown on the schematic of Figure 31.

P_4 -- Nominal nozzle discharge pressure. In engine running, compressor discharge must be added and some line losses will occur between the discharge from the cut-off and pressurizing valve and the nozzles.

P_3 -- Exceeds P_4 by the drop across the cut-off and pressurizing valve. Nominal setting of the pressurizing valve is 60 ± 5 psi. When P_4 exceeds the set value, the cut-off valve drop is negligible.

P_2-- Greater than P_3 by the drop across the metering valve. P_2-P_3 is set by the head sensor and has a nominal value of 60 psig.

P_1-- High pressure in the system equal to pump discharge pressure. Greater than P_2 by line losses and check valve drop.

P_o-- Low pressure in system on pressure sink. Generally set by cell boost pump discharge pressure.

FUEL SYSTEM COMPONENTS

The major components supplied as part of the Synthesis System are listed in Table 2. The following items included on the schematic of Figure 31 were either in the test cell or added to the cell by AFAPL personnel.

Tank Return Shut-Off Valve
Inlet Screen
Auxiliary Pump and Drive Motor
Inlet Servo Operated Shut-Off Valve
Flowmeters
Check Valves

Other components shown in the schematic of Figure 31 are bill of material to the engine (in this case the J85-13).

Engine boost pump and high pressure pump assembly
Hydromechanical overspeed governor
IGV actuators

PART NAME	SUPPLIER	MODEL OR PART NUMBER
Metering Valve Assembly	Bendix	FXD-162944
Head Sensor Assembly	Bendix	FXC-162943
Bypass Valve Assembly	Bendix	FXD-162942
Cutt-off Valve Assembly	Bendix	FXD-162945
Solenoid-Step Function	Bendix	190585
Fuel Pulser		
Pulser Cylinder	Hydro-Line	R2F 1 x 6
Drive Cylinder	Hydro-Line	R2F 2x6
Potentiometer	Bourns	2001081615
Servo Valve	Moog	72-102
Bleed Actuators		
Drive Cylinder	Tom-Thumb	HVP 1 x 1
Potentiometer	Bourns	
Servo Valve	Moog	031 A 02705A-050H4
IGV Actuator		
Drive Cylinder	GE	Engine Part
Potentiometer	Bourns	2001782009
Moog Valve	Moog	73-101
Nozzle Position Request Actuator		
Request Cylinder	Hydro-Line	R2F 1 x 1
Request Potentiometer	Bourns	2001781010
Servo Valve	Moog	031A11005A-050H4
Metering Valve Actuator		
Drive Cylinder	Hydro-Line	R2F 1x1
Potentiometer	Bourns	2001781010
Servo Valve	Moog	031A11005A-050H4
Flow Cycling Servo Valve	Moog	031A02705A-050H4
Cut-off Solenoid	Skinner	V116 DA1 1001
Pressure Reset Solenoid	Skinner	V51 DB 2200
Flexflo Auxiliary System	Grove	880 NH 275 psi
Flexflo Main System	Grove	10679 WK 1500 psi

Table 2 -- Fuel System Assemblies

The following comments amplify Table 2 where additional information is applicable.

Fuel Metering Valve

The two valves supplied have linear contour with a gain of 23.5#/ hr. and 7.9 #/hr. per .001 inch travel. Maximum capacities of 17,600 #/hour and 6500 #/hour are obtained.

Head Regulator and Bypass Valve

Figure 32 shows exploded views and assembly drawings of the head regulator and bypass valve. The head regulator controls the integral part of the proportional plus integral bypass valve. An adjustment on the regulator is used to set a head of 57 psi across the metering valve. This setting will yield the metering valve flow calibration currently being used in the installation. The proportional part of the bypass valve was preset to yield proper operation with the J85-13 pump.

Cut-Off and Pressurizing Valve

Cut-off is provided by de-energizing the normally open solenoid which vents high pressure to the back side of the value and allows the spring to close the value. In event of a system electrical power failure, the valve will go to the cut-off position and shut down the engine.

With the cut-off solenoid valve closed (solenoid energized) the back side of the valve is vented to P_O and the cut-off valve acts as a fuel system pressurizing valve.

Actuators

The two types supplied were procured from Hydro-Line and Tom Thumb.

- <u>Hydro-Line</u> -- The Hydro-Line cylinders used are the R2 series with the "F" (in R2F) designating end mounting flange. The numbers following the model type are bore diameter and stroke. That is an R2F 1 x 2 has a one inch bore and two inch stroke. One inch diameter bores for R2 series are rated at 3000 psig and for 2 inch bores are rated at 1500 psi. For detailed information

Bypass Valve

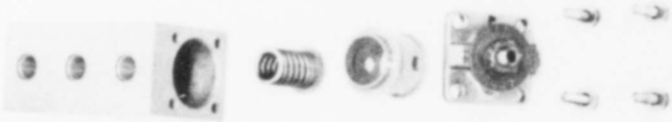

Head Regulator

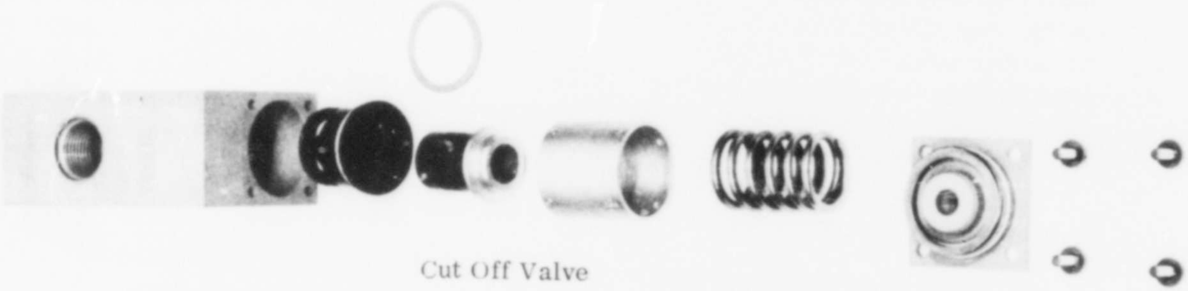

Cut Off Valve

Servo Valve

Metering Valve Actuator

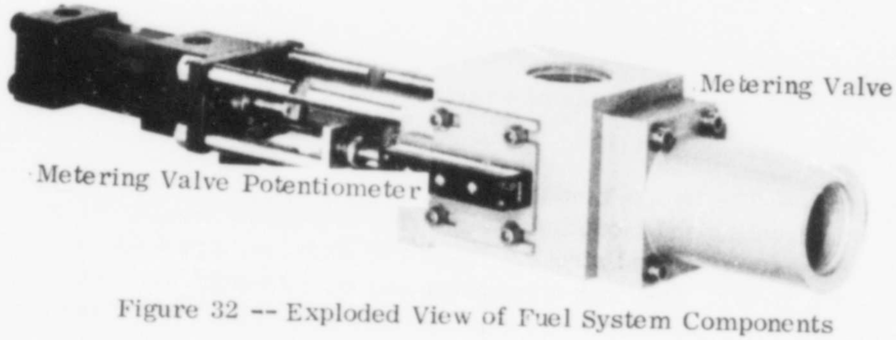

Figure 32 -- Exploded View of Fuel System Components

manufacturer's catalogs should be consulted.

- Tom Thumb -- These are supplied in HV series rated at 2000 psi hydraulic pressure with the P (in HVP) being the mounting flange definition. The bore and stroke designation are the numbers following the letters.

Servo Valves

Moog Industrial Series 72 and stock Type 30 servo valves have been procured for the Synthesis System components.

- Moog Series 72 and 73 Servo Valves -- For detailed information the manufacturer's catalog should be consulted. For the Model 72-102 used with the fuel pulser the following is obtained.

Rated Flow at 1000 psi drop	= 40 gpm (72-102)
Rated input signal	= 15 ma
Coil resistance	= 200 ohms

The frequency response can be approximated by a second-order transfer function with a natural frequency of 60 cps and a damping ratio of 0.9. Frequency response is somewhat dependent on signal amplitude, temperature, and supply pressure.

- Moog Type 30 Servo Valves -- The type 30 Servo Valves carry a part number which fully defines their physical characteristics. The following example is from Catalog 315.

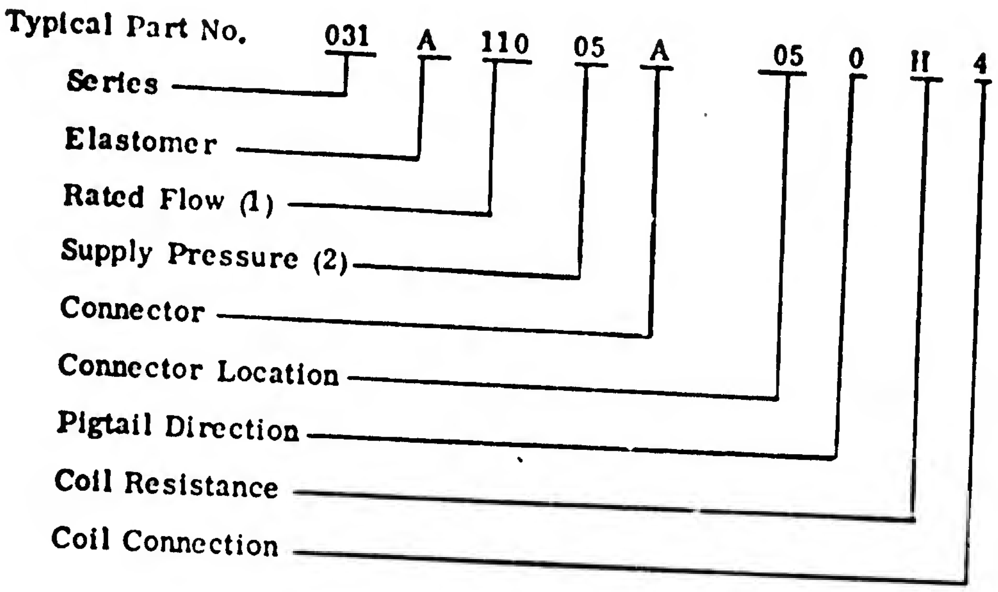

(1) Rated flow is in cubic inches per second (CIS) x 10
(2) Supply Pressure = psi/100

For the example shown which is the valve designated for use with the metering valve and nozzle actuators, the rated flow is 11 CIS at 500 psi. Natural frequency for this series is 80 cps or greater. Rated current is 10 ma.

Solenoid (Flow Step)

This is a Bendix part. Flow capability specification is 5 gpm (1940 PPH) with less than 20 psi drop across the valve. The unit delivered (Serial No. 31675A) as shipped had 9 psi pressure drop across the valve.

Special Mountings

The bleed valve actuator and the nozzle actuator have special mountings provided. These are shown on Figures 33 and 34.

The nitrogen pressure regulators for the Flexflo control pressure and gages are mounted on the operators panel in the control room. These are shown in Figure 2.

PRA-A2 PRESSURE RATIO SENSOR

The Bendix PRA-A2 pressure ratio sensor was developed during the course of the contract. Figure 35 is a schematic showing operational details of the mechanism. Figure 36 is a photograph of the sensor.

Pressure Ratio Sensor Operation

The PRA-A2 Pressure Ratio Sensor senses the ratio between a total pressure P_t and a static pressure P_s by flowing air from P_t through a circuit consisting of a manually adjustable upstream restriction A_1 and a choked downstream movable valve A_2. The latter is automatically positioned to make the intermediate pressure P_{C1} equal to P_s . The valve position required to make P_{C1} equal P_s is a measure of the ratio $(P_t - P_s)/P_t$ or $\Delta P/P_t$. The value of $\Delta P/P_t$ is indicated by the output signal from a linear differential transformer having a sensor core fastened to the piston on which conical valve A_2 is formed. A fluid amplifier amplifies the pressure difference $P_{C1}-P_s$ to produce the output pressure difference $P_{01}-P_{02}$ which positions the piston. Piston movement is snubbed by the viscous impedance to air flowing from the P_{01}- and P_{02} annuli through the .001 piston radial clearance to the piston ends. The amplifier is with air from burner pressure P_b . This air is processed through a coarse wash filter, a cyclone separator and two fine filter screens. The cleaned air is also used to supply air bearings which float the piston and a small bleed flow into the P_{C1} and P_s lines (via restrictors R8 and R3) to insure that only clean air reaches the amplifier output.

The coarse filter is washed by the air used for an ejector which aspirates the discharge of valve A_2 so that it will be choked at all operating conditions. A separate filter screen is provided for P_t since for compressor discharge mach number sensing P_b is too low to permit bleeding it into the P_t

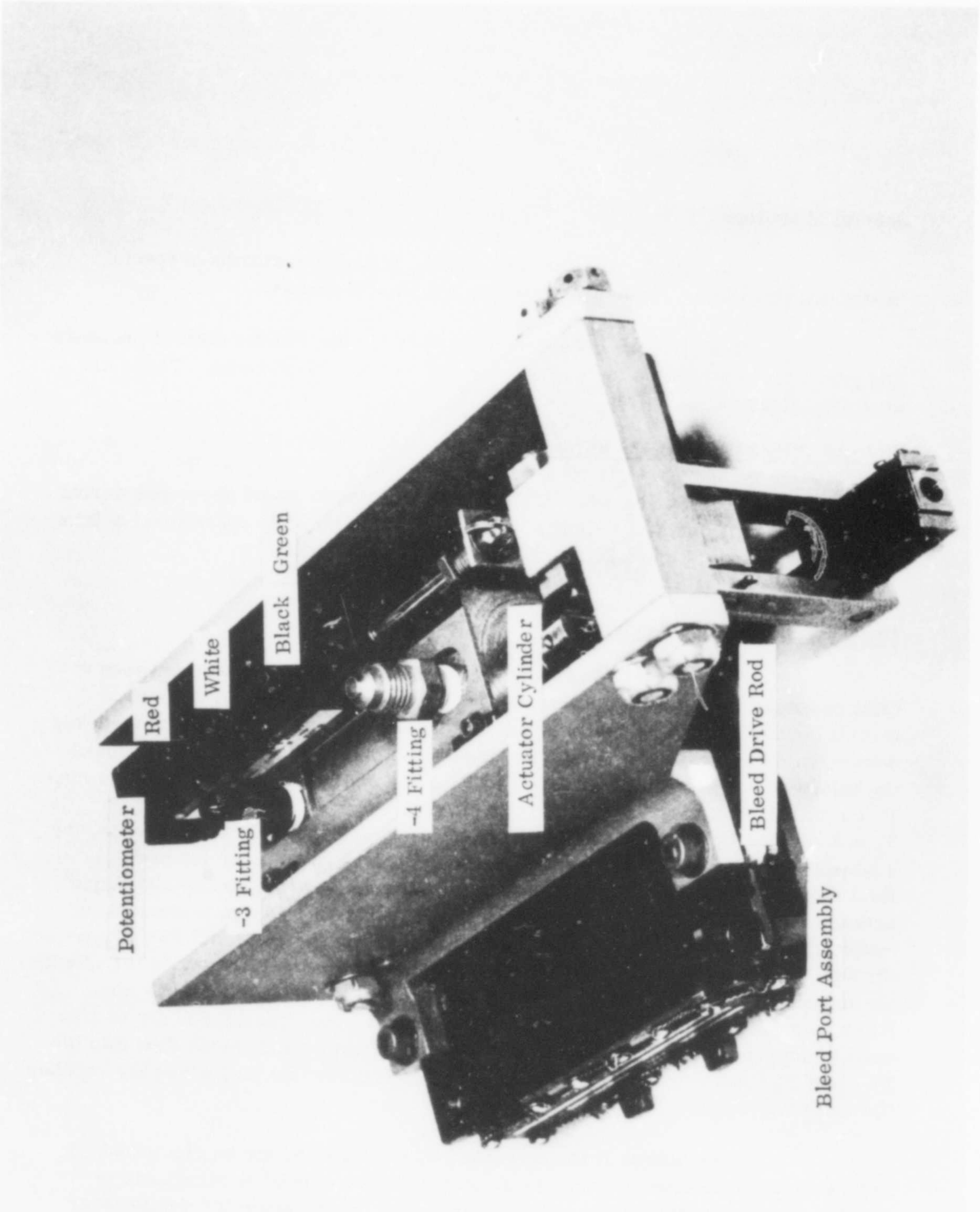

Figure 33 Bleed Door Actuating Mechanism

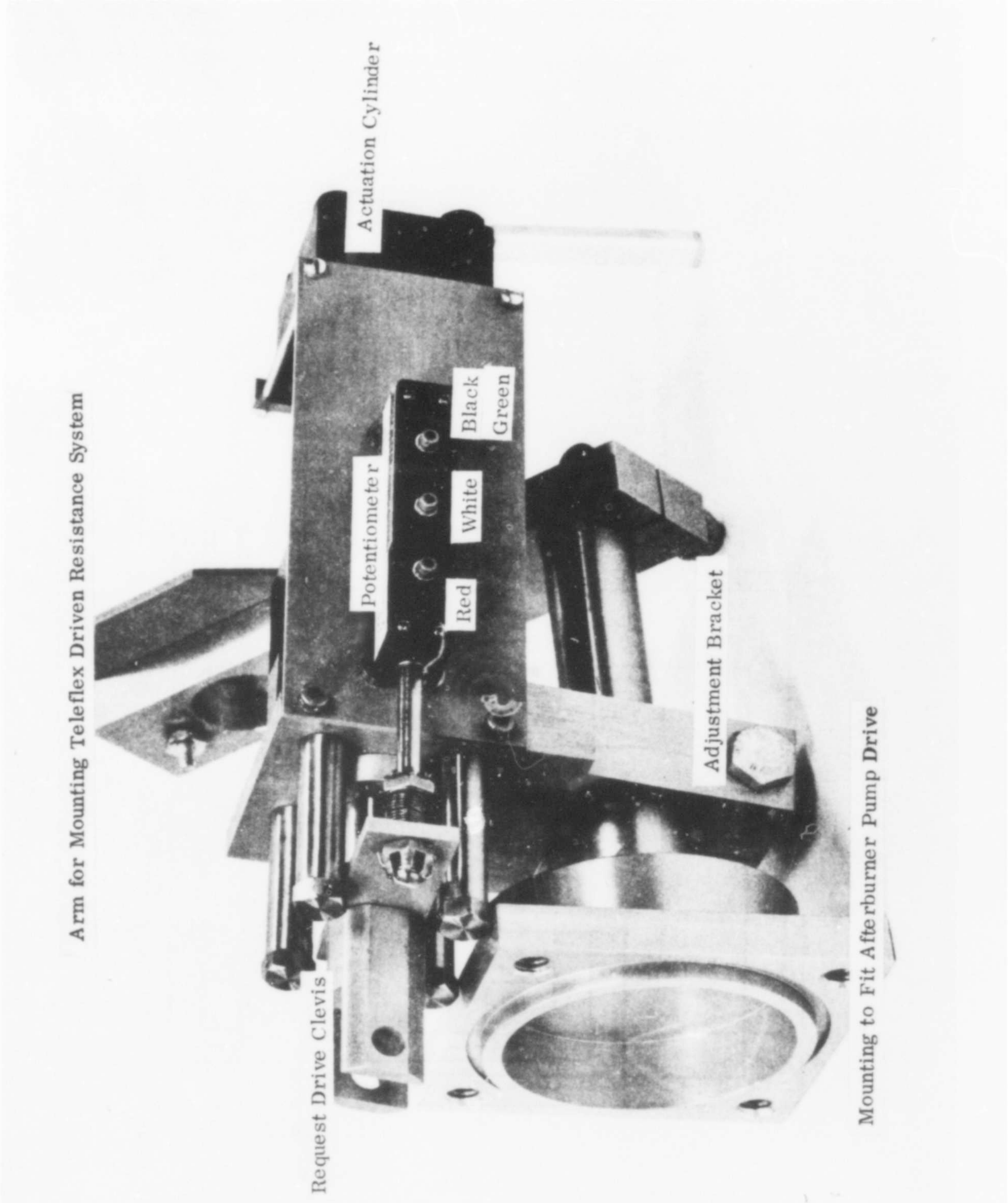

Figure 34 Nozzle Position Request Mechanism

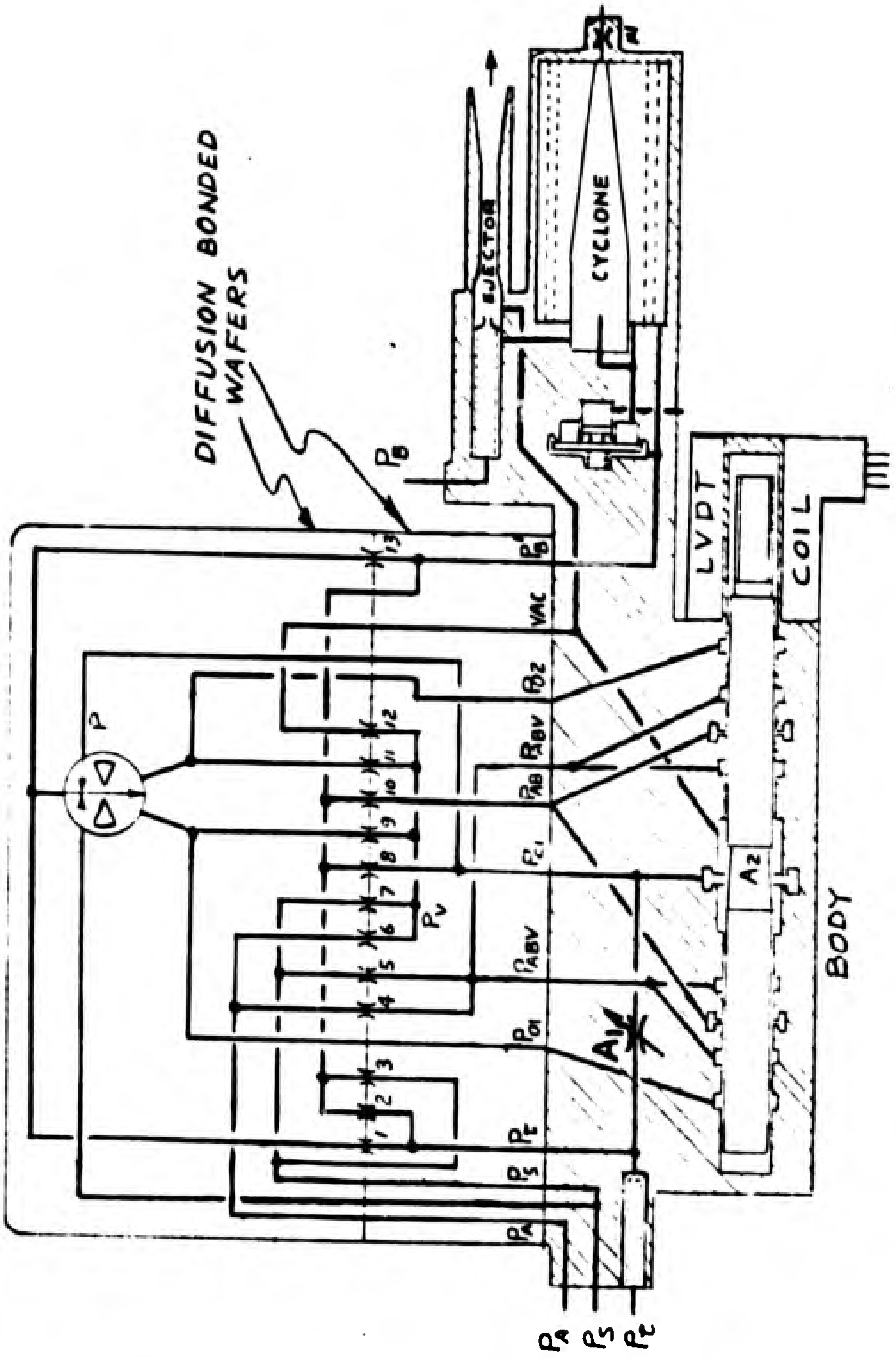

Figure 35 -- Schematic of PRA-A2 Pressure Ratio Sensor

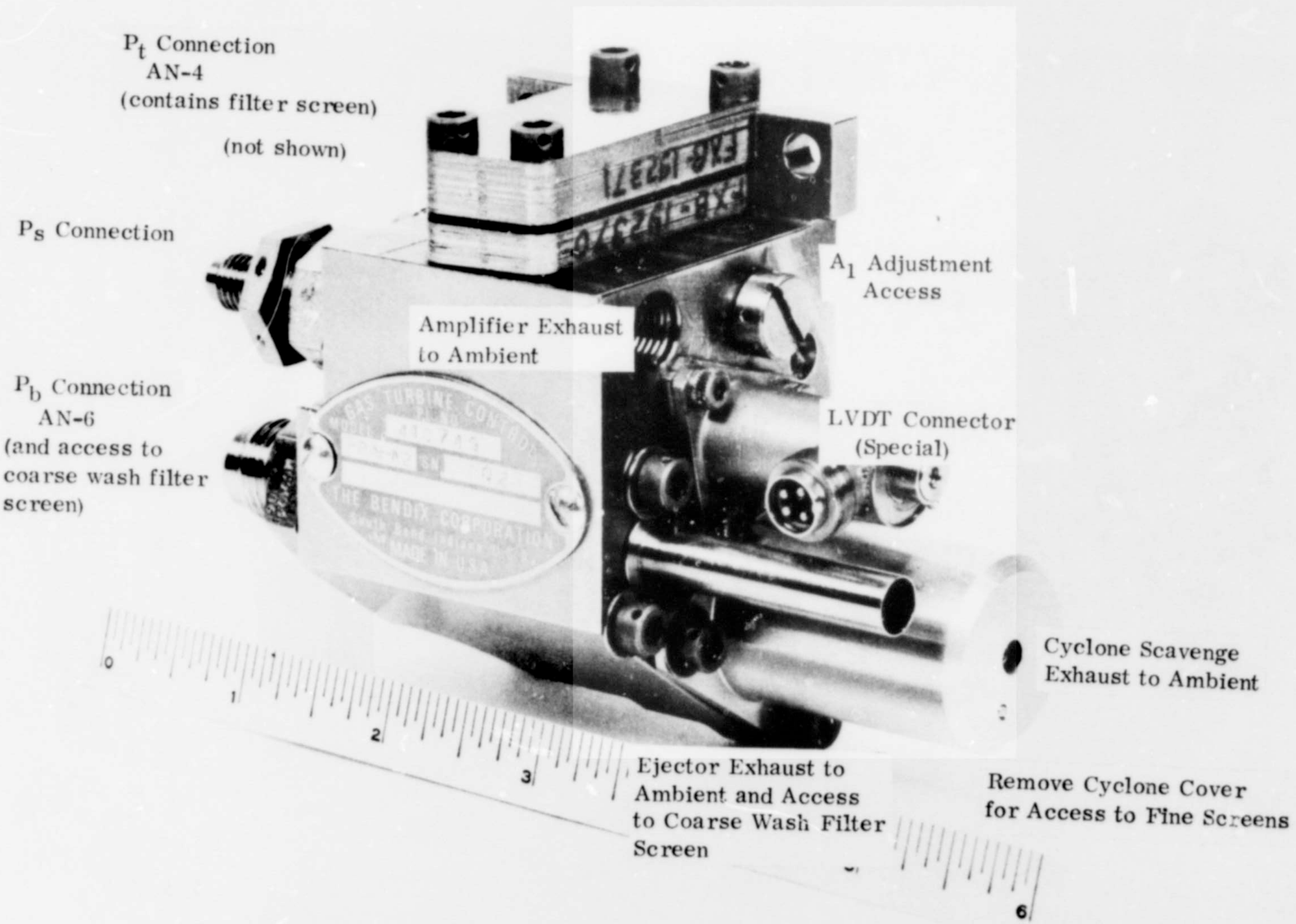

Figure 36 -- PRA-A2 Pressure Ratio Sensor

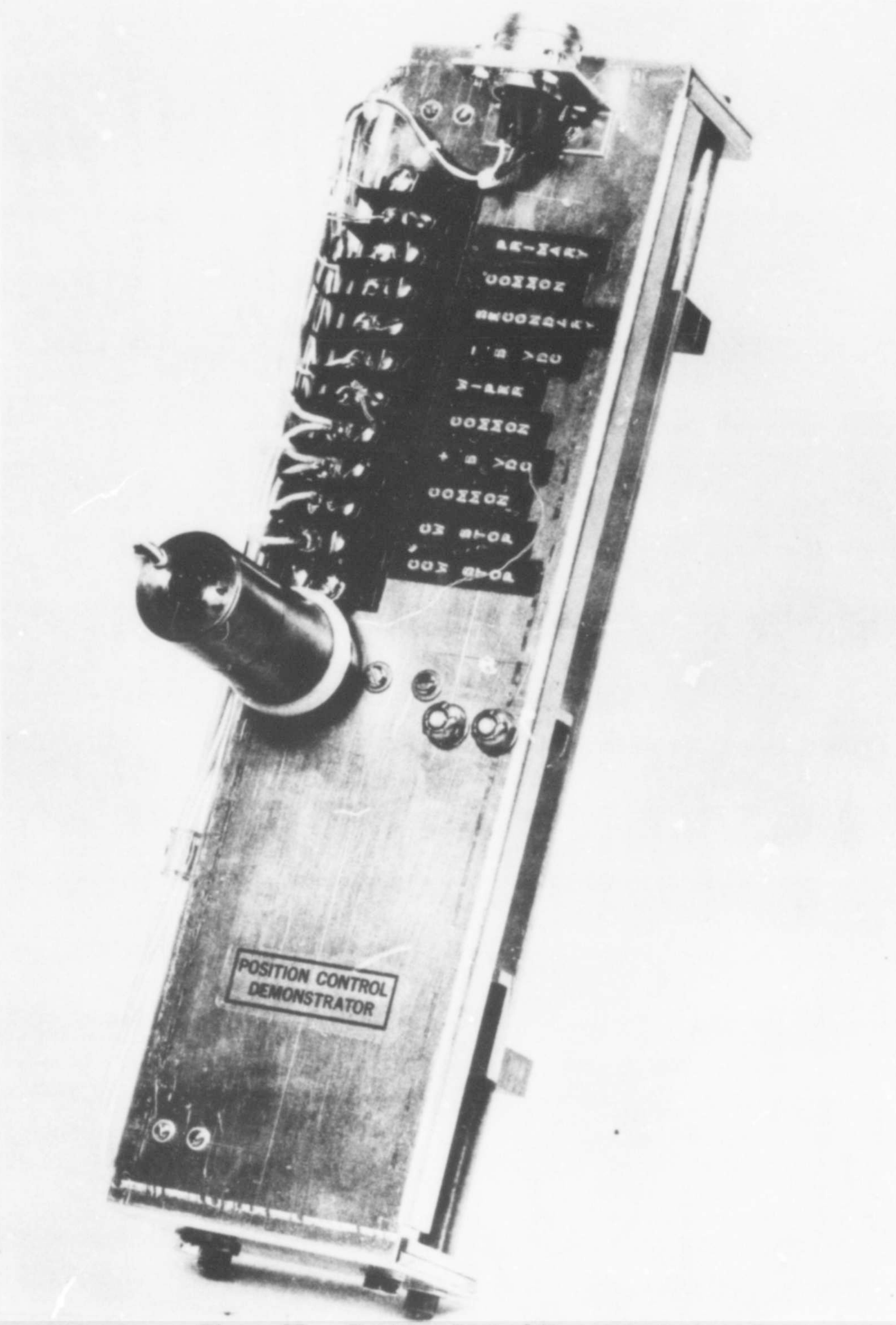

Figure 37 -- Position Control Demonstrator

line. Amplifiers vent pressure P_v is controlled by restrictors R6, R7 and/or R12, and air bearing vent pressure P_{abv} is controlled by restrictors R4 and/or R5. For this application, P_v and P_{abv} are made the same and controlled by a vent restrictor R4 placed in the P_a vent port - by opening R4 and R6 and closing R5, and R12. Amplifier output load is established by restrictors R9 and R-11 in parallel with leakage paths along the piston. The A_2 valve cone angle and minimum A_2 opening determine the ratio of maximum to minimum sensed $\Delta P/P_t$.

POSITION CONTROL DEMONSTRATOR

A device "Position Control Demonstrator" is shown by the Photograph of Figure 37. The device contains an LVDT and Potentiometer for position indication and a stepper motor driving the mechanism through a pinion and rack.

The contract requires provisions for control of compressor stator vanes and turbine nozzles. These items are not included on the engine. Since requirements of these actuators are unknown, the techniques of stepper motor drives and the use of LVDT feedback are demonstrated by the mechanism.

To demonstrate control with this mechanism three cables are connected to the device and three lines are patched in the EK15 patch panel. The mechanism is used to checkout the position control circuits with use of fuel flow.

SECTION III

IBM 1800 COMPUTER PROGRAMS

The computer program provides computations with the results of the computations output to the electronic interface package. Engine geometry positions and fuel flow are then controlled to the computed values by circuits of the interface. Computer computations are based on engine variables sensed by transducers and converted to voltages or digital words by the interface circuits. The effects of the variables in the computations are changed by program adjustments. Block diagrams illustrating the digital program are presented. Examples of computer print-out lists of variables, adjustments, and computations are also presented. The computer program print-out obtained by printing the card deck at the time of use is the only valid control program.

Figure 38 illustrates the program input-output features. Nominal program constants are loaded into the standard trim register. These constants are transferred to the variable trim register by a reset signal. In this register the numbers can be changed by adjustment logic circuits and program. Engine variables such as pressures, temperatures, pressure ratios, positions, rotor speed and accelerations are sensed by transducers and converted by interface circuits to signals compatible with the computer inputs. Power lever position is also input through the interface to the computer.

The computer program utilizing the constants and variable inputs computes positions of the fuel valve, inlet guide vanes, compressor bleeds, and exhaust nozzle. These signals are output to the interface. The computer outputs are compared with feedback signals by circuits of the interface and control signals are generated. Control signals are output to engine mounted control devices.

Safety circuits incorporated in the interface reset the program to standard trims. When the program is being varied to examine effects of trim values and problems occur, the program is reset to the safe standard values by the operator reset switches. Signals may be conditioned or simulated by an analog computer and input to the program through the interface. Use of the analog computer is discussed in Section IV.

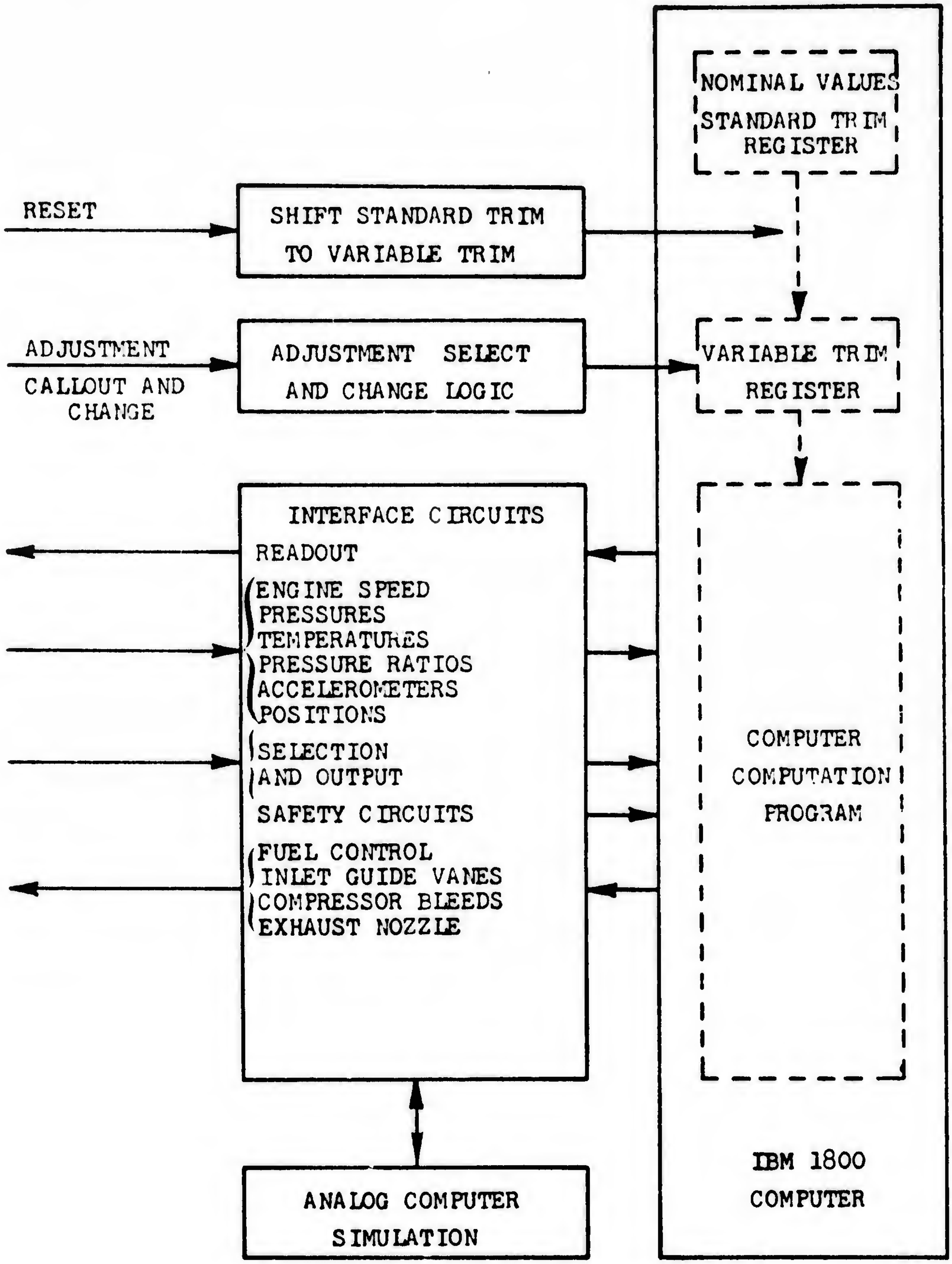

Figure 38 -- Program Input-Output Features

PROGRAM ADJUSTMENTS AND SAFETY LOGIC

The IBM 1800 computer program computation values are changed by digital word input. Value of the selected adjustment, or a computed number, is read out by digital word and displayed in counts and a voltage equivalent to 5 volts equal 32767 counts.

Nominal program values are included in the program deck. These values are transferred to the computation routine when the power lever is in cutoff or by reset switches. In the routine register the values are called by positioning a thumb wheel switch to the adjustment number desired. The selected number is changed by moving a change switch up for an increase in number and down for a decrease in number while simultaneously operating an interrupt switch down for a single change and up for multiple changes at a set rate.

The value of the computer number selected is read out on a five digit decimal display. In addition to the adjustment values, computation and input variable values can be called out by positioning the thumb wheel switch. In the initial program, 254 numbers are available. Zero is not used. Some numbers are used for program adjustment. The other numbers are used to call up computation points for check of program operation. Numbers used for adjustment are the only ones programmed for change.

Figure 39 illustrates the adjustment circuit features. The adjustment number and the magnitude of the change is input through one digital word. Lower order bits are used for change and higher order bits are used for number call out. Value of the selected adjustment is readout by digital word. Any change to this called up adjustment is accomplished by moving the appropriate change switch up for increase in number or down for decrease in number. While holding the change switch, the interrupt switch is moved to activate the change.

Bits of a second digital word are used for program logic. The highest bit 2^{14} is used for resetting all the adjustments simultaneously. When the bit becomes positive, the nominal adjustment numbers are transferred to the program register. This bit becomes positive when the throttle is in cutoff or due to a reset switch.

The next bit is used to reset the called adjustment. This bit is made positive by action of a switch. After examination of a control loop by changing a particular adjustment, the adjustment is reset by the switch. Also if a control problem develops, the adjustment can be reset quickly.

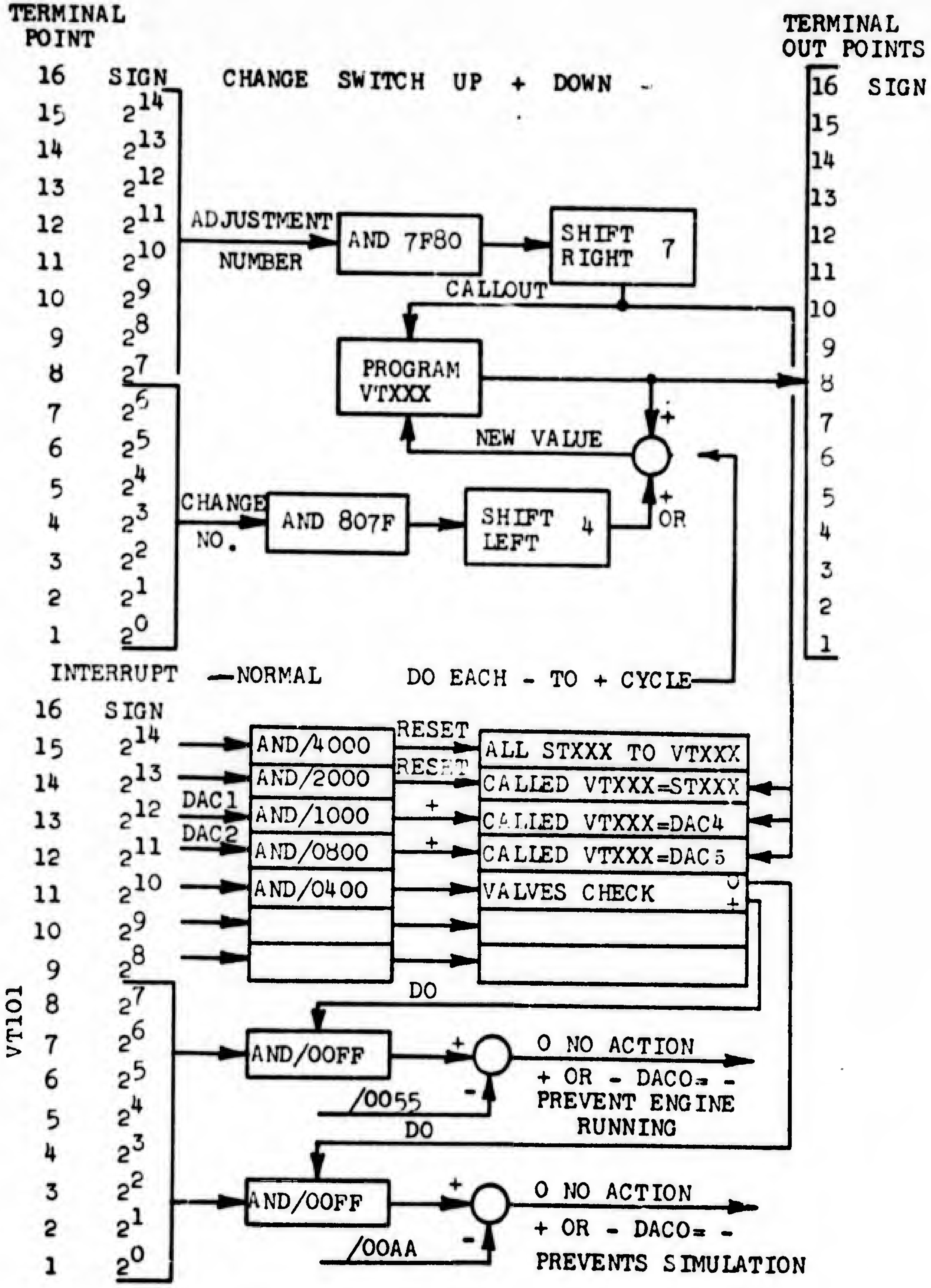

Figure 39 -- Adjustment and Logic Features

Bit 2^{12} is used to equate DAC 4 output to the called computational value. This DAC can then be used for recording the variable during an engine test cycle. Bit 2^{11} is used in a similar manner when a second computer value is desired for recording through a DAC. These variables will hold until another variable is selected by the thumb wheel switch and the command to equate is given by the DAC1-DAC2 switch.

Bit 2^{10} is an analog computer input through simulation point 18 and output through DAC 11 (cable 11 and 12). When the analog computer switch in the instrument cabinet is on simulation, a programmed negative signal yields a logic zero in the computer and the engine valving is checked for check-out configuration. If not, a red light comes on the panel and a negative fuel is requested. This prevents the simulation program from running. If the simulation switch is open to engine running a logic one exists in the computer and engine configuration valving is checked. If not, a negative fuel request is output and the red warning light comes on.

Valve indication is shown by the following table:

			Volts	Logic	Volts	Logic
Test	2^7	Open	0	1	-24	0
Flow	2^6	Closed	-24	0	0	1
Engine	2^5	Closed	0	1	-24	0
Flow	2^4	Open	-24	0	0	1
Test	2^3	Open	0	1	-24	0
Pump	2^2	Closed	-24	0	0	1
Engine	2^1	Closed	0	1	-24	0
Pump	2^0	Open	-24	0	0	1
			TEST		ENGINE RUNNING.	

The engine running number in hexidecimal form is 0055 and for checkout the number is 00AA.

Figure 40 is a partial print out of the trims program. The program standard trim values are listed as STXXX. When the reset switch is pressed or the throttle is in cutoff, the routine of storing the STXXX's to the VTXXX's is run through. VTXXX is called in the computer computation.

```
 13    RSTAL EQU      *         RESET ALL DIGITAL ADJUST   GTE00190
 14          LD       ST001                                GTE00200
 15          STO    2 VT001                                GTE00210
 16          LD       ST002                                GTE00220
 17          STO    2 VT002                                GTE00230
 18          LD       ST003                                GTE00240
 19          STO    2 VT003                                GTE00250


 72          LD       ST030
 73          STO    2 VT030                                GTE00780
 74          B        STTVT                                GTE00790
 75          LORG                                          GTE00800
 76    +     DC       0                                    GTE00810
 77    *
 78    ST000 DC       0         SPEED CONTROL FIG10-3&4    GTE00820
 79    ST001 DC       0                                    GTE00830
 80    ST002 DC       0         IDLE SPEED TRIM            GTE00840
 81    ST003 DC       20000     MAX  SPEED TRIM            GTE00850
 82    ST004 DC       0                                    CLA00850
                                      BRANCH COMMAND  64+  GTE00870


150    ST056 DC       16600     T5 REQUEST                 GTE015.
151    ST057 DC       16384     T5 CONTROL GAIN            GTE01560
152    ST058 DC       0                                    GTE01570
153    ST059 DC       0                                    GTE01580
154    ST060 DC       0                                    GTE01590
155    STTVT EQU      *                                    GTE01600
156          LD       ST031                                GTE01610
157          STO    2 VT031                                GTE01620
158          LD       ST032                                GTE01630
159          STO    2 VT032                                GTE01640


210          LD       ST058                                GTE02150
211          STO    2 VT058                                GTE02160
212          LD       ST059                                GTE02170
213          STO    2 VT059                                GTE02180
214          LD       ST060                                GTE02190
215          STO    2 VT060                                GTE02200
216          B        DAC4L     BRANCH TO DAC4 OUTPUT LOOP GTE02210
```

FIGURE 40 PARTIAL PRINTOUT OF TRIM ROUTINE

Figure 41 is a list of digital computer points for input of analog (voltage) signals to the computer. These points are programmed and assigned VTXXX numbers. Points P18 through P39 were points used with the EK 14 chassis. Points P40 through P63 are points used for engine variable inputs. Some variables may be read by selecting the VTXXX numbers in psi and °R multiplied by 10^x. These numbers are used to monitor operation of various circuits.

Figure 42 is a partial list of VTXXX numbers which may be read out to monitor computation and may also be output through selected DAC signals for recording. Any VTXXX assigned in the computational programs may be selected.

COMPUTATIONAL BLOCK DIAGRAMS

A computational block diagram was prepared for operation of the J85-7 engine which was installed in the cell at the start of this project. The diagram was programmed and that program was changed and varied as the project progressed. The program is known as the Bendix control. Some part of the program were deleted and the resultant program became known as the Bounds control.

Both control programs contain many of the same functions. The Bounds control is for the purpose of starting the engine and limiting operation to a safe region. All safety and logic routines, engine geometry control, power lever routines and fuel valve request are common to both programs. All controls on fuel to be investigated with the Bounds program are input in the fuel valve request routine. If the control under investigation involves geometry change, the geometry program is changed.

The diagram of Figure 43 presents an overview of the control programs. The bounds program does not contain the proportional burner pressure and temperature controls nor the proportional plus integral temperature and $\Delta P/P$ controls. The parameters near the bottom of the figure are representative of data routines which are incorporated in programs. Engine rotor acceleration, acceleration divided by flow and fuel flow integrated over an acceleration period have also been programmed for some tests.

```
407    ANALT LD    3 P18                                      GTE03980
408          STO   2 VT110                                    GTE03990
409          LD    3 P19                                      GTE04000
410          STO   2 VT111                                    GTE04010
411          LD    3 P20                                      GTE04020
412          STO   2 VT112                                    GTE04030
                                   ↕
440          LD    3 P34                                      GTE04310
441          STO   2 VT126                                    GTE04320
442          LD    3 P35                                      GTE04330
443          STO   2 VT127                                    GTE04340
444          LD      =50                                      GTE04350
445          STO   L TRIMS                                    GTE04360
446    ENDTM EQU     *                                        GTE04370
                                   ↕
456          LD    3 P40               PB                EK15 GTE04470
457          STO   2 VT231                                    GTE04480
458          M       =20000                                   GTE04490
459          SLT     1                                        GTE04500
460          STO   2 VT102        PB=100XPSI                  GTE04510
461          LD    3 P41               DP                EK15 GTE04520
462          STO   2 VT232                                    GTE04530
463          M       =30000                                   GTE04540
464          SLT     1                                        GTE04550
465          STO   2 VT103        DP=1000XPSI                 GTE04560
                                   ↕
523          LD    3 P57               T5                EK18 GTE05140
524          A       =6100                                    GTE05150
525          STO   2 VT248                                    GTE05160
526          S       =4600                                    GTE05170
527          STO   2 VT098        T5=10XF                     GTE05180
528          LD    3 P58               PLA1              EK18 GTE05190
529          STO   2 VT249                                    GTE05200
530          LD    3 P59               PLA2              EK18 GTE05210
531          STO   2 VT250                                    GTE05220
532          LD    3 P60               LEAD-LAG SIGNAL   EK18 GTE05230
533          STO   2 VT251                                    GTE05240
534          LD    3 P61                                 EK18 GTE05250
535          STO   2 VT252                                    GTE05260
536          LD    3 P62                                 EK18 GTE05270
537          STO   2 VT253                                    GTE05280
538    *                          64TH POINT                  GTE05290
539          LD    3 P63                                      GTE05300
540          STO   2 VT254                                    GTE05310
```

FIGURE 41 PARTIAL PRINTOUT OF ANALOG VOLTAGE INPUT POINTS

```
VT231 EQU   +104            BURNER PRESS    EK15P1GTE14160
VT232 EQU   +105        DP= P3-PS       EK15P2     GTE14170
VT233 EQU   +106            P2 COMP INLET  EK15P3 GTE14180
VT234 EQU   +107            BLEED PRESS P23EK15P4 GTE14190
VT235 EQU   +108            POSITION INPUT EK15   GTE14200
VT236 EQU   +109            ANALOG SPEED INST     GTE14210
VT237 EQU   +110            BLEED PRESS P2.4   P5 GTE14220
VT238 EQU   +111            BLEED PRESS P2.5   P6 GTE14230
VT239 EQU   +112            TURBINE DISCH PRES P8 GTE14240
VT240 EQU   +113            ENGINE DISCH PRES P9  GTE14250
VT241 EQU   +114        PRESSURE RATIO            GTE14260
VT242 EQU   +115                                  GTE14270
VT243 EQU   +116                                  GTE14280
VT244 EQU   +117                                  GTE14290
*                THIRD  STRIP              EK18   GTE14300
VT245 EQU   +118            COMP TEMP INLET    TA GTE14310
VT246 EQU   +119            COMP TEMP DISCH    TB GTE14320
VT247 EQU   +120            TURBINE INLET      TC GTE14330
VT248 EQU   +121            TURBINE DISCH      TD GTE14340
VT249 EQU   +122            POWER LEVER      PLA1 GTE14350
VT250 EQU   +123            POWER LEVER      PLA2 GTE14360
VT251 EQU   +124            FILTER-LEAD-LAG VAR   GTE14370
VT252 EQU   +125            SPARE                 GTE14380
VT253 EQU   +126            SPARE                 GTE14390
*               SPARE POINT                       GTE14400
VT254 EQU   +127                                  GTE14410


VT090 EQU   -90                                   GTE15330
VT091 EQU   -91                                   GTE15340
VT092 EQU   -92                                   GTE15350
VT093 EQU   -93                                   GTE15360
VT094 EQU   -94                                   GTE15370
VT095 EQU   -95         T2=10XF DEG               GTE15380
VT096 EQU   -96         T3=10XF DEG               GTE15390
VT097 EQU   -97         T4=10XF DEG               GTE15400
VT098 EQU   -98         T5=10XF DEG               GTE15410
VT099 EQU   -99         ADJUSTMENT NUMBER SELECTED GTE15420
VT100 EQU   -100        ADJUSTMENT REGISTER NUMBER GTE15430
VT101 EQU   -101        SAFETY DIGITAL NUMBER     GTE15440
VT102 EQU   -102        PB=100XPSI                GTE15450
VT103 EQU   -103        DP=1000XPSI               GTE15460
VT104 EQU   -104        P2=1000XPSI               GTE15470
VT105 EQU   -105        P23-P2=100XPSI            GTE15480
VT106 EQU   -106        P24-P2=100XPSI            GTE15490
VT107 EQU   -107        P25-P2=100XPSI            GTE15500
VT108 EQU   -108        P5 =100XPSI               GTE15510
VT109 EQU   -109        P0 =1000XPSI              GTE15520
```

FIGURE 42 LIST OF VARIABLES AND ASSIGNED VTXXX

Computer computations were divided into groups and each group was represented by a block diagram. These block diagrams are indicated on the simplified diagram of Figure 43. A simple block diagram is presented and discussed in the following paragraphs. The power lever is the controlling input to the computation. On the left-hand side of the diagram are listed the variable inputs and primary trim VTXXX numbers. On the right side of the diagram are listed computation outputs.

Rotor Speed Request

The power lever requests engine speed linearly with position. The specification engine control requests speed between 7,950 equal to 48% at idle to 16,542 RPM at 100%. Program speed request band in counts equal RPM is initially set at these values. Throttle voltage band is between 47.5 and 105%. These two speeds are requested by a throttle input voltage change of 2.9 volts between minimum to maximum. The resulting counts are divided by two and added to the low speed counts programmed to yield the request. Idle and maximum speed can be adjusted between limits to obtain a limited speed band. Also a minimum and maximum speed can be set through the interface and switched from one to the other.

Figure 44 is a block diagram illustrating the fuel control part of the computer program. The throttle voltage is -0.25 volt at minimum position corresponding to 47.5% "N" and is -3.15 volts at maximum position corresponding to 105% "N". This voltage is converted to a digital number, divided by two and added to the number 7,212 equal to 43.6% rpm. The number thus obtained is compared by a select high with a low speed limit equal to 7950 rpm plus one-eighth the setting of adjustment VT001 nominally zero. The value thus obtained is compared by a select low with 16542 minus one-eighth the setting of adjustment VT002 nominally zero. The output is the speed request with the number equal to the engine rpm being requested.

Adjustments VT001 and VT002 are divided by eight to prevent the low speed from exceeding the high speed request or the high speed request being less than the low speed request when the trims are at the maximum of 32767 counts. The adjustments can be changed in sign to yield numbers less than minimum throttle or greater than maximum throttle. Thus the full throttle range can be selected.

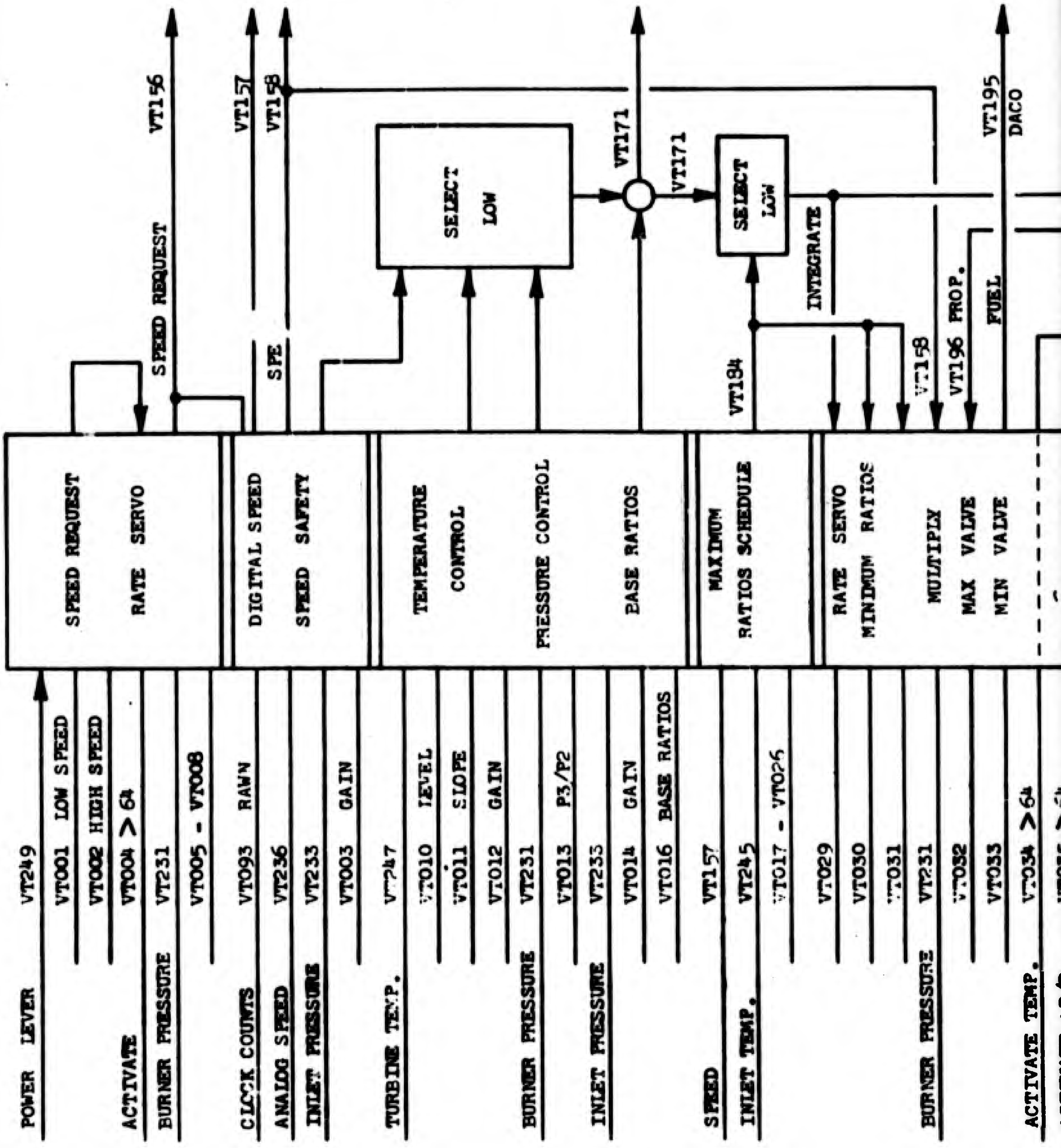
POWER LEVER
VT249
VT001 LOW SPEED
VT002 HIGH SPEED
ACTIVATE
VT004 > 64
BURNER PRESSURE
VT231
VT005 - VT008
CLOCK COUNTS
VT093 RAWN
ANALOG SPEED
VT236
INLET PRESSURE
VT233
VT003 GAIN
TURBINE TEMP.
VT247
VT010 LEVEL
VT011 SLOPE
VT012 GAIN
BURNER PRESSURE
VT231
VT013 P3/P2
INLET PRESSURE
VT233
VT014 GAIN
VT016 BASE RATIOS
SPEED
VT157
INLET TEMP.
VT245
VT017 - VT026
VT029
VT030
VT031
BURNER PRESSURE
VT231
VT032
VT033
ACTIVATE TEMP.
VT034 > 64
SPEED REQUEST
RATE SERVO
DIGITAL SPEED
SPEED SAFETY
TEMPERATURE
CONTROL
PRESSURE CONTROL
BASE RATIOS
MAXIMUM
RATIOS SCHEDULE
RATE SERVO
MINIMUM RATIOS
MULTIPLY
MAX VALUE
MIN VALUE
SPEED REQUEST
VT156
SPE
VT157
VT158
SELECT
LOW
VT171
VT171
SELECT
LOW
VT184
INTEGRATE
VT158
VT196 PROP.
FUEL
VT195
DACO

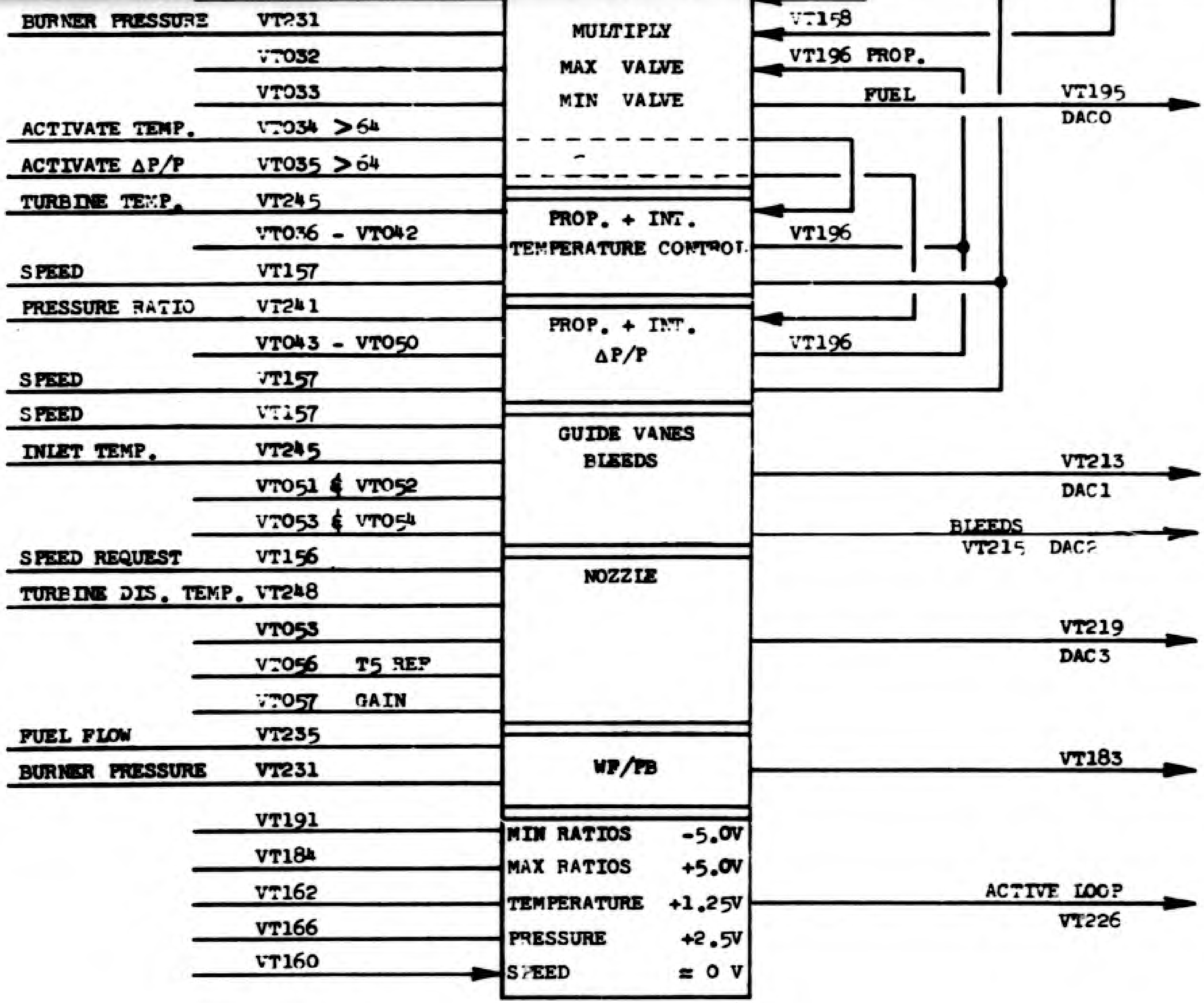

FIGURE 43 OVERVIEW OF CONTROL PROGRAM

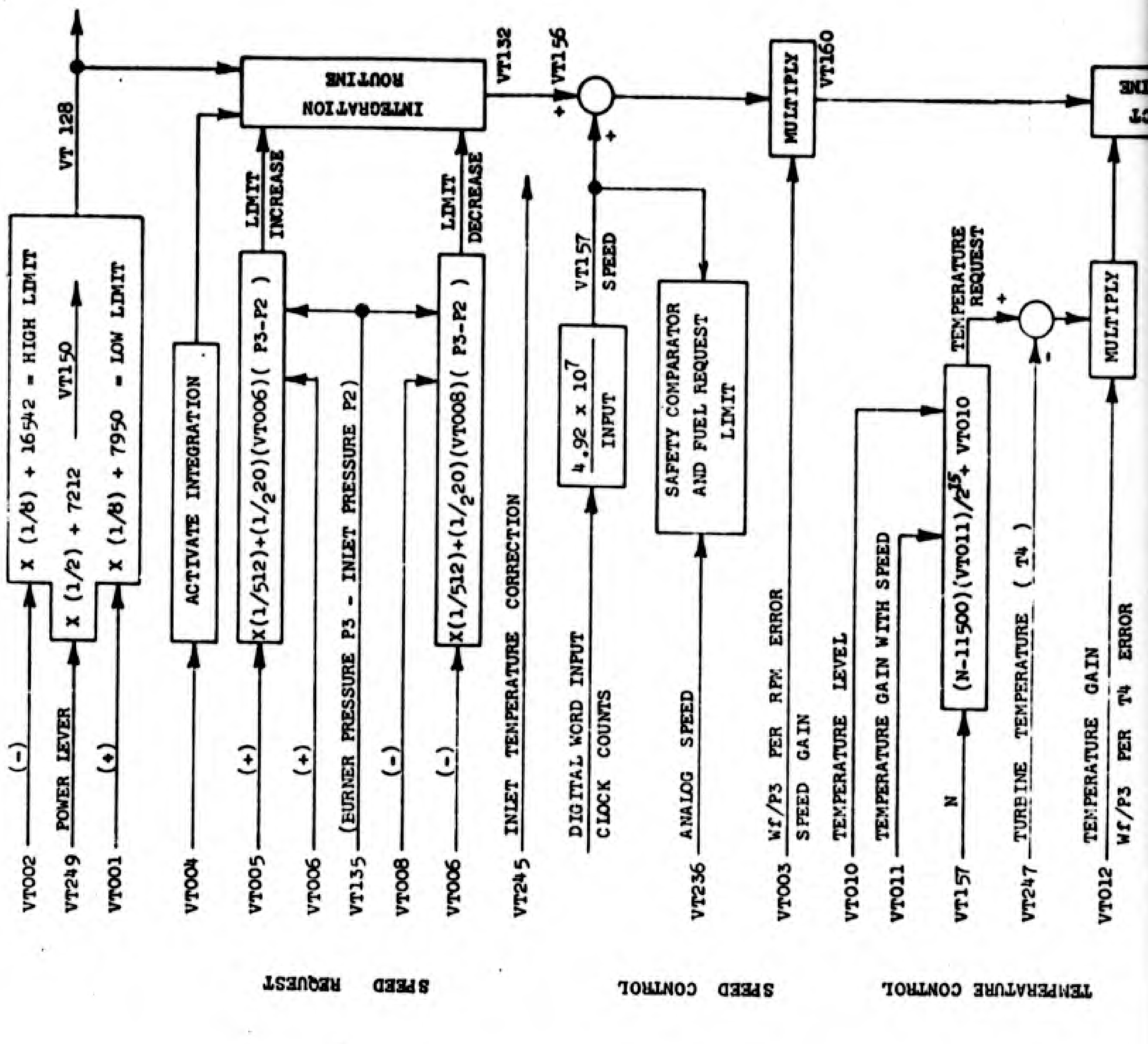
SPEED REQUEST
VT002 (-)
VT249 POWER LEVER
VT001 (+)
X (1/8) + 16542 = HIGH LIMIT
X (1/2) + 7212
VT150
X (1/8) + 7950 = LOW LIMIT
VT 128
VT004
ACTIVATE INTEGRATION
VT005 (+)
X(1/512)+(1/220)(VT006)(P3-P2)
VT006 (+)
VT135 (BURNER PRESSURE P3 - INLET PRESSURE P2)
VT008 (-)
VT006 (-)
X(1/512)+(1/220)(VT008)(P3-P2)
LIMIT INCREASE
LIMIT DECREASE
INTEGRATION ROUTINE
VT132
VT245 INLET TEMPERATURE CORRECTION
SPEED CONTROL
DIGITAL WORD INPUT / CLOCK COUNTS
4.92 x 10^7 / INPUT
VT157 SPEED
+ VT156
+
VT236 ANALOG SPEED
SAFETY COMPARATOR AND FUEL REQUEST LIMIT
VT003 Wf/P3 PER RPM ERROR / SPEED GAIN
MULTIPLY
VT160
TEMPERATURE CONTROL
VT010 TEMPERATURE LEVEL
VT011 TEMPERATURE GAIN WITH SPEED
VT157 N
(N-11500)(VT011)/2^15 + VT010
TEMPERATURE REQUEST
+
-
VT247 TURBINE TEMPERATURE (T4)
VT012 TEMPERATURE GAIN / Wf/P3 PER T4 ERROR
MULTIPLY

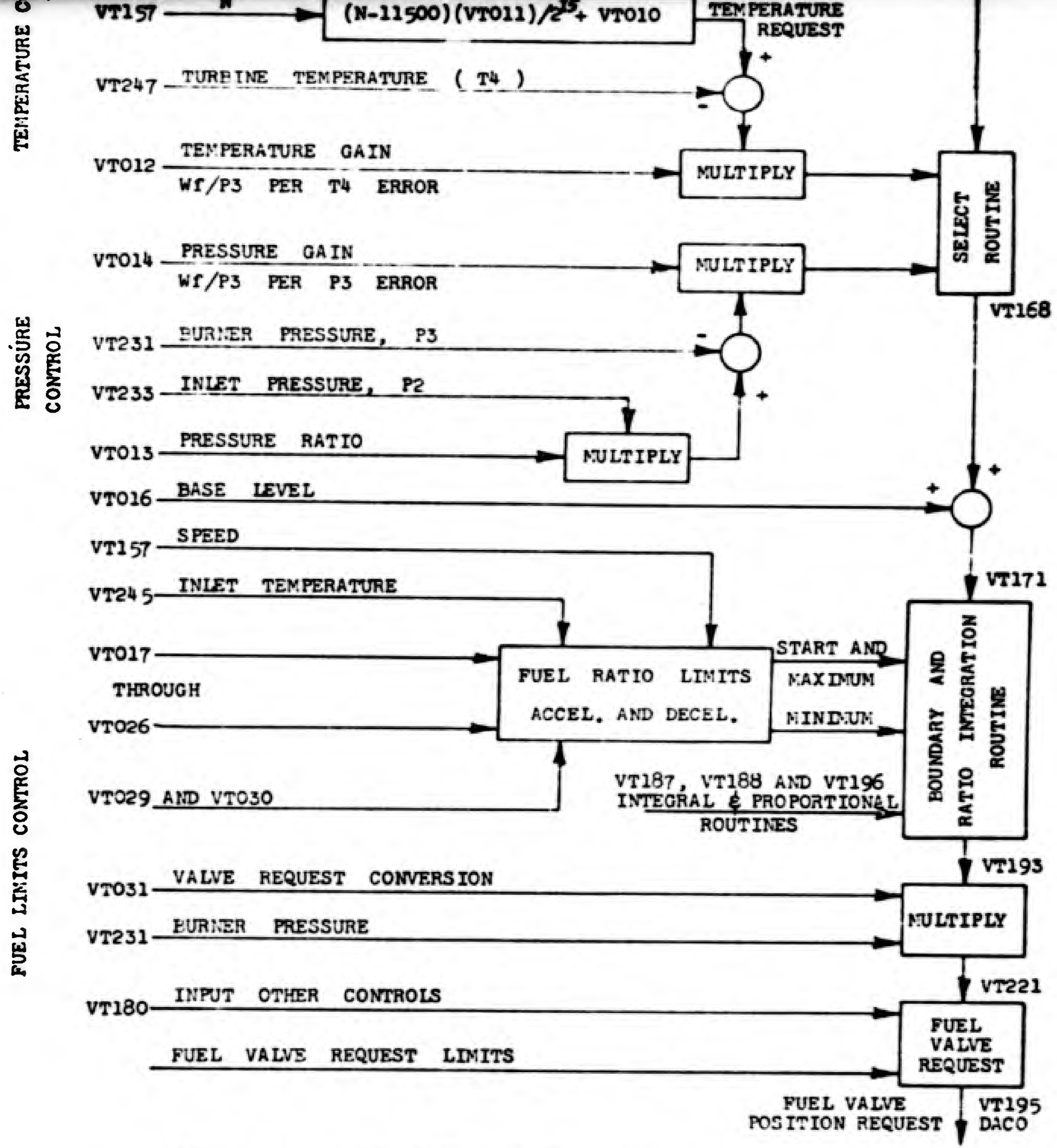

Figure 44 -- Block Diagram of Fuel Flow Control

Although the power lever input is normally used for speed request, the value may be used for a request of any operating variable or parameter which might be indicative of engine power such as engine pressure ratio.

The request obtained is used directly as speed request if adjustment VT004 (nominally zero) is less than 64. When greater than 64, the speed request initiates a programmed command which allows integration of the speed request up and down proportional to burner pressure times a constant plus a set value. VT005 is nominally set at 6000 which is divided by 2^9 to yield 11. Due to the integration rate of the computer, a speed change of 750 RPM per second is requested due to this value. This number is added to a number proportional to burner pressure minus inlet pressure and the sum in used. VT006 is used as a constant of proportionality. VT006 is nominal set at 9200 which will yield 25 or 1600 rpm/second near idle.

Deceleration control is accomplished in a similar but opposite manner with VT007 and VT008 minus. When the difference between VT128 and VT132 is low, the integration is on this difference.

This integration of speed request is included in both programs to allow a controlled speed change while investigating engine variables. The throttle request is a definite signal which is unaffected by engine variable change. The difference between request and speed yields a definite direction of a transient, and the transient will be followed over the speed range requested. This routine allows study of control action during simulated pilot lever motion. The action is from a snap to a slow easy change request.

Engine maximum speed request is reduced at low compressor inlet temperature. At 395°R the maximum speed is reduced to 15,542 RPM and increases linearly with temperature from 15,542 to 16,542 at 445°R. The value computed is compared with speed request by a select low to yield the speed request.

Speed Control

The speed request is compared to engine speed to yield a speed error which by a gain is converted to ratios in counts. Nominally one rpm error is equal to .4 ratios counts. Approximately 400 counts are required from steady state to maximum acceleration. Figure 44 illustrates the speed sensing circuit and control circuit.

Speed input is by digital word, the value of which is clock counts per revolution or some factor times a revolution. The clock counts are divided into a constant to yield RPM in which counts obtained are numerically equal to the RPM. A validity speed logic is incorporated in the computer program to insure a valid reading. In addition an analog speed signal is input and the digital value is compared to the analog value. If a difference of 800 RPM occurs, the fuel valve request is set to yield a maximum flow of near idle value. If a failure occurs during start, this value would be too high. The operator should monitor speed VT157 during a start and warn the engine operator if VT157 does not perform properly.

The gain of the speed control is set at 6553 counts. The error times the gain divided by 2^{14} yields 0.4 ratios counts per RPM error. A count of 32.8 is about one actual ratio. An error of 81 RPM will cause one actual ratio change. Since steady state ratio is near 20 and 81 RPM is near 0.5 percent at maximum speed, the fuel gain with speed is near ten on basis of percent/percent.

Proportional Temperature and Pressure Control

Proportional temperature and pressure control are illustrated by Figure 44. Outputs of these two controls are compared with the speed control in select lows to control whichever of the three variables is high relative to the set requested values.

The temperature request is set at a fixed number plus a function of engine speed when the speed exceeds 11500 RPM. The temperature is set high (2200°R) and must be decreased to obtain control during engine tests. Computer counts of the temperature control is ten (10) times the temperature in degrees Rankine. The values can be called out and read easily in engineering units.

The pressure request is set proportional to compressor inlet pressure. Nominally the pressure is set near the 70% speed value. This setting is a safety measure to prevent high speed in event of a high speed request at starting. Adjustment VT013 sets the burner-pressure-inlet-pressure ratio. At VT013 = 16384, the ratio is eight. At this value, pressure will be removed from control.

Error in the temperature and pressure loops are converted to ratios in counts by gain factors. Ten temperature counts are nominally 2.5 ratios counts or one degree is approximately .08 actual ratios. This gain is approximately 8 percent/percent. Nominally at 50 psia burner pressure, the pressure gain is about 2.5 percent/percent.

Ratios request from the propotional control devices is VT168. This ratio is driven to zero by a base ratios number which is nearly equal to required to run. In computer ratios counts, the base ratio is set at 650. VT168 and the base ratios are added to yield VT171. VT171 is limited by the acceleration and deceleration ratios.

Fuel Ratios Computations

The numerical numbers used for this program are the same 32.8 counts/(W_f/P_3) actual as used with the J85-7 program and fuel system. A multiplier is included at the output of the schedule to convert counts to compatible voltage values for the new fuel system and to allow entire schedule shift. A specification plot of W_f/P_b is generally rather complex involving a wide range of temperatures based on computation, experience and testing of the engine. The maximum ratios computation of this program is based on a narrow compressor inlet temperature band of 0° F to 130° F. Further, the schedule is approximated by functions of N and T. The bands approximate the cam schedule of the J85-5 engine.

The fuel pressure ratios used in the program are given by the following equations for various speed regions.

Start Flow WF/PB $= 12 + .65 \ [(1 + .0024 \ (T2-460)] \ N\%$

$= 34 + .00079 \ (T2-590) \ N\%$

Acceleration Limits $= -11 + 0.65 \ N\%$

$= 37 - .0023 \ (T2-460)$

Back Slope : $= 1.9 \ (115 - N\%)$

The maximum ratios schedule is divided into five segments as indicated by the above five equations. The first two segments are in the start regime to 60% speed. The second two segments are in the acceleration regime and the fifth segment is the back slope at high speeds. Deceleration schedule is established by either a fraction of the acceleration schedule (VT029) or a fixed minimum ratios (VT030). The ratios are multiplied by the burner pressure to establish the fuel request.

The maximum and minimum ratios schedules may be increased or decreased to change transient response of the engine. These limits are used as boundaries in an integration routine. The routine contains inputs for proportional plus integral controls. The routine is activated by the output of speed, temperature and pressure proportional control computation.

Fuel Valve Position Request

The output of the integration routine is multiplied by burner pressure and a conversion constant to yield a valve position request value. The program includes adjustable limits for values of the fuel request. A high and/or a low fuel can be set. With these values set a study of engine behavior between two fuel levels can be investigated.

The values from another fuel control loop is input into the program at this point. If another loop were in ratios and not in fuel flow values, the value could feasibly be input into the ratios part of the control along with the speed, temperature, and pressure controls.

Temperature Control, Proportional Plus Integral

The proportional plus integral control yields a control similar to a lead in the feedback. Figure 45 illustrates a control in which the temperature reference is a function of engine speed. Although the control is shown for turbine inlet temperature, turbine discharge temperature could be used. The request level (VT037) and the slope with speed (VT036) are adjustable.

Requested temperature is compared to actual temperature to produce an error. The error is used in both an integral and a proportional control. In the integral part, the rate at which fuel pressure ratios increase is controlled and in the proportional part, ratios are proportional to error. The lead is equal to proportional gain divided by the integral gain. This lead is multiplied by the integral gain (VT038) to obtain the proportional gain.

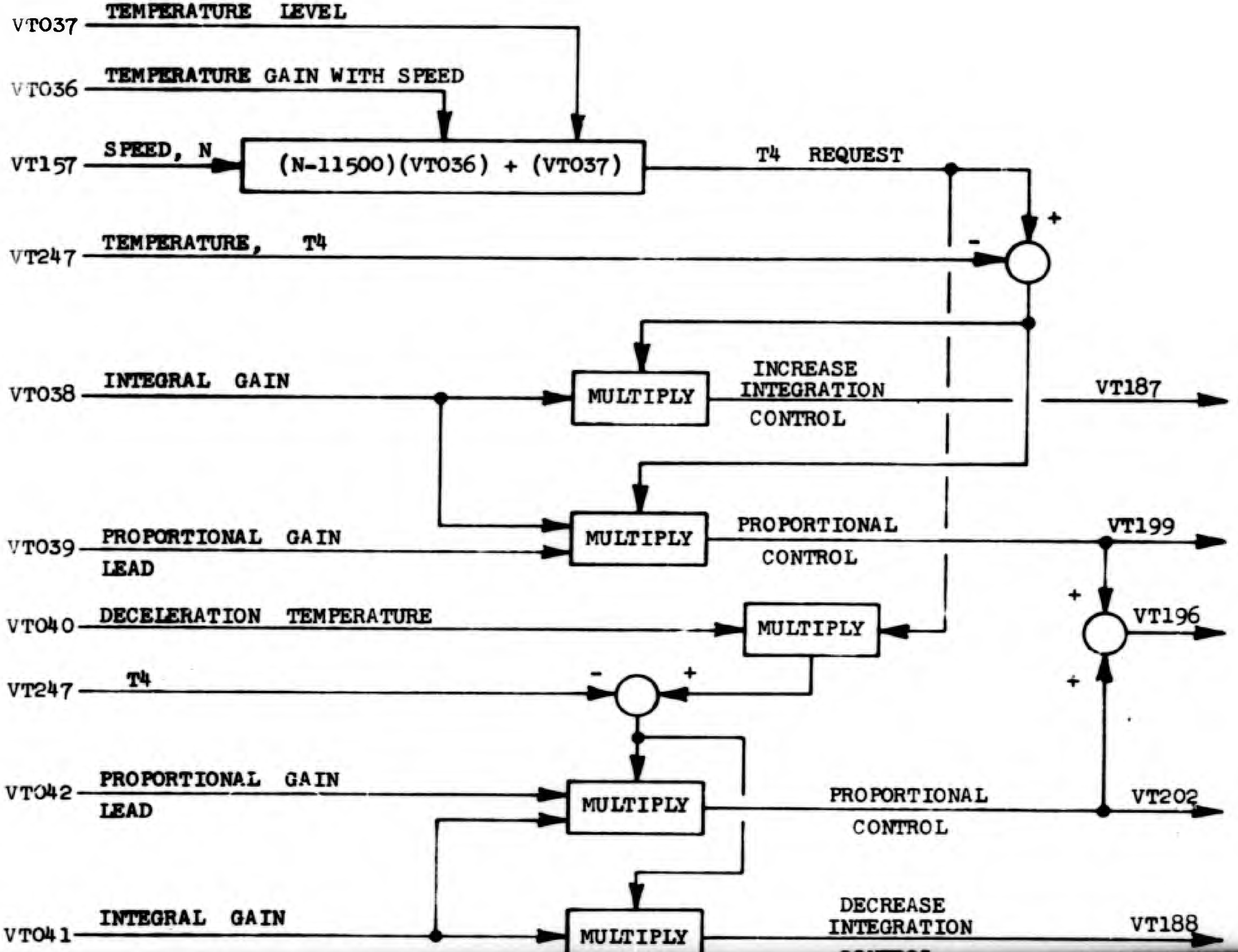
VT037
TEMPERATURE LEVEL
VT036
TEMPERATURE GAIN WITH SPEED
VT157
SPEED, N
(N-11500)(VT036) + (VT037)
T4 REQUEST
VT247
TEMPERATURE, T4
+
-
VT038
INTEGRAL GAIN
MULTIPLY
INCREASE INTEGRATION CONTROL
VT187
VT039
PROPORTIONAL GAIN LEAD
MULTIPLY
PROPORTIONAL CONTROL
VT199
+
VT196
+
VT040
DECELERATION TEMPERATURE
MULTIPLY
VT247
T4
-
+
VT042
PROPORTIONAL GAIN LEAD
MULTIPLY
PROPORTIONAL CONTROL
VT202
VT041
INTEGRAL GAIN
MULTIPLY
DECREASE INTEGRATION
VT188

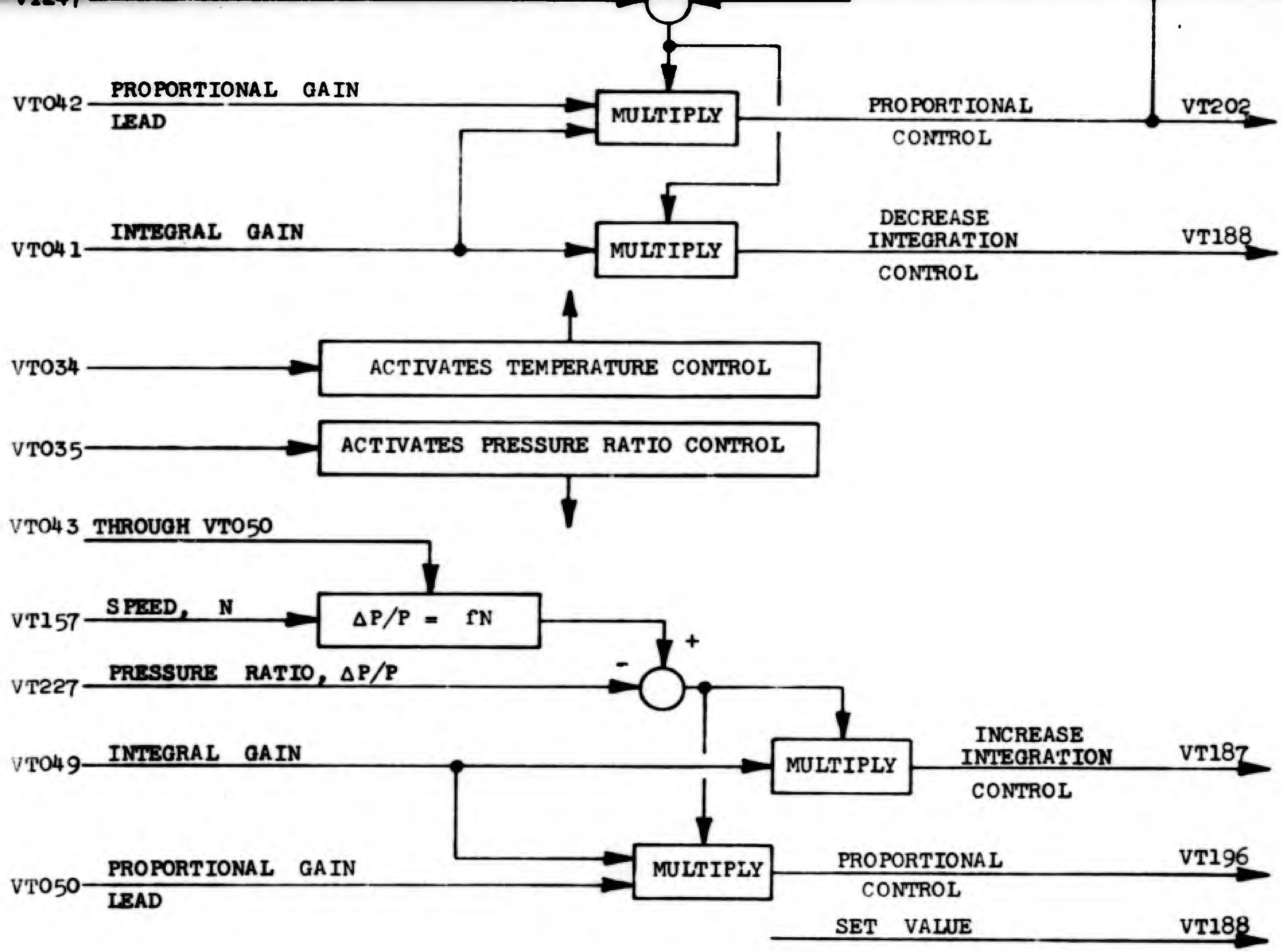

Figure 45 -- Block Diagram of Proportional Plus Integral Control

The deceleration reference temperature is set at a fraction of the acceleration temperature by VT040. Control is similar to the acceleration proportional plus integral. Increasing integration fuel is equated to VT187 and decreasing integration is equated to VT188. The two proportional parts are summed to yield VT196. The setting of VT039 provides the lead.

Pressure Ratio Control, Proportional Plus Integral

The pressure ratio (compressor discharge airflow) control is proportional plus integral similar to the temperature control. A reference pressure ratio is established by a three segment schedule indicated as a function of speed. The low speed part of the schedule sets the value for starting. Most control is based on the mid-range segment. The high speed segment is used to change the acceleration control value as the pressure ratio changes at high speed. All three segments have a slope and intercept controlled by adjustments VT043 through VT050.

The actual pressure ratio is compared to the reference schedule to obtain an error. The error controls an integration rate of ratios and a proportional effect on ratios. The proportional trim (VT050) is multiplied by the integral gain (VT049). Thus, the proportional trim becomes a lead value of the proportional plus integral control.

Outputs of the airflow control are the same as the temperature control. Manipulation of adjustments VT034 and VT035 calls the loop desired during an investigation. Values of VT187, VT188, and VT196 are set nominally to prevent interference with the basic control when neither the temperature nor the airflow control is being used.

Inlet Guide Vane and Bleed Controls

The compressor inlet guide vanes and bleeds are controlled to schedules. The schedule is linear with speed from low speed position to high speed position. Low and high speeds at which the vanes are at extremes vary with compressor inlet temperature.

Figure 46 illustrates the computer schedule. The engine speed in RPM's is equal to the computer counts. Low and high speed extreme positions are computed and output in DAC volts. Voltage from the DAC output is equal to the feedback potentiometer voltage of opposite sign.

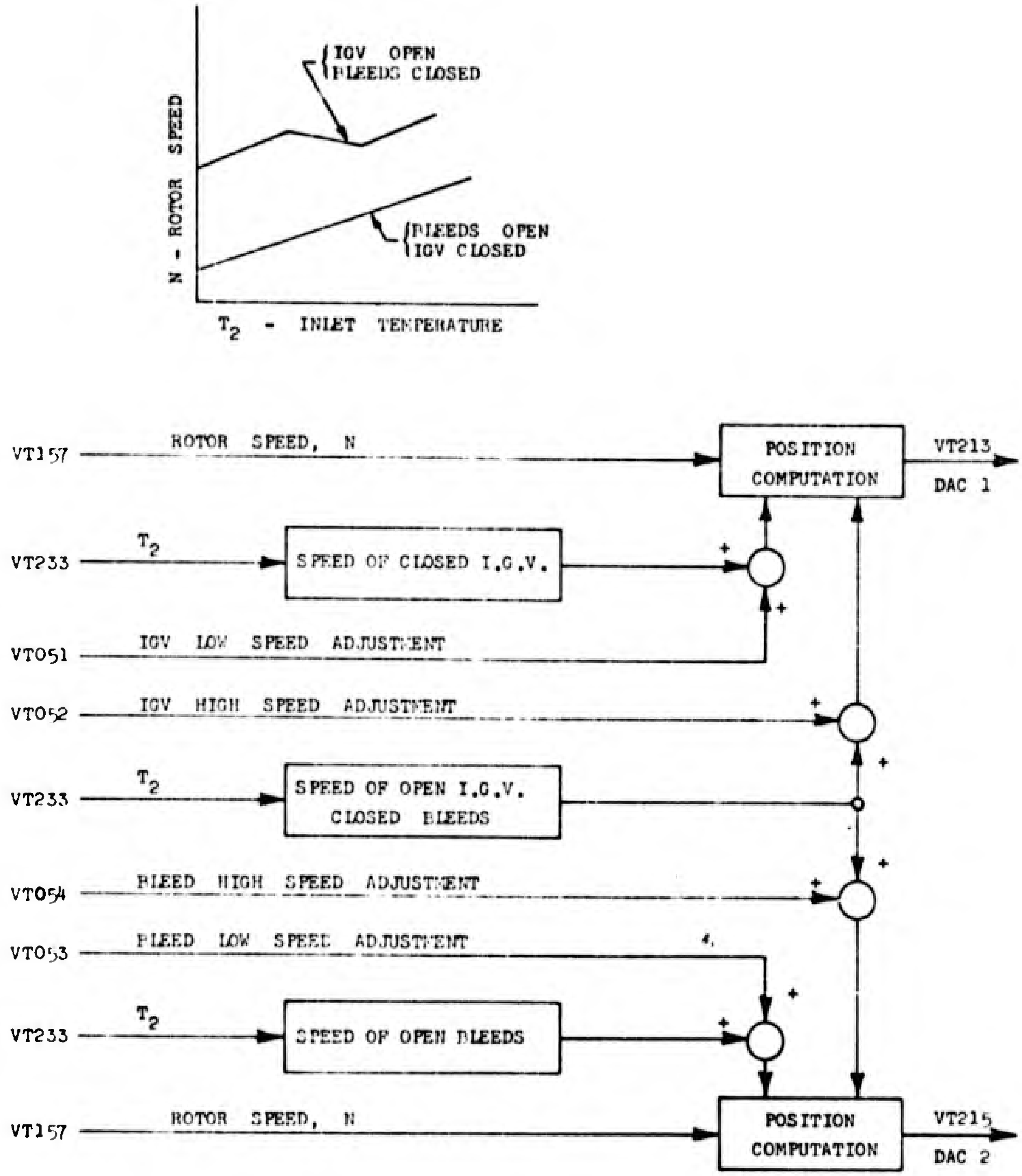

Figure 46 - Compressor Guide Vanes and Bleeds Schedule and Computations

The schedule is computed by the following equations:

$$\text{POSITION REQUEST} = \text{POS LO} + (\text{POS HI} - \text{POS LO}) \times \frac{N - N1CG}{N2CG - N1CG}$$

POS LO and POS HI are the low speed and high speed extreme positions as shown on the figure. N is the existing speed and N1CG and N2CG are the low and high speed values of the compressor geometry schedule. These speeds are functions of the compressor inlet temperature.

The equation of N1CG is given by:

$$N1CG = 11800 + (T2 - 420°)\ 1.32$$

The high speed (bleed closing point) is determined by three functions with temperature.

$$N2CG = 14,900 + (T2 - 420°)\ 1.72$$

$$N2CG = 16,000 - (T2 - 484°)\ 4$$

$$N2CG = 15,800 + (T2 - 534°)\ 15.8$$

To each N1 or N2 is added a speed trim value VTXXX in order to change the range of speed over which the geometry moves.

Block diagrams for each of the guide vanes and the bleeds are shown by Figure 46. The guide vanes are controlled by DAC #1 output. The bleeds are controlled by DAC #2 output.

Exhaust Nozzle Control

The nozzle is controlled by positioning the input lever to the nozzle drive power unit. This lever is positioned by a throttle schedule and by closed loop control of T5 by the engine parts list system. The control by the IBM 1800 computer system is by speed request VT156 and by T5. Figure 47 shows the nozzle schedule.

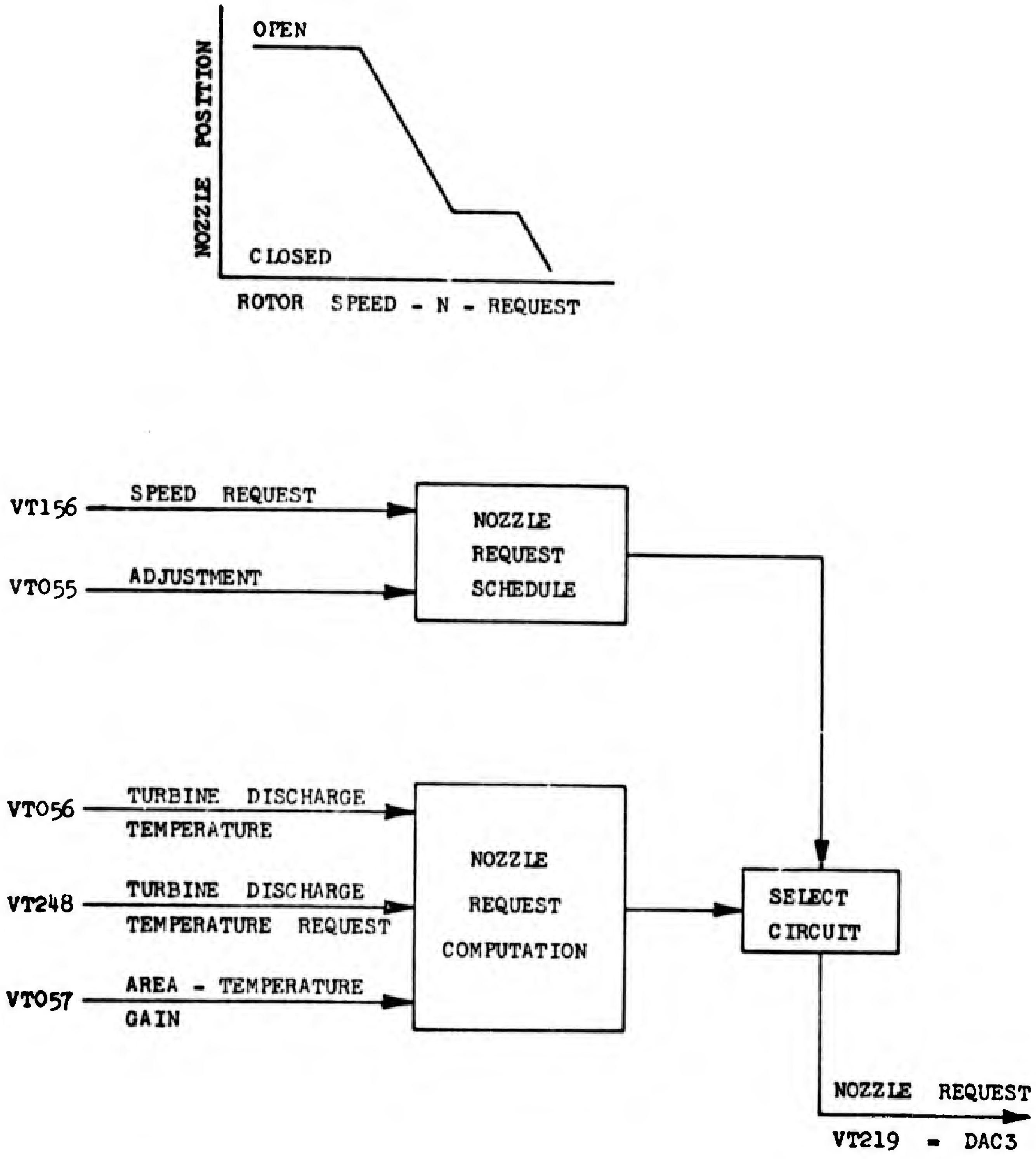

Figure 47 - Exhaust Nozzle Control

The schedule equations are based on speed request as follows:

N Request	Nozzle F/B Volts	DAC #3 Counts
Less than 10130	-3.72	12200
10130 to 14700	-3.72 - 1.28	12200 to 4190
14700 to 16042	-1.28	4190
16042 to 16542	-1.28 to -0.2	4190 to 655

A simple proportion control of T5 opens the nozzle when T5 exceeds its set value. VT055 may be used to set a constant nozzle in an investigation range. The control temperature level is set by adjustment VT056.

BOUNDS CONTROL PROGRAM

The previously defined control designated BXCNT contains the bounds control designated GTECT which is a complete control within itself. There is a throttle input and speed control, a fuel-pressure ratios control to bound excursions, geometry controls, and input points for controls under investigation. The program eliminates only the pressure, pressure ratio and temperature controls from the Bendix Control BXCNT. All applicable ST and VT numbers are retained along with all program inputs, constants, and safety features.

Power request and speed control of program BXCNT is retained (Figure 44). The program also includes the speed request integration loop. The power request is removed from the bounds control when other power control loops are being investigated. This is accomplished with current programming by increasing VT009 nominally zero to a value greater than 123.

When the Figure 44 is effective, VT009 is at zero and VT180, the input of another control is loaded at 21,000 to make any other fuel valve control ineffective. When VT009 is increased to a value greater than 123, VT161 (the BXCNT speed control) is loaded at 20,000 and speed control output computations are bypassed and the speed control of another program is used.

Proportional Plus Integral Control

The control shown by the computational block diagram of Figure 48 is used with the "Bounds" control program. This control contains a proportional plus integral speed control, a proportional plus integral temperature control, and an acceleration (speed rate limiting) control. The diagram indicates the method of computation, the names assigned to computation points and the method of input to the bounds control.

Names are assigned to various trim values and points in the computation. The STXXX values are set as standard trim values. These values are loaded into the VTXXX register where they may be changed to investigate effects of variation on control performance. Also, other VTXXX names are used to name points in the computation. The names, VTXXX, are used to store the values for use in the program and for call out to check operation of the computation. All VTXXX values may be called for readout.

The lower part of Figure 48 is the fuel valve request part of the bounds program. Any control program used with the bounds program is input at VT180. The program illustrated runs through the computation whether used or not and stored at VT164. When VT009 is increased above 123, VT164 is stored in VT180 and thus becomes part of the computation of the fuel valve position. When VT009 is at nominal value equal to zero, VT180 is loaded at 21000 and is removed from control effect. The fuel valve computation contains the following inputs:

VT184 -- Maximum valve position computed from engine acceleration fuel flow schedule.

VT142 -- A trim value which can be set to limit the maximum position.

VT158 -- A safety input derived from comparison of two engine speed signals.

VT148 -- Minimum valve position computed from engine deceleration fuel flow schedule.

VT147 -- Zero intercept of fuel flow due to fuel valve position feedback setting.

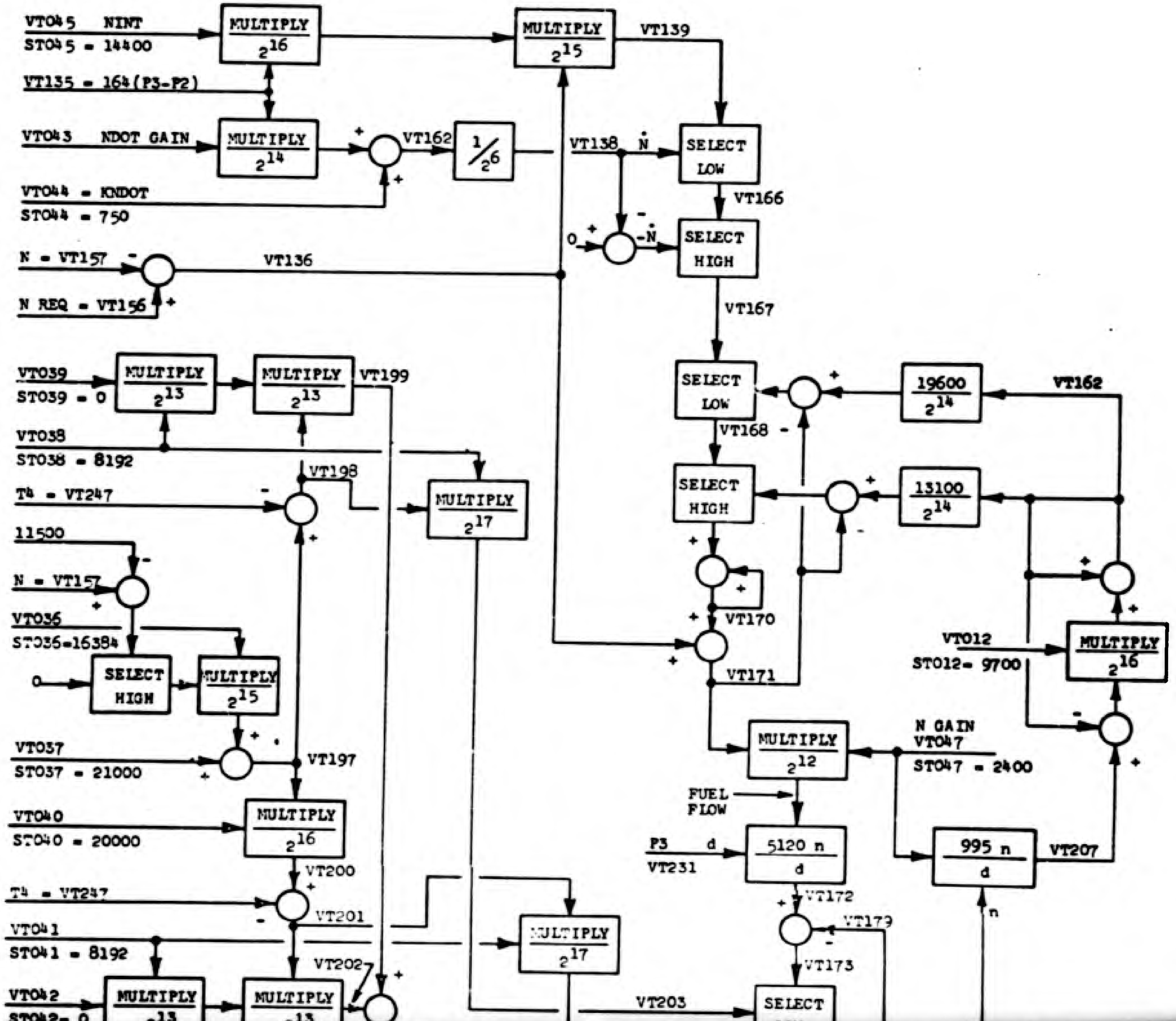
VT045 NINT
ST045 = 14400
VT135 = 164(P3-P2)
VT043 NDOT GAIN
VT044 = KNDOT
ST044 = 750
N = VT157
N REQ = VT156
VT136
MULTIPLY 2^{16}
MULTIPLY 2^{14}
VT162
$1/2^6$
MULTIPLY 2^{15}
VT139
VT138 Ṅ
SELECT LOW
VT166
SELECT HIGH
0
-Ṅ
VT167
SELECT LOW
VT168
SELECT HIGH
VT170
VT171
19600 / 2^{14}
13100 / 2^{14}
VT162
VT012
ST012= 9700
MULTIPLY 2^{16}
N GAIN
VT047
ST047 = 2400
MULTIPLY 2^{12}
FUEL FLOW
P3 d
VT231
5120 n / d
995 n / d
n
VT207
VT172
VT173
VT173
SELECT
VT039
ST039 = 0
MULTIPLY 2^{13}
MULTIPLY 2^{13}
VT199
VT038
ST038 = 8192
VT198
T4 = VT247
MULTIPLY 2^{17}
11500
N = VT157
VT036
ST036=16384
SELECT HIGH
MULTIPLY 2^{15}
VT037
ST037 = 21000
VT197
VT040
ST040 = 20000
MULTIPLY 2^{16}
VT200
T4 = VT247
VT201
VT041
ST041 = 8192
MULTIPLY 2^{17}
VT202
VT042
ST042= 0
MULTIPLY
MULTIPLY
VT203

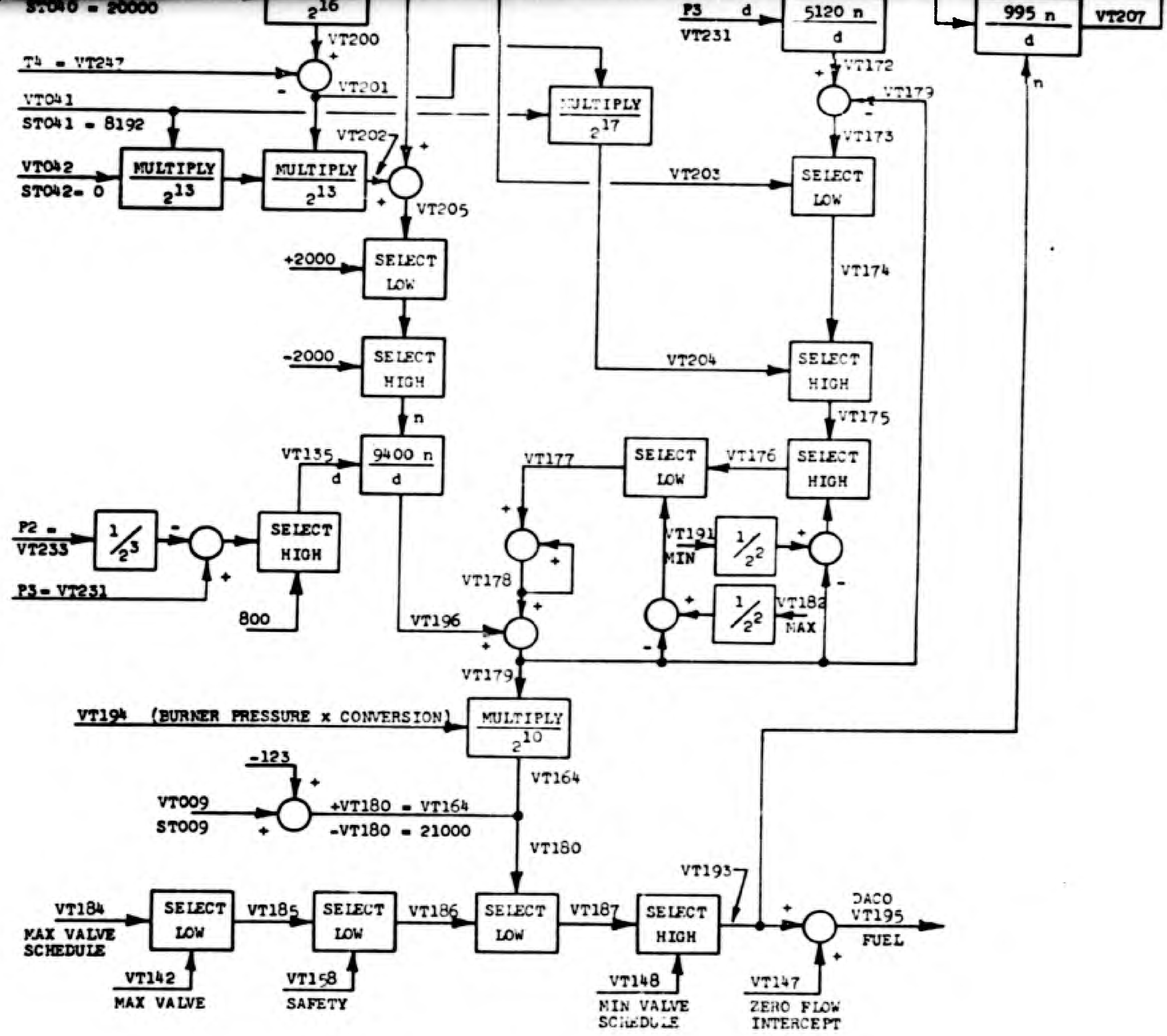

Figure 48 -- Block Diagram of Proportional Plus Integral Controls

Proportional Plus Integral Speed Control

The upper and right side of the diagram in Figure 48 shows the speed control. VT193 is used as a reference for the speed loop. The reference is multiplied by a conversion factor and divided by the speed loop gain. This computation results in a value of equivalent RPM. The value is lagged to allow a rate control of the fuel valve if desired. The lagged value is used to bound the speed control during speed excursions. VT136 is the proportional part of speed control and VT139 is the integral part of the speed control. VT136 is a speed rate limiting input. The sum of the integral and the proportional is multiplied by the loop gain.

The integral gain is multiplied by a factor proportional to the burner pressure minus the engine inlet pressure. In the loop this effectively yields a lead inversely proportional to the product. Error in speed VT136 is multiplied by the integral gain to yield the integration value. This value is compared to acceleration values which form maximum and minimum rates of change in speed. The output of the integration routine is summed with the speed error to obtain an effective RPM error VT171.

The output of the speed control is converted to ratio units. VT171 has units of RPM which when multiplied by the loop gain yields a number proportional to fuel flow. The fuel flow is divided by burner pressure to yield fuel-pressure ratios. These ratios are compared with temperature and limit controls.

Proportional Plus Integral Temperature Control

The proportional plus integral temperature control is the same as used in the Bendix control. A simple schedule of temperature is used. The temperature is constant to 11500 RPM at a value set by adjustment VT037. Above 11500 RPM, the temperature increases with speed. The increase is determined by adjustment VT036. The deceleration reference temperature is a fraction of the acceleration temperature. The fraction is determined by adjustment VT040. The integral gain becomes the loop gain and the proportional gain becomes the lead time constant. In the control shown, the proportional gains are nominally zero and are raised to demonstrate control action. The integral gains are nominally high to prevent interference with the speed loop and are decreased to obtain operation.

An error in temperature VT198 is multiplied by the integral gain to establish the increased integration value of the ratios integral loop, VT203. The decreasing integration limit VT204 is obtained by multiplying the deceleration temperature error VT201 by the integral gain VT041. The increasing proportional gain is formed by multiplying the integral gain VT038 by the time constant adjustment VT039. This gain times the error yields the proportional value which is limited and than divided by VT135 which effectively increases the lead effect at low burner pressure minus inlet pressure values. The deceleration proportional part of the control is treated similarly to the acceleration part.

The output of the control is bounded by the fuel-pressure ratios. These ratio limits are computed in the bounds program and are input to the integration routine. Output of the control VT179 is multiplied by VT194 which is equal to burner pressure times the fuel flow to valve conversion factor.

SECTION IV

ENGINE SIMULATION BY AN ANALOG COMPUTER

The engine simulation is based on deviation from steady state conditions due to fuel and nozzle variation from reference values. Six variables as functions of speed at 173 square inches nozzle area are generated. Compressor temperature rise is generated by a function of compressor pressure ratio. Turbine pressure ratio is calculated from compressor temperature rise and turbine temperature. The functions are for standard atmospheric conditions.

This analog simulation of the engine is used for digital computer program and system checkout. There are two switches in the instrument cabinet to switch from simulation to engine running. During engine simulation, engine fuel control and geometry components can be operated. A test pump provides fuel to fuel control and geometry controls. To check the complete nozzle control, the engine must be cranked also. Change in engine fuel system valving is required when changing from complete system checkout to engine running.

The simulation includes a fuel schedule and speed governor and a nozzle schedule and control. These simulations are used during programming and to study effects of program changes without using the digital computer.

The program includes dynamics of rotor speed, fuel control, nozzle control and simple lags for pressure and temperature sensors. Rapid response characteristics such as combustion dead time, transport lags, and volume effects are ignored. The low frequency characteristics are reasonably represented and stability characteristic of the simulation is fairly representative of engine operation.

DESCRIPTION OF SIMULATION

The block diagram of Figure 49 represents the various parts of the simulation. The following table is a list of symbols used in this section.

Variable			
Symbol	Name	Engine Station	Units
AN	Nozzle Area	8	Square Inches
K	Constant		
N	Engine Speed	Shaft	RPM
P_s	Static Pressure	3	PSI
P_t	Total Pressure	2	PSI
P_2	Inlet Pressure	2	PSI
P_3	Burner Pressure	3	PSI
Q	Torque	Shaft	Foot-Pounds
T2	Inlet Temperature	2	Degrees Rankine
T3	Burner Inlet	3	Degrees Rankine
T4	Burner Outlet	4	Degrees Rankine
T5	Turbine Outlet	5	Degrees Rankine
V	Voltage		Volts
WF	Fuel Flow		Pounds/Hour
$W\sqrt{\theta}/\delta$	Corrected Airflow	3	Pounds/Second
$\Delta P/P$	Pressure Ratio Sensor	3	Volts
ΔT	Differential Temp.	4	Degrees Rankine
ΔW_f	Differential Fuel	3	Pounds/Hour
τ	Time Constant		Seconds
η	Efficiency		--

Symbols

Inputs to the diagram are speed request or fuel valve position request and nozzle position request. The speed request may be generated in the simulation program or input from the engine control throttle. Fuel valve position request is from the digital computer program. The nozzle request may be generated in the program or input from the digital program.

A change in one of the input requests causes a change in the engine balance point. When the speed request is changed, the result is a change in fuel request. The fuel request change causes a change in torque which accelerates or decelerates the engine. A change in nozzle position request causes the nozzle to vary causing an effect on torque and the engine accelerates or decelerates.

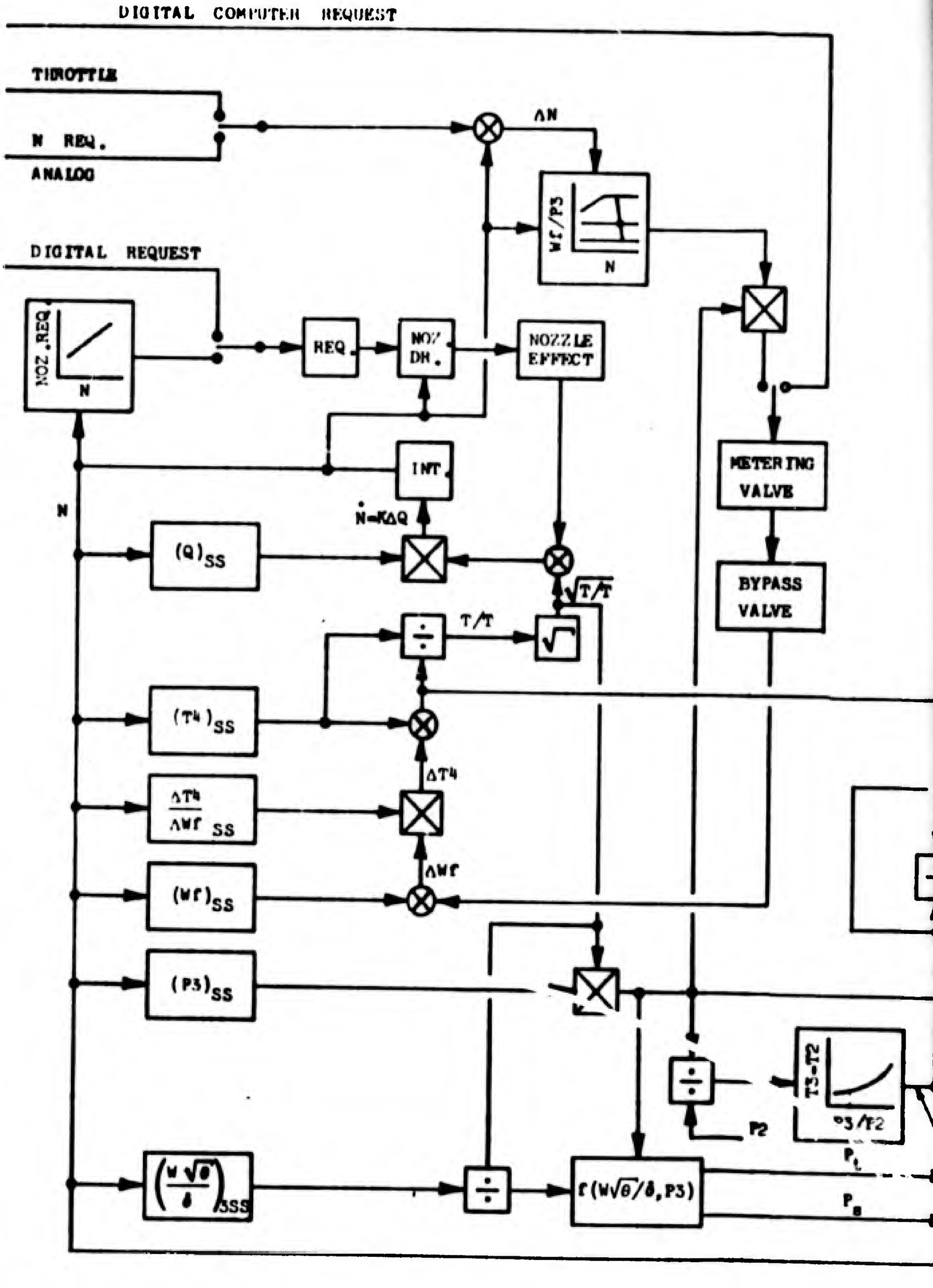
DIGITAL COMPUTER REQUEST
THROTTLE
N REQ.
ANALOG
ΔN
Wf/P3
N
DIGITAL REQUEST
NOZ.REQ.
N
REQ.
NOZ DR.
NOZZLE EFFECT
METERING VALVE
BYPASS VALVE
INT.
N
Ṅ=KΔQ
(Q)SS
√T/T
T/T
(T4)SS
ΔT4
ΔT4/ΔWf SS
ΔWf
(Wf)SS
(P3)SS
T3-T2
P3/P2
P2
PL
PB
(W√θ/δ)SSS
f(W√θ/δ,P3)

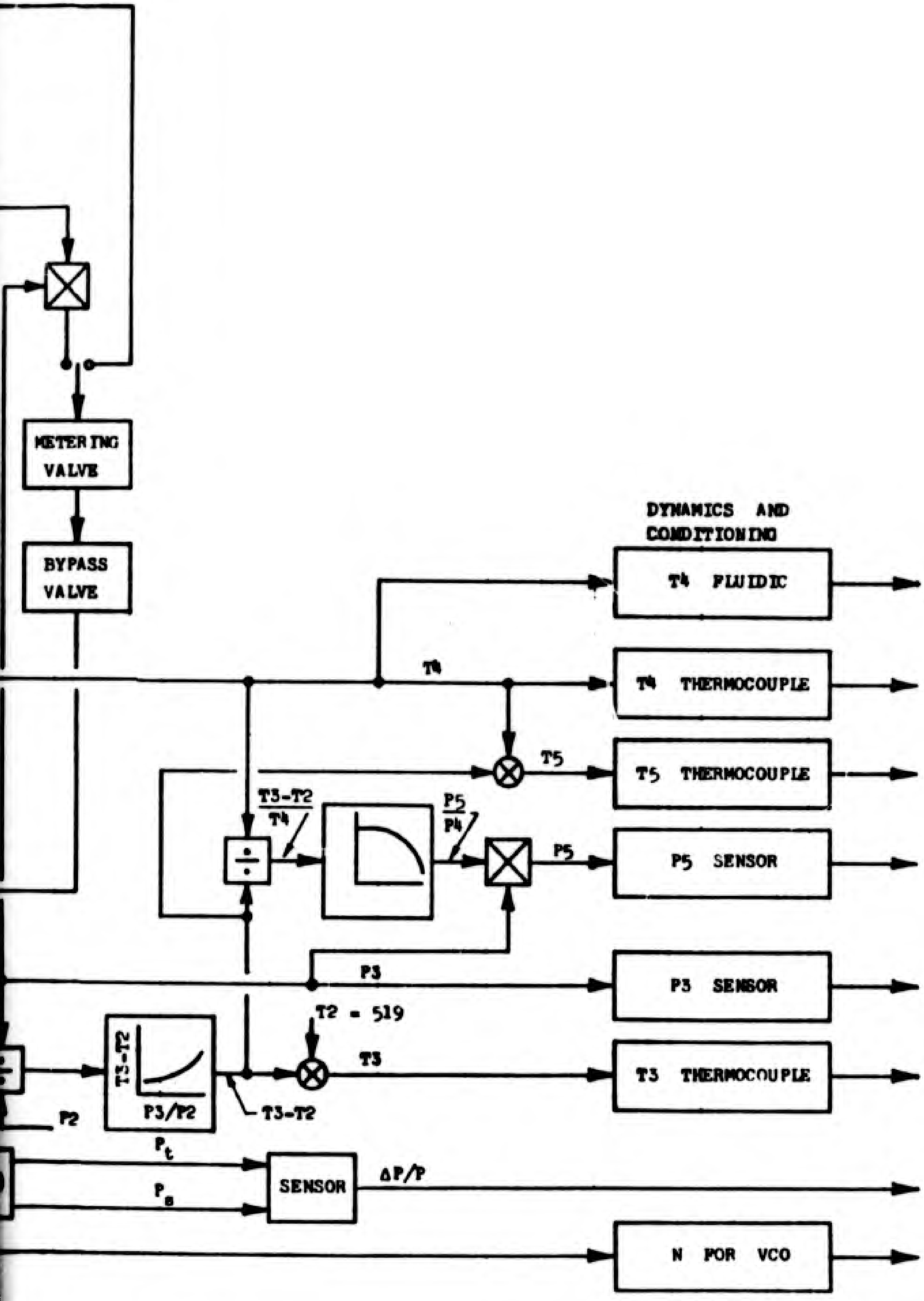

Figure 49 -- Simplified Diagram of Simulation

The block diagram shows four variables generated as functions of speed. The variables are used to compute shaft torque. These are values for a base nozzle area at steady state. Fuel flow, thus generated, is compared to the fuel output from the fuel control. Delta fuel is multiplied by the temperature to fuel gain to yield a delta temperature. This temperature is added to and the sum is divided by the steady state temperature. The square root is taken of this temperature ratio. The nozzle area effect is added to the square root of temperature ratio minus unity. The sum is multiplied by the shaft torque to obtain a torque unbalance. Rotor acceleration is proportional to the torque unbalance which is integrated to obtain rotor speed. The speed is input to nozzle request schedule. The nozzle position request is input to a request actuator which in turn requests the engine mechanical drive to change the nozzle area. The area obtained is used to compute the effect of the nozzle on engine torque.

A fuel schedule in the form of fuel/burner pressure ratios is generated in the program. A start schedule as a function of speed is generated up to a constant maximum ratio. A constant deceleration ratio is used. Also a constant base ratio near the steady state value is used as a null from which speed error is added or subtracted. The ratios value is multiplied by the burner pressure and the value of metering valve position request is input to the metering valve control. The metering valve control and the bypass valve control then generate the fuel flow.

Engine speed is used to generate two other variables. Steady state burner pressure at the base nozzle area is generated and multiplied by the square root of the temperature ratio to obtain the burner pressure. Steady state compressor discharge corrected air flow is also generated. This variable is divided by the square root of the temperature ratio to obtain the existing air flow for the conditions.

The air flow and burner pressure are used to generate a total pressure and a static pressure for simulation inputs to the air flow sensor. These two pressures are imperically based on data from a J85-7. The total pressure or high pressure is the simulated wall static pressure. The wall static is actually sensed on the engine as the burner pressure for use in digital computer programs. The static pressure is the pressure sensed in the last stator row blading.

Three engine variables are computed from previously generated variables. The compressor rise is computed from the compressor pressure ratio. Compressor discharge temperature is obtained by adding 519°R to the rise. This is applicable to standard conditions only. The turbine discharge temperature is assumed equal to turbine inlet temperature minus the compressor temperature rise. Turbine pressure ratio is computed from the compressor temperature rise and the turbine inlet temperature. The turbine discharge pressure is obtained by multiplying the ratio by the burner pressure.

Variables generated in the simulation are converted to values compatible with the values from the engine sensors. These outputs from the simulation are fed through the interface to the IBM 1800 computer.

Engine Block Diagram

Figure 50 is an engine block diagram. Schedules with speed of engine nominal values for shaft torque, turbine inlet temperature, fuel flow, burner pressure, compressor discharge corrected airflow, and temperature gain with fuel are shown by the table. The compressor pressure ratio is computed and the compressor temperature rise is determined by a function. Also shown is an imperically derived nozzle effect on torque. Inputs to the simulation are fuel flow and nozzle area.

The fuel flow from the control is compared to the nominal value for the engine speed existing. The difference is multiplied by the temperature to fuel gain to establish a ΔT. This ΔT is added to the nominal temperature to establish a transient temperature or the temperature required because of the nozzle effect. This temperature is divided by the nominal to obtain the temperature ratio.

The square root of the temperature ratio is taken to establish the primary effect on the engine variables. Change in temperature has a very small effect on air flow as a result, with a near choked turbine nozzle the burner pressure increases as the square root of the temperature increases. Similarly the compressor discharge corrected airflow decreases and the turbine torque increases due to the increased gas velocity.

The change in rotor torque causes the engine to accelerate or decelerate. Differential torque is the difference between the turbine torque and the compressor torque which is simulated as steady state torque.

Differential torque is established by subtracting unity from the square root of the temperature ratio and adding in the nozzle effect and multiplying by the nominal torque. $\Delta Q = Q_{tur} - Q_{comp} = Q_{ss} \quad [T_4/T_{ss} - 1 + .077 (A_n - 173)/(A_n - 80.9)]$ The nozzle effect was established from a plot $(T_4/T_{ss}) - 1$ vs nozzle area at various speeds. Change in speed changes the nominal values of the variables and a balance is established depending on the nozzle area and the fuel flow.

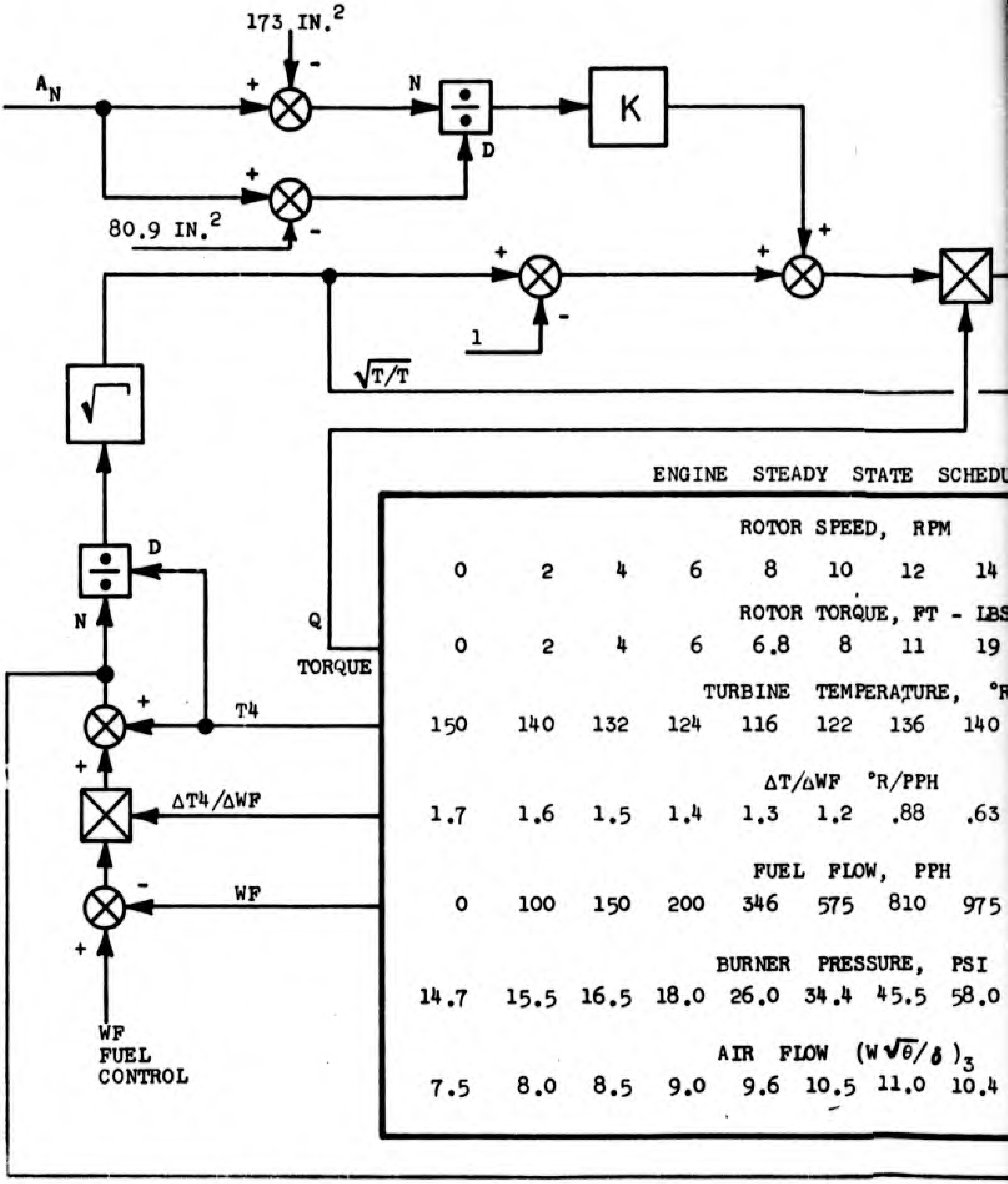

ENGINE STEADY STATE SCHEDU

ROTOR SPEED, RPM							
0	2	4	6	8	10	12	14
ROTOR TORQUE, FT - LBS							
0	2	4	6	6.8	8	11	19
TURBINE TEMPERATURE, °R							
150	140	132	124	116	122	136	140
ΔT/ΔWF °R/PPH							
1.7	1.6	1.5	1.4	1.3	1.2	.88	.63
FUEL FLOW, PPH							
0	100	150	200	346	575	810	975
BURNER PRESSURE, PSI							
14.7	15.5	16.5	18.0	26.0	34.4	45.5	58.0
AIR FLOW $(W\sqrt{\theta}/\delta)_3$							
7.5	8.0	8.5	9.0	9.6	10.5	11.0	10.4

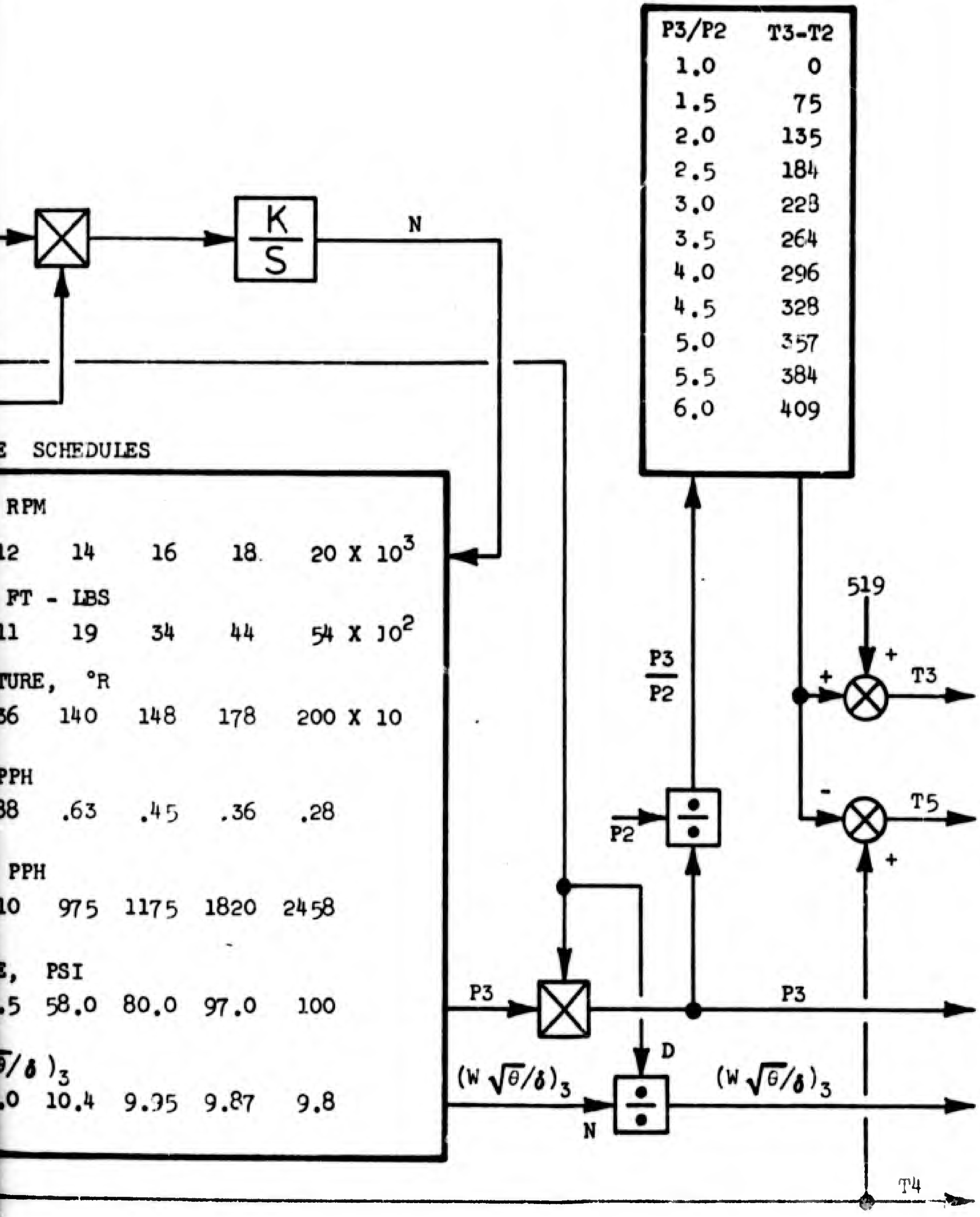

Figure 50 -- Engine Block Diagram

Compressor temperature rise is computed from the equation:

$$T_3 - T_2 = [(P_3/P_2)^{.286} - 1]\ T_2/\eta_c$$

The results of this computation is shown by the table on Figure 50.

Turbine temperature drop is nearly equal to the compressor temperature rise. Hence,T_5 is equal to T_4 - $(T_3 - T_2)$ as shown. Turbine pressure ratio is computed by:

$$P_5/P_4 = [1 - T_3/T_2)/.9\ T_4]^{3.9}$$

Fuel Control Block Diagram

Figure 51 illustrates the dynamic behavior of the fuel control valving. Both the metering valve and the bypass valve in the system behave as second order devices. The metering valve has a maximum velocity of 60,000 PPH/second, or from 100% speed flow to zero in .03 seconds.

The fuel system is shown in this relatively simple form because of effects of the dynamics are of secondary importance in the simulation. Adjustment can be made in the simulation to obtain engine performance duplication over a speed range. A more complex and accurate simulation requires the metering valve, the bypass valve, and servo valves in parallel off the pump discharge flow. System pressure and consequently fuel system dynamics are then influenced by the nozzle flow which establishes the back pressure on the metering valve.

Fuel Schedule and Governor

Figure 52 is a block diagram of the fuel schedule and governor for use during checkout and programming the analog computer. The scaling shown is ten times the value of the fuel valve feedback. The schedule which is the bounds for the speed governor operation consists of a start schedule as a function of speed, a maximum ratio and deceleration ratio. The speed governor with speed requested either by the engine throttle or by an analog computer potentiometer is compared with the simulated speed and the error times a constant is added to the base ratios to obtain the governoring ratios.

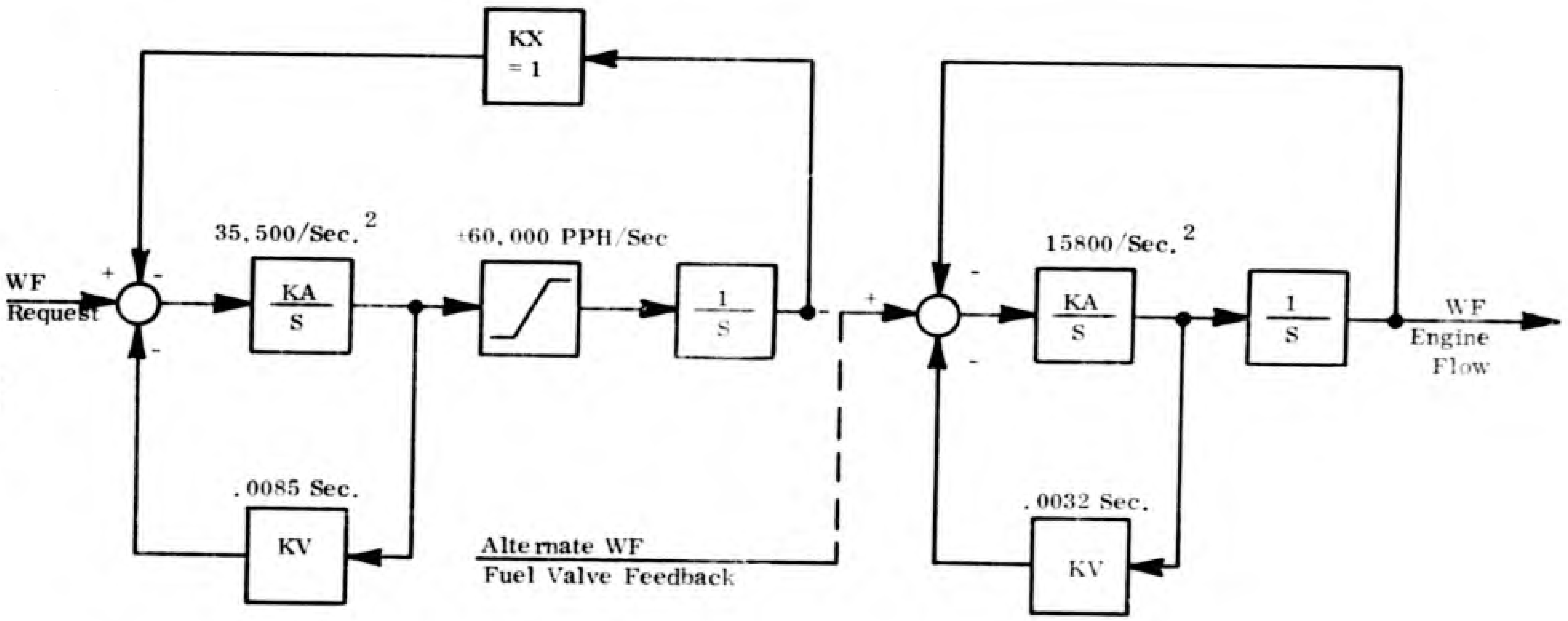

Freq. = 60 π Radians/Sec.
Damping = .80

Metering Valve

Freq. = 40 π Radians/Sec.
Damping = .20

ByPass Valve

FIGURE 51 -- FUEL CONTROL VALVING BLOCK DIAGRAM

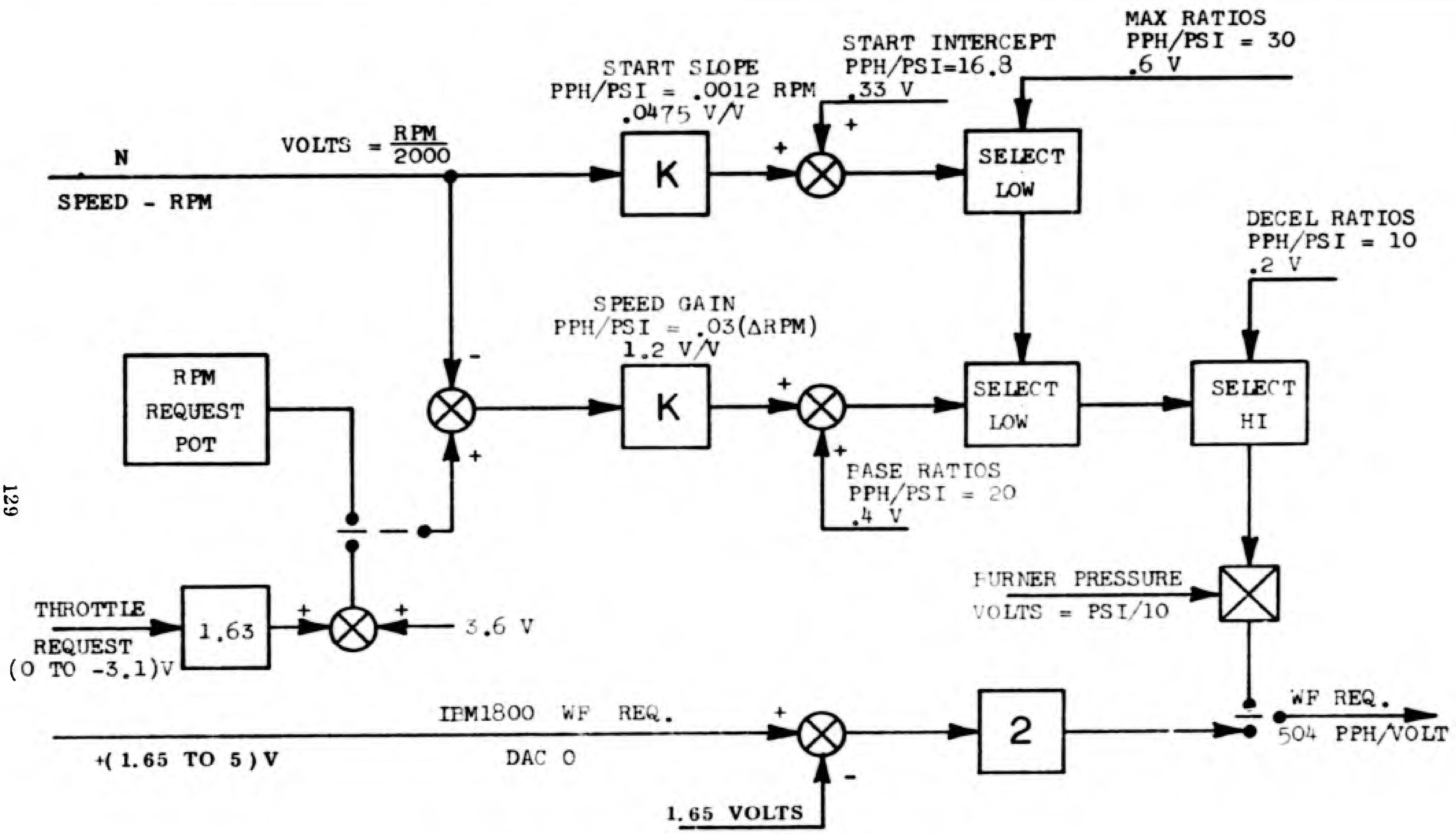

FIGURE 52 -- BLOCK DIAGRAM OF FUEL SCHEDULE AND GOVERNOR

When the 1800 computer is operating, the above schedule and governor are switched out and the 1800 request signal is input. The 1800 computer request is five times the value of the feedback. In addition, the fuel valve has a zero flow intercept at .33 volts. This value times five or 1.65 is subtracted from the DAC value and multiplied by two to obtain the fuel valve request. Thus,the DAC value for simulation and for engine running become equal. A second fuel valve with a gain of 1700 PPH per volt is available. When this valve is programmed in the digital computer the scaling for the DAC input to the simulation is changed.

Nozzle Control

The block diagram, Figure 53, for the nozzle control is based on the feedback voltage from the nozzle request actuator. This actuator is shown as a simple lag. The actuator position is input to the simulated nozzle drive. The drive is proportional to engine speed with a dead band of about ±3 per cent. At zero request, the area is a maximum 173 square inches and as the request increases the area decreases. The scaling is one volt equals 20 square inches. The request actuator feedback varies from zero to -4.5 volts which is equal to an area change of 66 square inches; Hence, the .74 scale factor shown between actuator and drive is to change the 4.5 volts to the 3.3 volts required into the mechanical drive.

Nozzle request is either from the engine speed or throttle speed request. Nozzle movement is from 10500 RPM to minimum area at 16500 RPM. Input to the actuator simulation is in speed simulation volts. The IBM 1800 computer also computes the nozzle command. This input is shown as the DAC 3 input.

SIMULATION PROGRAM

The engine is simulated by nominal values of engine variables as functions of engine speed. The nominal fuel flow is compared with the engine flow being delivered by the fuel control. This difference is used to compute engine variables. Engine variables computed are operated on to yield voltages compatible with the interface circuits. Control elements can be simulated or feedbacks from the engine components can be used.

Engine Simulation

Figure 54 illustrates the engine simulation program. Function generators are set per the table. For example at 12000 RPM the input is 6 volts and the functions are 1.1 volt equal 1100 ft. lbs. torque, 4.16 volts equal to 1360°R equal T_4, 1.61 volts equal 810 PPH fuel flow, etc. The outputs of the functions are operated on to yield changes in the engine operating point.

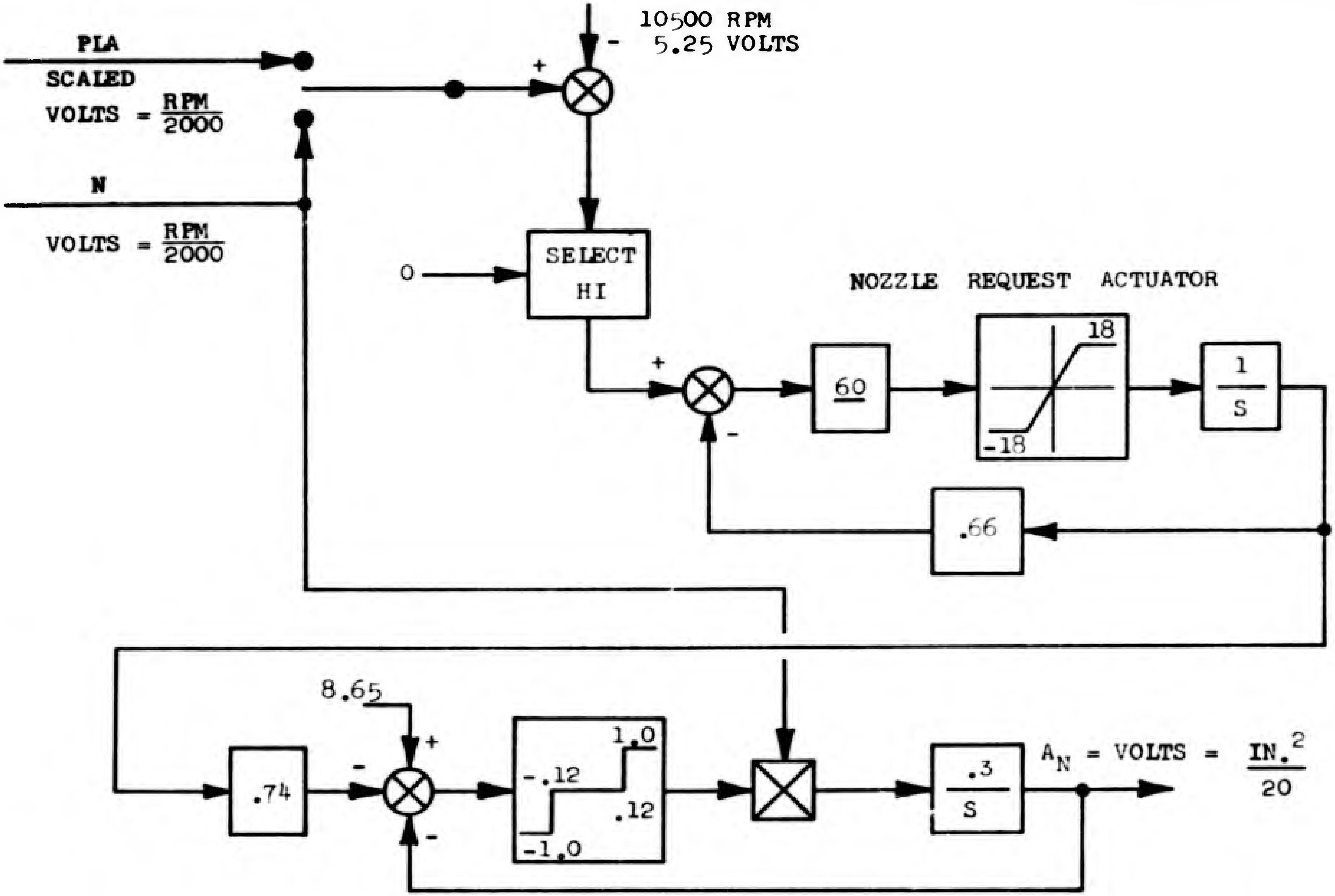

FIGURE 53 -- BLOCK DIAGRAM NOZZLE REQUEST AND ACTUATION

Fuel flow function is the required flow at the speed for maximum nozzle. This fuel flow is subtracted from the fuel input from the control to yield a fuel differential. The differential is multiplied by a temperature/fuel gain to yield a differential temperature. This differential is added to T_4 to obtain the turbine temperature including the effect of the fuel differential. The new T_4 is divided by nominal T_4 and the square root of this ratio is taken.

Engine variables are affected by this square root of the temperature ratio. Engine torque balance is effected by the square root minus unity. This causes the engine to accelerate or decelerate. The nozzle effect is added to the temperature effect on torque to obtain the combination effect. If the nozzle is maintained open the engine speed will change until the nominal fuel and fuel input are equal. When the nozzle is changed, the speed will change until the effect of the nozzle balances the effect of the temperature. The fuel will be different from nominal to yield the required torque balance.

The engine variables are effected as shown by the diagram. The engine variables obtained by this simulation are converted to voltage values compatible with the interface. Turbine discharge pressure P_5 and turbine inlet temperature T_4 as sensed by a fluidic sensor have been added to the program. Figure 55 illustrates the computations for P_5 and the dynamics of the T_4 sensor.

This simulation is completed for computer checkout by selecting a speed and setting this speed as the initial condition for the speed integrator, inputing a fuel equal to fuel required at the speed and setting the nozzle effect at zero. A disturbance in nozzle or fuel causes changes in the simulated values.

Variable Conversion and Sensor Simulation

The variables generated by the engine program are converted to values compatible with the interface by circuitry which includes simulated sensor dynamics. Figure 56 illustrates the conversion and sensor computer programs for pressures and temperatures.

The three temperatures T_3, T_4, and T_5 all are shown with one-half second lags. Scaling is to yield voltages equal to the outputs of the engine sensor circuits. The cold junction of the thermocouple circuits is set at 610°R equal to 150° F. The value of 655 yields ten computer counts per degree. In the digital computer both the 610 and 150 are added and readouts are available in degrees Rankine or degrees Fahrenheit.

Function Generator Input	0	1	2	3	4	5	6	7	8	9	10
ROTOR SPEED, VOLTS = RPM/2000											
ROTOR TORQUE, VOLTS = FT-LBS/1000											
1	0	.20	.40	.60	.68	.8	1.1	1.9	3.4	4.4	5.4
TURBINE TEMPERATURE, VOLTS = T4/327.7											
2	4.58	4.28	4.03	3.79	3.55	3.73	4.16	4.28	4.52	5.44	6.12
ΔT/ΔWF, VOLTS = 5°R/PPH											
3	8.5	8.0	7.5	7.0	6.5	6.0	4.4	3.15	2.25	1.8	1.4
FUEL FLOW, VOLTS = PPH/504											
4	0	-.199	-.298	-.397	-.688	-1.14	-1.61	-1.83	-2.33	-3.62	-4.88
CORRECTED AIR FLOW, VOLTS = (LBS/SEC)/2											
5	3.75	4.0	4.25	4.5	4.8	5.25	5.5	5.4	5.3	5.2	5.1
BURNER PRESSURE, VOLTS = PSI/10											
6	1.47	1.55	1.65	1.8	2.6	3.44	4.55	5.8	8.0	9.7	10.0
COMPRESSOR PRESSURE RATIO P3/P2, VOLTS = 2(P3/P2-1)											
Input	0	1	2	3	4	5	6	7	8	9	10
COMPRESSOR TEMPERATURE RISE, VOLTS = (T3-T2)/100											
7	0	.75	1.35	1.84	2.28	2.64	2.96	3.28	3.57	3.84	4.09

FUNCTION GENERATOR SETTING

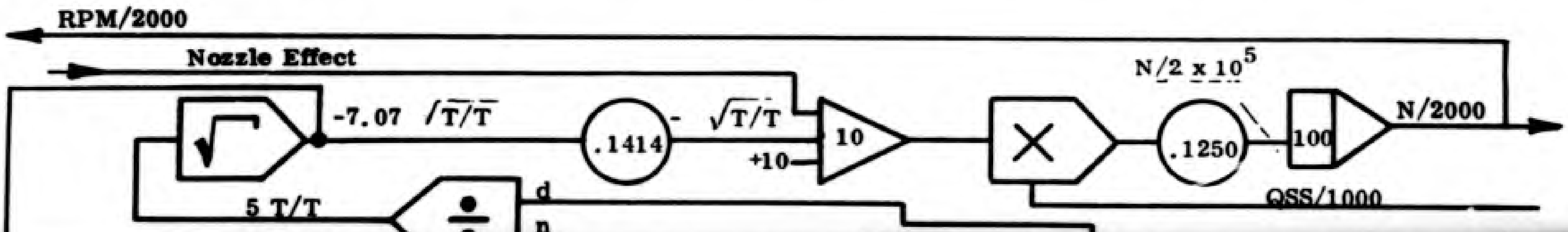

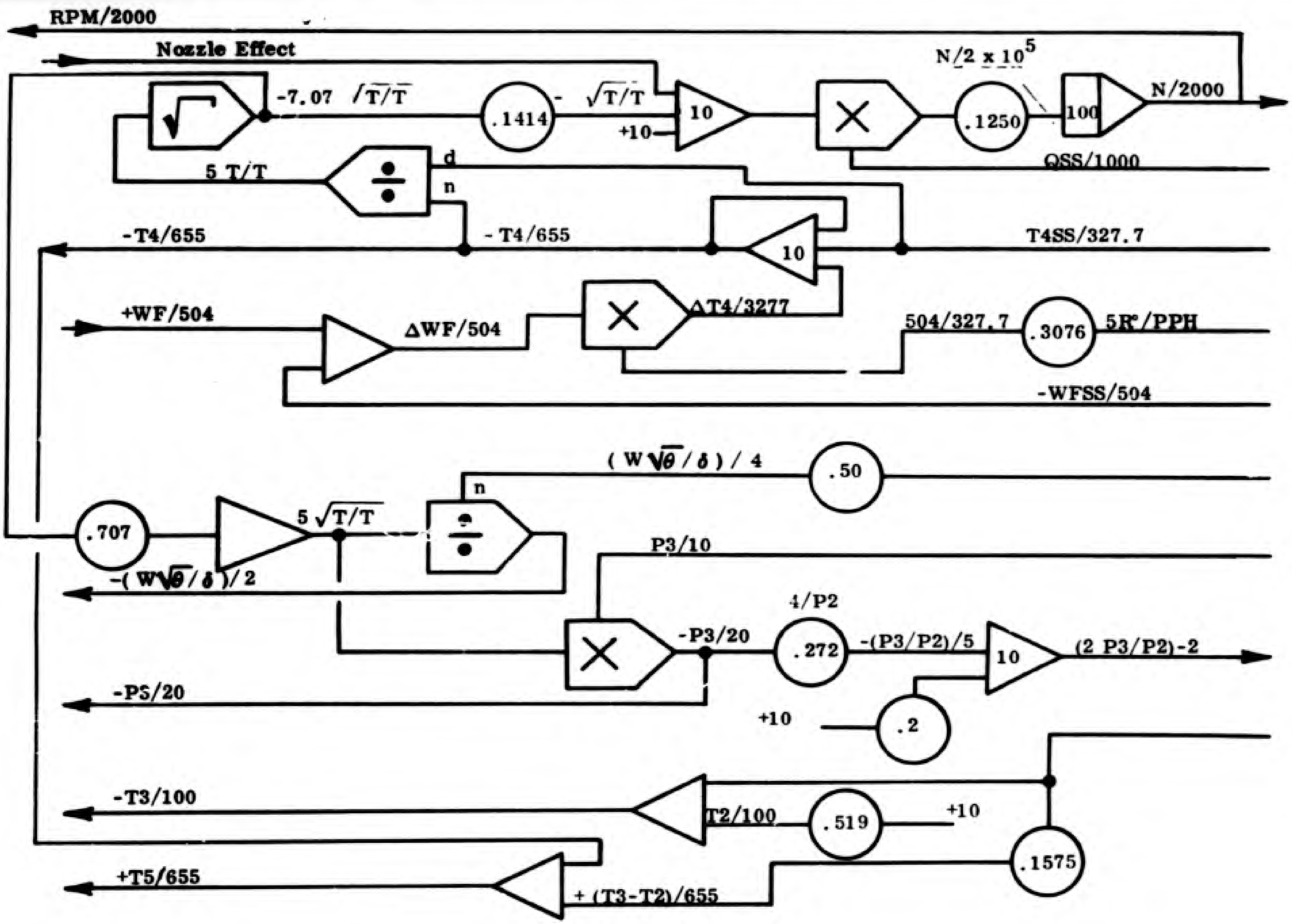

Figure 54 -- Engine Simulation

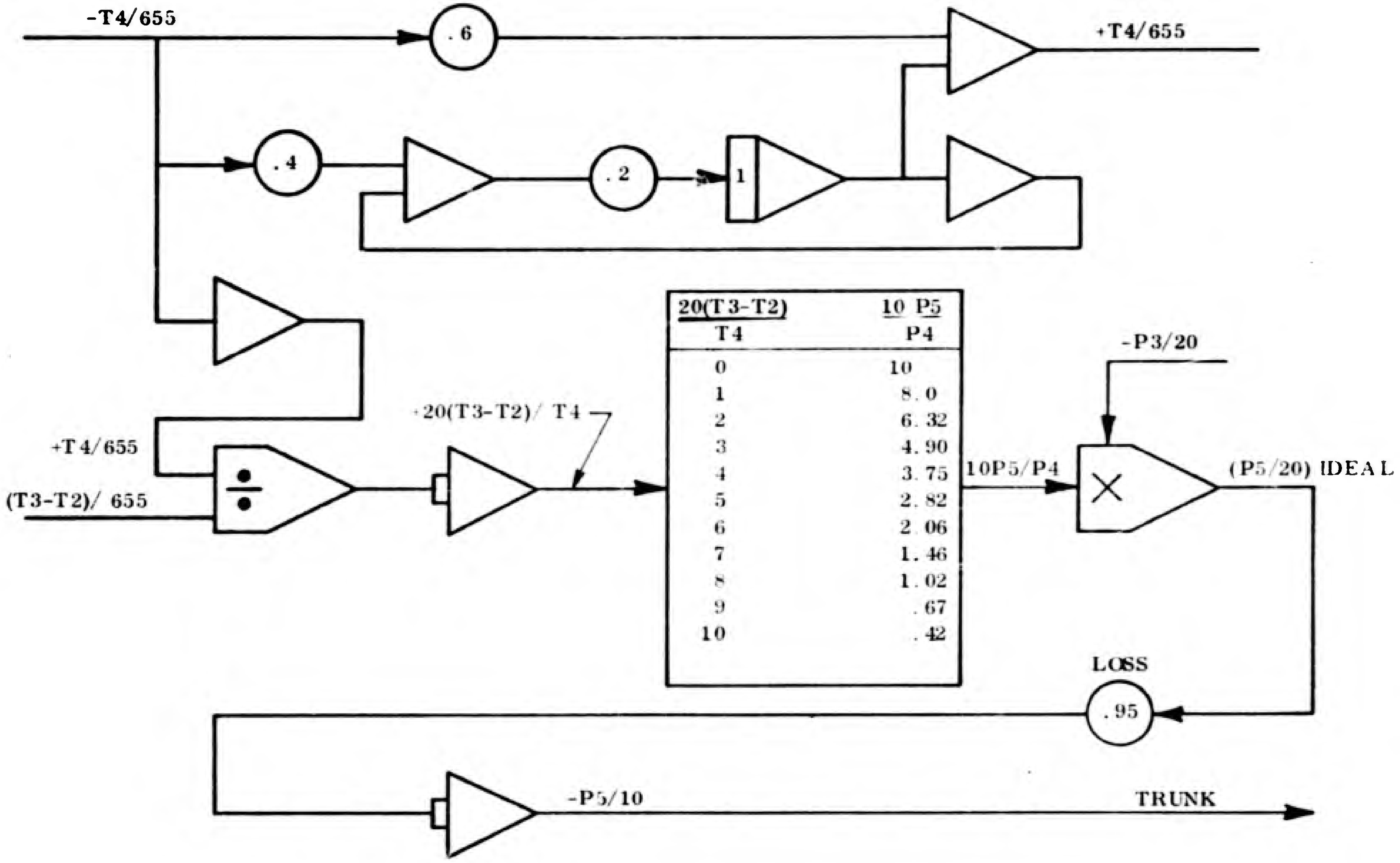

FIGURE 55 -- T4 LAGGED AND P5 COMPUTATION

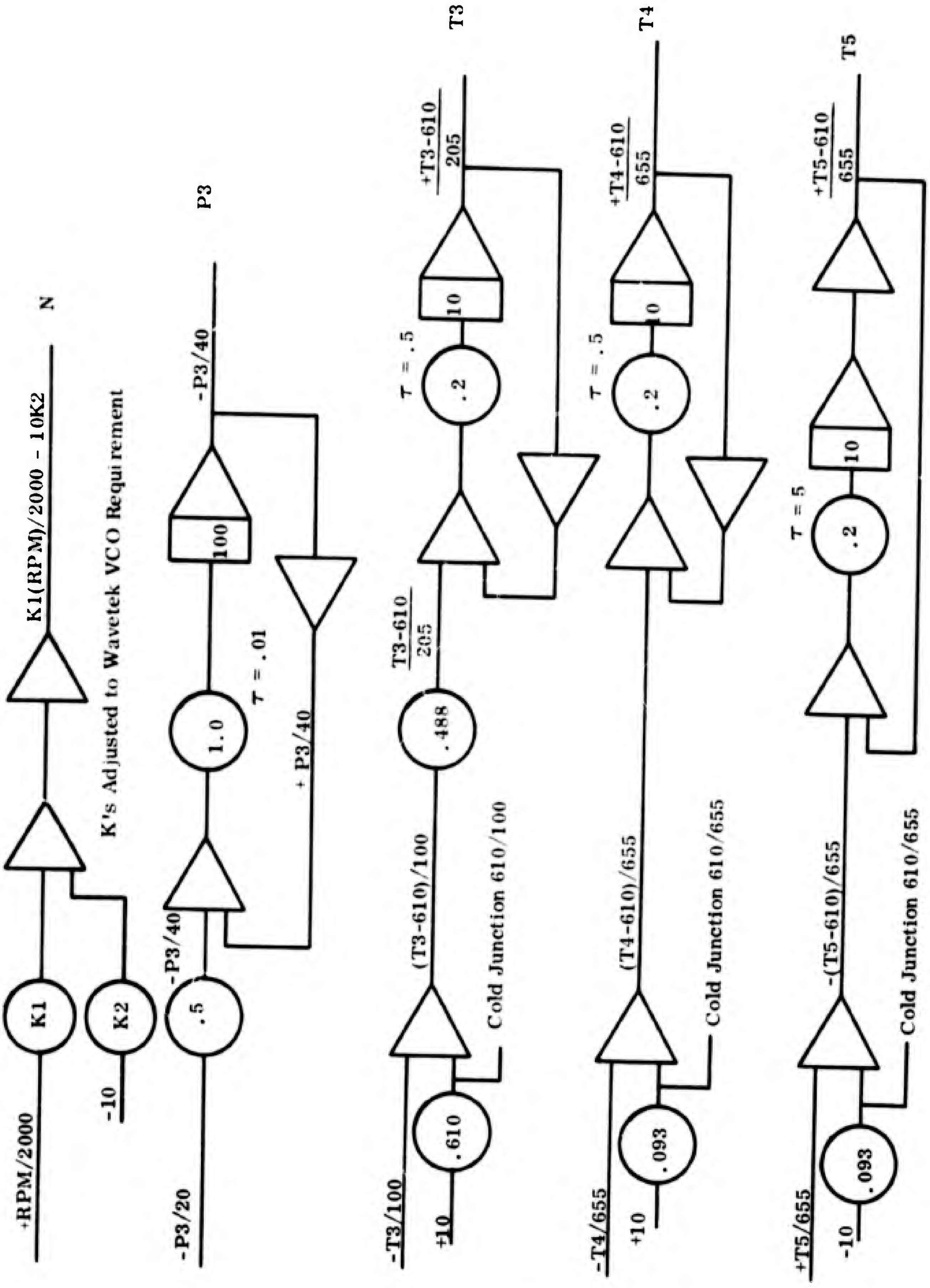

FIGURE 56 -- VARIABLE CONVERSION AND SCALING

Scaling of T_3 yield 32 digital counts per degree. A readout equal to ten counts per degree Fahrenheit is available.

The pressure P_3 is scaled at 40 PSI equal one volt which yields computer counts of 164 equal to one PSI. A readout is available at 100 counts equal to one PSI. The signal is lagged by 10 milliseconds.

Speed output from the simulation is adjusted for input to a voltage controlled oscillator. The oscillator yields 3844 Hz at 100% engine speed.

Figure 57 represents the simulation of the Bendix PRA-A2 pressure ratio sensor. This simulation is based on performance of the sensor as calibrated. The input airflow sense is adjusted to yield a sensor output equal to the output obtained from the engine. The sensed value of PS and PT depend on location of the sensor probes. This means the airflow sensed is not a true indication of compressor discharge corrected airflow, but is a parameter which varies similarly as the true airflow parameter varies.

Nozzle Control Simulation

The nozzle control is simulated by the request actuator and the nozzle drive mechanism. The nozzle simulation is used in an imperical computation to arrive at an effect on torque. Figure 58 illustrates the computer program. Inputs to the request actuator are obtained by moving the patch cord. At zero volts, the nozzle is open; at 6 volts the nozzle is closed; the DAC input may be used, and in the position shown the nozzle is on analog computer speed or throttle.

Fuel Control Simulation

Figure 59 presents the fuel schedule and governor program. This program is used for analog computer setup without the digital computer being used. The diagram is the program for Figure 52. Operation of the fuel control and governor is discussed in previous paragraphs.

Fuel Valving Simulation

Figure 60 represents the simulation program for the fuel system valving. Both the metering valve and bypass valve are second order functions. The valve does not enter into any stability control modes studied. Control loops, which may be unstable at a frequency near 17 CPS may be aggravated by the fuel valve characteristics.

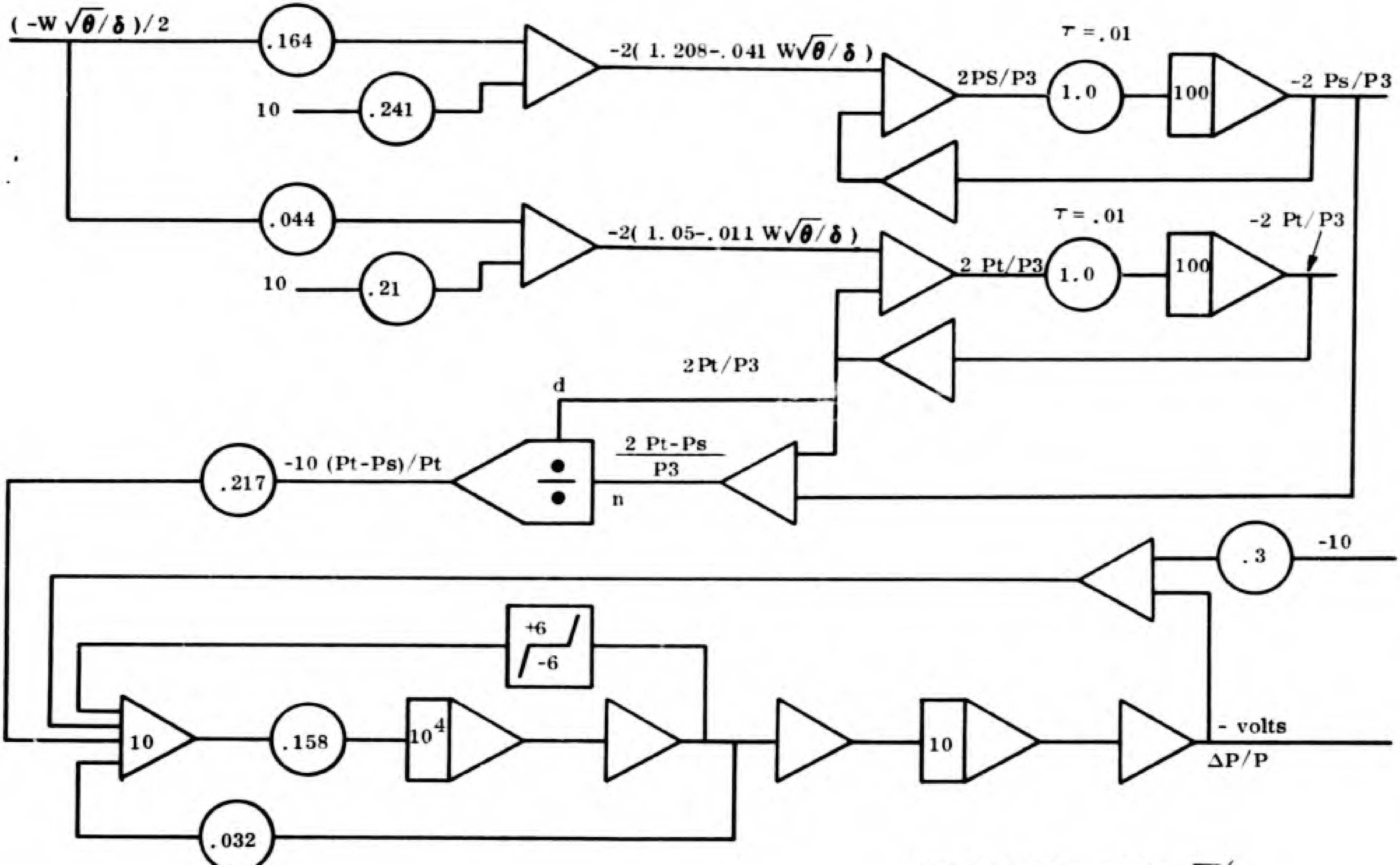

$PS/P3 = 1.208 - .041\ W\ \sqrt{\theta}/\delta$

$Pt/P3 = 1.05 - .011\ W\ \sqrt{\theta}/\delta$

FIGURE 57 -- ΔP/P SIMULATION

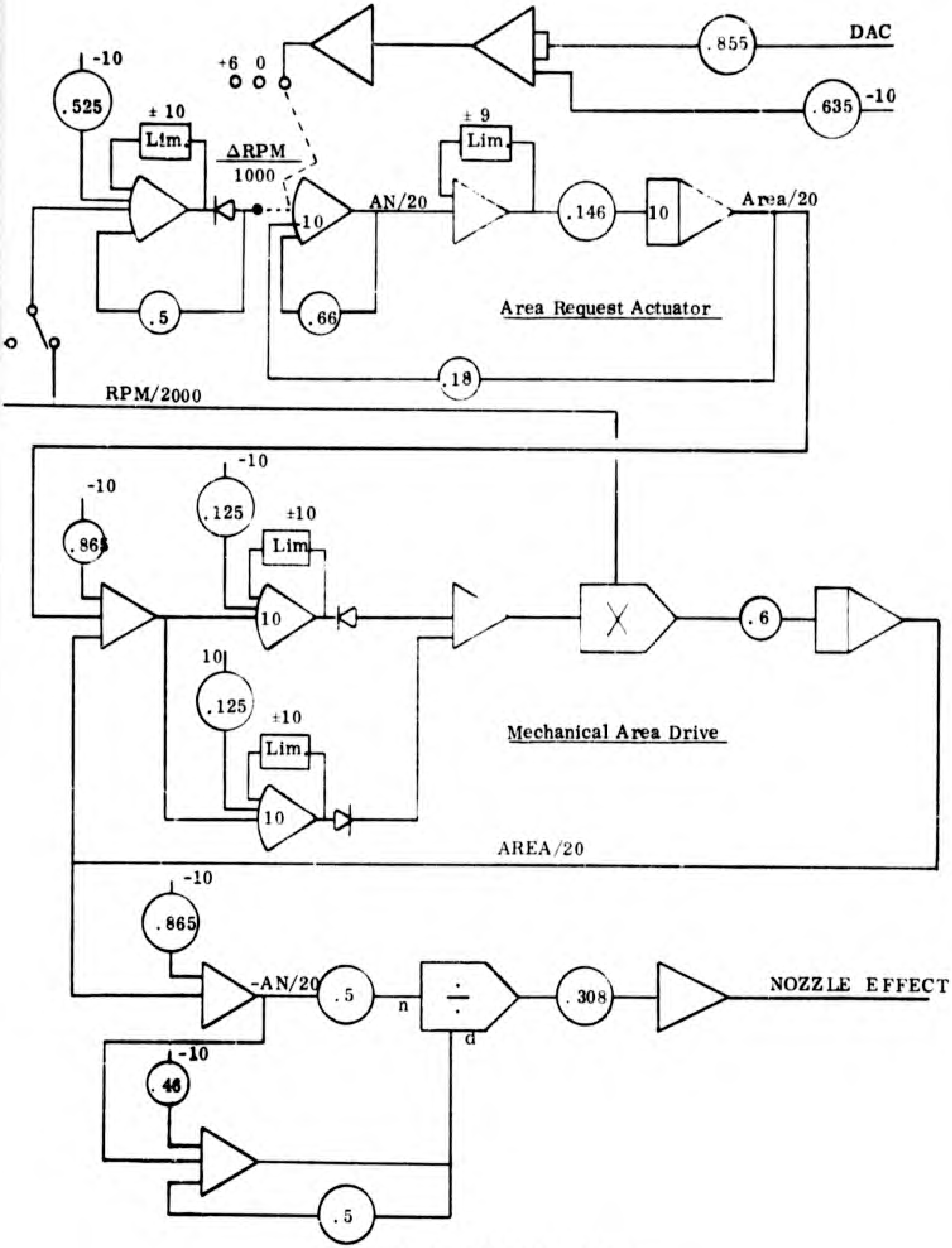

FIGURE 58 -- NOZZLE SIMULATION

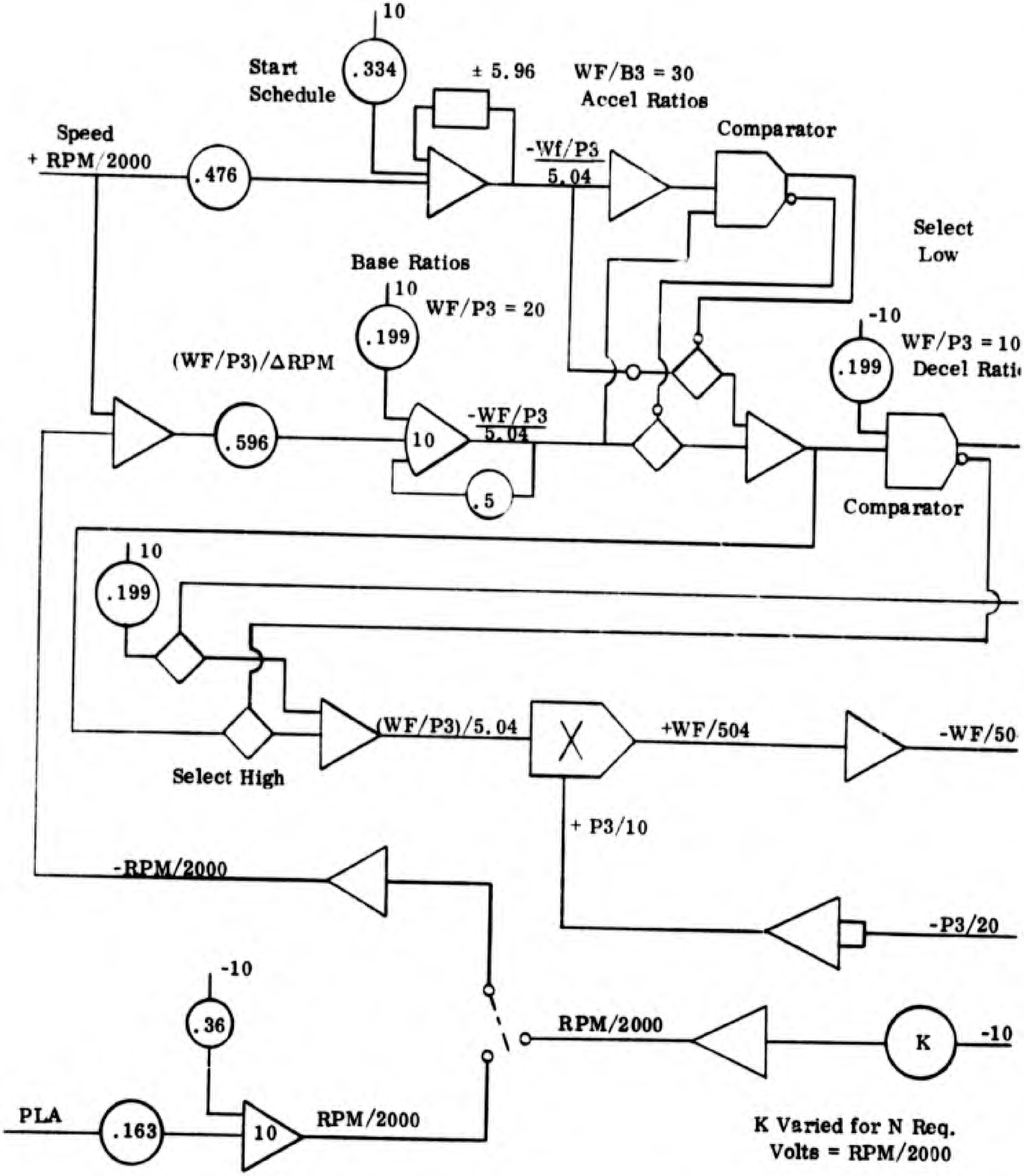

FIGURE 59 -- FUEL SCHEDULE AND GOVERNOR SIMULATION

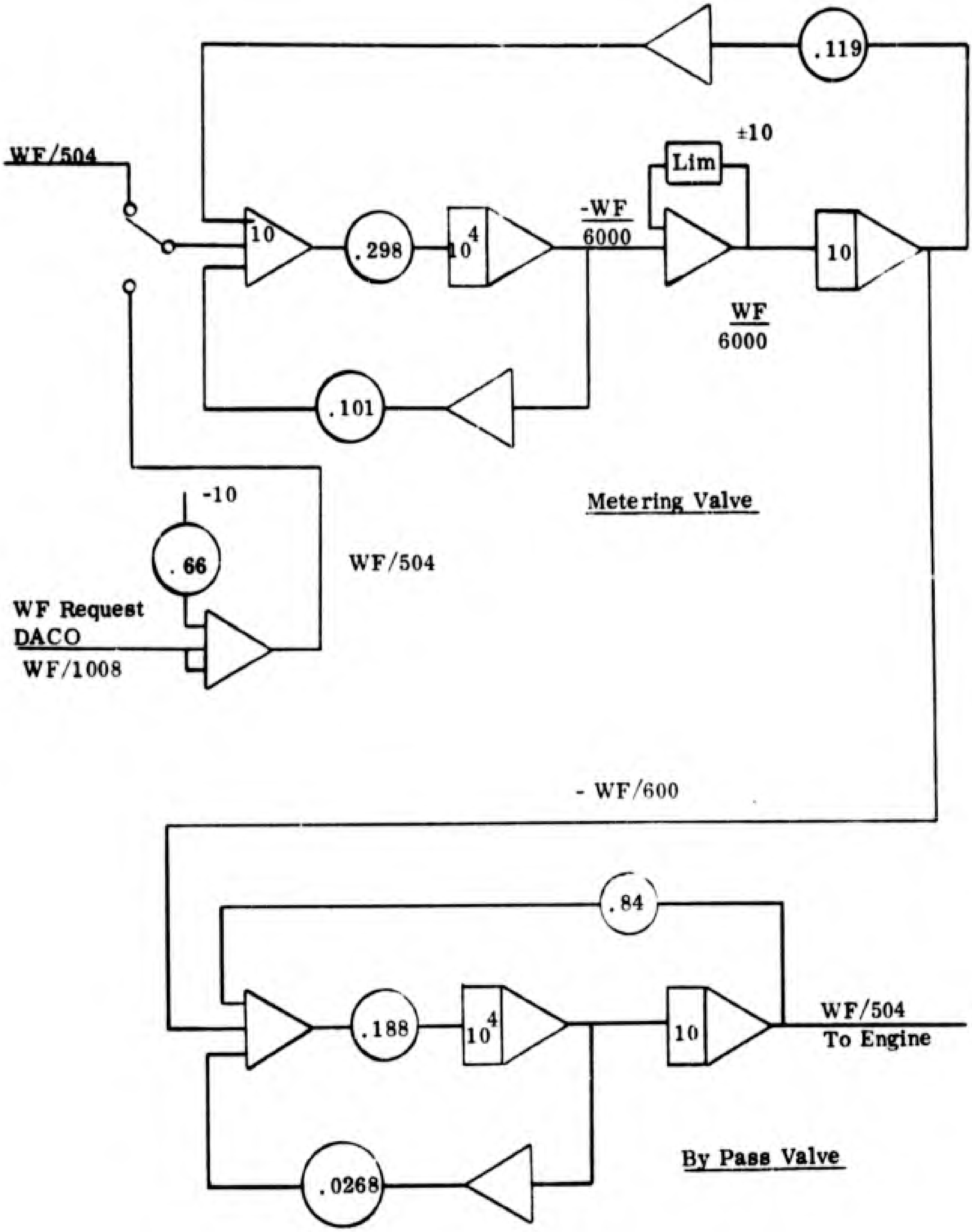

FIGURE 60 -- FUEL CONTROL VALVING SIMULATION

SECTION V

TESTS OF CONTROL SYSTEMS

Tests on both the analog computer J85 simulation and the J85-13 engine installed in the Air Force Aero Propulsion Laboratory were made to do the following:

- Demonstrate the flexibility of using the IBM 1800 digital computer to control the engine under test,
- Test various control modes and loops, and
- Show the performance characteristics of the engine and control system under test at altitude and sea level.

All control modes tested were programmed into the digital computer. All adjustments to the control were made during engine operation through the digital computer test console (EK18).

The following performance characteristics and control loops (both proportional and proportional plus integral) were demonstrated:

- Acceleration and deceleration on engine fuel-pressure ratio (WF/P3).
- Rate limited throttle request accelerations and decelerations.
- Speed governing.
- Rotor acceleration limiting.
- Burner pressure limiting.
- Turbine inlet temperature limiting,
- Turbine exit temperature limiting with engine exhaust nozzle.
- Airflow (pressure ratio) limiting.

ACCELERATION AND DECELERATION ON FUEL-PRESSURE RATIOS

The J85 engine specification fuel pressure ratio schedule shown in Figure 61 was used to limit fuel-pressure ratios during acceleration and deceleration transients. Transients were also made at fractions of the schedule. Test results in fuel flow and turbine temperature are shown in Figures 61 through 65 for both sea level and altitude conditions. The overall acceleration and deceleration time for the runs tested are summarized in the following table:

Sea Level Conditions

Speed Range = 49.5 to 88.5%	Acceleration				Deceleration			
Percent of Schedule	100	94	87.5	81.5	100	87.5	75	62.5
Time-Seconds	2.4	3.1	4.2	6.5	3.0	2.5	2.2	2.1

Altitude Conditions (23000 Ft)

Speed Range = 59.5 to 88.5%	Acceleration		Deceleration	
Percent of Schedule	100	87.5	100	75
Time-Seconds	2.3	3.0	5.0	3.8

Time trace, Figure 65, Run C, shows that during deceleration, nearly 50% of the time was spent coming into governing when fuel-pressure ratios were reduced to 87.5% and below the nominal deceleration schedule.

Turbine inlet temperature during sea level accelerations shown in Figure 63 appeared to decrease five degrees per percent reduction in acceleration ratios. The slow thermocouple response prevented observation of actual engine turbine inlet temperature during the transients. Frequency response tests from fuel flow to thermocouple output showed a first order lag characteristics with a time constant (τ) approximately equal to that given in Figure 64. Variable lead-lag dynamic compensation of 10:1 was then applied to the thermocouple output with the lead time constant matched to the thermocouple lag time constant. The results of the compensated turbine inlet temperature thermocouple output are shown in X-Y plot of Figure 64 for altitude and in Figure 65 time traces for both sea level and altitude conditions. The compensated temperature $T4^C$ now appears to respond more closely to changes in fuel pressure ratios.

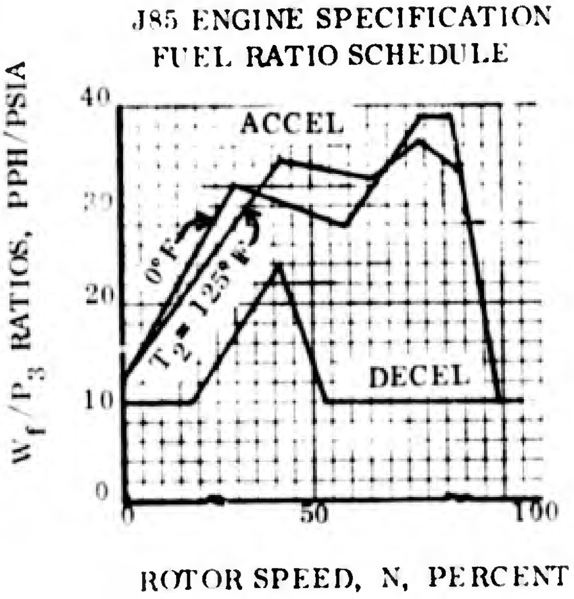

LINEAR EQUATIONS ARE USED TO GENERATE THE RATIO SCHEDULE VS ENGINE SPEED. ENGINE INLET TEMPERATURE (T_2) SETS THE REQUIRED SLOPES.

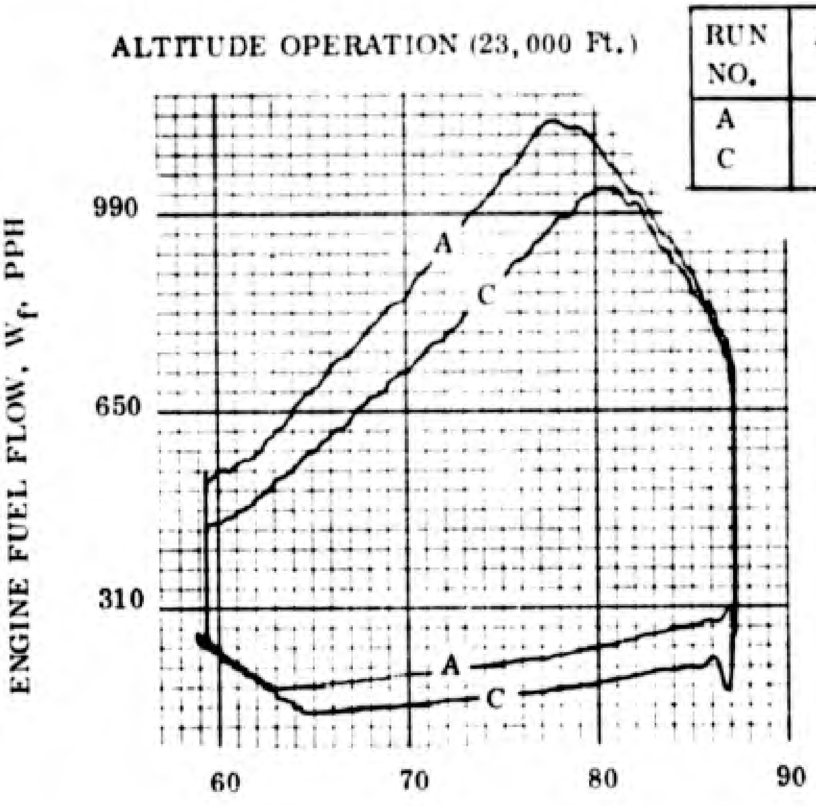

RUN NO.	ACC %	DEC %
A	100	100
C	87.5	75

FIGURE 61 -- ACCELERATION AND DECELERATION FUEL FLOW FOR VARIOUS FRACTIONS OF ENGINE SPECIFICATION RATIO LIMITS

RUN NO.	ACC %	DEC %
A	100	100
B	94	87.5
C	87.5	75
D	81.5	62.5
E	18 Sec. Acc. 16 Sec. Dec.	

SEA LEVEL OPERATION

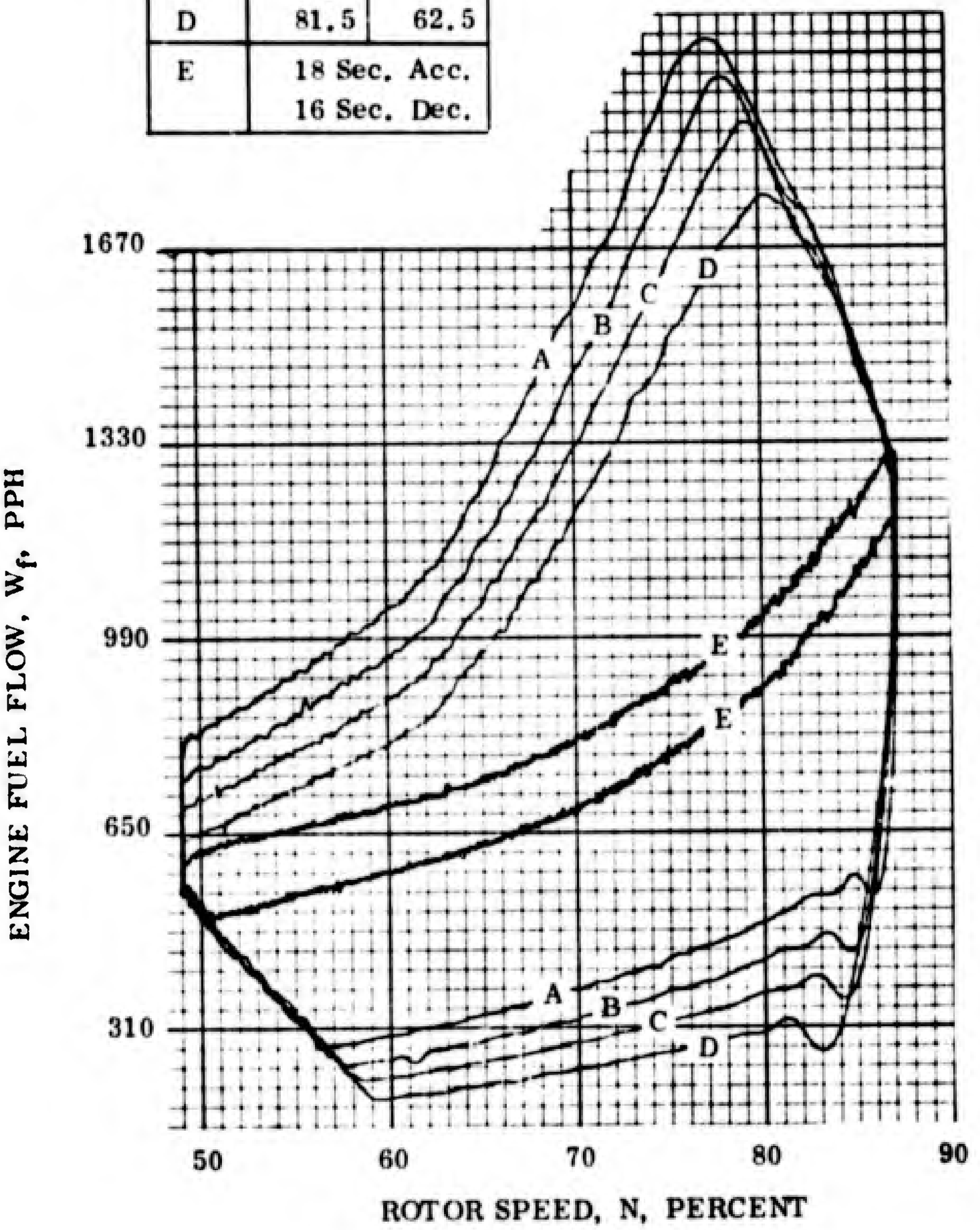

FIGURE 62 -- ACCELERATION AND DECELERATION FUEL FLOW FOR VARIOUS FRACTIONS OF ENGINE SPECIFICATION RATIO LIMITS

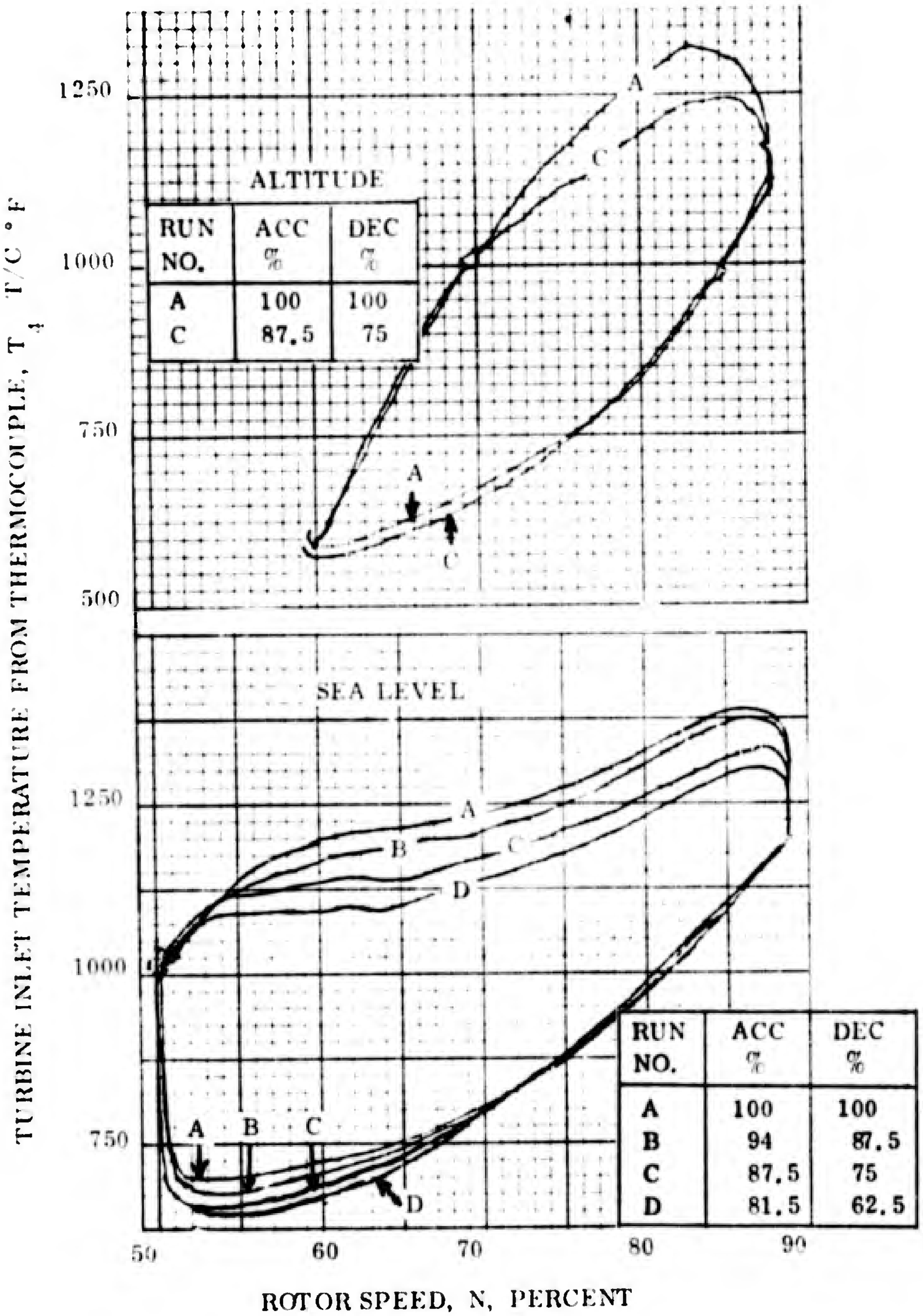

FIGURE 63 -- ACCELERATION AND DECELERATION TURBINE INLET TEMPERATURE FOR VARIOUS FRACTIONS OF ENGINE SPECIFICATION RATIO LIMITS

DYNAMIC COMPENSATION → $T_{4C} = T_{4\,T/C} \times \dfrac{(\tau S+1)}{\left(\dfrac{\tau}{10} S+1\right)} \sim °F$

THERMOCOUPLE LAG TIME CONSTANT → $\tau = .20 \dfrac{(P_3-P_2)o}{(P_3-P_2)} \sim \text{SEC}$

$(P_3-P_2)o$ = 57 PSI AT 95% N AND SEA LEVEL

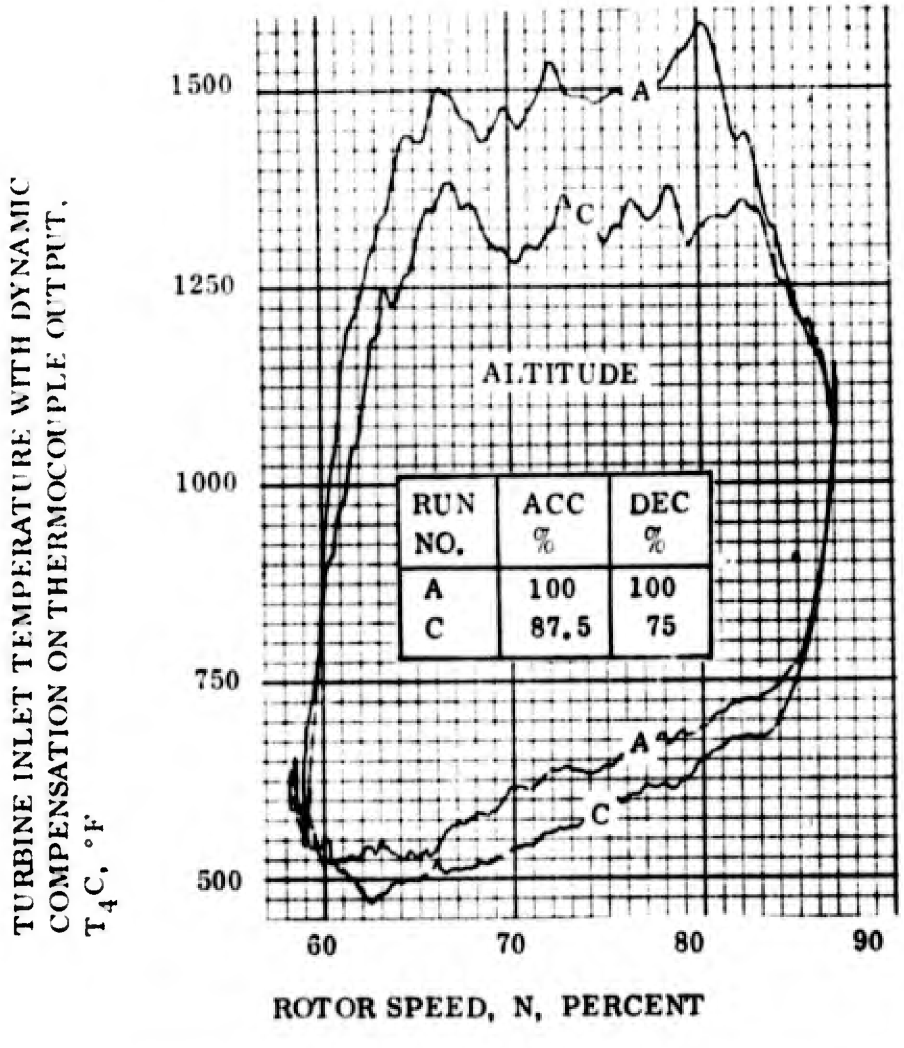

RUN NO.	ACC %	DEC %
A	100	100
C	87.5	75

FIGURE 64. ACCELERATION AND DECELERATION COMPENSATED TURBINE INLET TEMPERATURE FOR VARIOUS FRACTIONS OF ENGINE SPECIFICATION RATIOS

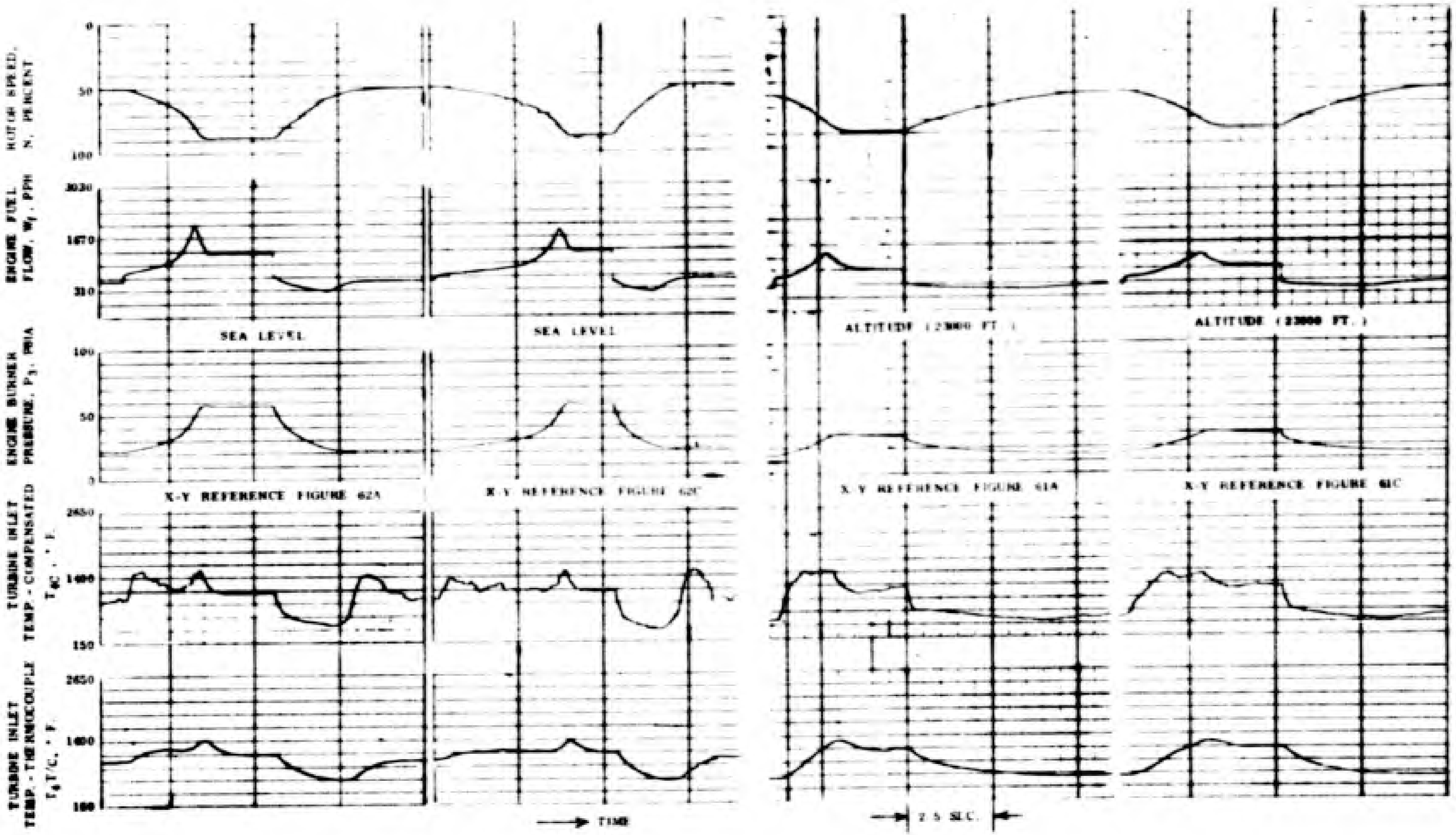

Figure 65 -- Time Trace of Engine Variables During Acceleration and Deceleration for Various Engine Specification Ratio Limits

RATE LIMITED THROTTLE REQUEST

Throttle requests of speed were rate limited as a function of (P3-P2) as shown by the block diagram and equations of Figure 66. Fuel flow versus speed results are given in Figures 66 and 67 for altitude and sea level conditions respectively. Figure 68 shows rotor accelerations and decelerations ($\dot{N}$) resulting from the rate limited throttle request transients. Acceleration levels of ±5 and ±10 percent per second for altitude and sea level conditions respectively resulted from the scheduled rate limit on the throttle. Accelerations made on engine specification ratios (Run A) showed maximum rates of nearly 20 and 40 percent per second respectively, for altitude and sea level. The acceleration was computed by averaging the speed changes that occurred in the last four computer iterations ($\Delta t = .015$ sec. per iteration). During the rapid transients at sea level acceleration fluctuations of two percent occurred at approximately four hertz.

SPEED GOVERNING

Proportional and proportional plus integral speed governing control modes were tested.

Proportional Speed Governing

The proportional speed governor was implemented per the block diagram in Figure 69. Speed error proportionally changes fuel-pressure ratios about a base fuel-pressure ratio level of 22 PPH/PSIA. Figures 69 and 70 show the effects of changing the proportional governor gain (KR). A governor gain of 2.4 fuel-pressure ratios per percent speed caused a slightly underdampened oscillator of 1.5 hertz near the maximum speed set point.

Proportional Plus Integral Speed Governing

The proportional plus integral governor tested was implemented per Block Diagram Figure 71. During steady state governing, the proportional plus integral governor changes fuel flow through gain K1WF. The proportional path that sums with the integral output has unity gain; therefore, the transfer function from speed error to fuel flow becomes the following:

$$WF = (N\ \text{Request} - N)\ (1 + S/KI) K1WF \bullet KI/S$$

$$\dot{N}_{LIMIT} = \dot{N}_0 + K\frac{(P_3-P_2)}{(P_3-P_2)_0} \qquad (P_3-P_2)_0 = \text{57 PSI AT 95\% N AND SEA LEVEL}$$

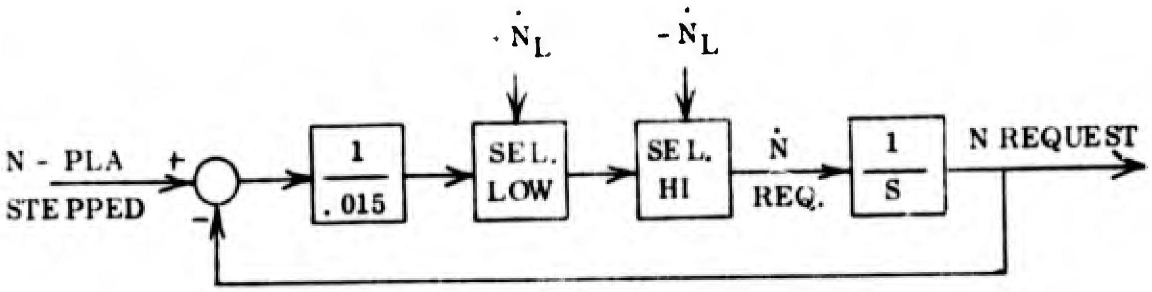

RUN NO.	$\dot{N}_0$ % / SEC	K % / SEC
A	Not Limited	
B	4.5	32
C	0	32
D	4.5	16
E	4.5	0
F	2.3	0

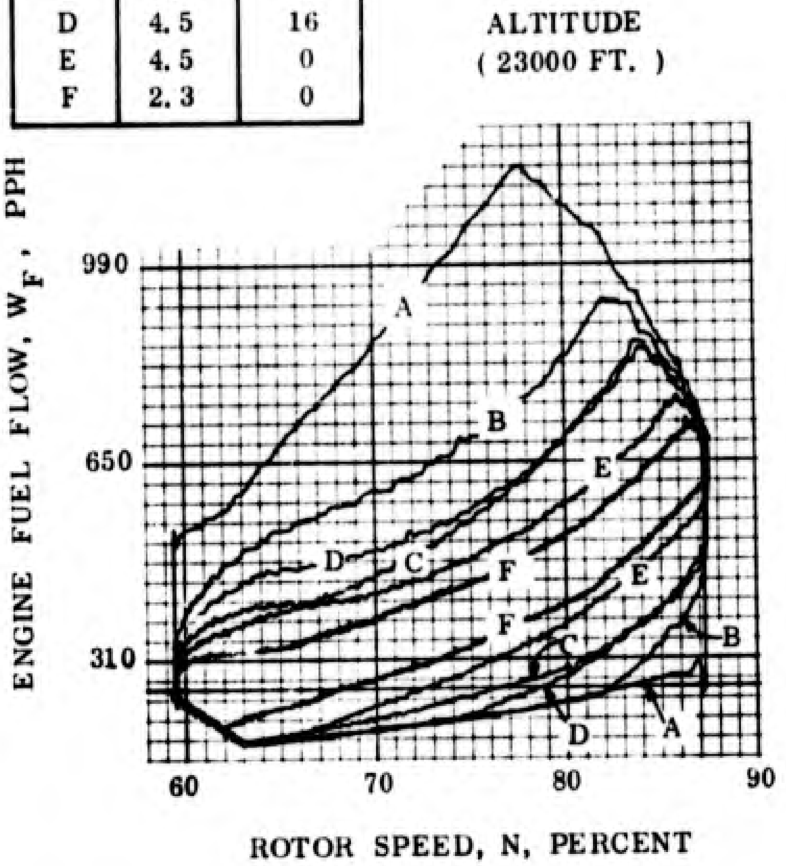

FIGURE 66. THROTTLE REQUEST RATE LIMITED AS A FUNCTION OF (P_3-P_2)

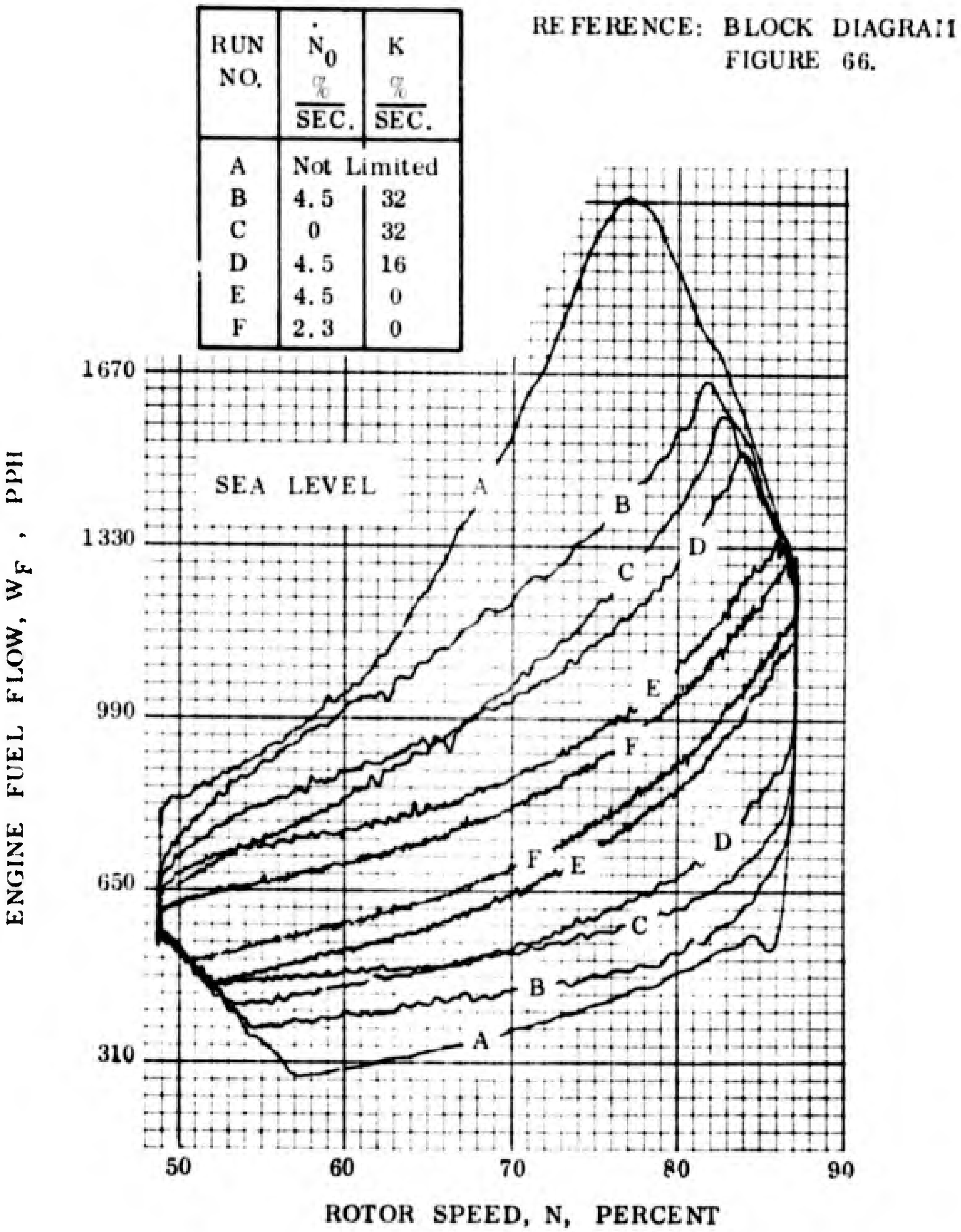

RUN NO.	$\dot{N}_0$ % / SEC.	K % / SEC.
A	Not Limited	
B	4.5	32
C	0	32
D	4.5	16
E	4.5	0
F	2.3	0

FIGURE 67. THROTTLE REQUEST RATE LIMITED FUNCTION OF (P_3-P_2)

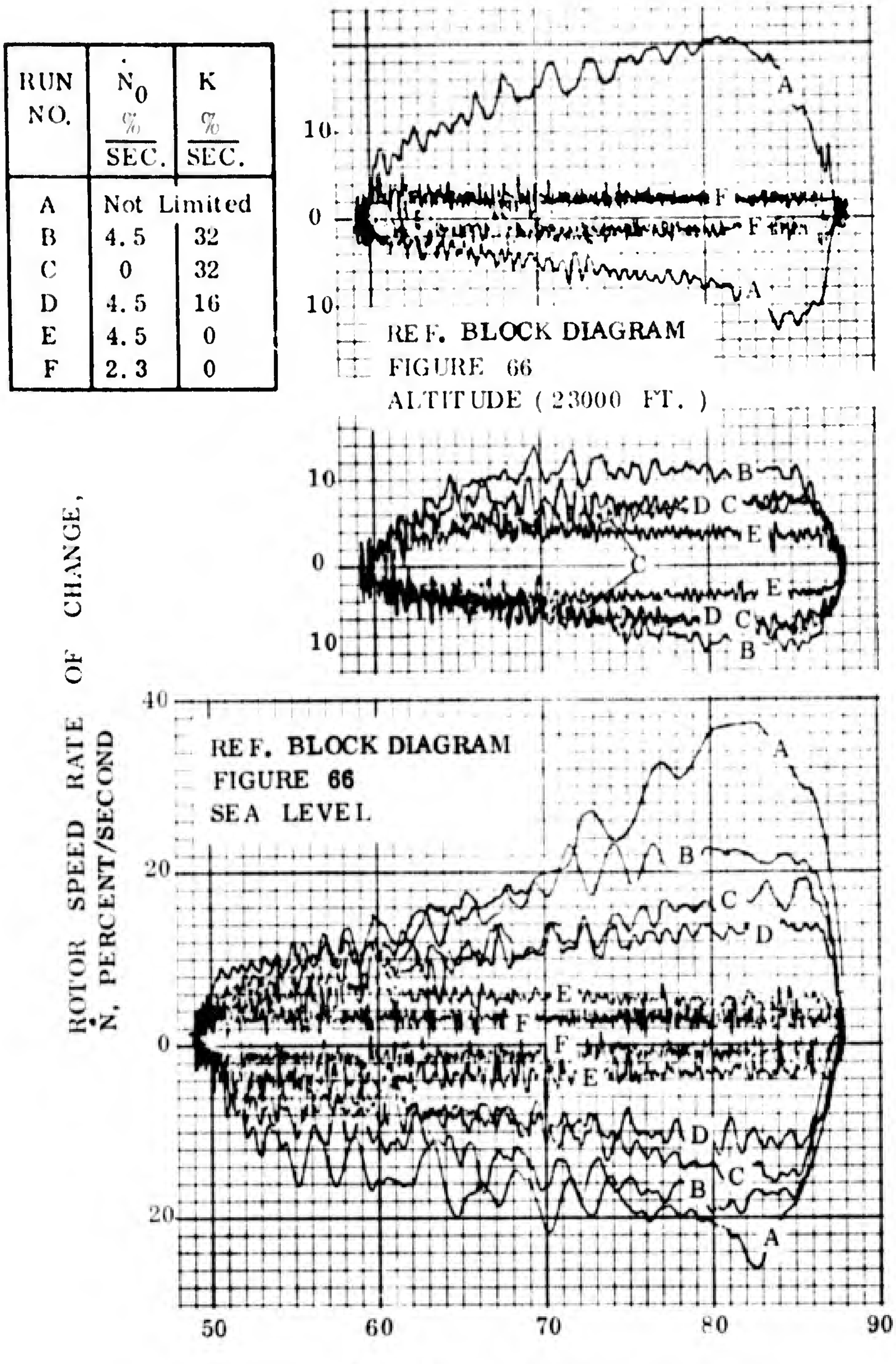

RUN NO.	$\dot{N}_0$ % / SEC.	K % / SEC.
A	Not Limited	
B	4.5	32
C	0	32
D	4.5	16
E	4.5	0
F	2.3	0

FIGURE 68. ACCELERATION AND DECELERATION SPEED RATES FOR VARIOUS RATE LIMITS ON THROTTLE REQUEST

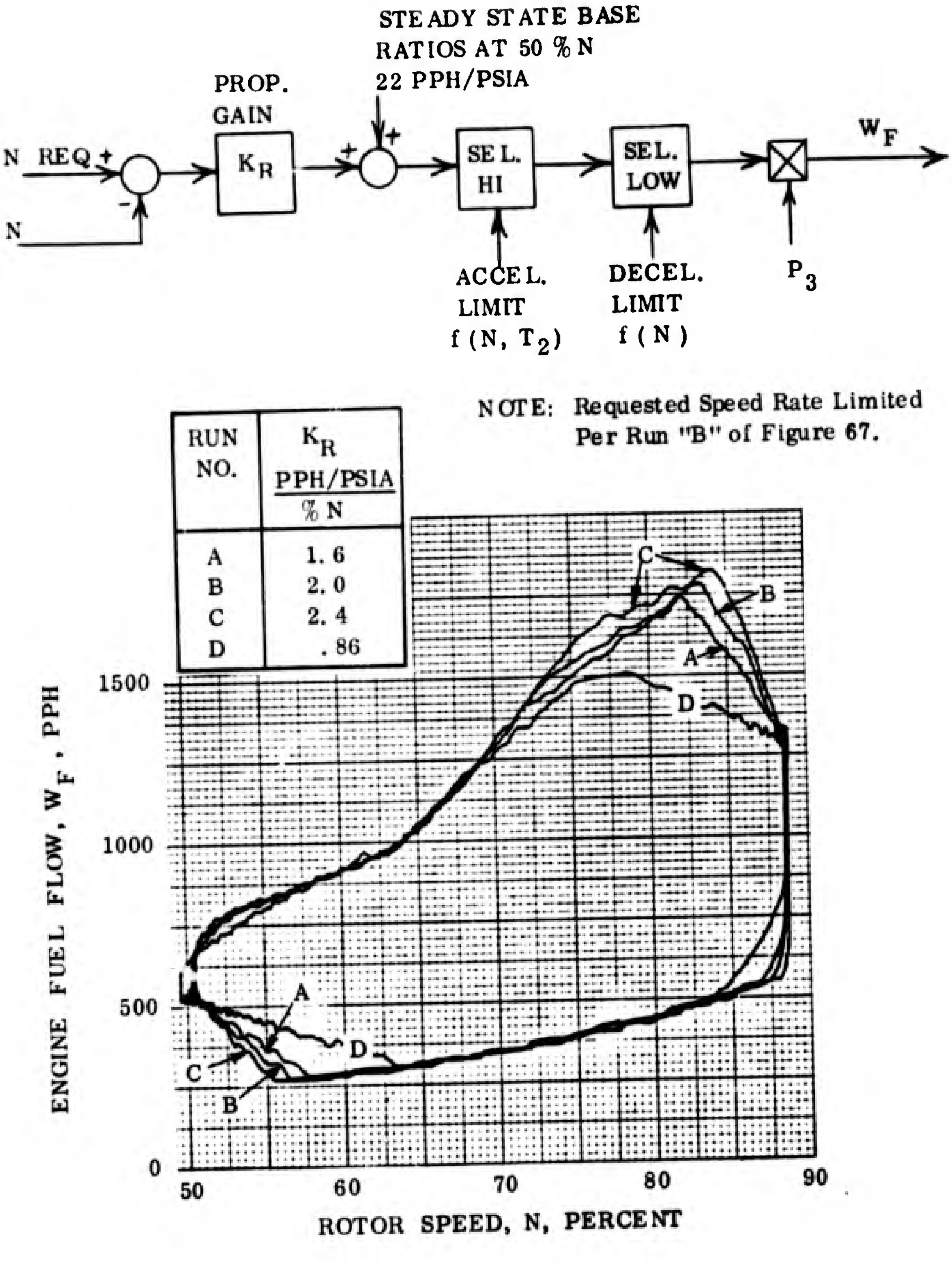

NOTE: Requested Speed Rate Limited Per Run "B" of Figure 67.

RUN NO.	K_R $\frac{\text{PPH/PSIA}}{\%\text{ N}}$
A	1.6
B	2.0
C	2.4
D	.86

FIGURE 69. THE EFFECTS OF VARYING THE PROPORTIONAL SPEED GOVERNOR GAIN

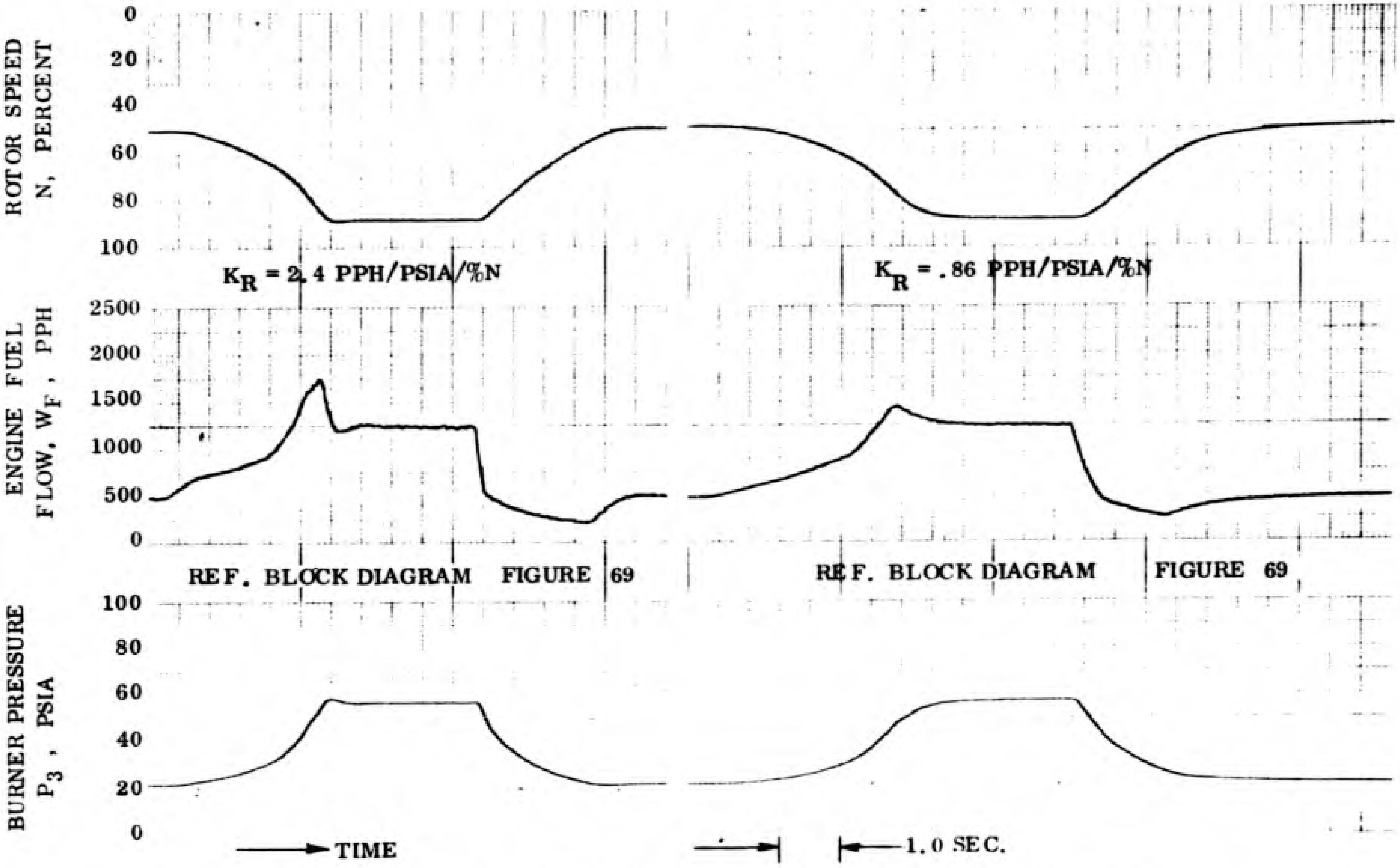

FIGURE 70. TIME TRACES ILLUSTRATING THE EFFECTS OF VARYING THE PROPORTIONAL GOVERNOR GAIN

Fuel flow requested by the governor is converted to fuel pressure ratios to permit limiting by the engine specification ratios and turbine inlet temperature during engine transients. A fuel flow feedback path to the speed governor bounds the governor output to 20 percent above (K4A = 1.2) and below (K4D = .8) the acceleration and deceleration limits respectively during the requested changes in speed from the throttle lever. Note when the speed governor is on the bounds, an increase in speed error causes the integrator output to decrease. Lagging the fuel flow feedback path in effect moves the bounds towards the acceleration and deceleration limits. The numbers given on the block diagram of Figure 71 are the nominal values and any deviations will be given on the figure under discussion.

The effects of varying the fuel flow gain (K1WF) which changes the loop gain are shown in Figures 72 and 73 for step changes to throttle speed request. A K1WF gain of 400 PPH per percent speed caused underdamped oscillations in the speed loop of 2.5 hertz at both maximum and idle speed set points. Figure 73 Run C shows that the high gain also causes excessive noise on metering valve position which was used to represent fuel flow. The noise was partly attributed to the computer's resolution of the speed signal which is .033 percent of point. For example, at 100 percent when engine speed changed .033 percent, the computer would sense the speed change in one iteration and request a step change in fuel flow of 13.2 PPH (.033 x 400).

The effects of changing the integral gain adjustment (G1I) are shown in Figure 74 and Figure 75. Note that the integral gain (KI) varies proportionally with (P3-P2). The purpose of the pressure changes on the integral gain was to cause the resultant lead time constant from the proportional plus integral governor to match the engine lag dynamics from fuel flow to speed. With step changes in throttle speed request, lowering the integral gain causes the governor to act with increased anticipation as speed approaches the requested point. The anticipation was reduced when the integral gain was increased. The variations in anticipation associated with the integral gain are due to the changes in the speed error level required to bring the speed governor off the bounds through the select functions in front of the integrator.

During the test, the maximum and minimum speed set points were changed with the throttle lever to run the intermediate speed points. When the throttle positions were returned to the maximum and minimum speed settings, no attempts were made to precisely match the previous set points.. This setting change resulted in small variations in the maximum and minimum speeds for the various gain settings.

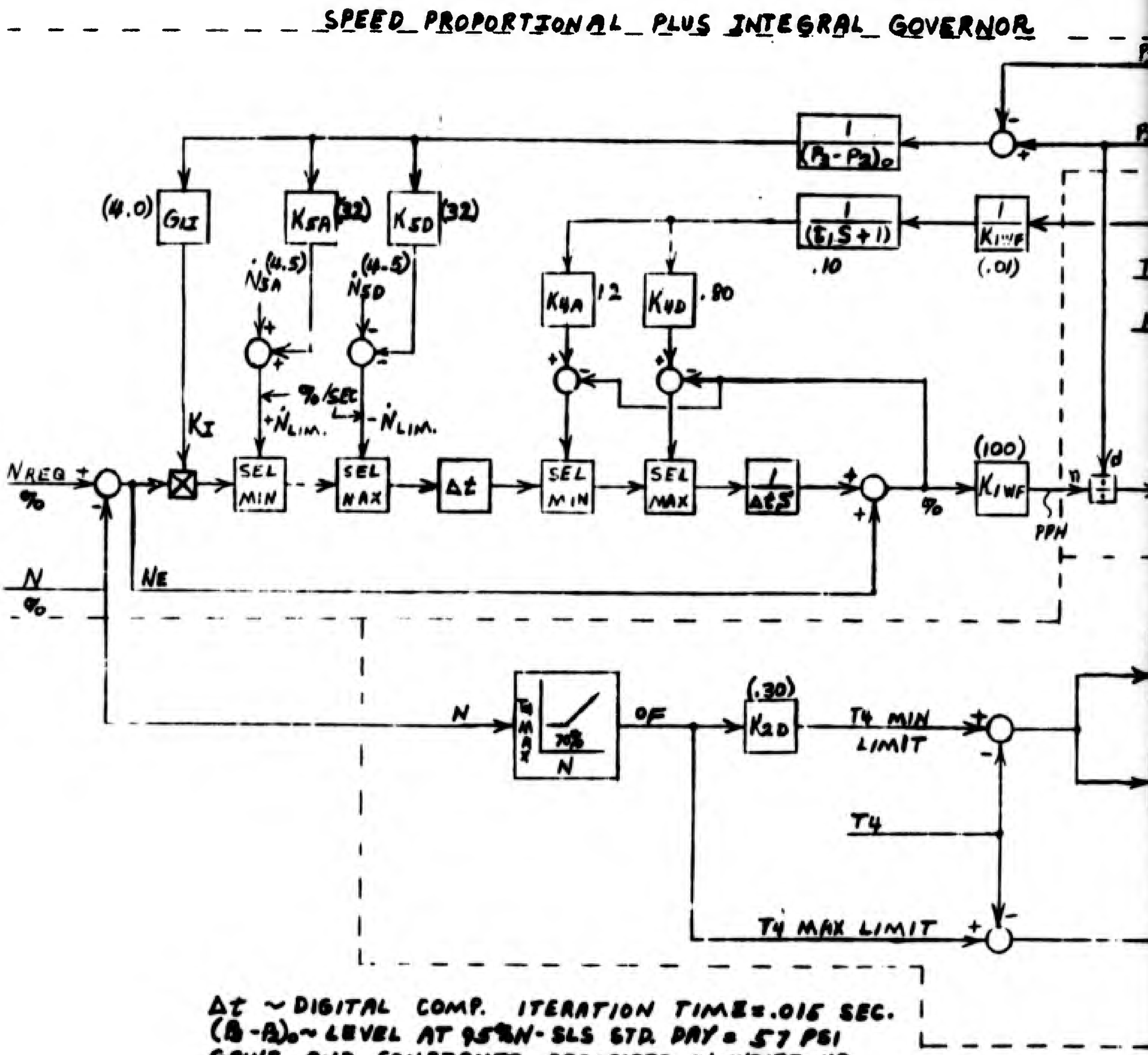

Δt ~ DIGITAL COMP. ITERATION TIME=.015 SEC.
(P3-P2)o ~ LEVEL AT 95%N-SLS STD. DAY = 57 PSI
GAINS AND CONSTANTS DESCRIBED IN WRITE-UP

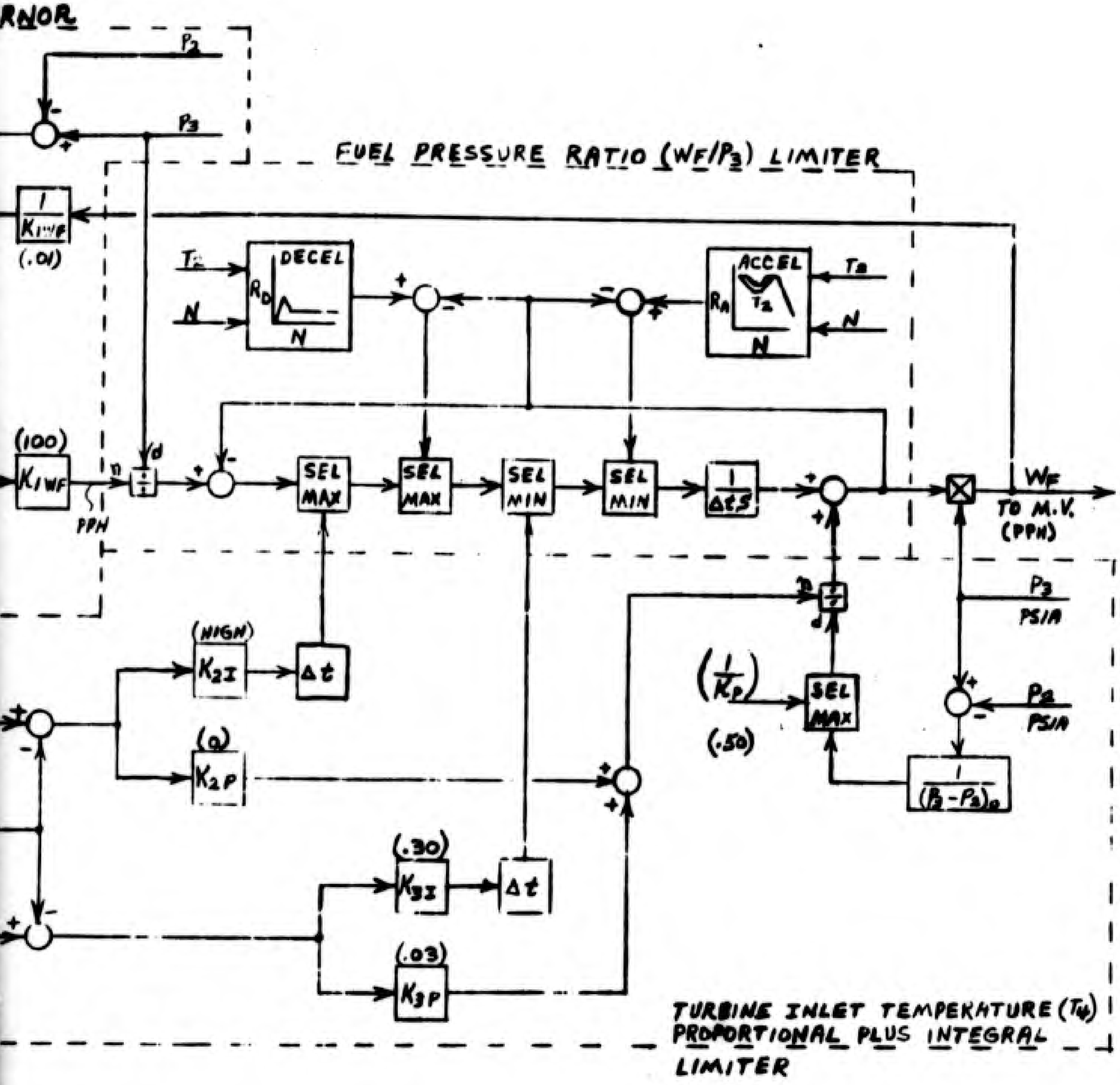

Figure 71 -- Proportional Plus Integral Speed and Temperature Control

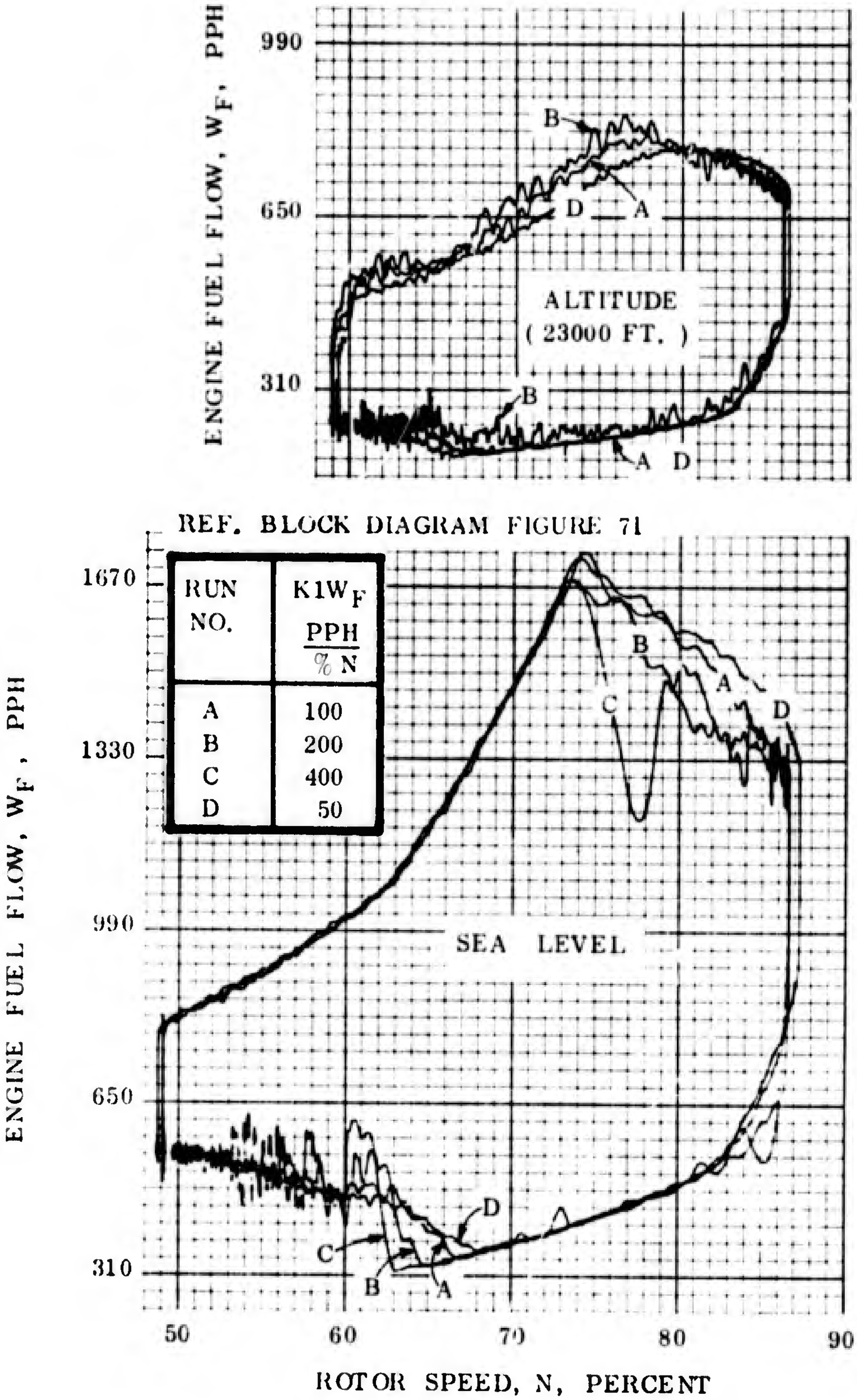

FIGURE 72. GAIN FROM SPEED (P+I) GOVERNOR TO FUEL FLOW VARIED FOR STEP CHANGES IN THROTTLE REQUEST

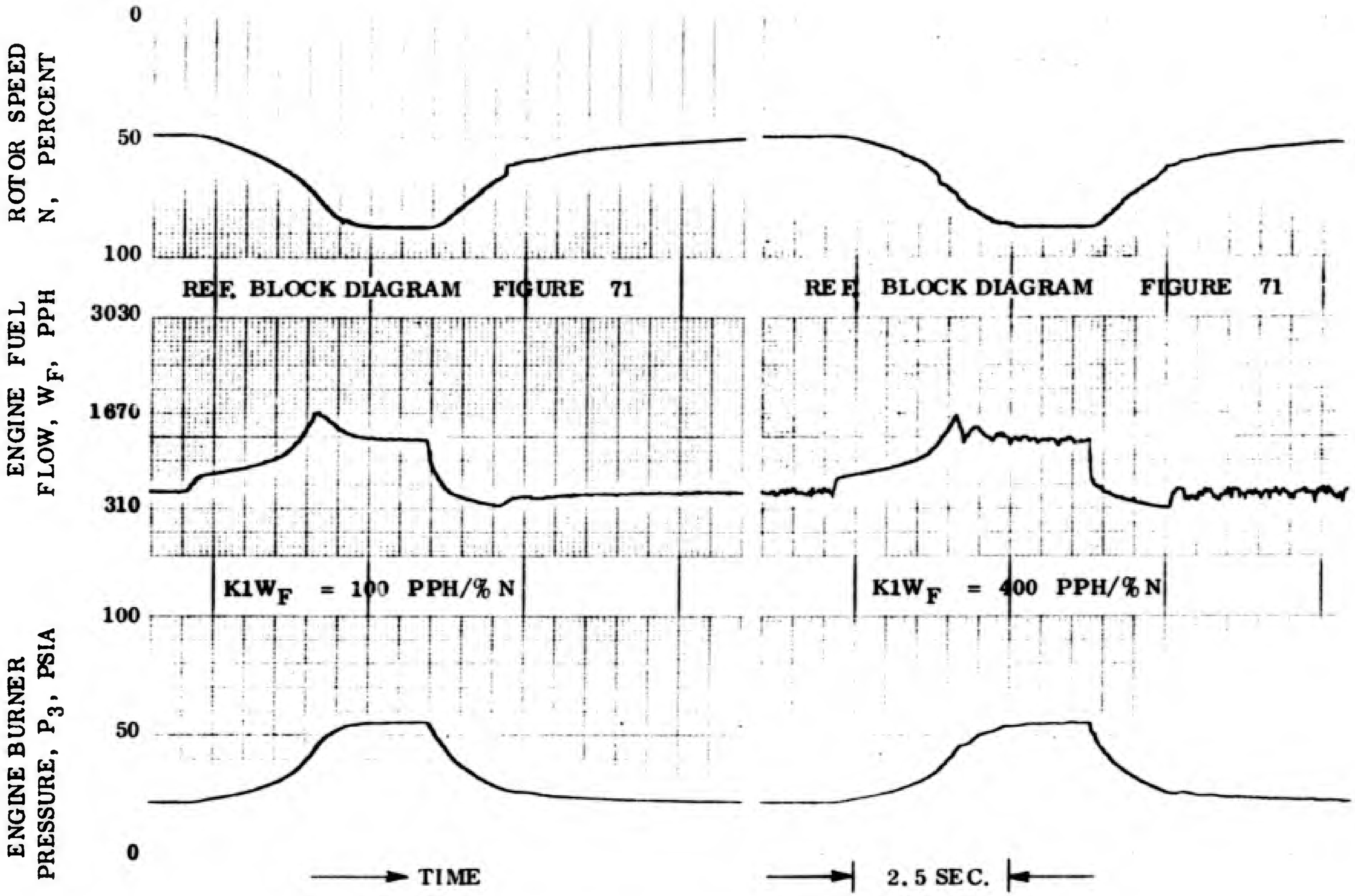

FIGURE 73. GAIN FROM SPEED (P + I) GOVERNOR TO FUEL FLOW VARIED FOR STEP CHANGES IN THROTTLE REQUEST.

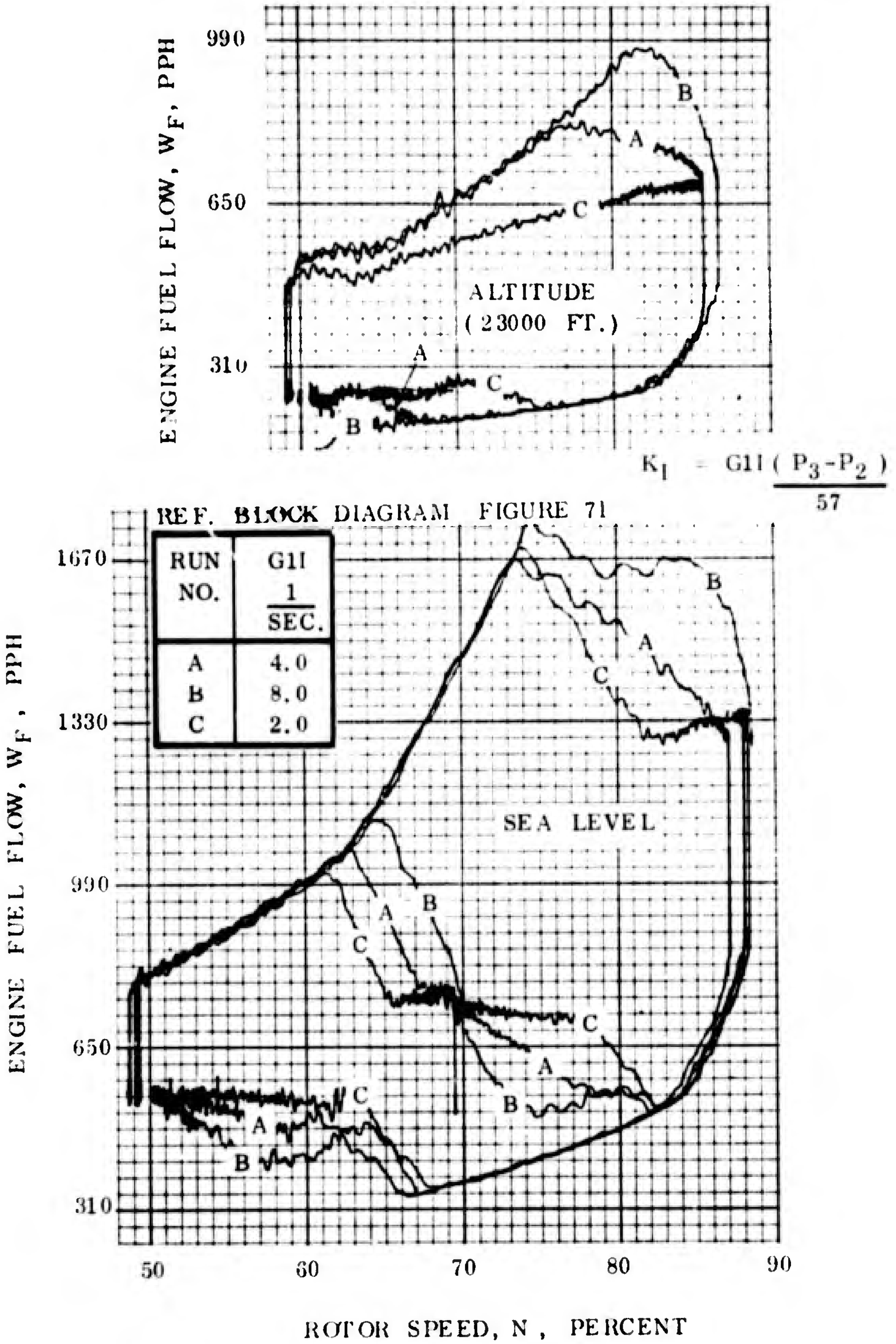

FIGURE 74. EFFECTS OF VARYING THE INTEGRAL GOVERNOR GAIN FOR STEP CHANGES IN THROTTLE REQUEST

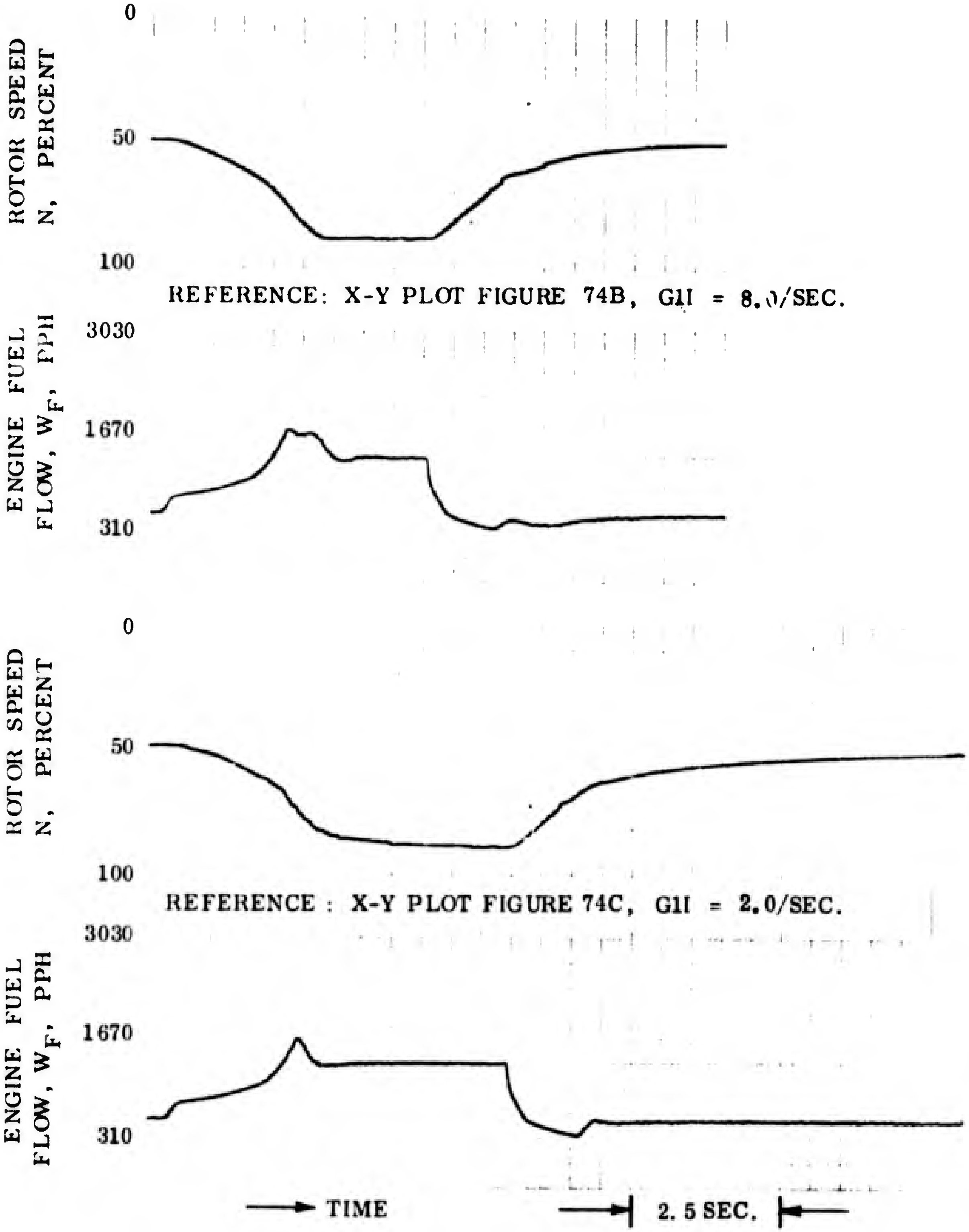

FIGURE 75. EFFECTS OF VARYING THE INTEGRAL GOVERNOR GAIN FOR STEP CHANGES IN THROTTLE REQUEST

Figures 76 and 77 show the effects of varying the fuel flow feedback response to the governor bounds. Increasing the lag time constant to slow the response time causes the governor bounds to close in on the acceleration or deceleration limits. The results are that the anticipation of the speed governor increases and eventually the bounds prevent the acceleration and deceleration limits from being reached throughout the entire transient as in Run F.

Rate limited throttle request to the proportional plus integral governor caused the anticipation and acceleration limiter features to become ineffective as shown in Figure 78. Run A shows a rate limited throttle request using a proportional speed governor. Runs B and C are results of stepped throttle requests to the proportional plus integral governor which show the effectiveness of the anticipation feature and acceleration limiter. However, Run D shows that when rate limited throttle request of speed was applied to the gain settings of Run C, engine speed and fuel flow appeared to follow the throttle lever request instead of being acceleration limited by the (P+I) governor. Also,no anticipation occurred which caused speed to overshoot approximately one percent of the maximum setting. Given more time, the integrator would have brought speed back to the 88 percent setpoint. In Figure 79, efforts were made to cause anticipation and eliminate speed overshoots by increasing the fuel flow feedback lag time constant. Anticipation was again attained for rate limited throttle request, however, not before the governor bounds began cutting into and reducing the acceleration and deceleration fuel flow limits. Both the acceleration limiter and anticipation characteristics require the speed error to be large enough to drive the integrator velocity on the acceleration limits and be indicative of actual engine speed rate of change. When throttle requests are rate limited instead of stepped, the resultant speed error causes the governor to supply sufficient fuel flow to the engine to maintain the speed acceleration requested. It is the fuel flow changes from the proportional path during the transient that reduces the velocity requirements of the integrator; thus, the velocity or acceleration limits are not reached.

BURNER PRESSURE LIMITING

The burner pressure limiter was tested on the analog computer engine simulation and consists of a proportional control loop shown in Block Diagram Figure 80. The results are shown in Figure 81 for various levels of burner pressure limitings. The burner pressure did not exceed any of the limits set by the control. Due to the droop of the proportional controller burner pressure began effecting fuel flow approximately 12 PSI below the limiting value. For example with a proportional gain of 1.0 PPH/PSIA/PSI, 12 PSI change in burner pressure is required to lower fuel-pressure ratios from the acceleration schedule to steady state which is approximately a 12 PPH/PSIA reduction.

$\dot{N}$ LIMITER EFFECTIVELY REMOVED ($\dot{N}_5$ = 66 %/SEC.)

NOTE: IN RUN "A" SPEED AND FUEL FLOW LIMITED BY THE BOUNDARY CONTROL.

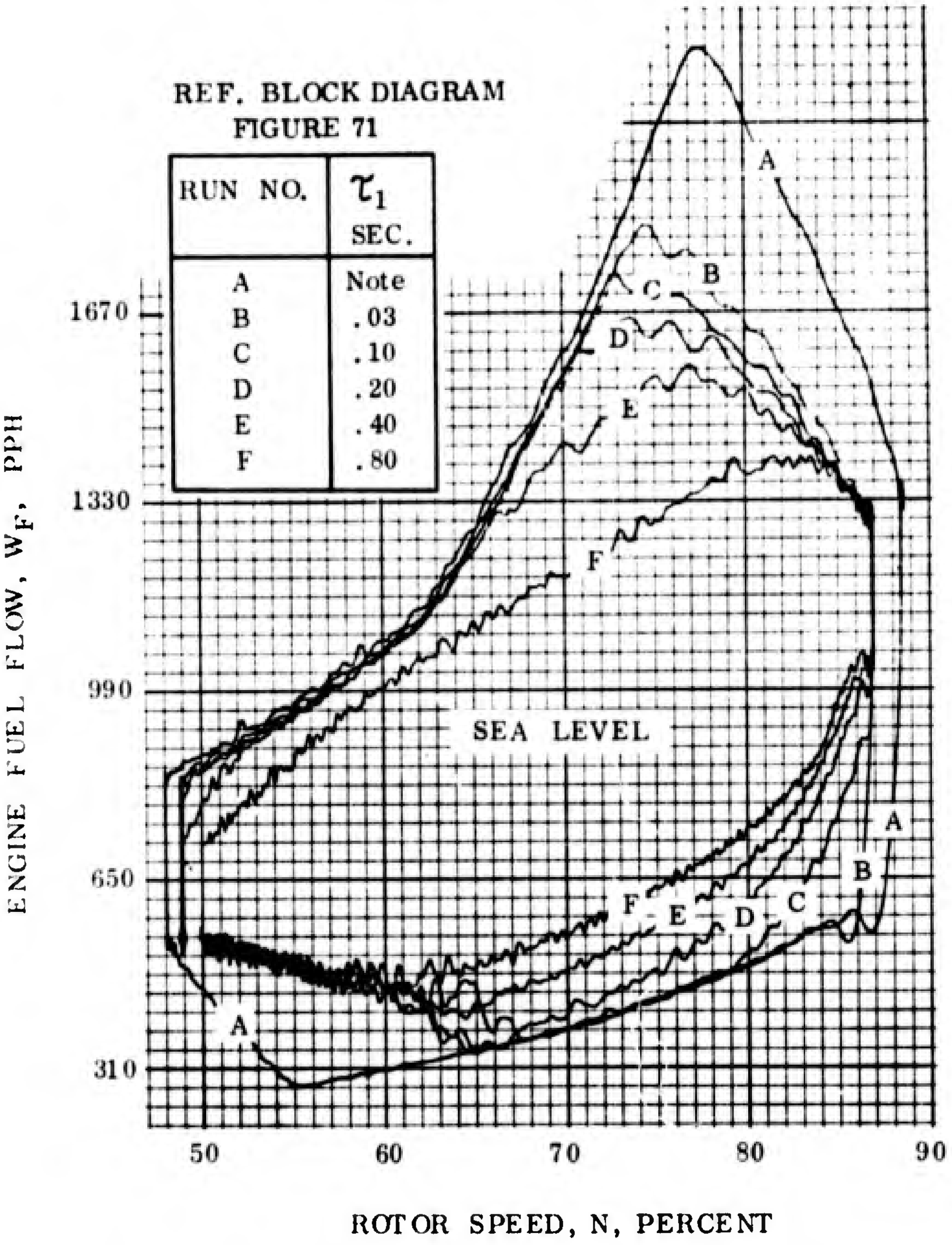

REF. BLOCK DIAGRAM FIGURE 71

RUN NO.	τ_1 SEC.
A	Note
B	.03
C	.10
D	.20
E	.40
F	.80

FIGURE 76. FUEL FLOW FEEDBACK LAG TIME CONSTANT VARIED FOR STEP CHANGES IN THROTTLE REQUEST

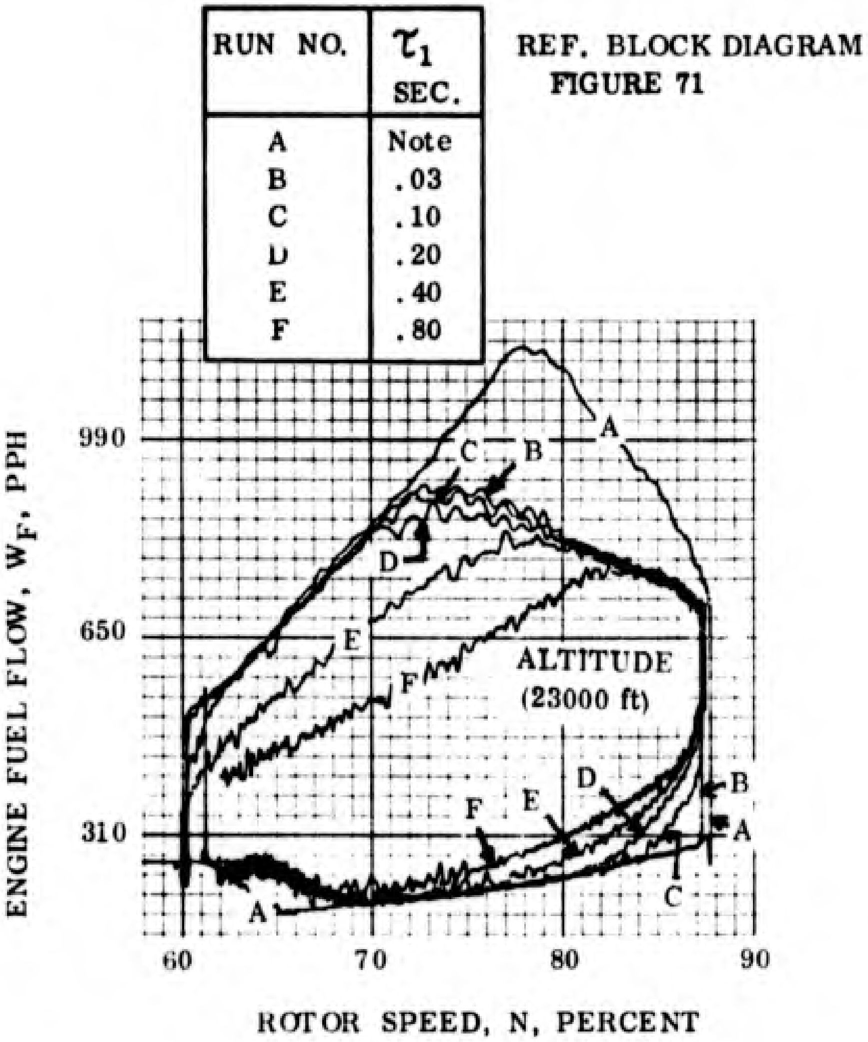

RUN NO.	τ_1 SEC.
A	Note
B	.03
C	.10
D	.20
E	.40
F	.80

REF. BLOCK DIAGRAM
FIGURE 71

FIGURE 77. FUEL FLOW FEEDBACK LAG TIME CONSTANT VARIED FOR STEP CHANGES IN THROTTLE REQUEST

RUNS B, C & D; τ_1 = .03 SEC., REF. BLOCK DIAGRAM FIGURE 71

RUN NO.	CONDITION
A	THROTTLE REQUEST RATE LIMITED TO PROPORTIONAL SPEED GOVERNOR (REPEAT OF RUN 3 FIGURE 67)
B	THROTTLE REQUEST STEPPED TO (P+I) GOVERNOR WHICH HAS N LIMITS EQUAL TO RUN A ABOVE.
C	SAME AS RUN B EXCEPT GAIN K5 HALVED TO 16.0%/SEC.
D	THROTTLE REQUEST RATE LIMITED AS IN RUN A; (P+I) GOVERNOR RATE LIMITED AS IN RUN C.

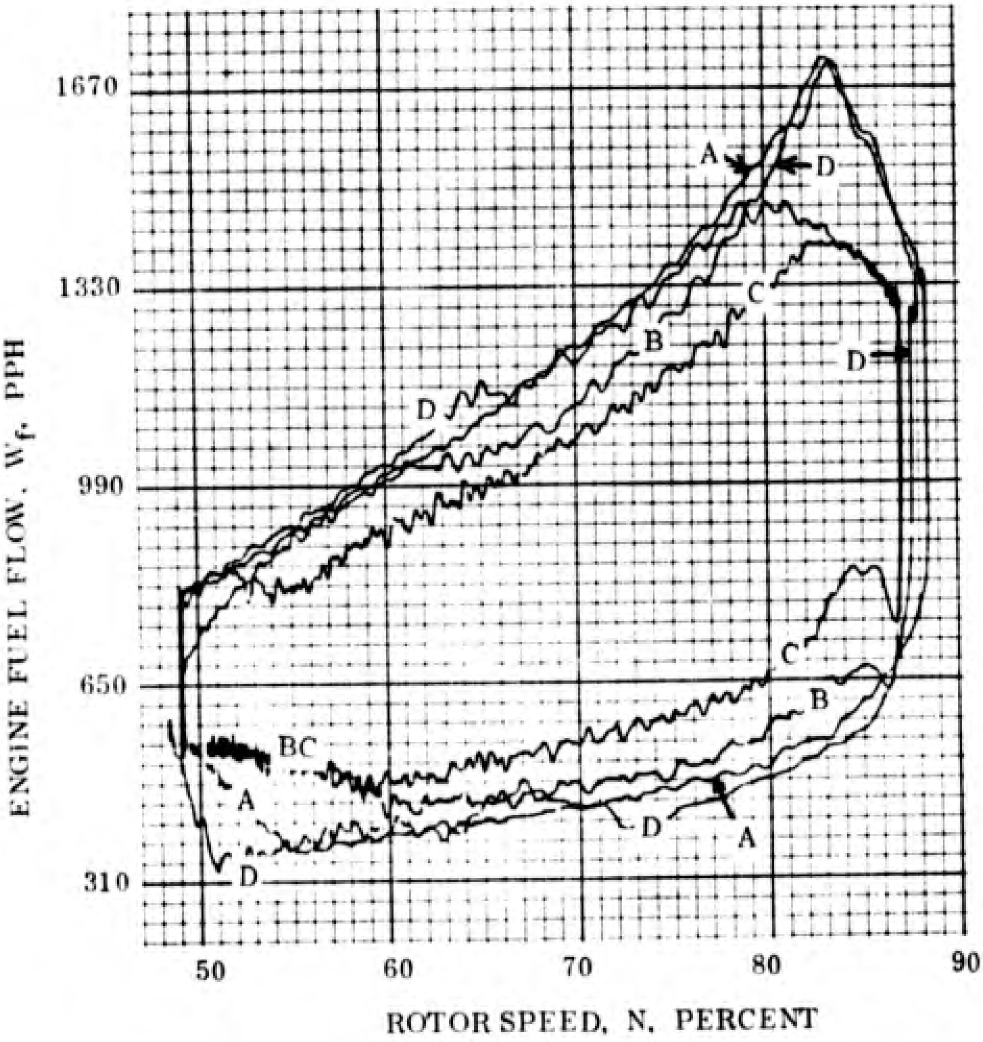

FIGURE 78. EFFECTS OF RATE LIMITED AND STEPPED THROTTLE REQUEST ON THE (P+I) SPEED GOVERNOR AND $\dot{N}$ LIMITER

THROTTLE REQUEST HAS THE FOLLOWING RATE LIMIT ON ALL RUNS:

$$\dot{N}\ \text{LIMIT} = 4.5 + 32\,\frac{(P_3 - P_2)}{57}\quad \%/\text{SEC.}$$

NOTE: RUN A USES PROPORTIONAL GOVERNOR IN FIGURE 69 RUN A

RUNS B THROUGH E, $\dot{N}$ LIMITER ON (P+I) GOVERNOR SET HIGH ($\dot{N}5$ = 66 %/SEC.)

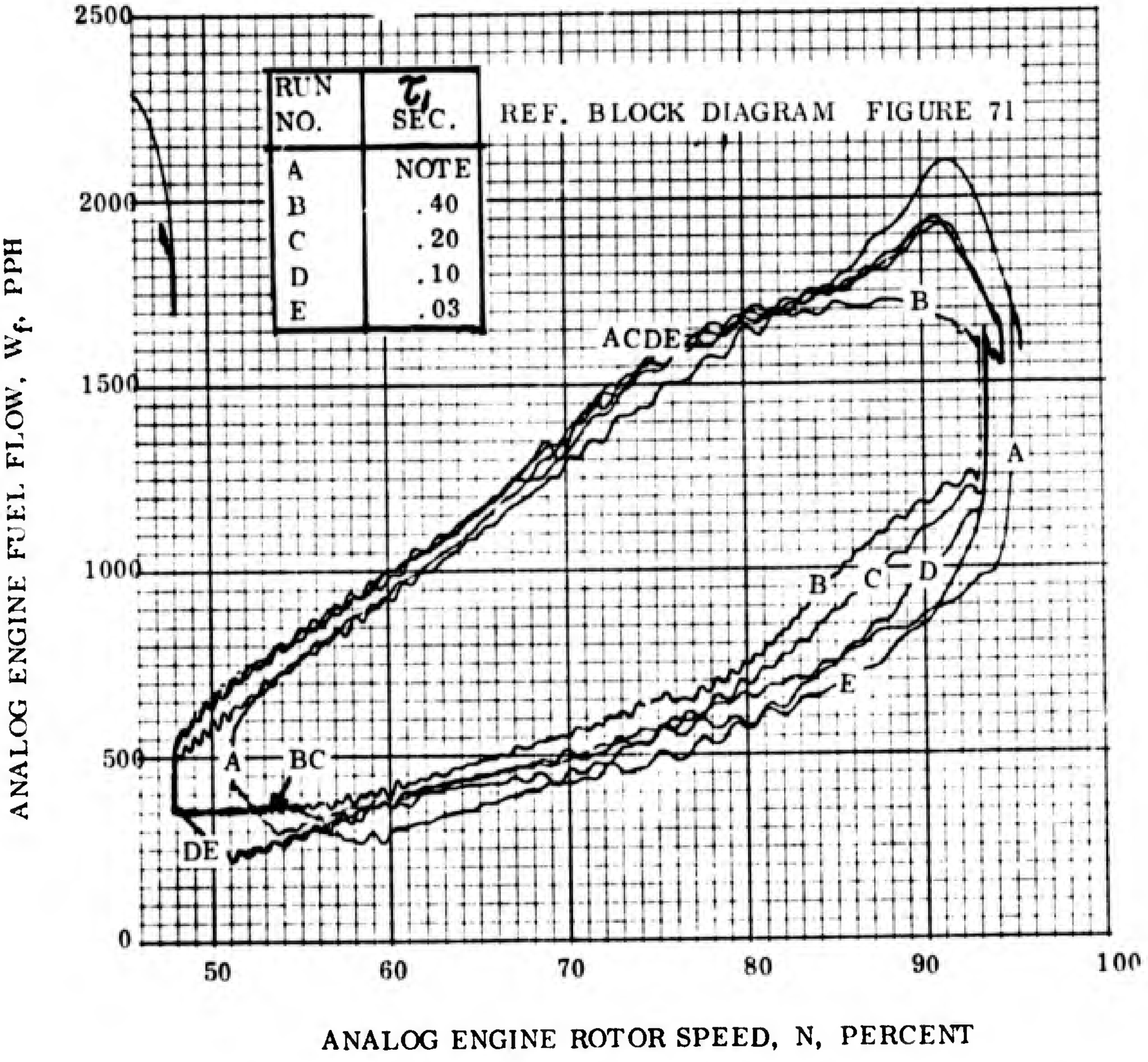

FIGURE 79. EFFECTS OF THE FUEL FLOW FEEDBACK LAG ON THE (P+I) GOVERNOR FOR RATE LIMITED THROTTLE REQUESTS

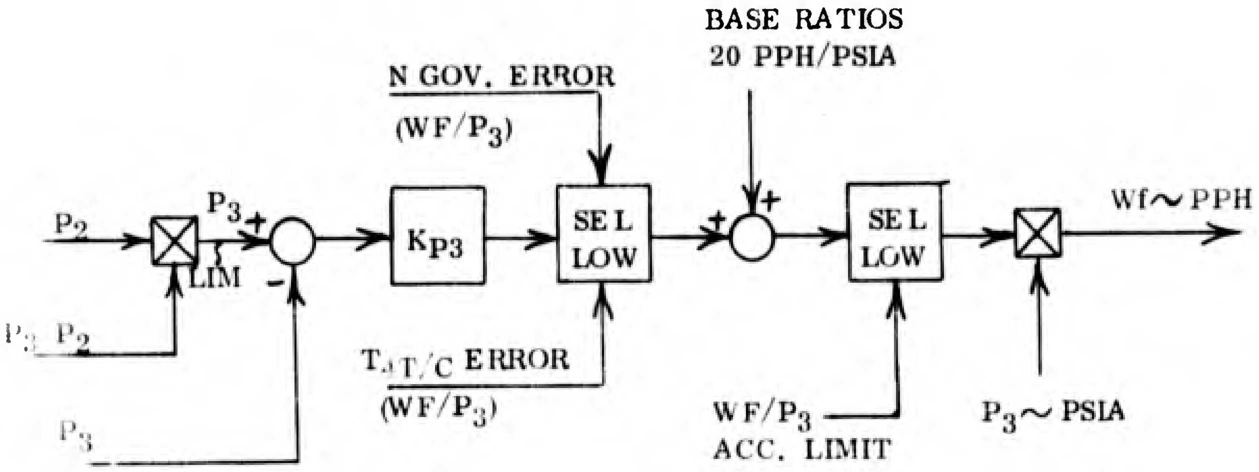

Figure 80 -- Burner Pressure Limiter Control Block Diagram

TURBINE INLET TEMPERATURE LIMITING

Proportional and proportional plus integral turbine inlet temperature limiting control modes were tested.

Proportional Control

The proportional turbine inlet temperature (T4) limiter was implemented per the block diagram shown in Figure 82. The test results also shown in Figure 82 were run on the analog engine simulation. During an acceleration, temperature loop proportionally increases fuel-pressure ratios above the base ratio level which is set near the engine steady state requirements. As a result, error between the scheduled temperature limit and the sensed temperature proportionally increases as the limit is moved above the steady state temperature level for a given proportional gain. Reference gain, Run B, which has a proportional gain of .11 ratios per degree Fahrenheit.

Proportional Plus Integral Control

The proportional plus integral turbine inlet temperature limiter was implemented per block diagram in Figure 84. Results from runs made on the analog computer engine simulation and the real engine are shown in Figures 83 and 84 respectively. Accelerations made from 50 percent speed show the engine

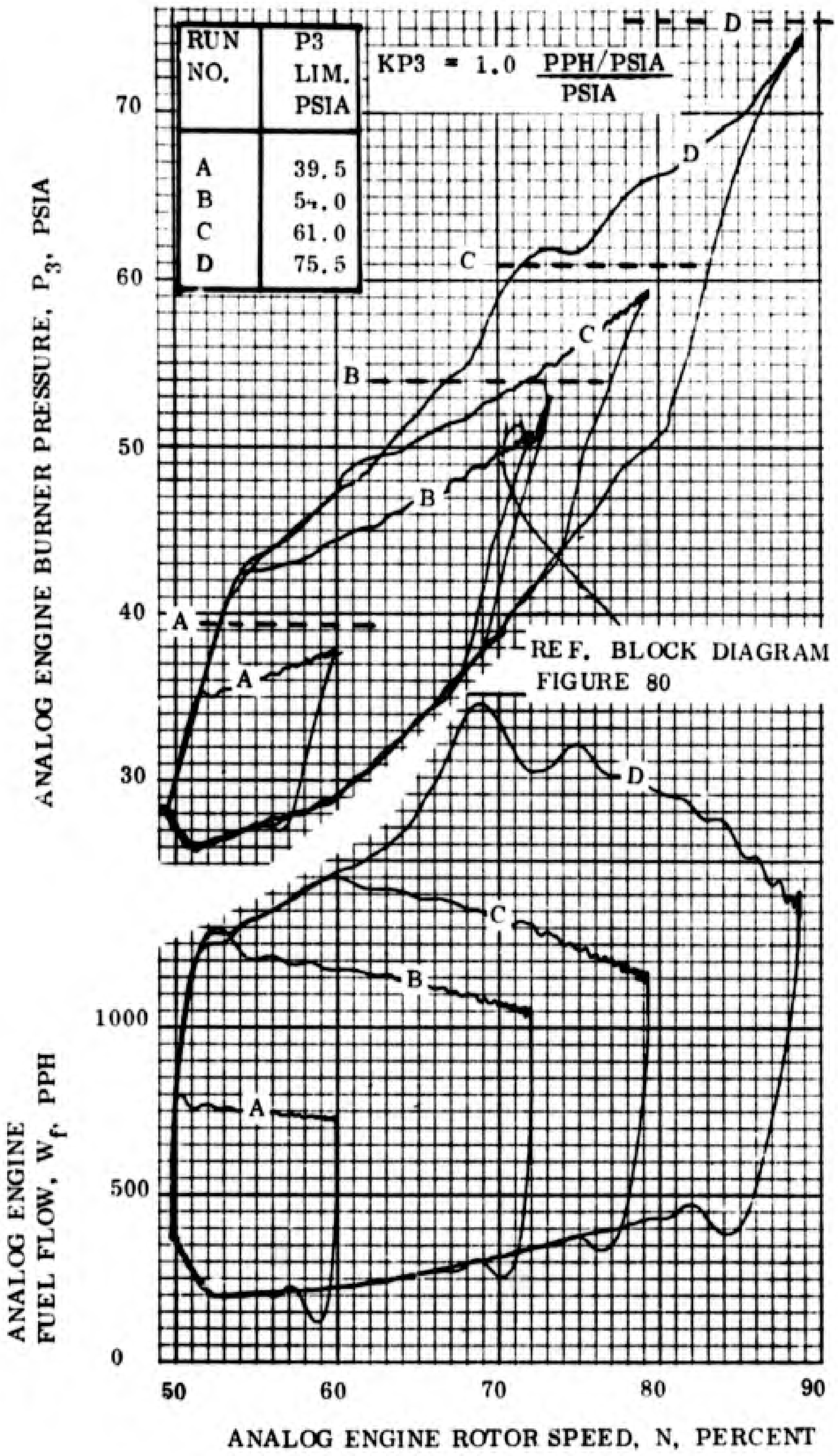

FIGURE 81. VARIOUS LEVELS OF BURNER PRESSURE LIMITING USING PROPORTIONAL CONTROL

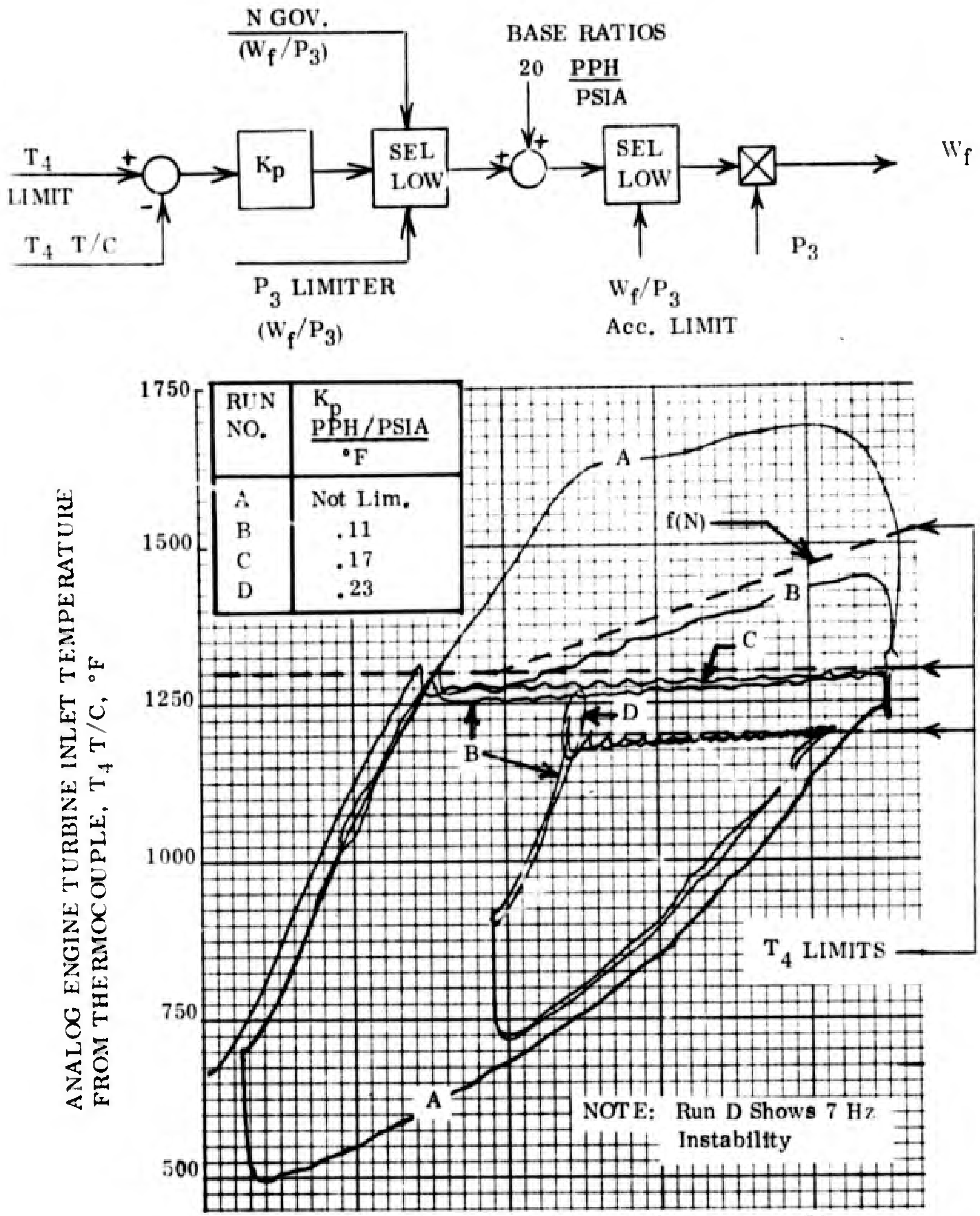

FIGURE 82 -- VARIOUS LEVELS OF TURBINE INLET TEMPERATURE LIMITING USING PROPORTIONAL CONTROL

temperature being held close to scheduled limits. Accelerations made from higher speed settings prevented the sensed temperature from reaching the limit because of the slow thermocouple response. Attempts were made to vary the proportional gain (Kp) inversely proportional to burner pressure as implemented in block diagram Figure 71. The purpose was to cause the effective lead time constant (KP/KI) resulting from the proportional plus integral loop to be more closely matched to the variations in the thermocouple lag time constant. Engine tests showed that the effectiveness of the loop to correct temperature errors was reduced at higher speeds. Also the additional loop from burner pressure to fuel flow in the proportional path reduced the stability margin during temperature limiting. Figure 85 shows some test results using the proportional gain compensation. It is felt that varying the integral gain (KI) proportional to burner pressure would be more appropriate in matching the proportional plus integral control loop response to that of the thermocouple.

Effect of Proportional Plus Integral and Proportional Limiters on Engine Temperature

Dynamic compensation was applied to the thermocouple output to provide a better indication of actual engine temperature. The compensation used is given in Figure 86. Note, the compensated output was only used for recording purposes and was not used in any of the control loops. Time traces in Figure 86 showed that the proportional controller allowed engine temperature to overshoot the limit by 250° while sharply limiting the output from the thermocouple. The proportional plus integral controller sharply held engine temperature nearly equal to the limit while allowing the thermocouple output to increase slowly. The corresponding X-Y plots noted on the time traces show the fuel flow changes associated with the limiter actions.

WF/P3, T4 and P3 LIMITERS ACTIVATED TOGETHER

Figure 87 shows proportional limits applied to engine parameters of speed (N), burner pressure (P3) and turbine inlet temperature (T4). Note during acceleration Runs A, B, C, and D, the limiters that are hit in sequence are WF/P3, T4 and P3. In Run E the T4 reference was increased to permit P3 limiting only. Run F shows full range acceleration and deceleration transients with specification fuel-pressure ratios and the speed governor providing the limiting action. Note, the fuel pressure ratio limit is absolute.

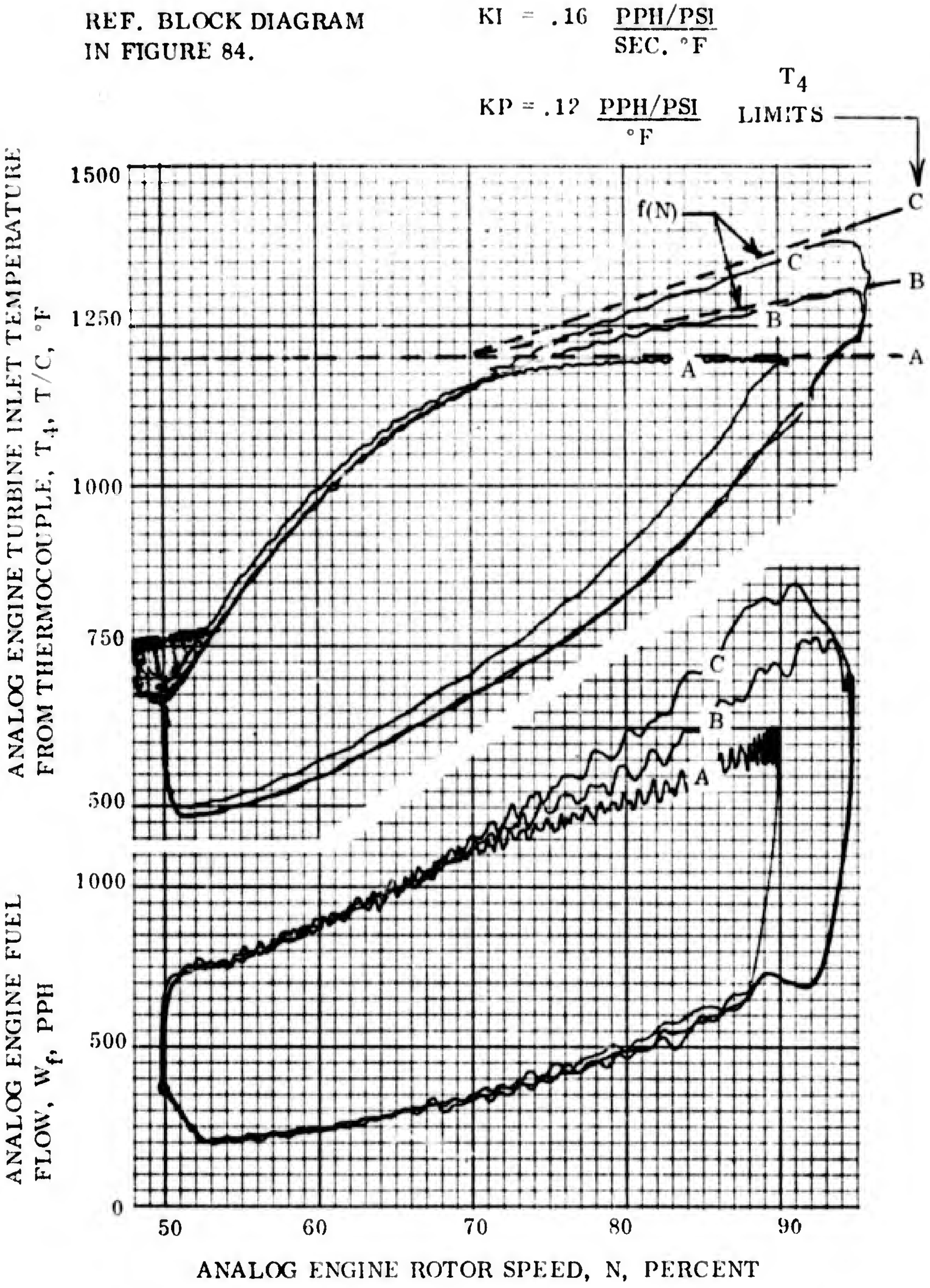

REF. BLOCK DIAGRAM
IN FIGURE 84.

FIGURE 83. VARIOUS LEVELS OF TURBINE INLET TEMPERATURE LIMITING USING PROPORTIONAL PLUS INTEGRAL CONTROL

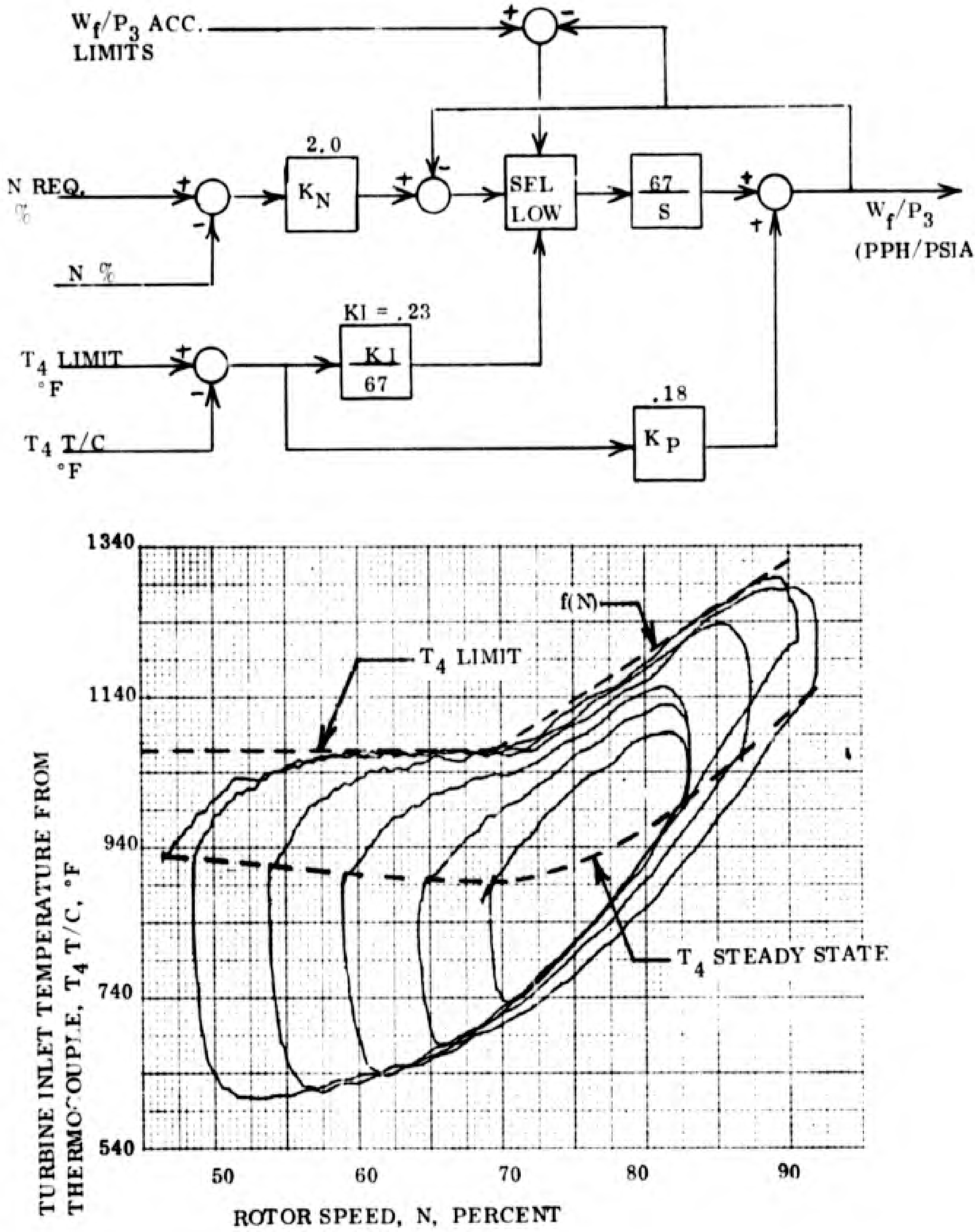

FIGURE 84. TURBINE INLET TEMPERATURE LIMITING USING PROPORTIONAL PLUS INTEGRAL CONTROL

$K_{3I} = .30 \dfrac{\text{RATIOS/SEC}}{°\text{F}}$ REF. BLOCK DIAGRAM FIGURE 71 FOR CONTROL

$K_{3P} = .03 \left(\dfrac{57}{P_3 - P_2}\right) \dfrac{\text{RATIOS}}{°\text{F}}$ (LIMITED TO .06 MAX)

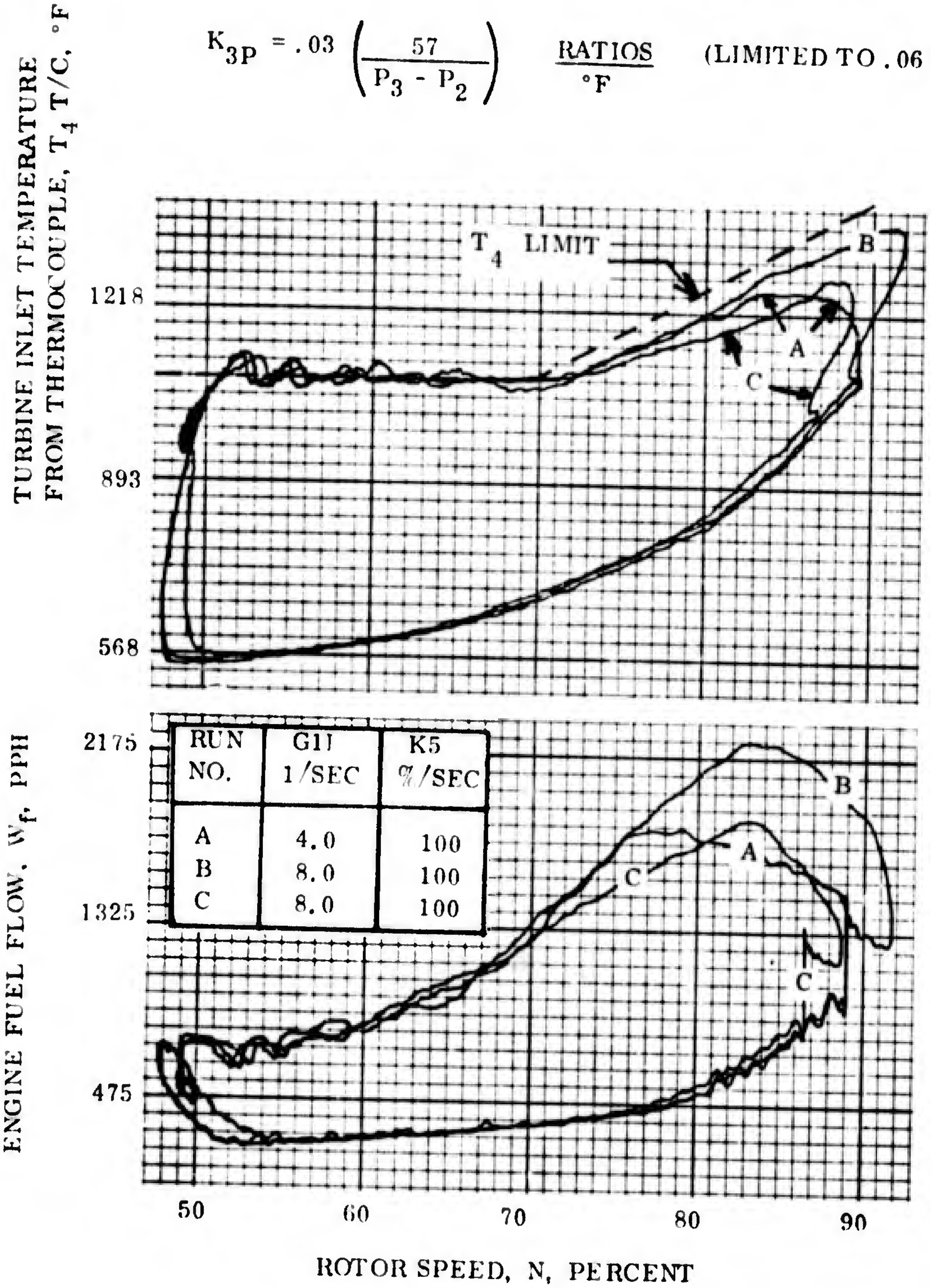

RUN NO.	G11 1/SEC	K5 %/SEC
A	4.0	100
B	8.0	100
C	8.0	100

FIGURE 85. TURBINE INLET TEMPERATURE LIMITING RISING PROPORTIONAL PLUS INTEGRAL CONTROL. PROPORTIONAL GAIN VARIED AS A f (P3-P2)

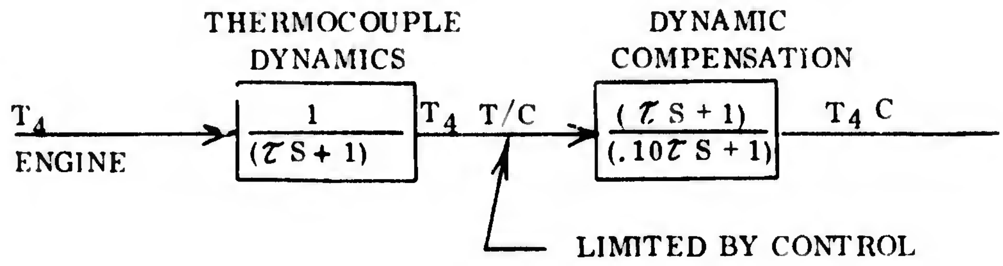

$$\tau = .20\,\frac{(P3 - P2)o}{(P3 - P2)}\ \text{SEC;}\quad (P3 - P2)o = 57\ \text{PSI AT 95\% N AND SEA LEVEL}$$

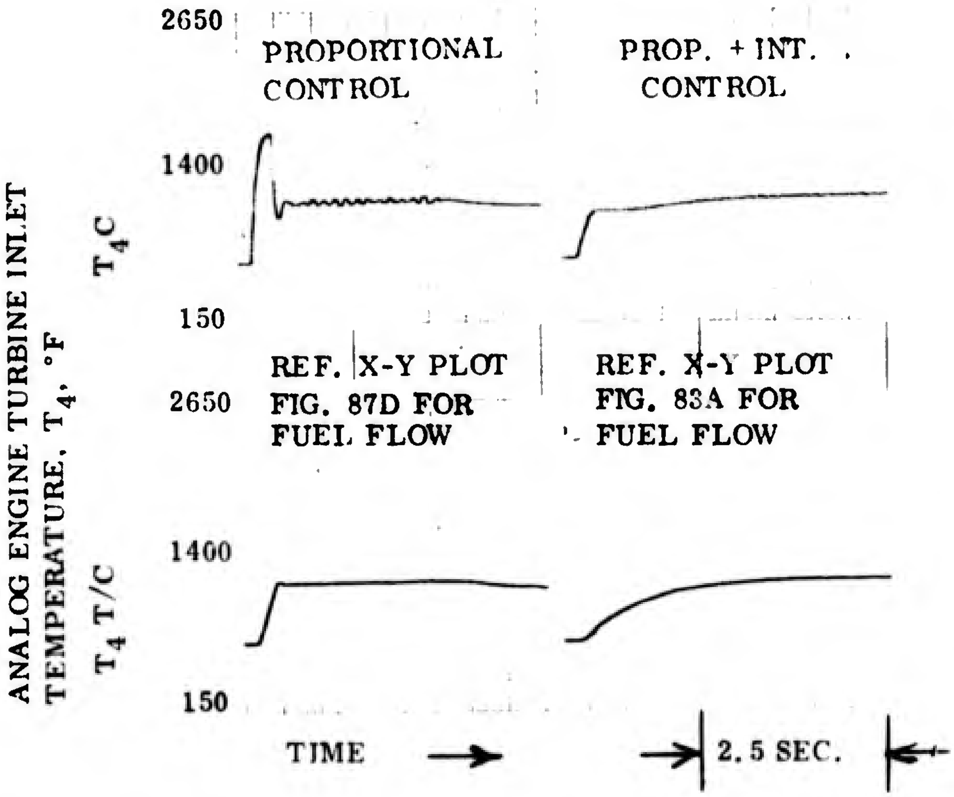

FIGURE 86. TIME TRACE SHOWING THE EFFECTS OF PROPORTIONAL AND PROPORTIONAL PLUS INTEGRAL CONTROL ON TURBINE INLET TEMPERATURE

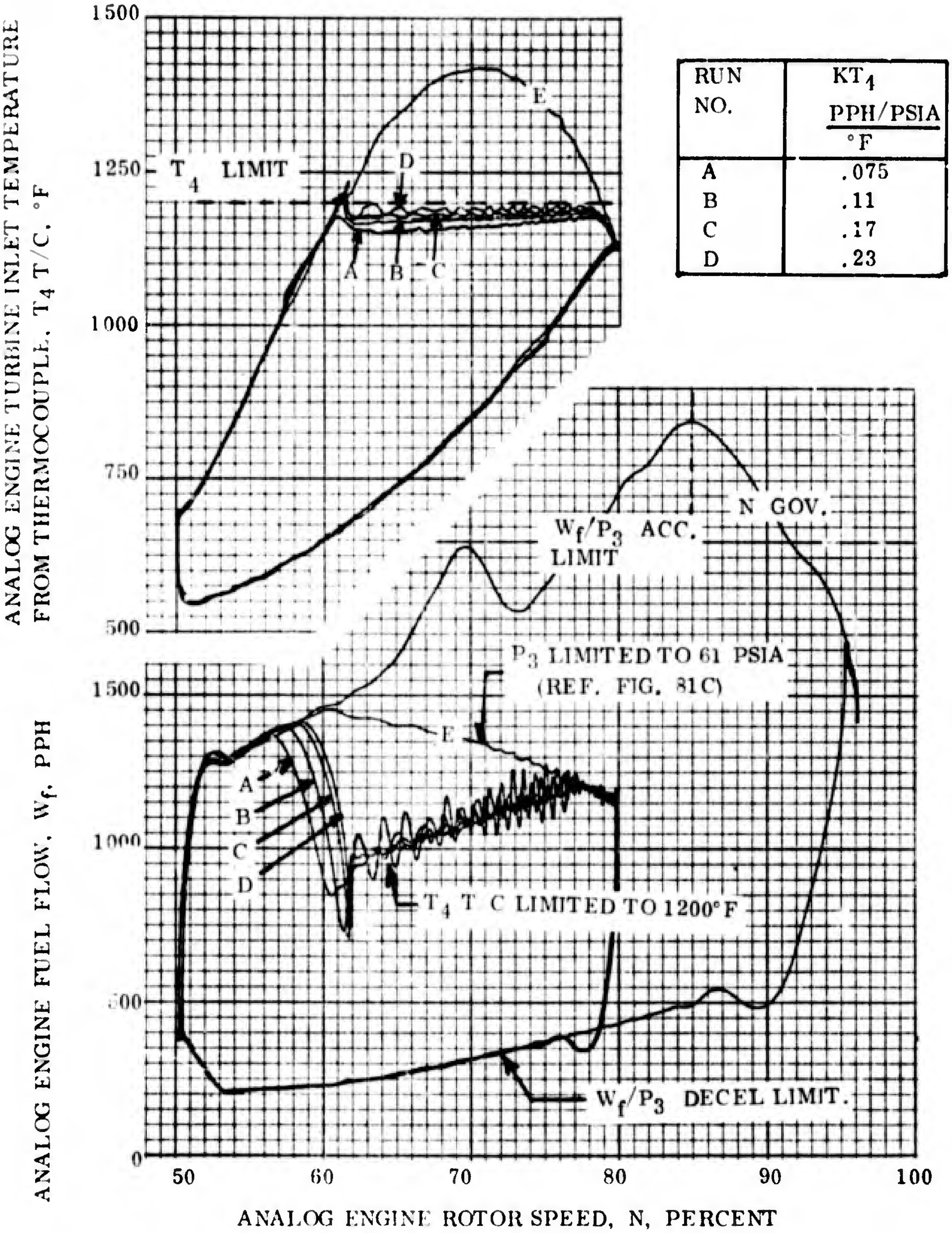

FIGURE 87. ACCELERATION TRANSIENTS WITH THE ACCELERATION RATIOS, TURBINE INLET TEMPERATURE AND BURNER PRESSURE LIMITERS ACTIVE. REF. FIGURE 80 FOR BLOCK DIAGRAM

EXHAUST NOZZLE CONTROL OF TURBINE EXIT TEMPERATURE

The results of proportionally controlling turbine exit temperature (T5) with the engine exhaust nozzle Area (A8) are given in Figure 88. The limiter showed control of the nozzle area; however, the weak effect of nozzle area on T5 produced minor changes on turbine exit temperature. A higher proportional gain would also make the control loop more effective.

COMPRESSOR AIRFLOW $\Delta P/P$ LIMITING

Compressor airflow was limited by a proportional plus integral control loop shown by the block diagram on Figure 89. Analog engine simulation test results presented in Figure 89 show the limiter to be quite effective in holding airflow $\Delta P/P$ on the scheduled limits. Increasing the integral gain relative to the proportional gain (decreasing KP/KI) reduces the anticipation characteristics as airflow $\Delta P/P$ approaches the limit line. Compare Run C with Run D which shows the reduced anticipation. Airflow limiting test results on the actual J85 engine are presented in Figure 90. Run B shows the effectiveness of the $\Delta P/P$ acceleration limiter when compared to Run A in which acceleration was made on engine specification fuel-pressure ratios.

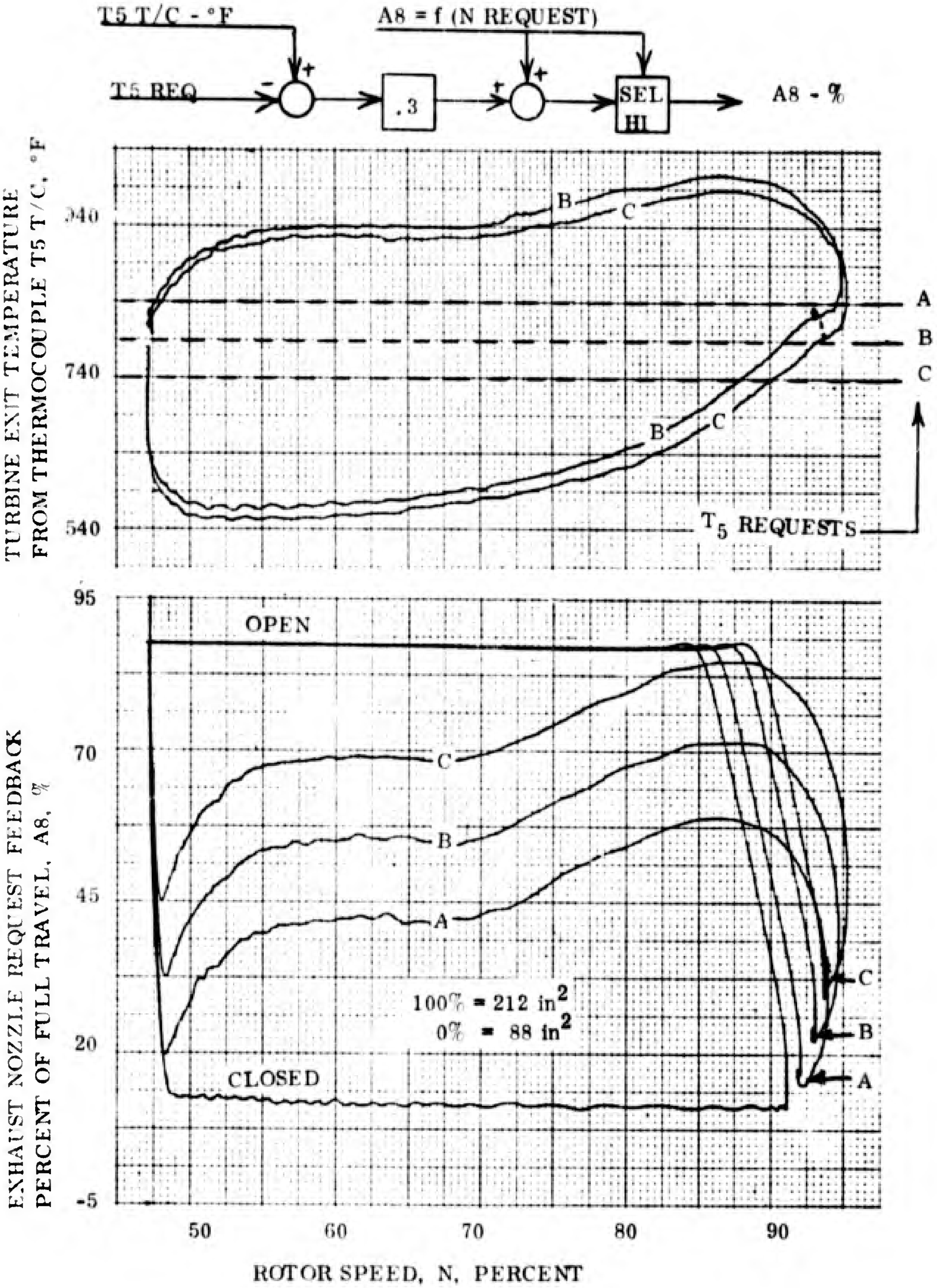

FIGURE 88. TURBINE EXIT TEMPERATURE PROPORTIONALLY CONTROLLED BY ENGINE EXHAUST NOZZLE

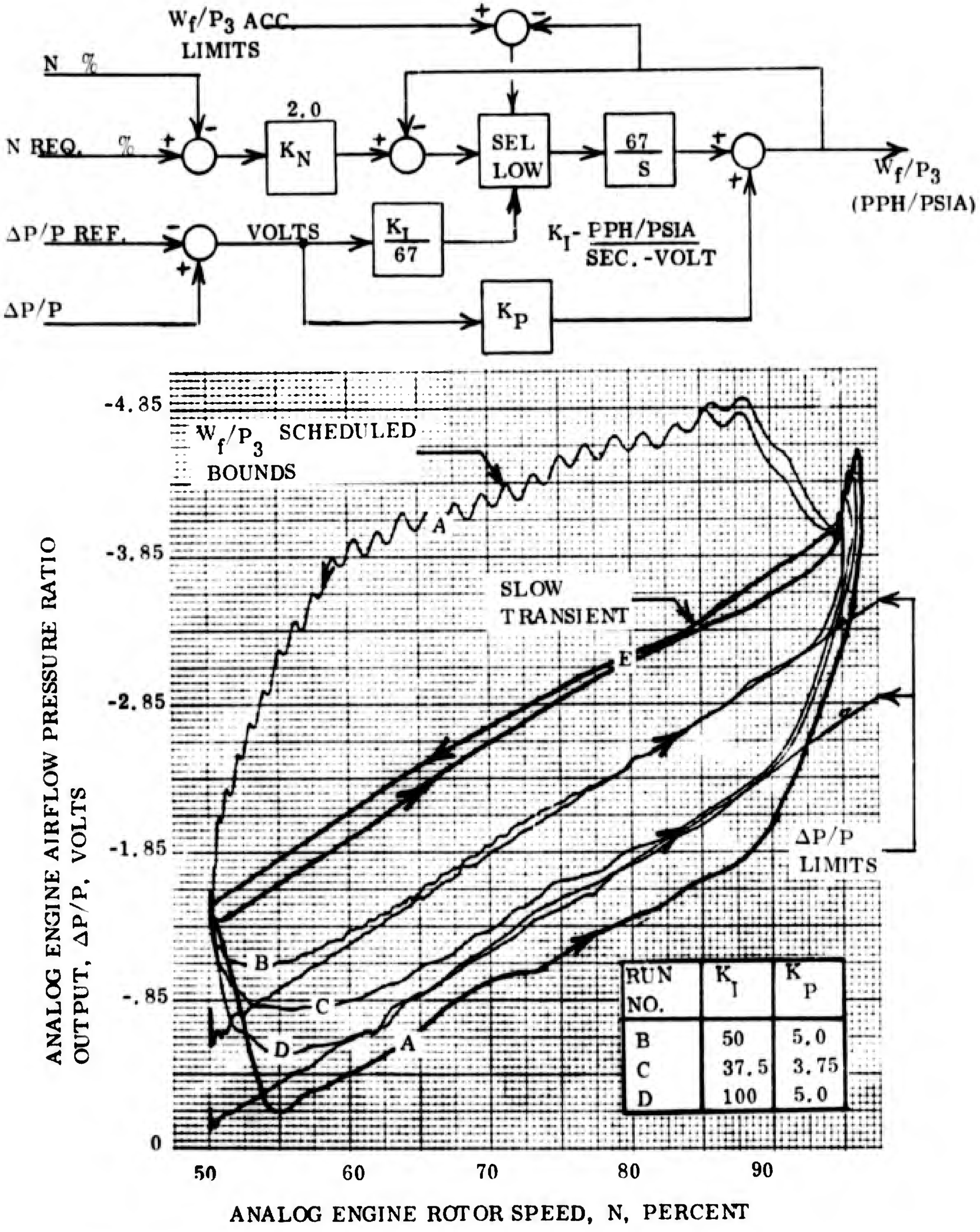

FIGURE 89. AIRFLOW PRESSURE RATIO LIMITING DURING ACCELERATION TRANSIENTS USING PROPORTIONAL PLUS INTEGRAL CONTROL

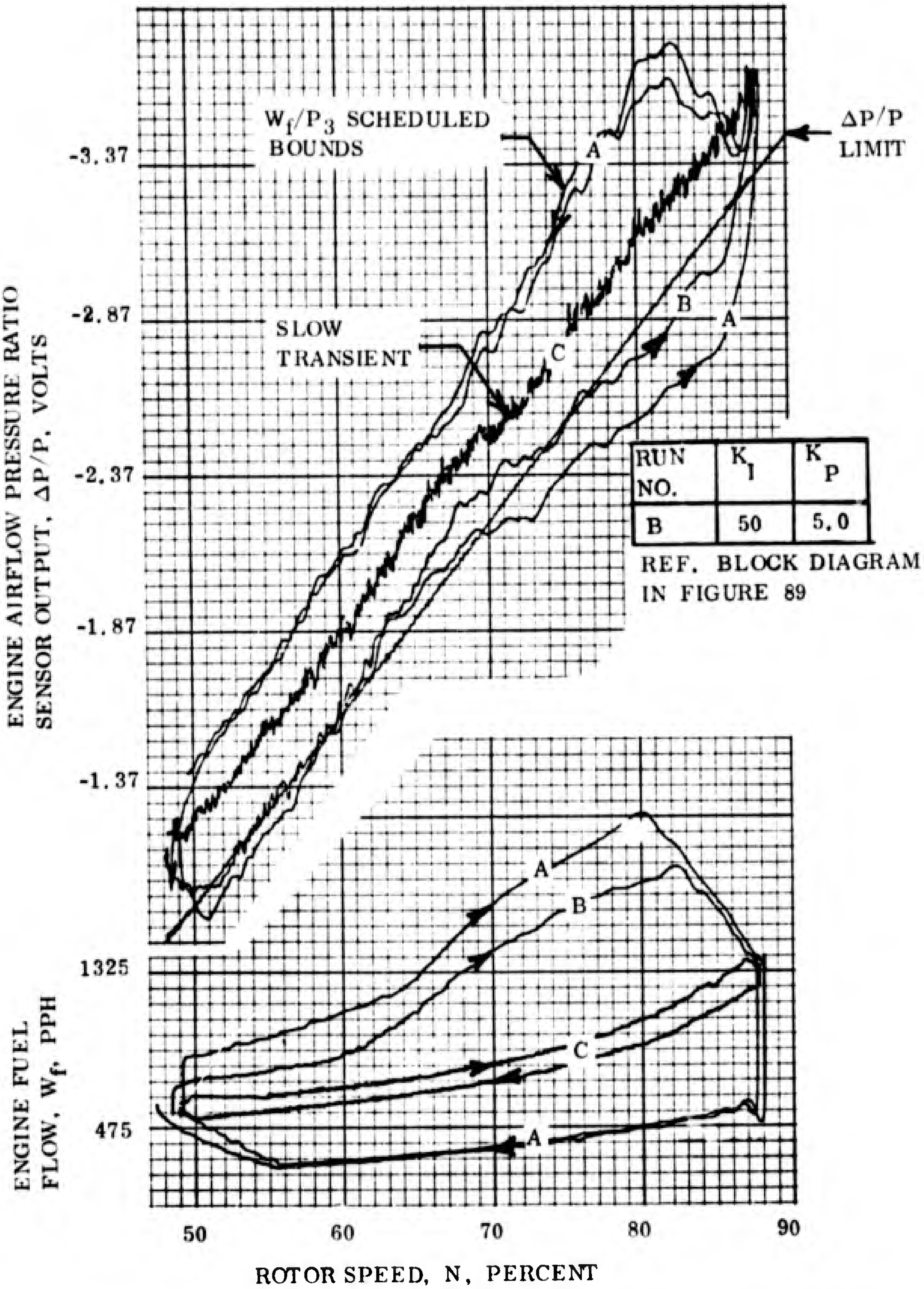

FIGURE 90. ENGINE AIRFLOW PRESSURE RATIO LIMITING DURING ACCELERATION TRANSIENT USING PROPORTIONAL PLUS INTEGRAL CONTROL

SECTION VI

SYSTEM PERFORMANCE INFORMATION

STEADY STATE ENGINE DATA

Steady state performance data was run on the engine at sea level and altitude conditions. The steady state data was obtained by ramping the throttle request ±2.3 percent per second with a proportional governor providing fuel to maintain the speed changes. The data shows the influence the test cell has on the engine parameters. In addition, the engine exhaust nozzle, compressor bleeds and inlet guide vanes were moved off their nominal schedules to show their effects on the engine parameters. The following table lists the engine variables that were plotted versus speed and the corresponding figure number of the plot.

Figure No.	Engine Data
91	Fuel Flow to the Engine -- W_f
92	Fuel-Pressure Ratios -- W_f/P_3
93	Engine Inlet and Discharge Pressure -- P_2 and P_o
94 and 95	Compressor Interstage Pressure Rise -- $(P_{2.3}-P_2)$, $(P_{2.4} - P_2)$ and $(P_{2.5} - P_2)$
96	Burner Pressure -- P_3
97	Turbine Discharge Pressure -- P_5
98 and 99	Turbine Inlet and Discharge Temperature -- T_4 and T_5
100	Compressor Discharge Airflow -- $\Delta P/P$

Steady state engine data at three engine exhaust nozzle areas (A_8) are given in Table 3 for various speeds (N). The engine parameters include nozzle fuel flow (W_f), burner pressure P_3, turbine discharge pressure (P_5), turbine inlet temperature T_4 and turbine discharge temperature T_5.

RUN NO.	A8 %
A	87.5
B	57.5
C	27.0

100% A8 STROKE = 212 $in.^2$
0% A8 STROKE = 88 $in.^2$

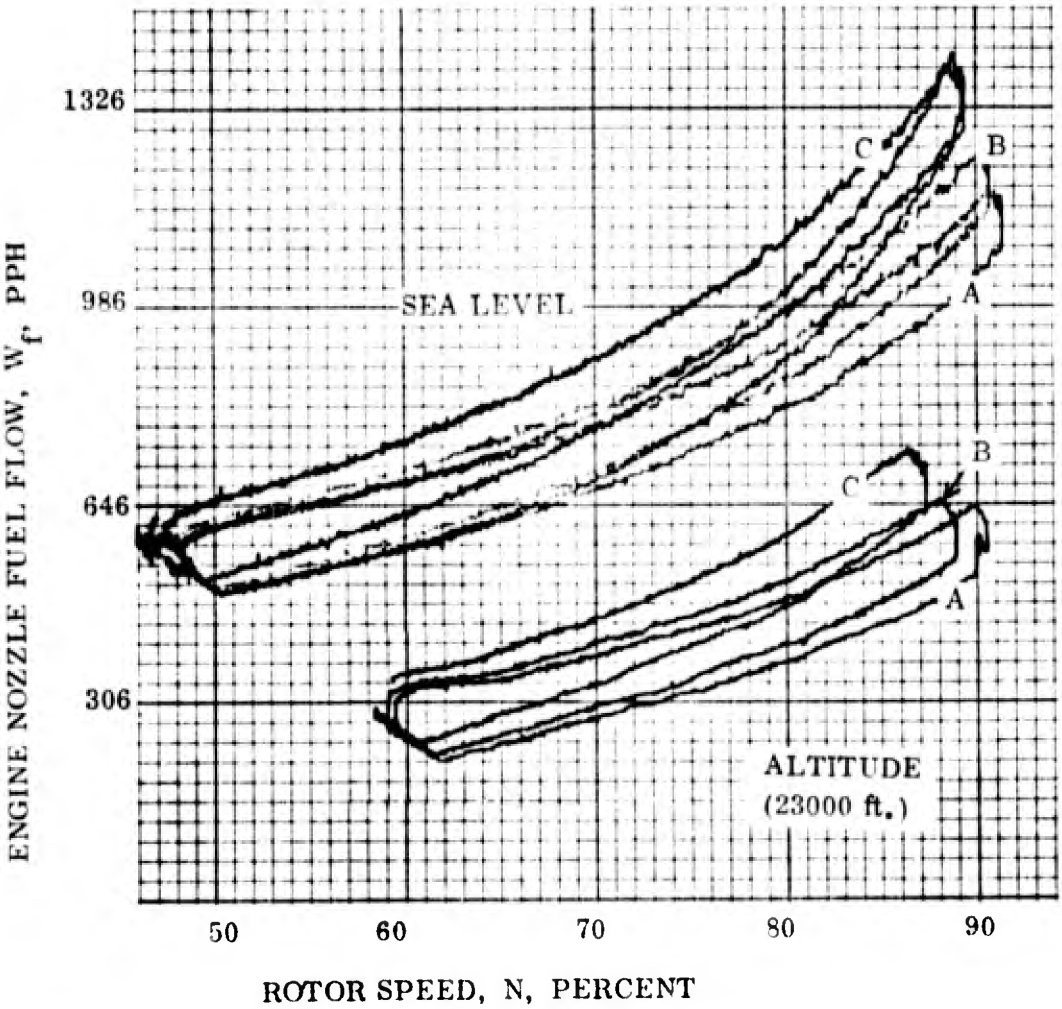

FIGURE 91. ENGINE FUEL FLOW AS AFFECTED BY ENGINE EXHAUST NOZZLE AREA

RUN NO.	A8 %
A	87.5
B	57.5
C	27.0

100% A8 STROKE = 212 $in.^2$
0% A8 STROKE = 88 $in.^2$

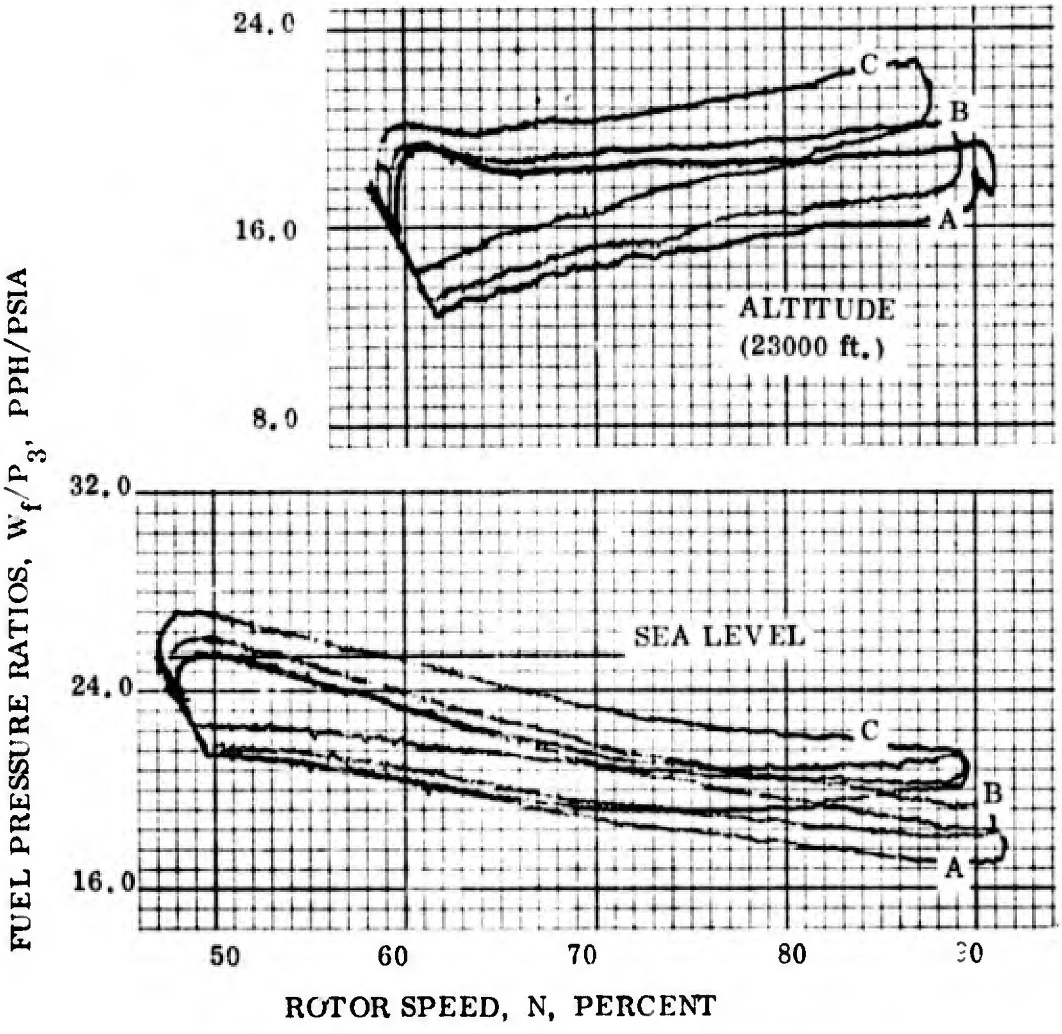

FIGURE 92. FUEL-PRESSURE RATIOS AS AFFECTED BY ENGINE EXHAUST NOZZLE AREA

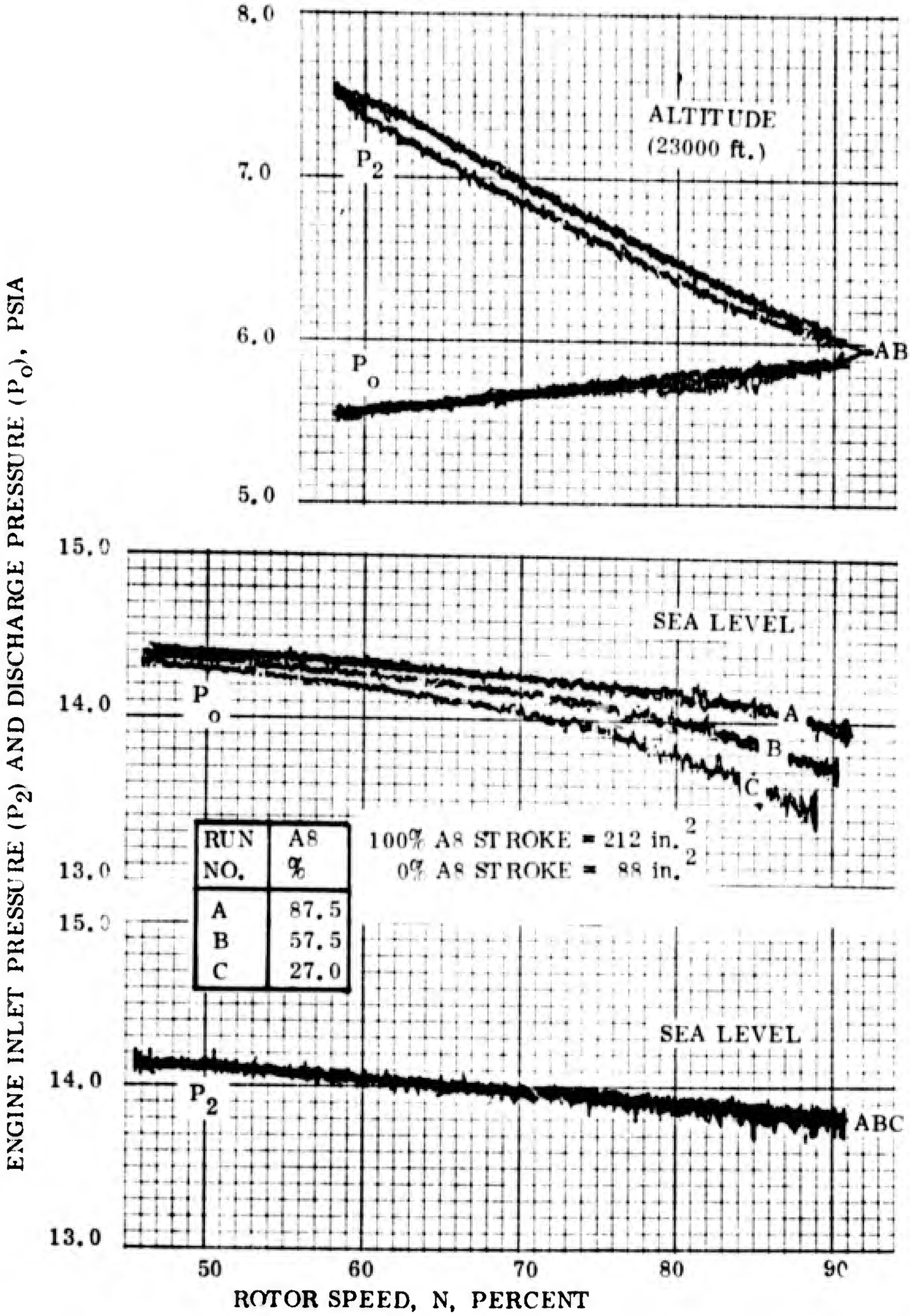

FIGURE 93. ENGINE INLET AND DISCHARGE PRESSURES AS AFFECTED BY ENGINE EXHAUST NOZZLE AREA AND TEST CELL CONDITIONS

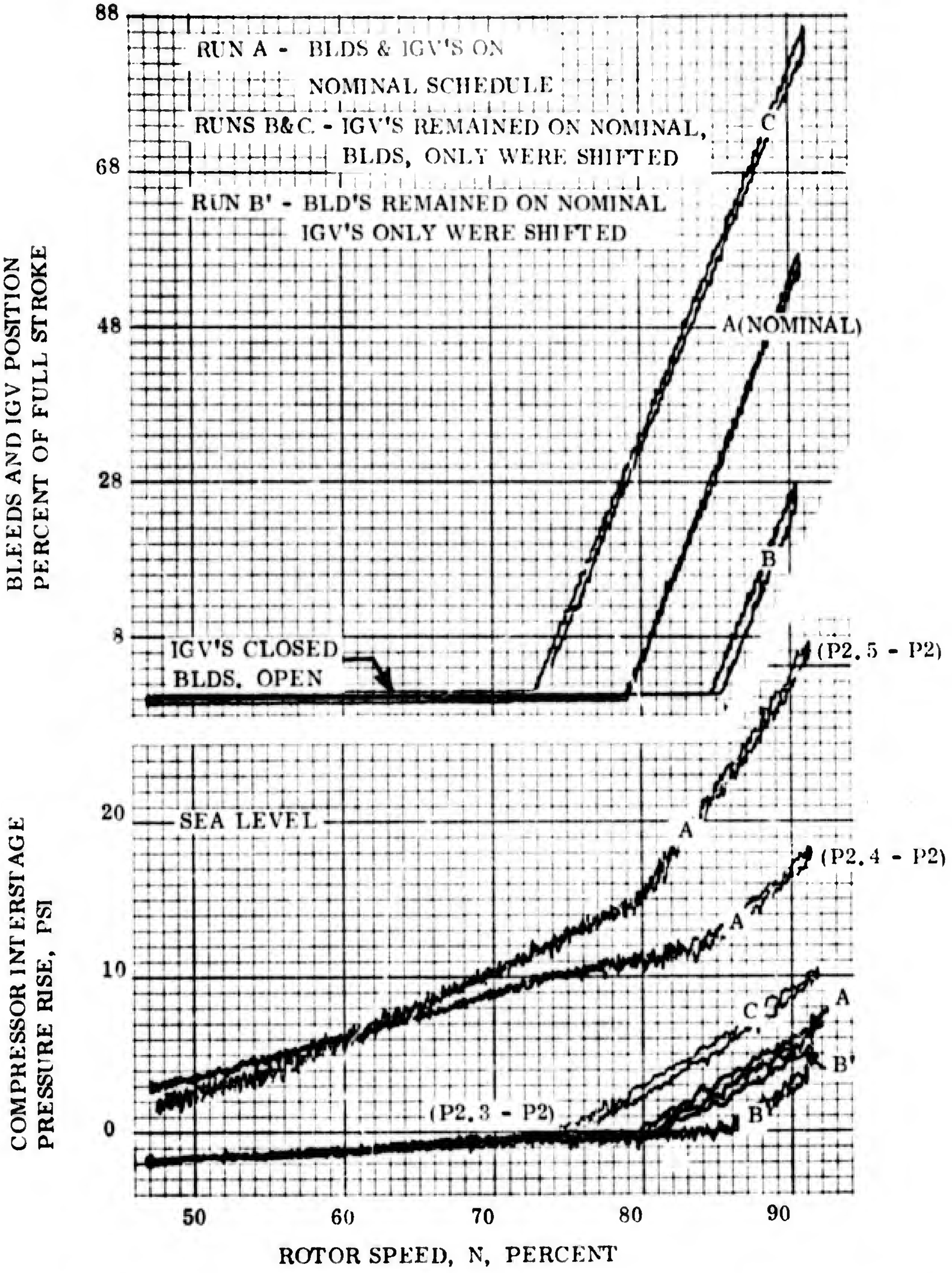

FIGURE 94. COMPRESSOR INTERSTAGE PRESSURE RISE AS AFFECTED BY BLEED VALVE AND INLET GUIDE VANE POSITIONS

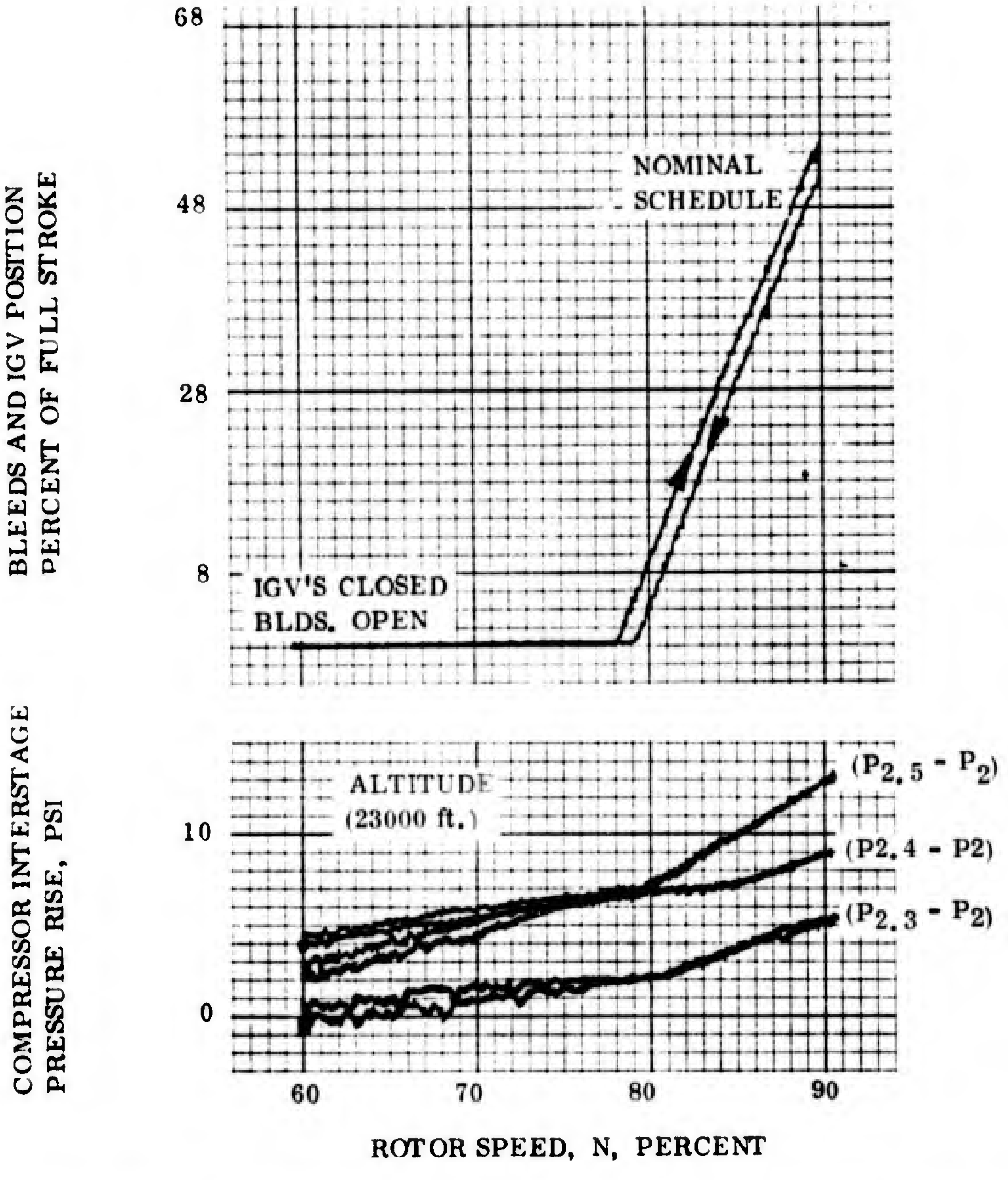

FIGURE 95. COMPRESSOR INTERSTAGE PRESSURE RISE AS AFFECTED BY BLEED VALVE AND INLET GUIDE VANE POSITIONS

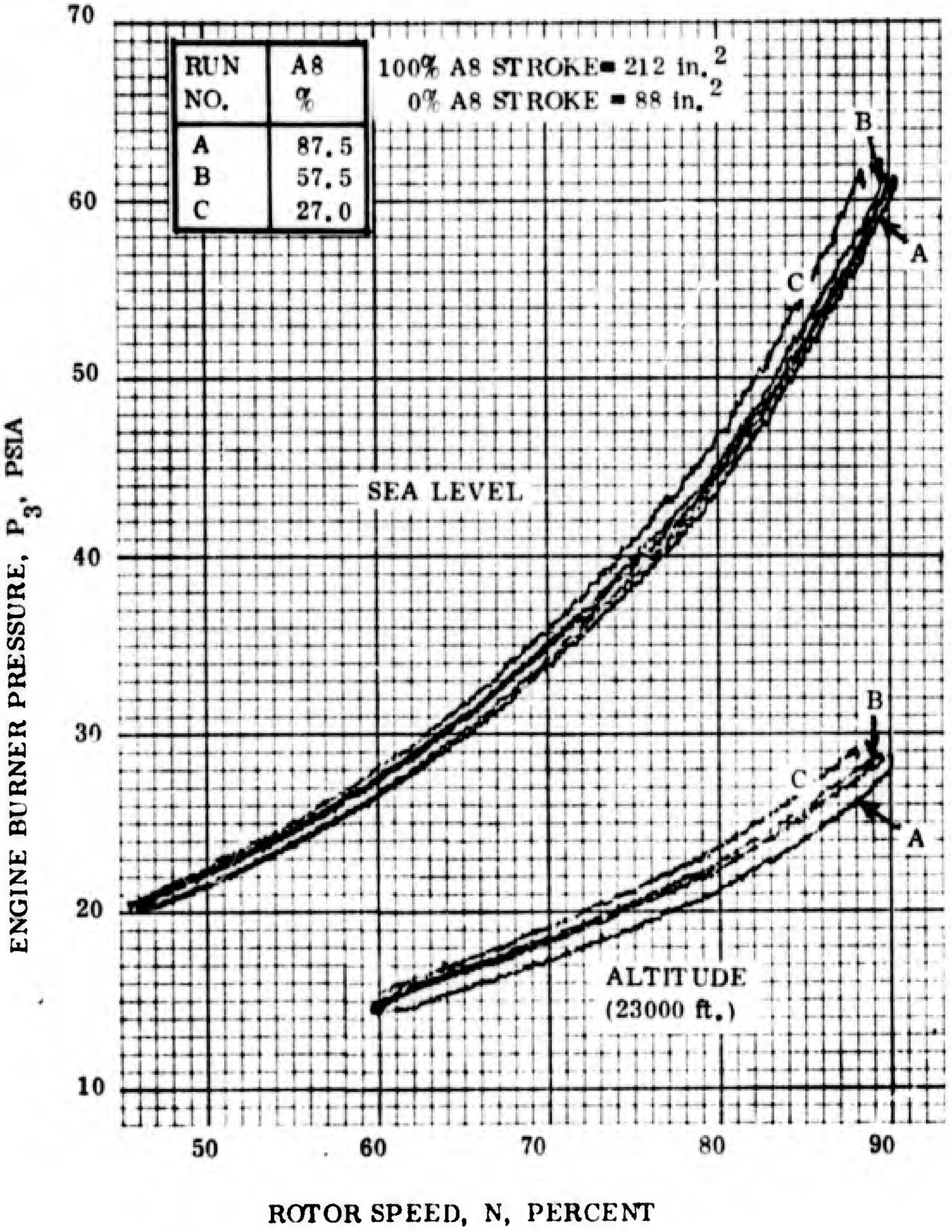

FIGURE 96. BURNER PRESSURE AS AFFECTED BY ENGINE EXHAUST NOZZLE AREA (A8)

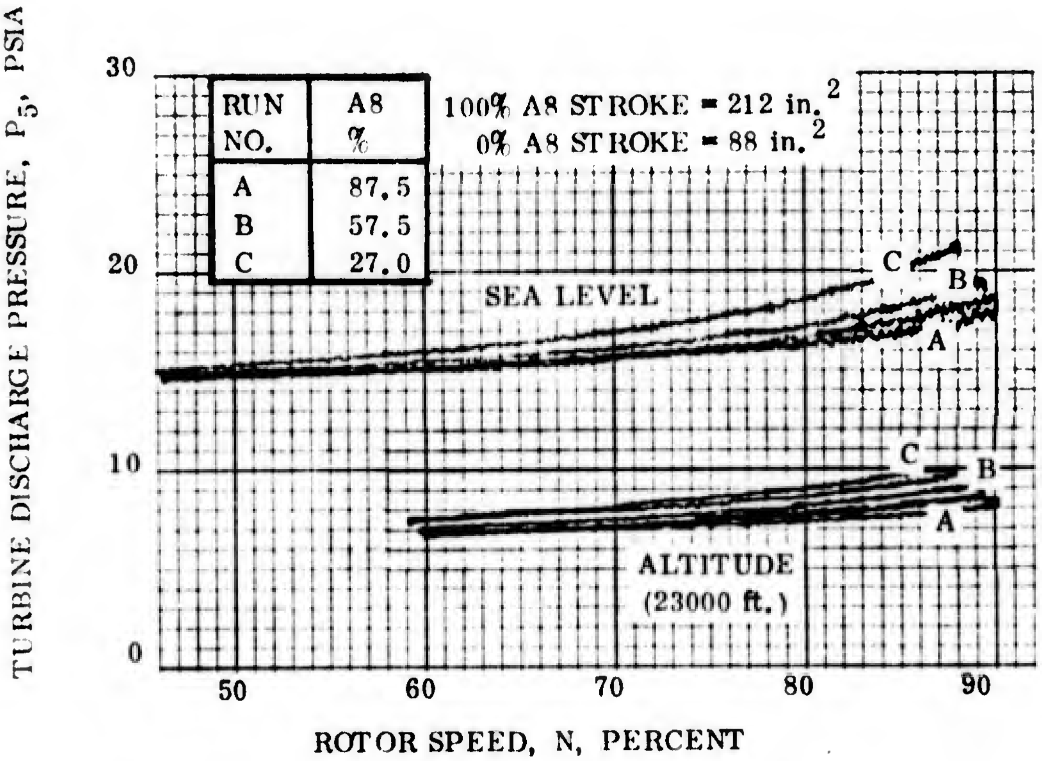

FIGURE 97. TURBINE DISCHARGE PRESSURE AS AFFECTED BY ENGINE EXHAUST NOZZLE AREA (A8)

RUN NO.	A8 %
A	87.5
B	57.5
C	27.0

100% A8 STROKE = 212 in.^{2}
0% A8 STROKE = 88 in.^{2}

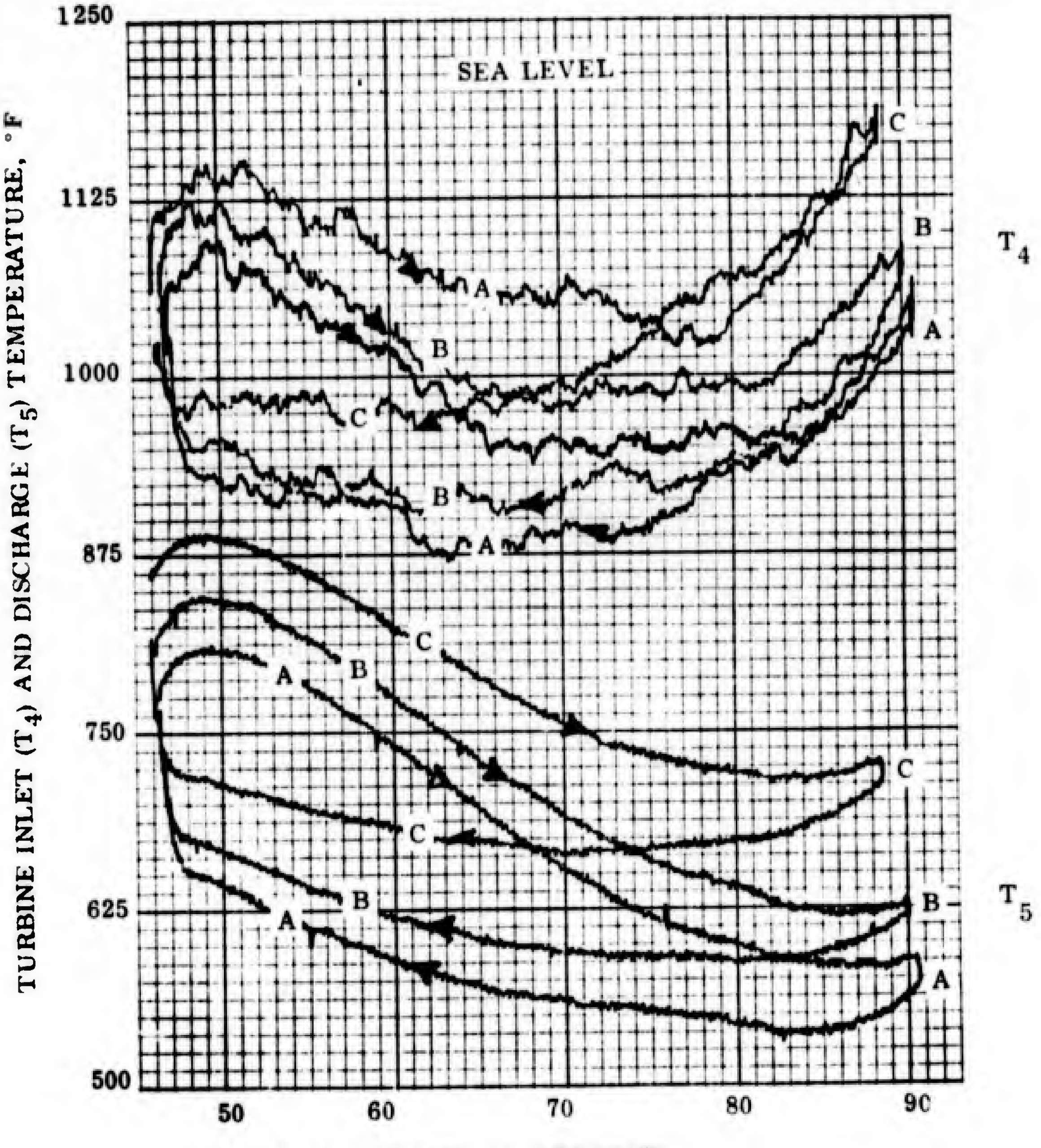

FIGURE 98. TURBINE INLET AND DISCHARGE TEMPERATURES AS AFFECTED BY ENGINE EXHAUST NOZZLE AREA

RUN NO.	A8 %
A	87.5
B	57.5
C	27.0

100% A8 STROKE = 212 in.^{2}
0% A8 STROKE = 88 in.^{2}

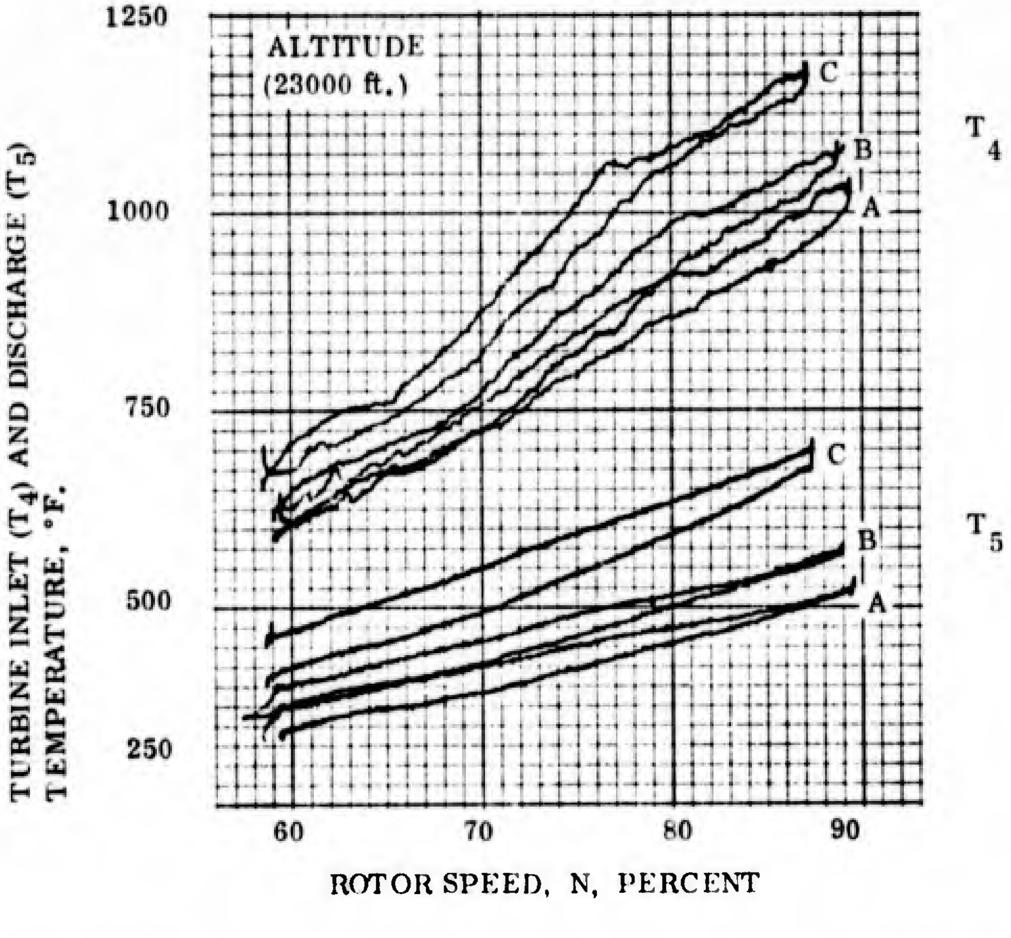

FIGURE 99. TURBINE INLET AND DISCHARGE TEMPERATURE AS AFFECTED BY ENGINE EXHAUST NOZZLE AREA

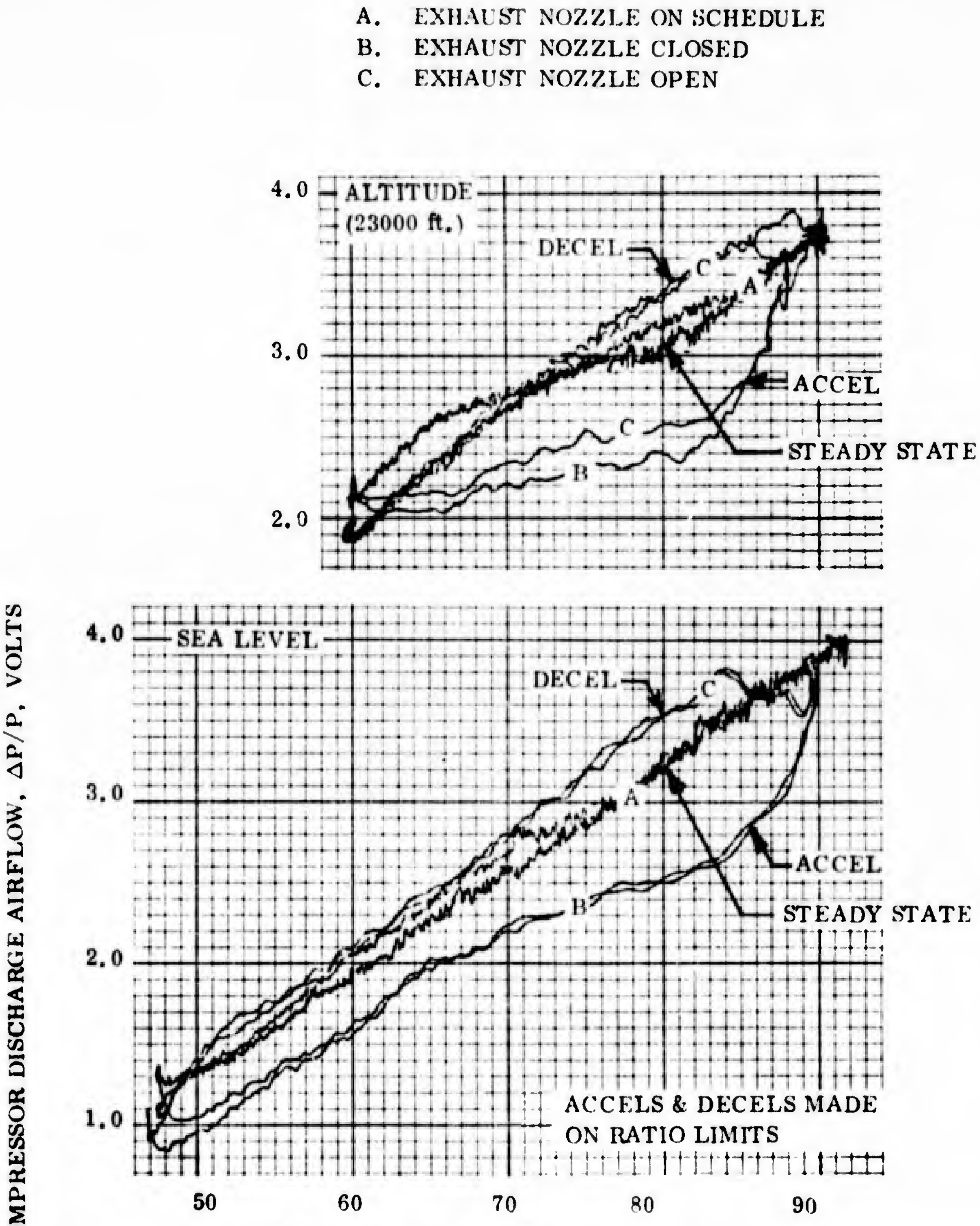

FIGURE 100. COMPRESSOR DISCHARGE AIRFLOW ΔP/P INDICATION AS AFFECTED BY ENGINE EXHAUST NOZZLE AREA

Engine Parameter	ENGINE SPEED - N - %					
	50	60	70	80	90	95
	Engine Nozzle Area		= 94.5% of stroke*			
Wf - PPH	512	556	630	760	995	1180
P_3 - PSIA	22.8	27.9	33.9	43.8	59.8	68.0
P_5 - PSIA	13.8	13.5	13.3	12.9	11.4	10.5
T_4 - °F	1050	960	928	919	1050	1180
T_5 - °F	860	750	670	629	629	660
	Engine Nozzle Area		= 46% of stroke*			
W_f - PPH			686	858	1130	1358
P_3 - PSIA			34.0	45.5	61.0	71.0
P_5 - PSIA			13.9	14.0	13.9	13.8
T_5 - °F			598	579	610	688
	Engine Nozzle Area		= 2.5% of stroke*			
W_f - PPH				1140	1710	2060
P_3 - PSIA				48.8	68.8	78.8
P_5 - PSIA				17.8	20.5	22.7
T_5 - °F				760	888	998

*100% stroke, $A_8 = 212 \text{ in}^2$.
0% stroke, $A_8 = 88 \text{ in}^2$.

Table 3 -- Engine Steady State Data at Sea Level

RESPONSE OF ENGINE ACTUATOR SYSTEMS

Electrohydraulic driven actuators are used to drive the metering valve, compressor bleeds, inlet guide vanes and exhaust nozzle area request. The fundamental gains and response of all the actuators are represented functionally in block diagram Figure 101.

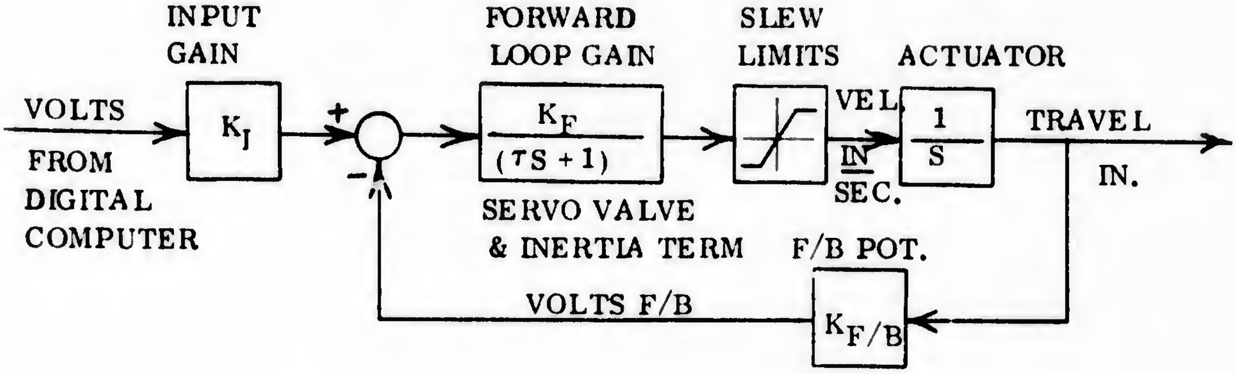

Figure 101 -- Hydraulic Actuator Block Diagram

The following table gives the response values and gains for each actuator at approximately 200 PSID.

Actuator	KI (V/V)	K F/B (V/in)	KF in/sec	Slew Limits (in/sec)	τ sec
Metering Valve	.2	5.0	24^V	2.5	.0033
Bleeds	1.0	2.5	7.5	2.0	.002
IGV's	1.0	2.5	5.0	1.0	.003
A_8 Req.	1.0	5.0	7.5	2.5	.002

The relationship from metering valve feedback volts to fuel flow are the following:

$$WF = -1700 (V_{F/B} + .22) \text{ PPH}$$

The metering valve capacity (1.0 in. stroke) and gain are 8,130 PPH and 8,500 PPH/in. respectively. Frequency response tests from metering valve position to fuel flow was made to determine the fuel flow bypass response. The results showed second order dynamics with a damping ratio and break frequency of 0.20 and 20 hertz respectively.. The effective slew rate of the bypass was tested to be 30,000 PPH per second.

The engine exhaust nozzle actuator receives its input from the nozzle request actuator and is driven at a rate proportional to engine speed. Block Diagram, Figure 102, describes the nozzle actuator system. A given actuator error is required to engage and disengage the actuator clutch.

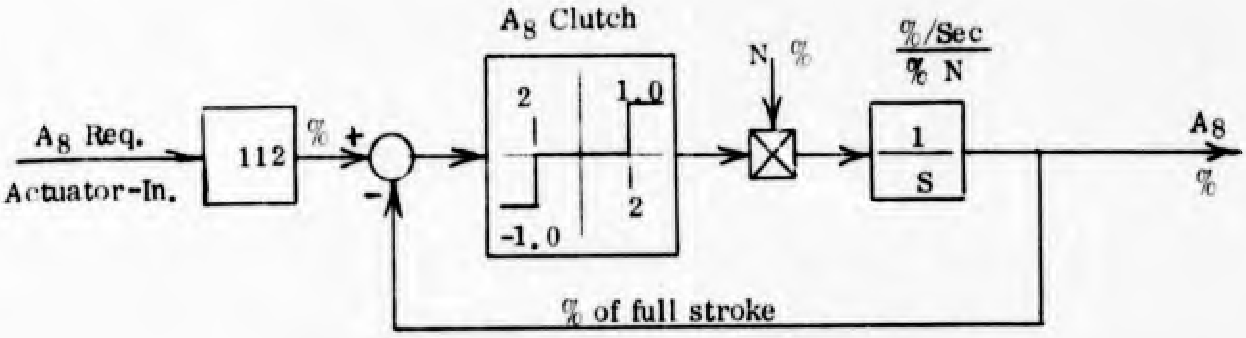

100% full stroke = 212 in^2.
0% full stroke - 88 in^2.

Figure 102 -- Engine Exhaust Nozzle Actuator

SYSTEM FREQUENCY RESPONSE TESTS

Frequency response tests were ran on the J85-13 engine and the J85 analog computer simulated engine by Honeywell Incorporated. See Reference 3.

SECTION VII

SUMMARY, CONCLUSIONS AND RECOMMENDATIONS

A highly versatile, research type, externally programmable control system for use in development and evaluation of new modes of control was fabricated and assembled at the Aero Propulsion Laboratory of Wright-Patterson Air Force Base, Dayton, Ohio.

SUMMARY

The system assembled includes features and equipment as listed below:

- A J85-13 engine mounted in the altitude cell of Room 21, Building 18C of the Air Force Aero Propulsion Laboratory.
- A simulation of the J85 engine on the AFAPL's Applied Dynamics AD/Five Analog Computer.
- Programs for the IBM 1800 digital computer to control the engine and the simulated engine.
- Electronic equipment to complete circuits between the digital computer, engine mounted equipment and the simulated engine.
- Electronic circuits for communication with the digital computer.
- Engine mounted sensors, fuel control and actuators and electronic conversion and control circuits.

The system assembled and computer control programs developed allowed for the following types of engine control for ground level and altitude:

- Start fuel flow schedule,
- Fuel flow schedules bounding the safe operating region of the engine,

- Proportional burner pressure limiting,
- Proportional and proportional plus integral turbine temperature control,
- Proportional and proportional plus integral engine speed control,
- Engine speed request rate for acceleration control,
- Speed rate of change control,
- Compressor discharge air flow control,
- Mechanical overspeed governor,
- Compressor geometry controls, and
- Exhaust nozzle control.

Control loops contained a sufficient number of adjustments to demonstrate effects of request settings and gain adjustments. Also combinations of control loops and transfer from one loop to another during transients were demonstrated. These controls were discussed in Section V.

Control demonstrations were contained within the engine specification fuel flow boundaries. Further, most engine testing was performed between 50 and 90 percent speed. The engine has many bosses welded on to the case for instrumentation. During tests with the J85-7, several cracks developed at welded areas. Since the system performance and operation could be demonstrated without excessively stressing the engine, the pseudo range of operation was observed.

CONCLUSIONS

The system including the analog computer with the simulated engine, the IBM 1800 digital computer programs, the engine mounted equipment, and the interface electronic circuits fulfills the goals of the program. The system is flexible, reliable, externally programmable and useful as a control development and evaluation tool. Many types of engine control loops were demonstrated. Sufficient engine running was accomplished to demonstrate flexibility and repeatability of the system.

- Use of the IBM 1800 to develop and test control systems for jet engines was demonstrated quite successfully. The ability to make schedule and gain changes in the control while the engine and control system were under test showed the great flexibility provided. Also, being able to quickly and safely call in any one of several control loops to test while the engine was running also demonstrates the flexibility of the test system.

- The engine simulation was most useful in the test program. Characteristics of the engine were fairly well represented. Numerical values of variables were within a few percent of values obtained during engine running. More accurate steady state schedules could be used in the simulation. Dynamic behavior of the simulated engine was fairly representative of the engine. Advantages of testing with the simulated engine included:

    1. New digital control programs were easily and safely checked and evaluated while varifying the digital programming accuracy.

    2. Engine and control system operating characteristics were obtained.

    3. Nominal control schedules and gains were established. Control settings which proved to be satisfactory by simulation also proved to be satisfactory during engine running.

- Many engine control loops were demonstrated during the test program. Results of the tests are discussed in Section V. Successful and useful engine control and flexibility of the system were demonstrated during tests utilizing the following techniques:

    1. Acceleration and deceleration of the engine at ground level and altitude were demonstrated by use of fuel-burner pressure schedules with speed and inlet temperature. This or a similar type of control has been used

on most turbine engines. Utilizing the schedule as a boundary of operation appeared to be a most desirable feature of control.

Closed loop control of engine variables may be desirable or necessary during steady state but, there are problems if the boundary schedule is ignored during accelerations. For example, compressor discharge pressure has a relatively low gain with fuel at low rotor speed. Excess fuel flow could easily be obtained if the fuel control relied on burner pressure only. Compressor discharge air flow parameter also had a low gain at low speed. Burner temperature is a double function with fuel. That is, it is possible to decrease the temperature if enough fuel is available. A similar condition can exist with temperature averaging and some flame area is extinquished by rich blowout.

2. Rate limited speed request was demonstrated. The throttle request was input to the control as a step. This step started an integration of the request which was used for control. Very slow accelerations and decelerations with this technique provides a method of examining control and engine behavior. Also, the technique removes the variable rate obtained by slow manual power requests.

   Rapid requests are useful in examining control actuation at scheduled values of variables. When a limit is encountered and the rotor speed lags behind the request, the rate becomes ineffective during the remainder of the transient.

3. Proportional controls of burner pressure, temperature and rotor speed were successfully demonstrated. Transition from ratios schedule to temperature, pressure or speed control was accomplished smoothly by use of selected circuits.

4. Proportional plus integral controls of speed, temperature and compressor discharge airflow were successfully demonstrated. The speed was used with the temperature control. The speed control was used with the ratios'boundary. The temperature and airflow controls were used with a proportional speed control.

   These proportional plus integral controls require significant test and adjustment of gains to obtain smooth transition from one loop to another.

RECOMMENDATIONS

As a result of experience gained in demonstrating the system,and the value of system as demonstrated, it is recommended that extension of the capability should be incorporated for current and future activities at AFAPL.

- The simulation program should be revised to better reflect engine operation as occurs in the cell. Data is now available to program the analog for sea level and altitude. Only sea level is included in the current program and schedule adjustments would be required for altitude. The controls reported here include altitude provisions, and they are, thus, compensated for changes in intake pressure.

  The installed engine is self-aspirating. Engine discharge pressure decreases as rotor speed increases. During altitude operation the intake is throttled to obtain an altitude equivalent at a given speed,and the exhaust pressure is set at a pressure to correspond to the inlet altitude. At lower speeds, altitude decreases at the intake and increases slightly at the discharge.

  Although any satisfactory engine control should perform well with these conditions, a simulation program to reflect these characteristics should be considered. The simulation would be more useful in evaluation of controls.

- System requirements should be re-evaluated with respect to current objectives. Revisions and/or additions may be desired for use in the next few years. Design objectives of the system were set forth three years ago. Many parts of the system have been used for two years. Some changes may be desired for convenience and some changes may be desired to meet requirements of more recent project planning. The evaluation should include:

    1. Consideration of control for engines other than the J85-13,
    2. Use of and communication with other digital computers,
    3. Methods of/or simulation of other engines, and
    4. Additions to the interface for sensing variables and control of geometry not required by the J85 test programs.

REFERENCES

1. AFAPL-TR-71-78, Electronic Engine Control Utilizing Compressor Exit Conditions For Acceleration Control, by S. E. Arnett, The Bendix Corporation Energy Controls Division, November 1971.

2. AFAPL-TR-72-72, Turbine Engine Compressor Flow Limiting by S. E. Arnett, The Bendix Corporation Energy Controls Division, August 1972.

3. Contract No. F33615-72-C-2190, Project No. 3066, Turbine Engine Control Synthesis (Optimal Control), Issued to Honeywell Inc. - Systems & Research Center, Research Department, July 1972.