AD-A032 210 ROYAL AIRCRAFT ESTABLISHMENT FARNBOROUGH (ENGLAND) F/G 9/1
A TEST FACILITY FOR THE CALIBRATION OF PRESSURE AND ACCELERATIO--ETC(U)
MAR 76 J S WHITALL

UNCLASSIFIED RAE-TR-75151 DRIC-BR-51813 NL

1 OF 1
AD
A032210

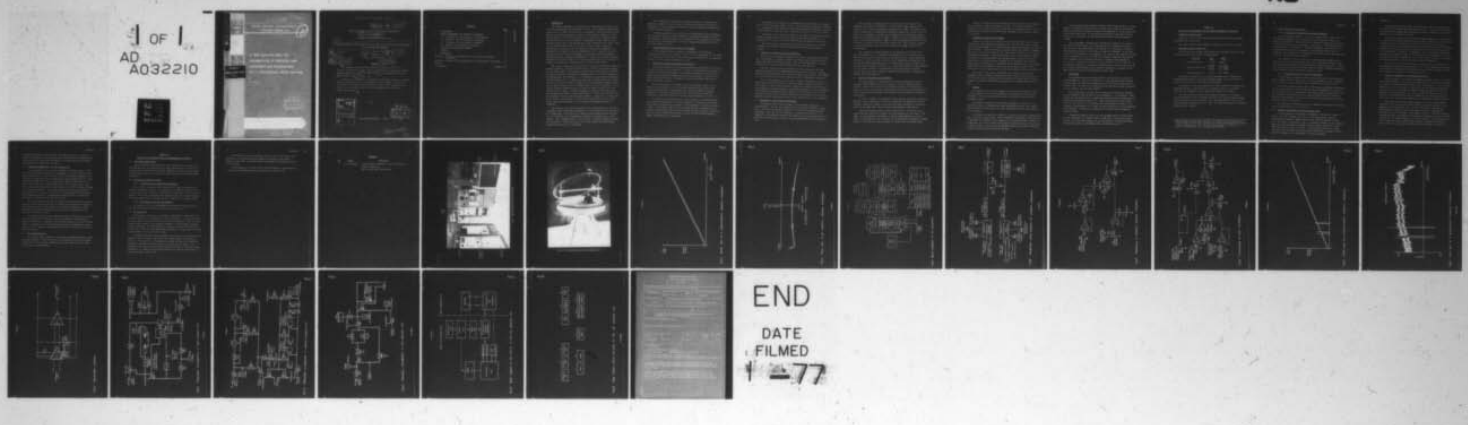

END
DATE
FILMED
1-77

AD A032210

TR 75151

MARCH

1976

© Crown Copyright 1976

COPYRIGHT ©
CONTROLLER HMSO LONDON
1976

UNLIMITED

FG

BR51813

ROYAL AIRCRAFT ESTABLISHMENT

TECHNICAL REPORT 75151

A TEST FACILITY FOR THE CALIBRATION OF PRESSURE AND ACCELERATION TRANSDUCERS BY A CONTINUOUS SWEEP METHOD

by

J. S. Whitall

DDC
RECEIVED
NOV 4 1976
D

PROCUREMENT EXECUTIVE, MINISTRY OF DEFENCE
FARNBOROUGH, HANTS

UNLIMITED

UDC 621.317.39 : 621.3.089.6 : 621.317.2

14 RAE-TR-75151

ROYAL AIRCRAFT ESTABLISHMENT

9 Technical Report 75151

Received for printing 19 December 1975

6

A TEST FACILITY FOR THE CALIBRATION OF PRESSURE AND ACCELERATION TRANSDUCERS BY A CONTINUOUS SWEEP METHOD

by

10 J. S. Whitall

11 Mar 76

18 DRIC

19 BR-51813

12 33p.

SUMMARY

The equipment described enables quick and accurate calibration of absolute, differential and gauge pressure transducers with range maxima between 350Pa and 35MPa (0.05 lb/in^2 and 5000 lb/in^2) and accelerometers with range maxima between 1.0g_n and 100g_n.

SQIN SUBIN SUBN SQIN

Both types of transducer are calibrated by subjecting them and an accurate reference transducer to a continuous sweep of input parameter. Graphs are drawn by an X-Y recorder of either the direct output of the transducer under test or its output suitably processed to show departures from the ideal nominal linear output.

ACCESSION for
NTIS White Section ☑
DDC Buff Section ☐
UNANNOUNCED ☐
JUSTIFICATION
BY
DISTRIBUTION/AVAILABILITY CODES
Dist. AVAIL. and/or SPECIAL
A

1

DDC
RECEIVED
NOV 4 1976
D

Departmental Reference: IT 148

310450

LB

CONTENTS

		Page
1	INTRODUCTION	3
2	GENERAL ARRANGEMENT AND OPERATION OF EQUIPMENT	4
	2.1 Equipment for calibrating pressure transducers	4
	2.2 Method of calibrating pressure transducers	5
	2.3 Equipment for calibrating accelerometers	5
	2.4 Method of calibrating accelerometers	6
3	DISCUSSION OF SOME TYPICAL RECORDS	7
4	ACCURACY	7
5	CONCLUSIONS	8
Appendix A	Details of the equipment used for pressure transducer calibrations	9
Appendix B	Details of the equipment used for accelerometer calibrations	13
Reference		15
Illustrations		Figures 1-16

C013041-013042

1 INTRODUCTION

The testing, adjustment and calibration of transducers for aerospace use, both during development and production, is often a very lengthy process and can account for up to about half the cost of a transducer. The usual point by point methods of calibration require the output of the transducer under test (hereafter referred to as the test transducer) to be recorded at a number of known discrete levels of the input parameter. Measurements by these methods often minimise or miss some of the imperfections of the transducer and it takes a long time to calibrate and process the results in order to assess linearity, repeatability, hysteresis, zero and sensitivity changes with temperature etc. Although the time taken to quantify imperfections can be reduced by means of a computer, there are distinct advantages in providing a continuous graphical presentation of the transducer performance. For this reason the semi-automatic equipment illustrated in Figs.1 and 2 has been developed for the calibration of pressure and acceleration transducers by a continuous sweep method.

The design is based on that of an earlier facility[1] which catered only for pressure transducers and which required the use of oil as the pressure medium for the higher ranges. The equipment described here offers greater flexibility and ease of operation and enables the maximum amount of accurate information to be obtained about the performance of a transducer with the minimum expenditure of time and hence cost. It employs the principle of subjecting the test transducer and an accurate reference transducer to the same steadily changing variation of input parameter over the complete range of the test transducer. An X-Y plotter provides a permanent record of either the direct output of the test transducer or its output, suitably processed in relation to the reference to show its departures from a nominal linear output. In both cases the X-axis of the recorder is driven by the reference transducer. Examples of a 'direct' plot and an 'error' plot are given in Figs.3 and 4 respectively, the latter form being a particularly powerful aid in revealing and diagnosing faults in a transducer.

The equipment can be quickly matched to the characteristics of the test transducer by setting switches according to its input range and its nominal output voltage swing. After the type of presentation required has been selected the test transducer and the appropriate reference are subjected to a steady change of input parameter whilst a record is made. Steadily changing pressures are provided by a controlled supply of dry clean nitrogen gas and changing accelerations by means of a centrifuge.

The calibration of differential pressure transducers is carried out by applying a pressure to its two ports in turn with the other port left open to atmosphere. It is not possible at present to test a differential transducer at various reference pressures.

Pressure transducers can be calibrated at temperatures other than ambient by placing them within a modified commercial environmental chamber installed in the equipment. Accelerometers can be calibrated at other temperatures by mounting them on the centrifuge inside a thermally lagged container which has been previously heated or cooled.

2 GENERAL ARRANGEMENT AND OPERATION OF EQUIPMENT

A block diagram showing the general arrangement of the equipment illustrated in Figs.1 and 2 is given in Fig.5. A brief description of the system and its method of use follows but for more detailed information of the equipment reference should be made to Appendices A and B.

2.1 Equipment for calibrating pressure transducers

The equipment applies a slowly changing pressure simultaneously to the test transducer and an accurate reference. In order to accommodate the wide range of pressure covered by the equipment, three separate pressure units are provided which house the appropriate pneumatic circuits and references. Details of the ranges covered by the units, and ranges of reference transducer employed are shown in the table of Fig.5.

A twin vacuum supply is coupled to the low and medium pressure units to provide a vacuum reference for the reference transducer and to enable test pressures below ambient to be generated when calibrating absolute pressure transducers. The vacuum supply must also be used when testing gauge and differential transducers with the low pressure unit (Appendix A, section A.6).

All ranges are calibrated with dry clean nitrogen as the pressure medium, thus avoiding contamination of the test transducer. The nitrogen is obtained from a bank of cylinders and is supplied to the equipment at a nominal pressure of 4MPa. In the high pressure unit the nitrogen pressure is boosted by a compressed air driven pump, and for safety reasons, this unit contains a protective steel box, with suitable interlocks on its door, to house the environmental chamber containing the test transducer.

The output of the reference is standardised in the pressure unit and then fed to the recording unit where the rest of the transducer processing is carried out. A simplified block diagram of the processing circuits is shown in Fig.6 and further details of these are given in Appendix A, section A.3 and Figs.7 and 8.

The X-axis of the recorder is driven by the output of the reference and the Y-axis can display either the direct output of the test transducer or the difference in the outputs of the test and reference transducers (error plot).

The recording unit also contains adjustable dual supplies for the test transducer and a digital voltmeter for general monitoring and adjustment purposes.

2.2 Method of calibrating pressure transducers

With the test transducer pneumatically coupled to the appropriate pressure unit, the equipment is adjusted to match its pressure range and nominal full scale output swing by setting switches. The type of presentation, i.e. direct or error plot, is also selected together with the scale required.

The test transducer and the reference are then subjected to the same variation of pressure at an approximately uniform rate over the full working range of the test transducer, and a graph is drawn by the recorder. The method of controlling the gas pressure in the three units is explained in Appendix A.

In all three pressure units the rate of change of pressure is operator controlled and must be restricted to suit the limited frequency response of the X-Y recorder. It must also be limited to ensure that, despite any difference in pipe lengths and transducer volumes, the pressure applied to the test transducer does not appreciably lag behind that applied to the reference. With the test transducer connecting pipes normally used a cycle time of about two minutes is adequate to produce an accurate record of the characteristics of the transducer.

2.3 Equipment for calibrating accelerometers

A centrifuge table is used to apply a slowly changing acceleration simultaneously to the test accelerometer and a good quality reference accelerometer. The method is basically similar to that used in calibrating pressure transducers. Thus the same recording unit, as described in section 2.1, is employed for processing and recording the outputs of the test accelerometer and reference to provide either a direct or error presentation of the calibration curve.

The centrifuge, designed and built in RAE, has an electrically driven aluminium alloy table of 1m diameter. It will subject items weighing up to 7.5kg (16 lb) to steadily changing accelerations up to $100g_n$. The speed of the table is measured by a counter/timer (Appendix B, section B.3) and the radius at which the accelerometer is mounted can be measured by a travelling microscope temporarily positioned across the table as shown in Fig.2. The centrifuge speed control and measuring equipment, together with the processing electronics of the reference, are housed in the centrifuge control unit. This unit also contains an oscilloscope which allows the user to monitor the dynamic output of the accelerometer.

The reference is normally mounted on the same side of the table as the test accelerometer but at a different radius such that it is exercised over a substantial part of its range during the calibration cycle. Before commencing a sequence of tests, the table is run at the two speeds which correspond to the test accelerometer being subjected to its range limits and the reference output is standardised accordingly (section 2.4). Since the reference is thus standardised the radius at which it is mounted need not be known and its absolute accuracy need not be high. However it must have good linearity, low hysteresis and good short term stability.

2.4 Method of calibrating accelerometers

The test transducer is usually mounted on the centrifuge table inside a thermally lagged chamber which can be heated or cooled if required before a calibration cycle is carried out. The chamber is located on the table by two dowels so that it can be quickly remounted accurately in the two positions which will enable the test transducer to be subjected to either positive or negative acceleration.

In order to simplify the adjustment of the reference transducer processing amplifier, when calibrating bi-directional transducers the mounting of the test transducer within the chamber is such that the centre of gravity of its moving mass is at the same radius for both positive and negative accelerations.

After the centrifuge table has been balanced it is first run at the two speeds which are calculated to subject the test transducer to the limits of its range. By the appropriate adjustment of the two potentiometers of a circuit similar to that shown in Fig.7 the output of the reference is processed to change from 0 to -10 volts as the test transducer is cycled over its working range.

During a calibration cycle the speed of the centrifuge is varied manually and a cycle time of about two minutes is normal. As the test transducer is exercised over its working range its output and the standardised output of the reference are processed and recorded by the recording unit to produce a direct or error plot.

3 DISCUSSION OF SOME TYPICAL RECORDS

Fig.9 is a direct plot and Fig.10 an error plot calibration of a pressure transducer of the wirewound potentiometer type. The error plot clearly shows the wire to wire movement of the wiper and any excessive unevenness of the winding is revealed. Since the pressure is changing slowly and steadily throughout the cycle, the hysteresis shown will be 'worst case' and will not be partially concealed as may happen in calibrations made by point by point methods. Both plots show the two regions where the instrument gives a faulty output which could be due to insufficient wiper pressure or the insulation not adequately removed from the winding wire. Calibration points obtained using a dead weight tester have been superimposed on Fig.10 and the position of these points is such that the faulty regions might not have been noticed during this calibration.

Fig.4 shows an error plot calibration of an inductive type pressure transducer which illustrates a discontinuity which might not be revealed by a point by point method. Although the error within the working range is small it indicates a premature limiting of the output due to a wrongly positioned end stop.

4 ACCURACY

The technique used in this equipment is both rapid and extremely helpful in fault diagnosis but its accuracy depends on the quality of the reference transducers, their continued stability, and the accuracy of the electrical processing circuits.

The pressure references, as explained in Appendix A, section A.2, are regularly checked and the magnitude of any adjustments required are recorded. The accelerometer references are in effect standardised for the calibration of every transducer.

As indicated in Appendix A, section A.3, accurate and stable components are used in the processing circuits. Hence a minimum of adjustment is required, and a high degree of confidence can be placed in the results recorded. However it is important that circuit functions are regularly checked and to facilitate this a digital voltmeter is built into the equipment which can be readily connected to various monitor points by means of switches.

The four higher range pressure references have now been used for a large number of calibrations and experience has shown that if they are checked and reset at six monthly intervals the required re-adjustment is not more than 0.2% and is usually much less. If absolute accuracies better than about 0.3% are required it is advisable that the reference used should have been recently checked.

Most accelerometer manufacturers indicate the position of the centre of gravity of the moving mass of the transducer within a guaranteed tolerance. The accuracy of any calibration of a transducer on a centrifuge is limited by this uncertainty relative to the radius at which it is mounted. At the start of any set of calibrations on a transducer, the output of the reference accelerometer is normalised to 0 to -10 volts over the speed range which subjects the test transducer to accelerations covering its complete range (Appendix B, section B.3). Although the accuracy of this adjustment can be as good as 0.1% the overall accuracy of a continuous calibration plot is further limited by the non-linearity and hysteresis of the reference transducers at present in use. These limit the best accuracy obtainable to about 0.25%.

5 CONCLUSIONS

The equipment described has been used very successfully to assist with the development of a number of transducers. It has also been used to assess different types of commercial transducers and to re-calibrate transducers for various users. The objective of obtaining fuller and more accurate information in a much shorter time has been achieved.

Each calibration cycle takes about two minutes and provides a permanent detailed graphical representation of the performance of the transducer. These records are extremely helpful in diagnosing faults and quickly establishing the magnitude of performance limitations. Ideally manufacturers should provide curves of this type with each transducer and the equipment described is very suitable for this purpose. It is fast and easily adjusted to suit the characteristics required. Furthermore in production it could be used by relatively unskilled labour.

Although the absolute accuracy of this equipment may not be good enough for the calibration of transducers used in some areas of work such as wind tunnels, it is more than adequate for the vast majority of applications where the overall accuracy of measurement need be no better than ±1%.

Appendix A

DETAILS OF THE EQUIPMENT USED FOR PRESSURE TRANSDUCER CALIBRATION

A.1 Transducer power supplies

These are a pair of stable power supplies which can be finely adjusted individually up to ±30 volts.

The current drawn by the transducer is metered and can be up to 1 amp.

A.2 Reference pressure transducers

The five reference pressure transducers which are made by CEC are of the force balance type and have the following ranges.

Situation	Type	Range
Low pressure unit	4-333	±3.5kPa
Medium pressure unit	4-336	0 to 35kPa
	4-331	0 to 350kPa
	4-331	0 to 3.5MPa
High pressure unit	4-334	0 to 35MPa.

The zeros and sensitivities of these instruments must be checked and adjusted when necessary to give their standard outputs of +10.153 volts* full scale (±10.153 volts for the differential reference).

The output for zero applied pressure is easily checked and adjusted and is regularly monitored. The sensitivity is checked at least at six monthly intervals and the magnitude of any adjustment required is recorded.

With the exception of the ±3.5kPa range the references are normally calibrated against a Texas Instruments Ltd. Model 145 precision pressure gauge with its appropriate bourdon capsule. Over the range 35kPa to 3.5MPa, a CEC primary pressure standard may also be used. The ±3.5kPa reference is calibrated against a water manometer.

---

* This equipment was originally designed to calibrate pressure transducers in terms of Imperial units and in practice the reference transducers are adjusted to give an output of 10 volts when they are subjected to a pressure of 0.05×10^n lb/in^2 where n is the appropriate integer.

A.3 Electronic processing circuits

A.3.1 Processing of the reference pressure transducer

A block diagram of network 1 of Fig.6 is shown in Fig.7. The output of the reference transducer is fed via buffer A_1 to a unity gain inverter A_2. Except when using the ±3.5kPa reference, the inverter is taken out of circuit by a relay which also reverses the pneumatic connections to a differential test transducer when it is subjected to 'negative' pressures. With switch SW1 and potentiometers RV1 and RV2 set according to the pressure range of the test transducer, as the pressure is varied between the limits of its range the output of A_4 will vary between 0 and -10 volts.

With reference to Fig.7, where each of the operational amplifiers is as shown in Fig.11, the fixed resistors which control the gain are Welwyn Vishay ultra precision grade metal film type 4802 with an initial tolerance of ±0.01%. Potentiometers RV1 and RV2 are 10kΩ Muirhead four decade precision potentiometer boxes type D801-D with an adjustment tolerance of ±0.1%.

A.3.2 Processing of the test pressure transducer

A block diagram of networks 2 and 3 of Fig.6, which are in the recording unit, is shown in Fig.8. The output of the test transducer is fed to A_5 which acts as a buffer with a gain which can be switched to 1, 10, 100 or 1000.

Switch SW7 and potentiometers RV3 and RV4 are set according to the nominal output voltage range of the test transducer after multiplication by the gain of A_5. Thus as the input to A_5 moves over the nominal output voltage range of the test transducer the output of A_7 will change accurately from 0 to +10 volts. The type of presentation is selected by switch SW5 and the required sensitivity along the Y-axis is set by RV5.

The operational amplifiers and passive components in Fig.8 are of the same types as those described in section A.3.1.

A.4 Pneumatic arrangement in the high pressure unit

A block diagram of the pneumatic arrangement in this unit is shown in Fig.12. The test transducer is coupled to the system inside a Montford Instruments environmental chamber which has been suitably modified to allow this. To protect the operator in case of a mechanical failure of the transducer under test, the environmental chamber is housed within a box made of ¼ inch steel plate which is inside this unit. Access into this box is via a steel plate door which has mechanical and electrical interlocks to prevent it being open whilst pressure is being applied to the test transducer.

The laboratory nitrogen supply can be boosted to 38MPa by a gas booster pump driven from a 600kPa compressed air supply line. In practice it is boosted to just above the maximum working pressure of the test transducer to avoid the possibility of an accidental overload.

The boosted nitrogen gas is stored in an 18ml accumulator A_1 and then fed, at a rate which is controlled manually by the needle valve NV1, to the reference transducer and via the solenoid valve SV3 to the positive port of the test transducer. With a fixed setting of NV1 the rate of pressure rise will decrease exponentially and hence NV1 must be adjusted from time to time. The pressure is released via NV1 through SV1 to atmosphere. For a differential transducer, pressure is then applied via SV4 to the other port of the transducer, the first port being left open to atmosphere. At the same time the inverter A2 is removed from the signal path for the output of the reference transducer.

The direction of change of pressure is controlled by two switches which are designated 'increase'-'decrease' and '+'-'-'. These switches control relays which operate the appropriate solenoid pressure valves and also make the necessary changes in the electrical processing circuits.

A.5 Pneumatic arrangement in the medium pressure unit

A block diagram of the pneumatic arrangement is given in Fig.13. Nitrogen gas at 4MPa is reduced by the main controlling valve CV1 to provide a pressure just above the maximum working pressure of the test transducer. When the 3.5MPa reference is in use the pressure is fed to the test and reference transducers from the outlet of CV1 but when the 350kPa or 35kPa references are used the pressure is further reduced by one or two divide-by-ten reducing valves (PD1 and PD2). The divide-by-ten valves are standard spring controlled reducing valves which have been specially modified to accomplish the dividing function.

Manual control of the gas pressure applied to the test and reference transducers is by means of NV1 and two switches in a similar manner to that employed in the high pressure unit. In this unit however, when absolute transducers are calibrated, two vacuum pumps situated in a separate unit (section A.7) must be connected to the pneumatic circuit. One pump is used to evacuate the reference chambers of the reference transducers, and the other for reducing the test pressure applied to the test transducer, and also the positive port of the reference when inputs below atmospheric pressure are required. Preset relief valves RV1, RV2, RV3, RV4 and RV5 are included to protect the

reference transducers from an overload. The 35kPa reference is further protected by differential pressure switches DPS1 and DPS2 which de-energise SV13. This protection is particularly necessary when calibrating absolute pressure transducers with a range less than 35kPa.

A.6 Pneumatic arrangement in the low pressure unit

A block diagram of the pneumatic arrangement is given in Fig.14. There are two main differences between the arrangement in this unit and that in the medium pressure unit. First, in order to avoid the continual changing of the metering valve when calibrating differential or gauge transducers, the 'target pressures' towards which the test transducer is taken are well outside its range. This means that a fixed setting of NV1 (NV2 is preset nearly closed for use when calibrating absolute transducers) will result in a nearly constant rate of change of pressure. The target pressures are a nitrogen pressure of about 35kPa set by reducing valve CV1 and a vacuum generated by vacuum pump 1. This arrangement results in an approximately equal time for increasing and decreasing excursions with the same setting of NV1.

The second difference is that the solenoid valves which control the gas flow are actuated via logic circuits controlled by push buttons in conjunction with signals derived from the output of the reference transducer. A block diagram of the control arrangement is given in Fig.15 and the push button functions are shown in Fig.16.

The push buttons house green lamps which light when the button is pressed and remain alight until either the command is cancelled by an alternative command, the function is completed, or an overload signal or the 'clear' button cancels all commands. Some of the buttons also house red lamps which light to indicate that the command is prohibited and will not be carried out or an overload has occurred.

A.7 Twin vacuum pump unit

This separate unit contains two vacuum pumps together with control valves and pressure gauges. Relief valves have been included so that when the pumps are switched off they operate automatically to ensure that oil is not drawn into the rest of the equipment.

Appendix B

DETAILS OF THE EQUIPMENT USED FOR ACCELEROMETER CALIBRATIONS

B.1 Reference accelerometers

The two reference transducers which are at present used are both of the force-balance type. One with a range of $\pm 50g_n$ and an output of ±5 volts is a type 305A made by the Kistler Instrument Corporation. The other with a range of $\pm 5g_n$ and an output of ±7.5 volts is a type 4310 made by the Systron-Donner Corporation.

B.2 Electronic processing circuits

B.2.1 Processing of the reference accelerometer

This circuit is situated in the control unit of the centrifuge and is similar to that given in Fig.7. Its function is to produce an output of 0 to -10 volts as the test transducer is exercised over its range. In this case the values of RV1 and RV2 are adjusted experimentally whilst the table is running at the two speeds which will subject the test transducer to its range limits.

B.2.2 Processing of the test accelerometer

The output of the test accelerometer is processed by the same circuit as that used for pressure transducers (Appendix A, section A.3.2).

B.3 The centrifuge

The centrifuge (Fig.2) has a 1m diameter aluminium-alloy table which can be driven smoothly up to 625rev/min by a split field motor. The motor is driven by a servo speed controller built into the control unit (Fig.1). This unit also houses a power supply for the reference transducer, a counter/timer, a general purpose oscilloscope and the terminations from the slip rings which feed items on the table. There are eight multi-brush instrument slip rings rated at 0.5 amp and seven power slip rings rated at 3 amps.

The speed of the table can be measured by the output from a photocell which works in conjunction with a light source and a 4096 radially lined rotating graticule. Alternatively it is measured by a magnet attached to the rotating table and a stationary coil which gives a pulse once per revolution. The frequency of the radial lines and the period of revolution of the table are both measured by the commercial counter/timer which has an internal crystal with an accuracy of about 1 part in 10^5.

The distance of the test transducer from the centre of the table can be measured by a travelling microscope temporarily mounted to move across a diameter of the table. A vernier enables the movement of the microscope to be read to 0.01mm.

Items weighing up to 7.5kg (16 lbs) can be subjected to accelerations up to $100g_n$ and at maximum radius the acceleration is known to ±0.1%.

REFERENCE

No.	Author	Title, etc.
1	P.C. Pole-Baker	A semi-automatic equipment for the calibration of pressure transducers. RAE Technical Report 66352 (1966)

Fig.1 View of equipment excluding centrifuge

Fig.2

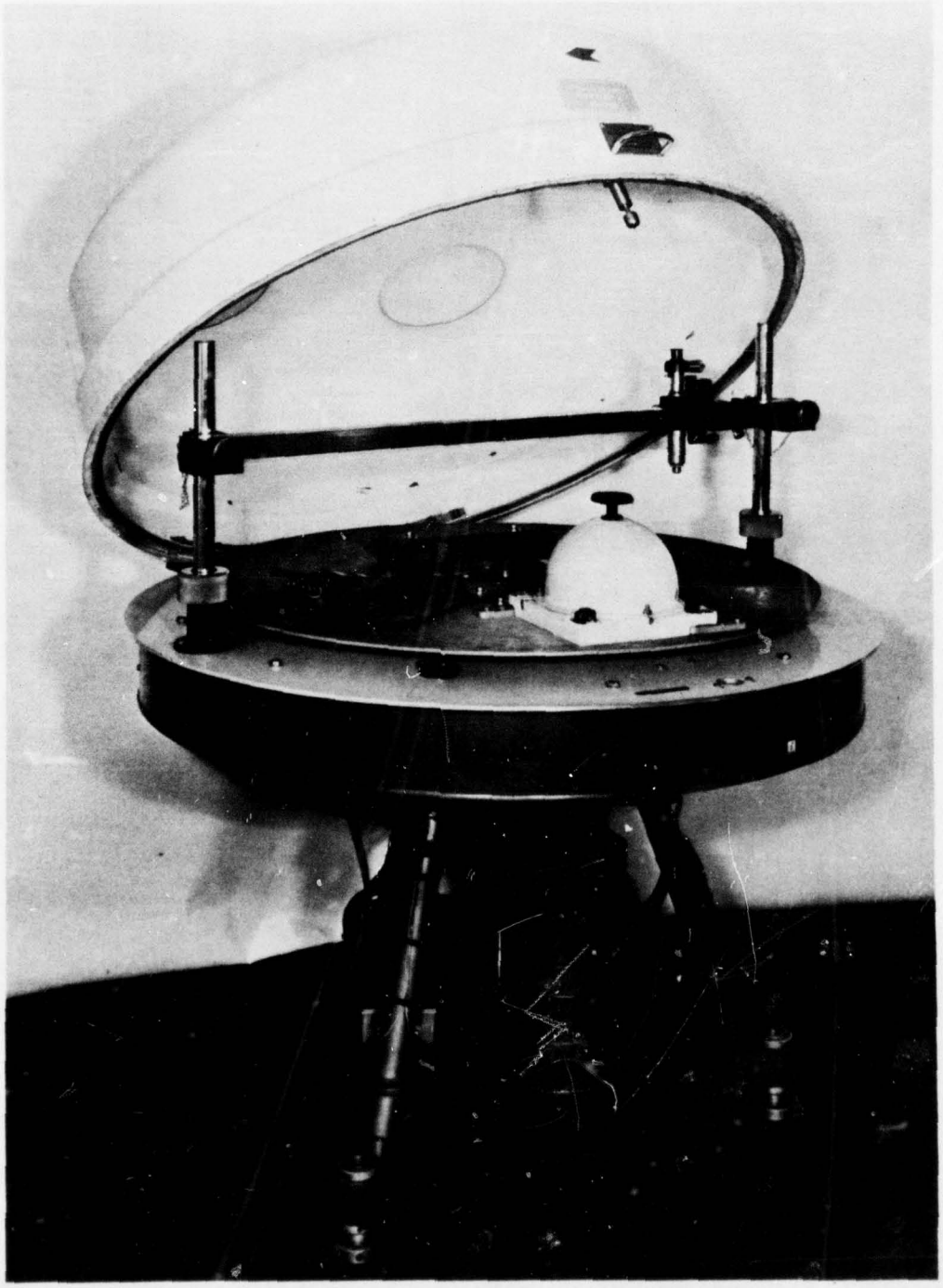

Fig.2 The centrifuge showing thermally lagged container

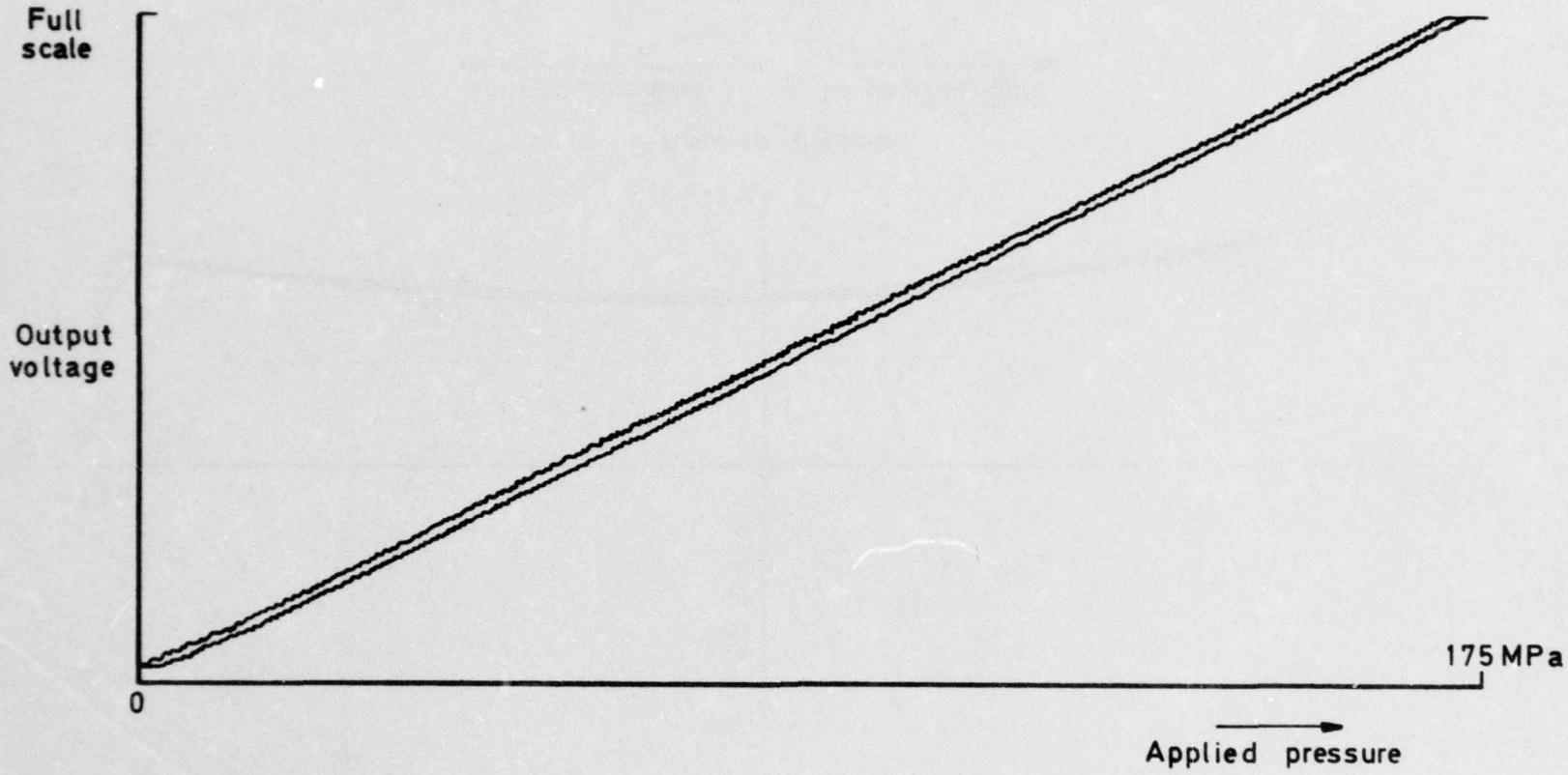

Fig.3 Direct plot of a potentiometric pressure transducer

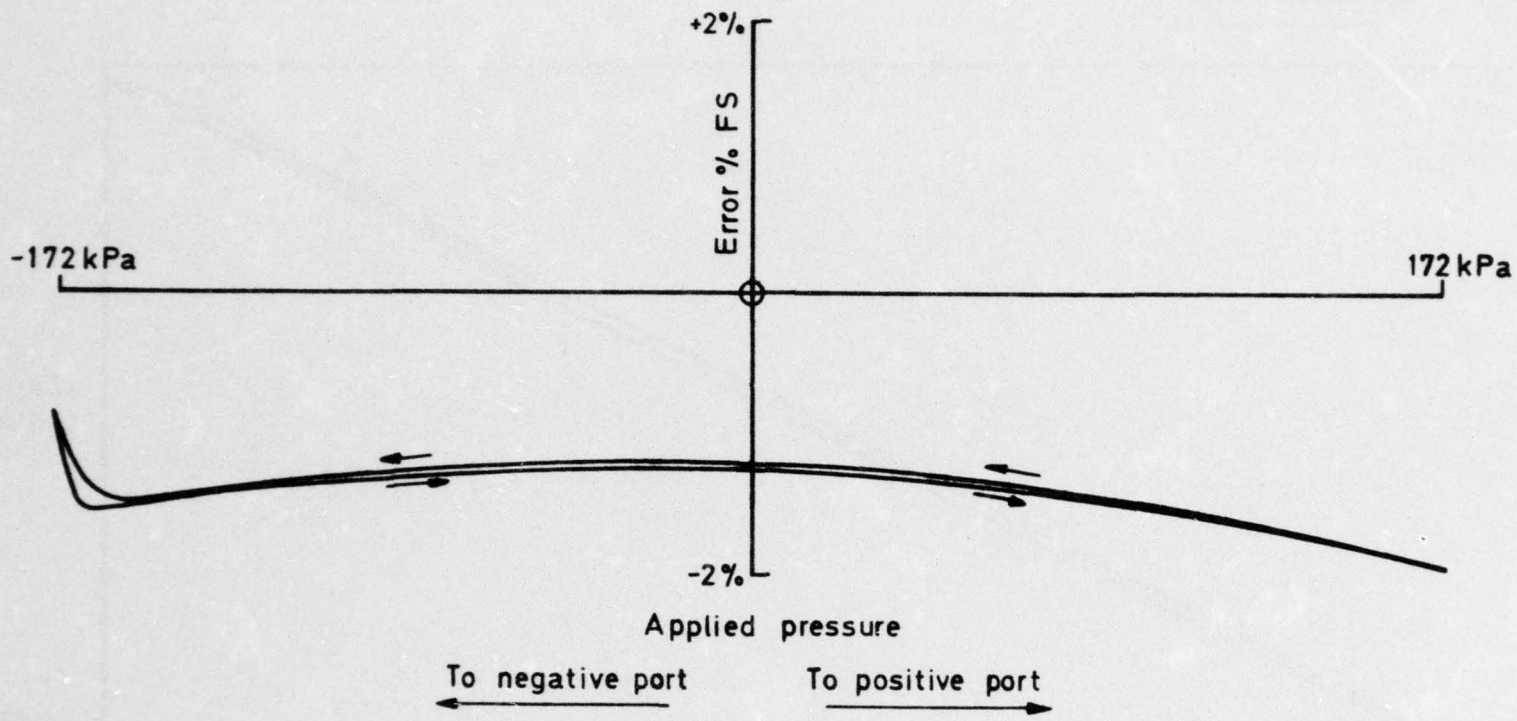

Fig. 4 Error plot of an inductive pressure transducer

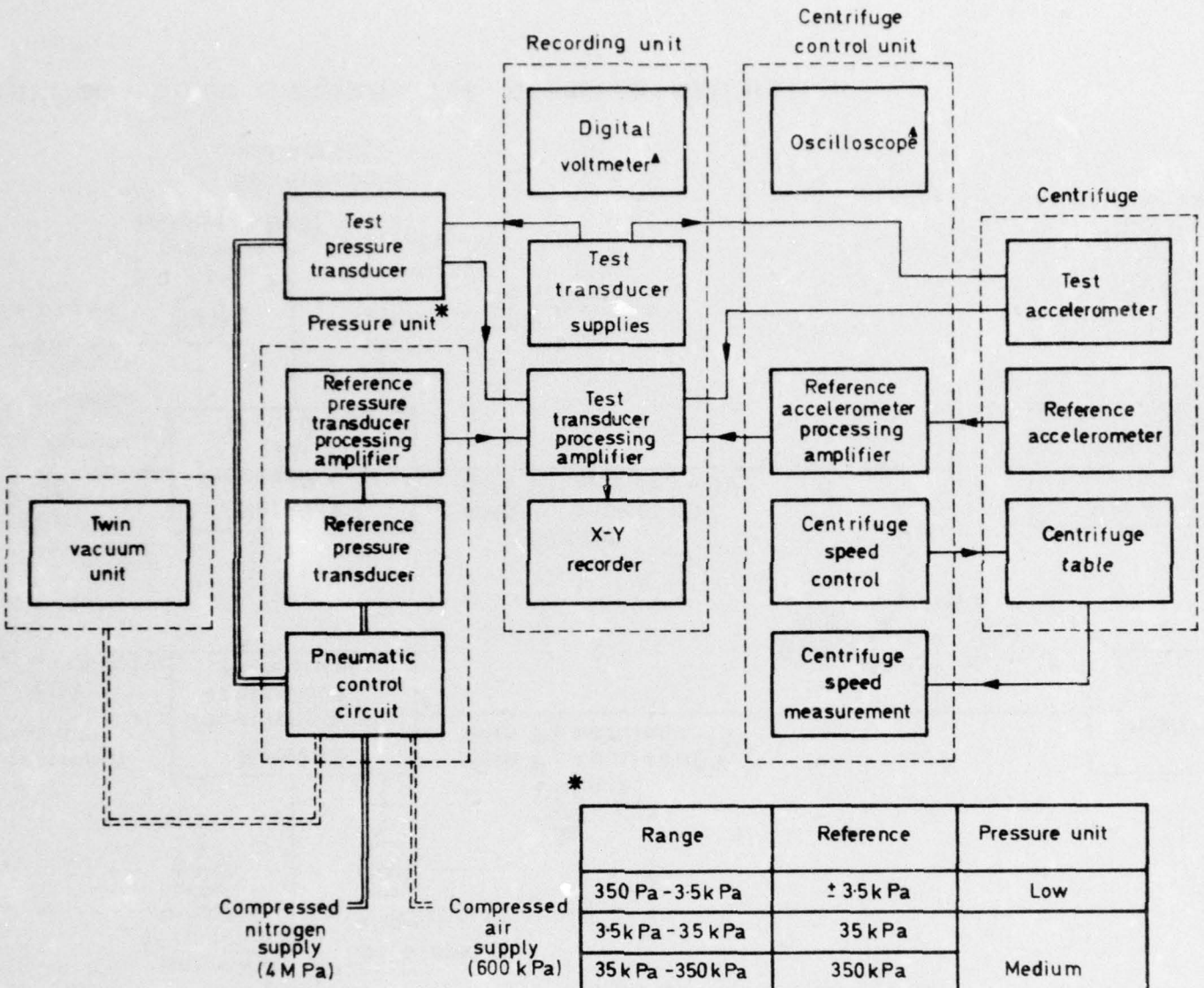

*

Range	Reference	Pressure unit
350 Pa - 3·5 k Pa	± 3·5 k Pa	Low
3·5 k Pa - 35 k Pa	35 k Pa	Medium
35 k Pa - 350 k Pa	350 k Pa	
350 k Pa - 3·5 M Pa	3·5 M Pa	
3·5 M Pa - 35 M Pa	35 M Pa	High

▲ Used for monitoring adjustment purposes

Fig.5 Block diagram of the equipment

Fig. 5

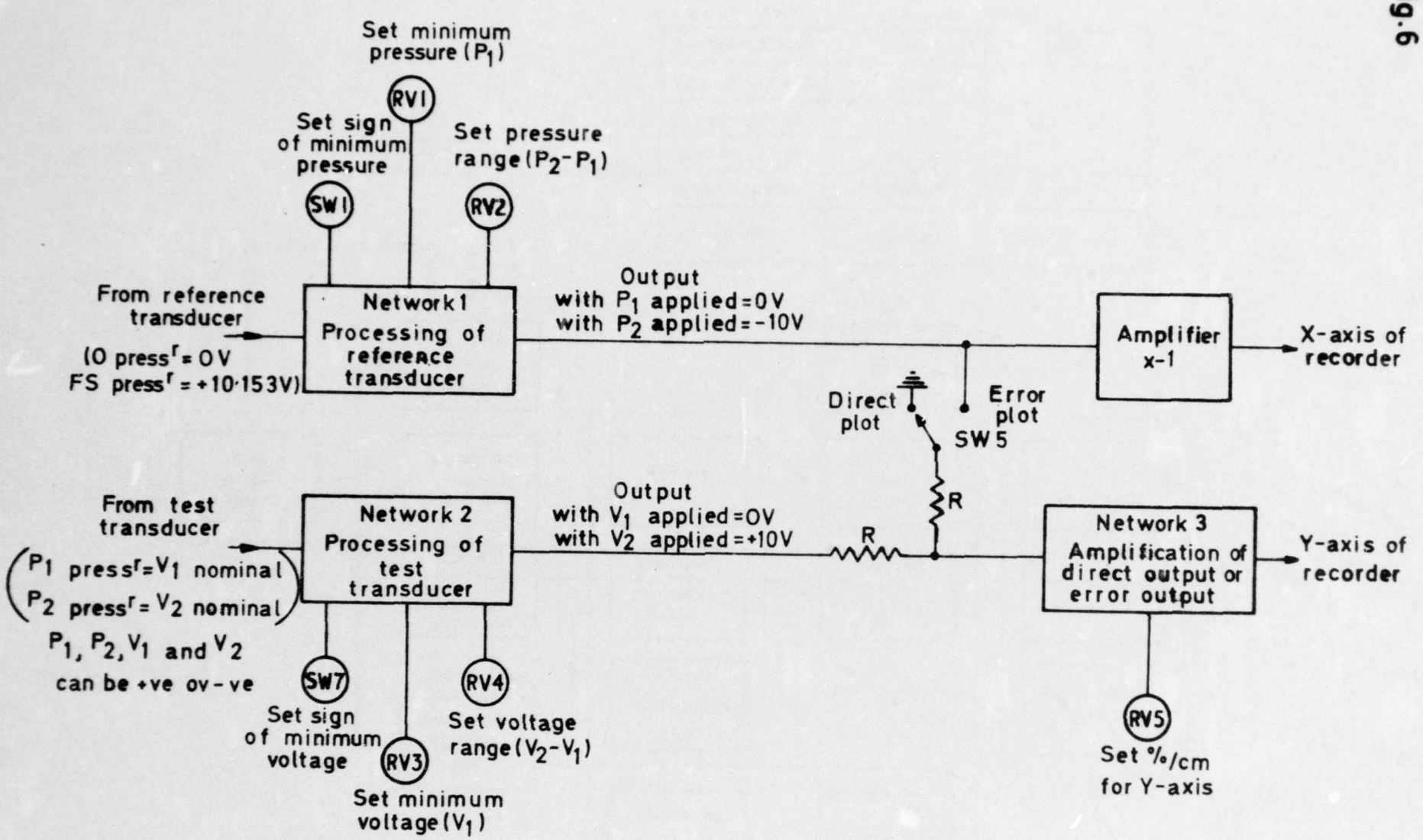

Fig.6 Simplified block diagram for pressure calibration

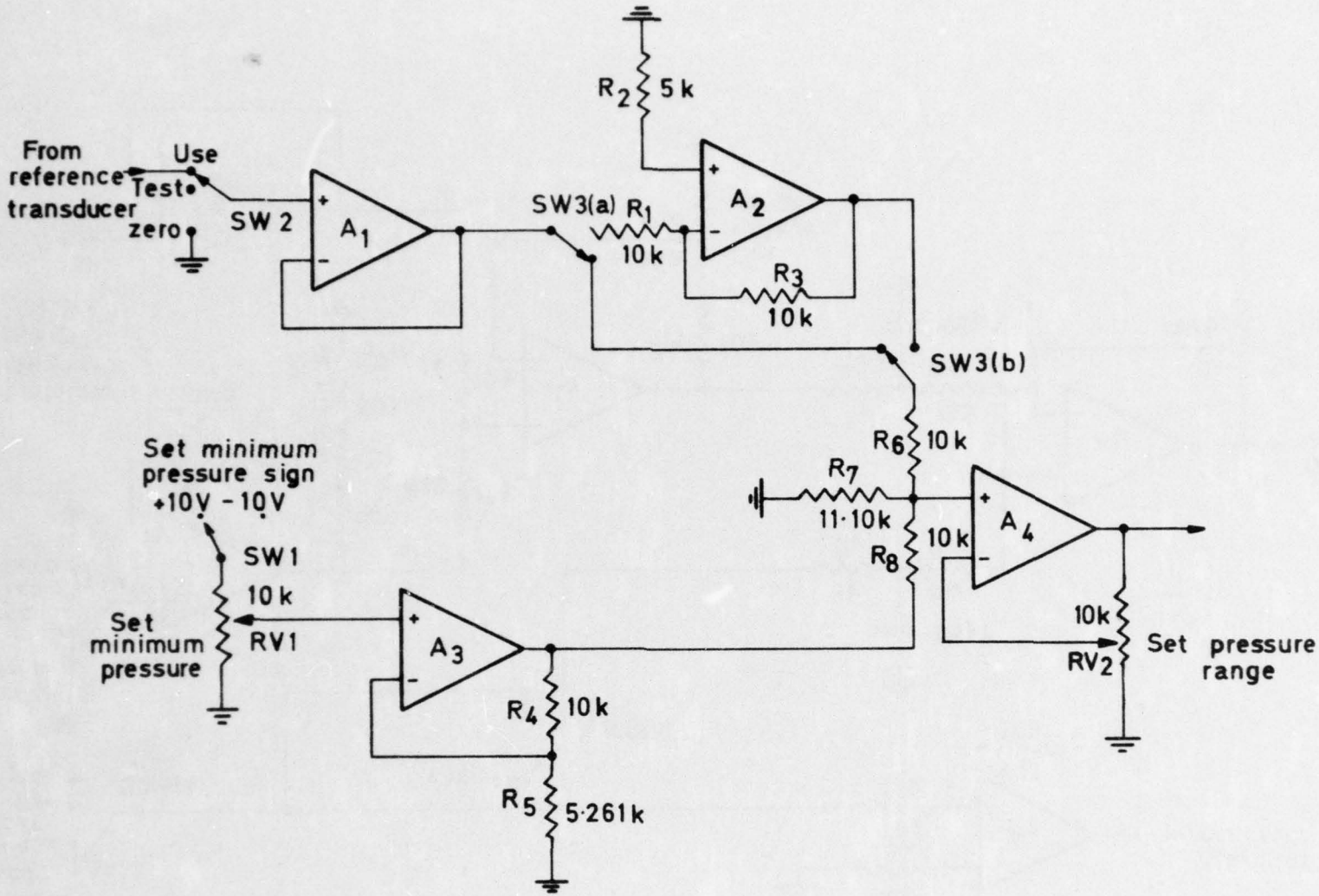

Fig.7 Processing of reference pressure transducer

Fig.7

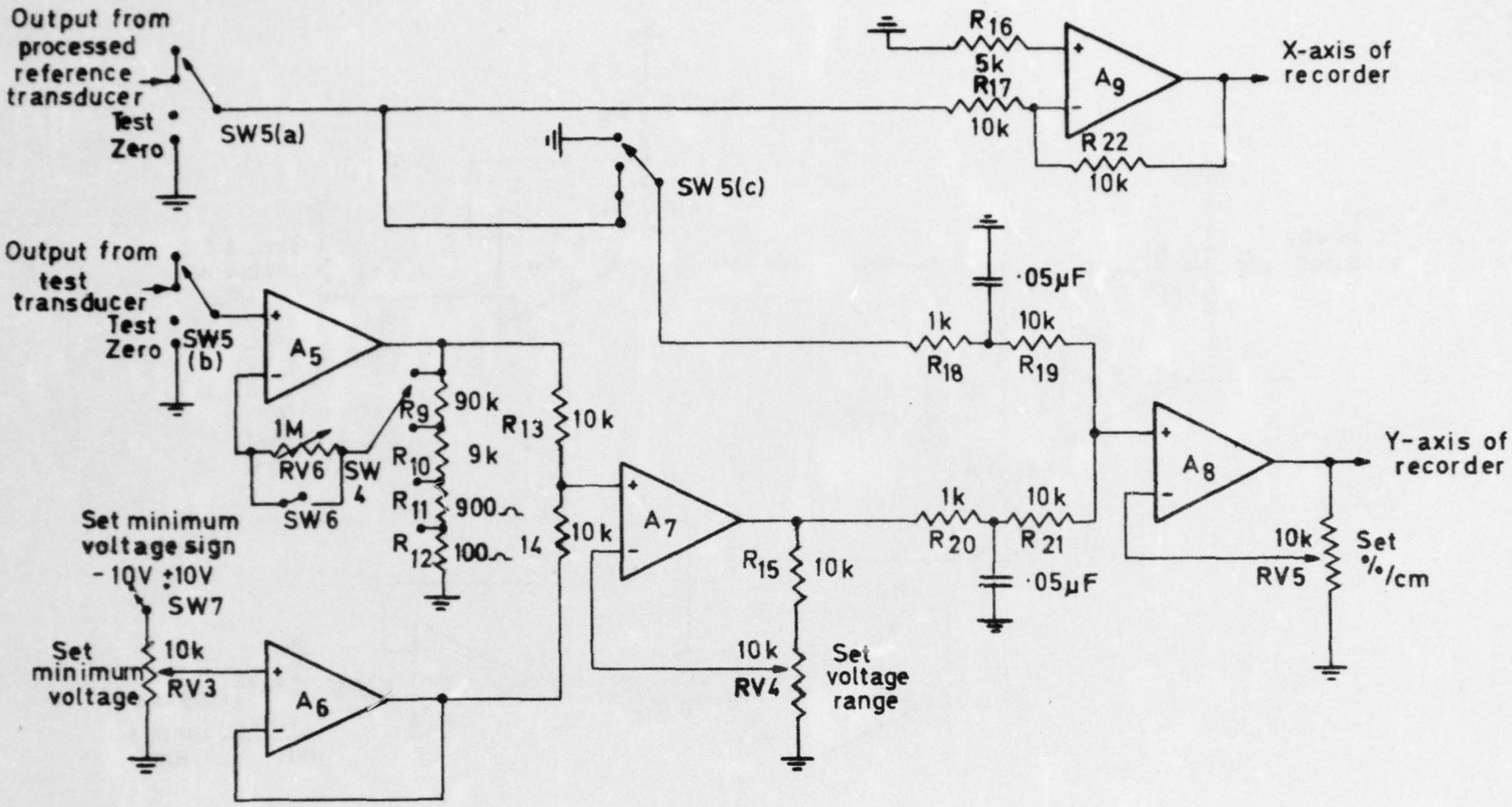

Fig.8 Processing of test transducer

TR75151

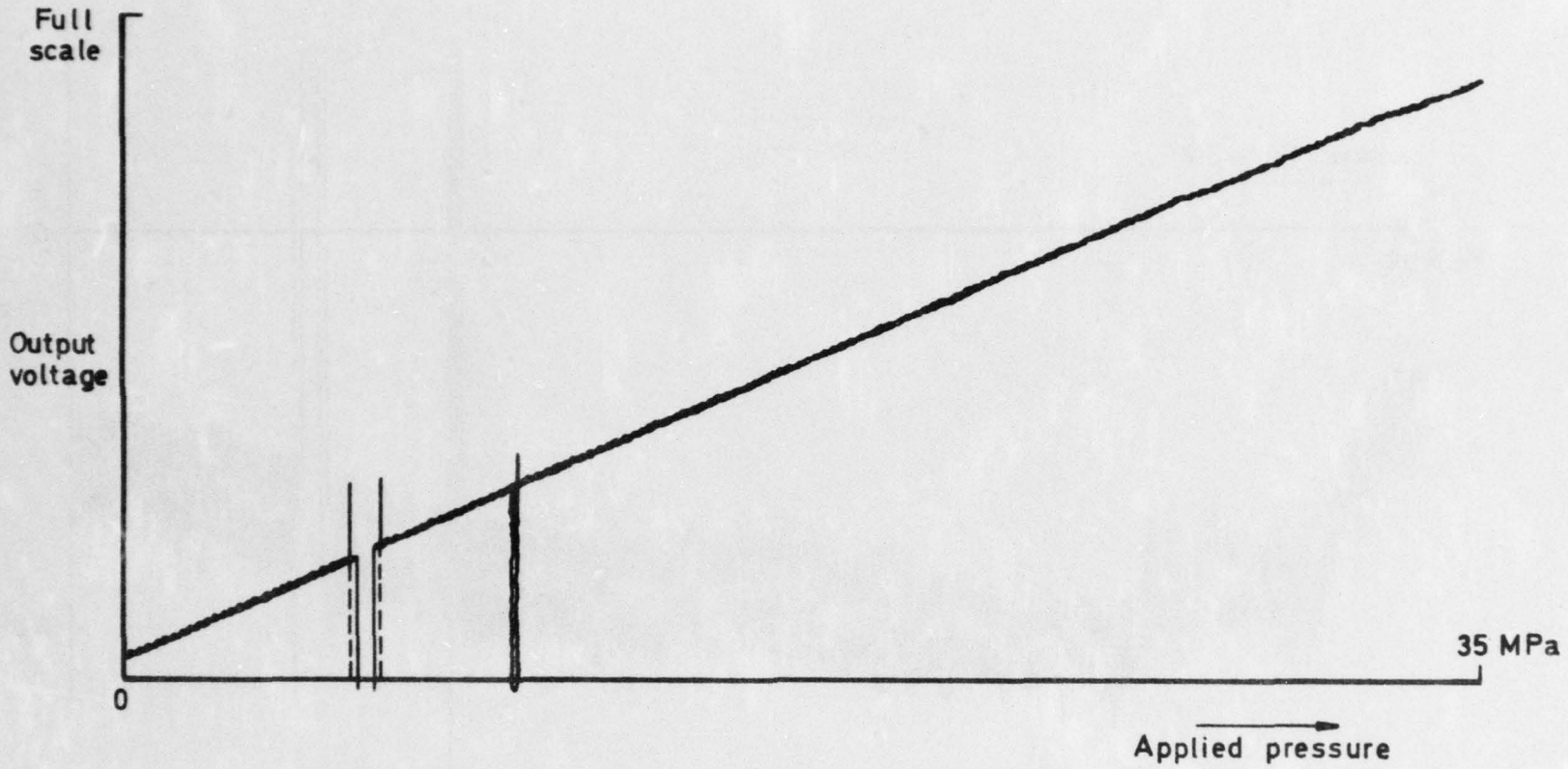

Fig.9 Direct plot of a potentiometric pressure transducer

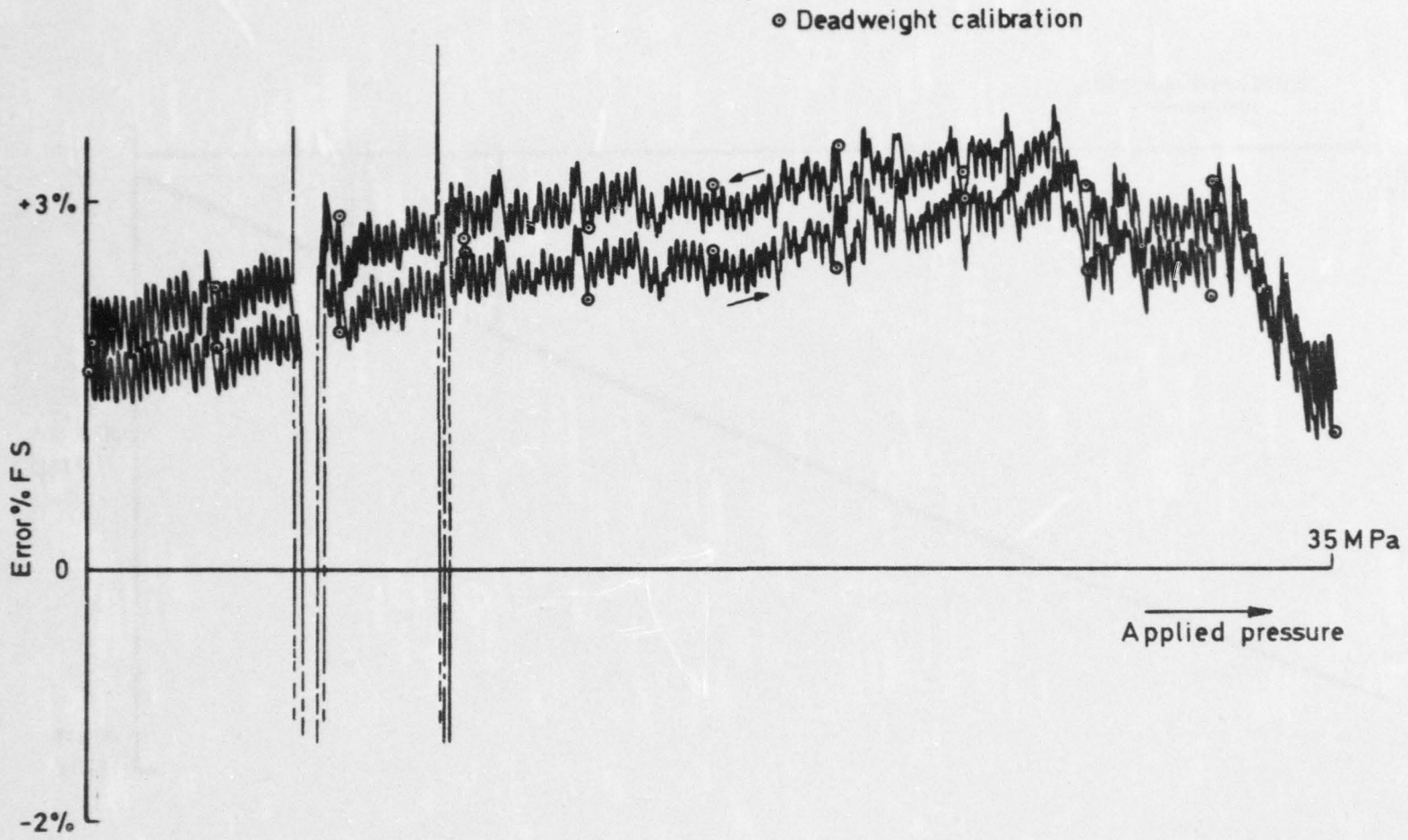

Fig.10 Error plot of a potentiometric pressure transducer

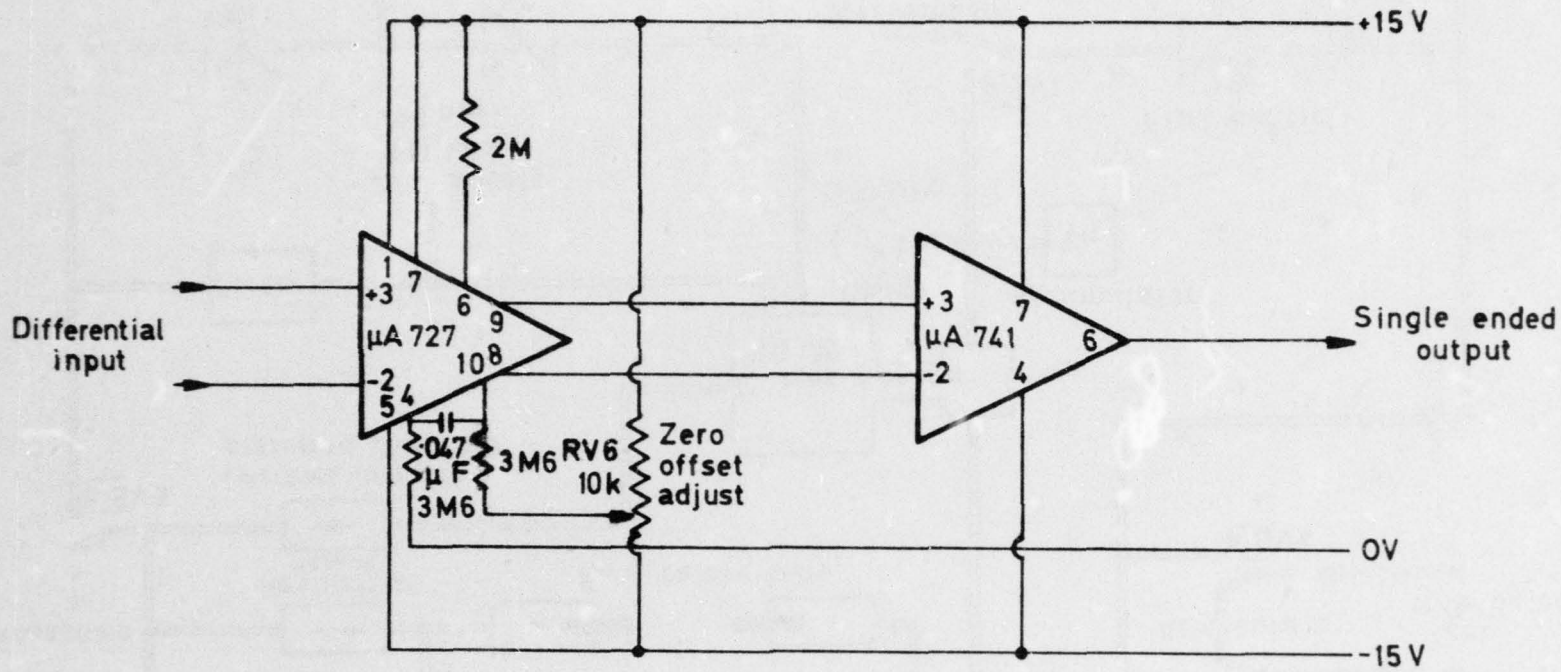

Fig.11 Operational amplifier

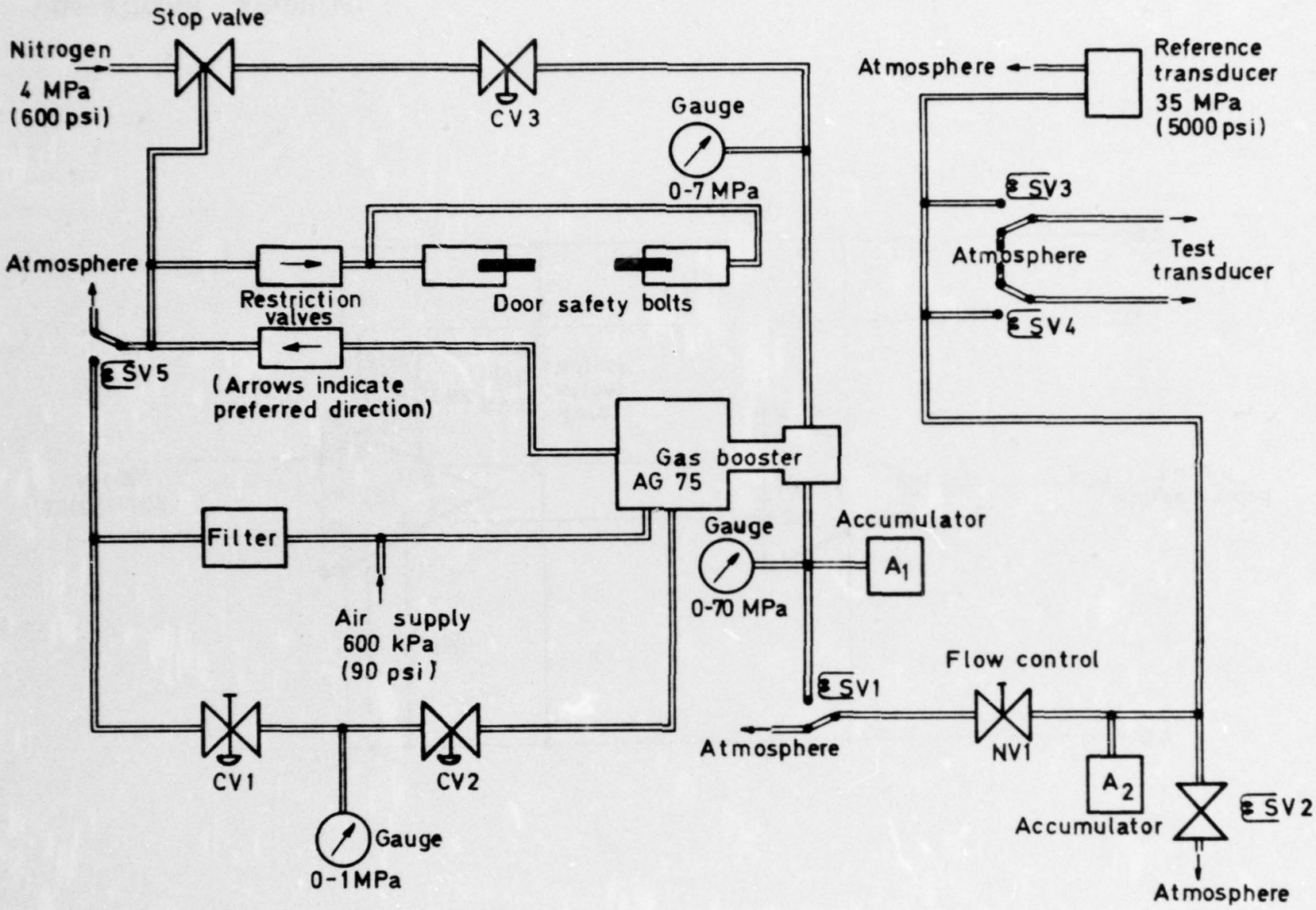

Fig.12 Pneumatic arrangement in high pressure unit

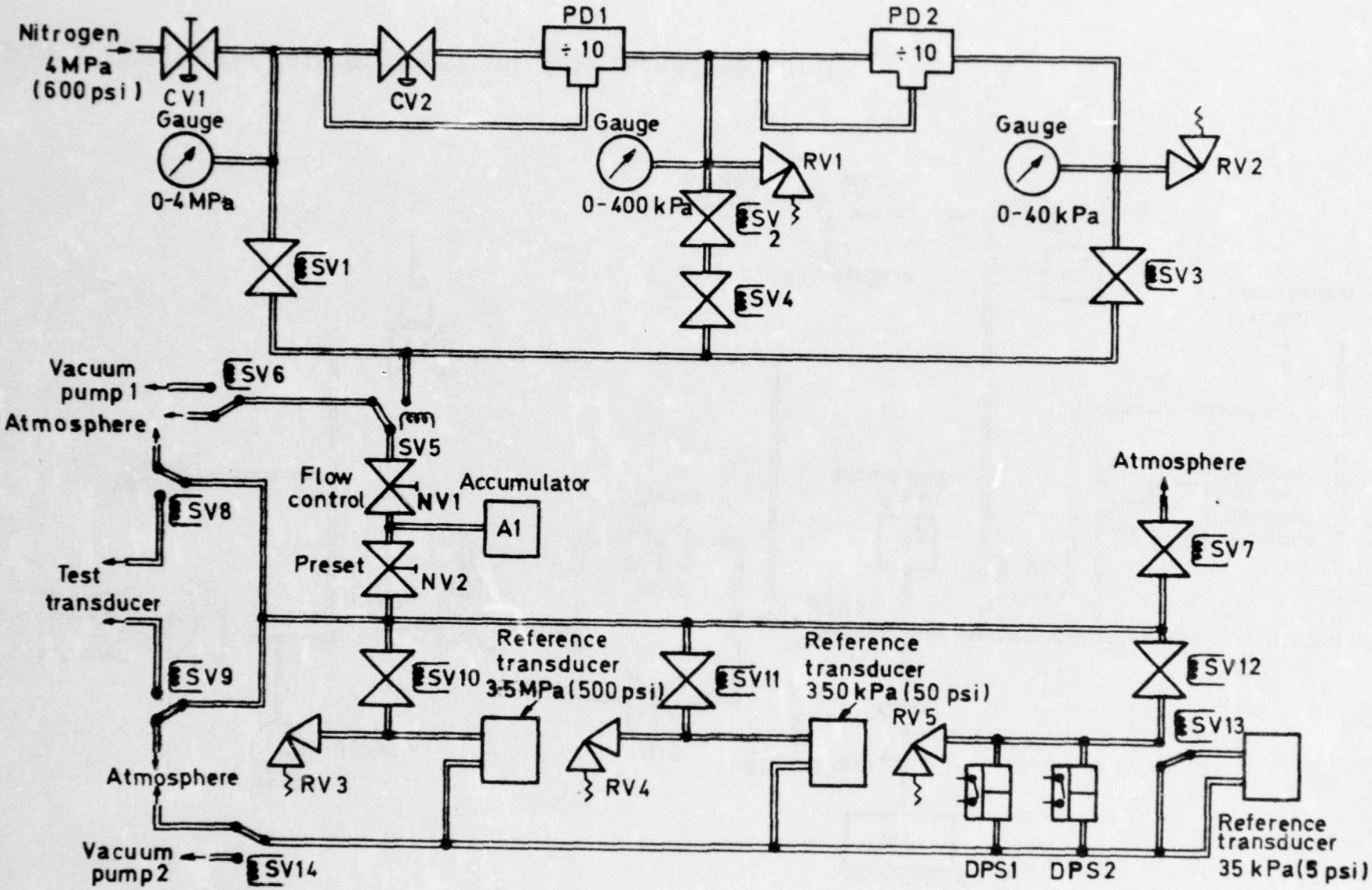

Fig.13 Pneumatic arrangement in medium pressure unit

Fig.13

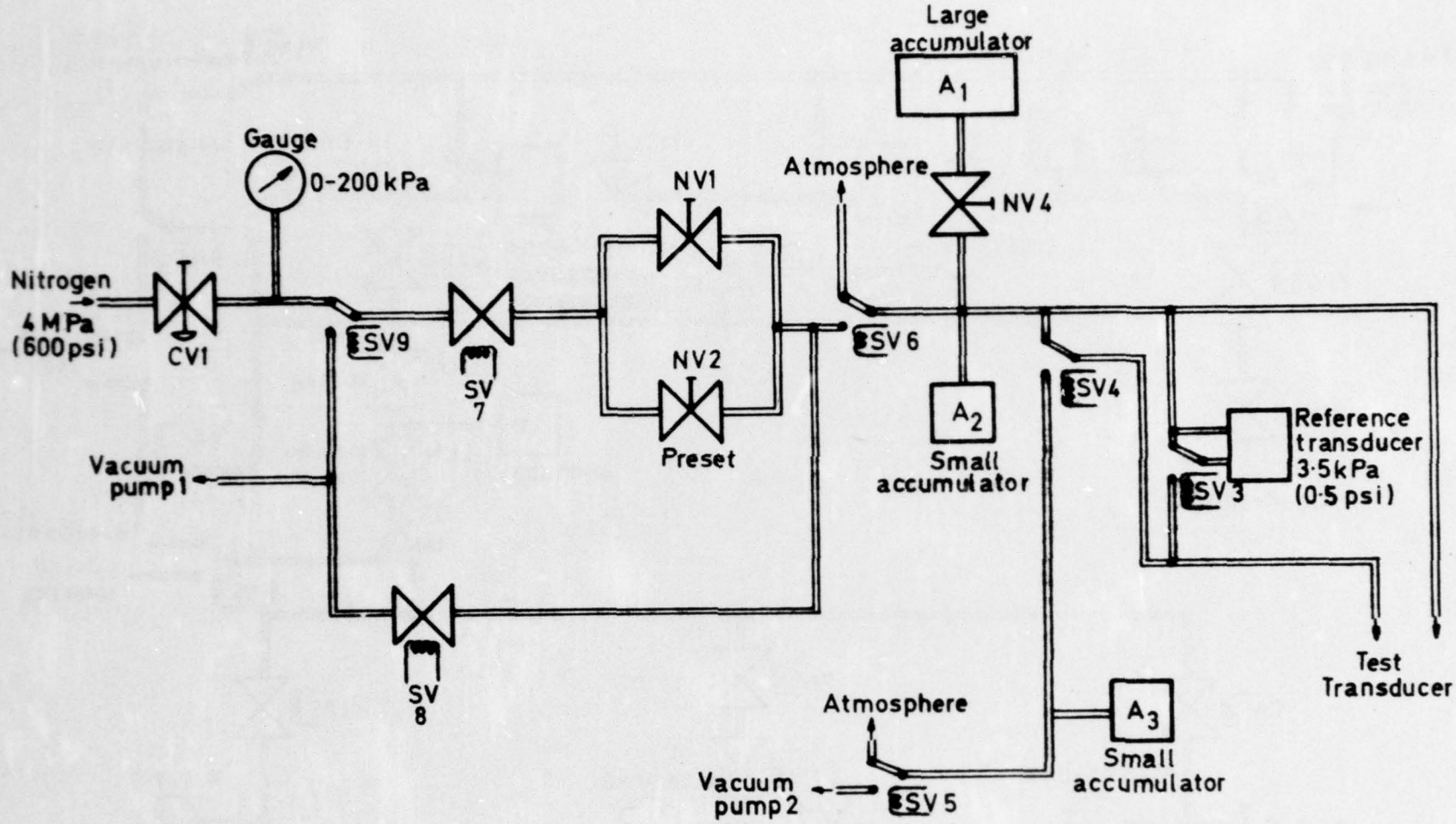

Fig.14 Pneumatic arrangement in low pressure unit

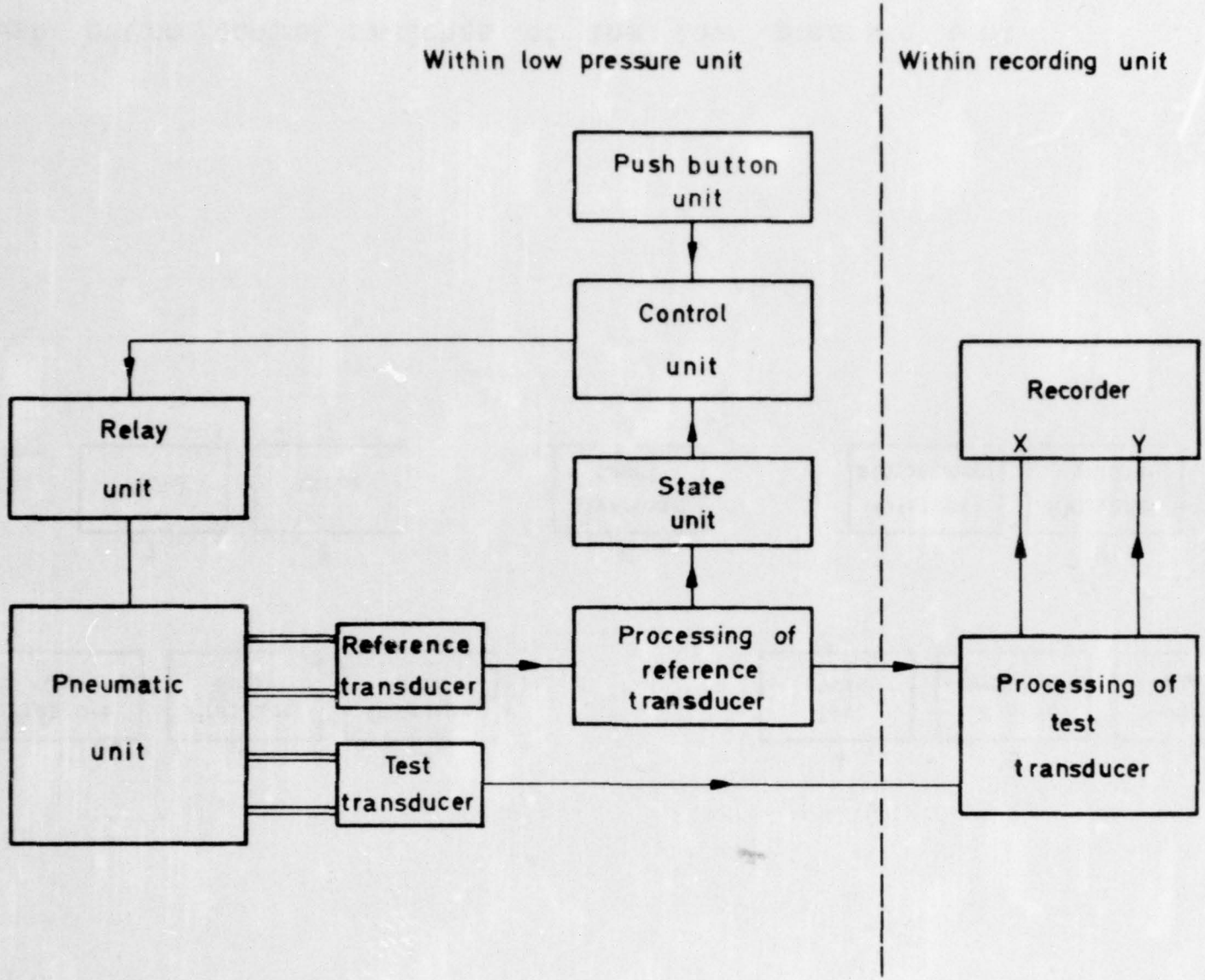

Fig.15 Block diagram of the control of the low pressure unit

Fig.15

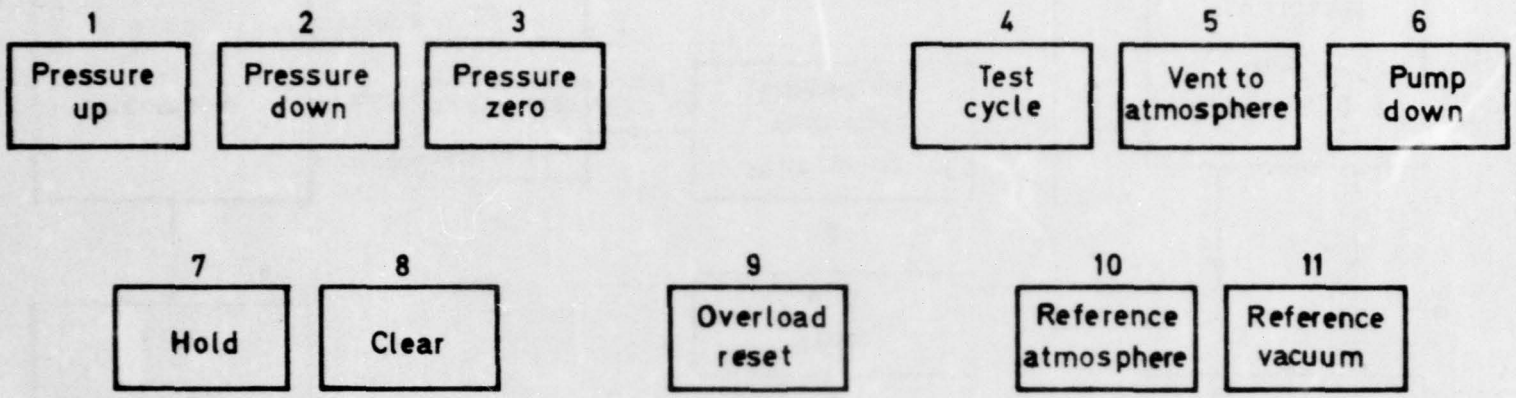

Fig.16 Push button control switches of the low pressure unit

REPORT DOCUMENTATION PAGE

Overall security classification of this page

UNLIMITED

As far as possible this page should contain only unclassified information. If it is necessary to enter classified information, the box above must be marked to indicate the classification, e.g. Restricted, Confidential or Secret.

1. DRIC Reference (to be added by DRIC)	2. Originator's Reference	3. Agency Reference	4. Report Security Classification/Marking
	RAE TR 75151	N/A	UNLIMITED

5. DRIC Code for Originator	6. Originator (Corporate Author) Name and Location
850100	Royal Aircraft Establishment, Farnborough, Hants, UK
5a. Sponsoring Agency's Code	**6a. Sponsoring Agency (Contract Authority) Name and Location**
N/A	N/A

7. Title A test facility for the calibration of pressure and acceleration transducers by a continuous sweep method

7a. (For Translations) Title in Foreign Language

7b. (For Conference Papers) Title, Place and Date of Conference

8. Author 1. Surname, Initials	9a. Author 2	9b. Authors 3, 4 ...	10. Date	Pages	Refs.
Whitall, J.S.			March 1976	31	I

11. Contract Number	12. Period	13. Project	14. Other Reference Nos.
N/A	N/A		IT 148

15. Distribution statement
(a) Controlled by –
(b) Special limitations (if any) – UNLIMITED

16. Descriptors (Keywords) (Descriptors marked * are selected from TEST)

Calibrating*. Accelerometers*. Pressure sensors*.
Pressure transducer calibration equipment. Accelerometer calibration equipment.

17. Abstract

The equipment described enables quick and accurate calibration of absolute, differential and gauge pressure transducers with range maxima between 350Pa and 35MPa (0.05 lb/in^2 and 5000 lb/in^2) and accelerometers with range maxima between 1.0g_n and 100g_n.

Both types of transducer are calibrated by subjecting them and an accurate reference transducer to a continuous sweep of input parameter. Graphs are drawn by an X-Y recorder of either the direct output of the transducer under test or its output suitably processed to show departures from the ideal nominal linear output.

F5910/1

RAE Form A143