AD-A034 662 CONSTRUCTION ENGINEERING RESEARCH LAB (ARMY) CHAMPAI--ETC F/G 13/5
THE EFFECTS OF CLUSTERED POROSITY ON THE SHEAR STRENGTH OF A 51--ETC(U)
DEC 76 H S LAMBA, E P COX
UNCLASSIFIED CERL-TR-M-196 NL

1 OF 1
AD
A034662

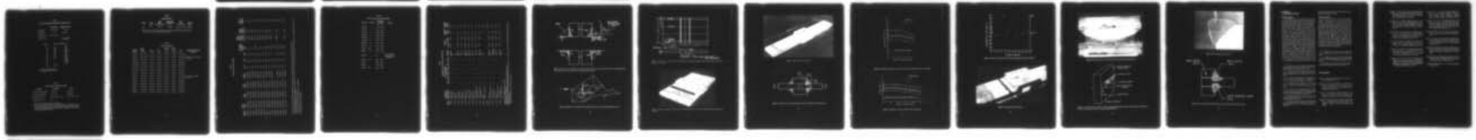

END
DATE
FILMED
2-77

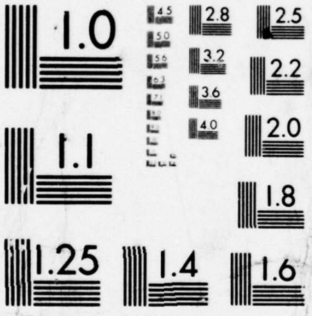

MICROCOPY RESOLUTION TEST CHART
NATIONAL BUREAU OF STANDARDS-1963-A

construction
engineering
research
laboratory

(12)
B.S.

TECHNICAL REPORT M-196
December 1976
Engineering Criteria for Welds

THE EFFECTS OF CLUSTERED POROSITY ON THE SHEAR STRENGTH OF A 514F TRANSVERSE FILLET WELDS

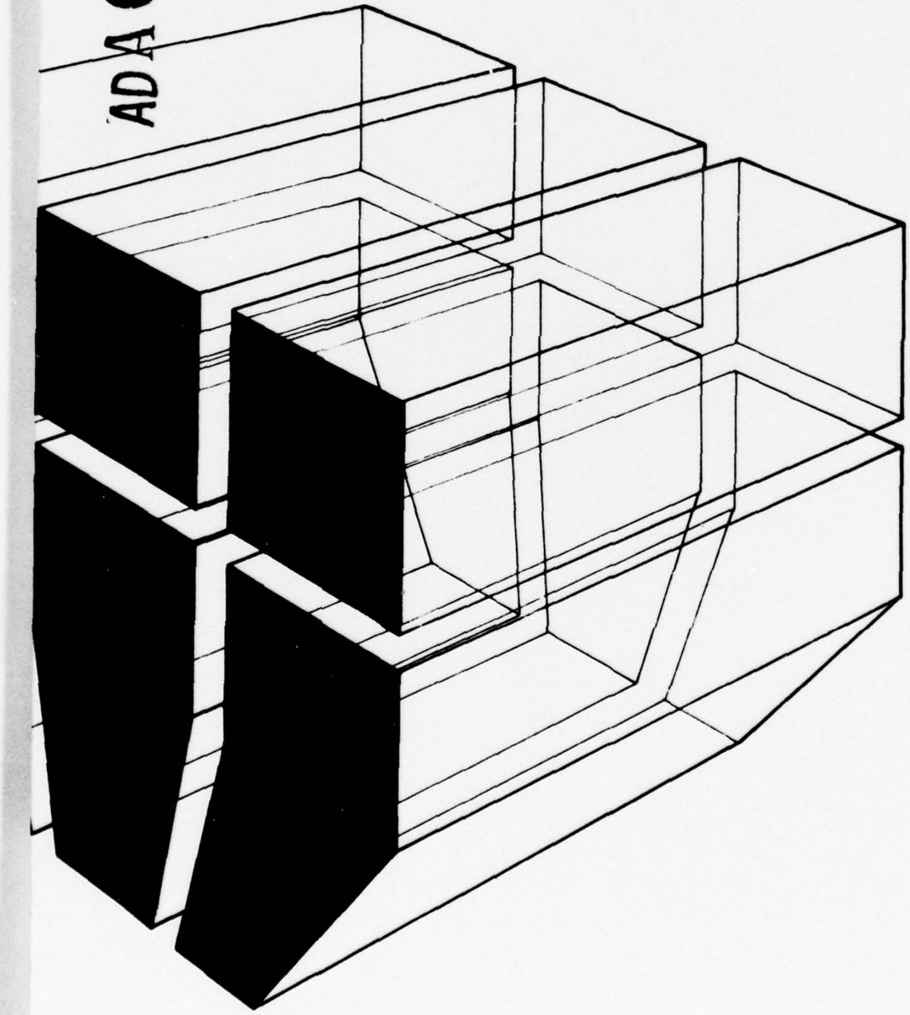

by
H. S. Lamba
E. P. Cox

Approved for public release; distribution unlimited.

UNCLASSIFIED

SECURITY CLASSIFICATION OF THIS PAGE *(When Data Entered)*

REPORT DOCUMENTATION PAGE		**READ INSTRUCTIONS BEFORE COMPLETING FORM**
(1) 1. REPORT NUMBER CERL-TR-M-196	2. GOVT ACCESSION NO.	3. RECIPIENT'S CATALOG NUMBER (9)
(6) 4. TITLE *(and Subtitle)* THE EFFECTS OF CLUSTERED POROSITY ON THE SHEAR STRENGTH OF A 514F TRANSVERSE FILLET WELDS.		5. TYPE OF REPORT & PERIOD COVERED FINAL rept.,
		6. PERFORMING ORG. REPORT NUMBER
(10) 7. AUTHOR(s) H. S./Lamba E. P./Cox		8. CONTRACT OR GRANT NUMBER(s)
9. PERFORMING ORGANIZATION NAME AND ADDRESS CONSTRUCTION ENGINEERING RESEARCH LABORATORY P.O. Box 4005 Champaign, IL 61820		10. PROGRAM ELEMENT, PROJECT, TASK AREA & WORK UNIT NUMBERS 4K07801A0K1-02-102
11. CONTROLLING OFFICE NAME AND ADDRESS		(11) 12. REPORT DATE December 1976
		13. NUMBER OF PAGES 24
14. MONITORING AGENCY NAME & ADDRESS *(if different from Controlling Office)* (12) 24p.		15. SECURITY CLASS. *(of this report)* Unclassified
		15a. DECLASSIFICATION/DOWNGRADING SCHEDULE

16. DISTRIBUTION STATEMENT *(of this Report)*

Approved for public release; distribution unlimited.

D D C

JAN 21 1977

C

17. DISTRIBUTION STATEMENT *(of the abstract entered in Block 20, if different from Report)*

18. SUPPLEMENTARY NOTES

Copies are obtainable from National Technical Information Service
Springfield, VA 22151

19. KEY WORDS *(Continue on reverse side if necessary and identify by block number)*

clustered porosity
steel weldments
shear strength

20. ABSTRACT *(Continue on reverse side if necessary and identify by block number)*

This report presents the results of a study of the effects of clustered porosity on the transverse shear strength of A 514F steel weldments. The amount of porosity induced into the specimens ranged from zero to over 20 percent of the fracture surfaces. Results indicate that clustered porosity, up to about 10 percent, has little effect on the shear strength or ductility of transverse shear welds. A slight decline in shear strength was observed for larger amounts of porosity. Results also indicated that secondary defects in the fillet welds which were undetected by x-ray radiography reduced strength below that found in the specimens containing porosity only.

LB

DD FORM 1 JAN 73 1473 EDITION OF 1 NOV 65 IS OBSOLETE

UNCLASSIFIED 405279

1 SECURITY CLASSIFICATION OF THIS PAGE *(When Data Entered)*

410412

FOREWORD

This investigation was conducted for the Directorate of Military Construction, Office of the Chief of Engineers (OCE) under Project 4K07801AOK1, "Engineering Criteria for Design and Construction"; Task 02, "Applications Engineering"; Work Unit 102, "Engineering Criteria for Welds." The OCE Technical Monitor was Mr. I. A. Schwartz.

The research was performed by the Metallurgy Branch, Materials and Science Division, U.S. Army Construction Engineering Research Laboratory (CERL). Dr. A. Kumar is Chief, Metallurgy Branch and Dr. G. R. Williamson is Chief, Materials and Science Division.

COL J. E. Hays is Commander and Director of CERL and Dr. L. R. Shaffer is Technical Director.

A

CONTENTS

DD FORM 1473 1
FOREWORD 3
LIST OF TABLES AND FIGURES 5

1 INTRODUCTION 7
  Background
  Objectives
  Approach

2 RESULTS AND DISCUSSION. 8
  Specimen Design
  Test Results
  Fracture Surface Examination

3 CONCLUSIONS 10

4 RECOMMENDATIONS 10

TABLES 11
FIGURES 16

APPENDIX: LITERATURE REVIEW 23

REFERENCES 23
DISTRIBUTION

TABLES

Number		Page
1	Chemical Composition of Base Metal and Welding Electrode	11
2	Tensile Properties of Base Metal and Weld	11
3	Welding Parameters	12
4	Fillet Weld Dimensions	12
5	Failure Loads and Shear Strengths	13
6	Effect of Porosity on Shear Weld Ductility	14
7	Description of Fracture Surfaces and Weld Flaws	15

FIGURES

Number		Page
1a	Elastic Stress Distributions Obtained by a Finite Element Solution	16
1b	Illustration of Qualitative Stress Distribution in Transverse Fillet Weld Loaded in Shear	16
2	Dimensions of Fillet Weld Specimen Blanks and Individual Specimens After Saw Cutting	17
3	Fillet Weld Specimens Sawed From As-Welded Blanks	17
4	Machined Fillet Weld Specimen	18
5	Dimensions Used in Calculating Shear Stress Values in Fillet Weld Test Specimens	18
6	Dependence of Strength on Percent Porosity	19
7	Dependence of Factors of Safety on Percent Porosity	19
8	Ductility of Fillet Welds vs. Percent Porosity	20
9	Fractured Fillet Weld Specimen	20
10	Fracture Surfaces of Fillet Weld Specimen Containing Clustered Porosity	21

FIGURES (cont'd)

Number **Page**

11 Composite Fracture Surface of Fillet Weld Specimen Showing Types and Locations of Defects Encountered and Fracture Surface of Unflawed Regions (Smooth) 21

12a Macrograph of Fillet Weld, 4.7x 22

12b Average Rockwell Hardness of Base Metal, Weld Metal, and Heat-Affected Zone 22

THE EFFECTS OF CLUSTERED POROSITY ON THE SHEAR STRENGTH OF A 514F TRANSVERSE FILLET WELDS

1 INTRODUCTION

Background

A significant amount of research has been conducted on the static tensile properties of structural steel and aluminum butt welds. Part of this research has been done on butt welds containing various defects, such as lack of penetration and porosity. However, little has been done to characterize the behavior of fillet welds, which are used in fabrication of many structures. (The appendix highlights the significant findings of the pertinent literature on butt and fillet welds.)

Studies of butt welds are less complicated than those of fillet welds in that defects can be isolated, i.e., located in a uniform stress field remote from other stress concentrators. Investigation of defects in fillet welds requires careful specimen fabrication and testing because the fillet weld itself is a severe stress concentrator. Both longitudinal and transverse fillet welds contain large stress concentrations, generally at the roots and toes of the welds. A finite element solution for the elastic stress field in an unflawed transverse fillet weld is available in the literature.[1] Figure 1a shows the stress distributions along the weld faces in a transverse fillet weld which is subjected to the type of loading shown in Figure 1b. The maximum and minimum stresses refer to the principal tensile and compressive stresses and are drawn irrespective of their directions. The maximum shear stress plane occurs at 22.5 degrees to the loading direction (Figure 1b) and corresponds to the plane on which ductile failure would be expected to occur.

Since stresses at the root of the weld are higher than those at the toe, stress concentration at the root is more critical. Stresses at the toe can be reduced somewhat by increasing the degree of weld concavity, which may be achieved by increasing the heat input during welding, using multiple pass welds or gas tungsten arc remelting in the toe area. Increasing the weld radius at the toe would not be worthwhile, since the root stresses are more important. If clustered porosity is introduced in the fillet weld, the stress concentrations at the toe and the porosity would act synergistically to increase the stress concentration at the root.

Objectives

The objectives of this investigation were to determine (1) to what extent clustered porosity affects the static shear strength of transverse fillet welds, and (2) whether deleterious amounts of clustered porosity can be detected by x-ray radiography.

Approach

A specimen typical of commonly used fillet (shear) welds but also providing ease in measuring the mechanical properties of interest was required. The specimen type chosen (Figure 2) had four fillet welds: two multiple-pass welds located opposite each other and two single-pass welds containing clustered porosity.

A strain-gaged prototype specimen was pulled in tension to failure early in the test program to assess the specimen behavior. The strain gages indicated that no significant bending strains occurred, thus assuring that loading was transmitted in shear.

The fillet weld specimens were carefully prepared to insure that the weld contours met American Welding Society (AWS) specifications.[2] The materials used in fabricating the specimens were A 514F (U.S. Steel Corporation "T-1") steel plate, 3/4-in. (1.91 cm) thick and Murex Hyloy 110 1/16-in. (0.16 cm) bare wire welding electrode. Table 1 provides the chemical compositions of these materials and Table 2 presents the weld and base metal mechanical properties. Table 3 presents the welding parameters used; the heat input of the welds was 45 to 48 kJ/in. (17.5 to 18.9 kJ/cm), which has been found to produce favorable weldment mechanical properties.[3]

The specimens were fabricated from 14-in.-(35.6-cm)-long blanks oriented so that the rolling direction was parallel to the loading axis. Welding was performed in a clamped fixture at 45 degrees to the vertical, which aided in reducing distortion. All specimen fabrication was by the automatic gas metal arc welding (GMAW)

---

[1] B. Kato and K. Morita, "Strength of Transverse Fillet Welded Joints," *Welding Journal*, Vol 53, No. 2 (February 1974), Research Supplement, pp 59s-64s.

[2] *Structural Welding Code*, D1.1-75 (American Welding Society, 1975), Section 3.6.

[3] F. V. Lawrence and E. P. Cox, "Influence of Inadequate Joint Penetration on Tensile Behavior of A 514 Steel Welds," *Welding Journal*, Vol 55, No. 5 (May 1976), Research Supplement, pp 113s-205s.

process. To induce clustered porosity into the single-pass test welds, the shielding gas was momentarily interrupted. The amount of porosity was varied by altering the time of the interruption in amounts ranging from zero to 4 sec.

After fabrication, the specimen blanks were sawed into fifteen 4-in.-(10.16-cm)-wide specimens for testing (Figure 3). Care was taken to insure that the porosity was centered in each of the specimens. After fabrication and machining to final dimension (Figure 4), each specimen was x-ray radiographed to insure that the intended porosity cluster(s) were present and other defects were not.

Prior to testing, the welds were also carefully examined and measured. The dimensions of the weld legs (S_1 and S_2 in Figure 5) were measured on etched sections of the weld; the leg sizes determined (Table 4) are averages of four readings. Table 4 also contains the throat dimension (T) and the nominal throat dimensions (T_N). T, which is the length of the perpendicular from the weld root to the weld surface, was calculated from the leg sizes. Throat dimensions were measured using a fillet weld gage. All specimens examined met the AWS specifications for fillet weld profiles.

The specimens were identified with numbers having the form:

FWmCP-n

where FW = fillet weld
m = the serial number for specimens having approximately the same porosity levels
CP = clustered porosity
n = the number of seconds the shielding gas was interrupted.

The overall weldment quality was evaluated using military specification MIL-R-11468 (ORD).[4] In addition, the welds were evaluated using the American Society of Mechanical Engineers (ASME) *Boiler and Pressure Vessel Code*[5] for radiographic acceptance.

The weld specimens were pulled in tension to failure in accordance with American Society for Testing and Materials (ASTM) Specification A 370.[6] A 1 million-lb MTS electrohydraulic test machine and a crosshead rate of 0.01 in. (0.025 cm) per minute were used. Autographic plots of load vs. deformation were made during the tests.

2 RESULTS AND DISCUSSION

Specimen Design

The design of the specimen used in this investigation (Figure 4) eliminates bending and results in only shear stresses being transmitted through the welds; this was verified experimentally in the early stages of the study. Figure 1 diagrams the stress distribution through the welds. As seen in this figure, the maximum stresses occur at the root of the weld. Stress magnitude tends to decrease rapidly with distance from the root; consequently, any weld defect will be affected by its location in the weld, and its effect on the weld's mechanical properties will depend on the strength of the interaction between the defect and the root. Defects in fillet welds can therefore either drastically reduce mechanical properties, have no effect, or cause a slight improvement.

Test Results

The specimens were pulled monotonically in tension to failure using a 1 million-lb-capacity MTS testing machine. During the testing, an autographic recording was made of the load and the specimens' deformation responses. The first observable cracking that occurred during the testing emanated from the roots of the welds. Serrations observed prior to the maximum load point in the load deformation curve were believed to be caused by continued crack extension. The maximum loads were noted for each test, and the lengths of the fracture paths on the sides of the specimens (W in Table 4) were measured. The stiffness of the specimens was approximately 3800 kip/in. (6.6 MN/cm).

The maximum shear strengths S_T, S_N, and S_W were calculated by dividing the maximum load by throat area, nominal throat area, and fracture area, respectively (Table 5). These areas were determined by multiplying the total weld length (both sides) by the throat, nominal throat, and length of fracture path, respectively. The different shear strength values represent the shear

---

[4] *Radiographic Inspection; Soundness Requirement for Arc and Gas Welds in Steel,* Military Specification MIL-R-11468 (ORD) (Department of Defense, 1951).

[5] *Boiler and Pressure Vessel Code* (American Society of Mechanical Engineers, 1974), Section III, Subsection NB-5320 and Section VIII, Appendix IV.

[6] *Mechanical Testing of Steel Products,* Specification A 370 (ASTM, 1975).

strengths calculated by AWS code[7] versus those which occurred in the actual fracture surface. The AWS allowable stresses for bridges were employed instead of those for buildings because the former are more stringent. The allowable shear stress in fillet welds for bridges is $0.27\sigma_u$ while that for buildings is $0.30\sigma_u$ (σ_u is ultimate strength).

The percent porosity on the fracture surface was calculated from the smallest rectangle that enclosed a pore cluster, except where scattered pores occurred; in such cases, the areas of the individual pores were summed. The percent porosity on the fracture surface was then 100 times the ratio of the area enclosing the porosity to the total fracture surface area.

Figure 6 plots the values of maximum shear strength as a function of percent porosity on the fracture surface. Examination of Figure 6 reveals that, within the scatter present, porosity up to about 10 percent had little effect on the shear strength of the weldments. Porosity greater than 10 percent, which would cause rejection of the weld on the basis of military radiographic inspection criteria, caused a reduction in strength, but the strength levels were still much greater than the design strength levels. The ultimate shear strengths based on fracture area were about 20 percent less than those based on throat area, although the difference was not significant since the design strength was still much less.

The scatter in the data points presented in Figure 6 led to close examination of the fracture surfaces. This examination revealed that secondary defects which were undetected by x-ray radiography were present and contributed to producing failures at lower loads. Consequently, the data shown in Figure 6 indicate which specimens failed due to porosity defects alone (solid symbols) and which specimens contained other defects (open symbols) that may have been the defects actually controlling fracture.

The minimum ultimate tensile strength (σ_u) of the weld metal was assumed to be 115 ksi (792.9 MPa) (the minimum specified for the base metal in handbooks). The allowable shear stress for fillet welds is $0.27\sigma_u$ or 31.05 ksi (214.1 MPa) based on this value of σ_u. Figure 7 shows how the factor of safety varies with the percent of porosity on the fracture surface. The data were obtained by taking the ratio of the actual ultimate shear strength calculated for either the measured throat or fracture path to the design shear strength. The trends are the same as for the data presented in Figure 6. The factors of safety ranged from 3 to 4.5 for fillet welds containing up to 10 percent porosity. Therefore, the design shear stress specified by the AWS for transverse fillet welds is overly conservative. In a similar sense, the porosity levels in these specimens were more severe than those accepted by MIL-R-11468 (ORD). This serves to indicate that radiographic indications by themselves will not always predict the mechanical property characteristics of a weld.

Previous research (see the appendix) showed that a change in ductility would be the first indicator of the detrimental effects of porosity. The ductility of the fillet weld joints, as measured by the deformation of the weldments to failure, was generally unaffected by the presence of porosity (Figure 8). The deformation of the sound weld (no porosity) fillet weld specimens was approximately 0.12 in. (0.30 cm) on the average. The specimens having welds containing clustered porosity had only slightly reduced ductility–0.10 in. (0.25 cm) on the average over the range of porosity investigated. Thus, neither clustered porosity nor the secondary defects had a significant effect on the deformation to failure of the weldments. Apparently, the presence of the crack-like fillet root was sufficiently severe to dominate the fracture process, so that the ductility was already reduced to its lowest level.[8]

Fracture Surface Examination

The fracture surfaces were thoroughly examined. Figure 9 shows a typical fractured fillet weld specimen. Figure 10 shows the fracture surface of a fillet weld containing clustered porosity. Table 7 presents data from observations and x-ray radiographic inspections of all the fracture surfaces.

The amount of porosity considered acceptable according to MIL-R-11468 (ORD) is based on the largest pore, its total enclosed length, average size, and average distance between pores. Using these criteria, five of the 15 specimens were rated acceptable (Table 5). The ASME radiographic standard in the *Boiler and Pressure Vessel Code* is based on pore size distribution. The same five specimens which were acceptable according to the military specification also met ASME standards; the other specimens were rated unacceptable because they exceeded the allowable pore area or distribution.

---

[7] *Structural Welding Code*, D1.1-75 (American Welding Society, 1975), Table 9.3.1.

[8] F. V. Lawrence and E. P. Cox, "Influence of Inadequate Joint Penetration on Tensile Behavior of A 514 Steel Weld," *Welding Journal*, Vol 55, No. 5 (May 1976), Research Supplement, pp 113s-205s.

Close examination of the fracture surface indicated that the fracture path did not propagate along the region of pure shear. The fracture surface in regions of defect-free weld metal was generally inclined at an angle (5 to 25 degrees) from the tensile axis–a region where a tensile stress component was present. In areas without clustered porosity, the fracture surface was smooth and slightly curved. Close to the clustered porosity, the fracture surface was coarse, and the fracture path varied unpredictably among the specimens.

Other, smaller flaws were often present in the fillet weld fracture surfaces. These generally occurred in the weld metal near the fusion line a short distance from the clustered porosity (Figure 11). The secondary defects, which were planar in nature and aligned perpendicular to the loading axis, were believed to have been caused by dissolved gases in the base metal. Although the flaws were small and oriented so that they were not detected by x-ray radiography, they were large enough in some instances to be the controlling defect in the clustered porosity welds. These undetected flaws acted synergistically with the notch at the root of the fillet weld. Table 7 indicates the acceptability of the specimens based on other flaws and on the governing flaws, whether porosity or another type.

Fractures in the fillet weld specimens initiated with cracks emanating from the weld roots. Figure 12a shows the macrostructure of a fillet weld and the root location in the weld. After the crack initiated at the root, it propagated until it was large enough to cause sudden fracture. The average hardness of the base metal, weld metal, and heat-affected zone were measured (Figure 12b).

3 CONCLUSIONS

a. The results indicated that the design shear stress specified in the AWS *Structural Welding Code* for fillet welds is overly conservative. Factors of safety for sound fillet welds ranged from 3 to 4.5.

b. The ultimate shear strength of fillet welds containing up to approximately 10 percent porosity on the fracture surface was unchanged by the porosity. Clustered porosity levels greater than this reduced the ultimate shear strength, but it remained above the design strength levels specified in the AWS *Structural Welding Code*, D1.1-75.

c. In some instances, secondary (planar) defects in the fillet welds caused a reduction of strength below that seen in the specimens containing clustered porosity only. X-ray radiography did not detect the secondary defects, which were believed to have been caused by dissolved gases in the base metal.

d. The ductility of the fillet welds was relatively unaffected by the presence of clustered porosity or secondary defects. It is believed that this was because the weld root itself was a more severe stress concentration than the clustered porosity in many of the specimens.

e. Radiographs of the welds containing clustered porosity indicated that five of the specimens contained acceptable amounts of porosity based on military (MIL-R-11468 [ORD]) and ASME *(Boiler and Pressure Vessel Code)* specifications for weld acceptability; the other welds were unacceptable.

f. Radiographic indications by themselves will not always predict the mechanical property behavior of a weld. Radiography, joint weld geometry, and the mechanical toughness properties must be known to predict the mechanical behavior accurately.

4 RECOMMENDATIONS

a. Since the factors of safety were found to be overly conservative, it is recommended that the design shear stress be increased for transverse fillet welds used for static service applications.

b. Since clustered porosity up to 10 percent did not have any detrimental effect on the static strength of fillet welds, it is recommended that the radiographic inspection standards (ASME *Boiler and Pressure Vessel Code* and MIL-R-11468 [ORD]) be relaxed to allow greater porosity levels for fillet welds in static service.

Table 1

Chemical Composition of Base Metal and Welding Electrode

	Base Metal*	**Welding Electrode****
Manufacturer	U.S. Steel Corp.	Murex
Designation	T-1	Hyloy 110
Plate Thickness	3/4 in. (1.91 cm)	–
Electrode Type	–	1/16 in. bare wire (0.16 cm)

Element	Chemical Composition, %	
C	.15	0.084
Mn	.89	1.54
P	.009	0.008
S	.027	0.008
Si	.27	0.45
Ni	.90	2.43
Cr	.52	0.049
Mo	.42	0.48
V	.06	0.008
Al	–	0.004
Ti	–	0.0075
Zr	–	0.004
B	.0015	–
Cu	.21	–

* Data from independent analysis.
** Data supplied by manufacturer.

Table 2

Tensile Properties of Base Metal and Weld

Properties	**Base Metal***	**Weld****
Tensile Strength, ksi (MPa)	120.8 (834)	140.0 (965)
Yield Strength, ksi (MPa)	113.1 (779)	126.3 (869)
Elongation at Fracture, %	36.0 in 2.0 in. (5.1 cm)	50 + in 3/4 in. (1.9 cm)
Reduction in Area, %	66.4	–

*Properties of base metal provided by manufacturer.
**Average of three specimens taken from weld metal from F. V. Lawrence, Jr., E. P. Cox, and E. M. Honig, Jr., *Influence of Heat Input and Lack of Penetration Length on Static Tensile Strength of High-Strength Structural Steel Weldments,* Technical Report M-135/ADA012730 (CERL, 1975).

Table 3

Welding Parameters*

Voltage V	Current amps	Travel Speed in./min (cm/min)	Interpass and Preheat Temp. °F (°C)	Heat Input kJ/in. (kJ/cm)	Shielding Comp.
30-32	350	14 (35.6)	200 (93.3)	45-48 (17.5-18.9)	98Ar-20$_2$

*Parameters were found to result in an acceptable weld contour (AWS *Structural Welding Code,* D1.1-75, Section 3.6). All joints welded in flat position.

Table 4

Fillet Weld Dimensions

Specimen Number	Weld Length in. (cm)	S_1 in. (cm)	S_2 in. (cm)	Measured T in. (cm)	Nominal T_n in. (cm)	W in. (cm)	Remarks on Weld Contour (Single-Pass)
FW1CP-0	4.04 (10.26)	.38 (.97)	.39 (.99)	.27 (.69)	.27 (.69)	.31 (.79)	Slight convexity with sharp toe radii
FW2CP-0	4.05 (10.29)	.38 (.97)	.39 (.99)	.27 (.69)	.27 (.69)	.38 (.99)	
FW3CP-0	4.09 (10.39)	.38 (.97)	.39 (.99)	.27 (.69)	.27 (.69)	.38 (.99)	
FW1CP-1/4	3.96 (10.06)	.38 (.97)	.38 (.99)	.27 (.69)	.27 (.69)	.38 (.99)	Flat contour with large toe radii
FW2CP-1/4	4.07 (10.34)	.46 (1.17)	.44 (1.12)	.32 (.81)	.27 (.69)	.38 (.99)	
FW1CP-1/2	4.08 (10.36)	.38 (.97)	.38 (.99)	.27 (.69)	.27 (.69)	.31 (.79)	
FW2CP-1/2	4.00 (10.16)	.46 (1.17)	.44 (1.12)	.32 (.81)	.27 (.69)	.38 (.99)	
FW1CP-1	3.89 (9.88)	.38 (.97)	.38 (.99)	.27 (.69)	.27 (.69)	.34 (.86)	
FW2CP-1	4.01 (10.19)	.46 (1.17)	.44 (1.12)	.32 (.81)	.27 (.69)	.38 (.99)	
FW1CP-2	3.98 (10.11)	.46 (1.17)	.48 (1.22)	.33 (.84)	.27 (.69)	.38 (.99)	
FW2CP-2	4.00 (10.16)	.46 (1.17)	.48 (1.12)	.33 (.84)	.27 (.69)	No failure	
FW1CP-3	4.00 (10.16)	.43 (1.09)	.41 (1.04)	.30 (.76)	.27 (.69)	.38 (.99)	
FW2CP-3	3.93 (9.98)	.43 (1.09)	.41 (1.04)	.30 (.76)	.27 (.69)	.38 (.99)	
FW1CP-4	4.03 (10.24)	.46 (1.17)	.48 (1.22)	.33 (.84)	.27 (.69)	.38 (.99)	
FW2CP-4	4.05 (10.29)	.43 (1.09)	.41 (1.04)	.30 (.76)	.27 (.69)	.38 (.99)	

Table 5

Failure Loads and Shear Strengths

Specimen Number	Ultimate Load kip (KN)	S_T* ksi (MPa)	S_N* ksi (MPa)	S_W* ksi (MPa)	FS_T**	FS_N**	FS_W**	Radiographic Acceptability (Porosity Only)	Area Enclosing Porosity (Fracture Surface) sq in. (cm^2)	Percent Porosity (Fracture Surface) %	Percent Porosity (Radiation) %
FW1CP-0	251.0(1116.4)	115.0(792.9)	115.0(792.9)	100.2(690.9)	3.70	3.70	3.23	A-I†	.00(.00)	0.00	0.0
FW2CP-0	309.0(1374.4)	141.6(976.3)	141.6(976.3)	100.4(692.3)	4.56	4.56	3.23	A-I	.00(.00)	0.00	0.0
FW3CP-0	285.0(1267.7)	129.2(890.8)	129.2(890.8)	91.8(633.0)	4.29	4.29	2.95	A-I	.00(.00)	0.00	0.0
FW1CP-1/4	295.0(1312.2)	138.1(952.2)	138.1(952.2)	98.1(676.4)	4.45	4.45	3.16	U-A11††	.02(.13)	0.66	0.5
FW2CP-1/4	321.0(1427.8)	123.3(850.2)	146.1(1007.4)	103.8(715.7)	3.97	4.71	3.34	A-I	.01(.06)	0.33	0.3
FW1CP-1/2	261.0(1160.9)	118.6(817.7)	118.6(817.7)	103.3(712.3)	3.82	3.82	3.33	U-A11	.09(.58)	2.92	2.0
FW2CP-1/2	318.0(1414.5)	124.2(856.4)	147.1(1014.3)	104.6(721.2)	4.00	4.74	3.37	A-I	.00(.00)	0.0	0.0
FW1CP-1	304.0(1352.0)	144.6(997.0)	144.6(997.0)	114.9(792.2)	4.66	4.66	3.70	U-A11	.26(1.68)	9.83	7.5
FW2CP-1	299.0(1330.0)	116.5(803.3)	138.1(952.2)	98.1(676.4)	3.75	4.48	3.16	U-A11	.63(4.06)	20.67	12.0
FW1CP-2	352.0(1566.0)	134.1(924.6)	163.2(1125.3)	116.5(803.3)	4.32	5.26	3.75	U-A11	.22(1.42)	7.27	5.0
FW2CP-2	373.0(1659.0)	141.5(975.6)	172.9(1192.1)	–	4.56	5.57	–	U-A11	–	–	8.0
FW1CP-3	241.0(1072.0)	100.5(692.9)	112.1(772.9)	79.3(546.8)	3.24	3.61	2.55	U-A11	.44(2.84)	14.47	10.0
FW2CP-3	242.0(1076.0)	102.6(707.4)	114.0(786.0)	81.0(558.5)	3.30	3.67	2.61	U-A11	–	–	7.0
FW1CP-4	351.0(1561.0)	131.9(909.5)	161.2(1111.5)	114.6(790.2)	4.25	5.19	3.69	U-A11	–	–	15.0
FW2CP-4	251.0(1116.0)	103.3(712.3)	114.8(791.5)	81.6(562.6)	3.33	3.33	2.63	U-A11	.55(3.55)	17.87	12.0

*S_T, S_N, and S_W are ultimate shear strengths based on measured throat T, nominal throat T_N, and measured fracture width W (Table 4).

**FS_T, FS_N, and FS_W are the factors of safety. See J.W. Bradley and R. B. McCauley, "The Effects of Porosity on Quenched and Tempered Steel," *The Welding Journal*, Vol 43, No. 9 (1964), Research Supplement, pp 408s-414s.

†Acceptable in accordance with Standard I, MIL-R-11468(ORD).

††Unacceptable according to all Standards.

Table 6

Effect of Porosity on Shear Weld Ductility

Specimen	% Porosity	Deformation at Failure in.	Deformation at Failure cm	Remarks
FW1CP-0	0	0.102	0.259	
FW2CP-0	0	0.120	0.305	
FW3CP-0	0	0.100	0.254	
FW1CP-1/4	.7	0.104	0.264	
FW2CP-1/4	.3	0.126	0.320	
FW1CP-1/2	2.9	0.087	0.221	
FW2CP-1/2	0	0.132	0.335	
FW1CP-1	9.8	0.112	0.284	
FW2CP-1	20.7	0.117	0.297	
FW1CP-2	7.3	0.200	0.508	
FW2CP-2	–	>1.0	–	Excessive yielding of base metal outside fillet weld
FW1CP-3	14.5	0.087	0.221	
FW2CP-3	–	0.085	0.216	
FW1CP-4	–	0.190	0.483	
FW2CP-4	17.9	0.100	0.254	

Table 7

Description of Fracture Surfaces and Weld Flaws

Specimen Number	Fracture Surfaces Appearance* (Fracture Angle With Respect to Plane)	Pore Size Distribution, Dia. (Fracture Surface)** .015 in. (.04 cm)	.03 in. (.08 cm)	.06 in. (.16 cm)	.12 in. (.30 cm)	.19 in. (.48 cm)	.25 in. (.64 cm)	Other Flaws, Location	Flaw Length in. (cm) Summation #	Largest Flaw	Acceptability Based on Other Flaws##	Acceptability Based on Governing Flaws
FW1CP-0	Smooth (15°) Flat, then shallow	0	0	0	0	0	0	Planar flaws linear†	.38 (.96)	.15 (.38)	A-III	A-III
FW2CP-0	Smooth (7°) Smooth (11°)	0	0	0	0	0	0	None	–	–	A-I	A-I
FW3CP-0	Flat or irregular Irregular, smooth	0	0	0	0	0	0	Planar flaws, linear	1.50(3.81)	1.0(2.54)	U-A11	U-A11
FW1CP-1/4	Smooth (15°) Irregular, smooth	0	0	3	1	0	0	Planar flaw	.05(.13)	.05(.13)	A-II	U-A11
FW2CP-1/4	Smooth (15°) Flat to smooth (16°)	0	0	0	1	0	0	Planar flaws, linear	2.50(6.35)	1.50(3.81)	U-A11	U-A11
FW1CP-1/2	Smooth (6° to 15°) Flat, then shallow	18	3	5	1	0	0	Planar flaws, linear	3.00(7.62)	1.50(3.81)	U-A11	U-A11
FW2CP-1/2	Smooth (20°) Irregular, smooth	0	0	0	0	0	0	Planar flaw	.05(.13)	.05(.13)	A-II	A-II
FW1CP-1	Smooth, excl. porosity (15°) Irregular, smooth	9	27	14	2	1	1	Planar flaw	.05(.13)	.03(.08)	A-II	U-A11
FW2CP-1	Smooth, excl. porosity (17°) Flat, then irregular	16	14	7	1	0	1	Planar flaws, linear	.05(.13)	.03(.08)	A-II	U-A11
FW1CP-2	Irregular Smooth, excl. porosity (12°)	20	9	13	5	1	0	None	–	–	A-I	U-A11
FW2CP-2	–	–	–	–	–	–	–	–	–	–	–	U-A11
FW1CP-3	Flat, irregular Smooth, excl. porosity (23°)	31	10	2	3	1	0	Planar flaws, linear	.06(.15)	.03(.08)	A-II	U-A11
FW2CP-3	Smooth, excl. porosity Flat, LOF (13°)	16	4	8	6	0	0	Large lack of fusion (LOF)	1.00(2.54)	1.00(2.54)	U-A11	U-A11
FW1CP-4	Irregular, LOF Smooth, excl. porosity (17°)	–	–	–	–	–	–	Large LOF	1.25(3.18)	1.25(3.18)	U-A11	U-A11
FW2CP-4	Flat, then irregular Smooth, excl. porosity (20°)	17	12	14	2	1	1	Planar flaws, linear	.05(.13)	.03(.08)	A-II	U-A11

*See Figure 11 for explanation of fracture terminology.

**Sizes and numbers are approximate.

#All flaws projected on weld longitudinal axis and the individual projections summed.

##Radiographic Inspection Spec. MIL-R-11468 (ORD) (Width of weld taken to be nominal weld size, i.e., 0.38 in. [0.96 cm]). A-I, II, or III denotes acceptable according to Standard I, II, or III, respectively.

†See Figure 11 for explanation of flaws similar to linear porosity.

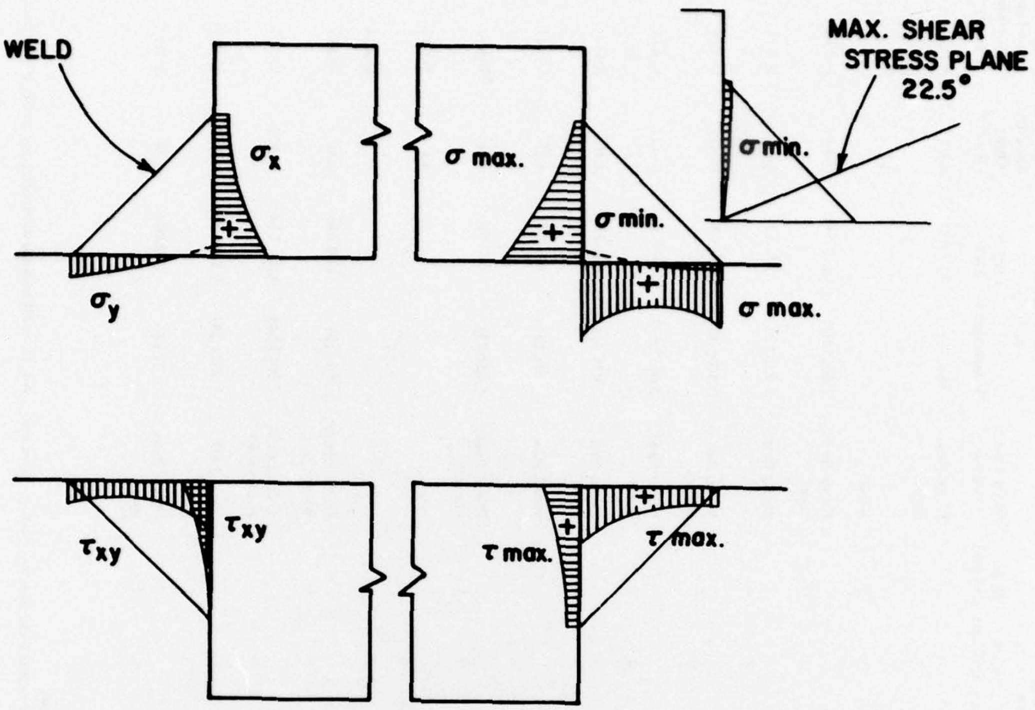

Figure 1a. Elastic stress distributions obtained by a finite element solution. (Reprinted from the *Welding Journal* (Kato and Morita) by permission of the American Welding Society.)

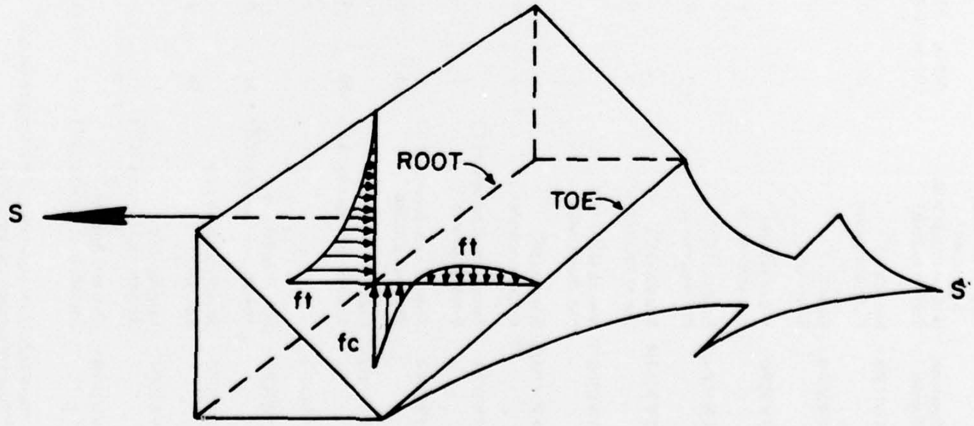

Figure 1b. Illustration of the qualitative stress distribution in a transverse fillet weld loaded in shear.

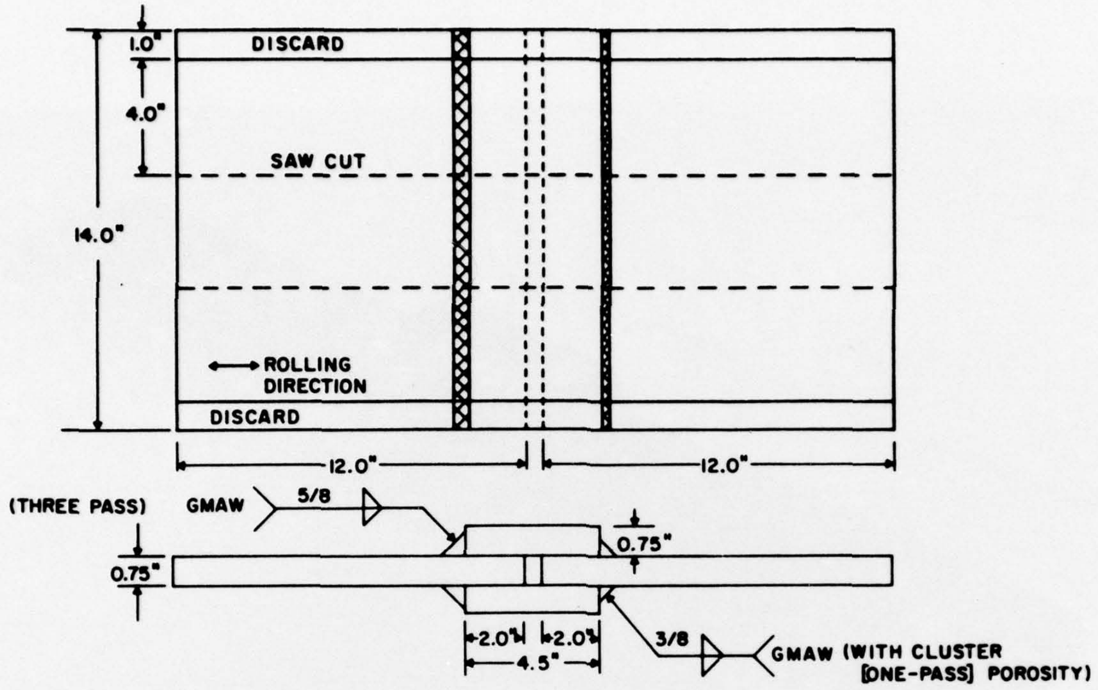

Figure 2. Dimensions of fillet weld specimen blanks and individual specimens after saw cutting. SI conversion factor: 1 in. = 2.54 cm.

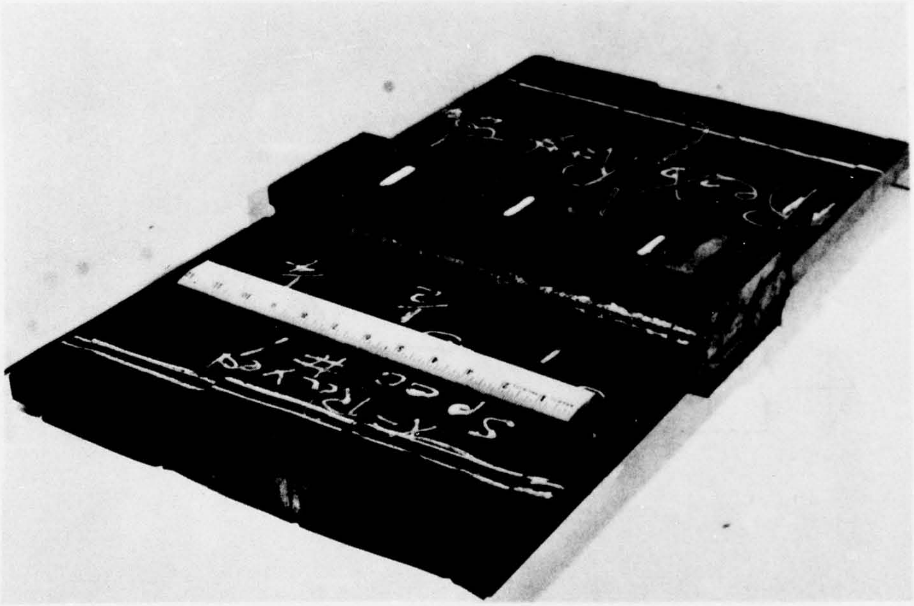

Figure 3. Fillet weld specimens sawed from as-welded blanks. The 1-in. (2.54 cm) segments at both weld ends were discarded.

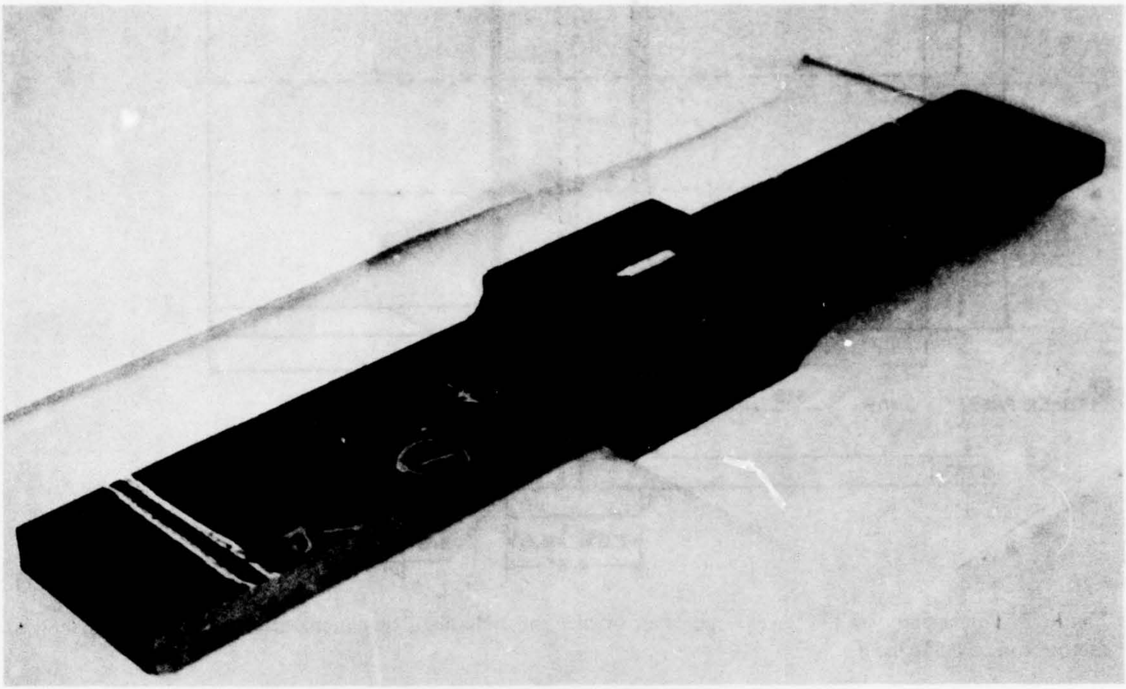

Figure 4. Machined fillet weld specimen.

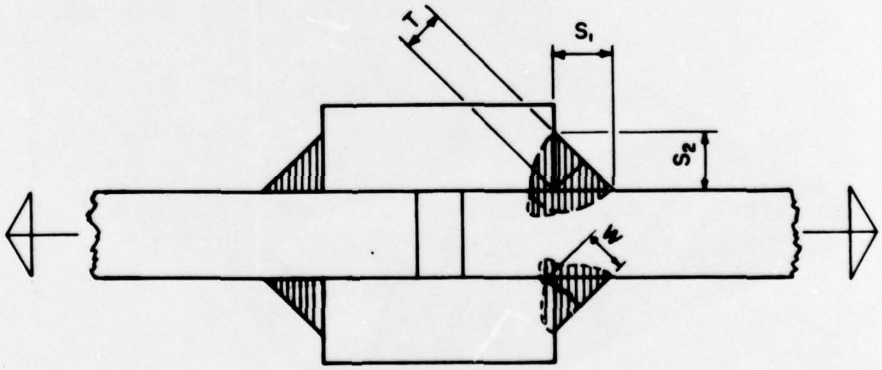

Figure 5. Dimensions used in calculating shear stress values in fillet weld test specimens.

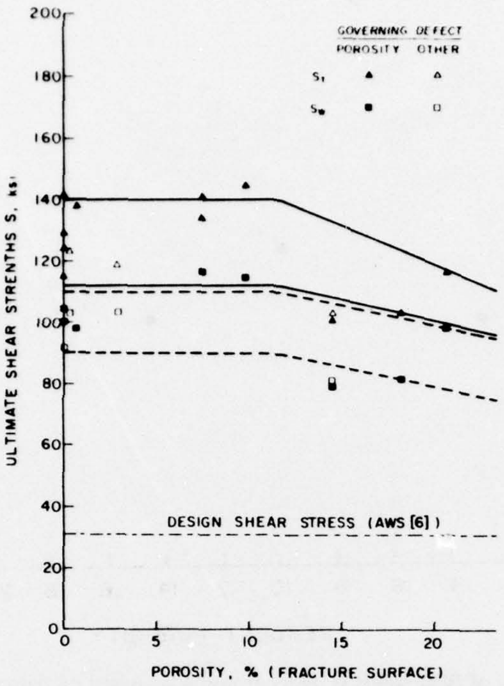

Figure 6. Dependence of strength on percent porosity. SI conversion factor: 1 ksi = 6.9 MPa.

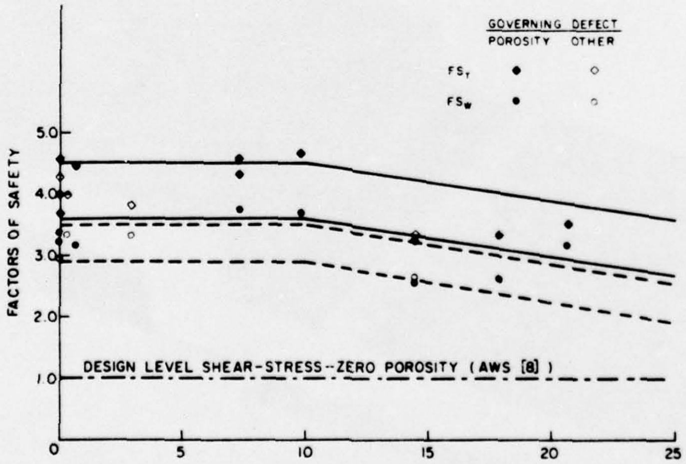

Figure 7. Dependence of factors of safety on percent porosity.

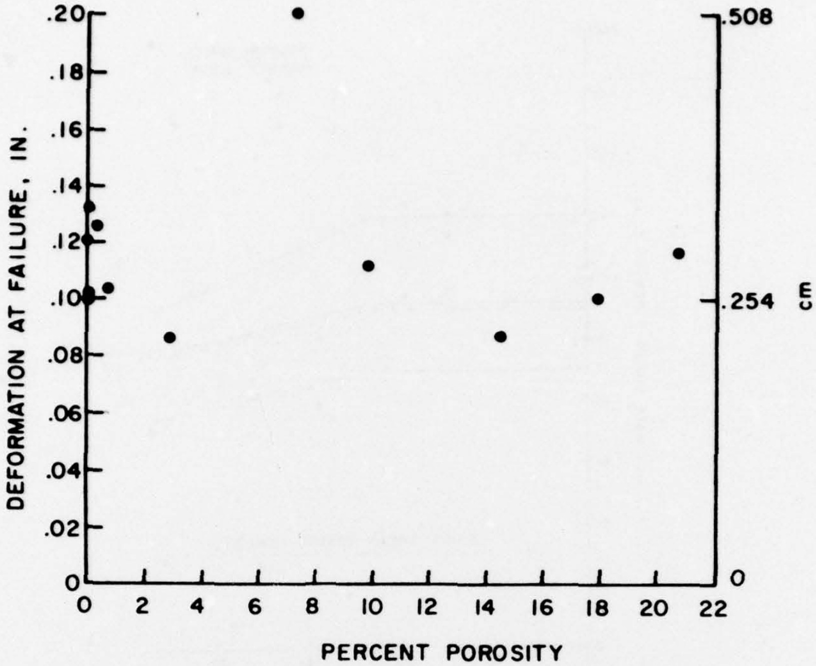

Figure 8. Ductility of fillet welds vs. percent porosity. Based on data from Figure 6.

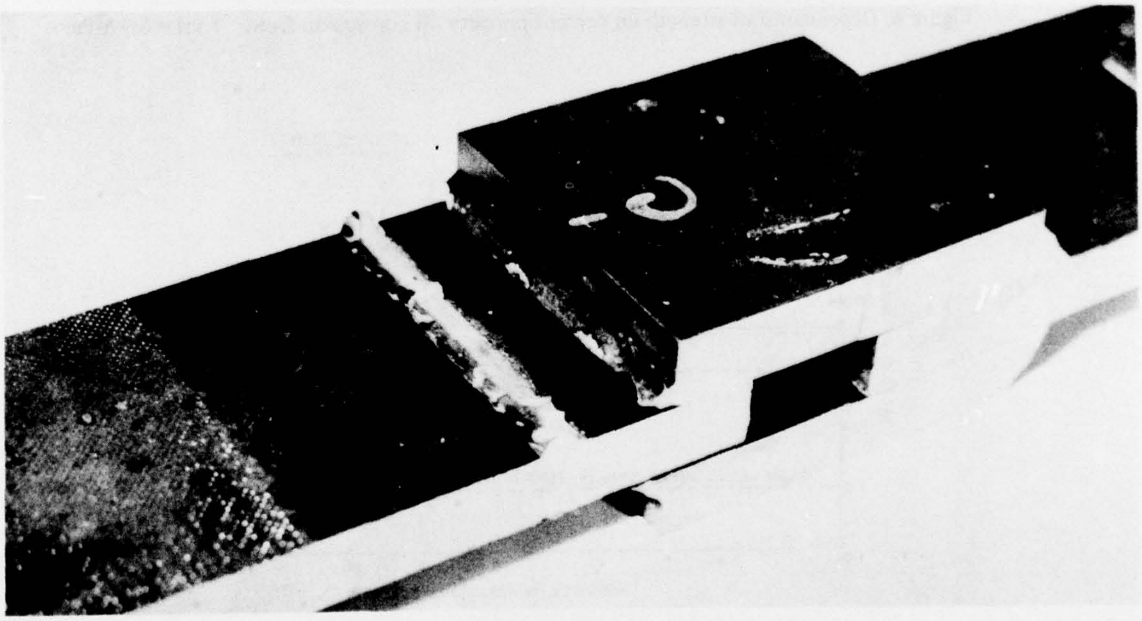

Figure 9. Fractured fillet weld specimen.

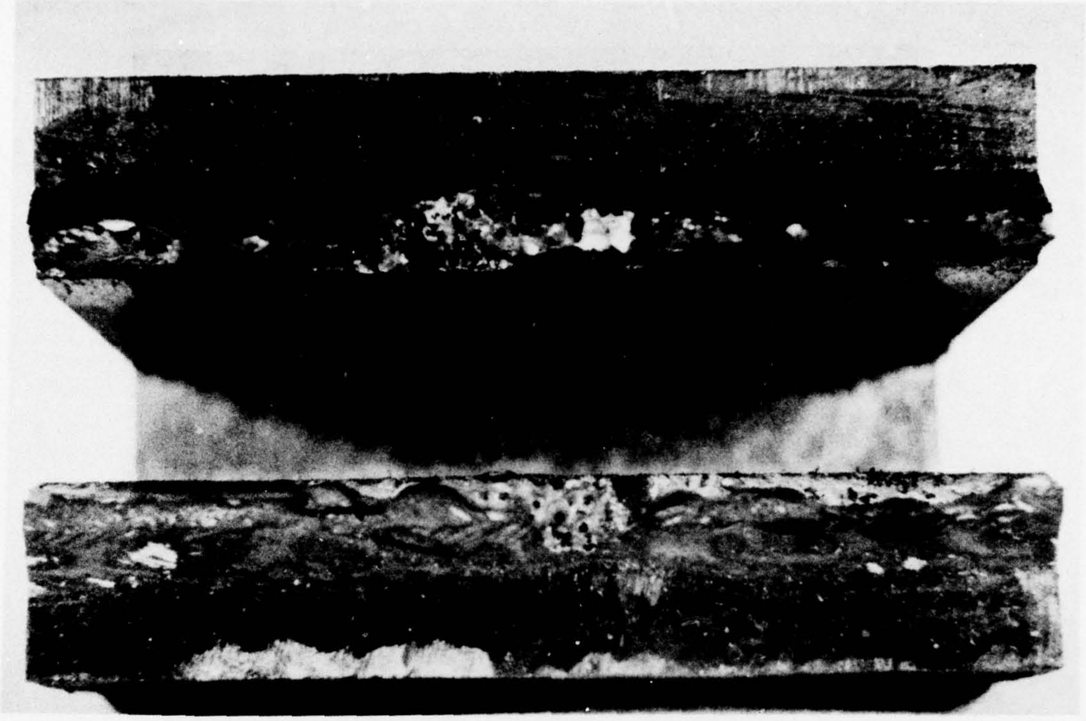

Figure 10. Fracture surfaces of fillet weld specimen containing clustered porosity.

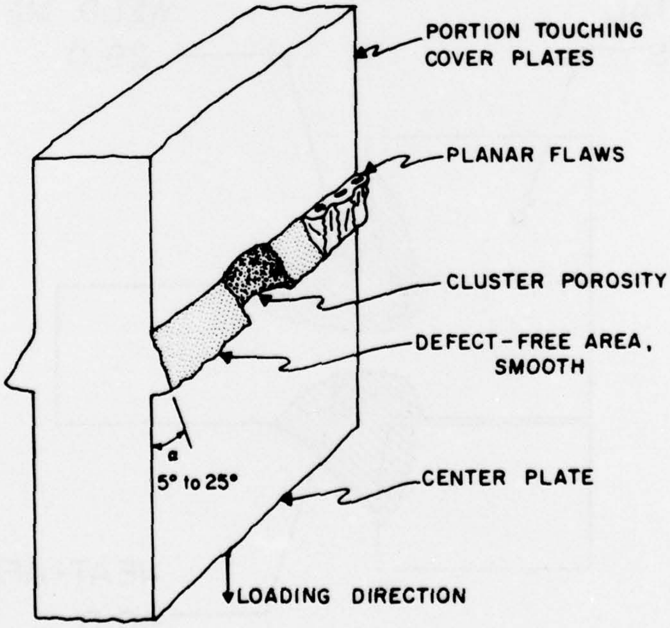

Figure 11. Composite fracture surface of fillet weld specimen showing the types and locations of the defects encountered and the fracture surface of unflawed regions (smooth).

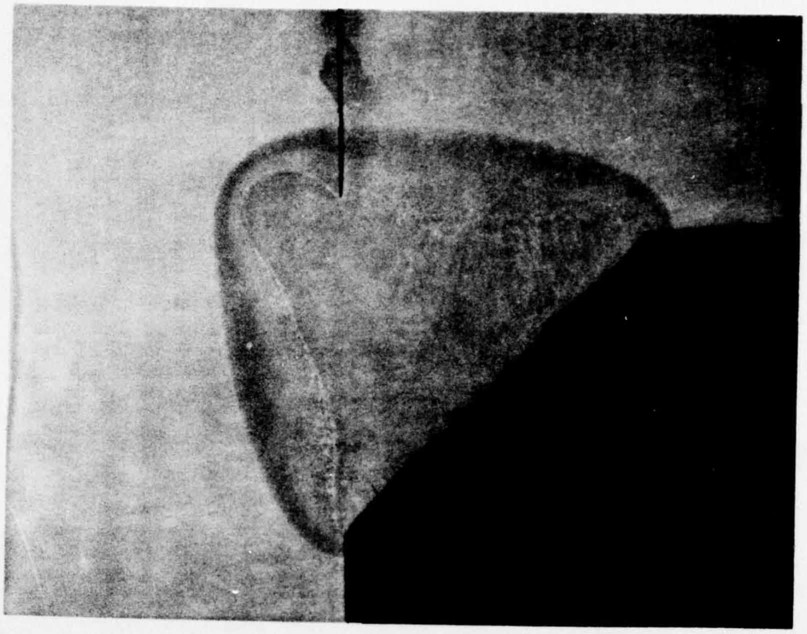

Figure 12a. Macrograph of fillet weld, 4.7x.

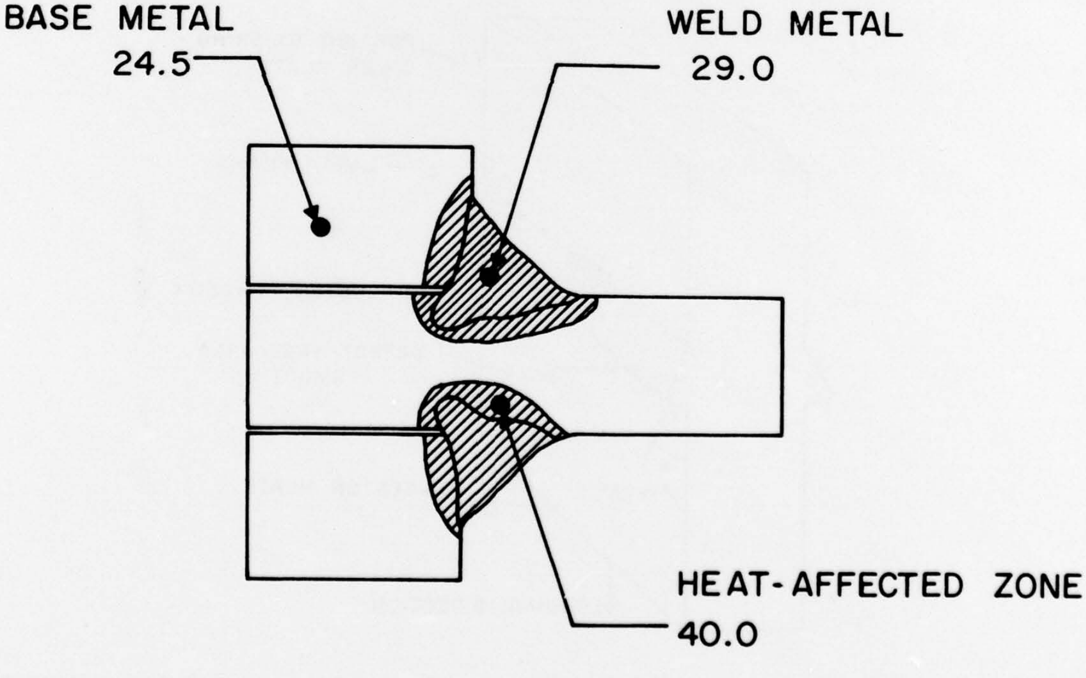

Figure 12b. Average Rockwell hardness of base metal, weld metal, and heat-affected zone.

APPENDIX: LITERATURE REVIEW

Butt Weld Research

In an extensive review of the literature on aluminum butt welds, Pense and Stout found that small amounts of scattered porosity had no influence on tensile strength.[9] Similar research conducted by Lawrence and Munse[10] showed that significant amounts of microporosity are often present; when combined with visible macroporosity, it tends to slowly decrease strength and ductility. Green, Hamad, and McCauley[11] investigated the effects of uniformly distributed porosity on the tensile and impact properties of American Iron and Steel Institute (AISI) 1020 steel. Porosity levels up to 7 percent had no effect on the tensile properties, but porosity levels greater than this reduced both strength and ductility. Similar results were noted in studies by Bradley and McCauley[12] and Lawrence, Radziminski, and Kruzic[13] on ASTM A 517F steel welds containing uniform porosity. Both investigations noted that a rapid decrease in weldment ductility preceded any noticeable reduction in tensile strength. More recently, Honig[14] and Honig and Carlson[15] investigated the effects of clustered porosity on the tensile properties of ASTM A 514F butt welds. They attempted to use fracture mechanics to describe the behavior, but reached no conclusions. Their results also showed a rapid decrease in ductility as the amount of porosity increased; little loss in strength was noted.

Fillet Weld Research

The American Institute of Steel Construction (AISC)[16] has sponsored the major research on the strength of fillet welds. The research was directed at obtaining mechanical property data for sound (unflawed) fillet welds fabricated from various combinations of steel base metals and weld metals. For these welds, the minimum strengths exceeded the AISC-specified design strength by a factor of 3.8 for longitudinal fillet welds and 7.2 for transverse fillet welds. As a result, Higgins and Preece[17] later recommended that the design stresses be increased, since the factors of safety were grossly conservative. They specifically stated that the design stresses should be expressed as a fraction of the specified electrode (filler metal) tensile strength. The AISC code[18] was revised to implement their recommendations.

---

[9] A. W. Pense and R. D. Stout, *Influence of Weld Defects on the Mechanical Properties of Aluminum Alloy Weldments,* Welding Research Council Bulletin 152 (July 1970).

[10] F. V. Lawrence, Jr., and W. H. Munse, *Effects of Porosity on the Tensile Properties of 5083 and 6061 Aluminum Alloy Weldments,* Welding Research Council Bulletin 181 (February 1973).

[11] W. L. Green, M. F. Hamad, and R. B. McCauley, "The Effects of Porosity on Mild Steel Welds," *The Welding Journal,* Vol 37, No. 7 (1959), Research Supplement, pp 209s-306s.

[12] J. W. Bradley and R. B. McCauley, "The Effects of Porosity on Quenched and Tempered Steel," *The Welding Journal,* Vol 43, No. 9 (1964), Research Supplement, pp 408s-414s.

[13] F. V. Lawrence, Jr., J. B. Radziminski, and R. W. Kruzic, *The Effect of Porosity on the Static Tensile Behavior of High-Strength Structural Steel Weldments,* Civil Engineering Report No. UILU-ENG-71-2024 (University of Illinois, 1971).

[14] E. M. Honig, Jr., *Effects of Cluster Porosity on the Tensile Properties of Butt-Weldments in T-1 Steel,* Technical Report M-109/ADA004001 (CERL, 1974).

[15] E. M. Honig, Jr., and K. W. Carlson, "Tensile Properties of A 514 Steel Butt-Joints Containing Cluster Porosity," *The Welding Journal,* Vol 55, No. 4 (1976), Research Supplement, pp 103s-107s.

[16] T. R. Higgins and F. R. Preece, *AWS-AISC Fillet Weld Study–Longitudinal and Transverse Shear Tests* (AISC, May 1968).

[17] T. R. Higgins and F. R. Preece, "Proposed Working Stresses for Fillet Welds in Building Construction," *The Welding Journal,* Vol 47, No. 10 (1968), Research Supplement, pp 429s-432s.

[18] *Specification for the Design, Fabrication and Erection of Structural Steel for Buildings* (AISC, 1969), Table 1.5.2.1.

REFERENCES

Boiler and Pressure Vessel Code (American Society of Mechanical Engineers, 1974).

Bradley, J. W. and R. B. McCauley, "The Effects of Porosity on Quenched and Tempered Steel," *The Welding Journal,* Vol 43, No. 9 (1964), Research Supplement, pp 408s-414s.

Green, W. L., M. F. Hamad, and R. B. McCauley, "The Effects of Porosity on Mild Steel Welds," *The Welding Journal,* Vol 37, No. 7 (1959), 209s-306s.

Higgins, T. R. and F. R. Preece, *AWS-AISC Fillet Weld Study–Longitudinal and Transverse Shear Tests* (American Institute of Steel Construction, May 1968).

Higgins, T. R. and F. R. Preece, "Proposed Working Stresses for Fillet Welds in Building Construction," *The Welding Journal*, Vol 47, No. 10 (1968), Research Supplement, pp 429s-432s.

Honig, E. M., Jr., *Effects of Cluster Porosity on the Tensile Properties of Butt-Weldments in T-1 Steel*, Technical Report M-109/ADA004001 (Construction Engineering Research Laboratory [CERL], 1974).

Honig, E. M., Jr., and K. W. Carlson, "Tensile Properties of A 514 Steel Butt-Joints Containing Cluster Porosity," *The Welding Journal*, Vol 55, No. 4 (1976), Research Supplement, pp 103s-107s.

Kato, B. and K. Morita, "Strength of Transverse Fillet Welded Joints," *Welding Journal*, Vol 53, No. 2 (February 1974), Research Supplement, pp 59s-64s.

Lawrence, F. V. and E. P. Cox, "Influence of Inadequate Joint Penetration on Tensile Behavior of A 514 Steel Welds," *Welding Journal*, Vol 55, No. 5 (May 1976), Research Supplement, pp 113s-205s.

Lawrence, F. V., Jr., E. P. Cox, and E. M. Honig, Jr., *Influence of Heat Input and Lack of Penetration Length on Static Tensile Strength of High-Strength Structural Steel Weldments*, Technical Report M-135/ADA012730 (CERL, June 1975).

Lawrence, F. V., Jr. and W. H. Munse, *Effects of Porosity on the Tensile Properties of 5083 and 6061 Aluminum Alloy Weldments*, Welding Research Council Bulletin 181 (February 1973).

Lawrence, F. V., Jr., J. B. Radziminski, and R. W. Kruzic, *The Effect of Porosity on the Static Tensile Behavior of High-Strength Structural Steel Weldments*, Civil Engineering Report No. UILU-ENG-71-2024 (University of Illinois, 1971).

Mechanical Testing of Steel Products, Specification A 370 (American Society for Testing and Materials, 1975).

Pense, A. W. and R. D. Stout, *Influence of Weld Defects on the Mechanical Properties of Aluminum Alloy Weldments*, Welding Research Council Bulletin 152 (July 1970).

Radiographic Inspection; Soundness Requirement for Arc and Gas Welds in Steel, Military Specification MIL-R-11468 (ORD) (Department of Defense, 1951).

Specification for the Design, Fabrication, and Erection of Structural Steel for Buildings (American Institute of Steel Construction, 1969), Table 1.5.2.1.

Structural Welding Code, D1.1-75 (American Welding Society, 1975).

CERL DISTRIBUTION

West Point, NY 10996
ATTN: Dept of Mechanics
ATTN: Library

Chief of Engineers
ATTN: DAEN-ASI-L (2)
ATTN: DAEN-FEU
ATTN: DAEN-FESA
ATTN: DAEN-MCE-D
ATTN: DAEN-MCZ-S
ATTN: DAEN-RDL

Ft Belvoir, VA 22060
ATTN: Kingman Bldg, Library

USA-WES
ATTN: Library

USA Army Engineer District
- Buffalo
  - ATTN: Library
- Pittsburg
  - ATTN: Library
- Philadelphia
  - ATTN: Library
  - ATTN: Chief, NAPEN-D
- Savannah
  - ATTN: Library
  - ATTN: Chief, SASAS-L
- Jacksonville
  - ATTN: Library
  - ATTN: Const. Div
- Nashville
  - ATTN: Library
- St Louis
  - ATTN: Library
- Kansas City
  - ATTN: Library (2)
- New Orleans
  - ATTN: Library
  - ATTN: Chief, LMNED-DG
- Tulsa
  - ATTN: Library
- Albuquerque
  - ATTN: Library
- Japan
  - ATTN: Library
- Walla Walla
  - ATTN: Library
  - ATTN: Chief, Engr Div

US Army Engineer District
- Alaska
  - ATTN: Library
  - ATTN: NPADE-R

US Army Engineer Division
- Europe
  - ATTN: Technical Library
- New England
  - ATTN: Library
  - ATTN: Chief, NEDED-T
- South Atlantic
  - ATTN: Chief, SADEN-TS
  - ATTN: Library
- Huntsville
  - ATTN: Library (2)
  - ATTN: Chief, HNDED-CS
  - ATTN: Chief, HNDED-SR
- Lower Mississippi Valley
  - ATTN: Library
- Ohio River
  - ATTN: Library
  - ATTN: Chief, Engr Div
- North Central
  - ATTN: Library
- Missouri River
  - ATTN: Library (2)
- Southwestern
  - ATTN: Library
  - ATTN: Chief, SWDED-TM

Naval Facilities Engr Command
ATTN: Code 04
Alexandria, VA 22332

Port Hueneme, CA 93043
ATTN: Library (Code L08A)

Washington, DC
ATTN: Library of Congress (2)
ATTN: Dept of Transportation Library

Defense Documentation Center
ATTN: TCA (12)
Cameron Station
Alexandria, VA 22314

Engineering Societies Library
New York, NY 10017