AD-A068 619   BOEING COMMERCIAL AIRPLANE CO SEATTLE WASH   F/G 13/9

NEW CONCEPTS IN AIRCRAFT JOURNAL BEARINGS.(U)

AUG 78   W F LYNN   F33615-76-C-3098

UNCLASSIFIED   AFFDL-TR-78-97   NL

1 OF 1

AD
A068619

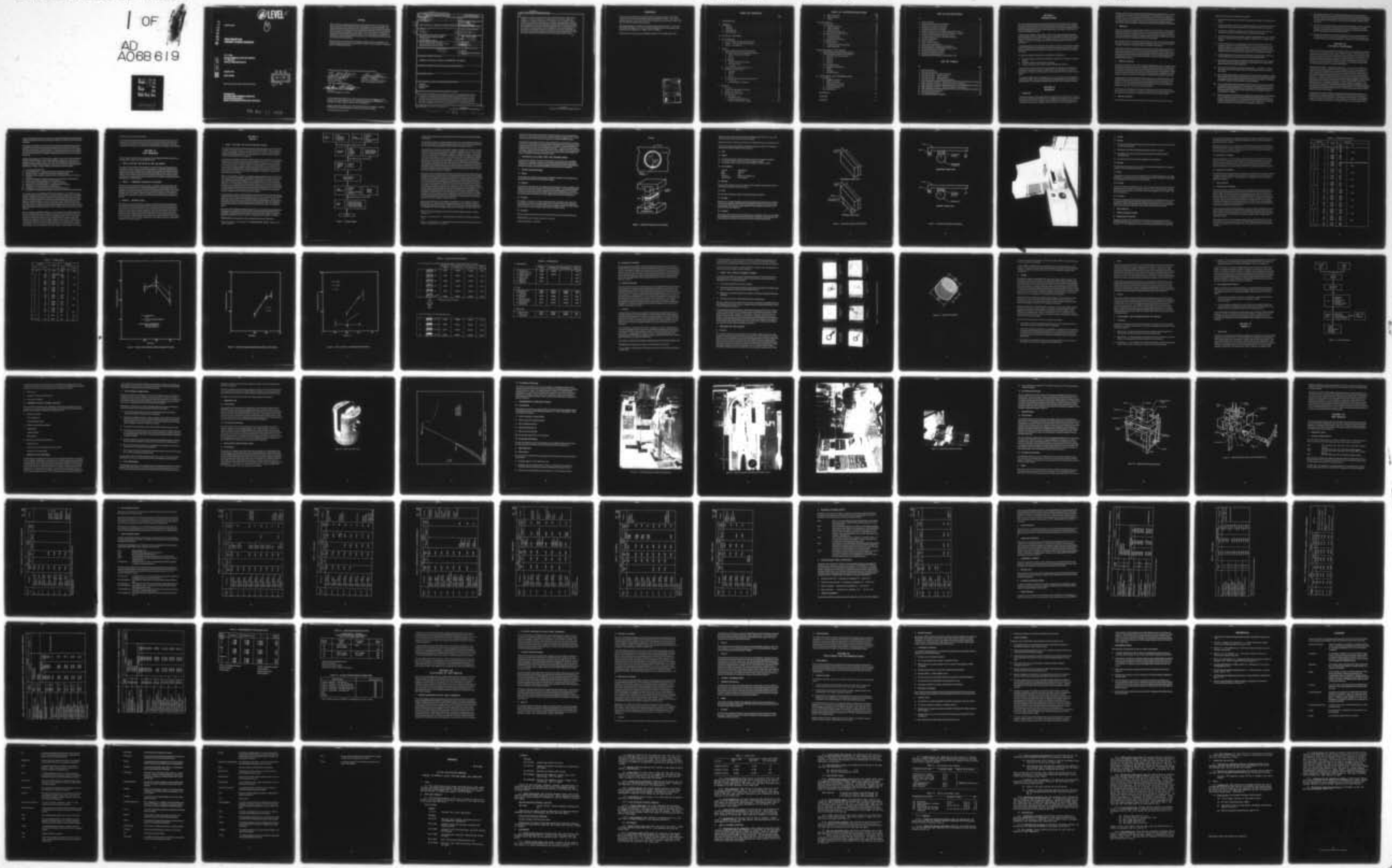

(4)

AFFDL-TR-78-97

NEW CONCEPTS IN AIRCRAFT JOURNAL BEARINGS

W. F. LYNN
BOEING COMMERCIAL AIRPLANE COMPANY
P. O. BOX 3707
SEATTLE, WASHINGTON 98124

AUGUST 1978

FINAL REPORT

Approved for public release; distribution unlimited.

PREPARED FOR
AIR FORCE FLIGHT DYNAMICS LABORATORY
UNITED STATES AIR FORCE
WRIGHT-PATTERSON AIR FORCE BASE, OHIO 45433

NOTICE

When Government drawings, specifications, or other data are used for any purpose other than in connection with a definitely related Government procurement operation, the United States Government thereby incurs no responsibility nor any obligation whatsoever; and the fact that the Government may have formulated, furnished, or in any way supplied the said drawings, specifications, or other data, is not to be regarded by implication or otherwise as in any manner licensing the holder or any other person or corporation, or conveying any rights or permission to manufacture, use, or sell any patented invention that may in any way be related thereto.

This report has been reviewed by the Information Office (OI) and is releasable to the National Technical Information Service (NTIS). At NTIS, it will be available to the general public, including foreign nations.

This technical report has been reviewed and is approved for publication.

KENNETH P. SCHWARTZ
Project Engineer
Mechanical Branch

Aivars Petersons
AIVARS V. PETERSONS
Actg Chief, Mechanical Branch
Vehicle Equipment Division

FOR THE COMMANDER

Ambrose B. Nutt
Director
Vehicle Equipment Division

"If your address has changed, if you wish to be removed from our mailing list, or if the addressee is no longer employed by your organization please notify AFFDL/FEM, W-PAFB, OH 45433 to help us maintain a current mailing list".

Copies of this report should not be returned unless return is required by security considerations, contractual obligations, or notice on a specific document.

AIR FORCE/56780/24 April 1979 — 450

Unclassified

SECURITY CLASSIFICATION OF THIS PAGE (*When Data Entered*)

⑱ ⑲ **REPORT DOCUMENTATION PAGE**	READ INSTRUCTIONS BEFORE COMPLETING FORM
~~1. REPORT NUMBER~~ AFFDL-TR-78-97	2. GOVT ACCESSION NO.
	~~3. RECIPIENT'S CATALOG NUMBER~~ ⑨
4. TITLE (*and Subtitle*) ⑥ NEW CONCEPTS IN AIRCRAFT JOURNAL BEARINGS.	~~5. TYPE OF REPORT & PERI~~OD COVERED FINAL REPORT. May 1976-August 1978
	~~6. PERFORMING ORG. REPORT~~ NUMBER
7. AUTHOR(*s*) ⑩ W. F. Lynn	8. CONTRACT OR GRANT NUMBER(*s*) ⑮ F33615-76-C-3098 new
9. PERFORMING ORGANIZATION NAME AND ADDRESS Boeing Commercial Airplane Company P. O. Box 3707 Seattle, Washington 98124	10. PROGRAM ELEMENT, PROJECT, TASK AREA & WORK UNIT NUMBERS ⑯ 2402/01-17 ⑰ 01
11. CONTROLLING OFFICE NAME AND ADDRESS Air Force Flight Dynamics Laboratory (FEMC) Wright-Patterson AF Base, OH 45433	~~12. REPORT DATE~~ ⑪ August 1978
	13. NUMBER OF PAGES 90
14. MONITORING AGENCY NAME & ADDRESS (*if different from Controlling Office*) ⑫ 99p.	15. SECURITY CLASS. (*of this report*) Unclassified
	15a. DECLASSIFICATION/DOWNGRADING SCHEDULE

16. DISTRIBUTION STATEMENT (*of this Report*)

APPROVED FOR PUBLIC RELEASE; DISTRIBUTION UNLIMITED

17. DISTRIBUTION STATEMENT (*of the abstract entered in Block 20, if different from Report*)

18. SUPPLEMENTARY NOTES

19. KEY WORDS (*Continue on reverse side if necessary and identify by block number*)

Composite
Journal bearing
Filament

20. ABSTRACT (*Continue on reverse side if necessary and identify by block number*)

An exploratory development and test program was conducted to establish optimum materials and designs for composite material journal bearings in aircraft joints between structural components of both advanced composite and conventional metallic materials. An initial study and design phase evaluated the characteristics of candidate composite materials as they apply to highly loaded bearings in adverse environments. A second phase involved fabrication and testing of journal bearing configurations. In the study and design phase,

DD FORM 1 JAN 73 1473 EDITION OF 1 NOV 65 IS OBSOLETE

Unclassified

SECURITY CLASSIFICATION OF THIS PAGE (*When Data Entered*)

390 145 79 05 11 022 LB

composites of epoxy resin reinforced with fibers of graphite, glass, TFE, and Kevlar were evaluated in corrosion, strength, and wear/life tests. Cost, relative weight, and suitability for commercial manufacture were considered. Also, suitability for direct substitution of composite journal bearings for currently used metallic journal bearings was a major program goal. Early testing indicated that graphite filament-reinforced composites lacked suitable friction and wear characteristics and were subject to edge breakdown due to pin bending and accepted degrees of joint misalignment. The best combination of characteristics was obtained in filament wound glass or Kevlar fibers impregnated with epoxy resins. Suitable wear/life and friction characteristics were obtained by incorporating TFE fabric or sprayed TFE-enriched resin liners in the composite journal bearings.

FOREWORD

This report was prepared by the Boeing Commercial Airplane Company, under USAF Contract F33615-76-C-3098, including subsequent Amendment Number 1. The work was administered under the direction of the Air Force Flight Dynamics Laboratory, FEMC, with Mr. K. P. Schwartz acting as Project Engineer.

The Program Manager for the Boeing Commercial Airplane Company was C. S. Carter and the Principal Investigator was W. F. Lynn. Other Boeing personnel who participated in this program were G. M. Walker, O. G. Wright, and J. W. VanWyk.

This report covers contract work accomplished from May 1976 through August 1978.

TABLE OF CONTENTS

TABLE OF CONTENTS (CONCLUDED)

LIST OF ILLUSTRATIONS

LIST OF TABLES

SECTION I
INTRODUCTION

The use of composite materials in airframe structures has the potential for more efficient, improved performance aircraft, due to the high strength-to-weight ratio of the composites. Investigation and development of the interfacing between the advanced composite structure and the attaching hardware at highly loaded pinned joints is necessary to fully utilize the potential of composite structure.

In state-of-the-art design of both metallic and advanced composite material structures, metallic bearings are used at load-transfer points as replaceable, sacrificial elements with selected functional characteristics. For composite structure, such bearings add excessive weight, are conducive to corrosion, and introduce design problems of retention and replacement.

A promising approach to the solution of these problems is the use of nonmetallic composite inserts acting as bearings in functional joints between composite structures. Such a system averts the metallic corrosion problems and minimizes the overall weight and complexity of the joint.

To define the adequacy of this solution, a program was established to:

- determine optimum materials and fabrication techniques for nonmetallic composite bearings
- investigate retention and replacement techniques
- explore performance characteristics against established requirements.

The performance standards selected for the test phase of the program are essentially the qualification requirements defined in MIL-B-81934. This specification controls the procurement of airframe structural journal bearings using TFE liners in metallic backup sleeves.

An obvious corollary effort to investigate the use of the composite journal bearings in conventional metallic structures was included in the original program. A later addition was the adaptation of the composite journal bearing as the outer race of a spherical bearing.

SECTION II
SUMMARY

1. OBJECTIVE

The primary objective of this program was the acquisition of the necessary data to provide reinforced composite journal bearings for use in lightweight, corrosion-free load and motion transmitting joints between composite and/or metallic aircraft landing gear structural components. The general performance of these bearings was to be comparable to the load/life requirements of bearings specified in MIL-B-81820 and MIL-B-81934. In the case of application to metallic structures, the geometry was established as that defined in MIL-B-81934/1 so as to permit design improvement by direct retrofit in existing aircraft. A further objective was the application of the materials data and processing techniques for the composite journal bearings to outer races of plain spherical bearings capable of performance to the requirements of MIL-B-81820 and meeting the geometry of MS14101.

2. APPROACH

A literature search and material properties evaluation constituted Phase I of this program. Materials specimens were fabricated in-house or procured from various other sources, in geometries suitable for strength, friction, wear, and environmental testing. From these studies and evaluation of test data, promising candidate composite materials were selected for evaluation in sleeve bearing form in Phase II of this program.

One-inch-diameter by 1/2-inch-long sleeve bearings were used as test specimens in Phase II. This specimen geometry permitted realistic installation, retention, and environmental resistance evaluation, as well as static-load and wear-life-friction testing.

It was observed that spherical bearing outer race geometry rather closely approximates our sleeve bearing specimen geometry. The original sleeve-bearing-oriented program was extended to evaluate the use of reinforced composite materials to fabricate outer races for spherical self-lubricated bearings. Testing was limited to those bearing characteristics that are significantly affected by the geometry differences between a sleeve bearing and a spherical bearing outer race.

3. GENERAL RESULTS

The results of this program show that nonmetallic filament-wound epoxy composite journal bearings are suitable for use in advanced composite airframe structures. They will provide an advantageous design alternative to the metal-backed, TFE-fabric-lined journal bearings in current use and procured to MIL-B-81934. Advantages offered include significant weight reduction, freedom from both chemical and electrolytic corrosion, adaptability to current sizing and retention techniques, and a probable cost advantage for production quantities.

Filament-reinforced composite journal bearings can be used in conventional state-of-art metallic airframe structure with little, if any, modification required to provide for the change from TFE-lined metallic journal bearings. Potential has been demonstrated for adaptation of the composite bearing concept to fabrication of outer races for TFE-lined spherical bearings, such as those covered by MIL-B-81820.

A need has been demonstrated for process and material controls to obtain consistency in the performance characteristics of composite bearings. Present manufacturing techniques do not permit the manufacture of composite journal bearings with integral flanges.

4. SPECIFIC RESULTS

The following specific results were developed from analysis of the information and data obtained in the study and test phases of this program.

1) Filament-reinforced epoxy materials have adequate static strength for airframe journal design.

2) Optimum strengths are obtained by winding filamentary yarns, rather than by random chopped-fiber reinforcement in molded parts or winding of tapes or woven fabrics.

3) Treatment by antifriction additives to the composite resin does not produce the desired friction and wear life characteristics and reduces static strength.

4) Antifriction and wear life characteristics consistent with MIL-B-81934 can be obtained simply by using liners that have been qualified to MIL-B-81934 in metallic journal bearings.

5) Excellent performance was demonstrated by both woven TFE-fabric liners and a proprietary sprayed and cured TFE-enriched resin liner. The sprayed liner has the additional capability of accepting line-reaming or boring after installation. This simplifies optimum fitup and alignment with the other joint elements. Note, however, that fabric liners are currently being successfully used in metallic journal bearings.

6) Graphite filament-reinforced parts have little tolerance for edge loading, whether due to pin misalignment or to pin bending under the required high loading.

7) Suitable parts can be fabricated by filament winding either glass fiber yarns or Kevlar fiber yarns. Production facilities originally set up for glass fiber can satisfactorily handle Kevlar with only minor adjustments.

8) Parts made with Kevlar fibers have lower specific gravity – and weight – than parts made with any of the other fibers evaluated. All comparisons used the same epoxy resin system.

9) Three bearing manufacturing companies have production facilities for filament winding glass composite journal bearings. These facilities are capable of handling Kevlar. Several companies have either molding capabilities for various reinforced plastic formulations for journal bearings or laboratory filament winding capability.

10) Two of the three best products evaluated had fabric liners and each were the product of individual bearing manufacturers. The third product was filament wound by one of the above two bearing manufacturers and was lined by a third bearing manufacturer. This last product was the only one that would tolerate any significant degree of machining after installation.

11) Adequate journal bearing retention was obtained by use of interference fits of the same order of magnitude as is used for metal journal bearings. Higher push-out values, if necessary, can be obtained by use of cast-in-place resin retaining rings. This technique requires premachined grooves and push-out values can be adjusted by the size and number of the grooves and by selection of an appropriate casting resin.

12) Contaminant toleration of the composite journal bearings is better than that of MIL-B-81934 metal journal bearings. This is attributed to the relatively high degree of interaction between liner and backup achieved in the fabrication process, as opposed to the secondary step of bonding in a fabric liner after machining a metallic ring for the backup.

13) Corrosion is not a problem when the composite journal bearings are used in composite structure. A typical joint would have only the pin and its fastening of metallic materials. These parts are typically CRES or are protected by plating and would be electrolytically isolated by the nonmetallic TFE liner.

14) Corrosion is minimized when composite bearings are used in a metallic structure. In a typical joint, at least one source of dissimilar metal corrosion is eliminated and conventional protective treatments, platings, or coatings can be used on the structure.

SECTION III
TECHNICAL DISCUSSION

Many of the bearings used in contemporary military aircraft can be classified by application and function as "structural bearings." These bearings are used at connection points of the various structural subsystems of the airframe such as the landing gear, wing flaps, and other wing control surfaces, and movable empennage control surfaces. Characteristically, loads are high and motion is oscillatory, usually not exceeding 90 degrees of arc. Much of the flight life of these bearings is under relatively small loads and vibration plus small angles of excursion. Such an environment can quickly destroy a typical rolling element bearing by fretting and breakdown of the essential lubricant film.

Typically, plain bearings – both spherical and journal – have proven to be optimum for airframe structural bearing applications. Plain bearings are used because of high load capacity within rather tight geometry constraints and good resistance to both liquid and solid contaminants normally present in the use and maintenance of the aircraft. Many of the structural bearings in the present generation of aircraft, such as those used in landing gear joints, are TFE-fabric-lined to improve friction and wear characteristics. Such journal bearings are covered by MIL-B-81934, "Bearings, Sleeve, Plain and Flanged, Self-lubricating". Plain spherical TFE-fabric-lined bearings are covered by MIL-B-81820 and are used in applications where a misaligning capability is a design requisite. Advantages of the TFE-fabric-lined bearings over the grease-film-lubricated bearings include higher operating load capability, freedom from periodic lubrication maintenance, low friction that minimizes transmitted moment loading between structures, and good performance within the rather hostile environment of the aircraft.

Unfortunately, these highly developed and standardized TFE-lined plain bearings are not suitable for use in the next generation of military aircraft with much of the structure to be advanced carbon filament-reinforced composite materials. Presently used bearings are metallic and promise unacceptable corrosion problems in combination with graphite structures. Titanium may prove to be an exception, although it is not presently covered in existing bearing specifications. In addition, the metallic bearings and attaching hardware weight are inconsistent with the high strength-to-weight ratio attainable with the advanced composites.

This program was initiated to explore and develop alternative bearing hardware solutions compatible with the advanced composite structures and with the load capability and functional characteristics of existing metallic TFE-fabric-lined bearings. It was projected that a satisfactory bearing solution would have excellent potential for use in the metallic structure of existing aircraft as a significant weight-reducing measure both for replacement and retrofit.

Outlining and bringing into focus the overall challenge was in order. Journal bearings were initially considered because of the simple geometry. Landing gear structural joint applications were of specific interest, with other similar applications approached more generally. The MIL-B-81934 performance for load, life, and functional characteristics was established as a target. A listing of design and operational constraints includes:

1) Geometry per MIL-B-81934
2) Load capability high – consistent with aircraft landing gear applications
3) Minimum weight – consistent with advanced composite structure
4) Friction low and consistent to minimize effect of transmitted torque on structural members
5) Service life sufficient to minimize maintenance and downtime for replacements
6) Freedom from frequent periodic service and inspection
7) Freedom from catastrophic failure, i.e., seizure due to galling
8) Elimination of corrosion problem – specifically galvanic corrosion
9) Resistance to aircraft environmental contamination
10) Suitability for use in metallic structure as a weight-saving measure
11) Adaptability to installation and retention using conventional methods and techniques

It is evident that the present MIL-B-81934 journal bearings are not suitable for use in advanced composite structure because of galvanic corrosion problems and a high weight penalty. Titanium offers both lower weight and freedom from corrosion problems. With a bonded-in self-lubricating liner to overcome friction and galling characteristics, titanium offers an acceptable solution. As with other metal journal bearings with bonded-in TFE-fabric liners, the titanium journal bearings will require very tight material and processing controls to resist attack on the sharply defined bondline by aircraft environment liquid contaminants. Suitable simple seals are not available and would compromise joint geometry.

The use of regularly replenished lubricants, i.e., oil or grease, was considered undesirable because of the maintenance time required for the large number of bearings involved and because of the geometry effect on both the composite structure and on the bearings. Lubrication fittings and passages in the composite structure introduce design and manufacturing problems and would highly complicate stress analysis. Load-carrying capability and fatigue life would be adversely affected to an unknown degree. Long-time compatibility of the lubricants with composite structure is unknown. Journal bearing manufacturing would be complicated and costs increased by the addition of a lubricant distribution system of grooves and holes.

It was decided that the approach to the problem with the most potential was the use of a nonmetallic self-lubricating composite journal bearing. This approach offers minimum weight and direct solution to the galvanic corrosion problems. This report covers the investigative, development, and testing effort to demonstrate the feasibility of this approach.

SECTION IV
TEST PROGRAM

The test program was divided into two separate but interdependent phases, preceded by a literature study, analysis, and a state-of-the-art survey.

1. STUDY, ANALYSIS, AND STATE OF THE ART SURVEY

An analysis of the objectives of this program was made to define and contextually place all necessary work for optimum results. This included an overall plan starting with an evaluation of existing art, leading into candidate material testing, and finally into journal bearing configuration hardware testing. Available materials, hardware, and fabrication techniques were evaluated against the defined program objectives. In addition, bearing companies were surveyed and provided information that was helpful in avoiding false starts and repetitive or redundant effort.

2. PHASE I – COMPOSITE MATERIALS EVALUATION

This phase included static and dynamic testing of candidate composite materials. The purpose was to establish which of the available materials were most suitable to meet the program requirements when used in heavily loaded airframe journal bearings. The specimen geometry and testing were devised to permit economical evaluation of a large number of materials under the complex restrictions imposed by the intended end use. Only those materials were evaluated that could be successfully fabricated into geometry suitable for Phase II.

3. PHASE II – BEARING TESTS

This phase involved static and dynamic testing of 1-inch-bore journal bearings fabricated from candidate materials. Those specimens with the best performance were subjected to all of the tests cited in MIL-B-81934 for service qualification of TFE-fabric-lined journal bearings. Molded parts with random orientation of the fiber reinforcement were tested in addition to various filament-wound fabrications. Both types were tested with various lubricating liners including sprayed liners, molded liners, fabricated-in-place liners, and fabric sleeve liners. Unlined specimens were also tested to evaluate addition of TFE powder to the composite in order to achieve a high degree of homogeneity and avoid a well-defined bondline as a potential failure site.

SECTION V
PHASE I

1. STUDY, ANALYSIS, AND STATE-OF-THE-ART SURVEY

The initial effort was made to define the materials evaluation program in accordance with the Statement of Work. Figure 1 is an outline of the projected Phase I effort. A literature search was undertaken to establish the current state of art on the physical properties, availability, fabrication experience, cost, and suitability in airframe journal bearings of a number of fiber-reinforced resin composites.

The properties considered were based on design requirements as defined in current airframe design as well as in future advanced composite airframe structure. The current military specification for TFE-lined journal bearings was selected as a guide and goal for strength and wear performance.[1] Corrosion resistance was placed high on the requirements list since presently available metallic journal bearings fall far short in this regard for use in advanced structural graphite fiber composites. Installation and retention were considered since, ideally, it was desired to use current techniques for installation, retention, and replacement of these bearings.

Primary initial emphasis was placed on composites utilizing graphite filament reinforcement due to the obvious compatibility with graphite-reinforced structure. Some authors state that "graphite reinforced thermoplastics are cost competitive to conventional bearing materials"[2], while most indicate higher costs for graphite fiber than for other reinforcing fibers, such as "E"-glass. Based on past experience, however, with a number of composite programs, it was determined that both material and fabrication costs were sufficiently high to make graphite composite bearings much more expensive than lubricated or lined journal bearings. It must be noted, however, that this price trend is downward as manufacturing expertise is gained and as more material becomes available.

It was found that a number of manufacturers were making reinforced resin journal bearings, utilizing several techniques. Several molding processes were in use, employing both chopped fibers and fabrics in various resins including phenolics, nitrile-phenolics, epoxies, and polyimides. Another process in use involves the winding of glass filament yarns impregnated with an epoxy resin to form tubular layups that are subsequently cured and machined to final dimension. Details of these manufacturing techniques are usually of a proprietary nature.

Since some of the presently available products were in use in aircraft structural applications, the design risk was minimized. It was also evident that a more general knowledge of the capabilities and limitations of these products was required before broader use and more sophisticated application could be made of composite journal bearings. In addition,

---

[1] Military Specification, "Bearings, Sleeve, Plain and Hinged, Self-Lubricating," MIL-B-81934.

[2] Long, W. C., Stafford, D. K., and Long, L. A.: *Graphite/Thermoplastic Bearings: State-of-the Art,* Babcock & Wilcox Co.

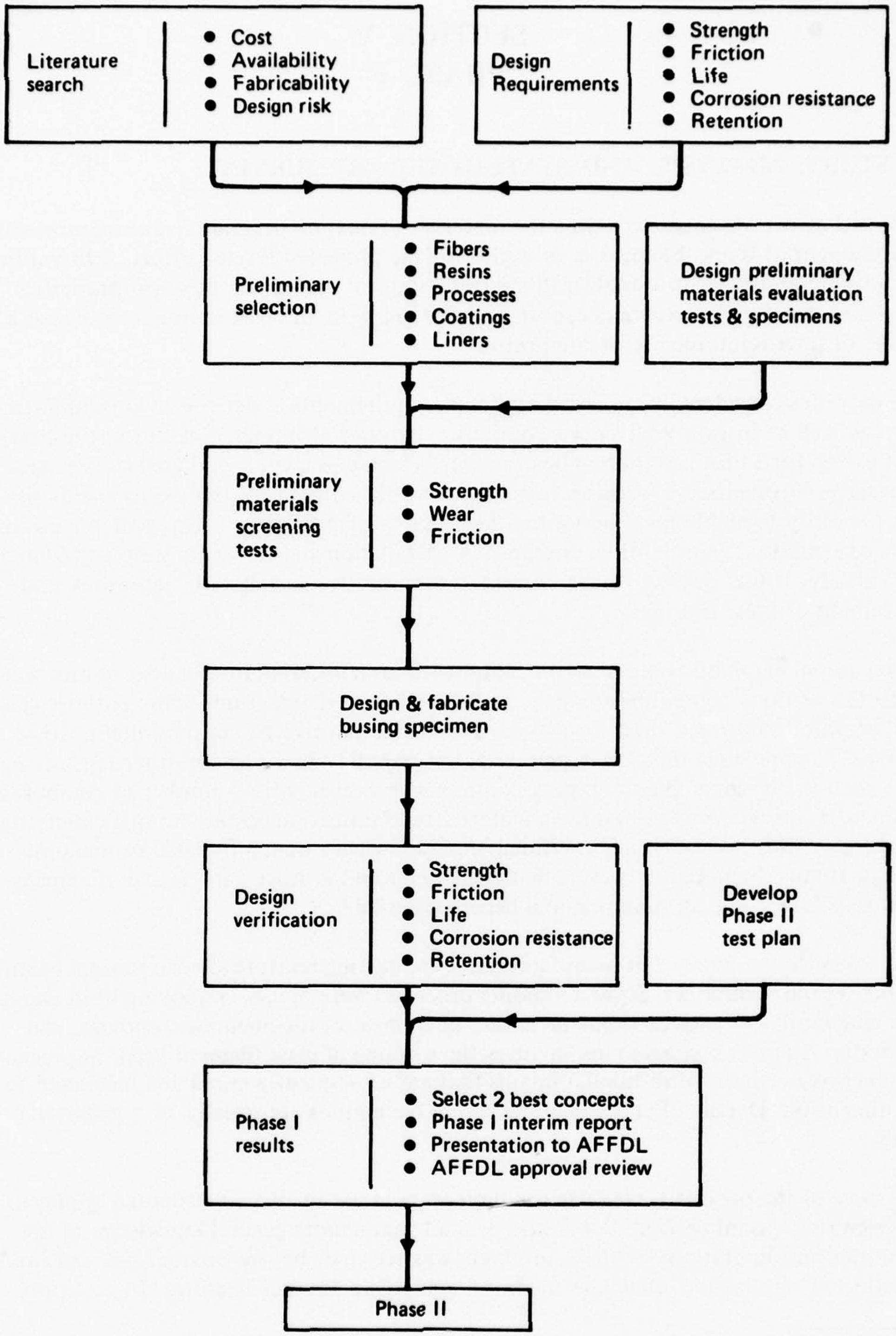

Figure 1. – Outline of Phase I

evolutionary development was necessary before these bearings could optimally fill design requirements.

The literature describes two different graphite fibers. Type 1 has the higher modulus than Type II, while Type II has the higher tensile strength. Type I fibers were selected since they had more than adequate strength and generally better frictional properties[2, 3].

It was decided to consider fiber materials, in addition to graphite, for a number of reasons. Evaluation of previous work indicated that graphite composite was not a good material choice for journal bearing applications in advanced composite structures – the primary concern of this program. The reported coefficient of friction for graphite thermoplastic composites ranges from 0.2 to 0.35[4], and is always above that of the TFE-liners available in currently used military standard bearings[5]. The graphite composites demonstrated brittle fracture edge break-down when loaded as with a misaligned or deflecting pin. Material and processing costs were high with a rather low base of manufacturer experience and capability in fabricating hardware. A secondary program consideration was the use of composite journal bearings in conventional metallic aircraft structure. Since previous work has shown graphite to be more noble than the current structural aircraft metals, a serious electrolytic corrosion problem was indicated.

Based on the above discussion, glass and Kevlar were additional fiber materials selected for consideration. Each of these materials, in combination with epoxy resins, showed excellent promise for journal bearing use under the considerations of both the primary and secondary objectives of this program. Glass was selected because of a broad base of experience in its use, existing manufacturing capability, and manufacturers' data indicating compliance with most of the requirements of MIL-B-81934. These factors indicated both low cost and low design risk. Similarly, indications were that Kevlar could be processed on existing journal bearing manufacturing equipment. In addition, Kevlar is somewhat lighter than glass and has higher strength potential in a filament wound geometry. Accordingly, it was determined that glass and Kevlar could be used to meet the primary program objectives. In addition, journal bearings of these materials did not present an electrolytic corrosion problem when used with metals and are sufficiently inert to resist attack by the liquid contaminants associated with the use and maintenance of military aircraft, thus showing promise to answer the programs secondary objectives.

Since the frictional base for this program is equivalency to the TFE-lined bearings of MIL-B-81934, it is obvious that the frictional properties of the filament reinforced composite bearings must be improved. To this end, it was decided to include evaluation of TFE additives, low friction coatings, bonded and woven-in-place TFE fabric liners, and

---

[3] Giltrow, J. P.: *A Design Philosophy for Carbon Fibre Reinforced Sliding Components,* Tribology, February 1971.

[4] Geltrow, J. P., and Lancaster, J. K.: "Carbon-Fibre Reinforced Polymers as Self-Lubricated Materials," 1968.

[5] Sliney, H. E., and Johnson, R. L.: "Graphite-Fiber Polyimide Composites for Spherical Bearings to 340° C (650° F)," NASA TN D-7073, November 1972.

sprayed liners. Epoxy resins were selected as the basic matrix due to the manufacturing experience of the bearing manufacturers, relatively simple processing and low cost, and adequate strength characteristics as demonstrated by currently available products.

As adaptation to existing aircraft was a major consideration, it was decided not to depart from current design practice in selecting materials and geometries for pins mating with the composite journal bearings. This design practice is detailed in Airframe Manufacturers' Design Manuals and in the Air Force Design Handbook[6, 7]. Specific pin design practice consisted of using corrosion-resistant shafts or bolts, when available in the appropriate sizes and strength ranges and the use of heat-treated aircraft steels, plated with chromium and ground to appropriate tolerances and surface texture.

2. MATERIALS EVALUATION TESTS AND SPECIMEN DESIGN

Having selected candidate materials for this program, our next task was to establish procedures for preliminary evaluation of material strength characteristics and bearing properties tests. This effort involved specimen geometry design as well as establishing test procedures consistent with available capabilities, experience, and test equipment.

a. Ultimate Compression Strength

(1) Purpose

To investigate the strength characteristics of candidate materials in the geometries and thicknesses representing use in aircraft sleeve bearings.

(2) Specimen

The geometry of this specimen was intended to be representative of the most highly loaded element of an aircraft sleeve bearing. This is illustrated in figure 2. All candidate composite materials were subjected to this test. Specimens were sized by grinding to 1 inch long by 1/2 inch wide. Three thicknesses were tested, approximately 0.060, 0.090, and 0.125 inch. These thicknesses were selected to cover the range used in aircraft sleeve applications.

(3) Procedure

The specimen is retained in a female compression block and loaded with a male block. The assembly is placed in a universal testing machine to permit accurate load application and determination. The heat-treated steel blocks are designed to provide the lateral restraint and end freedom of the most highly loaded element of a sleeve bearing.

(4) Comments

Previous analogous testing of bronze and corrosion-resistant steel always showed that the

---

[6] "Boeing Design Standards," D-5000, vol 81B3, sec. 510 and 520.

[7] AFSC Design Handbook," AFSC DH2-1,

Test setup:

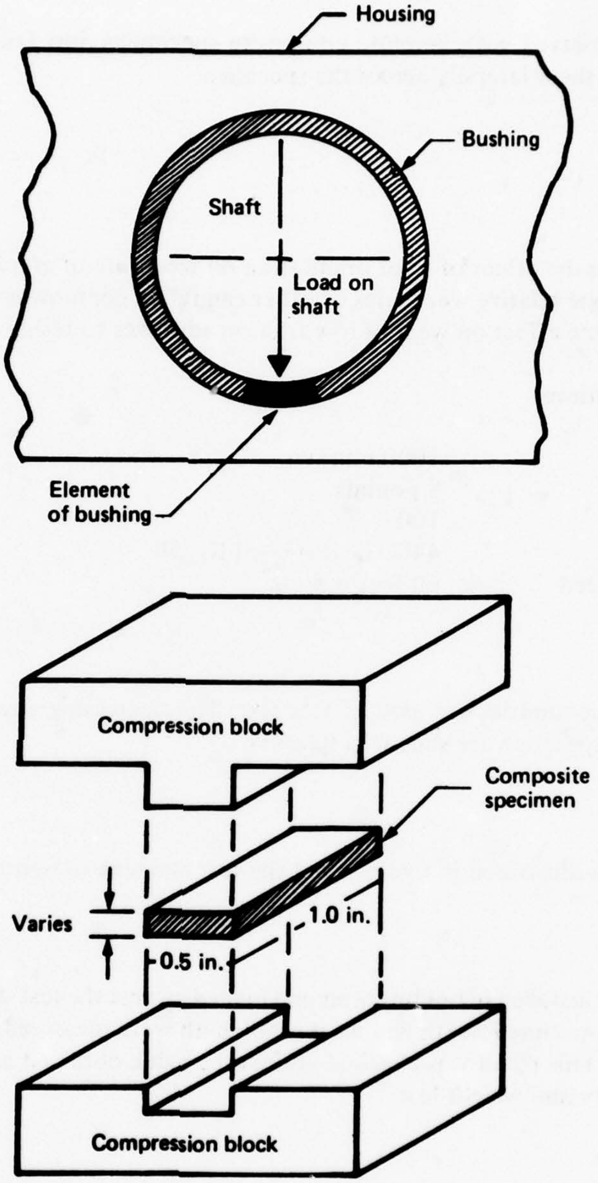

Figure 2. – Strength Test Specimen and Load Blocks

thinner sections could transmit the highest compression loads. This is not true of the composites tested within the thickness range evaluated.

Results were taken as initial fracture indicated as a significant break in the load-strain curve.

No yield was observed with graphite composite specimens, but failure was brittle and showed internal shear laterally across the specimen.

b. Wear

(1) Purpose

1) To evaluate the effect of fiber orientation on wear rate of graphite composites
2) To determine relative wear rates of other candidate composites
3) To determine effect on wear of low friction additives to resin or as fibers

(2) Test Conditions

Duration – 1000 minutes
Load – 8 pounds
RPM – 100
Test Shaft – 440C heat treated R_C 58
Surface Speed – 60 feet/minute

(3) Specimen

Two specimen geometries are used in this test. The decreasing stress specimen and the constant stress specimen are shown in figure 3.

(4) Setup

The test setup is illustrated in figure 4 and the test machine in figure 5.

(5) Procedure

Specimens were installed in holding arms and loaded against the test shaft. At the conclusion of the test, the specimen width and wear scar length were measured and the wear volume was computed. This result was checked against the value obtained as the product of the specimen density and weight loss.

(6) Comments

The constant stress level tests were abandoned early in the program. They were not found to produce significant additional data for screening tests. In addition, accurate specimens and test readings are more difficult to obtain than with the varying stress specimens.

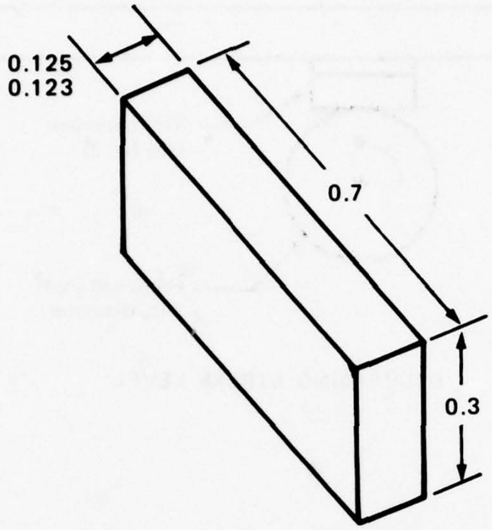

DECREASING STRESS LEVEL

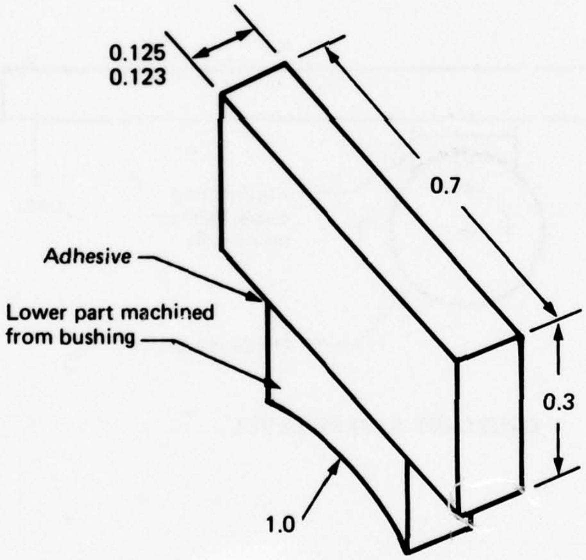

CONSTANT STRESS LEVEL

Figure 3. – Preliminary Screening Test Specimens

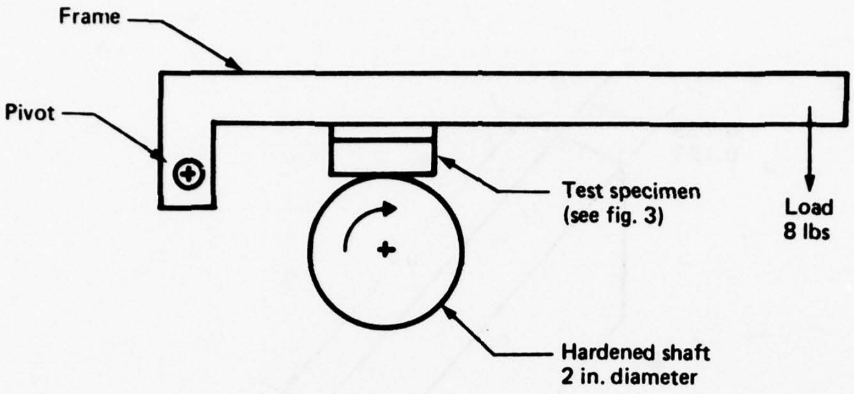

DECREASING STRESS LEVEL

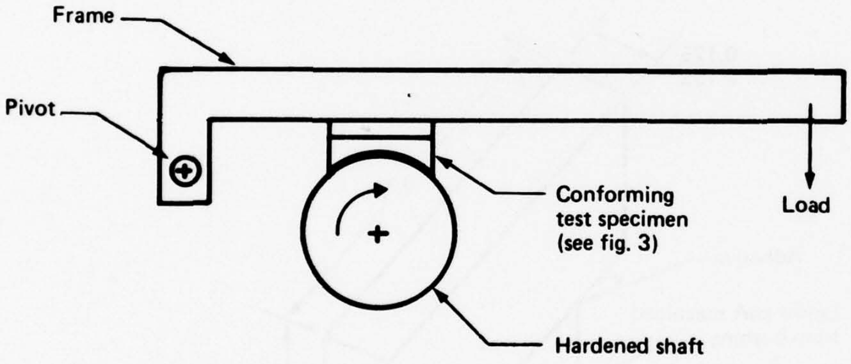

CONSTANT STRESS LEVEL

Figure 4. – Preliminary Screening Test Apparatus

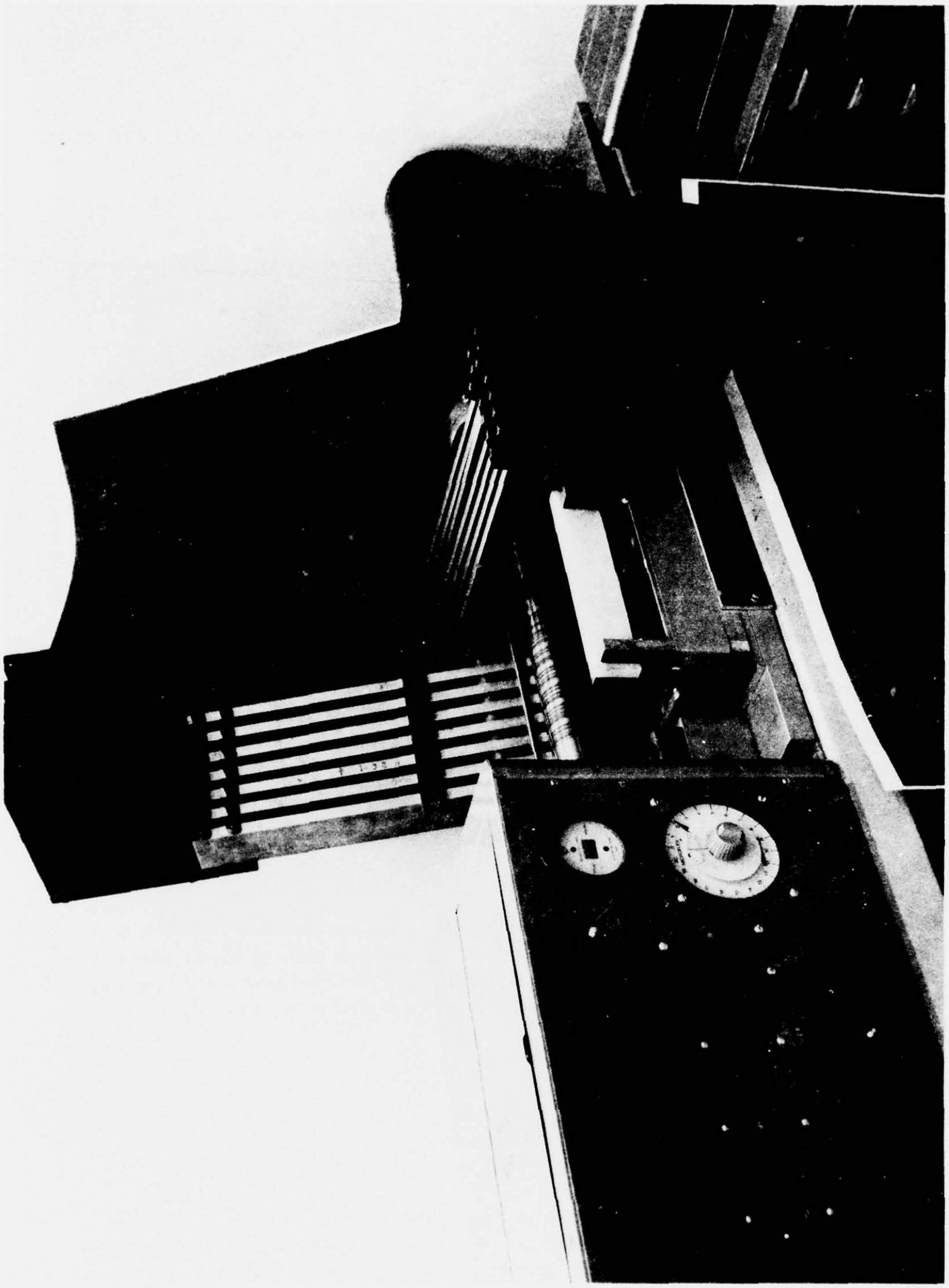

Figure 5. Bearing Materials Wear Test Machine

corrosion resistant steel and titanium. Some attack on the 17-4PH was evident while there

c. Friction

(1) Purpose

1) To determine frictional characteristics of the basic graphite composite and the effect of various fiber orientations

2) To determine the relative frictional characteristics of other composites

3) To establish, as a basic goal, the frictional characteristics of the MIL-B-81820 TFE-fabric liners

4) To evaluate the effect of low friction additives to the composites

(2) Specimen

The decreasing stress specimen shown in figure 3 was used for determination of coefficient of friction at the conclusion of the wear test.

(3) Setup

The apparatus of the wear test shown in figures 4 and 5 was used. The apparatus was simply modified by uncoupling the test shaft and adding a tension device that applies a measurable force tangential to the circumference of the test shaft.

(4) Procedure

Tests were performed on specimens, in situ, at the end of the wear test. The load on the test apparatus arm was increased to 20 pounds to improve accuracy. The coefficient of friction for the specimen was simply the ratio of the tension force tangential to the test shaft to the load on the specimen.

(5) Comments

Several more sophisticated friction determining techniques were available. However, each of them required either a separate, different geometry specimen or removal of our wear test specimen to a different test apparatus. The technique used provided a friction measurement of the specific and precise specimen-to-shaft interface produced in the wear test.

3. TEST RESULTS

a. Ultimate Compressive Strength

(1) Graphite/Epoxy Composites

Specimens identified as B-14 and B-14T were fabricated by laying up plies of Narmco T300/5208 tape with Hexcel F-161, a 350° F cure epoxy resin. Alternate plies were rotated to achieve a 0° to 90° alignment. After layup to the desired thickness and cure, specimens were machined by grinding to the desired dimensions. TFE fabric was bonded to one face of the B-14T specimens. Results of testing are tabulated in Table 1, and the comparison is graphically presented in figure 6.

Specimens identified as E-1 were fabricated using Hexcel F-161 epoxy resin and Fiberite W-133 graphite fabric. Specimens identified as E-2 were identical to the E-1 specimens except that one part of TFE powder was added to four parts of resin. Test results are tabulated in Table 1 and graphically presented in figure 7.

(2) Kevlar/Epoxy Composites

Specimens identified as D-33 were laid up using Fiberite Kevlar fabric Style W-107 and Hexcel F-161 350°F cure epoxy resin. One part of TFE powder was added to four parts of resin. Specimens identified as D-34 were laid up using Fiberite W-107 fabric, with 50% graphite yarns and 50% Kevlar yarns in both warp and fill, and Hexcel F-161 350°F cure epoxy resin. Results of testing are tabulated in Table 1 and presented graphically in figure 8.

(3) Miscellaneous Composites

These specimens were fabricated in three thicknesses by molding from a proprietary material consisting of chopped reinforcing fibers and TFE in an epoxy resin. The specimens are identified as K-19 through K-27. The strength data are tabulated in Table 1 and shown graphically in figure 8.

b. Wear and Friction

(1) Graphite/Epoxy Composites

Specimens for these tests were fabricated by first making a relatively massive layup of Narmco T300/5208 graphite fiber tape and Hexcel F-161 350°F cure epoxy resin with all fibers parallel. After curing, specimens were machined in such a way as to provide six different angles of fiber orientation to the longitudinal direction of the specimens. Fiber direction orientation to the specimens is illustrated in Table 2. This figure also tabulates the test data, which include the incremental weight loss during the test, the computed coefficient of friction from the torsional resistance, and values of wear volume computed from both the weight loss and the dimensions of the wear scar. These tests evaluating fiber orientation are identified as A-1 through A-6.

Additional tests, identified as B-11 through B-14, were run to further investigate the effect of fiber orientation. Specimens for these tests were fabricated of the same Narmco tape and Hexcel resin, but each ply of the tape was rotated 90° from the preceding ply in the layup. These tests were run on four different wear path orientation angles, as illustrated and tabulated in Table 2.

Specimens for test E-1 were fabricated by laying up plies of Fiberite W-133 fabric with Hexcel F-161 resin. Specimens for test E-2 were similarly fabricated, but one part of TFE powder to four parts of resin was added. Data on these tests are included in the tabulation in Table 2.

TABLE 1. – STRENGTH TEST DATA

Specimen		Thickness (in.)	Stress (ksi)	
Ident.	Number		At Failure	Ave.
B – 14	1	0.125	104	
	2	0.125	88	
	3	0.125	88	93.0
	4	0.090	128	
	5	0.090	164	
	6	0.090	118	136.7
	7	0.060	188 (not used in average, initial indication missed)	
	8	0.060	140	
B – 14	9	0.060	128	134.0
B – 14T	10	0.143	96	
	11	0.138	110	
	12	0.142	136	114.0
	13	0.107	150	
	14	0.106	137	
	15	0.111	156	147.7
	16	0.076	122	
	17	0.076	133	
B – 14T	18	0.077	121	125.3
E – 2	39	0.062	37.6	
	40	0.062	39.0	
	41	0.061	35.8	37.5
	42	0.090	80.0	
	43	0.091	94.8	
	44	0.091	89.6	88.1
	45	0.103	87.0	
	46	0.103	87.2	
E – 2	47	0.103	99.0	91.1
D – 34	48	0.062	40.0	
	49	0.061	44.0	
	50	0.059	47.0	44.0
	51	0.091	85.4	
	52	0.091	82.4	
	53	0.092	86.4	84.7
	54	0.103	100.8	
D – 34	55	0.103	76.8	

TABLE 1. – (CONCLUDED)

Specimen		Thickness (in.)	Stress (ksi)	
Ident.	Number		At Failure	Average
D – 34	56	0.103	102.8	93.5
K – 1	K19	(damaged, not used)		
	K20	0.032	24.6	
	K21	0.032	12.8	18.7
	K22	0.062	10.0	
	K23	0.062	14.8	
	K24	0.063	19.2	14.7
	K25	0.093	16.6	
	K26	0.093	17.0	
K – 1	K27	0.093	16.6	16.7
E – 1	28	0.061	45.6	
	29	0.061	44.4	
	30	0.061	40.0	43.4
	31	0.090	87.4	
	32	0.090	87.7	
	33	0.090	83.1	86.1
	34	0.103	84.2	
	35	0.103	101.1	
E – 1	36	0.103	85.1	90.1
D – 33	37	0.061	24.8	24.8
D – 33	38	0.091	45.4	45.4

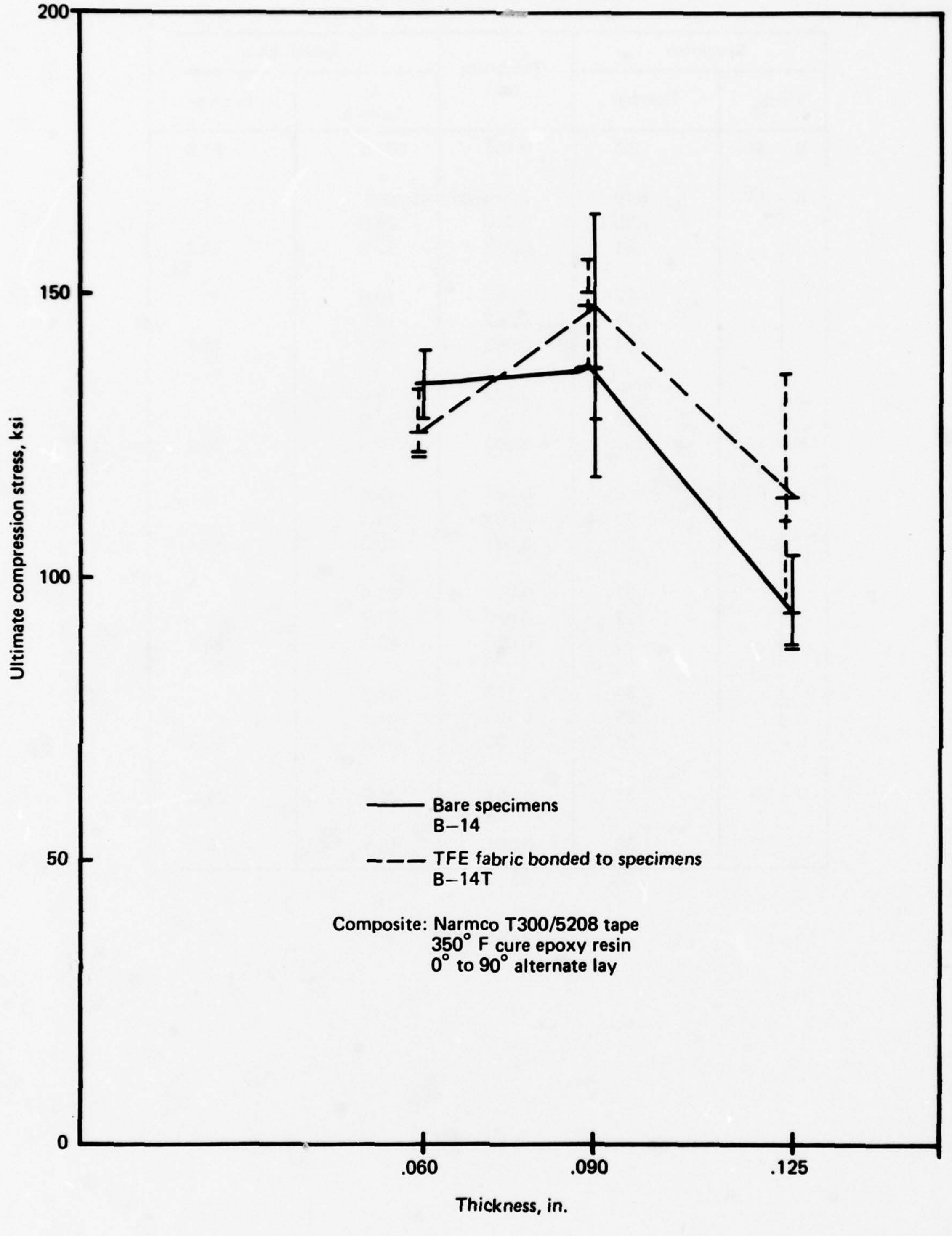

Figure 6. – Graphite Composite With and Without Bonded TFE Fabric

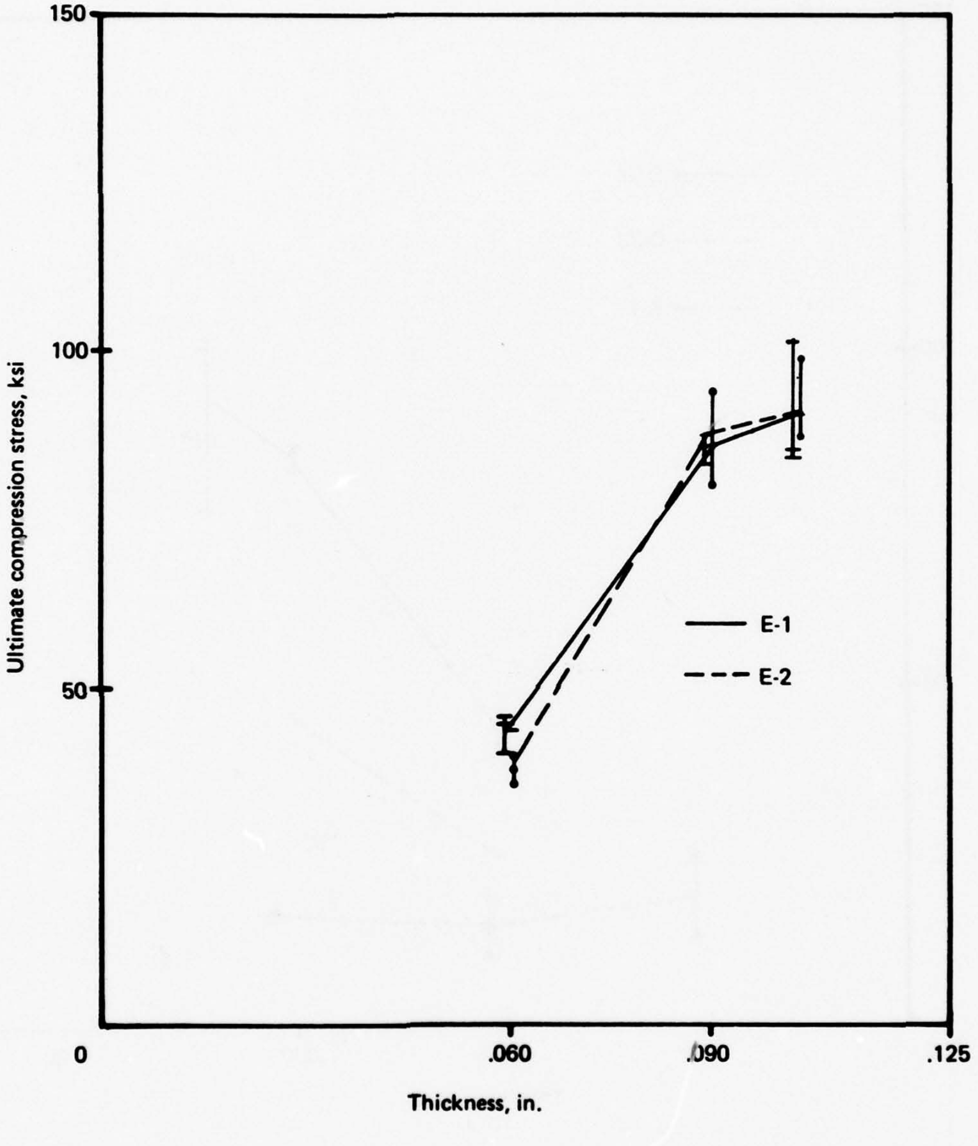

Figure 7. – Graphite Composite Strength With and Without TFE Additive

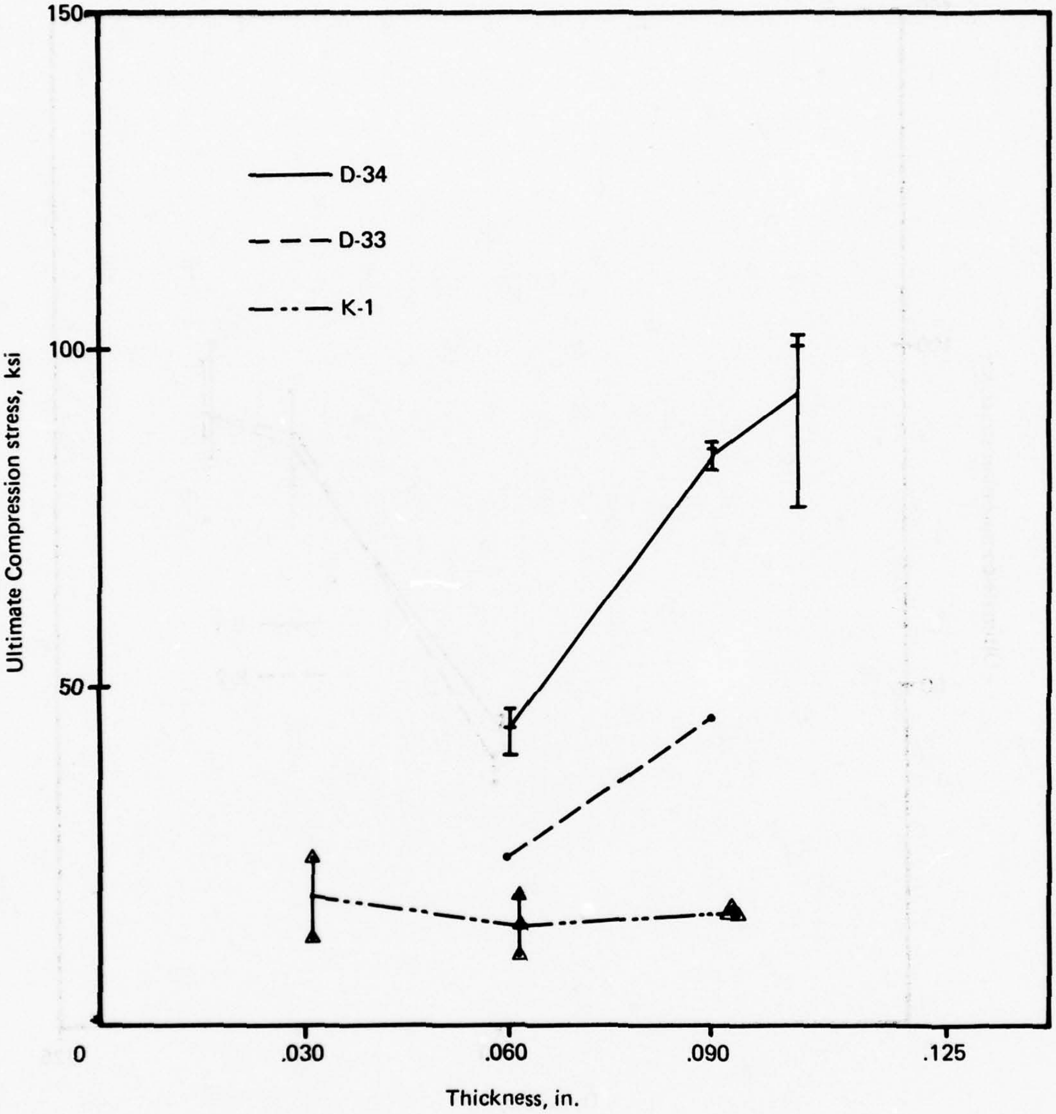

Figure 8. – Kevlar and Kevlar – Graphite Composites Strength

TABLE 2. – WEAR AND FRICTION DATA

A. Layup of parallel lay of unidirectional filament tape (Angle of filaments to shaft rotation indicated)

			Weight Loss, GMS	Wear Volume, CC., From Wear Scar	Wear Volume, CC., From Weight Loss	Coeff. of Friction, μ_f
1.	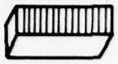	90°	0.0057	0.00382	0.00368	0.125
2.	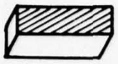	60°	0.0031	0.00275	0.00202	0.120
3.	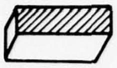	45°	0.0037	0.00249	0.00237	0.160
4.	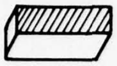	30°	0.0023	0.00145	0.00148	0.130
5.	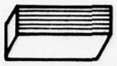	0°	0.0030	0.00175	0.00194	0.155
6.		90° *	0.0054	0.00357	0.00350	0.165

* Filaments Normal to Shaft Axis

B. Layup of alternate lay of unidirectional filament tape

			Weight Loss, GMS	Wear Volume, CC., From Wear Scar	Wear Volume, CC., From Weight Loss	Coeff. of Friction, μ_f
11.	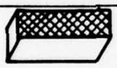	45°–45°	0.0020	0.00099	0.00129	0.170
12.	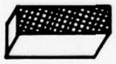	15°–75°	0.0030	0.00123	0.00195	0.140
13.	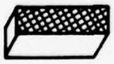	30°–60°	0.0027	0.00179	0.00176	0.150
14.	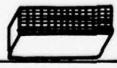	0°–90°	0.0056	0.00353	0.00404	0.155

TABLE 2. – (CONCLUDED)

C. Coated specimens

	Weight Loss, GMS	Wear Volume, CC., From Wear Scar	Wear Volume, CC., From Weight Loss	Coeff. of Friction, μ_f
21. Graphite epoxy with vendor "K" liner	0.0060	0.00323	–	0.100
22. Graphite epoxy with vendor "K" liner	0.0025	0.00130	–	0.050
23. Aluminum with vendor's liner	0.0028	–	–	0.075
24. Molded liner Vendor "K"	0.0031	–	–	0.065

D. Kevlar

31. With epoxy resin	0.0066	0.00170	0.00539	0.100
32. Cloth/epoxy boron nitride	0.0045	0.00193	0.00563	0.110
33. Cloth/epoxy plus TFE	0.0092	0.00384	0.01102	0.038
34. Tape plus graphite/ Kevlar prepreg. cloth	0.0130	0.00198	0.01642	0.053
35. Graphite/Kevlar prepreg. cloth	0.0231	0.01160	0.02935	0.068

E. Graphite fabric

1. With epoxy resin	0.0108	0.00759	0.01586	.069
2. With epoxy resin + TFE powder	0.0050	0.00490	0.00635	.056

(2) Kevlar/Epoxy Composites

Several approaches were taken to the specimen fabrication for these tests. For test D-31, Fiberite Kevlar fabric style W-107 was laid up with Hexcel F-161 350°F cure epoxy resin. For test D-32, fabrication was similar, but one part of boron nitride was added to four parts of the epoxy resin. One part TFE powder to four parts resin was added to a like fabrication for test D-33. Specimens for test D-34 were fabricated using alternate plies of Kevlar tape and Fiberite W-107 Kevlar/graphite cloth with Hexcel F-161 resin. Test D-35 utilized specimens laid up with prepregged Fiberite W-107 Kevlar/graphite cloth. Wear and friction data are tabulated in table 2.

(3) Additional Composites

This series of tests was devised to evaluate the use of various MIL-B-81934 qualified liners as bore coatings for composite bearings. Graphite/epoxy specimens were fabricated to the configuration shown in figure 3 for the decreasing stress level test. The liner material was sprayed and baked onto a set of specimens by a bearing manufacturer. This set of specimens was designated C-21. Another bearing manufacturer bonded their fabric liner to a set of specimens which was designated as C-22. As a control, this manufacturer also provided a set of aluminum specimens with the same fabric liner under designation C-23. In addition, the first manufacturer provided molded bushings of the same material used in lining MIL-B-81820[8] spherical bearings. Specimens were machined from the molded bushings and identified as C-24. All wear and friction data obtained in testing the above specimens are included in the tabulation of table 2.

c. Corrosion

At this point in the program, it was expedient to address the very significant problem of corrosion resistance of a journal bearing in a structural airframe joint utilizing advanced composite structural members. The experience and test programs of a number of airframe manufacturers and the Air Force,[9] point up the highly noble nature of graphite. The wide difference in electrolytic potential between graphite and the common airframe structural metals results in extensive, damaging corrosion to the metal in the presence of any electrolyte.

The test devised to demonstrate this effect was simply to prepare 3-inch-square by 1/2-inch-thick graphite composite plates and to install various metallic material bushings in an interference fit hole in the composite test plates. The standard bushings used included parts made of cadmium-plated aluminum bronze, chromium-plated 4130 steel, cadmium-plated 17-4PH CRES, bare aluminum bronze, cadmium-plated 4130 steel, anodized 6061-T6 aluminum, and Ti-6Al-4V titanium alloy.

The specimens, consisting of the graphite composite plates with the bushings installed, were

---

[8] "Bearings, Plain, Self-Aligning, Self-Lubricating, Low Speed Oscillation," MIL-B-81820.

[9] "Corrosion Behavior of Metal Fasteners in Graphite-Epoxy Composites," Air Force Materials Laboratory, February 1975.

vertically suspended in a salt spray cabinet. Conditions established and maintained in the cabinet included 5% salt spray solution at 95°F in accordance with Federal Test Method Standard No. 141a, Method 6061. The specimens were removed for inspection after 48 hours.

Since results of this test must be evaluated primarily in a subjective way, photographs were taken. The specimen condition is shown in figure 9.

4. DESIGN AND FABRICATE BUSHING SPECIMEN

It was decided that specimen design and fabrication should permit economical testing on parts representative of a typical airframe journal bearing. Based on this requirement, the following factors were considered essential:

1) The specimen should be economical to fabricate.

2) Size and geometry should be consistent with existing test equipment and resultant data such as to afford easy comparison with available test data.

3) Specimen size and geometry should be consistent with airframe bearing manufacturers' capabilities.

4) The specimen should be of standardized geometry and dimensions.

With due consideration to the above factors, a specimen conforming to the M81934-16-16 size and configuration was selected. This is a standard one-inch bore cylindrical bushing, 1/2-inch long, and is illustrated in figure 10.

It was decided that specimens should be obtained from bearing manufacturers in an effort to make test data representative of production, rather than laboratory, parts and to involve the manufacturers as early as possible in this program. To this end, visits were made to a number of manufacturers' facilities to evaluate their capabilities and interest in this program. Orders were placed with selected manufacturers after evaluation and consideration by the program's Principal Investigator and the Air Force Project Engineer. It was further decided that the Phase I Design Verification work could better be conducted with Phase II type specimens obtained from the bearing manufacturers.

5. DISCUSSION OF TEST RESULTS

a) Corrosion

The corrosion testing was directed mainly to the secondary program objective of using composite journal bearings in conventional metallic structure. The test results showed severe electrolytic corrosion problems will occur when graphite composites are used in conjunction with the common aircraft structural materials such as 4000 series steels, aluminum alloys and bronze. Such protective treatments as chrome plating of steel and anodizing aluminum delayed the corrosion process but did not eliminate it. Sacrificial cadmium plating corroded very rapidly, leaving the substrate unprotected. The two metallic materials which sufficiently resisted attacks to be considered for use with graphite composites were 17-4PH

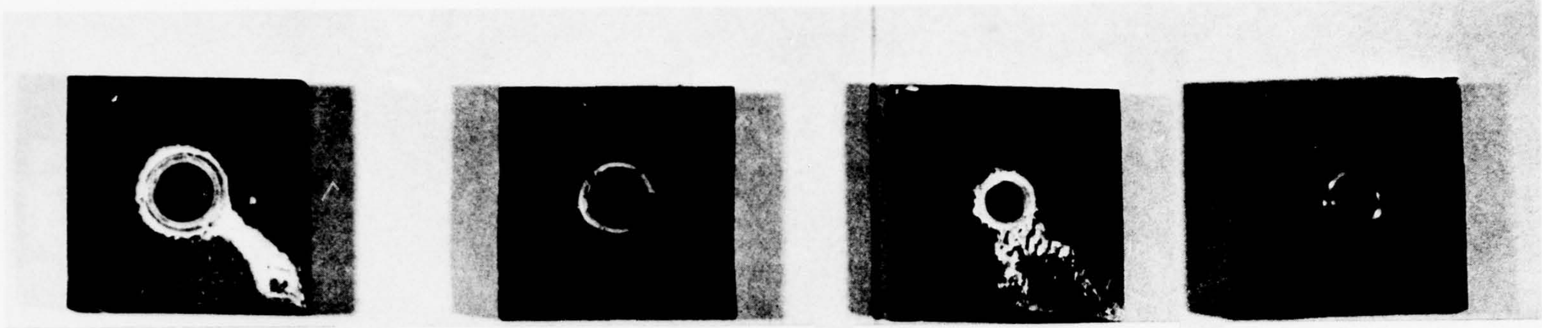

Cadmium-plated
aluminum bronz

Chrome-plated
4-130 steel

Cadmium-plated
aluminum bronze

6 Al-4V titanium
(bare)

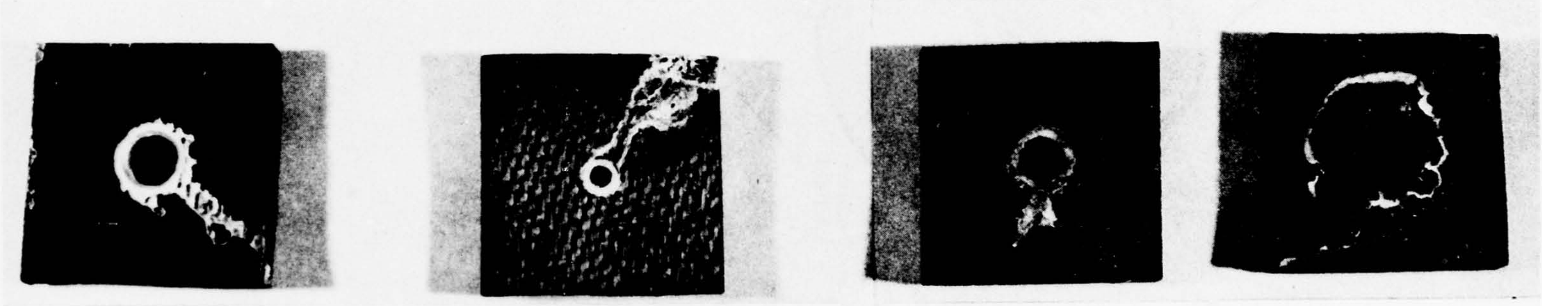

Cadmium-plated
17-4PH cres

Anodized
6061-T6 aluminum

Aluminum bronze
(bare)

Cadmium-plated
4130 steel

Figure 9. – Corrosion Specimens After 5% Salt Spray Exposure

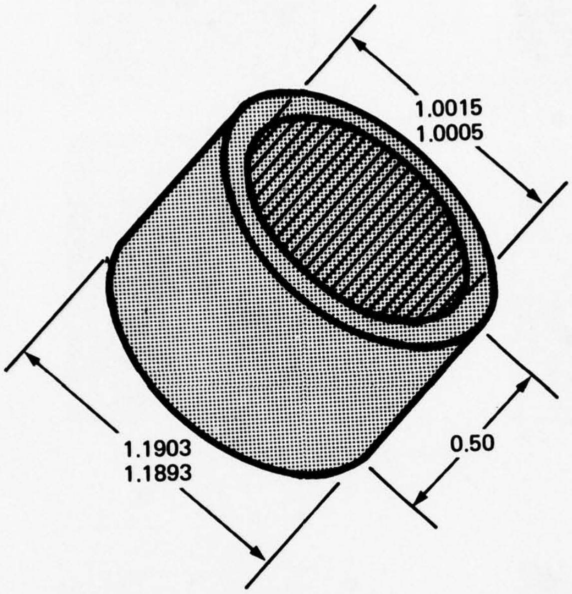

Figure 10. – Load/Life Test Bushing

corrosion resistant steel and titanium. Some attack on the 17-4PH was evident while there was none obvious on the titanium.

Neither 17-4PH nor titanium offer a promising solution to the primary objectives of this program. They do not have the friction and wear properties required and they both would introduce a significant weight penalty over any of the composite materials under consideration.

b. Strength

The graphite composite using graphite fiber tape had the highest ultimate strength of the materials tested. However, it showed a very brittle nature, as all failures occurred without measurable yield. All fractures evidenced internal shear across the specimen and progressed from the free ends of the specimen toward the center of the specimen. In a bushing loaded with a free-fitting pin, we would expect edge loading with resulting high stress and damage. It would appear that bell-mouthing the bushing or providing end restraint would be required to utilize the potential strength of graphite composites. The application of a bonded-on TFE fabric layer to the loaded face of the specimen resulted in even higher test results. This is apparently due to a cushioning effect that minimized the edge loading.

Somewhat lower test results were obtained from the graphite composites made of woven graphite fiber cloth. The addition of TFE powder to the resin did not change the compressive strength. It was concluded that filament wound bearings will produce results similar to the graphite tape layups, due to similar fiber orientation.

Kevlar was considered as a potential fiber in a composite, due to its light weight, high-fiber strength, and inert nature. Used as a fabric in a resin layup, it performs similarly to the graphite fabric composites. In a 50-50 mix with graphite in a fabric, results are almost identical to the straight graphite fabrics. It was decided that the use of filament winding techniques would be required to determine whether this material could produce a composite that would have sufficient strength.

Observations of special interest based on the strength testing follows.

1) The addition of friction/wear-enhancing TFE powder had no deleterious effect on compressive strength of the graphite or Kevlar composites.

2) Fibers such as graphite and Kevlar can be combined in a composite in such a manner as to take advantage of their unique characteristics. As an example, the wear interface can be of Kevlar in a TFE-enriched resin, the next layer can be of graphite for optimum strength, and the outer layer can be of Kevlar for compatibility with an aluminum or steel structure.

3) The significance of the ultimate compressive strengths obtained is the requirement of the designer to properly size a bearing to take the applied load.

c. Wear

The wear data are presented in table 2. For each identified test and specimen geometry, six individual specimens were tested simultaneously to improve accuracy. The literature covering investigations of graphite composite wear behavior is contradictory. Both perpendicular and parallel fiber orientations are stated to give minimum wear and friction. Our tests show lower friction and wear with the fibers angled to the sliding direction of the interface. The lowest wear was with the fibers 30° to the shaft centerline and the lowest friction was at 60° to the shaft centerline. Based on the test data, it was decided that angles between 30° and 60°, as normally achieved by filament winding, would be satisfactory.

Within the Phase I wear studies, difficulties were encountered in obtaining accurate wear readings with the TFE-lined specimens due to distortion of the wear scar because of the relatively low modulus of the TFE fabric. However, the relative range of wear values between TFE fabric, Kevlar composite, and graphite composite did not permit an obvious choice on the basis of these tests. It was decided that realistic wear rate values could only be established with bushing-to-shaft specimens representing actual aircraft hardware.

d. Friction

The friction coefficient obtained with the graphite composite specimens ranged between 0.120 and 0.170. Kevlar composite had a value of 0.100 and the combination graphite/Kevlar composite had values of 0.053 and 0.068. All composites tested benefited by the addition of TFE powder to the resin. The program goal was to obtain sleeve bearings with a coefficient of friction close to the 0.050 of the MIL-B-81820 TFE liners, depending on load. It is obvious that this cannot be done with the graphite composites alone. It can be done by using low-friction liners in graphite composite bushings or by using a two-stage composite with the wear portion made of low-friction fibers, reinforced with load-carrying outer graphite fibers.

6. CONCLUSIONS AND RECOMMENDATIONS FOR PHASE II

a. Conclusions

The testing accomplished under Phase I of this program conclusively showed that graphite composites are unsuitable for the majority of airframe bearing applications. Primary reasons for this are as follows:

1) High Friction – Friction values are several times too high to permit substitution for currently used TFE fabric and lubricated metal-to-metal bearings.

2) Battery Effect – Corrosion problems in metal structure or with steel shafts can only be avoided by introducing suitable barrier materials at critical interfaces.

3) Brittle Nature – Lack of ductility and probable edge loading or potential overload will result in fracture with no "forgiveness" as found in more ductile materials.

4) Abrasion – This can result in shaft wear and fatigue-initiating damage to pins and shafts. Graphite fibers are harder than the mating metal hardware. They do not have the lubricating qualities of the carbons and graphites we are more accustomed to.

Graphite fibers have a potential for strengthening composites of other materials, such as Kevlar. As opposed to graphite composites, composites of Kevlar show a yield before fracture. A combination of the two fibers in a composite can be optimized to produce the physical characteristics required in an airframe bearing. In addition, Kevlar alone could be used as the reinforcing fiber in composite bearings suitable for use in airframe applications. In such a bearing MIL-B-81820 liners can be used to provide desirable friction and wear properties, eliminate corrosion problems in both graphite composite structure and metal structure, and result in sufficient ductility for safe design.

b. Recommendations For Phase II

Based on evaluation of the test data from Phase I, it was decided that Phase II would be conducted in accordance with the outline presented in figure 11. The two concepts that were judged most worthy of continuing investigative and development effort were as follows:

1) A Kevlar/epoxy composite bearing. Such a bearing can be lined with TFE fabric, sprayed or molded liners, or processed to incorporate a suitable friction/wear bore.

2) A hybrid composite combining two or more fibers, such as graphite and Kevlar, oriented within the composites to optimally utilize the unique characteristics of the several fibers. The wear surface in the bore can be processed as above.

It was additionally recommended that initial steps be taken to fabricate sufficient bushing specimens to verify the conclusions drawn from the Phase I screening tests. These verification specimens should be of the configuration shown in figure 10. This is an economical size and geometry to fabricate and lends itself to available test machines and fixturing.

SECTION VI
PHASE II

1. TEST PLAN

The test plan for this phase was developed during the course of Phase I and the major testing parameters are shown in figure 11. The plan included the evaluation of the appropriate fabrication techniques and a screening test schedule that permitted identification of the most promising approaches. The objective of this test phase was the demonstration of the validity of the concepts, concept variations, and processes derived from Phase I. In addition, the Phase II test program served as a screening process whereby the most promising approach, involving the least technical risk, could be selected and compared with

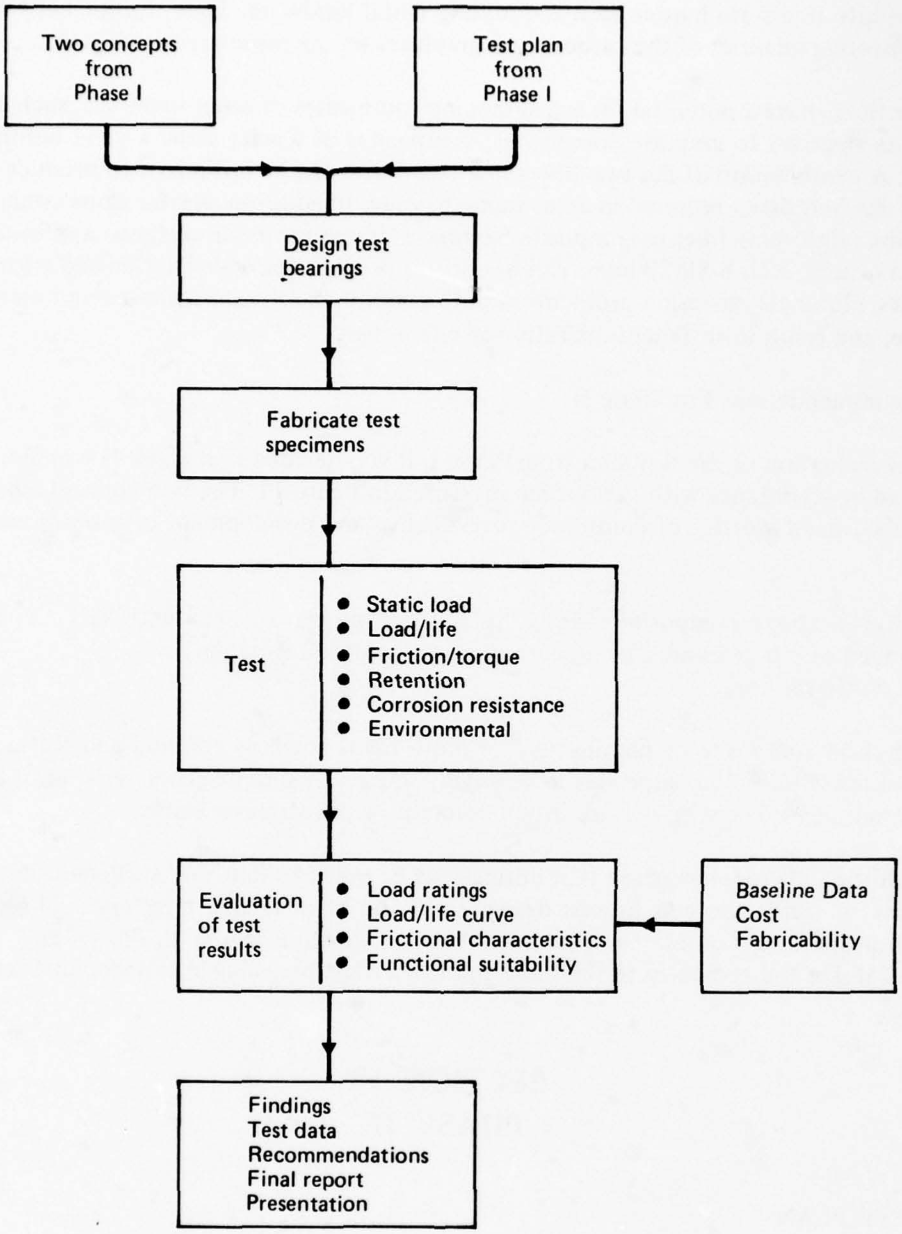

Figure 11. – Outline of Phase II

standardized requirements and performance of existing journal bearings. Certain of the considerations of Phase I were covered in greater depth due to the availability of appropriate specimens in the form of journal bearings. Specific considerations included:

1) Weight savings

2) Installation, retention, and replacement

3) Environmental resistance

2) COMPOSITE JOURNAL BEARING CONCEPTS

From the Phase I literature survey, discussions with bearing manufacturers, and the contractor's experience, several concept variations were selected for initial screening tests. Specific concept variations considered are outlined as follows:

1) Reinforced moldings
    - Vary molding resin
    - Vary reinforcing material
2) Filament wound reinforced plastics
    - Glass filament
    - Graphite filament
    - Kevlar filament
3) Bore liners to control friction and wear
    - Bonded-in fabric
    - Fabricated in place with filament wound outer shell
    - Sprayed, cured, and machined

3. DESIGN OF TEST SPECIMENS

Considerations in the design and selection of the test specimens included cost, multiple source availability, adaptability to a large variety of screening tests, test machines available and their capacity and fixturing, and bearing manufacturers' capability and experience. It was desirable that the test specimens represent real airframe hardware to the optimum extent. With the above in mind, the selection of a straight, cylindrical journal bearing geometry for the specimen was obvious. A 1-inch bore size was selected as being representative of a large number of airframe structural joints, thus eliminating gross sizing effect misinterpretations of test data. A 1/2-inch bearing length was selected to provide a bore-to-length ratio well within generally acceptable values. Tolerances and additional dimensions were taken from the current military standard for TFE-lined journal bearings, MIL-B-81934/1. Figure 10 illustrates the specimen geometry.

4. TEST SPECIMEN FABRICATION

Since it was the intent of the program to obtain data meaningful in that it represents real production hardware and not laboratory or prototype parts, a number of bearing manufacturers were contacted to determine their capabilities and interest in contributing to this program. Response was generally gratifying, and it was possible to obtain specimens from a broad representative portion of the airframe bearing industry.

Following is a description of the typical manufacturing processes used in fabricating filament wound specimens of journal bearings evaluated in this program:

1) A woven fabric tubular liner is placed over an appropriately sized and finished cylindrical mandrel that is treated with a parting agent.

2) Temperature is applied to the liner to shrink it snugly to the mandrel. The liner fabric is either a style 1032 stain weave of Teflon and Dacron yarns that has predominantly Teflon exposed on the live bearing surface, or a style 1497 taffeta weave of the same yarns with balanced exposure of Teflon on both sides.

3) The in-place liner is thoroughly coated with Dow DER 332 three-part epoxy resin.

4) The mandrel, with the liner in place, is now helically wound with continuous filament yarns of E-glass or Kevlar 49 fibers. The yarns are led through a container of the resin to maintain saturation of the layup. The helical angle is predetermined and maintained as is the yarn tension.

5) The above process is continued until the appropriate dimensional buildup is obtained and the mandrel and filament wound tube are removed from the winding machine.

6) Drying, curing, and post-curing can be accomplished on the mandrel, but commonly, wound tubes are first removed from the mandrel.

7) After curing, the tube O.D. is machined to the proper dimension and the tube is parted into a number of appropriate length bearings.

Process variables such as helix angle, filament tension, resin content, cure cycles, and fiber pretreatment can be used to control final properties of the filament wound composite.

5. TEST PROCEDURES

Initial testing in this phase was of a screening nature to comparatively evaluate the candidate concepts. Only those concepts were selected for further testing that were near the top in Phase I evaluations and showed well in the screening tests for load capability and wear life.

Obviously, specimens that failed badly in ultimate strength tests were eliminated from further test evaluation.

From the screening tests, the three most promising candidate concepts were further tested to the qualification requirements of MIL-B-81934. In addition to this testing, specimens from these concepts were used for weight comparison determinations and retention tests.

An outline of the specific test procedures and testing equipment used follows.

a. Radial Static Load

(1) Test Procedure

The static load test procedure used in this program is that described in paragraph 4.6.1 of MIL-B-81934. Where specimen load capability permitted, the applied load was 31,400 pounds, as specified for the M81934/1-16C016 bearing. This load is the specified qualification load for TFE-lined 17-4PH journal bearings. Note that for the same geometry and size TFE-lined aluminum journal bearing, the specified qualification load is 20,000 pounds. In those instances where specimen load capability did not permit application of the full test load, the load level at failure was noted as the Ultimate Radial Load capability.

(2) .Test Machine and Fixturing

The test machines used for static testing were any of several available universal test machines, equipped with autographic readout and recording capability. Fixturing was simple, as illustrated in figure 1 of MIL-B-81934, and consisted of a blade and clevis joint with the specimen housed in the blade and the joint pinned for loading. Rather than using a dial indicator to measure elastic strain and permanent set, head travel versus load was recorded throughout the test. Permanent set at the specified preload was read directly from the autographic load/strain plot. The test setup is illustrated in figure 12. Figure 13 is a typical load/strain plot as produced for each static load test specimen.

b. OSCILLATION UNDER RADIAL LOAD

(1) Test Procedure

This testing was conducted as generally described in paragraph 4.6.2 of MIL-B-81934. The test load used was 16,500 pounds, which is the specified qualification load in MIL-B-81934 for both 17-4PH and aluminum journal bearing with TFE bore liners. Testing was continued through 25,000 oscillation cycles, except in those instances in which indicated wear greatly exceeded the allowable 0.0045 inch earlier in the test. In addition to continuous readout of wear during the test, instrumentation provided a continuous printout of torque in inch-pound units. Conversion of torque to coefficient of friction was accomplished using the relationship, $\mu_f = T/Pr$, where μ_f = coefficient of friction, T = torque in inch-pounds, P = test load in pounds, and r = the radius of the test bushing.

Figure 12. – Static Load Test Fixture

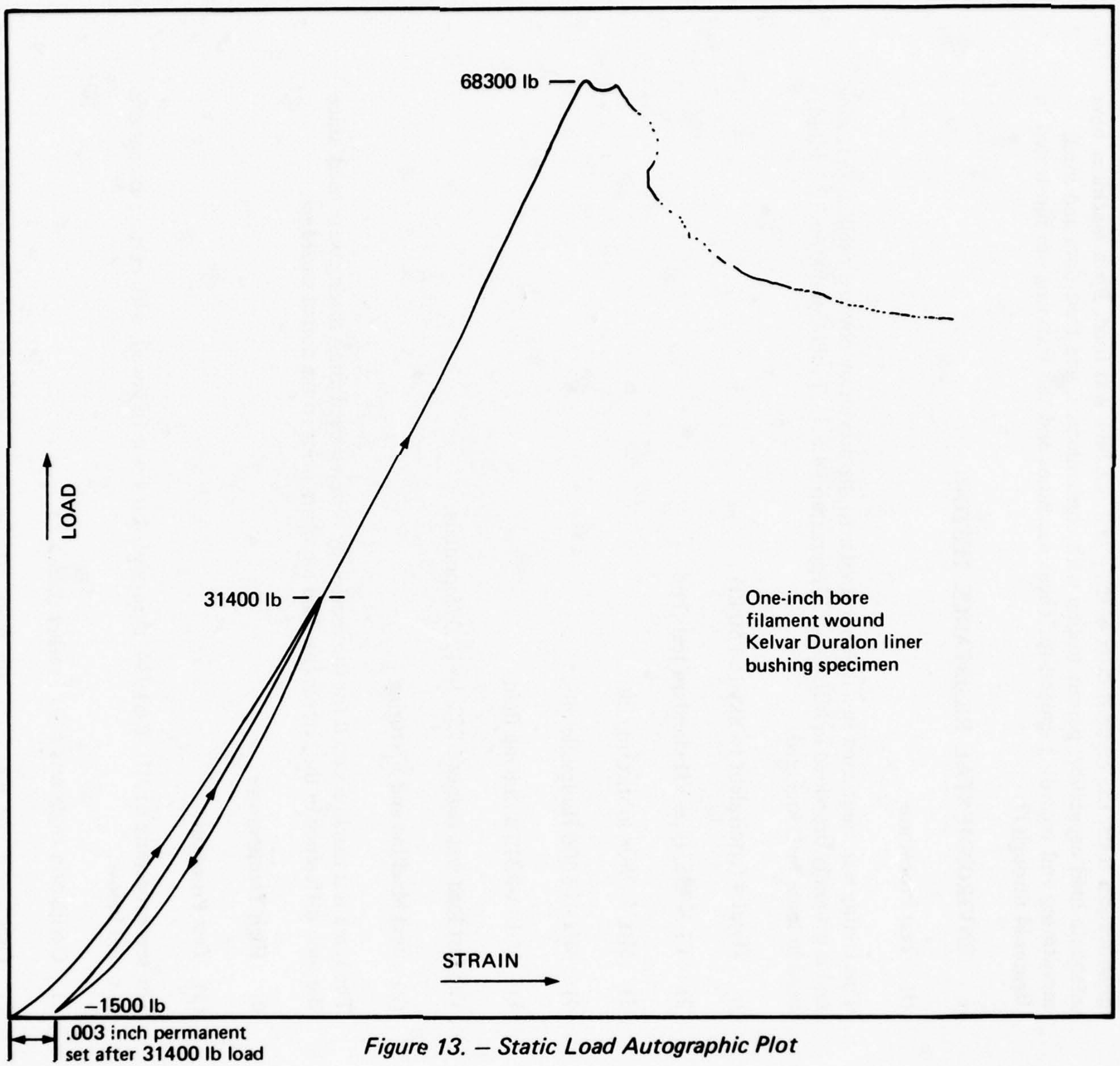

Figure 13. – Static Load Autographic Plot

(2) Test Machine and Fixturing

Two bearing test machines were used in this program. A 60,000-pound single-station machine was used for much of the screening test work where single specimens or a relatively few specimens were tested. For multiple specimen testing, as in the MIL-B-81934 qualification tests, the seven-station bearing test machine was used. Both machines have adequate load capability, permit testing with contaminants, and have data and input monitoring and recording capability. These machines and the fixturing are illustrated in figures 14 through 17.

c. ENVIRONMENTAL RESISTANCE TESTING

(1) Test Procedure

This testing was conducted in a manner similar to the previously covered oscillation testing and is generally described in MIL-B-81934, paragraph 4.6.3, "Fluid Compatibility." Fluids used in these tests included:

1) Hyjet 4 (equivalent to Skydrol 500B)

2) TT-S-735, type VII standard test fluid

3) MIL-L-7808 lubricating oil

4) MIL-H-5606 Hydraulic oil

5) MIL-A-8243 anti-icing fluid

The test load was reduced 75% to 12,375 pounds.

(2) Test Machine and Fixturing

The same test machines used for the previously covered oscillation testing were used, since the only difference in the tests is the fluid exposure prior to the actual wear test.

d. High Temperature

(1) Test Procedure

The test procedure of MIL-B-81934, paragraph 4.6.4 was followed, with certain exceptions as noted below:

1) Oscillation angle was ± 30°, rather than ± 25°.

2) Oscillation rate was increased from 10 cpm to a maximum of 20 cpm if the pin-to-liner interface temperature could be maintained at the proper test value.

3) Initial load was 16,500 pounds and then reduced to 12,375 pounds, if necessary.

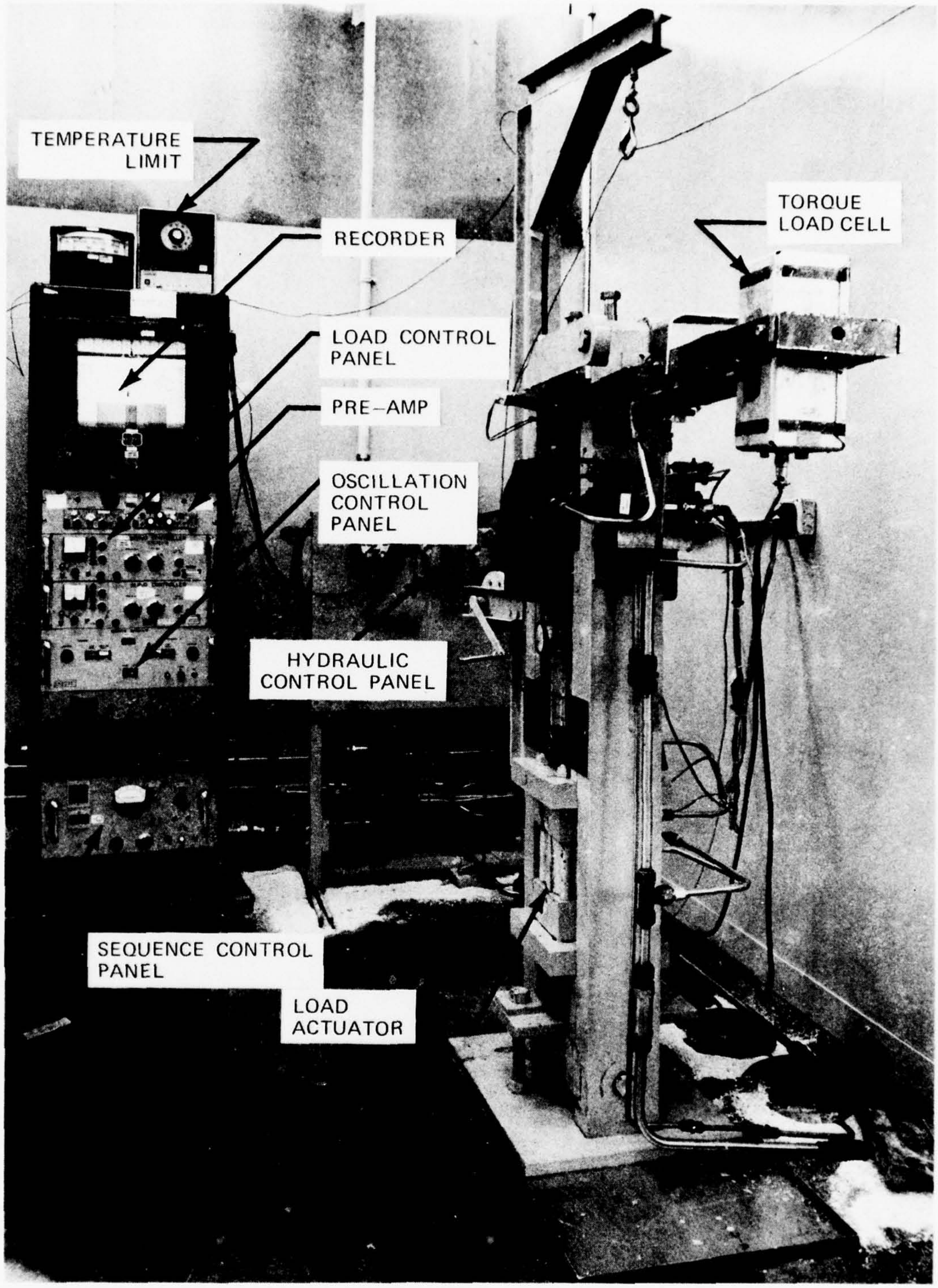

Figure 14. – Oscillating Reverse Load Bearing Test Machine

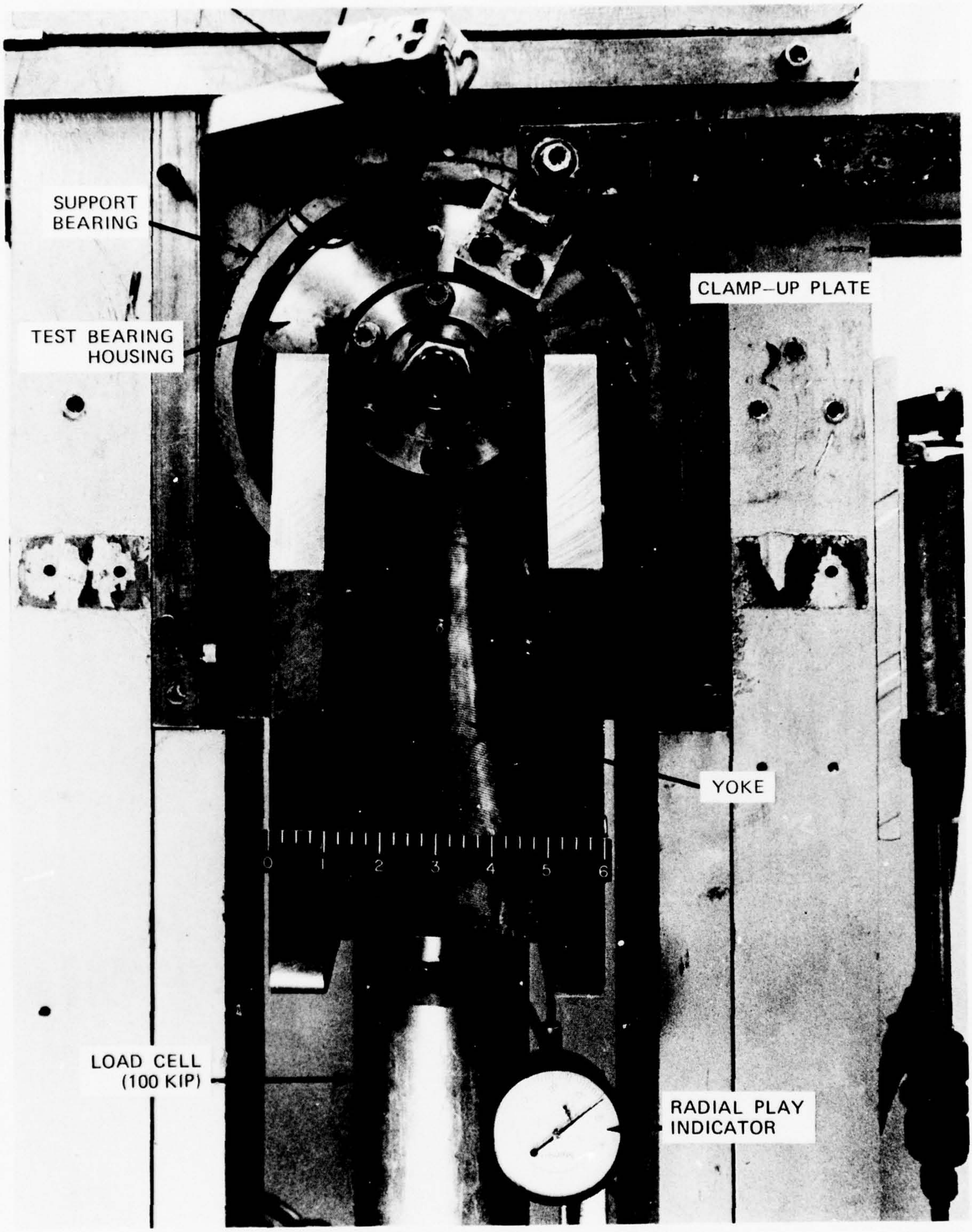

Figure 15. – Oscillating Reverse Load Bearing Test Machine Setup

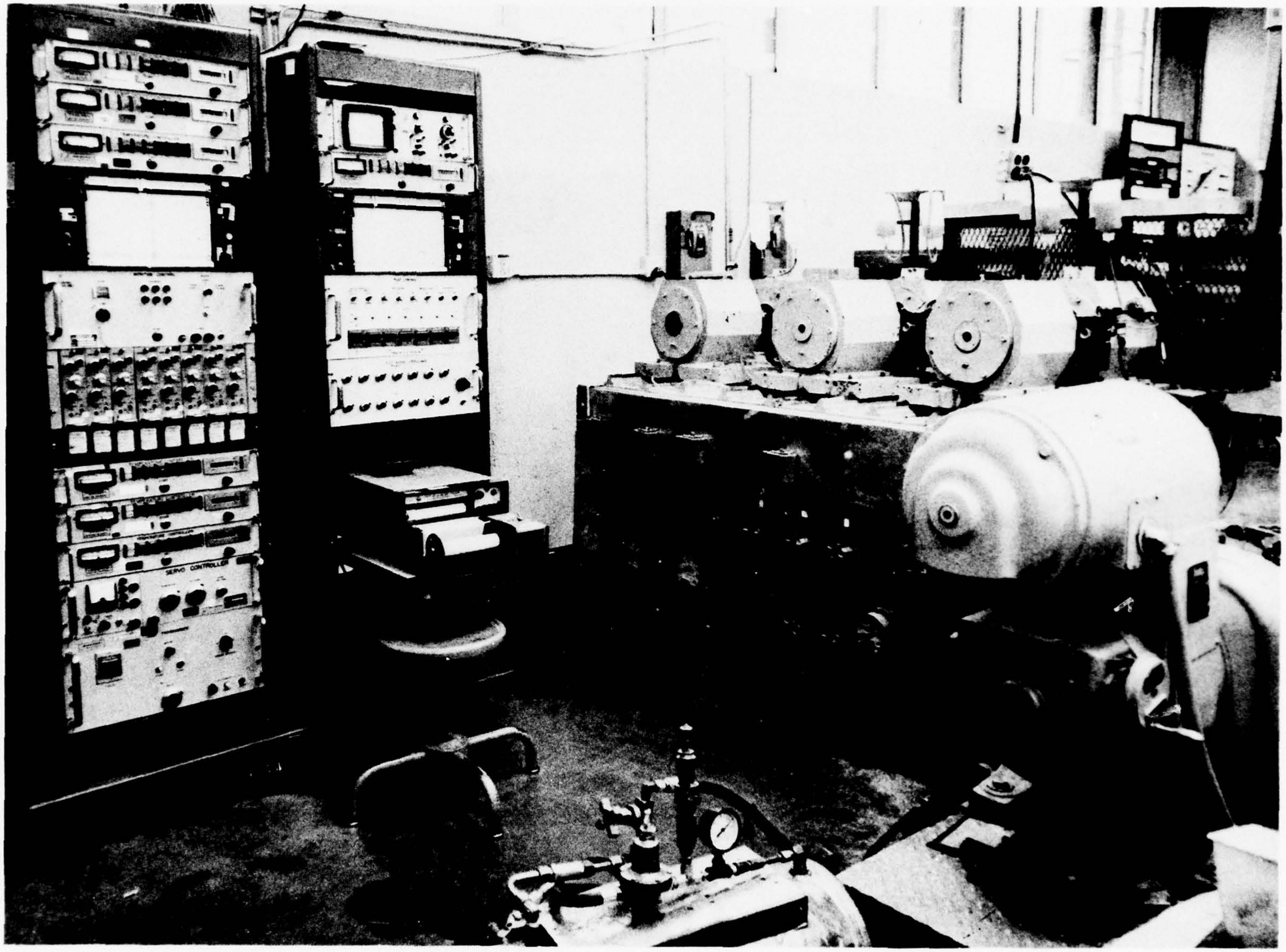

Figure 16. – Seven Station Bearing Test Machine

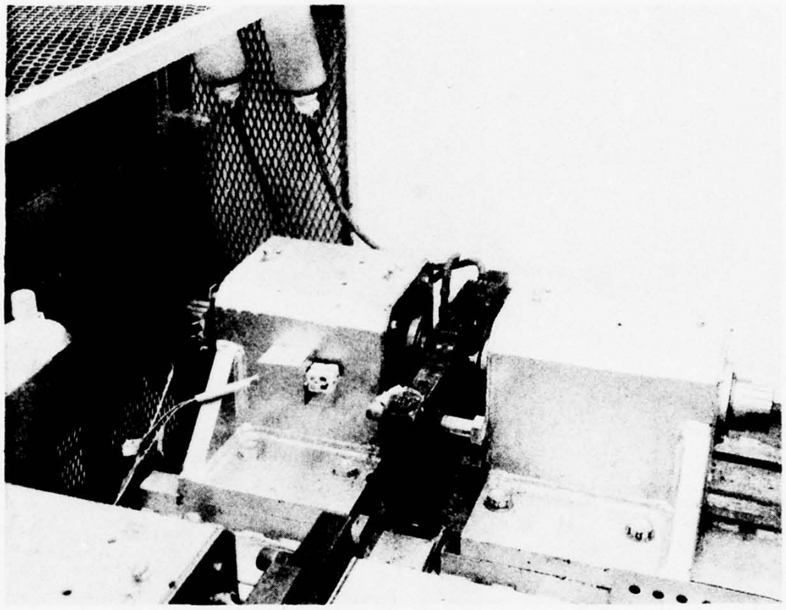

Figure 17. – Seven Station Bearing Test Setup

4) Test temperature was initially 325° F and then reduced to 250° F when indicated by specimen capability.

(2) Test Machine and Fixturing

The test machine used for this testing was the Rockwell 30,000-pound capacity plain bearing tester. The test specimen is held with 0.0005-inch nominal interference fit in a housing that positions the specimen and transmits load during cycling. The design is such as to prevent axial and rotational motion of the specimen in the housing. The test shaft is fixed in a holder that transmits the oscillatory motion. Heat for elevated temperature testing is provided by resistance heaters attached to the shaft holder. Heat travels from the holder through the shaft to the test bearing. The basic components and general arrangement of this machine are illustrated in figures 18 and 19.

e. Bearing Retention

(1) Test Procedure

Two retention systems were evaluated in this program. One was the standard-practice interference fit. The procedure was simply to machine an aluminum test housing with a bore that resulted in a nominal 0.001-inch interference with the O.D. of the test specimen. After installation of the specimen, the force required to remove it from the housing was measured and both specimen and housing were inspected for any damage due to the installation. In addition to the pushout tests, all static oscillating tests on journal bearings in this program utilized an interference fit between test specimen and test housing for retention. This procedure was essentially the same as current practice for journal bearing retention in airframe manufacture.

The second retention method involves the use of machined matching grooves in the housing I. D. and on the bearing 0. D. Prior to bearing installation, these grooves are slightly overfilled with a resin of nonflowing consistency. The grooves are of semicircular section and the two half rings of resin knit along a diameter of the cross-section to form essentially a cast-in-place retaining ring. Pushout of the bearing is resisted by the shear strength of the ring. Pushout values can be adjusted for bearing replacement by the resin selection and by the number and size of the retaining rings as they affect the shear area.

(2) Test Machine and Fixturing

A universal test machine was used to measure pushout forces for both retention systems. Test specimens were installed using an arbor press. In each instance, fixturing consisted simply of a stepped arbor for alignment and to apply the load to the specimen face, and test blocks to provide clearance.

f. Weight

During the course of the test program representative composite journal bearing specimens were weighed and the weights recorded for comparison with the published weights of M81934/1-16-016 CRES and aluminum journal bearings and standard NAS bronze and steel

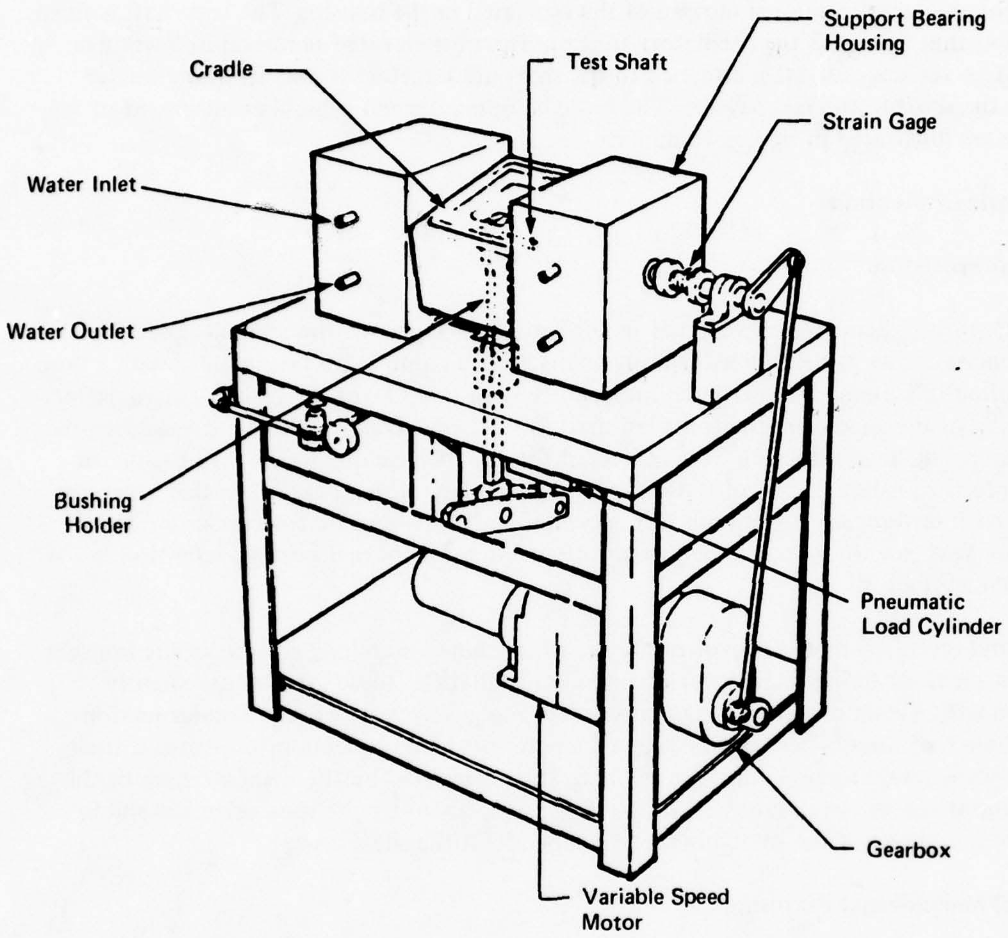

Figure 18. – 30,000 Pound Plain Bearing Tester

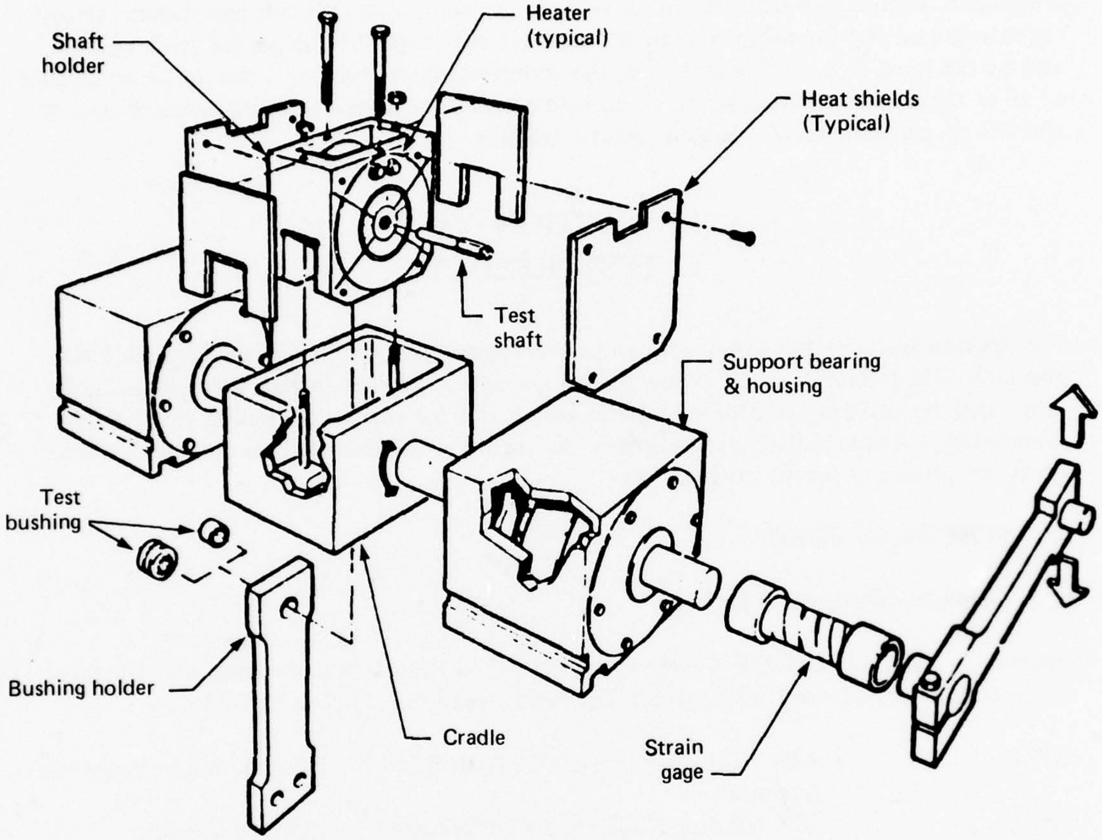

Figure 19. – 30,000 Pound Plain Bearing Tester (Exploded View)

bushings. All specimens had the same nominal I. D. and O. D. All specimen lengths were adjusted to make the comparison based on 1 inch of length, as is done on the present MS and NAS standards.

An attempt was made to make weight comparisons based on the specific gravities of the materials used in the composites. This required a rather tedious procedure of dissolving the cured resin from the composite and then determining the weight of the residual fiber. Knowing the specific gravity of the fiber material and the resin, and the proportions by weight in the composite, it was then possible to compute the specific gravity of the composite. This technique assumed no voids in the composite. If voids are present, errors are introduced and the magnitude of the errors is influenced by the percent void volume and by the range in specific gravities of the composite constituents. It should be noted that of all of the metallic materials and composite constituent nonmetallic materials, Kevlar 49 and the epoxy resin had the lowest specific gravities.

SECTION VII
TEST RESULTS

This section includes tabulated data and observations on both the initial screening tests and later MIL-B-81934 qualification tests. Concepts evaluated include journal bushings fabricated by molding reinforced plastic resins and by filament winding reinforcing filamentary yarns in plastic resin matrices. All testing was conducted on the standardized specimen geometry shown in figure 10.

1. SCREENING TESTS

a. Graphite Composites (Table 3)

Specimens GR-1 through GR-4 were obtained by AFFDL from a bearing manufacturer. They were molded from DuPont polyimide resins with the additives listed below:

GR-1: 40% NR-150-A2 resin, 20% MoS_2, 40% 1/2-inch WFA chopped graphite
GR-2: 50% NR-150-A2 resin, 50% 1/2-inch WFA chopped graphite
GR-3: 45% NR-150-A2 resin, 10% MoS_2, 45% 1/2-inch WFA chopped graphite
GR-4: 50% NR-150-B2 resin, 50% 1/2-inch WFA chopped graphite

Specimens GR-5 and GR-6 were filament wound using Thornel T-300 graphite fiber and Hercules H-3501 350° F epoxy resin. DuPont TFE powder was added to the resin in GR-6 in the proportion of one part TFE to four parts resin.

Specimen GR-7 was supplied by a bearing manufacturer. It was fabricated by filament winding graphite filament yarns over a MIL-B-81934 approved TFE fabric bearing liner.

TABLE 3. – SCREENING TEST DATA – GRAPHITE COMPOSITES

O.D. 1.189
I.D. 1.000
Length –0.50

Specimen No.	Composition	Static		Dynamic				Comments
		Ultimate load, lb.	Permanent set, in.	Radial load, lb.	Wear, in.		Final torque in./lb.	
					Indicated	Measured		
GR – 1	Graphite – chopped and molded	20,000	–					
GR – 2	Graphite – chopped and molded	21,200	–					
GR – 3	Graphite – chopped and molded + 20% MoS_2	15,200	–					
GR – 4	Graphite – chopped and molded + 10% MoS_2	17,600	–	12,500	–	–	–	Compressive type failure after approx. 10 cycles
GR – 5	[a]Graphite – filament wound / H3501 resin	34,400	–	12,500	–	–	–	Compressive type failure after 530 cycles
GR – 6	[a]Graphite – filament wound / H3501 resin + TFE	21,800	–	12,500	–	–	–	Delamination after 600 cycles
GR – 7	Graphite – filament wound with TFE fabric liner	19,000	–	12,500	–	–	–	Compressive type failure after 530 cycles

[a] Bore lined with graphite fabric and reinforced with longitudinal plys of longitudinal tape and plys of graphite fabric.

b. Glass Composites (Table 4)

All specimens in this group were fabricated by a filament winding technique using E-glass fiber yarns and 350° F epoxy resins.

Specimens GL-8 through GL-17 were fabricated by one bearing manufacturer and represent their commercial product. GL-8 through GL-10 utilized a commercial TFE-fabric bore liner. Specimens GL-11 through GL-17 were modified by removing the bore liners and replacing with a sprayed and cured proprietary liner that is approved to MIL-B-81934.

Specimens GL-18 through GL-24 were obtained from another bearing manufacturer, and were fabricated by a proprietary process. The TFE fiber-enriched liner is essentially woven in place as the bushing is fabricated, adding increased homogeneity to the finished product.

c. Kevlar Composites (Table 5)

All of the journal bearing specimens in this group were fabricated by the filament winding technique using an epoxy resin matrix. A number of different bore liners and manufacturing techniques were evaluated.

Specimens K-25 through K-31 were fabricated in-house using filament winding techniques and DuPont Kevlar 49 DP-01 yarn. Variations are noted below:

K-25:	Hercules H3501 resin
K-26:	Hercules H3501 resin plus TFE powder at 4:1
K-27:	Refcoa resin plus TFE powder at 4:1
K-28:	Hercules H3501 resin plus TFE powder at 4:1 in first five plies
K-29:	Hercules H3501 resin plus bearing manufacturer applied proprietary molded TFE liner
K-30 and K-31:	Hercules H-3501 resin plus an experimental molded liner applied by another bearing manufacturer

Specimens K-32 through K-52 were fabricated by a bearing manufacturer on production filament winding equipment with techniques modified to Kevlar, rather than E-glass, fibers. The fabrication process was essentially that previously outlined in section VI 4. The specimen descriptions follow:

K-32 and K-33:	Dow DER 332 resin – liner removed and replaced with experimental molded liner as was done for K-30 and K-31
K-34 through K-36:	Dow DER 332 resin and style 1032 satin weave Teflon and Dacron liner
K-37 and K-38:	Dow DER 332 resin and Stearns and Stearns Teflon/glass fabric liner
K-39 through K-43:	Kow DER 332 resin – liner removed and replaced with sprayed MIL-B-81934 approved liner
K-44 through K-46:	Dow DER 332 resin and style 1497 taffeta weave Teflon and Dacron liner that is qualified to MIL-B-81934
K-47 through K-52:	Dow DER 332 resin and style 1032 satin weave Teflon and Dacron liner

TABLE 4. – SCREENING TEST DATA – GLASS COMPOSITES

O.D. 1.189
I.D. 1.000
Length –0.50

Specimen No.	Composition	Static		Dynamic				Comments
		Ultimate load, lb.	Permanent set, in.	Radial load, lb.	Wear, in.		Final torque in./lb.	
					Indicated	Measured		
GL – 8	Glass – filament wound with TFE fabric liner	51,500	–	12,500	0.0054 at 50,000 cycles	–	146	
GL – 9	Glass – filament wound with TFE fabric liner	51,500	–	15,000	0.0078 at at 25,000 cycles	–	358	
GL – 10	Glass – filament wound with TFE fabric liner	30,200	–	–	–		–	
GL – 11	Glass – filament wound with sprayed TFE liner	51,200	–	15,000	0.006 at 25,000 cycles	–	585	Testing continued to 50,000 cycles total wear 0.007
GL – 12	Glass – filament wound with sprayed TFE liner	51,200	–	15,000	0.0056 at 25,000 cycles	–	211	
GL – 13	Glass – filament wound with sprayed TFE liner	51,200		15,000	0.010 at 25,000 cycles	0.0018	293	
GL – 14	Glass – filament wound with sprayed TFE liner	51,200	–	15,000	0.004 at 25,000 cycles	–	195	
GL – 15	Glass – filament wound with sprayed TFE liner	51,200	–	15,000	0.040	–	121	Continuous contamination anti-icing fluid
GL – 16	Glass – filament wound with sprayed TFE liner	51,200	–	15,000	0.021 stopped at 8237 cycles	0.0044	488	Continuous contamination anti-icing fluid

TABLE 4. – (CONCLUDED)

O.D. 1.189
I.D. 1.000
Length –0.50

Specimen No.	Composition	Static		Dynamic				Comments
		Ultimate load, lb.	Permanent set, in.	Radial load, lb.	Wear, in.		Final torque in./lb.	
					Indicated	Measured		
GL – 17	Glass – filament wound with sprayed liner	51,200	–	15,000	0.0037	0.0033	244	Completed 25,000 cycles
GL – 18	Glass – filament wound / TFE fabric liner	41,700		15,000	–	0.0022	146	
GL – 19	Glass – filament wound / TFE fabric liner	41,700		15,000	–	0.0089 at 7798 ~	390	Continuous contamination anti-icing fluid
GL – 20	Glass – filament wound / TFE fabric liner	41,700		16,500	0.0230	0.0024	500	
GL – 21	Glass – filament wound / TFE fabric liner	41,700		16,500	0.0080	0.0027	171	
GL – 22	Glass – filament wound – TFE tape liner			16,500	0.0395	0.0128	341	Liner extruded
GL – 23	Glass – filament wound – TFE tape liner			12,500	0.0135	0.0118	1100	Stopped at 1750 cycles liner extruded
GL – 24	Glass – filament wound – TFE tape liner			12,500	0.0106	0.009	400	Lubed with MIL-G-2382 grease stopped at 5940 cycles

TABLE 5. – SCREENING TEST DATA – KEVLAR COMPOSITES

O.D. 1.189
I.D. 1.000
Length –0.50

Specimen No.	Composition	Static		Dynamic				Comments
		Ultimate load, lb.	Permanent set, in.	Radial load, lb.	Wear, in.		Final torque in./lb.	
					Indicated	Measured		
K – 25	Kevlar – filament wound / H3501 resin [a]	51,200	–	12,500	–	–	–	Delamination at 2200 cycles
K – 26	Kevlar – filament wound / H3501 resin with TFE filler [a]	44,300	–	12,500	–	–	–	Compression failure at 11,000 cycles
K – 27	Kevlar – filament wound / refcoa resin TFE filler	23,800	–	12,500	–	–		Compression failure at 7600 cycles
K – 28	Kevlar – filament wound / H3501 resin TFE filled ; 1st five plies	4,200	–	12,500	–	–	–	Delamination < 100 cycles
K – 29	Kevlar – filament wound / H3501 resin molded TFE liner	51,200	–	12,500	–	–	–	Liner worn through at 10,000 cycles
K – 30	Kevlar – filament wound / H3501 resin molded TFE liner	51,200	–	15,000	0.016 25,000 cycles 0.020 at 37,250 cycles		260	
K – 31	Kevlar – filament wound / H3501 resin molded TFE liner	51,200	–	15,000	0.012 at 25,000 cycles		244	
K – 32	Kevlar – filament wound molded TFE liner			15,000	0.012 at 25,000 cycles		171	

[a] Bore lined with Kevlar fabric and reinforced with longitudinal plies of Kevlar tape and circumferential plies of Kevlar fabric.

TABLE 5. – (CONTINUED)

O.D. 1.189
I.D. 1.000
Length –0.50

Specimen No.	Composition	Static		Dynamic				Comments
		Ultimate load, lb.	Permanent set, in.[a]	Radial load, lb.	Wear, in.		Final torque in./lb.	
					Indicated	Measured		
K – 33	Kevlar – filament wound molded TFE liner			15,000	0.0075 at 25,000 cycles		137	
K – 34	Kevlar – filament wound / TFE fabric liner	47,000	0.005	15,000	0.0070	0.0072	293	Liner extrusion 36,100 cycles
K – 35	Kevlar – filament wound / TFE fabric liner	47,000	0.005	15,000	0.0085 at 25,000 cycles .0100 at 50,000 cycles	0.010 at 50,000 cycles	293 293	Compression of backup
K – 36	Kevlar – filament wound / TFE fabric liner	47,000	0.005	12,375	0.0085	0.0069	268	Soaked in ant-icing fluid 24 hours at 160° F
K – 37	Kevlar – filament wound / TFE fabric liner	50,400	0.004	15,000	0.0065 at 25,000 cycles 0.009 at 36,000 cycles	0.0103	390	Liner extrusion
K – 38	Kevlar – filament wound / TFE fabric liner	50,400	0.004	1,500	0.0175 at 20,459	0.0106	195	Liner extrusion
K – 39	Kevlar – filament wound / sprayed TFE liner		0.0045	15,000	0.0025	[b]0.0028 [c]0.0012	244	

[a] Loaded to 31,400 lbs.

[b] Based on I.D. change

[c] Based on wall thickness change

TABLE 5. – (CONTINUED)

O.D. 1.189
I.D. 1.000
Length –0.50

Specimen No.	Composition	Static		Dynamic				Comments
		Ultimate load, lb.	Permanent set, in.[a]	Radial load, lb.	Wear, in.		Final torque in./lb.	
					Indicated	Measured		
K – 40	Kevlar – filament wound / sprayed TFE liner		0.0045	15,000	0.013	[b]0.0056 [c]0.0066	316	Continuous contamination with anti-icing fluid
K – 41	Kevlar – filament wound / sprayed TFE liner		0.0045	15,000	0.0100	[b]0.0054 [c]0.0088	439	
K – 42	Kevlar – filament wound / sprayed TFE liner		0.0045	15,000	0.0035	[b]0.0017 [c]0.0054	195	
K – 43	Kevlar – filament wound / sprayed TFE liner		0.0045	15,000	0.020	[b]0.0039 [c]0.0100	341	
K – 44	Kevlar – filament wound / TFE fabric liner	60,100	0.0087	16,500	0.0080		1000	
K – 45	Kevlar – filament wound / TFE fabric liner	60,100	0.0087	13,500	0.0119		1150	
K – 46	Kevlar – filament wound / TFE fabric liner	60,100	0.0087	13,500	0.0055		800	O.D. shimmed with 0.0023 foil to create interference fit
K – 47	Kevlar – filament wound / TFE fabric liner			16,500	0.0032	0.0059	293	

[a] Loaded to 31,400 lbs.

[b] Based on I.D. change

[c] Based on wall thickness change

TABLE 5. – (CONCLUDED)

O.D. 1.189
I.D. 1.000
Length –0.50

Specimen No.	Composition	Static		Dynamic				Comments
		Ultimate load, lb.	Permanent set,[a] in.	Radial load, lb.	Wear, in.		Final torque in./lb.	
					Indicated	Measured		
K – 48	Kevlar – filament wound / TFE fabric liner			12,375	0.0163		205	Soaked in Hyjet IV 24 hours at 160° F
K – 49	Kevlar – filament wound / TFE fabric			12,375	0.0095		195	Soaked in Hyjet IV 24 hours at 160° F
K – 50	Kevlar – filament[b] wound / TFE fabric liner			12,045	0.0259	0.0078	293	
K – 51	Kevlar – filament[b] wound / TFE fabric liner			12,045	0.0081	0.0084	146	
K – 52	Kevlar – filament wound / TFE fabric liner		0.0026 Ind. 0.0022 Meas.		–	–	–	–

---

[a] Loaded to 23,500 lb
[b] Bushing length 0.375

d. Miscellaneous Composites (Table 6)

During the course of the test program, a number of concepts were evaluated for further potential or for evaluation of wear characteristics of journal bearing bore liners. A description of the test specimens used in these evaluations follows:

M-53:	This was a commercial Kevlar filament wound/epoxy resin tubular product lined with a MIL-B-81934 qualified, sprayed and cured TFE-enriched liner.
M-54:	This was a product similar to that of M-53, but the filament winding represented an initial effort by the manufacturer of the qualified liner.
M-55:	This specimen was molded of a reinforced epoxy resin with TFE added to improve frictional properties. It is essentially the same material as the sprayed proprietary liner that the manufacturer has qualified to MIL-B-81934.
M-56:	This is another manufacturer's proprietary commercial product. It combines Kevlar filament reinforcing in an epoxy resin with a cure in closed dies to obtain compaction and sizing.
M-57:	This specimen was a CRES bushing with the proprietary MIL-B-81934 qualified liner of the manufacturer of specimens M-53 through M-56. It was used to establish a performance base for this product as a liner unaffected by the characteristics of a composite backup.
M-58:	This specimen could be described as a hybrid composite. It consisted of a perforated titanium reinforcing ring around which glass fiber/epoxy was built up to the appropriate 0.D. and that was lined with the same material as the preceding specimens.

2. QUALIFICATION TESTS TO MIL-B-81934

These tests were conducted to evaluate the most promising bearing concepts against the qualification test performance requirements specified in MIL-B-81934 for TFE-lined corrosion-resistant steel and aluminum journal bearings. It was the intent to determine whether across-the-board substitution of composite journal bearings for MIL-B-81934 bearings is feasible and, if not, to establish the limiting performance characteristics of these bearings for both existing applications in metallic structure and future advanced graphite composite structure. Testing included the following as covered by MIL-B-81934:

1) Radial static limit load – requirement per paragraph 3.5.1 – test per 4.6.1

2) Oscillation under radial load – requirement per paragraph 3.5.2 – test per 4.6.2

3) Fluid compatibility – requirement per paragraph 3.5.3 – test per 4.6.3

4) High temperature – requirement per paragraph 3.5.4 – test per 4.6.4

a. LINED GLASS/EPOXY

This product represents considerable process development, over the course of this program,

TABLE 6. – SCREENING TEST DATA – MISCELLANEOUS COMPOSITES

O.D. 1.189
I.D. 1.000
Length –0.50

Specimen No.	Composition	Static		Dynamic				Comments
		Ultimate load, lb.	Permanent set, in.	Radial load, lb.	Wear, in.		Final torque in./lb.	
					Indicated	Measured		
M – 53	Kevlar – filament wound / sprayed TFE liner	27,750	–	–	–	–	–	
M – 54	Kevlar – filament wound / sprayed TFE liner	23,625	–	–	–	–	–	
M – 55	Molded TFE	17,800	–	–	–	–	–	
M – 56	Kevlar – filament wound / TFE fabric liner	12,725	–	–	–	–	–	
M – 57	Steel / sprayed TFE liner			16,500	0.0013	0.0016	254	
M – 58	Glass / T_1 / sprayed TFE liner			16,500	0.0219	0.0210	488	Glass back-up yielded

of the commercial proprietary product of a bearing manufacturer. This manufacturer also has qualified both TFE-lined journal bearings and spherical bearings against the pertinent military specifications. The specimens tested were fabricated by the process detailed in section VI 4. The liner was style 1032 satin weave Teflon and Dacron, the resin was Dow DER 332 epoxy, and the reinforcement was helically wound continuous fiber E-glass yarn. The results of this testing are shown in tables 7 and 8. The manufacturer is designated "source R".

b. Lined Kevlar/Epoxy

This product was an additional development by source R. Manufacturing techniques were similar to the above but used Kevlar fibers in place of glass and style 1497 taffeta weave Teflon and Dacron fabric for the liner. Data from this testing are presented in tables 9 and 10.

c. Integral Liner Glass/Epoxy

This product was introduced late in the program after promising screening tests. It is a relatively new commercial product of a firm, source G, that has not previously manufactured specification bearings for the airframe industry. The product is proprietary, but examination and released information indicate that fabrication and materials used are similar to the commercial product of source R. The primary difference is in the liner approach. This source essentially weaves the liner in place on the mandrel as an initial step in the overall filament winding process. Results of the testing against MIL-B-81934 requirements are shown in table 11.

3. ADDITIONAL TESTING

Besides the qualification testing, certain additional tests were conducted on the most promising composite journal bearing concepts. These included retention tests and weight evaluations for comparison with currently used metallic journal bearings.

a. Retention Tests

Both interference fit retention and the molded-in-place shear ring retention concepts were evaluated. Test results are tabulated in table 12 for the interference fit tests and in table 13 for the shear ring tests.

b. Composite Journal Bearing Weight

A number of different bearings were weighed, including various composites as well as metallic journal bearings. The values obtained are tabulated in table 14 against published values for standard metallic journal bearings.

c. Spherical Bearings

Adaptation of the composite journal bearing concept investigated in this program was applied to the outer race of a plain spherical bearing. Bearings meeting the MS14104-14

TABLE 7. – STATIC OSCILLATING, AND FLUID COMPATIBILITY TEST DATA – GLASS/EPOXY COMPOSITES

Test Description	Specimen Number	Test Results			
		Static Tests			Comments
Radial static limit load	TL – 1	0.003 permanent set			
1300 lb preload, loaded to 31,400 lb	TL – 2	0.004 permanent set			
unloaded to 1,300 lb	TL – 3	0.004 permanent set			
Radial static ultimate load	TL – 4	49,600 lb			
loaded to yield	TL – 5	50,100 lb			
	TL – 6	46,000 lb			
Dynamic tests		Dynamic Tests			
25° oscillation, 20 cpm, 25,000 cycles		Indicated Wear	Measured Wear	Final Torque	
16,500 lb radial load	TL – 7	0.0110	0.0077	219.027	
	TL – 8	0.0098	0.0029	146.018	
	TL – 9	0.0145	0.0067	[b]341.041	
[a]Fluid compatibility	TL – 10	0.0058	0.0052	244.032	
24 hour soak in hyjet IV at	TL – 11	0.0044	0.0046	268.043	
160° F					
12,375 lb radial load	TL – 12	0.0053	0.0053	[b]450.073	
[a]Fluid compatibility	TL – 13	0.0114	0.0136	[b]600.096	Stopped at 6792 cycles
Fluid TT – 5–735 type VII at 110° F	TL – 14	0.0020	0.0012	122.020	
12,375 lb radial load	TL – 15	0.0062	0.0071	244.039	

[a]Soak prior to installation

[b]Test run on 60 KIP machine, others run on seven station machine

TABLE 7. – (CONCLUDED)

Test Description	Specimen No.	Dynamic Test Results			
		Indicated Wear	Measured Wear	Final Torque	Comments
[a]Fluid compatibility 24 hour soak in lube oil MIL–L–7808 at 160° F 12,375 lb radial load	TL–16	0.0113	0.0098	[b]900.151	stopped at 5085 cycles
	TL–17	0.0107	0.0020	195.032	stopped at 4925 cycles
	TL–18	0.0065	0.0019	244.040	
[a]Fluid compatibility 24 hour soak in hydraulic oil MIL–H–5606 at 160° F 12,375 lb radial load	TL–19	0.0115	–	[b]1400.226	stopped at 4705 cycles
	TL–20	0.0090	0.0061	171.028	
	TL–21	0.0090	0.0036	171.028	
[a]Fluid compatibility 24 hour soak in anti-icing fluid MIL–A–8243 at 160° F 12,375 lb radial load	TL–22	0.0075	0.0065	[b]650.105	
	TL–23	0.0205	0.0053	268.043	
	TL–24	0.0025	0.0058	146.024	
[a]Fluid compatibility 24 hour soak in anti-icing fluid	TL–25	0.0085	0.0055	[b]600.119	
	TL–26	0.0065	0.0036	355.048	
	TL–27	0.0060	0.0035	122.021	

[a] Soak prior to installation

[b] Test run on 60 KIP machine, others run on seven station machine

TABLE 8. – HIGH TEMPERATURE TEST DATA – SOURCE R – GLASS/EPOXY COMPOSITE

Specimen Number	Test Conditions			Test Results				Comments
				Wear, in.		Coeff. of friction		
	Temp., °F	Load lb	Osc. cycles	Indicated	Measured	Maximum	Average	
TL–45	+325	16,500	1,000	0.0185	0.0179	0.099	0.060	Heavy extrusion of liner and backup
TL–44	+325	12,375	25,000	0.0031	0.0042	0.100	0.045	Light extrusion of liner and backup
TL–42	+325	12,375	25,000	0.0059	0.0140	0.139	0.080	Heavy extrusion of liner – light extrusion of backup
TL–41	+250	12,375	25,000	0.0018	0.0035	0.119	0.050	Moderate extrusion of liner
TL–43	+250	12,375	25,000	0.0036	0.0039	0.150	0.081	Light extrusion of liner

TABLE 9. – STATIC OSCILLATING, AND FLUID COMPATIBILITY TEST DATA – SOURCE R – KEVLAR/EPOXY COMPOSITE

Test Description	Specimen Number	Test Results			
		Static Tests			Comments
Radial static limit load 1300 lb preload, loaded to 31,400 lb unloaded to 1,300 lb	RKDF – 8 RKDF – 9	0.003 permanent set 0.003 permanent set			
Radial static ultimate load loaded to yield	RKDF – 10 RKDF – 11	69,100 lb 68,300 lb			
Dynamic tests		Dynamic Tests			
25° oscillation, 20 cpm, 25,000 cycles		Indicated Wear	Measured Wear	Final Torque	
16,500 lb radial load	RKDF – 1	0.0053	0.0050	244	
	RKDF – 4	0.0112	0.0070	366	
	RKDF – 5	0.0090	0.0098	244	
ᵃFluid compatibility	RKDF – 12	–	–	–	Damaged during installation
24 hour soak in hyjet IV at 160° F 12,375 lb radial load	RKDF – 13	0.0255	–	341	
ᵃFluid compatibility	RKDF – 14	0.0021	0.0046	234	
24 hour soak in standard test Fluid TT – 5–735 type VII at 110° F 12,375 lb radial load	RKDF – 15	0.0092	0.0043	73	
ᵃFluid compatibility	RKDF–16	0.0095	0.0008	166	
24 hour soak in lube oil MIL–L–7808 at 160° F 12,375 lb radial load	RKDF–17	0.0095	0.0064	73	
ᵃFluid compatibility	RKDF–18	0.0105	0.0042	205	
24 hour soak in hydraulic oil MIL–H–5606 at 160° F 12,375 lb radial load	RKDF–19	0.0035	0.0034	146	
ᵃFluid compatibility	RKDF– 6	0.0132	0.0058	317	
24 hour soak in anti-icing fluid MIL–A–8243 at 160° F 12,375 lb radial load	RKDF– 7	0.0096	0.0083	195	

[a] Soak prior to installation

TABLE 11. – STATIC OSCILLATING, AND FLUID COMPATIBILITY TEST DATA – SOURCE G – GLASS/EPOXY COMPOSITE

Test Description	Specimen Number	Test Results			
		Static Tests			Comments
Radial static limit load	GM – 1	0.0032 permanent set			
1300 lb preload, loaded to 31,400 lb	GM – 2	Yielded at 29,300 lb.			
unloaded to 1,300 lb	GM – 3	Yielded at 27,100 lb.			
Radial static ultimate load	GM – 4	38,700 lb			
loaded to yield	GM – 5	29,300 lb			
	GM – 6	27,100 lb			
Dynamic tests		Dynamic Tests			
25° oscillation, 20 cpm, 25,000 cycles		Indicated Wear	Measured Wear	Final Torque	
16,500 lb radial load	GM – 7	0.0040	0.0028	244	
	GM – 8	0.0023	0.0025	146	
	GM – 9	0.0043	0.0029	249	
^a^Fluid compatibility	GM – 10	0.0115	0.0040	244	
24 hour soak in hyjet IV at	GM – 11	0.0038	0.0056	268	
160° F	GM – 12	0.0047	0.0044	219	
12,375 lb radial load					
[a]Fluid compatibility	GM – 13	–	0.0016	180	
24 hour soak in standard test	GM – 14	0.000	0.0030	146	
fluid TT–5–735 type VII at 110° F	GM – 15	0.0074	0.0010	156	
12,375 lb radial load					
[a]Fluid compatibility	GM–16	0.0118	0.0028	341	
24 hour soak in lube oil	GM–17	0.0069	0.0021	351	
(MIL–L–7808) at 160° F	GM–18	0.0017	0.0022	478	
12,375 lb radial load					
[a]Fluid compatibility	GM–19	0.0045	0.0029	293	
24 hour soak in hydraulic oil	GM–20	0.0038	0.0026	268	
MIL–H–5606 at 160° F	GM–21	0.0075	0.0038	366	
12,375 lb radial load					
[a]Fluid compatibility	GM–22	0.0040	0.0024	244	
24 hour soak in anti-icing fluid	GM–23	0.0025	0.0022	122	
MIL–A–8243 at 160° F	GM–24	0.0050	0.0022	171	
12,375 lb radial load					

[a]Soak prior to installation

Table 12. – INTERFERENCE FIT RETENTION TESTS

Bearing Material	Bearing O.D. In.	Housing Bore I.D. In.	Fit	Pushout Load Lb.
[a]Kevlar				
–1	1.1900	[b]1.1882	[c]–0.0018	289
–2	1.1900	[b]1.1882	[c]–0.0018	180
–3	1.1900	[b]1.1882	[c]–0.0018	194
[d]Glass				
–1	1.1905	[e]1.1893	[c]–0.0012	133
–2	1.1905	[e]1.1893	[c]–0.0012	130
–3	1.1901	[e]1.1890	[c]–0.0011	101
[f]Aluminum				
–1	1.1893	[b]1.1882	[g]–0.0011	763
–2	1.1891	[b]1.1882	[g]–0.0009	570
–3	1.1895	[b]1.1882	[g]–0.0013	770

[a] Vendor –R Kevlar/epoxy composite

[b] Housing 15-5 PH Cres

[c] Press installation

[d] Vendor –R glass/epoxy composite

[e] Housing 7075 AL

[f] Boeing standard bearing

[g] Shrink installation

TABLE 13. – SHEAR RING RETENTION TESTS

Vendor R glass/epoxy –16 bushings
Bonded into 7075–T6 housing – with mating grooves
filled with bonding material, BMS 5–26 B2

Specimen Number	Load cycle prior to testing	Environmental exposure	Pushout load, lb
[b]4	1000 reverse load cycles at 15,000 lb	None	–[a]
[b]5			–[a]
[bc]6			226
[d]7	1000 reverse load cycles at 10,000 lb	48 hrs in 5% salt spray at 95° F	204
[d]8			205
[d]9			193

[a] Bushing failed during 15,000 lb load cycle

[b] Chromic acid anodized

[c] Reduced reverse load to 10,000 lb

[d] Chromic acid anodized + corrosion resistant primer

TABLE 14. – JOURNAL BEARING WEIGHT COMPARISON

Bearing Description	Bearing Weight Lb/In.
Vendor G – glass/epoxy – TFE fabric lined	.022
Vendor R – glass/epoxy – style 1032 TFE fabric liner	.022
Vendor R – glass/epoxy – vendor K sprayed TFE liner	.022
Vendor R – Kevlar/epoxy – style 1497 TFE fabric liner	.016
Vendor R – Kevlar/epoxy – style 1032 TFE fabric liner	.016
Vendor T – graphite/epoxy – TFE fabric liner	.015
Steel	.097
Bronze	.105
Aluminum	.032

Note: All weights are based on an M/81934/1–16–032 geometry (1 in. bore, 1 in. long) configuration were fabricated by filament winding techniques similar to those used on journal bearings. However, the journal bearing cylindrical mandrel was replaced with a built-up mandrel with several balls positioned on a shaft. A TFE-fabric liner was first placed over the balls and then the outer race was built up by winding glass filament yarns impregnated with an epoxy resin. After curing, the lay-ups were machined to the final bearing configuration.

Testing was limited to radial static loading as prior work had shown deficiencies in this loading mode due to splitting of the outer race from the opposed axial load components. Testing was conducted per paragraph 3.5.1 of MIL-B-81820. The specified Radial Static Limit Load for the MS14104-14 bearing is 62,200 pounds, deflection under load is limited to 0.020 inches and permanent set to 0.003 inches. In addition, at an Ultimate Static Load of 1.5 times the Radial Static Limit Load no fracture of a bearing component is permitted.

The first bearing tested failed by outer race fracture at 60,700 pounds. Since failure was below 62,200 pounds, it was not possible to get an appropriate permanent set value. Since failure was, by definition, an ultimate failure the second bearing was first loaded to two thirds of 60,700 pounds to get a permanent set value of 0.0052 inches. This bearing was then reloaded to failure, which again was by race splitting and occurred at 64,400 pounds.

SECTION VIII
EVALUATION OF TEST RESULTS

Many of the potential applications for composite journal bearings currently use TFE-lined journal bearings controlled by MIL-B-81934. Accordingly, the performance levels represented in this specification were used heavily in the evaluation of the test results on composite journal bearings in this program. Two other considerations of primary significance were the potential to reduce weight and to reduce corrosion problems through the use of composites. Elevated temperature performance was considered as desirable but not essential, since most current applications of structural journal bearings are not in high-temperature areas. Cost, fabricability, availability, design risks, and maintenance-free life were all considered.

1. MOLDED REINFORCED PLASTIC RESIN COMPOSITES

None of the molded composite specimens demonstrated adequate strength when evaluated against the MIL-B-81934 requirements of 20,000 pounds Static Limit Load for aluminum bearings, 31,400 pounds Static Limit Load for CRES bearings, and 16,500 pounds Oscillation Load. Source R specimens had a maximum failure load of 21,400 pounds and a compressive strength failure after 10 cycles of oscillation under a reduced load of 12,500 pounds. Source K specimens failed at an Ultimate Load of 17,800 pounds, well below the desired limit load. The molded filament-reinforced specimen from source B reached only 12,725 pounds before failure. These results, published data, and previous experience led to the conclusion that there is little potential for molded composites at the MIL-B-81934 load levels. Although applications exist where the attributes of molded composite material bushings can be efficiently used, such investigations were beyond the scope of this program.

2. FILAMENT REINFORCED PLASTIC RESIN COMPOSITES

Early in the program, it was decided that it would be advantageous to obtain maximum involvement of established bearing manufacturers. Such involvement provided a two-way learning opportunity, reasonable cost information, and established availability and fabrication capabilities. Because of this involvement, data and data scatter more nearly represent production hardware than could data available from prototype laboratory hardware. In the interests of clarity, evaluation of these test data will start with the initial in-house fabricated specimens and follow into the work done with the specimens from contributing bearing manufacturers.

a. In-House Fabricated Composites

Initial work was done with various layups of graphite and resin. Filament winding was basically used with plies of either fabric or unidirectional tape interspersed to obtain longitudinal strength. Although potential for adequate static strength was shown, wear and friction properties were poor and edge loading, due to alignment or flexure of the pin, produced progressive compressive failures. It was evident that a liner, such as that used in MIL-B-81934, was in order. Corrosion studies had indicated that graphite composites could not be successfully used in metallic structure without highly sophisticated corrosion preventive systems.

Studies had indicated that E-glass/resin composites had excellent strength potential and that filament windings with TFE-fabric liners could meet the somewhat lower requirements of the predecessor specification to MIL-B-81934. Previous experience had shown such a product to be inert and suitable for use in metallic aircraft structure without electrolytic corrosion problems. Further, these studies indicated that DuPont's Kevlar 49 filament had exceptional strength-to-weight properties and was basically inert as such plastic materials as Teflon, Dacron, and Nomex. Accordingly, any further efforts generally involved substituting Kevlar or glass for graphite in the composite specimens.

The Kevlar composite specimens showed excellent strength characteristics – about equal to the graphite composites. Wear tests were considerably better than with graphite but, even with TFE powder additives, life was far short of the 25,000 cycles required. This was a further indication that a MIL-B-81934 type self-lubricating liner was in order. It was at this point that it was decided to call on the experience and fabrication capabilities of the bearing manufacturers.

b. Source R

This bearing manufacturer has been engaged in volume production of close dimensional control E-glass filament-wound/epoxy resin journal bearings for a number of years. Their products have been used primarily in commercial applications such as farm machinery and recreational vehicles. Their manufacturing techniques and equipment, however, were adaptable to various resins, reinforcing fibers, and liner combinations.

(1) Glass/Epoxy Composites

Tests of source R fabricated glass/epoxy journal bearings incuded two different liners. One was their commercial liner using the style 1032 fabric and the other was their MIL-B-81934 qualified style 1497 liner. In addition, fabric liners were stripped from some specimens and source K applied their MIL-B-81934 qualified liner to the bore. All of the above specimens indicated adequate strength in screening tests. Wear tests typically indicated 0.006-inch wear as opposed to the specification allowable of 0.0045 inch.

In the MIL-B-81934 qualification tests, all of the above specimens performed in similar fashion. In the Radial Static Limit Load tests, permanent set is typically 0.003 inch rather than the specified 0.002 inch. In the Oscillation test and Fluid Compatibility tests, the indicated wear averaged about twice that allowed by the specification. In all instances, it appears that the indicated wear values are influenced by the anelastic properties of the composite. Before and after measurements of the wall thickness of the specimens in the loaded zone indicate actual wear well within the specification requirements. In the elevated temperature tests of source R journal bearings with style 1497 fabric liners it was necessary to reduce the test temperature from the specified 325° F to 250° F to meet the wear/life requirement. Excessive wear and extrusion of the liner and the composite backup occurred at temperatures above 250°F and at loads above the 12,375 pounds specified in MIL-B-81934. Results of the MIL-B-81934 qualification tests are summarized in tables 7 and 8.

(2) Kevlar/Epoxy Composites

Tests of source R fabricated Kevlar/epoxy journal bearing specimens were conducted using their MIL-B-81934 qualified liner. These specimens were the lightest weight of all those evaluated, but had similar strength, wear, and fluid resistance characteristics to the glass/epoxy composite specimens. Since the qualified liners have adequately demonstrated performance to the specification in metallic bearings, it must be concluded that the variations in permanent set and apparent wear must be attributed to the composite. No significant damage to the composite structure has been noted in any of the qualification tests, including Fluid Compatibility tests. We conclude that a portion of the permanent set and the apparent wear readings is due to time-dependent strain. In the elevated temperature tests of these bearings it was found necessary to limit loading to 12,375 pounds, per MIL-B-81934, and the test temperature to 250°F rather than the specified 325°F. Results of the MIL-B-81934 qualification testing are summarized in tables 9 and 10.

Performance of a molded liner, similar to the liner of source K but not qualified to MIL-B-81934, in source R Kevlar/epoxy specimens was similar to the other liners included in the evaluation. These liners have the obvious advantageous characteristic of permitting machining after bearing installation. This feature permits obtaining optimum bearing alignment and pin fit without holding tight expensive bore tolerances at bearing manufacture.

c. Source K

This manufacturer has no in-house capability for filament winding. Their laboratory attempt and application of their liner in purchased tubular filament-wound Kevlar/epoxy composite specimens produced results well below the required strength level. It is desirable that this firm develop in-house winding capabilities or appropriate outside support since their proprietary liner has all of the desired attributes.

d. Source L

This manufacturer has recently built a laboratory-oriented filament winding machine. This device appears to be an excellent development tool, but initial Kevlar/epoxy composite journal bearing specimens had inadequate strength.

e. Source G

This manufacturer has not been active in the past in the production of airframe structural journal bearings. Specimens evaluated were a proprietary design using glass filament-wound reinforcement and an epoxy resin matrix. The test results indicated similar performance under Static Load as obtained in the other MIL-B-81934 qualification tests. The Oscillating and Fluid Compatibility tests essentially met the requirements of the specification. We attribute the excellent performance to the unique process whereby the liner is woven in place on the mandrel as part of the filament winding process. A high degree of homogeneity is obtained with no obvious bondline between liner and backup. We were unable to remove this liner mechanically or with chemical solvents without totally destroying the specimen. Results of the MIL-B-81934 qualification testing are summarized in Table 11.

3. GENERAL CONSIDERATIONS

a. Installation and Retention

No difficulties were evident in installing specimens in test housings, even when using heavy interference fits as recommended by manufacturers of plastic bearings. Retention with such fits is adequate, but push-out values are lower than with metallic bushings and journal bearings. Bore close-in must be considered in sizing the journal bearings and is equal to the interference between bearing 0.D. and housing I.D. In this respect, the sprayed or molded liners are desirable since they permit sizing after installation.

b. Weight

All composite bearings evaluated offer significant weight savings when evaluated on a size-per-size basis against metallic journal bearings. The three most promising concepts offer up to 80% weight saving on this basis.

c. Corrosion

All of the most promising composite journal bearings will provide improved corrosion resistance in metallic structure and no corrosion problems in advanced graphite or other nonmetallic composite structure.

d. Spherical Bearings

The results of the work done in this program indicates that composite outer race spherical bearings have a static load capability of two thirds that of their MIL-B-81820 counterparts. Retention by outer race grooving and staking over the receiving housing is not practical. Interference fit retention will produce high breakaway torques while bonding will create additional limitations. The weight saved by utilizing a composite outer race is not significant in terms of the total bearing weight. From the above, it is seen that composite outer race spherical bearings can not be used as a direct substitute for MIL-B-81820 bearings.

SECTION IX
CONCLUSIONS AND RECOMMENDATIONS

1. CONCLUSIONS

Kevlar composite and glass fiber composite journal bearings have the best combination of properties and performance characteristics for use in advanced graphite composite structure and conventional metallic structure. Graphite composite journal bearings are not suitable for these applications. Detailed evaluations of the journal bearing materials evaluated in this program follow.

a. Graphite Composites

The suitability of graphite composites for structural airframe use is limited for the following reasons:

1) A serious electrolytic corrosion problem would exist when used in conventional metallic airframe structure, due to the extreme noble nature of the graphite.

2) At the present time and in the forseeable future, graphite composites would be the most expensive of the suitable composites considered.

3) Graphite fibers have insufficient ductile elongation to accept journal bearing edge loading due to pin misalignment or pin bending. Partial alleviation of this problem can be obtained by use of bell-mouthing or with resilient self-lubricating liners.

From the friction and wear tests, we conclude that graphite composites without liners are unsuitable for use in airframe structural applications. Friction, wear rates, and mating surface damage from abrasion are not acceptable, regardless of fiber orientation, in the context of MIL-B-81934 journal bearings. The controversy on filament direction versus friction and wear becomes academic; however, we conclude that both friction and wear are minimized when rubbing against the circular surface of the fibers oriented at between 30° and 60° to the rubbing direction.

Graphite composite journal bearings had the lowest weight of all material concepts evaluated with the exception of the Kevlar/epoxy composites.

b. Molded Composites

None of the molded composites evaluated had adequate structural strength in the context of MIL-B-81934 and airframe structural joint design loads. Further evaluation of molded composites was outside the scope of this program. Random orientation chopped fiber, chopped fabric, or particulate resin reinforcement do not offer strength characteristics nearly as great as continuous filament fiber reinforcement.

c. E-Glass/Epoxy Composites

It is concluded that glass-reinforced composites have potential for use in airframe structural applications for the following reasons:

1) Minimum cost of composites evaluated

2) No corrosion problems with metallic or composite structure

3) Weight saving over metallic bearings, but not as much as with graphite or Kevlar composites

4) Minimum design risk due to broad base of manufacturers' experience

5) Readily available – existing multiple sources

6) Strength equal to best of materials evaluated and potential for further development

7) Wear characteristics of MIL-B-81934 with suitable liner in bore

8) *Satisfactory retention* by *currently* used *interference* fit techniques

d. Kevlar/Epoxy Composites

These composites have the highest potential of all materials evaluated for use in structural journal bearings in both metallic and composite airframe structure for the following reasons:

1) Minimum weight

2) Intermediate cost to glass and graphite composites, decreasing as volume use increases

3) No corrosion problems in metallic or composite structure

4) Manufacturers' techniques and equipment suitable for adapting from E-glass winding to Kevlar winding

5) Strength equal to best of materials evaluated and demonstrated potential for further development

6) Wear characteristics of MIL-B-81934 with suitable liner in bore

7) Satisfactory retention by currently used interference fit techniques

e. General Conclusions

During the course of this program, several things were observed worthy of note:

1) The simplest solution to a self-lubricated composite journal bearing substitute for MIL-B-81934 journals is a lined composite bearing.

2) Addition of lubricating materials to the resin in a composite may improve friction and wear characteristics but decreases strength.

3) Composite journal bearings do not easily lend themselves to measuring techniques used with metallic parts, since they do not have the same dimensional stability in the free state.

6

4) Deflections under load are time dependent, resulting in erroneous readings of permanent set and wear.

5) Ultimate Strength values are more useful than Offset Yield Strength values because a definite yield point is not always indicated in test.

6) Elevated temperature characteristics of both glass fiber and Kevlar fiber reinforced filament wound epoxy composite journal bearings presently limit use to 250°F.

7) From the corrosion aspect, any of the composite materials considered are suitable to meet the primary objectives of this program. Where metallic structure is involved, as in the secondary program objectives, Kevlar and glass composite are suitable – graphite composites are not because of their extremely noble nature and resulting electrolytic corrosion.

8) Predictions of accurate cost figures for composite journal bearings in production quantities are difficult to make. The factors that affect these costs are material prices, processing difficulty, and degree of acceptance which will result in economical quantity production. Glass composite journal bearings are currently in quantity use in a number of non-aircraft applications. Even with tightened specifications and quality controls instituted for aircraft use, this product cost will not exceed that of the MIL-B-81934 lined metallic journal bearings. Due primarily to increased processing costs, Kevlar filament reinforced journal bearings are priced at 2.2 times the cost of the glass fiber bearings. Due to both higher material and manufacturing costs, graphite journal bearings cost between five and ten times the cost of the glass fiber counterparts. With manufacturing experience resulting from quantity use and production, Kevlar and graphite composite filament wound parts should drop somewhat but the cost order of ranking will not change.

9) Composite journal bearings with graphite, Kevlar, or glass reinforcing fibers can provide significant weight savings if used to replace currently used aluminum or corrosion resistant steel lined bearings and save even more weight when replacing lubricated

bronze bearings. Table 14 illustrates the weight differences when the materials are related to a standard MIL-B-81934 geometry bearing. To further emphasize the weight difference, the data indicates that a graphite bearing will be 14.3%, a Kevlar bearing 15.2%, and a glass bearing 20.9% the weight of a similarly dimensioned bronze bearing. When compared to an aluminum TFE-lined bearing the figures are 46.9%, 50.0% and 68.8%, respectively.

2. RECOMMENDATIONS

The following recommendations are made as a result of this program:

1) A military specification should be released covering filament-wound resin matrix composite journal bearings. A draft of such a specification is appended to this report.

2) Development work should be continued to improve resin to Kevlar filament bonding in order to realize the full potential reinforcement capability of Kevlar fiber. This work should include investigation of wetting techniques, filament prebond treatment such as "scrubbing" for lubricant removal, and optimum fiber-to-resin ratios and cure cycles.

3) Data of this report should be supplemented for release in Design Guide format for design use.

4) Manufacturing techniques should be developed for producing flanged configuration journal bearings.

5) The work initiated in this program in adapting the journal bearing configuration to the plain spherical bearing outer race configuration should be continued and expanded. A great deal of potential in corrosion control and weight saving exists in plain spherical bearings. Such work should include evaluation of methods to reduce the ball weight in spherical bearings.

6) Improved elevated temperature properties should be investigated with additional resins, such as polyimides.

REFERENCES

1. "Bearings, Sleeve, Plain and Flanged, Self-Lubricating," MIL-B-81934, September 14, 1973.

2. Long, W. C., Stafford, D. K., and Lang, L. A.: *Graphite/Thermoplastic Bearings: State-of-the-Art*, Babcock & Wilcox Co., October 1974.

3. Giltrow, J. P.: *A Design Philosophy for Carbon Fibre Reinforced Sliding Components*, Tribology, February 1971.

4. Giltrow, J. P., and Lancaster, J. K.: *Carbon-Fibre Reinforced Polymers as Self-Lubricated Materials*, May 1968.

5. Sliney, H. E., and Johnson, R. L.: "Graphite-Fiber Polyimide Composites for Spherical Bearings to 340° C (650° F)," NASA TN D-7073, November 1972.

6. "Boeing Design Standards," D-5000, vol 81B3, sec. 510 December 22, 1977 and Sec. 520 September 20, 1977.

7. "Airforce Systems Command Design Handbook 2-1," Airframe Chapter 6, "Airframe Bearings." April 1, 1972.

8. "Bearings, Plain, Self-Aligning, Self-Lubricating, Low Speed Oscillation," MIL-B-81820; March 31, 1972.

9. Preprint "Corrosion Behavior of Metal Fasteners in Graphite-Epoxy Composites," Air Force Materials Laboratory, February 1975.

GLOSSARY

Advanced composites is an emerging technology and some of the terms may seem foreign to the experienced aircraft designer. This section defines the terms used in this report.

Advanced Composites	Advanced composites are defined as composite materials made by imbedding high-strength, high-modulus fibers within an essentially homogeneous matrix. See Filamentary Composites.
Anelasticity	A characteristic exhibited by certain materials in which strain is a function of both stress and time, such that while no permanent deformations are involved, a finite time is required to establish equilibrium between stress and strain in both loading and unloading directions.
Anisotropic	Not isotropic; having mechanical and/or physical properties that vary with direction relative to natural reference axes inherent in the material.
B-Stage	An intermediate cure stage of a thermal setting resin, that is between completely uncured and completely cured. Graphite/epoxy prepreg is supplied in a B-stage condition wherein the amount of curing varies among different material suppliers. The degree of B-staging will also change (advance) as a prepreg material ages.
Cocuring	The act of curing a composite laminate and simultaneously bonding it to some other prepared surface during the same cure cycle.
Composite Material	Composites are considered to be combinations of materials differing in composition or form. The constituents retain their own identities in the composite; that is, they do not dissolve or otherwise merge completely into each other although they act together. Normally, the components can be physically identified.
Continuous Filament Yarn	A bundle of two or more continuous filaments in a single continuous strand.
Crazing	The development of a multitude of very fine cracks in the matrix material.
Crossply	Any filamentary laminate that is not uniaxial.

Cure	To permanently change the properties of a resin system as a result of a controlled chemical reaction, usually heat and pressure. This is a nonreversible process.
Delamination	The separation of the layers in a laminate, or the separation of the face sheet from the core in sandwich construction.
Fabric	A material constructed of interlaced yarns, fibers, or filaments, usually a planar structure. Nonwovens are sometimes included in this classification.
Fiber	A single homogeneous strand of material, essentially one-dimensional, used as a principal constituent in advanced composites becaue of its high axial strength and modulus.
Fiber Content	The amount of fiber present in a composite. This is usually expressed as a percentage volume fraction or weight fraction of a cured composite.
Fiber Direction	The orientation or alignment of the longitudinal axis of the fiber with respect to a stated reference axis.
Filament	Fiber that is characterized by extreme length, such that there are normally no filament ends within a part except at geometric discontinuities. Filament bundles (yarn) are used in the filament winding process.
Filamentary Composites	A form of advanced composites in which the fiber constituent consists of continuous filaments.
Filament Winding	An automated process in which continuous filament (or tape) is treated with resin and wound in a pattern on a removable mandrel.
Fill	Yarn oriented at right angles to the warp in a woven fabric.
Filler	A second material added to a basic material to alter its physical, mechanical, thermal, or electrical properties. Sometimes used specifically to mean particulate additives.
Finish	A treatment applied to the fibers to improve the bond between the fiber surface and the resin matrix in a composite material.
FRC	Filament-reinforced composite.
Glass	All reference to glass is in reference to the fibrous form of glass, as used in filaments, woven fabric, yarns, mats, and chopped fibers.

Glass Cloth	Conventionally woven glass fiber material.
Hand Layup	A process in which components are applied to the mold, and the composite is built up and worked by hand.
Hybrid	A composite laminate composed of two or more composite material systems, such as graphite/epoxy with glass/epoxy.
Inclusions	Foreign material particles, chips, films, etc. of varying sizes that are inadvertently left in the layup.
Interlaminar	Descriptive term pertaining to some object (e.g., voids), event (e.g., fracture), or potential field (e.g., shear stress) referenced as existing or occurring between two or more adjacent plies.
Interlaminar Shear	Shearing force tending to produce a relative displacement between two plies in a laminate along the plane of their interface.
Isotropic	Having uniform properties in all directions. The measured properties of an isotropic material are independent of the axis of testing.
Laminate	A product made by bonding together two or more layers (plies) of material.
Laminate Orientation	The configuration of a crossplied composite laminate with regard to the angles of crossplying, the number of plies at each angle, and the exact sequence of the individual plies.
Layup	A process of fabrication involving the placement of successive layers of material.
Mandrel	A form fixture or male mold used for the base in the production of a part by layup or filament winding.
Matrix	The essentially homogeneous material in which the fibers or filaments of a composite are imbedded.
Microcracking	The existence of microscopic cracks in a matrix (crazing).
Pin Holes	Small cavities that penetrate the surface of a cured part.
Ply	A single layer of tape or fabric.
Ply Wrinkle	A condition where one or more of the plies are permanently formed into a ridge, depression, or fold.

Porosity	A condition of trapped pockets of air, gas, or void within a solid material, usually expressed as a percentage of the total nonsolid volume to the total volume (solid + nonsolid) of a unit quantity of material.
Prepreg (or Preimpregnated)	A combination of mat, fabric, or nonwoven material, with resin, processed to the B-stage, ready for curing.
Resin	The epoxy matrix in which the fibers are imbedded.
Resin Content	The amount of matrix present in a composite either by percent weight or percent volume.
Resin Richness	An area of excess resin, usually occurring at radii, steps, and the chamfered edge of core.
Resin Starved	An area deficient in resin, usually characterized by excess voids and/or loose fibers.
Symmetrical Laminate	A composite laminate in which the ply orientation is symmetrical about the laminate midplane.
Tape	Material in which the filaments are laid in a single direction within a resin matrix.
Tow	Same as Yarn.
Vacuum Bagging	A process in which the layup is compacted under pressure generated by drawing a vacuum in the space between the layup and a flexible sheet placed over it that is sealed at the edges.
Void	An empty, unoccupied space in an assembly. Voids are associated with bridging and resin-starved areas.
Warp	The longitudinally oriented yarn in a woven fabric (see Fill); a group of yarns in long lengths and approximately parallel.
X-Axis	In composite laminates, an axis in the plane of the laminate that is used as the 0° reference for designating the angle of the plies.
XY Plane	In composite laminates, the reference plane parallel to the plane of the laminate.
Y-Axis	In composite laminates, the axis in the plane of the laminate that is perpendicular to the X-axis.

Yarn	Strands of fibers or filaments in a form suitable for weaving or otherwise intertwining to form a fabric.
Z-Axis	In composite laminates, the reference axis normal to the plane of the laminate.

APPENDIX

MIL-B-XXXX

MILITARY SPECIFICATION (PROPOSED)

BEARINGS, FRP COMPOSITE, SLEEVE, PLAIN AND FLANGED, SELF-LUBRICATING

1. SCOPE

1.1 This specification covers fiber-reinforced plastic (FRP) composite plain and flanged sleeve bearings that are self-lubricating by incorporating tetrafluoroethylene (TFE) in the FRP composite or in a liner in the bore for use in a temperature range of -65°F to +250°F.

2. APPLICABLE DOCUMENTS

2.1 The following documents, of the issue in effect on date of invitation for bids or request for proposal, form a part of this specification to the extent specified herein:

SPECIFICATIONS

Federal	
TT-S-735	Standard Test Fluids; Hydrocarbon
Military	
MIL-B-197	Bearings, Anti-Friction, Associated Parts and Sub-Assemblies, Packaging of
MIL-C-5541	Chemical Conversion Coatings on Aluminum and Aluminum Alloys
MIL-H-5606	Hydraulic Fluid, Petroleum Base, Aircraft, Missile, and Ordnance
MIL-L-7808	Lubricating Oil, Aircraft Turbine Engine, Synthetic Base
MIL-A-8243	Anti-Icing and Deicing-Defrosting Fluid
MIL-B-81820	Bearings, Plain, Self-Lubricating, Self-Aligning, Low Speed

STANDARDS

Military

MIL-STD-100	Engineering Drawing Practices
MIL-STD-105	Sampling Procedures and Tables for Inspection by Attributes
MIL-STD-129	Marking for Shipment and Storage
MIL-B-XXXXX/1	Bearing, FRP Composite, Sleeve, Plain, Self-Lubricating, -65°F to +250°F
MIL-B-XXXXX/2	Bearing, FRP Composite, Sleeve, Flanged, Self-Lubricating, -65°F to +250°F

(Copies of specifications, standards, drawings, and publications required by suppliers in connection with specific procurement functions should be obtained from the procuring activity or as directed by the contracting officer.)

2.2 Other publications--The following documents form a part of this specification to the extent specified herein. Unless otherwise indicated, the issue in effect on date of invitation for bids or request for proposal shall apply.

American National Standards Institute

ANSI B46.1	Surface Texture, Surface Roughness, Waviness and Lay

(Application for copies should be addressed to the American National Standards Institute, 1430 Broadway, New York, New York 10018.)

Uniform Classification Committee

Uniform Freight Classification Rules

(Application for copies of the above publication should be addressed to the Uniform Classification Committee, 202 Chicago Union Station, Chicago, Ill. 60606.)

3. REQUIREMENTS

3.1 Qualification--Bearings furnished under this specification shall be products that are qualified for listing on the applicable qualified products list at the time set for opening of bids. (See 4.3, 6.3, and 6.3.1)

3.1.1 Product design change--Any change in product design, description, materials, or processing procedures will require requlaification of the product to an extent determined by the qualifying activity.

3.2 Materials--Material for the sleeve and liner shall be in accordance with the applicable military specification sheet. TFE shall be included in the FRP composite or in the liner in such a manner that the bearing will conform to all requirements of this specification, including sizing by line reaming or boring after installation of the bearing in an assembly.

3.3 Geometry--Bearing geometry shall conform to that shown on MIL-B-XXXXX/1 or MIL-B-XXXXX/2.

3.4 Construction--If a bore liner is used, the liner shall be so secured that all relative motion will be between the liner and the shaft. Except as otherwise specified on the applicable military specification sheet, the details of the design shall be optional.

3.4.1 Dimensions and tolerances--Dimensions and tolerances shall be as specified on the applicable military specification sheet. Dimensions not shown shall be at the option of the manufacturers.

3.4.2 Surface texture--The surface texture shall be in accordance with the applicable specification sheet. Bearings shall be free of any surface defects that may be detrimental to satisfactory installation, performance, or bearing life as defined in this specification.

3.4.3 Lubrication--Initial grease or oil lubrication by the manufacturer will not be permitted.

3.4.4 Liner condition and bond integrity--

3.4.4.1 Visual examination--The visual appearance of the exposed surface of the bonded liner shall be uniform in texture and shall contain no imbedded contaminants. The seams where the ends of the liner meet shall be trimmed so as to provide continuity of the liner surface. The liner shall be positioned uniformly within the length of the bearing and shall be free of frayed edges.

3.4.4.2 Bond integrity--When checked in accordance with 4.6.5, the liner shall be tightly adherent to the composite substrate.

3.5 Performance--

3.5.1 Radial static limit load--After the static load listed in table I has been applied as specified in 4.6.1, the permanent set shall not exceed 0.002.

3.5.2 Oscillation under radial load--The total wear of the bearing shall not exceed 0.0035 inch after 1000 cycles, 0.0040 inch after 5000 cycles, and 0.0045 inch after 25,000 cycles when tested at room temperature in accordance with 4.6.2. If a bonded liner is used in the bore, visual examination of the liner after test shall indicate no separation of the liner from the FRP substrate in the loaded area.

TABLE I. Load values

Part No.	Static Load (lb)	Oscillation Load (lb)	After Test Torque (in./lb maximum)
MXXXXX/1-08-012	6,900	6,300	79
MXXXXX/1-16-016	20,000	16,500	410
MXXXXX/1-24-016	30,000	22,500	840

3.5.3 Fluid compatibility--When tested in accordance with 4.6.3, the bearings shall be compatible with the fluids listed in 4.6.3 and the total bearing wear shall not exceed 0.0060 inch. If a bonded liner is used in the bore, visual examination of the liner after test shall indicate no loss of bonding to the FRP substrate in the loaded area.

3.5.4 High temperature--When tested in accordance with 4.6.4, under the dynamic load specified in table I, the total bearing wear shall not exceed 0.0060 inch. If a bonded liner is used in the bore, visual examination of the liner after test shall indicate no loss of bonding to the FRP substrate in the loaded area.

3.6 Interchangeability--All parts having the same manufacturer's part number shall be directly and completely interchangeable with each other and with respect to installation and performance. The drawing number requirements of MIL-STD-100 shall govern documentation of and changes in the manufacturer's part numbers.

3.7 Identification of product--Each bearing shall be permanently and legibly marked with the manufacturer's identification. Where space permits, other information as specified on the military specification sheet shall be marked on the bearing. Metal impression stamping is prohibited.

3.8 Workmanship--The bearings shall be free of toolmarks, chatter waves, grinding scratches, and other defects that may adversely affect the serviceability of the bearing.

4. QUALITY ASSURANCE PROVISIONS

4.1 Responsibility for inspection--Unless otherwise specified in the contract or purchase order, the supplier is responsible for the performance of all inspection requirements as specified herein. Except as otherwise specified, the supplier may utilize his own facilities or any other commercial laboratory acceptable to the Government. The Government reserves the right to perform any of the inspections set forth in the specification where such inspections are deemed necessary to assure supplies and services conform to prescribed requirements.

4.1.1 Qualification test records--The manufacturer shall maintain a record showing quantitative results for all tests required by this specification. This record shall be available to the purchaser and shall be signed by an authorized representative of the manufacturer or the testing laboratory, as applicable.

4.2 Classification of tests--The inspection and testing of the bearings shall be classified as:

(a) Qualification tests (4.3)
(b) Quality conformance tests (4.4)

4.3 Qualification tests--

4.3.1 Sampling instructions--Qualification test samples shall consist of 35 bearings conforming to M81934/1-08A012 plus 15 bearings of each of the additional bore diameters, widths, and housing materials specified below for which qualification is desired. All bearings necessary for tests specified herein shall be furnished by the manufacturer. Samples shall be identified as required and forwarded to the activity designated in the letter of authorization (see 6.3 and 6.3.1).

When approved: /1-08 012 will qualify /1&/2-04 through -09
/1-16 016 will qualify /1&/2-10 through -18
/1-24 016 will qualify /1&/2-20 through -32

4.3.2 Certified test report--The manufacturer shall furnish a certified test report showing that the manufacturer's product satisfactorily conforms to this specification (see 6.3.1). The test report shall include, as a minimum, actual results of the tests specified herein. When the report is submitted, it shall be accompanied by a dated drawing that completely describes the manufacturer's product by specifying all dimensions and tolerances and materials. The manufacturer's part number for each size shall be included on the drawing.

4.3.3 Tests--Qualification tests shall include all the examinations and tests of this specification. The minimum number of samples per test shall be in accordance with table II.

4.3.4 Qualification retention--The retention of qualification shall consist of periodic verification and shall be by certification unless otherwise specified by the activity responsible for the Qualified Products List and shall be at intervals of not more than two years.

4.4 Quality conformance tests--The quality conformance tests of the bearings shall consist of the examinations and tests of table III to determine conformance of the bearings to the requirements of this specification.

Unless otherwise specified by the purchaser, inspections shall be conducted in accordance with MIL-STD-105, Table III-A. In addition, when so required by the purchase order, supplemental tests shall be performed to determine conformance to the requirements of this specification not covered in table III.

4.4.1 Inspection lot--The inspection lot shall consist of finished bearings, having a single part number, manufactured according to the same procedures as the parts originally qualified and produced as one continuous run or order or portion thereof.

TABLE II. Qualification test samples

Examination and tests	Paragraph number	Samples to be tested
Examination of product	4.5.1	5
Preparation for delivery	4.5.2	5
Radial static limit load	4.6.1	3
Oscillation under radial load	4.6.2	3
Fluid compatibility	4.6.3	15 (MXXXXX/1-08-012 only)
High temperature	4.6.5	3
Bond integrity	4.6.5	1

TABLE III. Quality conformance tests

Examinations and tests		Paragraph numbers		AQL
(a)	Dimensions	(3.4.1)	(4.5.1)	4.0
(b)	Identification of product	(3.7)	(4.5.1)	1.0
(c)	Workmanship	(3.4.4.1)(3.8)	(4.5.1)	1.0
(d)	Preparation for delivery		(4.5.2)	1.0
(e)	Liner condition and bond integrity	(3.4.4.1)(3.4.4.2)	(4.6.5)	10.0

4.4.2 Sampling--

4.4.2.1 Sample for quality conformance tests (a) through (d)--The sample bearings shall be selected from each inspection lot in accordance with MIL-STD-105, inspection level II.

4.4.2.2 Sample for quality conformance test (e)--The sample bearing shall be selected from each inspection lot in accordance with MIL-STD-105, inspection level S-2.

4.4.3 Quality assurance certification--For each inspection lot, the manufacturer shall maintain and supply to the purchaser upon demand:

(a) Certified copies of all records of quality conformance tests specified in 4.4 and the purchase order.

(b) Certification that the materials, manufacturing procedures, and processes used in producing the bearings are the same as those of the bearings originally qualified.

These records and certifications shall identify the manufacturer of the bearings, the address of the plant where they were manufactured, the purchaser, and the purchase order number.

In addition, when the purchaser is an agency of the United States Government, and the lot size exceeds 100 parts, the manufacturer shall supply to the qualifying activity:

(c) Copies of the above records and certifications.

(d) A sample of untested bearings selected from each inspection lot in accordance with MIL-STD-105, inspection level S-2, AQL 15.

4.4.4 Resubmitted inspection lots--The paragraph titled "Resubmitted lots or batches" of MIL-STD-105 shall apply. A resubmitted inspection lot shall be inspected using tightened inspection. Where the original acceptance number was zero, a sample size represented by the next higher sample size code letter shall be selcted. When an inspection lot is resubmitted, full particulars concerning the cause of previous rejection and the action taken to correct the defects found in the inspection lot, shall be furnished by the contractor to the procuring activity.

4.5 Examinations--

4.5.1 Examination of product--The bearings shall be examined to determine conformance to the requirements of this specification and the applicable MS for material, dimensions, finish, identification of product, workmanship, and requirements not covered by tests.

4.5.2 Preparation for delivery--Preservation, packaging, packing, and marking shall be inspected to determine conformance to section 5.

4.6 Test methods--Unless otherwise specified, all tests shall be conducted at room temperature.

4.6.1 Radial static limit load--The bearings shall be installed in a test fixture as shown on Figure 1, using a 0.0001 to 0.0016 interference fit with the housing and a 0.002 to 0.004-inch loose fit with the pin. A preload of 4 to 6 percent of the radial static load shall be applied to the bearing for 3 minutes, and the measuring device set at zero. The load shall then be increased at the rate of 1 percent of the specified load per second until it equals the radial static limit load. The load shall then be reduced at the same rate to the preload value. The permanent set shall be the reading at preload.

4.6.2 Oscillation under radial load--The bearing shall be installed in a steel housing, using a 0.0001 to 0.0016 interference fit with the housing and a 0.000 to 0.001-inch loose fit with the pin. The bearing shall be so installed as to place the pin in double shear. A dial indicator or electronic pickup shall be so mounted that any radial movement of the pin or the bore of the bearing with respect to the bearing outside diameter can be measured. The oscillation load specified in Table I shall be applied and held statically for 15 minutes. At the end of this time, the indicating device shall be set at zero and the oscillating test shall be started. Wear readings shall include the wear from the first cycle on. The tst shall be run in such a manner that the pin is oscillated ± 25 degrees (50 degrees total) at 10 cycles per minute for 25,000 cycles. One cycle shall consist of rotation from zero degrees to +25 degrees, return through zero degrees to -25 degrees, and return to zero degrees. Sufficient readings during the test shall be recorded to plot a graph of wear (thousandths of an inch) versus life (cycles). Upon completion of the test, the loaded breakaway torque shall be as specified in Table I and liner wear and liner bond shall be as specified in 3.5.2.

4.6.3 Fluid compatibility--Fifteen bearings conforming to MXXXXX/1-08-012 (3 for each fluid) shall be immersed for 24 hours in each of the following fluids at 160° ± 5°F, except for (b) which shall be at 110° ± 5°F:

(a) Skydrol 500B hydraulic fluid
(b) TT-S-735, type VII standard test fluid
(c) MIL-L-7808 lubricating oil
(d) MIL-H-5606 hydraulic oil
(e) MIL-A-8243 anti-icing fluid

Within 1/2 hour after removal from the test fluid, the bearing shall be tested in accordance with 3.5.3 and 4.6.2.

4.6.4 High temperature--Three bearings conforming to MXXXXX/1-08-012 shall be subjected to the test of 4.6.2, except that the bearings shall be heated in such a way that the pin/liner interface is maintained at a temperature of 250° ± 5°F. The load shall be 75 percent of the oscillation load as specified in Table I.

4.6.5 Bond integrity--The liner shall be so secured to the substrate as to completely resist removal with a blade or scribe without destroying the liner, the substrate, or both.

5. PREPARATION FOR DELIVERY

5.1 Preservation, packaging, packing, and marking--Preservation, packaging, packing, and marking shall be in accordance with MIL-B-197. Unit packages shall contain one unit per package.

5.2 Marking for shipment and storage--The shipment marking nomenclature shall be in accordance with MIL-STD-129 and include the following:

> Bearings, FRP Composite, Sleeve *(Plain or Flanged), Self-Lubricating

6. NOTES

6.1 Intended use--These bearings are intended primarily for use in airframe applications of high loads at low rotational oscillatory speeds. For specific design information on the capability of these bearings under particular load, speed, and wear/life conditions, the user is referred to the Airframe Design Guide. (AFSC DH2-1).

6.2 Ordering data--Procurement documents should specify:

(a) Title, number, and date of this specification

(b) Military identifying part number

(c) Applicable levels of preservation, packaging, and packing (see 5.1 and 5.2)

(d) Quality assurance certification (see 4.4.3)

---

*Applicable data to be entered by contractor.

6.3 Qualification--With respect to products requiring qualification, awards will be made only for such products as have, prior to the time set for opening of bids, been tested and approved for inclusion in the applicable Qualified Products List, whether or not such products have actually been so listed by that date. The attention of the suppliers is called to this requirement, and manufacturers are urged to arrange to have the products that they propose to offer to the Federal Government tested for qualification in order that they may be eligible to be warded contracts or orders for the products covered by this specification. The activity responsible for the Qualified Products List is the Naval Air Systems Command, Navy Department, Washington, D.C. 20360; however, information pertaining to qualification of products may be obtained from the Naval Air Development Center, Warminster, Pennsylvania 18974, Attention: Code 30211 (Telephone (215) 672-9000, ext. 2834, Autovon 441-2834).

6.3.1 Authorization for submittal of samples--A manufacturer seeking qualification approval of his product will be authorized to submit samples for such approval only upon presentation of certified test reports and drawings indicating that his product conforms to this specification.

6.4 Definitions--Processing procedures--All bonding, curing, and post-curing procedures (see 3.1.1).

☆U.S.Government Printing Office: 1979 — 657-002/528