AD-A078 741 OREGON STATE UNIV CORVALLIS SCHOOL OF OCEANOGRAPHY F/G 8/10
EXPOSURE. A NEWSLETTER FOR OCEAN TECHNOLOGISTS. VOLUME 7, NUMBE--ETC(U)
SEP 79 R MESECAR

UNCLASSIFIED NL

| OF |

AD
A078741

END
DATE
FILMED
1-80
DDC

ADA078741
DDC FILE COPY

EXPOSURE

vol.7 no.4 a newsletter for ocean technologists

Volume 7 Number 4

DDC
RECEIVED
OCT 31 1979
A

Serial ASCII Instrumentation Loop

Rod Mesecar

Introduction

Standard design criteria generally do not exist in the marine research community. Simply stated, standards are the root words to a language for technical information transfer. Until standards can be developed, disseminated, and accepted throughout the community, common and frustrating difficulties will remain formidable and impede cooperative research efforts.

The marine community endorsement for the need of standardization was expressed at a recent workshop held to identify basic minimum scientific support capabilities for research vessels (1). The need for a standard method of digital data transfer on research vessels was one of the recommendations.

SAIL is the acronym for a proposed standard for the marine community, entitled "Serial ASCII Instrumentation Loop". This standard has other applications, but it has been proposed as one candidate specifically for intravessel digital data communications from sensors that monitor vessel parameters (position, speed, heading, etc.).

The prime benefit of an implemented data communications standard is to enable scientific parties to have ready access to vessel parameters which complement the data from the research program. Such a data access technique is contained in the SAIL standard, and pertinent features of the standard are briefly described here.

Sept~~ember 19~~79

DISTRIBUTION STATEMENT A
Approved for public release;
Distribution Unlimited

272 268

The Standard

The SAIL standard merges the bit serial communications standard in the current-loop mode, with its inherent noise immunity, and the ASCII standard which defines the character format and provides a reasonable linkage to high-level computer languages. Also the instrumentation system incorporating this standard is partitioned where the loop controller and each data station (sensor) can be physically remote from each other, as schematically illustrated in Figure 1. Each data station is assigned a two-digit address and is required to respond when addressed on the loop, which makes each data station unique and independent of the remainder of the system. This independence allows incremental growth of the system and graceful degradation should a single element fail. Individual data stations can then be moved in and out of the system for calibration, servicing, and applications elsewhere without interfering with the system's operation as a whole. Goals of the standard, as incorporated in an instrumentation system, are summarized below:

SHIP BASED REQUIREMENTS

- Ease of installation
- Freedom from interference
- Easily understood by ET's
- Flexibility for nonstandard sensors
- Graceful degradation
- Simple cabling
- Calibration off ship

SCIENCE BASED REQUIREMENTS

- Accessible to computers
- Unambiguous meaning
- Nonspecific processor or language
- Universal hardware interface
- High-level-language compatible
- Calibration control data
- System fallback

Operation

The concept of the SAIL standard, and its incorporation into an instrumen-

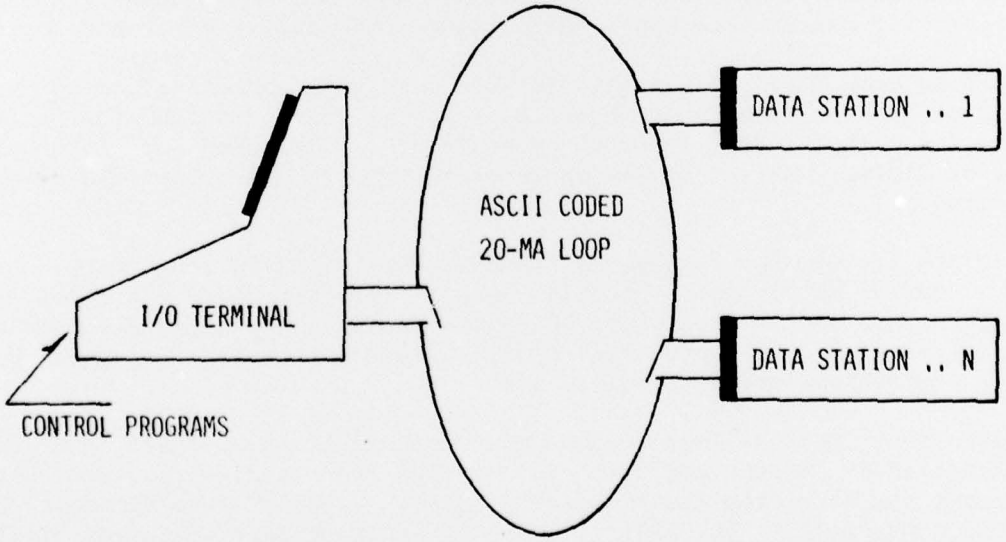

Figure 1

tation system, has been evolving since 1972 [2,3,4,5]. Recent meetings with equipment and instrumentation-system developers at sister institutions have duly critiqued the SAIL concept and broadened its application potential. Again, as shown in Figure 1, the basic system is composed of a loop controller and one or more data stations. The expanded capabilities of SAIL, as now envisioned, include several new operating modes for the controller and higher speed operation.

The controller operating modes now envisioned are:

System Mode	User Access Mode
• Dedicated User	• Pole/Response
• Central Controller	• Continuous Scan/ User Listen
• Central Controller	• Pole/Response over independent user channels

The data stations have two data transfer rate modes:

- Slow speed (110 or 300 baud) for simple terminal use (e.g., a TTY and one data station).
- Higher speed (chosen by user but at standard baud rates). Those data stations capable of operating at the higher baud rate, when requested, will change to that baud rate.

With combinations of these system modes, most scientific needs can be met.

Users Group

The quality and the benefits of a standard are only as good as the interest and dedication of the people participating in them. The community can benefit if individuals will share their design, techniques, and advice with others. For this reason, a SAIL users group has been formed and two people have agreed to act as documentarians, to supply copies of the SAIL standard, and consult on its application. If you are interested in participating in SAIL, please write or telephone:

Frank Evans
Technical Planning & Develop. Group
School of Oceanography
Oregon State University
Corvallis, OR 97331
Telephone: (503) 754-2206, or

Al Bradley
Woods Hole Oceanographic Institution
Woods Hole, MA 02543
Telephone: (617) 548-1400, Ext. 2448

REFERENCES:

(1) "Basic Minimum Scientific Support Capabilities for UNOLS Vessels: Supply, Operation and Maintenance". *Workshop Report, February 26-28, 1979, Texas A&M University.*

(2) Evans and Mesecar, "Common Computer Interface Advantages," *EXPOSURE* III (5).

(3) Mesecar and Vito, "A Partitioned Data Communications System," *EXPOSURE* VI (3).

(4) Mesecar and Evans, "Common Computer Interface Advantages," *PROCEEDINGS, Working Conference on Oceanographic Data Systems, Woods Hole, 1975,* p 257.

(5) Mesecar and Evans, "A Partitioned Data Communications System," *PROCEEDINGS, Second Working Conference on Oceanographic Data Systems, Woods Hole, 1978, p 372.*

Accession For
NTIS GRA&I ☑
DDC TAB ☐
Unannounced ☐
Justification
By
Distribution/
Availability Codes
Dist | Avail and/or special
A

EDITOR

ROTOR SENSOR USING A HALL-EFFECT SWITCH

Introduction

A circuit design incorporating a Hall-effect device has been successfully used as an anemometer rotor-speed sensor. It could also be used in current meters where reed switches and optical sensors have some disadvantages.

Methods

In order to test the circuit design, a cup and propeller style anemometer were used. These anemometers were previously equipped with a magneto (generator) which developed a voltage output proportional to the rotor speed. To function with the Hall-

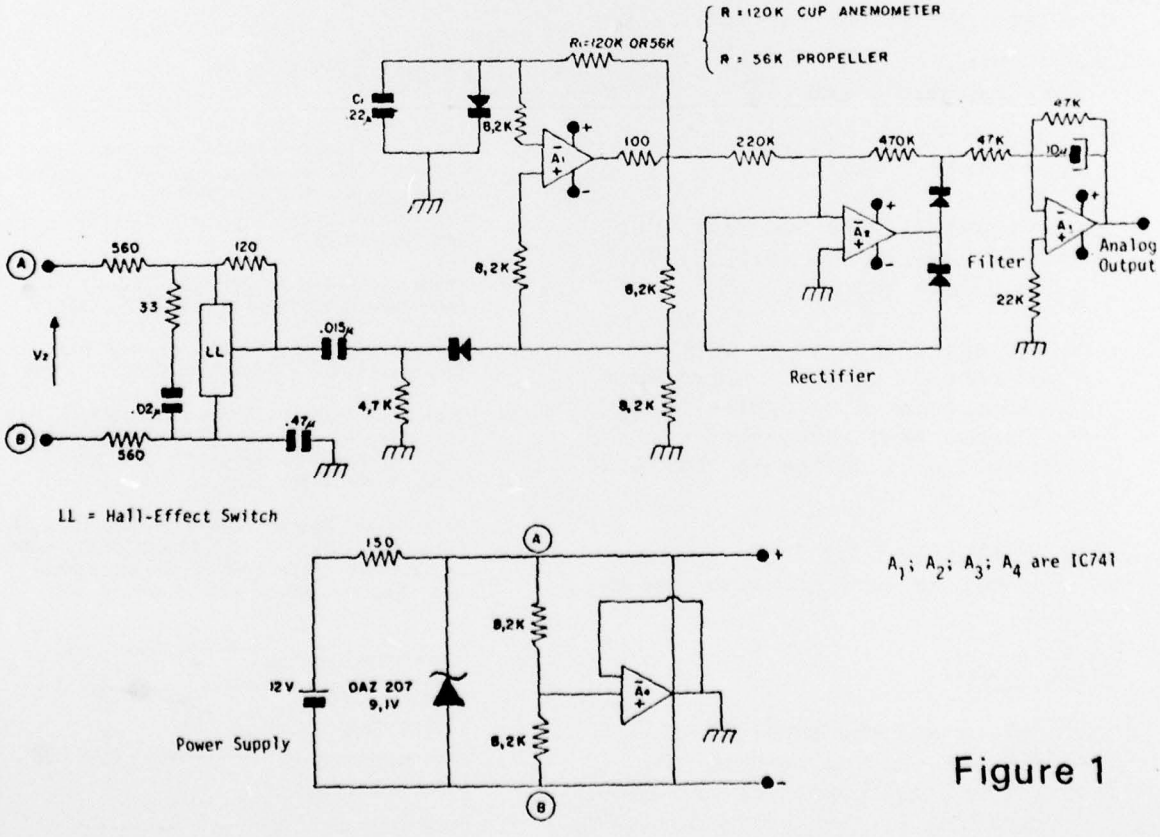

Figure 1

CONVERSATION RECORD	1. DATE 10 Jan 80	2. TIME 1540

3. TYPE OF CONVERSATION

☐ TELEPHONE (Incoming) ☒ TELEPHONE (Outgoing) ☐ OFFICE VISIT

4. SUBJECT OF CONVERSATION

Verification of Contract

5. CALL/VISIT MADE BY (Name of person)	5a. OFFICE/FIRM/COMPANY, ETC.	5b. PHONE NO. AND/OR EXT.
Joanne Beitzell	DTIC/TID	274-6805
6. CALL/VISIT MADE TO (Name of person)	**6a. OFFICE/FIRM/COMPANY, ETC.**	**6b. PHONE NO. AND/OR EXT.**
Dr. Rod Mesecar	Oregon State Univ. School of Oceanography	503 754-2206

7. SUMMARY OF CONVERSATION, AND IF APPLICABLE, STATEMENT AS TO SUBSEQUENT ACTION TAKEN OR TO BE TAKEN

Doc. Title - EXPOSURE, A Newsletter for Ocean Technologists, Volume 7, Number 4.

These documents are no longer done under Navy Contracts.

(IF ADDITIONAL SPACE IS NEEDED, CONTINUE ON REVERSE SIDE)

8. PRINTED NAME AND TITLE OF PERSON MAKING/RECEIVING CALL/VISIT	8a. SIGNATURE
Joanne Beitzell	Joanne Beitzell

DLA FORM NOV 73 1349

REPLACES ALL SIMILAR PURPOSE FORMS USED IN DLA, WHICH MAY BE USED UNTIL EXHAUSTED

effect device, the magneto was replaced with a disc containing four radial magnets.

A silicon Hall-effect device, Type TL 170 manufactured by Texas Instruments, was chosen as the rotor sensing element. As the rotor turns, magnets actuate the sensor, thus generating pulses which were then counted for a ten-second period. A 10 m/sec wind speed step was used to measure the time constant (τ) of the system. To obtain an analog output from the rotor sensor, a frequency to voltage (F/V) converter was incorporated. The circuit used to provide the rotor pulsed and analog voltage speed outputs is shown in Figure 1. Although there are more advanced integrated circuits available, 741 operational amplifiers were used because of their availability.

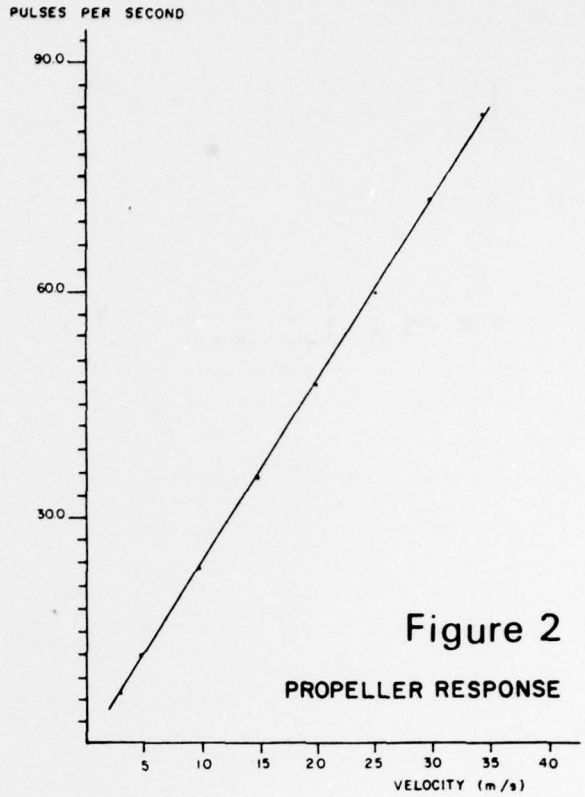

Figure 2

PROPELLER RESPONSE

Results

The response of the two rotor types is shown in Figure 2 and Figure 3. Figure 4 shows the response of the F/V tested with the propeller. The upper limit in the test velocity was imposed by the wind-tunnel characteristics.

The τ for both rotor types is:

Cup anemometer	τ (wind increasing) = 0.5 sec τ (wind decreasing) = 4.5 sec
Propeller	τ (wind increasing) = 2.5 sec (wind decreasing) = 4.5 sec

At the higher wind speeds, the cup anemometer showed a peculiar behavior. There were more pulses per second than expected for a linear response. It was found that the abnormal behavior was produced by the unsteady flow in

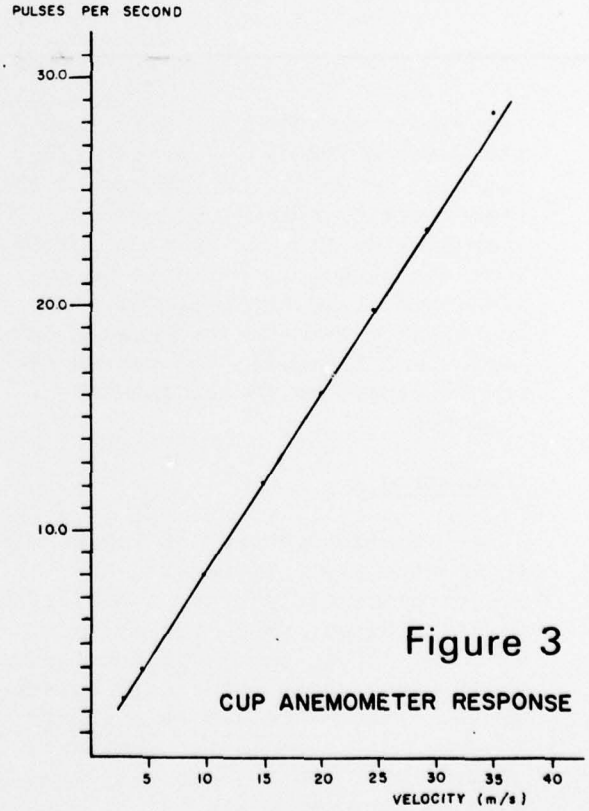

Figure 3

CUP ANEMOMETER RESPONSE

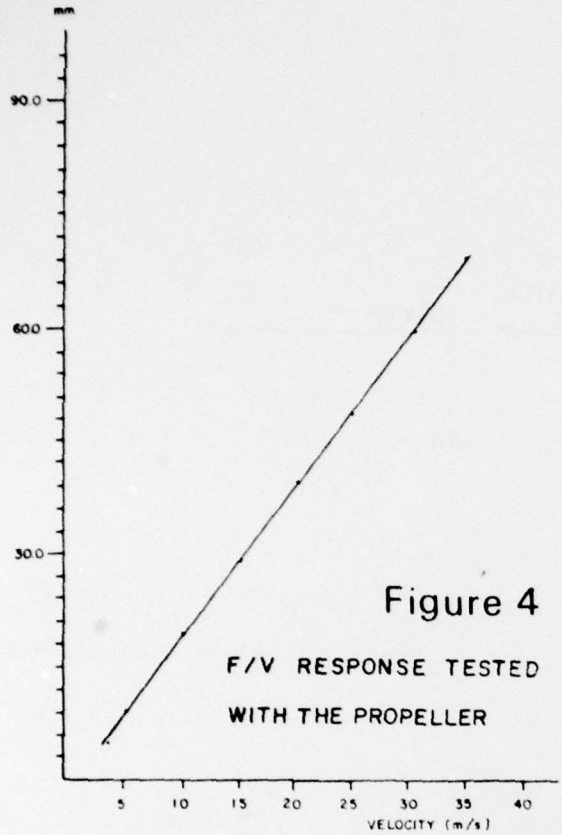

Figure 4

F/V RESPONSE TESTED WITH THE PROPELLER

the wind-tunnel and the difference of the drag coefficients between front and rear faces of the cup caused the anemometer to reflect a faster response for increasing wind speeds. This phenomenon is found in gusty winds and it is known as "over-speeding". Time ratios between count period and τ explain the causes of the overspeeding in cup anemometer response.

Conclusion

It is straightforward and inexpensive to improve old anemometer characteristics by using a Hall-effect sensor. Linear responses obtained with this style sensor reduce the calibrating time. The rotor sensor worked without problem at our wind speeds, and it could be considered in slower rotor sensors such as those used in current meters.

FOR FURTHER INFORMATION, CONTACT:

Dardo O. Guaraglia
S.H.N.
Departamento de Oceanografia
Avenida Montes de Oca 2124
Buenos Aires, ARGENTINA

Dardo O. Guaraglia received his electronics engineering degree from the University of La Plata in 1975. Since graduation he has been working at the Naval Hydrographic Service in Argentina. He is working on current meters, wavemeters, and tide meters.

Daniel Valladares, a junior technician, has worked in the Naval Hydrographic Service of the Argentinian Navy since 1978. Currently, he is collaborating on current meter development.

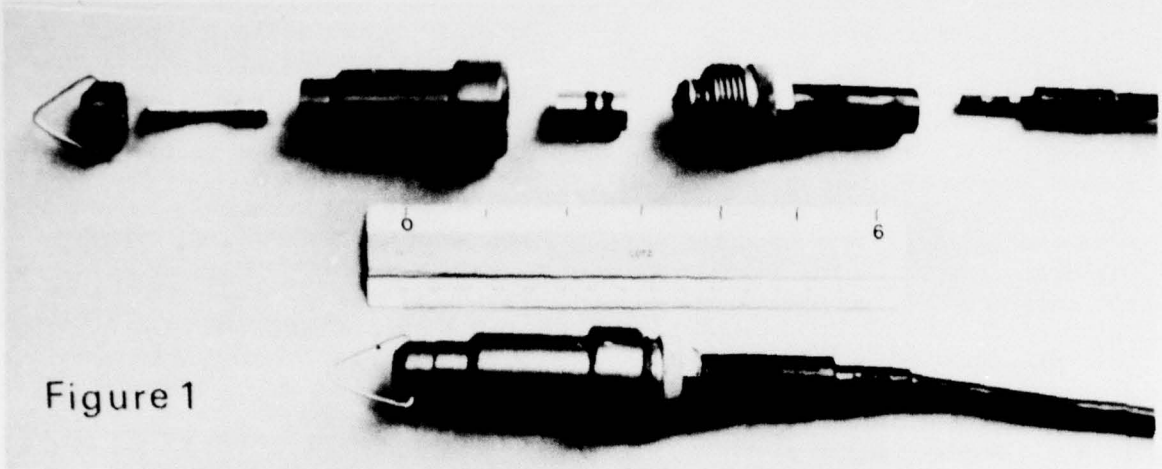

Figure 1

A Combination Pressure Ballast Release And Power Switch

A free-descending velocity profiler was recently developed at the National Oceanic and Atmospheric Administration's (NOAA) Seattle-based Pacific Marine Environmental Laboratory. As with many free-descending packages, the accumulation of data occurs only during the profiler descent. However, power consumption occurs during the package ascent and also during residence time at the surface while the package is awaiting recovery. This results in either frequent changes of the battery power supply or in using larger battery packs. Accordingly, of particular interest in the PMEL development was the fabrication of a pressure release to free the lead shot ballast and simultaneously interrupt power to the sensor package, thereby significantly extending the life of the costly lithium battery packs used as a power source.

The pressure release consists of the following components as pictured in Figure 1: (1) ballast release end cap; (2) break section; (3) release body; (4) piston; (5) switch end cap; and (6) connector. The release cable cap (1) and piston (4) are tapped to accept the threaded break section. A small hole is drilled in the necked region of the release body (3) to permit sea water access to the piston face. The force on the piston resulting from the differential between atmospheric and ambient sea water pressures causes the break section to fail. Excellent repeatability was noted for failure depth during pressure tests.

When the break section parts, the ballast release end cap separates and permits the ballast to fall. The piston is then driven by hydrostatic pressure into the switch end cap and becomes the contact section between two brass foil strips which are cemented to a thin neoprene disc and soldered to the bulkhead connector wires. An interface circuit between the sensor electronics

and power supply recognizes the closing of the switch and interrupts the power to the sensor electronics. The power remains interrupted throughout the ascent and recovery period due to a latching feature in the interface circuitry, thus any movement by the piston upon the package's return to the surface will not influence system operation.

This pressure release has been successfully tested to 5000 m and repeatedly operated successfuly to 3200 m. Battery drain is approximately 40 percent less than a similar system without a power interrupt feature, and additional time saving advantages result from not having the requirement to frequently change or recharge the power supply.

FOR FURTHER INFORMATION, CONTACT:

David Gardner
NOAA - PMEL - ESG
Bldg. 32
7600 Sand Point Way, N.E.
Seattle, WA 98115

Telephone: (206) 442-7327

David Gardner is presently a member of the NOAA Commissioned Corps and is assigned to the Engineering Studies Group at NOAA's Pacific Marine Environmental Laboratory. His work includes acting as a focal point for PMEL's acoustic interests and engineering related studies. He holds BSOE and MSOE degrees from Florida Atlantic University.

TABLE OF CONTENTS

Page	Article	Author
1	Serial ASCII Instrumentation Loop (SAIL)	Editorial: Staff
4	Rotor Sensor Using A Hall-Effect Switch	Guaraglia/Valladares
7	A Combination Pressure Ballast Release and Power Switch	Gardner

Dr. Rod Mesecar, Editor
E X P O S U R E
School of Oceanography
Oregon State University
Corvallis, OR 97331

Telephone: (503) 754-2206

FIRST CLASS MAIL