AD-A087 876 FOREIGN TECHNOLOGY DIV WRIGHT-PATTERSON AFB OH F/G 14/2
A NANOSECOND PULSE GENERATOR FOR SPARK CHAMBERS,(U)
DEC 79 A I ALIKHANYAN, A S ALEKSANYAN
UNCLASSIFIED FTD-ID(RS)T-1848-79 NL

END
DATE FILMED
9-80
DTIC

PHOTOGRAPH THIS SHEET

ADA087876

DTIC ACCESSION NUMBER

LEVEL

INVENTORY

FTD-ID(RS)T-1848-79

DOCUMENT IDENTIFICATION

DISTRIBUTION STATEMENT A
Approved for public release;
Distribution Unlimited

DISTRIBUTION STATEMENT

ACCESSION FOR	
NTIS	GRA&I
DTIC	TAB
UNANNOUNCED	
JUSTIFICATION	
BY	
DISTRIBUTION /	
AVAILABILITY CODES	
DIST	AVAIL AND/OR SPECIAL
A	

DISTRIBUTION STAMP

DTIC
ELECTE
S AUG 15 1980 D
D

DATE ACCESSIONED

80 6 2 239

DATE RECEIVED IN DTIC

PHOTOGRAPH THIS SHEET AND RETURN TO DTIC-DDA-2

DOCUMENT PROCESSING SHEET

DTIC FORM OCT 79 70A

AD A087876

FTD-ID(RS)T-1848-79

FOREIGN TECHNOLOGY DIVISION

A NANOSECOND PULSE GENERATOR FOR SPARK CHAMBERS

by

A. I. Alikhanyan, A. S. Aleksanyan, et al.

Approved for public release;
distribution unlimited.

EDITED TRANSLATION

FTD-ID(RS)T-1848-79 4 December 1979

MICROFICHE NR: FTD-79-C-001563

CSH69694402

A NANOSECOND PULSE GENERATOR FOR SPARK CHAMBERS

By: A. I. Alikhanyan, A. S. Aleksanyan, et al.

English pages: 12

Source: Izvestiya Akademii Nauk Armyanskoy SSR, Fizika, Nr. 3, 1968, pp. 303-313

Country of Origin: USSR
Translated by: John Hanus
Requester: FTD/TQTD
Approved for public release; distribution unlimited.

THIS TRANSLATION IS A RENDITION OF THE ORIGINAL FOREIGN TEXT WITHOUT ANY ANALYTICAL OR EDITORIAL COMMENT. STATEMENTS OR THEORIES ADVOCATED OR IMPLIED ARE THOSE OF THE SOURCE AND DO NOT NECESSARILY REFLECT THE POSITION OR OPINION OF THE FOREIGN TECHNOLOGY DIVISION.

PREPARED BY:

TRANSLATION DIVISION
FOREIGN TECHNOLOGY DIVISION
WP-AFB, OHIO.

U. S. BOARD ON GEOGRAPHIC NAMES TRANSLITERATION SYSTEM

Block	Italic	Transliteration	Block	Italic	Transliterati
А а	*А а*	A, a	Р р	*Р р*	R, r
Б б	*Б б*	B, b	С с	*С с*	S, s
В в	*В в*	V, v	Т т	*Т т*	T, t
Г г	*Г г*	G, g	У у	*У у*	U, u
Д д	*Д д*	D, d	Ф ф	*Ф ф*	F, f
Е е	*Е е*	Ye, ye; E, e*	Х х	*Х х*	Kh, kh
Ж ж	*Ж ж*	Zh, zh	Ц ц	*Ц ц*	Ts, ts
З з	*З з*	Z, z	Ч ч	*Ч ч*	Ch, ch
И и	*И и*	I, i	Ш ш	*Ш ш*	Sh, sh
Й й	*Й й*	Y, y	Щ щ	*Щ щ*	Shch, shch
К к	*К к*	K, k	Ъ ъ	*Ъ ъ*	"
Л л	*Л л*	L, l	Ы ы	*Ы ы*	Y, y
М м	*М м*	M, m	Ь ь	*Ь ь*	'
Н н	*Н н*	N, n	Э э	*Э э*	E, e
О о	*О о*	O, o	Ю ю	*Ю ю*	Yu, yu
П п	*П п*	P, p	Я я	*Я я*	Ya, ya

*ye initially, after vowels, and after ъ, ь; e elsewhere.
When written as ё in Russian, transliterate as yё or ё.

RUSSIAN AND ENGLISH TRIGONOMETRIC FUNCTIONS

Russian	English	Russian	English	Russian	Engli
sin	sin	sh	sinh	arc sh	sinh^{-1}
cos	cos	ch	cosh	arc ch	cosh^{-1}
tg	tan	th	tanh	arc th	tanh^{-1}
ctg	cot	cth	coth	arc cth	coth^{-1}
sec	sec	sch	sech	arc sch	sech^{-1}
cosec	csc	csch	csch	arc csch	csch^{-1}

Russian	English
rot	curl
lg	log

A NANOSECOND PULSE GENERATOR FOR SPARK CHAMBERS

A. I. ALIKHANYAN, A. S. ALEKSANYAN, G. A. VOROB'YEV, R. L. KABALOV, V. K. KROL', N. S. RUDENKO, V. I. TSVETKOV

In recent years spark chambers have found wide application in research on the interactions of elementary particles. Interest grew especially after experiments with a two-electrode spark chamber in a magnetic field [1, 2, 3], and also after research on the spark chamber in the streamer mode [4, 5, 6, 7].

For further elucidation of spark-chamber characteristics it has become necessary to make high-voltage generators which can produce pulses with nanosecond fronts and amplitudes of several hundred kilovolts.

This study describes a generator of pulses with voltage of up to 600 kV and a leading edge of ~2 nsec. The generator consists of an Arkad'yev-Marx generator (impulse voltage generator – GIN), a storage capacitor and discharge chamber (nanosecond pulse voltage generator – NGIN), and a transmission line to a strip line.

Fig. 1 is the circuit diagram of the generator.

The replacement diagram of the generator is given in fig. 2.

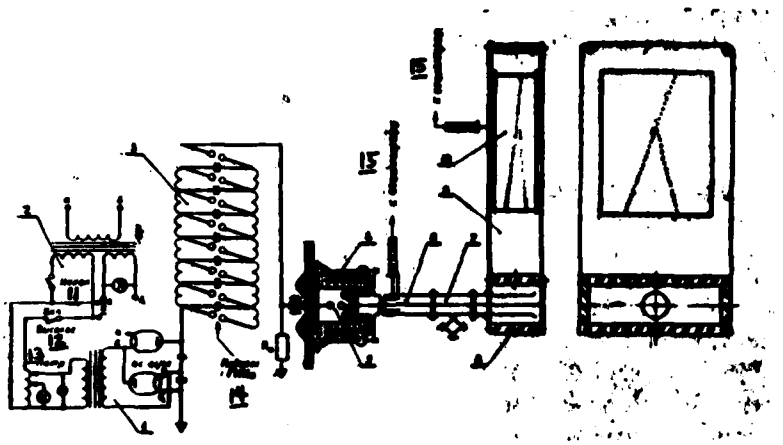

Fig. 1. Generator circuit diagram. 1 - NOM-10 transformer; 2 - filament transformer; 3 - Arkad'yev-Marx generator; 4 - storage capacitor; 5 - discharge chamber; 6 - transmission line; 7 - clipping discharger; 8 - matched crossover from coaxial to strip line; 9 - strip line; 10 - spark chamber; 11 - filament; 12 - high; 13 - tube; 14 - GIN trigger; 15 - to oscillograph.

The circuit *abcd* has minimal inductance, since all of the elements in it are coaxial. On operation of the discharger the capacitance Cg will be discharged to circuit *abcd*, releasing a pulse with a steep front on a load with resistance ρ. Since the inductance of circuit *madn* is many times greater than the inductance of the discharge circuit *abcd*, the primary current will initially be given to the load by Cg, not by the surge capacitance of the Arkad'yev-Marx generator. The capacitance of the nanosecond generator is charged from the pulse produced by the Arkad'yev-Marx generator. Because of the pulse charge of the storage capacitor, the dielectric in it can be a liquid with a high dielectric constant and comparatively high electrical conductivity.

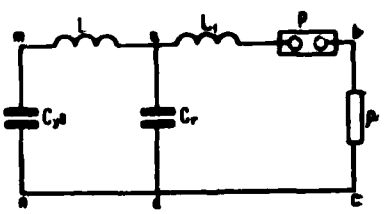

Fig. 2. Replacement diagram of generator

Each step of the Arkad'yev-Marx generator is charged from a rectifying device to the necessary voltage. When a trigatron fires, the generator operates and charges capacitance Cg, on which the voltage is increased 1.7 times over the output voltage of the GIN as a result of the fluctuating nature of the charging process. On operation of the switching discharger of the nanosecond generator a voltage pulse with a $2 \cdot 10^{-9}$ sec front travels through the transmission line to the strip line, at whose open end its amplitude is doubled. An analogous generator is described in [8].

Following is a more detailed description of the generator's principal units.

Arkad'yev-Marx Generator

The Arkad'yev-Marx generator (GIN) consists of 7 steps and is assembled on KBG-P-30-0.1 capacitors. The total generator voltage is 210 kV, the surge capacitance 12500 pf. In order to raise the GIN operating frequency and lower effective losses, the capacitors are charged across inductances.

The full-wave rectifier consists of a high-voltage NOM-10 transformer and BI-0.1-40 kenotrons. The sphere gaps are located on two polyvinyl chloride plastic racks, which also hold the charging inductances. One of the racks can be turned, making it possible to vary the distance between the electrodes of the GIN gaps. To ensure their stable operation at the maximum separation of the electrodes, the diameter of the spheres is 20 mm. The dischargers mutually intensify each other. The discharge resistance is 1.5 kΩ (weak NaCl solution). With a high discharge resistance the pulse duration of the GIN becomes large, and the liquid in capacitor Cg breaks down.

The Arkad'yev-Marx generator is triggered by TGI 1-150 10 trigatron tube.

Nanosecond Generator Storage Capacitor and Discharge Chamber

To produce ~2 nsec fronts the storage capacitor Cg and discharge circuit, which represent a nanosecond generator (NGIN), must have low characteristic inductance.

For reasons of design, and also to reduce stray capacitances and inductances, the discharge chamber is coaxially located inside the storage capacitor Cg.

Capacitor Cg is made of two coaxial cylindrical plates. The interval between the plates is 2.5 cm and filled with glycerine (ε = = 39.1). With an inner-plate diameter of 15 cm and length of 13 cm the capacitance is ~1000 pF.

The length of the capacitor is critical and must be less than the doubled pulse-front duration, because otherwise with short reflection fronts occurring in capacitance Cg the pulse peak would be distorted.

The commutating spark gap across which the storage capacitor discharges to the line operates in a nitrogen atmosphere.

The pressure in the discharge chamber has been determined experimentally. The minimum leading-edge duration is obtained at ~11 atm. However, 16 atm was adopted as the final pressure to prevent sparkover across the surface of the insulator in the discharge chamber at maximum generator voltage.

Thanks to the presence of seals, the distance between discharge electrodes can be regulated without loss of pressure in the discharge chamber.

The duration of the pulse front does not vary with a change in the distance between electrodes, since there is a proportional change in the discharger activation voltage. This regulates the amplitude of the generated pulse.

In fig. 3 are oscillograms showing the charging of the storage capacitance from the GIN. Shown on the oscillogram is a pulse at the output of the charging GIN with and without the storage capacitance connected (a and b, respectively). The amplitude of the first fluctuation is 1.7 times as large as the voltage delivered by the charging GIN.

Transmission Line

The coaxial transmission line is made of a brass tube and rod 80 and 8 mm in diameter, respectively. Transformer oil was used for the dielectric ($\varepsilon = 2.2$). At times of 10^{-8} sec transformer oil has greater dielectric strength [9]. The characteristic impedance of the transmission line is 86 Ω. The four-meter line length was chosen so that a pulse with a maximum duration of 40 nsec on the generator load would not be distorted by reflected pulses from the other end of the line.

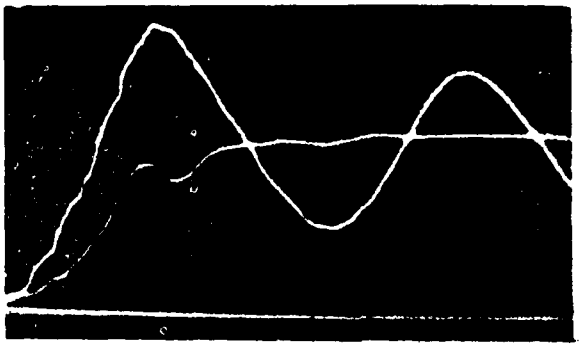

Fig. 3. Oscillogram of storage capacitance charge from GIN with and without connection of storage capacitance (a and b, respectively)

Located at the end of the line in a special outlet is a capacitative voltage divider for oscillographic observation of the pulse form. The divider is made of copper foil 0.5 mm thick, insulated from the outer tube by a thin layer of oiled paper insulation. The time constant of this divider is $\tau = 25$ nsec, 3.6 times smaller than the constant of the generator pulse decay. Therefore, on the oscillograph the pulse will be observed with a steeper decay than is actually the case, but with an undistorted leading edge.

Fig. 4 shows an oscillogram of the voltage produced by the generator with storage capacitance. The period of the graduated fluctuations is 2 nsec.

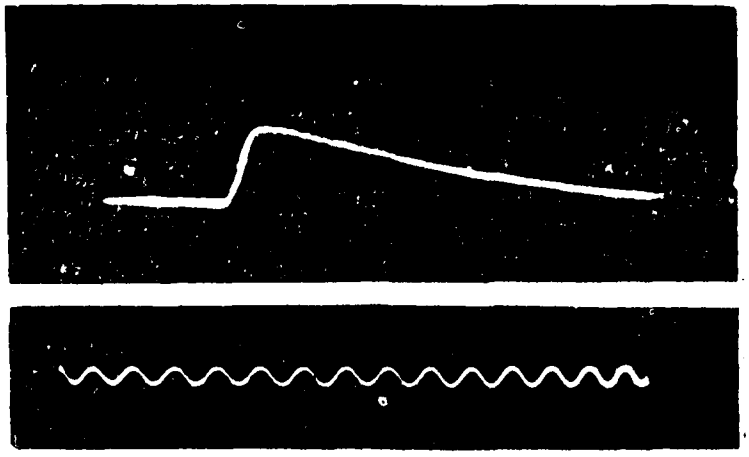

Fig. 4. Oscillogram of voltage pulse produced by generator with storage capacitance

Strip Line and Coaxial – Strip Junction

The spark chamber consists of a glass box 20X40X80 cm, filled with neon to a pressure of 760 mm Hg. The chamber is on a plane-parallel strip line representing two symmetrical duralumin plates. The distance between them and the width were chosen so that the characteristic impedance was 86 Ω.

For undistorted transmission of the pulse form, retaining the leading edge and the amplitude, it is necessary to have a compatible transfer from the coaxial transmission line to the strip line. Several types of compatible transfers are known. One of these is the

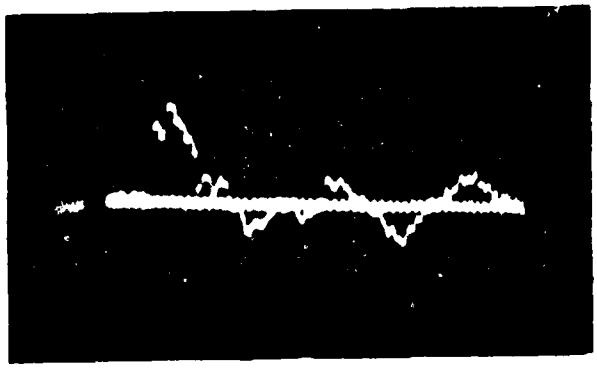

Fig. 5. Oscillogram of voltage pulse with right-angle junction.

right-angle junction (the angle between the strip line and the coaxial line is 90°)(fig. 1). Fig. 5 shows an oscillogram of a voltage pulse with a right-angle junction. Fig. 6(a) shows a smooth transition from a coaxial transmission line to a strip transmission line. It consists of a coaxial conical line segment and a segment representing the smooth development of the conical line into a strip line. θ = 25 cm was specified as the height of the conical line, α = 20 cm was given as the distance between inner and outer cones, and tabulated data [10] were used to determine the angles for the inner and outer cones (θ_1= 6° 41' and θ_2= 29°). Here d_1= 6 cm, and d_2= 35 cm. Fig. 6(b) is an oscillogram of a voltage pulse with a smooth transition. It is seen from fig. 5 and 6(b) that the pulse-form is transmitted satisfactorily by both types of junctions. It should be noted that the right-angle junction is easier to make and uses less space.

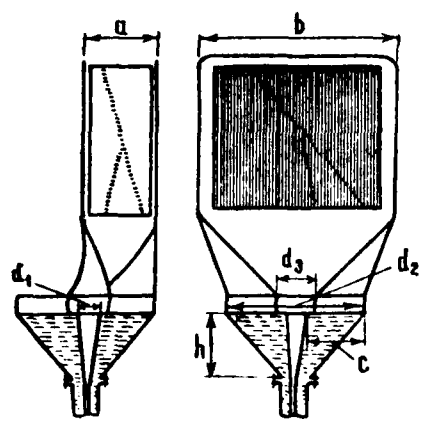

a

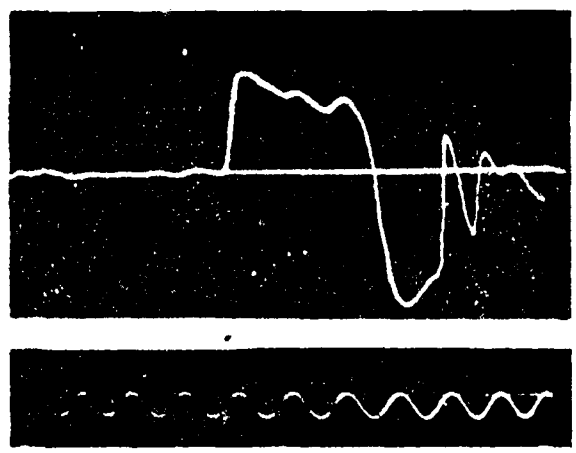

b

Fig. 6. Smooth transition from coaxial transmission line to strip line (a) and oscillogram of voltage pulse (b).

In one electrode of the strip line there is a rectangular wind covered with a metal grid for photographing particles in the spark chamber along an applied electrical field. In the other electrode is a capacitance divider, used along with [illegible] oscillographs to make an oscillogram of a high-voltage pulse.

Devices Regulating High-Voltage Pulse Duration

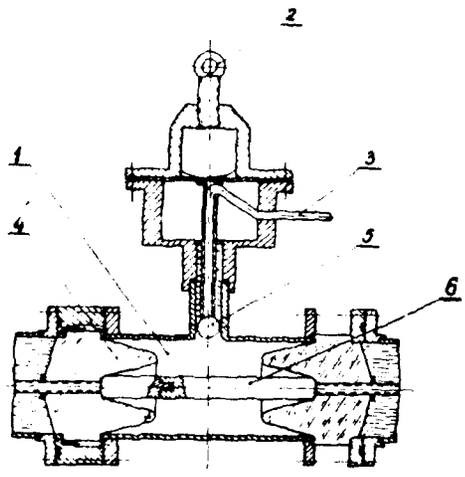

a

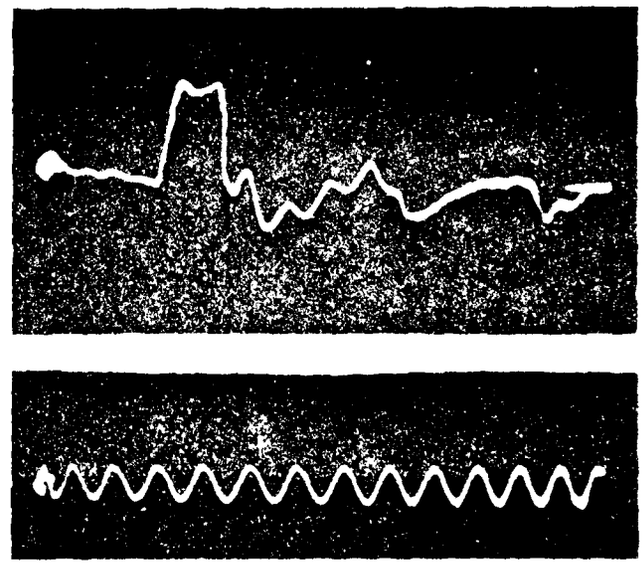

b

movable sphere 5, in the form of a trigatron. Preliminary lighting of the gap with a spark eliminates the statistical time lag in the discharge. The dependence of the stability of the clipped pulse's duration on the clipping time (on overvoltage) was plotted. When pulses of shorter duration are produced, the discharge gap is reduced, and consequently the overvoltage at the gap increases. The variation in discharger operating time is: 10±0; 13±1; 23±4; 35±12 nsec (OK-19M2 oscillograph). In this case the trailing edge of the pulse is 2 nsec (fig. 7(b).

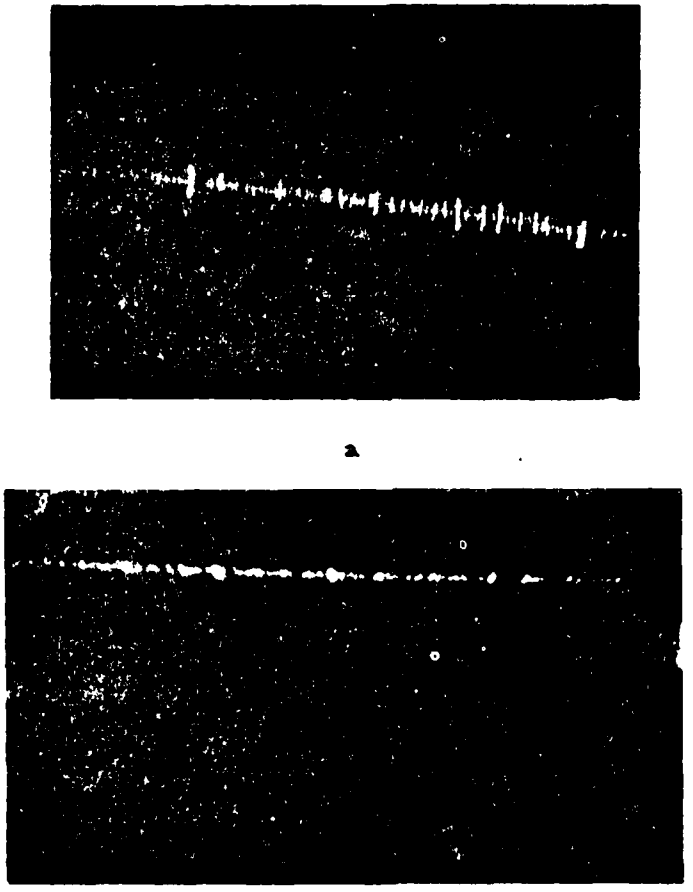

Fig. 8. Photographs of cosmic-ray particles perpendicular to electrical field (a) and parallel (b)

Discussion

This generator has some advantages over previous high-voltage generators in the study of the characteristics of a spark chamber in the streamer mode: the strip line on which the spark chambers are located receives comparatively high power (discharge capacity 1000 pF), and the high-voltage pulse is regulated with good accuracy (with a two-electrode discharger). The generator is triggered by a pulse with a coincidence circuit which registers cosmic-ray particles that have passed through a telescope of counters located above and below the chamber. The track in the chamber was photographed in two projections with 1 : 1.5 (along the field) and [?]15 (perpendicular to the field) lenses on GOST 1300-speed film.

Photographed at the same time were oscillograms of the high-voltage pulse in the infrared, using the OK-19M2.

In one series of experiments a matched impedance was set up at the end of the strip line. The field intensity in the spark chamber was halved. The studies were for the most part carried out with the end of the strip line open. The following results were obtained:

1. In using different types of clipping devices it was found that the two-electrode pressure-type discharger was the best device with respect to stable duration of the clipped pulse in time and the trailing edge. This discharger has stable operation, and the streamers of particle tracks vary between 2 and 6 mm.

Shunt chamber operation is stable for several hundred particle transits, after which the working gas is degraded, because the major portion of the high-voltage pulse's power is released into it. Afterwards shunt chamber operation is unstable.

2. It should be noted that the streamers of single vertically-moving particles are not equally bright along the length of the track. Brightness gradually diminishes with movement from top to bottom. This is evidently due to the nonhomogeneous electrical field in the infrared as a result of reflections from the open end of the strip line. This effect is not observed in the passage of several particles.

In comparing the brightness of streamers from single particles

and showers we concluded that in the second case the streamers are brighter (~2 times).

This phenomenon is most likely explained in this way: when several particles pass through the spark chamber at the same time, the following occurs:

a) the high-voltage pulse delivered to the strip line is supplemented, and the field is equalized throughout the chamber,

b) the particles brighten each other to some extent, which affects the brightness of the tracks.

3. Streamer brightness is not sufficient in existing spark chambers, and photography therefore requires very-wide-angle lenses (~1.5), so that it is impossible to photograph large chambers.

In order to reveal the influence of elecrical field intensity on streamer brightness, a spark chamber was supplied with pulses of 10, 15, 20, and 25 kV/cm intensity. Streamer length was kept identical in all studies here. The dependence which was found showed that streamer brightness increases nonlinearly with a linear rise in field intensity, which does not contradict reference 11. It should also be noted that at high intensities (~20 kV/cm or more) the streamer velocity increases, and the requirements for high-voltage pulse duration and stabilization become very critical.

In conclusion we want to thank B. A. Dolgoshein for discussing and helping to carry out this study, and also L. A. Zhirova, N. Kh. Artyunyan, and our American colleagues V. K. Fisher and G. Fisher, who contributed a great deal of effort during the experiments.

Erevan Physics Institute *Submitted 3/3/1968*

LITERATURE

1. *A. I. Alikanian*, Loeb Lectire Notes, Harvard University (1965).
2. *А. И. Алиханян*, Сб. „Вопросы физики элементарных частиц", Изд. АН АрмССР. 553 (1963).
3. *А. И. Алиханян*, Сб. „Вопросы физики элементарных частиц", Изд. АН АрмССР. 651 (1965).
4. *Б. А. Долгошеин*, Сб. „Вопросы физики элементарных частиц", Изд. АН АрмССР. 503 (1964).
5. *Б. А. Долгошеин, Б. И. Лучков*, ЖЭТФ, 46, № 1 (1964).
6. *Г. Чиковани, В. Ройнишвили, В. Михайлов*, ЖЭТФ, 46, № 4 (1964).
7. *А. С. Алексанян, Б. А. Долгошеин, Б. И. Лучков* и др. „Физика элементарных частиц", Атомиздат, 69 (1966).
8. *Г. А. Воробьев, Н. С. Руденко*, ПТЭ, № 1 (1965).
9. *Н. С. Руденко, В. И. Цветков*, ЖТФ, 35, 1840 (1965).
10. *Х. Мейнке, Ф. Гундлах*, Радиотехнический справочник, т. 1, ГЭИ (1960).
11. *F. Bulos, A. Boyarski, R. Diebold, A. Odian, B. Richter, F. Villa*, SLAC-Pub. 140, sept. (1965).

A NANOSECOND PULSE GENERATOR FOR SPARK CHAMBER

A. I. ALIKHANIAN, A. S. ALEXANIAN, G. A. VOROBIOV, R. L. KAVALOV
V. K. KROLL, N. S. RUDENKO and V. I. TSVETKOV

A pulse generator giving pulses up to 698 kV with a rise time of 2 nsec is described. It includes a Marx generator, an accumulation capacitor, a discharge chamber, a transfer line, and a strip line where the spark chambers are installed.

The generator is powerful (the discharge capacity is 1000 pF) and the pulse lenght can be changed with a good accuracy by a spacial two-electrode discharger.

The spark chamber was supplied with pulses of 10—25 kV/cm electric field strength. At high strength the streamer velocity rises and the requirements to the pulse lenght and to the stabilization of high voltage pulse besome critical.

DISTRIBUTION LIST

DISTRIBUTION DIRECT TO RECIPIENT

ORGANIZATION		MICROFICHE
A205	DMATC	1
A210	DMAAC	2
B344	DIA/RDS-3C	9
C043	USAMIIA	1
C509	BALLISTIC RES LABS	1
C510	AIR MOBILITY R&D LAB/FIO	1
C513	PICATINNY ARSENAL	1
C535	AVIATION SYS COMD	1
C591	FSTC	5
C619	MIA REDSTONE	1
D008	NISC	1
H300	USAICE (USAREUR)	1
P005	DOE	1
P050	CIA/CRB/ADD/SD	2
NAVORDSTA (50L)		1
NASA/NST-44		1
AFIT/LD		1
LLL/Code L-389		1
NSA/1213/TDL		2

ORGANIZATION		MICROFICHE
E053	AF/INAKA	1
E017	AF/RDXTR-W	1
E403	AFSC/INA	1
E404	AEDC	1
E408	AFWL	1
E410	ADTC	1
	FTD	
	CCN	1
	ASD/FTD/NIIS	3
	NIA/PHS	1
	NIIS	2