AFAPL-TR-78-6
Part VIII

AD A094087

ROTOR-BEARING DYNAMICS TECHNOLOGY DESIGN GUIDE

Part VIII A Computerized Retrieval System for Fluid Film Bearings

SHAKER RESEARCH
BALLSTON LAKE, NEW YORK 12019

OCTOBER 1980

TECHNICAL REPORT AFAPL-TR-78-6, Part VIII
Interim Report for Period March 1979 - March 1980

Approved for public release; distribution unlimited.

DDC FILE COPY

AERO PROPULSION LABORATORY
AIR FORCE WRIGHT AERONAUTICAL LABORATORIES
AIR FORCE SYSTEMS COMMAND
WRIGHT-PATTERSON AIR FORCE BASE, OH 45433

DTIC
ELECTE
JAN 26 1981
S D
A

81 1 23 084

NOTICE

When Government drawings, specifications, or other data are used for any purpose other than in connection with a definitely related Government procurement operation, the United States Government thereby incurs no responsibility nor any obligation whatsoever; and the fact that the Government may have formulated, furnished, or in any way supplied the said drawings, specifications, or other data, is not to be regarded by implication or otherwise as in any manner licensing the holder or any other person or corporation, or conveying any rights or permission to manufacture, use, or sell any patented invention that may in any way be related thereto.

This report has been reviewed by the Office of Public Affairs (PA) and is releasable to the National Technical Information Service (NTIS). At NTIS, it will be available to the general public, including foreign nations.

This technical report has been reviewed and is approved for publication.

John B. Schrand
JOHN B. SCHRAND
Project Engineer

Howard F. Jones
HOWARD F. JONES
Chief, Lubrication Branch

FOR THE COMMANDER

Robert D. Sherrill
ROBERT D. SHERRILL
Chief, Fuels and Lubrication Division

If your address has changed, if you wish to be removed from our mailing list, or if the addressee is no longer employed by your organization please notify AFWAL/POSL, WPAFB, OH 45433 to help us maintain a current mailing list.

Copies of this report should not be returned unless return is required by security considerations, contractual obligations, or notice on a specific document.

AIR FORCE/56780/31 December 1980 — 270

DISCLAIMER NOTICE

THIS DOCUMENT IS BEST QUALITY PRACTICABLE. THE COPY FURNISHED TO DTIC CONTAINED A SIGNIFICANT NUMBER OF PAGES WHICH DO NOT REPRODUCE LEGIBLY.

6223F

SECURITY CLASSIFICATION OF THIS PAGE *(When Data Entered)*

19 REPORT DOCUMENTATION PAGE

READ INSTRUCTIONS BEFORE COMPLETING FORM

1. REPORT NUMBER: AFAPL-TR-78-6 Part VIII (18)	2. GOVT ACCESSION NO.: AD-A094087 (9)
3. RECIPIENT'S CATALOG NUMBER	
4. TITLE (and Subtitle): ROTOR-BEARING DYNAMICS TECHNOLOGY DESIGN GUIDE. Part VIII. A Computerized Data Retrieval System for Fluid Film Bearings. (6)	5. TYPE OF REPORT & PERIOD COVERED: Technical Interim Report. March 1979 — March 1980
	6. PERFORMING ORG. REPORT NUMBER: SRC-79-TR-46 (14)
7. AUTHOR(s): C.H.T. Pan, C. Fiedler, B. F. Geren, J. A. Bartlett (10)	8. CONTRACT OR GRANT NUMBER(s): F33615-76-C-2038 (15)
9. PERFORMING ORGANIZATION NAME AND ADDRESS: Shaker Research Corporation, Northway 10, Executive Park, Ballston Lake, N.Y. 12019 (16)	10. PROGRAM ELEMENT, PROJECT, TASK AREA & WORK UNIT NUMBERS: 3048 06 85 (17) 06
11. CONTROLLING OFFICE NAME AND ADDRESS: Air Force Wright Aeronautical Laboratory/POSL, Wright-Patterson Air Force Base, Ohio 45433 (11)	12. REPORT DATE: October 1980
	13. NUMBER OF PAGES: 239
14. MONITORING AGENCY NAME & ADDRESS *(If different from Controlling Office)* (12) 250	15. SECURITY CLASS. *(of this report)*: Unclassified
	15a. DECLASSIFICATION/DOWNGRADING SCHEDULE

16. DISTRIBUTION STATEMENT *(of this Report)*

Approved for public release; distribution unlimited.

17. DISTRIBUTION STATEMENT *(of the abstract entered in Block 20, if different from Report)*

18. SUPPLEMENTARY NOTES

19. KEY WORDS *(Continue on reverse side if necessary and identify by block number)*

Fluid Film Bearings
Rotordynamics
Data Bank
Data Retrieval
Interpolation
Extrapolation
Pedestal Effects

20. ABSTRACT *(Continue on reverse side if necessary and identify by block number)*

This report describes a computerized data storage retrieval system for the static and dynamic characteristics of fluid film bearings. The procedure combines asymptotic power law extrapolation outside the stored data range with smooth interpolation within the data table. Thirty-one data tables given in ~~AFAPL-TR-78-6, Part VI~~ have been prepared and installed in the system. The procedure allows addition of new data tables in the future. The retrieval software allows the user to list the data content in either →

DD FORM 1 JAN 73 1473 EDITION OF 1 NOV 65 IS OBSOLETE
S/N 0102-014-6601

SECURITY CLASSIFICATION OF THIS PAGE *(When Data Entered)*

391231

the dimensional or the dimensionless form or to generate data lines in the sequence and format directly usable as input to the rotordynamics software described ~~in AFAPL-TR-78-6, Part I.~~ Inertia, compliance and damping effects of the pedestal can be included in the retrieval dynamic characteristics of each bearing.

PREFACE

The work reported herein is for a partial fulfillment of USAF Contract No. AF33615-76-C-2038. Dr. Coda H. T. Pan, the Principal Investigator of the contract, was directly involved in the execution of the technical effort with the assistance of Mr. B. F. Geren, Ms. J. A. Bartlett, and Mr. S. Fiedler. The contract was initiated under Project 3048, "Fuels, Lubrication and Fire Protection," Task 304806, "Aerospace Lubrication," Work Unit 30480685, "Rotor-Bearing Dynamics Design."

The work reported herein was performed during the period March 1979 to March 1980 under the direction of John B. Schrand (AFWAL/POSL) and Dr. James F. Dill (AFWAL/POSL), Project Engineers. The report was released by Shaker Research Corporation in April 1980.

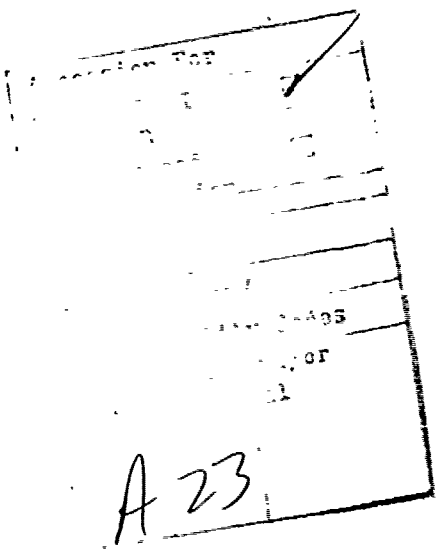

TABLE OF CONTENTS

Section		Page
I	INTRODUCTION	1
II	DYNAMIC CHARACTERISTICS OF A JOURNAL BEARING	3
	2.1 Static Equilibrium Condition	3
	2.2 Dynamic Perturbations	8
	2.3 Symmetry Law for the Damping Matrix	11
	2.4 Natural Orbits and Effective Stiffness/ Damping Constants	11
III	RETRIEVAL SYSTEM	19
	3.1 Contents of the Bearing Data Bank	19
	3.2 Interfacing Bearing Data with Rotordynamics Software	24
	3.3 The Retrieval Procedure	28
	3.4 Retrieval Data Tables	30
IV	FOUNDATIONS OF THE STORAGE-RETRIEVAL METHOD	42
	4.1 The Operating Parameter	42
	4.2 Full Range Interpolation	44
	4.3 Correction for L/D Variation	47
	4.4 Data Smoothing	51
APPENDIX A	SAMPLE RUN	56
APPENDIX B	DYNAMIC ANALYSIS OF A SHORT JOURNAL BEARING	93
APPENDIX C	THE HALF SOMMERFELD SOLUTION	106
APPENDIX D	LISTING OF RETRIEVAL FILES	109
APPENDIX E	LISTING OF SOURCE PROGRAM	214
REFERENCES		239

LIST OF TABLES

Table No.		
1	Contents of Data Bank	20
2	Typical Retrieval File	32
3	Contents of Retrieval File with Heading	35
B-1	Static and Dynamic Characteristics of Short Journal Bearing	103
B-2	Natural Orbit Parameters of Short Journal Bearing (a) $\varepsilon = 0.5$, (b) $\varepsilon = 0.8$	105

NOMENCLATURE

a_o	near field constant
b_o	effective damping constant (lb-sec/in); far field constant
B_{xx}, B_{xy}, etc.	damping coefficients (lb-sec/in)
[B]	damping matrix (lb-sec/in)
$\bar{B}_{xx}$, $\bar{B}_{xy}$, etc.	$2\pi C\{\mu LD(R/C)^2\}^{-1}$ X (B_{xx}, B_{xy}, etc.)
$[\bar{B}]$	$2\pi C\{\mu LD(R/C)^2\}^{-1}$ [B]
C	radial arc clearance (in)
C_b	radial bearing clearance (in)
D	journal diameter (in)
e	eccentricity (in)
f	vibrational frequency (Hz)
F_x, F_y	components of bearing reaction force (lb)
F'_x, F'_y	components of perturbation bearing reaction (lb)
$\tilde{F}_x$, $\tilde{F}_y$	complex amplitudes of F'_x and F'_y for simple harmonic motion (lb)
G_x, G_y	complex coefficients in the governing equation for the eigenvector
J_p	pitching mass moment of inertia of a tilting pad
$\bar{J}$	$J_p N_s[\mu(R/C)^2(LD)R]$
k_o	effective stiffness constant (lb/in)
K_{xx}, K_{xy}, etc.	stiffness coefficients (lb/in)
[K]	stiffness matrix (lb/in)
$\bar{K}_{xx}$, $\bar{K}_{xy}$, etc.	$C\{\mu N_s LD(R/C)^2\}^{-1}$ X (K_{xx}, K_{xy}, etc.)
$[\bar{K}]$	$C\{\mu N_s LD(R/C)^2\}^{-1}$ [K]
L	bearing length (in)

$[M]$	inertia matrix (lb-sec^2/in)
m	preload, $1-C_b/C$
m_o	consistent mass (lb-sec^{2}in)
N_s	rotor speed (rev/sec)
Q_{loss}	volume flow rate of lubricant lost by end leakage (in^3/sec)
$Q_{required}$	volume flow rate of lubricant (in^3/sec)
$\bar{Q}_{loss}$, $\bar{Q}_{required}$	$(N_s LDC)^{-1}$ $(Q_{loss}, Q_{required})$
R	journal radius, D/2 (in)
S	Sommerfeld number, $\mu N_s LD(R/C)^2/W$
T	bearing friction torque (in-lb)
$\bar{T}$	$4TC/(\mu N_s D^3 L)$
u_o	amplitude of $\tilde{\delta}_{xo}$
U_x, U_y	real parts of G_x and G_y, respectively
V_x, V_y	imaginary parts of G_x and G_y, respectively
$\underline{w}$	vector symbol for (δ_x, δ_y)
$\underline{w}_o$	vector symbol for $(\tilde{\delta}_{xo}, \tilde{\delta}_{yo})$
W	static load magnitude (lbs)
$\bar{W}$	1/S, static equilibrium load parameter
x, y	Cartesian coordinates of the journal bearing in the radial plane; x is along the direction of load, rotation is counterclockwise
X, Y	global Cartesian coordinates of the rotor in the radial plane
$[Z]$	$[K] = i\,[B]$

α	load scaling parameter for L/D variation
γ_o	argument of $\tilde{\delta}_{xo}$
δ_{xo}, δ_{yo}	components of static displacement (in)
δ'_x, δ'_y	components of perturbation displacement (in)
$\dot{\delta}_x$, $\dot{\delta}_y$	components of perturbation velocity (in/sec)
$\tilde{\delta}_x$, $\tilde{\delta}_y$	complex amplitudes of δ_x and δ_y for simple harmonic motion (in)
ε	e/C, eccentricity ratio of bearing arc
ε	e/C_b, eccentricity ratio of assembled bearing
μ	viscosity coefficient of lubricant (Reyns)
ν	frequency of oscillation (radians/sec)
ω	rotational speed (radians/sec)
ψ	attitude angle (deg)
τ	$\frac{2}{\pi} \tan^{-1}(\bar{W})$, load parameter function
θ_p	angular location of pivot or preload line measured from the leading edge of a bearing pad arc angle of bearing pad
χ	arc angle of bearing pad (deg)

Subscripts

Arg { }	Argument of the complex quantity { }
b	rigidly mounted bearing
o	natural orbit
p	pedestal
$(\dot{})$	time derivative

SECTION I

INTRODUCTION

Reliable prediction of the dynamic behavior of a rotor system supported by fluid film bearings (e.g., critical speeds and resonant frequencies, damped response to mass imbalance and other forms of dynamic excitation, and threshold of self-excited instability) depends on an accurate knowledge of the dynamic restraining characteristics of each bearing, which are represented by a set of eight dynamic perturbation coefficients (stiffness and damping coefficients with cross-coupling effects). Given the details of the bearing design (e.g., diameter, length, nominal operating clearance, gap geometry), lubricant viscosity and its temperature dependance, operating speed, and the lubricant film temperature, one can in principle compute steady state performance parameters (e.g., minimum gap, bearing friction, lubricant flow rate) and the dynamic perturbation coefficients. Typically, it is necessary to resort to some numerical technique in such computations. In the previous issue of the Rotor-Bearing Dynamics Technology Design Guide, one volume dealt with the calculation of performance parameters and perturbation coefficients for circular arc journal bearings operating with an incompressible lubricant [1]. Since then, other sources for such computations have also become available either as software furnished in its entirety or by allowing the user to access installed software at a computer center [2]. Some of the software have the capability of accommodating special features in the gap geometry. The proliferation efforts of such software has not yet reached a well-defined trend. Even with the availability of such software, the computation of a set of data needed as input for a rotor-bearing dynamic analysis is not a totally trivial matter. The storage memory requirement is typically quite large. Accuracy of computed data is often sensitive to details in the input preparation which may be quite obscure to an inexperienced user. For these two reasons, it was decided not to link up the bearing computer software with the rotor dynamics software. Instead, as a part of the present effort to update the Rotor-Bearing Dynamics

Technology Design Guide, it was decided that the immediate attention should be directed toward the establishment of a procedure for the convenient extraction of the dynamic perturbation coefficients from a prepared data table. A basic data bank consisting of thirty-one tables for various incompressible fluid film bearings is described in another part of the new Design Guide [3]. The data bank can be readily appended with additional tables if so desired. The required procedures for extracting the desired dynamic perturbation coefficients and for installing additional data tables are described herein.

Gas lubricated fluid film bearings are also of interest in advanced aircraft turbo-propulsion systems. Recent technological efforts in this area are primarily concerned with gas bearings of the "foil" variety. Another part in the new Design Guide will be exclusively devoted to gas bearings for machinery applications [4].

SECTION II

DYNAMIC CHARACTERISTICS OF A JOURNAL BEARING

2.1 Static Equilibrium Condition

The dynamic perturbation coefficients of a journal bearing contains the information regarding the mutual interactions between the rotor and the bearing. The perturbation analysis of a dynamic system presumes the existence of a static equilibrium condition, and deals with the response to a dynamics excitation and/or whether the equilibrium condition is stable. Typically, the dynamic perturbation coefficients are dependent on the static equilibrium state. Parameters which define the static equilibrium condition of a journal bearing are illustrated in Fig. 1, which depicts the cross-sectional view of the space between the journal, the portion of shaft which passes through the bearing bushing, and the bushing inner surface, which is shown as a circle for the present purpose.

In the lateral plane, the x-axis of a two-dimensional right-handed Cartesian coordinate system is oriented along the direction of the static load W. Sense of rotation is by convention required to be counterclockwise. Under load, the journal center is displaced from the bearing center. The amplitude of the displacement is called bearing eccentricity e. It is a peculiarity of the fluid film bearing that the displacement vector is not necessarily parallel to the load vector. The angle measured from the load vector to the displacement vector (in the counterclockwise direction) is called the attitude angle ψ.

The overall geometry of the journal bearing is described by three dimensions; namely, the length L, the diameter D, and the clearance C. There is some variance in the literature regarding the connotation of the clearance. In the present document, it represents the radial distance between the journal surface and the bushing surface (or a portion thereof) when the centers of curvature of the two surfaces are made coincident. The operating condition of the journal bearing

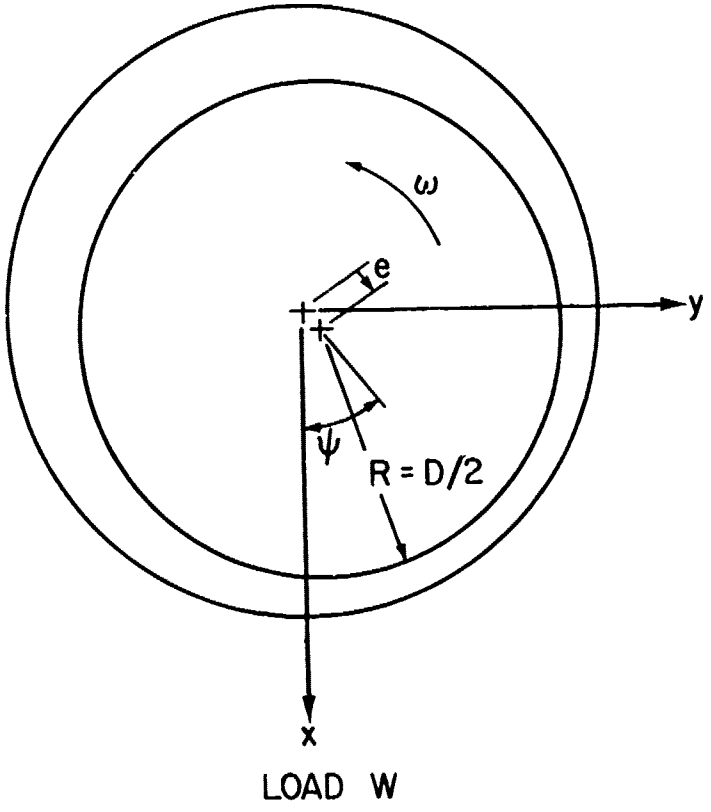

Figure 1 Static Equilibrium Condition of a Journal Bearing

is defined in terms of the rotational speed N_s (in units of revolution per sec) and the lateral load W.(in pounds).

It is also necessary to specify the lubricant viscosity, which in turn is temperature dependent. Actually the lubricant temperature varies not only across the film thickness, but also along the passage through the bearing gap. Since it is impractical to allow for actual temperature dependance of viscosity in the computation of bearing operation characteristics, it is necessary to exer ise a judicious judgment in specifying the effective temperature level. In principle, a heat balance ca.: be performed among friction heat generation, convection cooling by the lubricant flow, and conduction cooling through journal and bushing surfaces. However, uncertainty in the operating temperature level itself is typically sufficient to obscure other considerations. Therefore, for the present purpose, it is recommended that high-low estimates of the operating temperature be used for the determination of the effective lubricant viscosity in lieu of a more thorough treatment of the thermal problem.

In order to allow general applicability to bearings possessing geometrical similarity irrespective of size, clearance to radius ratio, lubricant viscosity, and rotor speed, a data table is compiled in terms of dimensionless variables. Such dimensionless representation lends the data naturally to scaling in accordance with first principles. Among the parameters which represent the static equilibrium condition, specification of the load vector is sufficient. Other parameters are unique functions of the load vector (in the dimensionless representation). The directional parameter of the load vector relates to a reference axis which is peculiar to the bearing geometry. A plain circular bearing does not have such a reference axis due to its rotational symmetry; therefore, the load parameter is complete in terms of amplitude only. For other bearings (e.g., the two-lobe configuration) the direction of the load vector measured from a suitable reference

axis of the particular configuration is also a relevant parameter. The Sommerfeld number

$$S = \frac{\mu N_s LD(R/C)^2}{W} \tag{1}$$

which is a natural parameter in any solution of the lubrication equation for a journal bearing, can be directly utilized to represent the amplitude of the static load. The latter appears in the right-hand side of Eq. (1), while all other quantities are presumably known for a specific problem. Note that the journal diameter D is customarily represented in conjunction with the bearing length L to describe the projected area; at the same time, the journal radius R also appears in a ratio with the clearance C. In fact a bearing engineer often thinks of (LD) and (C/R) as independent design parameters. The reciprocal of the Sommerfeld number is customarily accepted as the dimensionless representation of the static load (amplitude) and is sometimes referred to as the load parameter:

$$\bar{W} = 1/S = \frac{W}{\mu N_s LD(R/C)^2} \tag{2}$$

A brief comment on the applicable units is in order in view of the common addiction to "English units" of American and British engineers amidst the worldwide movement toward standardization via the SI units. In the "English" convention, W would be in lbs. while the consistent unit for μ is Reyns = lb-sec/in^2. If SI units are to be adhered to, then W should be in Newtons (1 N = 0.22482 lb) and μ in Pascal-sec (1 Pa = 1 N/m^2 = 1.45038×10^{-4} lb/in^2). For the reader who is more used to cgs units, it may be of interest to note

$$1 \text{ centipoise} = 1.45038 \times 10^{-7} \text{ Reyns}$$
$$= 0.001 \text{ Pa-sec}$$

$$1 \text{ centipoise} = 0.001 \text{ Pa-sec} = 1.45038 \times 10^{-7} \text{ Reyns}$$

Other operating parameters for the static equilibrium condition are unique functions of S or $\bar{W}$. Although they do not directly contribute to the dynamic perturbation problems, they are included in the data table for completeness. They are defined in the dimensionless representation as follows without further elaboration.

Eccentricity

Pad Eccentricity Ratio $\varepsilon = e/C$ (3a)

Bearing Eccentricity Ratio $\varepsilon_b = e/C_b$ (3b)

C_b is the largest radius which the journal center can circumscribe in an assembled bearing.

Attitude Angle

ψ (customarily given in deg)

Torque

$$\bar{T} = \frac{4TC}{\mu N_s D^3 L} \tag{4}$$

T is the frictional torque experienced by the bearing.

Lubricant Flow Rate

$$\bar{Q}_{required} = \frac{Q_{required}}{N_s LDC} \tag{5}$$

$$\bar{Q}_{loss} = \frac{Q_{loss}}{N_s LDC}$$

$Q_{required}$ is the volume flow rate which passes through the bearing inlet edge. Q_{loss} is the volume flow rate leaving the bearing gap through its ends. The excess of $Q_{required}$ over Q_{loss} is the recirculation flow rate.

2.2 Dynamic Perturbations

The perturbation point of view requires that the deviation of the force of interaction between the rotor and the bearing from the equilibrium value be sufficiently small to permit use of the method of linear superposition in the dynamic analysis. The measure of "smallness" is that the amplitude of the perturbation displacement at any instant be a small fraction of the minimum film thickness. Dynamic analysis requires allowance for time-dependence. In the case of incompressible fluid film bearings, time-dependence is associated with squeeze film effects which correspond to velocity perturbations. Combined displacement and velocity perturbations are illustrated in Fig. 2. Displacement components (δ_x', δ_y') and velocity components ($\dot{\delta}_x$, $\dot{\delta}_y$) form a complete set of perturbation parameters. The instantaneous bearing reaction has the components

$$F_x = -W + F_x'$$

$$F_y = F_y'$$

While the static equilibrium displacement is determined by $e = C\varepsilon$ and ψ, both ε and ψ being unique functions of $\bar{W} = W(C/R)^2/(\mu N_s LD)$, the perturbation hypothesis allows one to express the perturbation reaction components to be

$$F_x' = -K_{xx}\,\delta_x' - B_{xx}\,\dot{\delta}_x - K_{xy}\,\delta_y' - B_{xy}\,\dot{\delta}_y \qquad (7a)$$

$$F_y' = -K_{yx}\,\delta_x' - B_{yx}\,\dot{\delta}_x - K_{yy}\,\delta_y' - B_{yy}\,\dot{\delta}_y \qquad (7b)$$

The complete set of perturbation coefficients includes the stiffness coefficients (K_{xx}, K_{xy}, K_{yx}, K_{yy}) and the damping coefficients

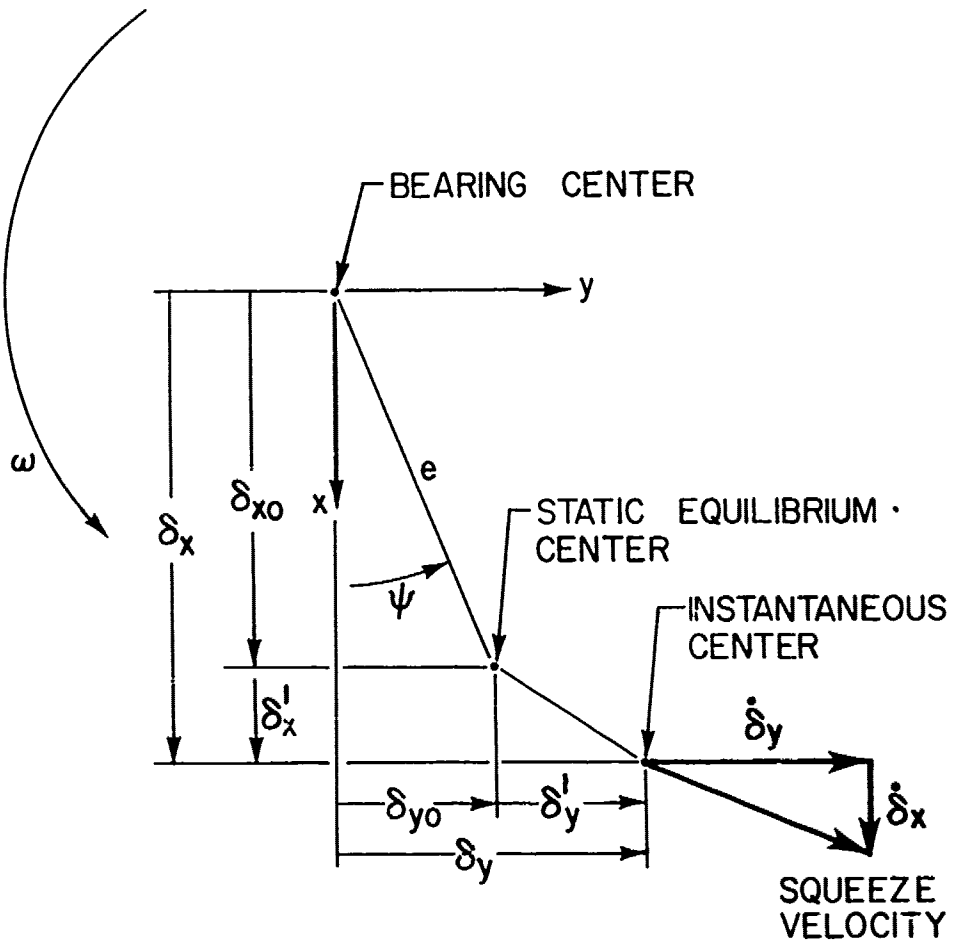

Figure 2 Displacement and Kinematic Perturbation Vectors

(B_{xx}, B_{xy}, B_{yx}, B_{yy}). Double subscripts are necessary because the perturbation reaction is not necessarily co-linear with either the perturbation displacement or the perturbation velocity. The first subscript denotes the direction of the reaction, and the second subscript represents the direction of the perturbation parameter. The stiffness coefficients are associated with displacement perturbations while the damping coefficients are associated with kinematic (velocity) perturbations. It is customary to employ the notations of matrix algebra to write

$$\left[K\right] = \begin{bmatrix} K_{xx} & K_{xy} \\ K_{yx} & K_{yy} \end{bmatrix} \; ; \quad \left[B\right] = \begin{bmatrix} B_{xx} & B_{xy} \\ B_{yx} & B_{yy} \end{bmatrix} \tag{8}$$

The perturbation coefficients are obtained by solving the lubrication equation which is linearized with respect to each of the eight perturbation parameters one at a time, then integrating the film pressure with the appropriate projection of bearing surface.

The perturbation coefficients can also be represented in the dimensionless form to allow dynamic scaling for geometrically similar bearings. Thus,

$$\left[\bar{K}\right] = \left[\frac{\mu N_s LD(R/C)^2}{C}\right]^{-1} \left[K\right] \tag{9a}$$

$$\left[\bar{B}\right] = \left[\frac{\mu LD(R/C)^2}{2\pi C}\right]^{-1} \left[B\right] \tag{9b}$$

From Eq. (2) one can write

$$\mu N_s LD(R/C)^2 = WS$$

Therefore, it may also be written

$$\left[\bar{K}\right] = \left(\frac{C}{WS}\right)\left[K\right] \; ; \quad \left[\bar{B}\right] = \left(\frac{\omega C}{WS}\right)\left[B\right] \tag{10}$$

$\left[K\right]$ and $\left[B\right]$ clearly are dependent on the static equilibrium parameter $\bar{W}$.

2.3 Symmetry Law for the Damping Matrix

It has been shown that the damping matrix is symmetrical provided the boundary conditions of the perturbation problem are time invariant [5]; that is

$$\bar{B}_{yx} = \bar{B}_{xy} \tag{11}$$

Bearings with fixed film boundaries or with a cavitation break up boundary determined by the Swift-Stieber condition [6, 7] inherently obey this symmetry relationship. Some approximate computation schemes may not conform to this requirement but otherwise yield fairly suitable results [3]. For this reason, the data retrieval system enforces this symmetry condition by substituting

$$(\bar{B}_{xy})_{adj} = (\bar{B}_{yx})_{adj} = \frac{1}{2}(\bar{B}_{xy} + \bar{B}_{yx}) \tag{12}$$

in place of $(\bar{\bar{B}}_{xy}, \bar{B}_{yx})$ which are directly extracted from a data table and may not have identical values. Clearly, a data table which already satisfies Eq. (11) is not affected by this adjustement.

2.4 Natural Orbits and Effective Stiffness/Damping Constants

2.4.1 General Case: $Z_{xy} Z_{yx} \neq 0$

Suppose the perturbation motion is simple harmonic so that

$$(\delta_x', \delta_y') = \mathrm{Re}\{(\tilde{\delta}_x, \tilde{\delta}_y)e^{i\nu t}\} \tag{13}$$

The corresponding perturbation reactions are

$$(F_x', F_y') = \mathrm{Re}\{(\tilde{F}_x, \tilde{F}_y)e^{i\nu t}\} \tag{14}$$

To make use of matrix notation, write

$$\underline{w} = \begin{Bmatrix} \tilde{\delta}_x \\ \tilde{\delta}_y \end{Bmatrix} \quad ; \quad \underline{P} \begin{Bmatrix} \tilde{F}_x \\ \tilde{F}_y \end{Bmatrix} \tag{15}$$

Given the stiffness and damping matrices, the perturbation reaction can be computed as

$$\underline{P} = -\left[K \right] + i\nu \left[B \right] \underline{w} \tag{16}$$

One can seek the condition of diagonalization of the above equation; i.e. provided the components of $\underline{w}$ assume a special relative amplitude and phase relationship, one can write

$$\underline{P}_o = -(k_o + i\nu b_o)\, \underline{w}_o \tag{17}$$

Subscript "o" designates the special relationship which describes a natural orbit. The physical interpretation of Eq. (17) is that the bearing behaves like a spring-dashpot restraint if the perturbed motion is a natural orbit, the spring and dashpot constants being respectively k_o and b_o.

Given [K] and [B] of a bearing, k_o and b_o can be found at any frequency ν as roots of a complex eigenvalue problem. Accordingly, $\underline{w}_o$ can be determined as the corresponding eigenvector. Upon first identifying $\underline{P}$ and $\underline{w}$ in Eq. (16) with $\underline{P}_o$ and $\underline{w}_o$ respectively, and then eliminating $\underline{P}_o$ between Eqs. (16) and (17), one obtains the homogeneous equation

$$\left[\left[K \right] + i\nu \left[B \right] - (k_o + i\nu b_o) \left[I \right] \right] \underline{w}_o = \underline{0} \tag{18}$$

[I] is the identity matrix with unity as its diagonal elements and null elements elsewhere. Disregarding the possibility that $\underline{w}_o$ may be a null vector, the characteristic determinant should vanish. k_o and b_o are roots of the characteristic determinant and are found as sets which are consistent

with the null condition of both real and imaginary parts of the characteristic determinant. The characteristic determinant is

$$\{Z_{xx} - (k_o + i\nu b_o)\}\{Z_{yy} - (k_o + i\nu b_o)\} - Z_{xy}Z_{yx} = 0 \qquad (19)$$

where, $Z_{xx} = K_{xx} + i\nu B_{xx}$, etc.; and an explicit solution can be found as

$$k_o + i\nu b_o = \frac{1}{2}(Z_{xx} + Z_{yy}) \mp Z_o \qquad (20)$$

where

$$Z_o = \frac{1}{2}\sqrt{(Z_{xx} - Z_{yy})^2 + 4\,Z_{xy}Z_{yx}} \qquad (21)$$

By convention, Z_o has a non-negative real part. The alternate signs in Eq. (20) yield two independent sets of $(k_o, \nu b_o)$. One may observe that the imaginary part of the right-hand side of Eq. (20) may not vanish with ν. Thus, it is more appropriate to keep ν and b together as a product. It is sometimes useful to define $\beta_o = (\nu b_o)/(2k_o)$ as the critical damping ratio of the natural orbit, which is related to the amplitude decrement factor of an unrestrained natural motion per cycle.

Corresponding to the two sets of $(k_o, \nu b_o)$, there are two eigenvectors, which are defined by

$$\{\frac{1}{2}(Z_{xx} - Z_{yy}) \pm Z_o\}\,\tilde{\delta}_{xo} + Z_{xy}\tilde{\delta}_{yo} = 0 \qquad (22a)$$

or, alternately,

$$Z_{yx}\tilde{\delta}_{xo} - \left[\frac{1}{2}(Z_{xx} - Z_{yy}) \pm Z_o\right]\tilde{\delta}_{yo} = 0 \qquad (22b)$$

These two equations are equivalent by virtue of Eq. (19). Only in the case of very special conditions, e.g., $Z_{xy}Z_{yx} = 0$ and/or $Z_{xx}-Z_{yy} = 0$, is it necessary to treat both of them to compute the eigenvector. The eigenvector is indeterminant by an arbitrary complex factor. Therefore, one is at liberty to invoke some ad hoc scaling and phasing rules; such as

$$|\tilde{\delta}_{xo}| \div |\tilde{\delta}_{yo}| = 1 \tag{23}$$

$$\text{Arg}\{\tilde{\delta}_{xo}\} + \text{Arg}\{\tilde{\delta}_{yo}\} = 0 \tag{24}$$

which sets the eigenvector to be

$$\underline{w}_o = \begin{Bmatrix} u_o e^{i\gamma_o} \\ (1-u_o)e^{-i\gamma_o} \end{Bmatrix} \tag{25}$$

u_o (which has a non-negative value bounded by unity) and γ_o (which is one-half the relative phase between the two degrees of freedom) remain to be found. In order to avoid writing lengthy algebraic expressions, in place of Eq. (22a) or Eq. (22b), let the governing equation for the eigenvector be

$$G_x \tilde{\delta}_{xo} + G_y \tilde{\delta}_{yo} = 0 \tag{26}$$

where

$$G_x = U_x + iV_x \; ; \quad G_y = U_y + iV_y \tag{27}$$

are complex quantities. Substitution of Eq. (25) into Eq. (26) then sets real and imaginary parts separately to zero, and one finds

$$\{U_x u_o + U_y(1-u_o)\}\cos\gamma_o - \{V_x u_o - V_y(1-u_o)\}\sin\gamma_o = 0$$

$$\{V_x u_o + V_y(1-u_o)\}\cos\gamma_o + \{U_x u_o - U_y(1-u_o)\}\sin\gamma_o = 0$$

They yield, after some straightforward algebraic manipulations

$$u_o = \frac{|G_y|}{|G_x|+|G_y|} \quad ; \quad 1-u_o = \frac{|G_x|}{|G_x|+|G_y|} \tag{28}$$

$$\gamma_o = \tan^{-1} \frac{(U_x|G_y|+U_y|G_x|)}{(V_x|G_y|-V_y|G_x|)} \tag{29}$$

The principal value of Eq. (29) would be used. The eigenvector as defined by Eq. (25, 28, 29) is thus far presented in terms of a Cartesian coordinate system. It describes an elliptical orbit with the sense of whirl governed by γ_o. The sense of whirl is positive; i.e., same as the sense of shaft rotation if γ_o is in either the first or the third quadrant; and the sense of whirl is negative or opposite to that of shaft rotation if γ_o is in either the second or the fourth quadrant. In other words, the sense of whirl has the same sign as

$$\tan\gamma_o = \frac{U_x|G_y| + U_y|G_x|}{V_x|G_y| - V_y|G_x|}$$

If either Z_{xy} or Z_{yx} or both should vanish, the formulations presented above are not workable because both G_x and G_y would also vanish, rendering Eqs. (28) and (29) indeterminate. These are special cases and require separate attention.

2.4.2 No Cross-coupling: $Z_{xy} = 0$, $Z_{yx} = 0$

The homogeneous system of Eq. (18) becomes

$$\begin{Bmatrix} Z_{xx} - (k_o + i\nu b_o) & 0 \\ 0 & Z_{yy} - (k_o + i\nu b_o) \end{Bmatrix} \begin{Bmatrix} \tilde{\delta}_{xo} \\ \tilde{\delta}_{yo} \end{Bmatrix} = 0$$

Since the two degrees of freedom are totally uncoupled, the desired eigenvalue/vector sets are simply

$$k_o + i\nu b_o = Z_{xx}; \quad \tilde{\delta}_{xo} = 1, \quad \tilde{\delta}_{yo} = 0 \tag{31a}$$

and

$$k_o + i\nu b_o = Z_{yy}; \quad \tilde{\delta}_{xo} = 0, \quad \tilde{\delta}_{yo} = 1 \tag{31b}$$

2.4.3 Pseudo Uncoupled Case

One of Z_{xy} and Z_{yx} is zero, the other one is not. Write

$$Z_{jk} = 0; \quad Z_{kj} \neq 0 \tag{32}$$

The indices j or k may denote either x or y. They are always distinct. (Repeated indices designate a diagonal term; the implicit summation convention of indicial contraction is not used here.)

Eq. (18) is reduced to

$$\{Z_{jj} - (k_o + i\nu b_o)\}\ \tilde{\delta}_{jo} = 0 \tag{33}$$

$$Z_{kj}\ \tilde{\delta}_{jo} + \{Z_{kk} - (k_o + i\nu b_o)\}\ \tilde{\delta}_{ko} = 0 \tag{34}$$

Eq. (33) can be satisfied by two conditions. The first one is

$$k_o + i\nu b_o = Z_{jj} \tag{35}$$

Consequently, substituting into Eq. (34)

$$Z_{kj}\ \tilde{\delta}_{jo} + (Z_{kk} - Z_{jj})\ \tilde{\delta}_{ko} = 0 \tag{36a}$$

Following steps previously used to describe Eqs. (28) and (29), from Eq. (26), one finds

$$|\tilde{\delta}_{jo}| = \frac{|Z_{kk}-Z_{jj}|}{|Z_{kj}|+|Z_{kk}-Z_{jj}|} \quad ; \quad |\tilde{\delta}_{ko}| = \frac{|Z_{kj}|}{|Z_{kj}|+|Z_{kk}-Z_{jj}|} \tag{37a}$$

$$\mathrm{Arg}\{\tilde{\delta}_{jo}\} = -\mathrm{Arg}\{\tilde{\delta}_{ko}\}$$

$$= \tan^{-1}\left[\frac{K_{kj}|Z_{kk}-Z_{jj}|+ (K_{kk}-K_{jj})|Z_{kj}|}{\nu(B_{kj}|Z_{kk}-Z_{jj}|- (B_{kk}-B_{jj})|Z_{kj}|)}\right] \tag{38a}$$

If Z_{kk} and Z_{jj} should happen to be equal, Eq. (38a) becomes indeterminate, at the same time $\tilde{\delta}_{jo}$ vanishes while $|\tilde{\delta}_{ko}|$ becomes unity. Actually, with $\tilde{\delta}_{jo}$ being zero, the argument of δ_{ko} has no physical significance and can be set to zero as an accepted convention.

The second condition which satisfies Eq. (33) is

$$\tilde{\delta}_{jo} = 0 \tag{37b}$$

Consequently, one can set

$$\tilde{\delta}_{ko} = 1 \tag{38b}$$

Then, upon substitution into Eq. (34), one obtains

$$k_o + i\nu b_o = Z_{kk} \tag{35b}$$

Note that the second eigenvalue/vector set is indistinguishable from the first set under the conditions of ($Z_{jk} = 0$, $Z_{kj} \neq 0$, $Z_{jj} = Z_{kk}$) which represent a truly degenerate state since only <u>one</u> eigenvalue/vector set can be found for a <u>two</u>-degrees-of-freedom system.

The parameters ($\tilde{\delta}_{xo}$, $\tilde{\delta}_{yo}$) are Cartesian components of the natural orbit. Since every simple harmonic orbit takes on the shape of an ellipse, the natural orbit can be represented by:

- ratio of minor/major radii of the orbit, and
- inclination of the major axis from the x-axis

The relationships between the Cartesian components and the geometric parameters are derived in another part of the Rotor-Bearing Dynamics Technology Design Guide [9].

SECTION III

RETRIEVAL SYSTEM

3.1 Contents of the Bearing Data Bank

There are presently thirty-one (31) data tables in the collection of the data bank. Each data table represents one combination of configurations, geometrical parameters, and preload setting (if applicable). A summary of the contents of the data bank is contained in Table 1.

For bearings made up of partial arc pads, there is a setup parameter called preload, which measures the distance between the arc center and the bearing center as a fraction of the nominal clearance (pad clearance). As shown in Fig. 3, the bearing clearance C_b is smaller than the original arc clearance by the amount of preload mC. In this particular illustration, the preload is centrally directed, i.e., the line of centers bisect the pad arc. All data tables thus far collected have centrally preloaded pads.

For partial arc configurations, rotational symmetry is disrupted. The direction of the load vector is to be defined with reference to the arc geometry. A lobed bearing is made up of equally spaced arcs. The direction of the load vector is specified relative to the loaded arc. A two-lobe bearing is usually parted in a horizontal plane. Thus the gravity load is commonly directed along the bi-sector of the bottom arc. Such an arrangement is said to have a load "on pad." With an odd number of lobes, the usual practice is to place one more arc on the bottom than the top. Thus the load is directed between pads for the three-lobe bearing.

The tilting shoe bearing is described similarly as the lobed bearing. The preload parameter deals with the radial displacement of the pivot point. The angular location of the pivot is equivalent to the preload direction relative to the arc. It is known what the optimum pivot location is about 55% from the leading edge. However, if the pads should be erroneously in-

TABLE 1

CONTENTS OF DATA BANK

Bearing Type	Arc Angle	L/D	Notes	Preload	Data Table Number
Plain	360	0.50			PJ-05-1
2 Lobe	160	0.50	(1),(5)	0.00	ML2-05-1
				0.25	ML2-05-2
				0.50	ML2-05-3
3 Lobe	100	0.50	(2),(5)	0.00	ML3-05-1
				0.25	ML3-05-2
				0.50	ML3-05-3
4 Shoe Tilting Pad	80	0.25	(2),(3),(4)	0.00	TP4-02-1
				0.20	TP4-02-2
				0.30	TP4-02-3
				0.50	TP4-02-4
		0.50		0.00	TP4-05-1
				0.20	TP4-05-2
				0.30	TP4-05-3
				0.50	TP4-05-4
		1.00		0.00	TP4-10-1
				0.20	TP4-10-2
				0.30	TP4-10-3
				0.50	TP4-10-4

LEGEND:

(1) Load on pad

(2) Load between pads

(3) Centrally pivoted

(4) Synchronous frequency only, and shoe inertia is neglected

(5) Centrally preloaded

TABLE 1 - CONTENTS OF DATA BANK (continued)

Bearing Type	Arc Angle	L/D	Notes	Preload	Data Table Number
5 Shoe Tilting Pad	55	0.25	(1),(3), (4)	0.00	TP5-02-1
				0.20	TP5-02-2
				0.30	TP5-02-3
				0.50	TP5-02-4
		0.50		0.00	TP5-05-1
				0.20	TP5-05-2
				0.30	TP5-05-3
				0.50	TP5-05-4
		1.00		0.00	TP5-10-1
				0.20	TP5-10-2
				0.30	TP5-10-3
				0.50	TP5-10-4

LEGEND:

(1) Load on pad

(2) Load between pads

(3) Centrally pivoted

(4) Synchronous frequency only, and shoe inertia is neglected

(5) Centrally preloaded

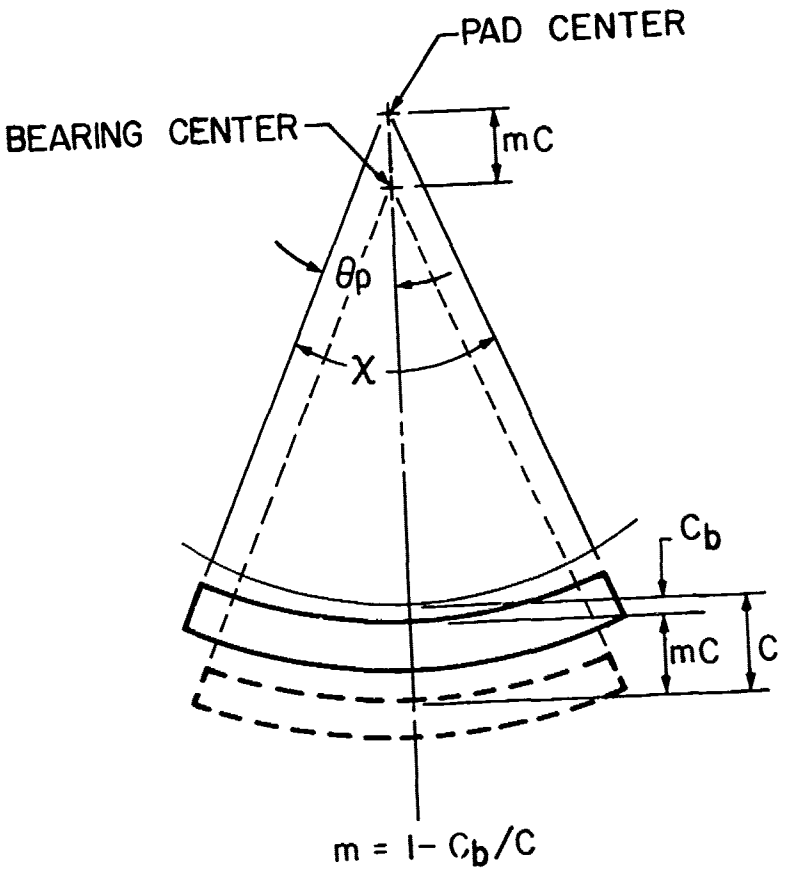

Figure 3 Centrally Preloaded Partial Arc ($\theta_p = \chi/2$)

stalled backwards, the load capacity of the bearing would be drastically smaller. The centrally pivoted arrangement is error safe since it acts identically if reversed. The tilting shoe bearings in the present data bank are all centrally pivoted.

An ideal pivot is incapable of exerting moment to the bearing pad. This condition adds two additional parameters for a complete definition of the dynamic data; namely,

$$\bar{J} = \frac{J_p N_s}{\mu (R/C)^2 (LD) R} \tag{39}$$

$$\bar{\nu} = f/N_s \tag{40}$$

which relate to the pitch moment of inertia of a bearing pad and the ratio of the vibrational frequency to the rotation frequency, respectively. In the present data, ($\bar{J} = 0$ and $\bar{\nu} = 1$) are imposed. The inertialess assumption is usually adequate since the inertia of each pad should be quite small in comparison with the rotor inertia. An exception is the unloaded shoe, which would become vulnerable to the pathological condition of shoe fluttering. For this reason, tilting shoe bearings should always be preloaded. The data tables for the unloaded tilting shoe bearings are included mainly for reference. The nature of frequency dependance of the perturbation coefficients of tilting shoe bearings in effect reflects the phase relationships between the rotor motion and the pitching motions of the shoes. Fortunately, the total resultant of all shoes does not significantly vary with frequency. Therefore, the synchronous data ($\bar{\nu} = 1$) can be used for non-synchronous rotor dynamic studies with fair accuracy. If the precise data with allowance for shoe inertias and frequency dependance should be desired, the dynamic assembly procedure should be followed to synthesize the bearing characteristics from single pad characteristics [3].

All data tables in the present collection concern journal bearings which influence dynamics of the rotor system by reacting to lineal motions of the rotor. Some bearing support systems can react to angular motions of the rotor. A long journal bearing and a large thrust bearing runner are two such examples. In reacting to an angular motion of the rotor (in the radial plane), the bearing can provide a restraining moment. The required data parameters for such bearings are angular stiffness and angular damping coefficients which react to angular displacements and angular velocities, respectively. These coefficients also may induce anisotropic and cross-coupling features. The storage and retrieval methodologies described in this document can be readily adapted to handle angular bearings.

3.2 Interfacing Bearing Data with Rotor Dynamics Software

Each bearing data table is necessarily restricted to the following two conditions:

1. The bearing data is presented in a coordinate system which is peculiar to static load vector acting on the particular bearing.
2. The pedestal of the bearing is assumed to be rigid.

The bearing data retrieval system incorporates an interfacing procedure which removes these restrictions.

The static load vectors of all bearings in a rotor system may not share the same direction. The following circumstances require that individual load directions be assigned to each bearing:

1. For an overhung rotor, if its center of gravity is outboard, the load vectors at the two bearings would have opposite directions.

2. Gyroscopic loads which occur during rapid maneuvers of a military aircraft, usually are oppositely directed at the two main support bearings.

3. Laterally coupled rotors (e.g., in a transmission box) exert force on each other and tend to cause load vectors at various bearings to assume distinct directions.

4. Misalignment loads (for rotors supported by three or more bearings) generally may not be co-planar with the gravity load.

For these reasons, it is necessary to allow a deviation of the static bearing load vector from an axis of the global coordinates of the rotor: Let (X, Y) and (x, y), respectively, be global (rotor) and local (bearing) coordinate axes in the Cartesian representation, with the x-axis directed along the static load. Let ϕ be the angle measured from X to x as illustrated in Fig. 4. The transformation of a vector represented in the bearing coordinates to that represented in the rotor coordinates is given by the relation

$$\begin{bmatrix} X \\ Y \end{bmatrix} = \begin{bmatrix} \cos\phi & -\sin\phi \\ \sin\phi & \cos\phi \end{bmatrix} \begin{bmatrix} x \\ y \end{bmatrix} \tag{41}$$

Transformation of the stiffness and damping matrices is achieved by the following formula

$$\begin{bmatrix} K, B \end{bmatrix}_{\text{Rotor}} = \begin{bmatrix} \cos\phi & -\sin\phi \\ \sin\phi & \cos\phi \end{bmatrix} \begin{bmatrix} K, B \end{bmatrix}_{\text{Bearing}} \begin{bmatrix} \cos\phi & \sin\phi \\ -\sin\phi & \cos\phi \end{bmatrix} \tag{42}$$

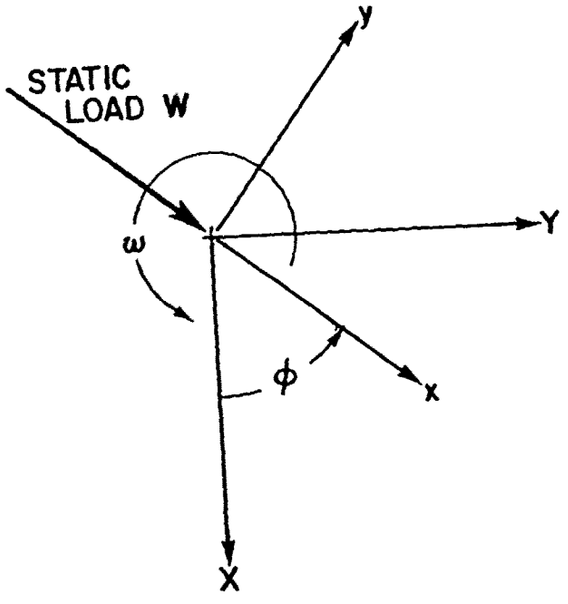

XY ROTOR COORDINATES
xy BEARING COORDINATES

Figure 4 Rotor and Bearing Coordinate Systems

Pedestal compliance and/or damping can contribute significantly to the rotor behavior. Pedestal compliance can be modelled in terms of lumped parameters.

$$\underline{\underline{Z}}_p = \underline{\underline{K}}_p + [M]_p \frac{d^2}{dt^2} + [B]_p \frac{d}{dt} \tag{43}$$

This is regarded as an operator for the displacement of the pedestal. The subscript "p" labels the pedestal effects. For a simple harmonic motion with the time dependence factor $\exp\{i\nu t\}$, Eq. (43) is reduced to

$$\underline{\underline{Z}}_p = \underline{\underline{K}}_p - \nu^2 \underline{\underline{M}}_p + i\nu [B]_p \tag{44}$$

Since the bearing reaction is directly transmitted to the pedestal

$$\underline{P} = -\underline{\underline{Z}}_b (\underline{w}_b - \underline{w}_p) \tag{45a}$$

$$= -\underline{\underline{Z}}_p \underline{w}_p \tag{45b}$$

$[Z]_b$ is the impedance matrix of the (rigidly mounted) bearing. $\underline{w}_b$ and $\underline{w}_p$ are displacement vectors of the bearing and of the pedestal in the matrix notation, respectively. Eliminating $\underline{P}$ between Eqs. (45a) and (45b), one finds

$$-[\underline{\underline{Z}}_b \underline{w}_b + (\underline{\underline{Z}}_p + \underline{\underline{Z}}_b) \underline{w}_p = 0$$

Solving for $\underline{w}_p$ then substituting back into Eq. (45b), one obtains

$$\underline{P} = -\left[Z\right]_p \left[\left[Z\right]_p + \left[Z\right]_b\right]^{-1} \left[Z\right]_b \underline{w}_b \tag{46}$$

which in essence defines the effective support impedance as

$$\left[Z\right]_{effective} = \left[Z\right]_p \left[\left[Z\right]_p + \left[Z\right]_b\right]^{-1} \left[Z\right]_b \tag{47}$$

The retrieval software provides the user with an option to allow for pedestal compliance. Upon selecting this option, the user can furnish data consisting of up to ten numbers which define the elements of the three matrices $\left[K\right]_p$, $\left[B\right]_p$, and $\left[M\right]_p$. Upon extracting $\left[Z\right]_b$ from the data bank, Eq. (47) is executed by the interfacing software.

Aside from performing required coordinate transformations and incorporating pedestal compliance effects, the bearing data retrieval system also organizes the results in a tabular form consistent with the input format of the rotor dynamics software [9].

3.3 The Retrieval Procedure

The Fluid Film Bearing Data Bank is designed to furnish numerical information of bearing support characteristics needed in the performance of a variety of rotordynamic studies. The software for data retrieval requires the user to furnish the following input:

1. Location of Data Table -- The user has the choice of selecting a data table from the index of the available data bank or submitting the data bank to the file management system of the computer center in advance of the retrieval run. In either case, the data table is a result of preparation for full range interpolation according to the method to be described in Section IV.

2. Design Parameters of the Bearing.

   - o lubricant viscosity (centipoise)
   - o bearing diameter (in)
   - o bearing length (in)
   - o clearance (in)

3. Operating Parameters of the Bearing.

   - o load magnitude (lbs)
   - o load direction defined by the angle measured from the vertical axis in the sense of shaft rotation (deg)
   - o shaft rotational speed (rpm)
   - o vibration frequency as may be needed in certain bearing support systems (Hz)

4. Pedestal Compliance Characteristics -- The user can elect to furnish lumped parameter data of the pedestal which define stiffness, damping, and mass matrices.

   - o pedestal weight (lbs)
   - o pedestal c.g. offsets in three directions (in)
   - o pedestal angular weight moment of inertia in two planes ($lb\text{-}in^2$)
   - o pedestal stiffness constants in two planes (lbs/in or in-lb/rad)
   - o pedestal damping constants in two planes (lbs-sec/in or in-lb-sec/rad)

The output of the retrieval software includes in tabular forms

1. Data sets compatible with the input format of the rotor-dynamics software [9],

2. Tabulation of the static bearing characteristics,

3. Tabulation of the dynamic bearing coefficients, and

4. Effective stiffness/damping constants and natural orbit parameters as described in Section 2.4.

Additional information pertaining to the use of the retrieval software is given in Appendix A.

3.4 Description of the Retrieval Table

The retrieval table of each bearing is furnished as a sequential FORTRAN file. Its contents include the following:

1. Alphanumeric Index - This contains the file designation, the file size or number of data points (including near- and far-field limits), L/D of the bearing, and the load scaling factor which is presently defaulted as 1.125.

2. Array of Working Parameters - This is stored as groups of seven floating point numbers, each occupying a field of eleven spaces.

3. Retrieval Data of Each of Thirteen Data Variables - The thirteen variables appear in the following order: eccentricity ratio, attitude angle, friction, required flow, lost flow, $\bar{K}_{xx}$, $\bar{B}_{xx}$, $\bar{K}_{xy}$, $\bar{B}_{xy}$, $\bar{K}_{yx}$, $\bar{B}_{yx}$, $\bar{K}_{yy}$, and $\bar{B}_{yy}$.

   The retrieval data of each variable consists of numbers which are also stored in succession in groups of seven floating point numbers each occupying a field of eleven spaces. They are stored without interruption for each variable and include: near-field exponent s_1, far-field exponent s_2, near-field constant a_o, far-field constant b_o, then for each data interval a set of spline coefficients for each of the data intervals corresponding to the array of working parameters (the comparison function and its three derivatives with respect to the working

parameter), and the comparison function for the far-field limit which should always be unity.

Table 2 shows the contents of a typical retrieval file. Table 3 is a printout of the contents with appropriate headings. The load is computed from the working parameter (TAU) according to Eq. (62) described in the next section.

A complete listing of all retrieval files of the present data bank is given in Appendix D.

TABLE 2

RETRIEVAL FILE NO ML3-05-1
FILE SIZE = 17 TYPICAL RETRIEVAL FILE
L/D = 0.5000
ALFA = 1.1250

```
 0.0000D-01 3.5768D-02 5.8456D-02 8.0138D-02 1.2718D-01 2 0721D-01 2.8602D-01
 4.4623D-01 5.7427D-01 6.5943D-01 7.6051D-01 8.1662D-01 8.4578D-01 8.7580D-01
 9.0640D-01 9.3739D-01 1.0000D 00
 1.0000D 00 0.0000D-01 1.0001D 00 1.0000D 00 1.0000D 00-1 6502D 00 0.0000D-01
 1.9803D 02 9.4249D-01-1.5236D 00 7.0830D 00-1.3293D 02 9.0948D-01-1.3971D 00
 4.0671D 00-6.6448D 01 8.8003D-01-1.3245D 00 2.6264D 00 1 2060D 01 8 2085D-01
-1.1876D 00 3.1937D 00 1.3868D-02 7.3602D-01-9.3197D-01 3.1948D 00-1 7265D 00
 6.7236D-01-6.8557D-01 3.0587D 00-3.4465D 00 5.9942D-01-2.3977D-01 2.5066D 00
 6.8959D-01 5.8950D-01 8.6833D-02 2.5949D 00 5.2071D 00 6.0685D-01 3.2671D-01
 3.0383D 00 1.0659D 01 6.5722D-01 6.8826D-01 4.1157D 00 2 4396D 01 7 0303D-01
 9.5757D-01 5.4845D 00 2.6015D 01 7.3340D-01 1.1286D 00 6.2432D 00 3.4971D 01
 7.7026D-01 1.3318D 00 7.2931D 00 6.2869D 01 8.1471D-01 1 5843D 00 9.2165D 00
 3.4883D 01 8.6841D-01 1.8867D 00 1.0298D 01-1.6446D 02 1.0000D 00
 0.0000D-01-5.0000D-01 9.0000D 01 1.0007D 02 1.0000D 00-2.2698D 00 0.0000D-01
 5.0412D 02 9.2266D-01-1.9473D 00 1.8031D 01-4.9054D 02 8.8216D-01-1.6645D 00
 6.9020D 00 4.2378D 01 8.4777D-01-1.5049D 00 7.8208D 00-4.8412D 01 7 8479D-01
-1.1905D 00 5.5436D 00-2.1033D 01 7.0546D-01-8.1422D-01 3 8601D 00-1 5182D 01
 6.5205D-01-5.5717D-01 2.6638D 00-6.8634D 00 5.9227D-01-2.1849D-01 1 5642D 00
 9.3216D-01 5.7744D-01-1.0573D-02 1.6835D 00 4.1808D 00 5 8307D-01 1 4796D-01
 2.0396D 00 1.5715D 01 6 1115D-01 4.3440D-01 3.6280D 00 4 4005D 01 6 4253D-01
 7.0720D-01 6.0969D 00 5.9916D 01 6.6600D-01 9.1050D-01 7.8443D 00 1.3540D 02
 6.9748D-01 1.2070D 00 1.1909D 01 1.6682D 02 7.4078D-01 1.6494D 00 1.7013D 01
 5.4840D 02 8.0278D-01 2.4400D 00 3.4008D 01-5.4315D 02 1.0000D 00
 0.0000D-01 5.0000D-01 1.6463D 01 1.7306D 01 1.0000D 00 1 2603D 00 0 0000D-01
-3.1207D 02 1.0427D 00 1.0607D 00-1.1162D 01 3.5253D 02 1 0646D 00 8 9819D-01
-3.1636D 00-1.9538D 01 1.0933D 00 8.2500D-01-3.5872D 00 2.1639D 01 1 1185D 00
 6.8020D-01-2.5694D 00 7.0205D 00 1.1653D 00 4.9704D-01-2 0075D 00 5.1224D 00
 1.1987D 00 3.5475D-01-1.6038D 00-9.9900D-01 1 2342D 00 8 4981D-02-1 7639D 00
-9.9638D-01 1.2303D 00-1.4904D-01-1.8914D 00-3.7706D 00 1 2104D 00-3 2379D-01
-2.2126D 00-6.9700D 00 1.1651D 00-5.8304D-01-2.9171D 00 5.6679D 00 1.1280D 00
-7.3778D-01-2.5991D 00 4.7046D 01 1.1056D 00-7.9358D-01-1 2270D 00-9 1263D 01
 1.0808D 00-8.7155D-01-3.9670D 00 4.5428D 02 1.0544D 00-7 8032D-01 9.9308D 00
-2.4352D 02 1.0338D 00-5.8950D-01 2.3839D 00-3.8074D 01 1 0000D 00
 0.0000D-01 0.0000D-01 4.7133D 00 4.0711D 00 1.0000D 00 7 7286D-02 0.0000D-01
-2.9511D 01 1.0025D 00 5.8409D-02-1.0555D 00 1.0540D 01 1 0036D 00 3.7173D-02
-8.1640D-01 2.6434D 01 1.0043D 00 2.5686D-02-2.4323D-01-2 2245D 00 1.0052D 00
 1.1783D-02-3.4787D-01 2.5114D 00 1.0052D 00-8.0156D-03-1.4687D-01 2 7507D 00
 1.0044D 00-1.1048D-02 6.9898D-02-2 5357D-01 1 0033D 00-3 1042D-03 2 9274D-02
 4.7336D-01 1.0033D 00 4.5244D-03 8 9884D-02-9.1681D-01 1 0039D 00 8.8545D-03
 1.1804D-02 3 8665D-01 1.0050D 00 1.2023D-02 5.0886D-02 3 5435D-01 1 0057D 00
 1.5435D-02 7.0766D-02-2.0676D 01 1.0061D 00 8.7061D-03-5 3224D-01 1 7294D 01
 1.0062D 00 5.2080D-04-1.3025D-02-3.9162D 01 1 0060D 00-1 8204D-02-1 2111D 00
 2.4203D 00 1.0049D 00-5.4574D-02-1.1361D 00 1 8145D 01 1 0000D 00
 1.0000D 00 0.0000D-01 1.4902D 00 1.6170D 00 1 0000D 00-1 5480D 00 0 0000D-01
 1.2753D 02 9.4560D-01-1.4665D 00 4.5616D 00-1.1867D 02 9.1327D-01-1 3935D 00
 1.8691D 00 7.3618D 01 8.8362D-01-1.3357D 00 3 4653D 00-1 6203D 01 8.2435D-01
-1.1906D 00 2.7032D 00 7.5566D 00 7.3836D-01-9 5004D-01 3 3080D 00-4.6527D 00
 6.7339D-01-7.0381D-01 2.9413D 00-2.4167D 00 5.9672D-01-2 6360D-01 2 5541D 00
 7.0220D-01 5 8415D-01 6.9196D-02 2.6441D 00 4 6007D 00 6 0011D-01 3 1106D-01
 3.0359D 00 1.1362D 01 6.4901D-01 6 7596D-01 4 1843D 00 3 1211D 01 6 9444D-01
```

Table 2 - Typical Retrieval File (continued)

```
 9.5984D-01 5.9354D 00-7.6498D 00 7.2493D-01 1.1297D 01 5 7123D 00 5.4438D 01
 7.6166D-01 1.3257D 00 7.3467D 00 1.2255D 01 8.0579D 01 1 5562D 00 7.7216D 00
 2.6260D 02 8.5896D-01 1.9216D 00 1.5860D 01-2.5336D 02 1 0000D 00
 1 0000D 00 2.5000D 00-5.5102D-01 9.0173D-01-1.0001D 02 2.4323D 00 0.0000D-01
 7.1487D 02-9.0755D-01 2.8896D 00 2.5569D 01-9.1412D 02-8.3719D-01 3.2344D 00
 4.8283D 00 5.0437D 02-7.6507D-01 3.4576D 00 1.5761D 01-2.2806D 02-5.8893D-01
 3.9469D 00 5.0357D 00-2.7454D 00-2.5717D-01 4.7411D 00 4.8160D 00-2.0724D 02
 8.3000D-02 4.0770D 00-1.1517D 01 5.9633D 01 6.. 25D-01 2.9972D 00-1.9630D 00
-1.1046D 02 9.5828D-01 1.8404D 00-1.6106D 01 1.0971D 02 1 0679D 00 8.6662D-01
-6.7639D 00-6.0643D 00 1.1199D 00 1.5194D-01-7.3769D 00-4.4883D-01 1.1168D 00
-2.6268D-01-7.4020D 00 4.8558D 02 1.1080D 00-2.7207D-01 6 7576D 00-6.3813D 02
 1.1000D 00-3.5675D-01-1.2399D 01 3.6049D 02 1 0850D 00-5 6738D-01-1.3678D 00
-3.5481D 02 1.0650D 00-7.8015D-01-1.2363D 01 1.9747D 02 1 0000D 00
 0.0000D-01 1.5000D 00 2.0058D 00 1.4450D 01 1.0000D 00-1 8609D 00 0.0000D-01
-9.6880D 02 9.2605D-01-2.4806D 00-3.4652D 01 2.2807D 03 8 6529D-01-2.6798D 00
 1.7092D 01-1.9040D 02 8.1088D-01-2.3540D 00 1.2964D 01 2 1440D 01 7.1486D-01
-1.7204D 00 1.3973D 01-7.1428D 01 6.1582D-01-8.3091D-01 8 2564D 00-7.3256D 01
 5.7000D-01-4.0772D-01 2.4831D 00-1.1667D 01 5.2855D-01-1 5964D-01 6.1388D-01
 1.0713D 01 5.1689D-01 6.7780D-03 1.9855D 00-1.7847D 01 5.2283D-01 1.1115D-01
 4.6571D-01 3.7505D 01 5.4290D-01 3.4982D-01 4.2567D 00-4 0585D 00 5.6911D-01
 5.8228D-01 4.0290D 00 5.2698D 02 5.8998D-01 9.2381D-01 1 9396D 01 1.2142D 02
 6.2700D-01 1.5608D 00 2.3041D 01 3.0426D 02 6.8700D-01 2.4083D 00 3.2351D 01
-4.3686D 02 7.7500D-01 3.2011D 00 1.8813D 01-3.0047D 02 1 0000D 00
 0 0000D-01 2.0000D 00 1.0028D 00 2.4336D 00 1.0000D 00 2 5245D-01 0.0000D-01
 6.9107D 02 1.0143D 00 6.9450D-01 2.4718D 01-3.6921D 02 1 0357D 00 1.1603D 00
 1.6341D 01-1.1674D 02 1.0645D 00 1 4872D 00 1.3810D 01-1 4059D 02 1 1473D 00
 1.9813D 00 7.1964D 00-1.6511D 02 1.3148D 00 2.0284D 00-6.0173D 00-7.0334D 00
 1.4554D 00 1.5324D 00-6.5716D 00-2.4457D 01 1 5998D 00 1.6564D-01-1.0490D 01
 3 9955D 01 1.5490D 00-8.4997D-01-5.3741D 00 1.6620D 00 1 4573D 00-1 3016D 00
-5.2326D 00 5.4599D 01 1.3084D 00-1.5516D 00 2.8626D-01-3 7039D 01 1.2207D 00
-1.5938D 00-1.7920D 00 8.1851D 01 1 1738D 00-1.6113D 00 5.9479D-01 2.8899D 02
 1.1270D 00-1.4632D 00 9.2704D 00-1.1846D 02 1.0860D 00-1.2350D 00 5.6455D 00
 1 1328D 02 1.0510D 00-1.0057D 00 9.1561D 00-1 4624D 02 1 0000D 00
 1 0000D 00 1.5000D 00 5.0960D 00 4 3765D 00 1.0000D 00 5 0622D-01 0 0000D-01
 2 4828D 02 1.0200D 00 6.6504D-01 8.8804D 00-6.0311D 02 1 0362D 00 7 1129D-01
-4.8030D 00 2.9832D 02 1.0510D 00 6.7727D-01 1 6652D 00-4 6267D 01 1 0839D 00
 7.0441D-01-5.1129D-01-2.1501D 01 1.1368D 00 5.9464D-01-2.2320D 00 3.2866D 00
 1.1770D 00 4.2894D-01-1.9730D 00-5.9810D 00 1.2163D 00 3 6082D-02-2.9312D 00
 6 0249D 00 1.1990D 00-2.8985D-01-2.1598D 00 2.2492D 01 1 1688D 00-3.9222D-01
-2.4440D-01 5.4648D-01 1.1280D 00-4 1413D-01-1.8916D-01-2 9390D 01 1.1036D 00
-4.7101D-01-1.8382D 00 1.0071D 02 1.0895D 00-4.8179D-01 1 0986D 00-3.3966D 02
 1 0740D 00-6.0187D-01-9.0980D 00 5.6050D 02 1.0540D 00-6 1785D-01 8 0533D 00
-3 4674D 02 1.0370D 00-5 3478D-01-2.6920D 00 4 2997D 01 1 0000D 00
 0 0000D-01 2 5000D 00-2 2799D 00 2 2460D-01-1 0000D 00 8 0513D-01 0.0000D-01
-3 2357D 02-9 7367D-01 5 9815D-01-1.1573D 01-1 7063D 02-9 6341D-01 2.9166D-01
-1 5445D 01 1.4284D 03-9.5829D-01 2 9254D-01 1.5526D 01-6 0409D 02-9.3787D-01
 3 5451D-01-1 2892D 01 2 3308D 02-9 3083D-01 6 9231D-02 5 7622D 00-1.0444D 02
-9 1600D-01 1 9900D-01-2.4689D 00 9 5282D 01-8.5050D-01 1 0263D 00 1.2796D 01
-2 4658D 01-6.2283D-01 2.4626D 00 9 6391D 00 2.2912D 02-3 5458D-01 4.1143D 00
 2.9151D 01-8.5809D 01 1.9544D-01 6.6225D 00 2.0477D 01 1 0861D 02 6.0246D-01
 7.9424D 00 2.6572D 01-7.5738D 03 8 1406D-01 5.4972D 00-1 9428D 02 5 2019D 03
 9.1500D-01 2.0089D 00-3.8119D 01 2.8757D 02 9.6000D-01 9 7712D-01-2 9319D 01
 7 6561D 02 9.8000D-01 4.3616D-01-5 5929D 00 8 9329D 01 1 0000D 00
 1.0000D 00 1.5000D 00 5.0960D 00 4 3765D 00 1.0000D 00 5 0622D-01 0 0000D-01
```

(Sheet 2 of 3)

Table 2 - Typical Retrieval File (continued)

```
 2.4828D 02 1.0200D 00 6.6504D-01 8.8804D 00-6.0311D 02 1 0362D 00 7 1129D-01
-4.8030D 00 2.9832D 02 1.0510D 00 6 7727D-01 1 6652D 00-4 626;D 01 1 0839D 00
 7.0441D-01-5.1129D-01-2.1501D 01 1 1368D 00 5 9464D-01-2 2320D 00 3 2866D 00
 1.1770D 00 4.2894D-01-1.9730D 00-5 9810D 00 1.2163D 00 3 6082D-02-2 9312D 00
 6.0249D 00 1.1990D 00-2.8985D-01-2 1598D 00 2.2492D 01 1 1688D 00-3 9222D-01
-2.4440D-01 5.4648D-01 1.1280D 00-4.1413D-01-1 8916D-01-2 9390D 01 1 1036D 00
-4.7101D-01-1.8382D 00 1.0071D 02 1.0895D 00-4 8179D-01 1 0986D 00-3 3966D 02
 1.0740D 00-6.0187D-01-9.0980D 00 5 6050D 02 1 0540D 00-6 1785D-01 8 0533D 00
-3.4674D 02 1.0370D 00-5.3478D-01-2 6920D 00 4 2997D 01 1 0000D 00
 1.0000D 00 1.5000D 00 4.7203D 00 3.4007D 00 1 0000D 00 5 9625D-01 0 0000D-01
 1.1453D 02 1.0222D 00 6 6951D-01 4 0965D 00-7 9332D 02 1 0369D 00 5 5827D-01
-1.3902D 01 7.4367D 02 1.0470D 00 4 3164D-01 2 2220D 00-1 3049D 02 1 0675D 00
 3.9179D-01-3.9165D 00 2.9114D 01 1.0888D 00 1.7159D-01-1 5865D 00 7 4008D 00
 1.0980D 00 6.9544D-02-1.0032D 00-6.2259D 00 1 0920D 00-1 7108D-01-2.0007D 00
 1.7163D 01 1.0597D 00-2.8655D-01 1.9695D-01-2.5369D 01 1 0334D 00-3 6177D-01
-1.9635D 00-4.6567D 00 9.8600D-01-5 8403D-01-2.4342D 00 1 2063D 02 9 5295D-01
-5 3072D-01 4.3345D 00 2.0153D 02 9.4015D-01-3.1864D-01 1 0211D 01-2 6295D 02
 9.3400D-01-1.3058D-01 2.3174D 00 4.0015D 02 9 3300D-01 1 2767D-01 1 4562D 01
 1.0265D 01 9.4400D-01 5.8388D-01 1.4880D 01-2 3766D 02 1 0000D 00
 0.0000D-01 1.0000D 00 4.5143D 00 7 0281D 00 1 0000D 00-2 7314D 00 0 0000D-01
 6.6960D 02 9.0741D-01-2.3031D 00 2 3950D 01-4 6342D 02 8 6042D-01-1 8790D 00
 1.3436D 01-1.5225D 02 8.2258D-01-1 6234D 00 1.0135D 01-1 9908D 01 7 5708D-01
-1.1687D 00 9.1987D 00-7.0346D 01 6 8700D-01-6 5777D-01 3 5690D 00-8 1482D 00
 6.4558D-01-4.0180D-01 2.9268D 00-9 8761D 00 6 1200D-01-5 9646D-02 1 3445D 00
-4.3085D 00 6.1387D-01 7 7029D-02 7.9033D-01-9.4781D 00 6 2232D-01 1 0996D-01
-1 6820D-02 4.7353D 01 6.4150D-01 3 5017D-01 4 7696D 00-1 0745D 01 6 6834D-01
 6.0088D-01 4.1667D 00 3.5252D 02 6.8909D-01 8 7226D-01 1 4446D 01-3 9581D 02
 7.2000D-01 1.1276D 00 2 5641D 00-3.5695D 02 7.5400D-01 1 0389D 00-8 3584D 00
 2.3823D 03 7.9400D-01 1.9239D 00 6.5469D 01-1 0457D 03 1 0000D 00
```

TABLE 3

CONTENTS OF RETRIEVAL FILE WITH HEADING

(Sheet 1 of 7)

VERIFICATION OF DATA TABLE

RETRIEVAL FILE NO ML3-05-1
FILE SIZE = 17
L/D = 0.5000
ALFA = 1.1250

ECC RATIO	CONSTANT	EXPONENT
NEAR FIELD	1.0001000000D 00	1.0000000000 00
FAR FIELD	1.0000000000 00	0.0000000000-01

POINT	LOAD	TAU	COMPARISON FCN	DERIVATIVE 1	DERIVATIVE 2	DERIVATIVE 3
1	0.0000000000-01	0.0000000000-01	1.0000000000 00	-1 6502000000 00	0.0000000000-01	1.9803000000 02
2	5.6243436110-02	3.5768000000-02	9.4249000000-01	-1.5236000000 00	7.0830000000 00	-1.3293000000 02
3	9.2081406340-02	5.8456000000-02	9 0948000000-01	-1.3971000000 00	4 0671000000 00	-6.6448000000 01
4	1.2654961380-01	8 0138000000-02	8.8003000000-01	-1.3245000000 00	2.6264000000 00	1.2060000000 01
5	2.0247463140-01	1.2718000000-01	8.2085000000-01	-1.1876000000 00	3 1937000000 00	1.3868000000-02
6	3 3748758180-01	2 0721000000-01	7.3602000000-01	-9.3197000000-01	3 1948000000 00	-1.7265000000 00
7	4.9216633920-01	2 8602000000-01	6.7236000000-01	-6.8557000000-01	3 0587000000 00	-3.4465000000 00
8	8.4389045010-01	4 4623000000-01	5 9942000000-01	-2.3977000000-01	2.5066000000 00	6.8959000000-01
9	1 2655065170 00	5.7427000000-01	5 8950000000-01	8.6833000000-02	2 5949000000 00	5 2071000000 00
10	1.6874575560 00	6.5943000000-01	6.0685000000-01	3.2671000000-01	3.0383000000 00	1.0659000000 01
11	2.5316352140 00	7.6051000000-01	6.5722000000-01	6.8826000000-01	4 1157000000 00	2 4396000000 01
12	3.3750349000 00	8.1662000000-01	7.0303000000-01	9.5757000000-01	5.4845000000 00	2.6015000000 01
13	4.0469303930 00	8.4578000000-01	7.3340000000-01	1.1286000000 00	6.2432000000 00	3.4971000000 01
14	5.0605664840 00	8.7580000000-01	7.7026000000-01	1.3318000000 00	7.2931000000 00	6.2869000000 01
15	6.7524136760 00	9.0640000000-01	8.1471000000-01	1.5843000000 00	9 2165000000 00	3 4883000000 01
16	1.0135216960 01	9.3739000000-01	8.6841000000-01	1.8867000000 00	1.0298000000 01	-1.6446000000 02
17	INFINITE	1.0000000000 00	1.0000000000 00			

Table 3 - Contents of Retrieval File . . . (continued)

ATT ANGLE	CONSTANT	EXPONENT
NEAR FIELD	9.0000000000D 01	0.0000000000D-01
FAR FIELD	1.0007000000D 02	-5.0000000000D-01

POINT	LOAD	TAU	COMPARISON FCN	DERIVATIVE 1	DERIVATIVE 2	DERIVATIVE 3
1	0.0000000000D-01	0.0000000000D-01	1.0000000000D 00	-2.2698000000D 00	0.0000000000D-01	5.0412000000D 02
2	5.6243436110-02	3.5768000000-02	9.2266000000-01	-1.9473000000 00	1.8031000000 01	-4.9054000000 02
3	9.2081406340-02	5.8456000000-02	8.9216000000-01	-1.6645000000 00	6.9020000000 00	4.2378000000 01
4	1.2654961380-01	8.0138000000-02	8.4777000000-01	-1.5049000000 00	7.8208000000 00	-4.8412000000 01
5	2.0247463140-01	1.2718000000-01	7.8479000000-01	-1.1905000000 00	5.5436000000 00	-2.1033000000 01
6	3.3748759180-01	2.0721000000-01	7.0546000000-01	-8.1422000000-01	3.8601000000 00	-1.5182000000 01
7	4.8216633920-01	2.8602000000-01	6.5205000000-01	-5.5717000000-01	2.6638000000 00	-6.8634000000 00
8	8.4389045010-01	4.4623000000-01	5.9227000000-01	-2.1849000000-01	1.5642000000 00	9.3216000000-01
9	1.2655065170 00	5.7427000000-01	5.7744000000-01	-1.0573000000-02	1.6835000000 00	4.1808000000 00
10	1.6874575560 00	6.5943000000-01	5.8307000000-01	1.4796000000-01	2.0396000000 00	1.5715000000 01
11	2.5316352140 00	7.6051000000-01	6.1115000000-01	4.3440000000-01	3.6280000000 00	4.4005000000 01
12	3.3750349000 00	8.1662000000-01	6.4253000000-01	7.0720000000-01	6.0969000000 00	5.9916000000 01
13	4.0469303930 00	8.4578000000-01	6.6600000000-01	9.1050000000-01	7.9443000000 00	1.3540000000 02
14	5.0605664840 00	8.7580000000-01	6.9748000000-01	1.2070000000 00	1.1909000000 01	1.6682000000 02
15	6.7524136760 00	9.0640000000-01	7.4078000000-01	1.6494000000 00	1.7013000000 01	5.4840000000 02
16	1.0135216960 01	9.3739000000-01	8.0278000000-01	2.4400000000 00	3.4008000000 01	-5.4315000000 02
17	INFINITE	1.0000000000 00	1.0000000000 00			

TORQUE	CONSTANT	EXPONENT
NEAR FIELD	1.6463000000D 01	0.0000000000D-01
FAR FIELD	1.7306000000 01	5.0000000000D-01

POINT	LOAD	TAU	COMPARISON FCN	DERIVATIVE 1	DERIVATIVE 2	DERIVATIVE 3
1	0.0000000000D-01	0.0000000000D-01	1.0000000000D 00	1.2603000000D 00	0.0000000000D-01	-3.1207000000D 02
2	5.6243436110-02	3.5768000000-02	1.0427000000 00	1.0607000000 00	-1.1162000000 01	3.5255000000 02
3	9.2081406340-02	5.8456000000-02	1.0646000000 00	8.9819000000-01	-3.1636000000 00	-1.9538000000 01
4	1.2654961380-01	8.0138000000-02	1.0833000000 00	8.2500000000-01	-3.5872000000 00	2.1639000000 01
5	2.0247463140-01	1.2718000000-01	1.1185000000 00	6.8020000000-01	-2.5694000000 00	7.0205000000 00
6	3.3748759180-01	2.0721000000-01	1.1653000000 00	4.9704000000-01	-2.0075000000 00	5.1224000000 00
7	4.8216633920-01	2.8602000000-01	1.1987000000 00	3.5475000000-01	-1.6038000000 00	-9.9900000000-01
8	8.4389045010-01	4.4623000000-01	1.2342000000 00	8.4981000000-02	-1.7639000000 00	-9.9638000000-01
9	1.2655065170 00	5.7427000000-01	1.2303000000 00	-1.4904000000-01	-1.8914000000 00	-3.7706000000 00
10	1.6874575560 00	6.5943000000-01	1.2104000000 00	-3.2379000000-01	-2.2126000000 00	-6.9700000000 00
11	2.5316352140 00	7.6051000000-01	1.1651000000 00	-5.8304000000-01	-2.9171000000 00	5.6679000000 00
12	3.3750349000 00	8.1662000000-01	1.1280000000 00	-7.3778000000-01	-2.5991000000 00	4.7046000000 01
13	4.0469303930 00	8.4578000000-01	1.1056000000 00	-7.9358000000-01	-1.2270000000 00	-9.1263000000 01
14	5.0605664840 00	8.7580000000-01	1.0808000000 00	-8.7155000000-01	-3.9670000000 00	4.5428000000 02
15	6.7524136760 00	9.0640000000-01	1.0544000000 00	-7.8032000000-01	9.9308000000 00	-2.4352000000 02
16	1.0135216960 01	9.3739000000-01	1.0338000000 00	-5.8950000000-01	2.3839000000 00	-3.8074000000 01
17	INFINITE	1.0000000000 00	1.0000000000 00			

Table 3 - Contents of Retrieval File . . . (continued)

REQ FLOW	CONSTANT	EXPONENT
NEAR FIELD	4.7133000000D 00	0.0000000000D-01
FAR FIELD	4.0711000000D 00	0.0000000000D-01

POINT	LOAD	TAU	COMPARISON FCN	DERIVATIVE 1	DERIVATIVE 2	DERIVATIVE 3
1	0.0000000000D-01	0.0000000000D-01	1.0000000000D 00	7.7286000000D-02	0.0000000000D-01	-2.9511000000D 01
2	5.6243436110-02	3.5768000000-02	1.0025000000 00	5.8409000000-02	-1.0555000000 00	1.0540000000 01
3	9.2081406340-02	5.8456000000-02	1.0036000000 00	3.7173000000-02	-8.1640000000-01	2.6434000000 01
4	1.2654961380-01	8.0138000000-02	1.0043000000 00	2.5686000000-02	-2.4323000000-01	-2 2245000000 00
5	2.0247463140-01	1.2718000000-01	1.0052000000 00	1.1783000000-02	-3.4787000000-01	2 5114000000 00
6	3.3748758180-01	2.0721000000-01	1.0052000000 00	-8.0156000000-03	-1.4687000000-01	2.7507000000 00
7	4.8215633920-01	2.8602000000-01	1.0044000000 00	-1.1048000000-02	6.9898000000-02	-2.5357000000-01
8	8.4389045010-01	4.4623000000-01	1.0033000000 00	-3.1042000000-03	2.9274000000-02	4.7336000000-01
9	1.2655065170 00	5.7427000000-01	1.0033000000 00	4.5244000000-03	8.9884000000-02	-9.1681000000-01
10	1.6874575560 00	6.5943000000-01	1.0039000000 00	8.8545000000-03	1.1804000000-02	3 8665000000-01
11	2.5316352140 00	7.6051000000-01	1.0050000000 00	1.2023000000-02	5.0886000000-02	3.5435000000-01
12	3.3750349000 00	8.1662000000-01	1.0057000000 00	1.5435000000-02	7.0766000000-02	-2.0676000000 01
13	4.0469303930 00	8.4578000000-01	1.0061000000 00	8.7061000000-03	-5.3224000000-01	1.7294000000 01
14	5.0605664840 00	8.7580000000-01	1.0062000000 00	5.2080000000-04	-1.3025000000-02	-3.9162000000 01
15	6.7524136760 00	9.0640000000-01	1.0060000000 00	-1 8204000000-02	-1 2111000000 00	2.4203000000 00
16	1.0135216960 01	9.3739000000-01	1.0049000000 00	-5.4574000000-02	-1 1361000000 00	1.8145000000 01
17	INFINITE	1.0000000000 00	1.0000000000 00			

FLOW LOSS	CONSTANT	EXPONENT
NEAR FIELD	1.4902000000D 00	1.0000000000D 00
FAR FIELD	1.6170000000D 00	0.0000000000D-01

POINT	LOAD	TAU	COMPARISON FCN	DERIVATIVE 1	DERIVATIVE 2	DERIVATIVE 3
1	0.0000000000D-01	0.0000000000D-01	1.0000000000D 00	-1 5480000000D 00	0.0000000000D-01	1.2753000000D 02
2	5.6243436110-02	3.5768000000-02	9.4560000000-01	-1.4665000000 00	4 5616000000 00	-1.1867000000 02
3	9.2081406340-02	5 8456000000-02	9.1327000000-01	-1.3935000000 00	1.8691000000 00	7 3618000000 01
4	1.2654961380-01	8.0138000000-02	8.8362000000-01	-1.3357000000 00	3 4653000000 00	-1.6203000000 01
5	2.0247463140-01	1.2718000000-01	8.2435000000-01	-1.1906000000 00	2 7032000000 00	7 3566000000 00
6	3.3748758180-01	2.0721000000-01	7.3836000000-01	-9 5004000000-01	3.3080000000 00	-4.6527000000 00
7	4.8216633920-01	2.8602000000-01	6.7339000000-01	-7 0381000000-01	2.9413000000 00	-2.4167000000 00
8	8.4389045010-01	4.4623000000-01	5 9672000000-01	-2 6360000000-01	2 5541000000 00	7.0220000000-01
9	1.2655065170 00	5.7427000000-01	5.8415000000-01	6.9196000000-02	2.6441000000 00	4 6007000000 00
10	1.6874575560 00	6.5943000000-01	6.0011000000-01	3 1106000000-01	3 0359000000 00	1.1362000000 01
11	2.5316352140 00	7.6051000000-01	6.4901000000-01	6 7596000000-01	4 1843000000 00	3 1211000000 01
12	3.3750349000 00	8.1662000000-01	6.9444000000-01	9 5984000000-01	5.9354000000 00	-7 6428000000 00
13	4.0469303930 00	8.4578000000-01	7.2493000000-01	1 1297000000 00	5 7123000000 00	5 4438000000 01
14	5.0605664840 00	8.7580000000-01	7.6166000000-01	1 3257000000 00	7 3467000000 00	1.2255000000 01
15	6.7524136760 00	9.0640000000-01	8.0572000000-01	1 5562000000 00	7 7216000000 00	2.6260000000 02
16	1.0135216960 01	9.3739000000-01	8 5896000000-01	1 9216000000 00	1 5860000000 01	-2 5330000000 02
17	INFINITE	1.0000000000 00	1.0000000000 00			

Table 3 - Contents of Retrieval File . . . (continued)

K-XX	CONSTANT	EXPONENT
NEAR FIELD	-5.5102000000D-01	1.0000000000D 00
FAR FIELD	9.0173000000D-01	2.5000000000D 00

POINT	LOAD	TAU	COMPARISON FCN	DERIVATIVE 1	DERIVATIVE 2	DERIVATIVE 3
1	0.0000000000D-01	0.0000000000D-01	-1.0000000000D 00	2.4323000000D 00	0.0000000000D-01	7.1487000000D 02
2	5.6243436110-02	3.5768000000-02	-9.0755000000-01	2.8896000000D 00	2.5569000000D 01	-9.1419000000D 02
3	9.2081406340-02	5.8456000000-02	-8.3719000000-01	3.2344000000D 00	4.8283000000D 00	5.0437000000D 02
4	1.2654961380-01	8.0138000000-02	-7.6507000000-01	3.4576000000D 00	1.5764000000D 01	-2.2806000000D 02
5	2.0247463140-01	1.2718000000-01	-5.8893000000-01	3.9469000000D 00	5.0357000000D 00	-2.7454000000D 00
6	3.3748758180-01	2.0721000000-01	-2.5717000000-01	4.3411000000D 00	4.8160000000D 00	-2.0724000000D 02
7	4.8216633920-01	2.8602000000-01	8.3000000000-02	4.0770000000D 00	-1.1517000000D 01	5.9633000000D 01
8	8.4389045010-01	4.4623000000-01	6.2925000000-01	2.9972000000D 00	-1.9630000000D 00	-1.1046000000D 02
9	1.2655065170 00	5.7427000000-01	9.5828000000-01	1.8404000000D 00	-1.6106000000D 01	1.0971000000D 02
10	1.6874575560 00	6.5943000000-01	1.0679000000 00	8.6662000000-01	-6.7639000000D 00	-6.0643000000D 00
11	2.5316352140 00	7.6051000000-01	1.1199000000 00	1.5194000000-01	-7.3769000000D 00	-4.4883000000-01
12	3.3750349000 00	9.1662000000-01	1.1168000000 00	-2.6268000000-01	-7.4020000000D 00	4.8558000000D 02
13	4.0469303930 00	8.4578000000-01	1.1080000000 00	-2.7207000000-01	6.7576000000 00	-6.3813000000D 02
14	5.0605664840 00	8.7580000000-01	1.1000000000 00	-3.5675000000-01	-1.2399000000D 01	3.6049000000D 02
15	6.7524136760 00	9.0640000000-01	1.0850000000 00	-5.6738000000-01	-1.3678000000D 00	-3.5481000000D 02
16	1.0135216960 01	9.3739000000-01	1.0650000000 00	-7.8015000000-01	-1.2363000000D 01	1.9747000000D 02
17	INFINITE	1.0000000000 00	1.0000000000 00			

B-XX	CONSTANT	EXPONENT
NEAR FIELD	2.0058000000 00	0.0000000000-01
FAR FIELD	1.4450000000 01	1.5000000000 00

POINT	LOAD	TAU	COMPARISON FCN	DERIVATIVE 1	DERIVATIVE 2	DERIVATIVE 3
1	0.0000000000D-01	0.0000000000D-01	1.0000000000 00	-1.8609000000 00	0.0000000000D-01	-9.6880000000D 02
2	5.6243436110-02	3.5768000000-02	9.2605000000-01	-2.4806000000D 00	-3.4652000000D 01	2.2807000000D 03
3	9.2081406340-02	5.8456000000-02	8.6529000000-01	-2.6798000000D 00	1.7092000000D 01	-1.9040000000D 02
4	1.2654961380-01	8.0138000000-02	8.1088000000-01	-2.3540000000D 00	1.2964000000D 01	2.1440000000D 01
5	2.0247463140-01	1.2718000000-01	7.1486000000-01	-1.7204000000D 00	1.3973000000D 01	-7.1428000000D 01
6	3.3748758180-01	2.0721000000-01	6.1582000000-01	-8.3091000000-01	8.2564000000D 00	-7.3256000000D 01
7	4.8216633920-01	2.8602000000-01	5.7000000000-01	-4.0772000000-01	2.4831000000D 00	-1.1667000000D 01
8	8.4389045010-01	4.4623000000-01	5.2855000000-01	-1.5964000000-01	6.1388000000-01	1.0713000000D 01
9	1.2655065170 00	5.7427000000-01	5.1689000000-01	6.7780000000-03	1.9855000000D 00	-1.7847000000D 01
10	1.6874575560 00	6.5943000000-01	5.2283000000-01	1.1115000000-01	4.6571000000-01	3.7505000000D 01
11	2.5316352140 00	7.6051000000-01	5.4290000000-01	3.4982000000-01	4.2567000000D 00	-4.0585000000D 00
12	3.3750349000 00	8.1662000000-01	5.6911000000-01	5.8228000000-01	4.0290000000D 00	5.2698000000D 02
13	4.0469303930 00	8.4578000000-01	5.8998000000-01	9.2381000000-01	1.9396000000D 01	1.2142000000D 02
14	5.0605664840 00	8.7580000000-01	6.2700000000-01	1.5608000000 00	2.3041000000D 01	3.0426000000D 02
15	6.7524136760 00	9.0640000000-01	6.8700000000-01	2.4083000000D 00	3.2351000000D 01	-4.3686000000D 02
16	1.0135216960 01	9.3739000000-01	7.7500000000-01	3.2011000000D 00	1.8813000000D 01	-3.0047000000D 02
17	INFINITE	1.0000000000 00	1.0000000000 00			

Table 3 - Contents of Retrieval File . . . (continued)

K-X'

	CONSTANT	EXPONENT
NEAR FIELD	1.0028000000D 00	0.0000000000D-01
FAR FIELD	2.4336000000D 00	2.0000000000D 00

POINT	LOAD	TAU	COMPARISON FCN	DERIVATIVE 1	DERIVATIVE 2	DERIVATIVE 3
1	0.0000000000D-01	0.0000000000D-01	1.0000000000D 00	2.5245000000D-01	0.0000000000D-01	6.9107000000D 02
2	5.6243436110-02	3.5768000000D-02	1.0143000000D 00	6.9450000000D-01	2.4718000000D 01	-3.6921000000D 02
3	9.2081406340-02	5.8456000000D-02	1.0357000000D 00	1.1603000000D 00	1.6341000000D 01	-1.1674000000D 02
4	1.2654961380-01	8.0138000000D-02	1.0645000000D 00	1.4872000000D 00	1.3810000000D 01	-1.4059000000D 02
5	2.0247463140-01	1.2718000000D-01	1.1473000000D 00	1.9813000000D 00	7.1964000000D 00	-1.6511000000D 02
6	3.3748758180-01	2.0721000000D-01	1.3148000000D 00	2.0284000000D 00	-6.0173000000D 00	-7.0334000000D 00
7	4.8216633920-01	2.8602000000D-01	1.4554000000D 00	1.5324000000D 00	-6.5716000000D 00	-2.4457000000D 01
8	8.4389045010-01	4.4623000000D-01	1.5998000000D 00	1.6564000000D-01	-1.0490000000D 01	3.9955000000D 01
9	1.2655065170 00	5.7427000000D-01	1.5490000000D 00	-8.4997000000D-01	-5.3741000000D 00	1.6620000000D 00
10	1.6874575560 00	6.5943000000D-01	1.4573000000D 00	-1.3016000000D 00	-5.2326000000D 00	5.4599000000D 01
11	2.5316352140 00	7.6051000000D-01	1.3084000000D 00	-1.5516000000D 00	2.8626000000D-01	-3.7039000000D 01
12	3.3750349000 00	8.1662000000D-01	1.2207000000D 00	-1.5938000000D 00	-1.7920000000D 00	8.1851000000D 01
13	4.0469303930 00	8.4578000000D-01	1.1738000000D 00	-1.6113000000D 00	5.9479000000D-01	2.8899000000D 02
14	5.0605664840 00	8.7580000000D-01	1.1270000000D 00	-1.4632000000D 00	9.2704000000D 00	-1.1846000000D 02
15	6.7524136760 00	9.0640000000D-01	1.0860000000D 00	-1.2350000000D 00	5.6455000000D 00	1.1328000000D 02
16	1.0135216960 01	9.3739000000D-01	1.0510000000D 00	-1.0057000000D 00	9.1561000000D 00	-1.4624000000D 02
17	INFINITE	1.0000000000D 00	1.0000000000D 00			

B-XY

	CONSTANT	EXPONENT
NEAR FIELD	5.0960000000D 00	1.0000000000D 00
FAR FIELD	4.3765000000D 00	1.5000000000D 00

POINT	LOAD	TAU	COMPARISON FCN	DERIVATIVE 1	DERIVATIVE 2	DERIVATIVE 3
1	0.0000000000D-01	0.0000000000D-01	1.0000000000D 00	5.0622000000D-01	0.0000000000D-01	2.4828000000D 02
2	5.6243436110-02	3.5768000000D-02	1.0200000000D 00	6.6504000000D-01	8.8804000000D 00	-6.0311000000D 02
3	9.2081406340-02	5.8456000000D-02	1.0362000000D 00	7.1129000000D-01	-4.8030000000D 00	2.9832000000D 02
4	1.2654961380-01	8.0138000000D-02	1.0510000000D 00	6.7727000000D-01	1.6652000000D 00	-4.6267000000D 01
5	2.0247463140-01	1.2718000000D-01	1.0839000000D 00	7.0441000000D-01	-5.1129000000D-01	-2.1501000000D 01
6	3.3748758180-01	2.0721000000D-01	1.1368000000D 00	5.9464000000D-01	-2.2320000000D 00	3.2866000000D 00
7	4.8216633920-01	2.8602000000D-01	1.1770000000D 00	4.2894000000D-01	-1.9730000000D 00	-5.9810000000D 00
8	8.4389045010-01	4.4623000000D-01	1.2163000000D 00	3.6082000000D-02	-2.9312000000D 00	6.0249000000D 00
9	1.2655065170 00	5.7427000000D-01	1.1990000000D 00	-2.8985000000D-01	-2.1598000000D 00	2.2492000000D 01
10	1.6874575560 00	6.5943000000D-01	1.1688000000D 00	-3.9222000000D-01	-2.4440000000D-01	5.4648000000D-01
11	2.5316352140 00	7.6051000000D-01	1.1280000000D 00	-4.1413000000D-01	-1.8916000000D-01	-2.9390000000D 01
12	3.3750349000 00	8.1662000000D-01	1.1036000000D 00	-4.7101000000D-01	-1.8382000000D 00	1.0071000000D 02
13	4.0469303930 00	8.4578000000D-01	1.0895000000D 00	-4.8179000000D-01	1.0986000000D 00	-3.3966000000D 02
14	5.0605664840 00	8.7580000000D-01	1.0740000000D 00	-6.0187000000D-01	-9.0980000000D 00	5.6050000000D 02
15	6.7524136760 00	9.0640000000D-01	1.0540000000D 00	-6.1785000000D-01	8.0533000000D 00	-3.4674000000D 02
16	1.0135216960 01	9.3739000000D-01	1.0370000000D 00	-5.3478000000D-01	-2.6920000000D 00	4.2997000000D 01
17	INFINITE	1.0000000000D 00	1.0000000000D 00			

Table 3 - Contents of Retrieval File . . . (continued)

K-YX

	CONSTANT	EXPONENT
NEAR FIELD	-2.279900000D 00	0.0000000000D-01
FAR FIELD	2.2460000000D-01	2.5000000000D 00

POINT	LOAD	TAU	COMPARISON FCN	DERIVATIVE 1	DERIVATIVE 2	DERIVATIVE 3
1	0.0000000000D-01	0.0000000000D-01	-1.0000000000D 00	8.0513000000D-01	0.0000000000D-01	-3.2357000000D 02
2	5.6243436110-02	3.5768000000D-02	-9.7367000000D-01	5.9815000000D-01	-1.1573000000D 01	-1.7063000000D 02
3	9.2081406340-02	5.8456000000D-02	-9.6341000000D-01	2.9166000000D-01	-1.5445000000D 01	1.4284000000D 03
4	1.2654961380-01	8.0138000000D-02	-9.5829000000D-01	2.9254000000D-01	1.5526000000D 01	-6.0409000000D 02
5	2.0247463140-01	1.2718000000D-01	-9.3783000000D-01	3.5451000000D-01	-1.2892000000D 01	2.3308000000D 02
6	3.3748758180-01	2.0721000000D-01	-9.3083000000D-01	6.9231000000D-02	5.7622000000D 00	-1.0444000000D 02
7	4.8216633920-01	2.8602000000D-01	-9.1600000000D-01	1.9900000000D-01	-2.4689000000D 00	9.5282000000D 01
8	8.4389045010-01	4.4623000000D-01	-8.5050000000D-01	1.0263000000D 00	1.2796000000D 01	-2.4658000000D 01
9	1.2655065170 00	5.7427000000D-01	-6.2283000000D-01	2.4626000000D 00	9.6391000000D 00	2.2912000000D 02
10	1.6874575560 00	6.5943000000D-01	-3.5458000000D-01	4.1143000000D 00	2.9151000000D 01	-8.5809000000D 01
11	2.5316352140 00	7.6051000000D-01	1.9544000000D-01	6.6225000000D 00	2.0477000000D 01	1.0861000000D 02
12	3.3750349000 00	8.1662000000D-01	6.0246000000D-01	7.9424000000D 00	2.6572000000D 01	-7.5738000000D 03
13	4.0469303930 00	8.4578000000D-01	8.1406000000D-01	5.4972000000D 00	-1.9428000000D 02	5.2019000000D 03
14	5.0605664340 00	8.7580000000D-01	9.1500000000D-01	2.0089000000D 00	-3.8119000000D 01	2.8757000000D 02
15	6.7524136760 00	9.0640000000D-01	9.6000000000D-01	9.7712000000D-01	-2.9319000000D 01	7.6561000000D 02
16	1.0135216960 01	9.3739000000D-01	9.8000000000D-01	4.3616000000D-01	-5.5929000000D 00	8.9329000000D 01
17	INFINITE	1.0000000000 00	1.0000000000 00			

B-YX

	CONSTANT	EXPONENT
NEAR FIELD	5.0960000000 00	1.0000000000 00
FAR FIELD	4.3765000000 00	1.5000000000 00

POINT	LOAD	TAU	COMPARISON FCN	DERIVATIVE 1	DERIVATIVE 2	DERIVATIVE 3
1	0.0000000000D-01	0.0000000000D-01	1.0000000000 00	5.0622000000D-01	0.0000000000D-01	2.4828000000D 02
2	5.6243436110-02	3.5768000000D-02	1.0200000000 00	6.6504000000D-01	8.8804000000D 00	-6.0311000000D 02
3	9.2081406340-02	5.8456000000D-02	1.0362000000 00	7.1129000000D-01	-4.8030000000D 00	2.9832000000D 02
4	1.2654961380-01	8.0138000000D-02	1.0510000000 00	6.7727000000D-01	1.6652000000D 00	-4.6267000000D 01
5	2.0247463140-01	1.2718000000D-01	1.0839000000 00	7.0441000000D-01	-5.1129000000D-01	-2.1501000000D 01
6	3.3748758180-01	2.0721000000D-01	1.1368000000 00	5.9464000000D-01	-2.2320000000D 00	3.2866000000D 00
7	4.8216633920-01	2.8602000000D-01	1.1770000000 00	4.2894000000D-01	-1.9730000000D 00	-5.9810000000D 00
8	8.4389045010-01	4.4623000000D-01	1.2163000000 00	3.6082000000D-02	-2.9312000000D 00	6.0249000000D 00
9	1.2655065170 00	5.7427000000D-01	1.1990000000 00	-2.8985000000D-01	-2.1598000000D 00	2.2492000000D 01
10	1.6874575560 00	6.5943000000D-01	1.1688000000 00	-3.9222000000D-01	-2.4440000000D-01	5.4648000000D-01
11	2.5316352140 00	7.6051000000D-01	1.1280000000 00	-4.1413000000D-01	-1.8916000000D-01	-2.9390000000D 01
12	3.3750349000 00	8.1662000000D-01	1.1036000000 00	-4.7101000000D-01	-1.8382000000D 00	1.0071000000D 02
13	4.0469303930 00	8.4578000000D-01	1.0895000000 00	-4.8179000000D-01	1.0986000000D 00	-3.3966000000D 02
14	5.0605664840 00	8.7580000000D-01	1.0740000000 00	-6.0187000000D-01	-9.0980000000D 00	5.6050000000D 02
15	6.7524136760 00	9.0640000000D-01	1.0540000000 00	-6.1785000000D-01	8.0533000000D 00	-3.4674000000D 02
16	1.0135216960 01	9.3739000000D-01	1.0370000000 00	-5.3478000000D-01	-2.6920000000D 00	4.2997000000D 01
17	INFINITE	1.0000000000 00	1.0000000000 00			

Table 3 - Contents of Retrieval File . . . (continued)

K-YY	CONSTANT	EXPONENT
NEAR FIELD	4.7203000000D 00	1.0000000000D 00
FAR FIELD	3.4007000000D 00	1.5000000000D 00

POINT	LOAD	TAU	COMPARISON FCN	DERIVATIVE 1	DERIVATIVE 2	DERIVATIVE 3
1	0.0000000000D-01	0.0000000000D-01	1.0000000000D 00	5.9625000000D-01	0.0000000000D-01	1.1453000000D 02
2	5.6243436110-02	3.5768000000-02	1.0222000000 00	6.6951000000-01	4.0965000000 00	-7.9330000000 02
3	9.2081406340-02	5.8456000000-02	1.0369000000 00	5.5827000000-01	-1.3902000000 01	7.4359000000 02
4	1.2654961380-01	8.0138000000-02	1.0470000000 00	4.3164000000-01	2.2205000000 00	-1.3037000000 02
5	2.0247463140-01	1.2718000000-01	1.0675000000 00	3.9184000000-01	-3.9123000000 00	2.8910000000 01
6	3.3748758180-01	2.0721000000-01	1.0888000000 00	1.7132000000-01	-1.5987000000 00	8.1280000000 00
7	4.8216633920-01	2.8602000000-01	1.0980000000 00	7.0568000000-02	-9.5811000000-01	-7.3096000000 00
8	8.4389045010-01	4.4623000000-01	1.0920000000 00	-1.7674000000-01	-2.1292000000 00	2.2246000000 01
9	1.2655065170 00	5.7427000000-01	1.0597000000 00	-2.6701000000-01	7.1921000000-01	-5.9939000000 01
10	1.6874575560 00	6.5943000000-01	1.0334000000 00	-4.2310000000-01	-4.3852000000 00	6.8378000000 01
11	2.5316352140 00	7.4051000000-01	9.8000000000-01	-5.1705000000-01	2.5265000000 00	-6.8461000000 01
12	3.3750349000 00	8.1662000000-01	9.5295000000-01	-4.8305000000-01	-1.3149000000 00	4.4644000000 02
13	4.0469303930 00	8.4578000000-01	9.4015000000-01	-3.3159000000-01	1.1703000000 01	-3.2582000000 02
14	5.0605664840 00	8.7580000000-01	9.3400000000-01	-1.2707000000-01	1.9221000000 00	4.1642000000 02
15	6.7524136760 00	9.0640000000-01	9.3300000000-01	1.2670000000-01	1.4664000000 01	6.4106000000 00
16	1.0135216960 01	9.3739000000-01	9.4400000000-01	5.8423000000-01	1.4863000000 01	-2.3739000000 02
17	INFINITE	1.0000000000 00	1.0000000000 00			

B-YY	CONSTANT	EXPONENT
NEAR FIELD	4.5143000000 00	0.0000000000-01
FAR FIELD	7.0281000000 00	1.0000000000 00

POINT	LOAD	TAU	COMPARISON FCN	DERIVATIVE 1	DERIVATIVE 2	DERIVATIVE 3
1	0.0000000000D-01	0.0000000000D-01	1.0000000000D 00	-2.7314000000D 00	0.0000000000D-01	6.6960000000D 02
2	5.6243436110-02	3.5768000000-02	9.0741000000-01	-2.3031000000D 00	2.3950000000D 01	-4.6342000000D 02
3	9.2081406340-02	5.8456000000-02	8.6042000000-01	-1.8790000000D 00	1.3436000000D 01	-1.5225000000D 02
4	1.2654961380-01	8.0138000000-02	8.2258000000-01	-1.6234000000D 00	1.0135000000D 01	-1.9908000000D 01
5	2.0247463140-01	1.2718000000-01	7.5709000000-01	-1.1687000000D 00	9.1987000000D 00	-7.0346000000D 01
6	3.3748758180-01	2.0721000000-01	6.8700000000-01	-6.5777000000-01	3.5690000000D 00	-8.1482000000D 00
7	4.8216633920-01	2.8602000000-01	6.4558000000-01	-4.0180000000-01	2.9268000000D 00	-9.8761000000D 00
8	8.4389045010-01	4.4623000000-01	6.1200000000-01	-5.9646000000-02	1.3445000000D 00	-4.3285000000D 00
9	1.2655065170 00	5.7427000000-01	6.1387000000-01	7.7029000000-02	7.9033000000-01	-9.4781000000D 00
10	1.6874575560 00	6.5943000000-01	6.2232000000-01	1.0996000000-01	-1.6820000000-02	4.7353000000D 01
11	2.5316352140 00	7.4051000000-01	6.4150000000-01	3.5017000000-01	4.7696000000D 00	-1.0745000000D 01
12	3.3750349000 00	8.1662000000-01	6.6834000000-01	6.0088000000-01	4.1667000000 00	3.5252000000D 02
13	4.0469303930 00	8.4578000000-01	6.8909000000-01	8.7226000000-01	1.4446000000D 01	-3.9581000000D 02
14	5.0605664840 00	8.7580000000-01	7.2000000000-01	1.1276000000D 00	2.5641000000D 00	-3.5695000000D 02
15	6.7524136760 00	9.0640000000-01	7.5400000000-01	1.0389000000D 00	-8.3584000000D 00	2.3823000000D 03
16	1.0135216960 01	9.3739000000-01	7.9400000000-01	1.9239000000D 00	6.5469000000D 01	-1.0457000000D 03
17	INFINITE	1.0000000000 00	1.0000000000 00			

SECTION IV

FOUNDATIONS OF THE STORAGE RETRIEVAL METHOD

4.1 Choice of the Operating Parameter

The state of static equilibrium of a fluid film journal bearing may be specified either in terms of a static load vector or a static displacement vector. Traditionally, the bearing designer tends to work with the displacement vector not only because the eccentricity ratio is an easy to use design parameter in bearing analysis but also because the bearing designer is concerned with the minimum film thickness which is directly related to the eccentricity ratio. A rotor dynamicist, on the other hand, starts with a known bearing design. Furthermore, the static load condition is usually known.* Therefore; the load parameter, as readily computed according to Eq. (2), is the natural choice to define the data point in the table.

The complete range of the load parameter should span from zero to infinity. Obviously it is not possible to treat unbounded numbers in a data table. As a practical matter, some arbitrary cutoff point is accepted when a table is being prepared. At the time of data retrieval, if the requested data point should lie outside the available data range, a judicial extrapolation procedure must be used. The most commonly used extrapolation procedure is the power law, which amounts to a straight line extension of a log-log plot. The desired retrieval method requires the inclusion of such an extrapolation procedure which also retains overall smoothness within the data range.

The graphical extrapolation process can be emulated by a computer program. The power law extrapolation for an infinitesimal load can be expressed as

*The new rotor dynamics software [9] has a feature to calculate the load vector of each bearing.

$$\bar{Z} = a\bar{W}^{s_1} \qquad \text{for} \qquad \bar{W}<<1 \tag{48}$$

Its log differential form is

$$\frac{d\bar{Z}}{\bar{Z}} = s_1 \frac{d\bar{W}}{\bar{W}}$$

Or,

$$s_1 = \frac{d\bar{Z}}{d\bar{W}} \frac{\bar{W}}{\bar{Z}} \qquad \text{for} \qquad \bar{W}<<1 \tag{49}$$

With the differentials replaced by finite differences and $(\bar{W}, \bar{Z})$ approximated by average values, Eq. (49) can be used to calculate s_1 from two data points corresponding to the smallest values of $\bar{W}$ in the data table.

Similarly, the power law extrapolation for the load parameter tending to infinity is

$$\bar{Z} = b\bar{W}^{s_2} \qquad \text{for} \qquad \bar{W}>>1 \tag{50}$$

Or,

$$s_2 = \frac{d\bar{Z}}{d\bar{W}} \frac{\bar{W}}{\bar{Z}} \qquad \text{for} \qquad \bar{W}>>1 \tag{51}$$

s_2 can thus be calculated with the two data points which represent the largest values of $\bar{W}$ in the data table.

The values of s_1 and s_2 as computed numerically can have either sign and certainly may not always be integers. As illustrated in the π-film short bearing analysis, the factor $(1-\varepsilon^2)^{-1/2}$ shows up prominently in various coefficients. Therefore, the values of s_1 and s_2 are rounded off to the nearest half-integer.

Upon fixing s_1 and s_2, the near-field and far-field data behavior can be more accurately represented by

$$\lim_{\bar{W}\to 0} \bar{Z} = \bar{W}^{s_1}\{a_o + a_1\bar{W} + a_2\bar{W}^2\} \tag{52}$$

$$\lim_{\bar{W}\to \infty} \bar{Z} = \bar{W}^{s_1}\{b_o + b_1\bar{W}^{-1} + b_2\bar{W}^{-2}\} \tag{53}$$

and the coefficients a_o and b_o, respectively, can be determined numerically from three consecutive data points in each end of the data table. The other coefficients (a_1, a_2, b_1, b_2) are not explicitly required to define the extreme field asymptotes which are

$$\lim_{\bar{W}\to 0} \bar{Z} = a_o\bar{W}^{s_1}; \quad \lim_{\bar{W}\to \infty} \bar{Z} = b_o\bar{W}^{s_2} \tag{54}$$

4.2 Full Range Interpolation

An important requirement for a foolproof full range interpolation procedure is to conform to the asymptotic properties uniformly in both the near field and in the far field. This very stringent requirement is satisfied by comparing the data point with a reference function $\bar{Z}_o$ which has the following properties:

(1) $$\lim_{\bar{W}\to 0} \frac{|\bar{Z}|}{Z_o} = 1 \tag{55}$$

(2) $$\lim_{\bar{W}\to \infty} \frac{|\bar{Z}|}{Z_o} = 1 \tag{56}$$

(3) $\bar{Z}_o$ $(0<W<\infty)>0$ and is bounded. (57)

Many simple functions can be concocted to satisfy these conditions for a specific combination of s_1 and s_2. After some experimentation, the reference function is chosen to have one of three forms depending on the relative values of s_1 and s_2:

(a) $s_1 > s_2$ then

$$\overline{Z}_o = \frac{|a_o b_o| \overline{W}^{s_1 + s_2} (1 + \overline{W})}{|a_o| \overline{W}^{s_1 + 1} + |b_o| \overline{W}^{s_2}} \tag{58a}$$

(b) $s_2 - 1 < s_1 \leq s_2$ then

$$\overline{Z}_o = \frac{|a_o| \overline{W}^{s_1} + |b_o| \overline{W}^{s_2 + 1}}{1 + \overline{W}} \tag{58b}$$

(c) $s_2 - 1 \geq s_1$ then

$$\overline{Z}_o = |a_o| \overline{W}^{s_1} + |b_o| \overline{W}^{s_2} \tag{58c}$$

The interpolation operation is then to be performed on the comparison function, which is simply the ratio between the data point and the reference function at the same value of the load parameter; i.e.

$$\overline{Z}_c(\overline{W}) = \overline{Z}(W)/\overline{Z}_o(\overline{W}) \tag{59}$$

The near-field and far-field values of the comparison function are simply

$$Z_c(W \to 0) = sg\{a_o\}; \qquad Z_c(W \to \infty) = sg\{b_o\} \tag{60}$$

$\overline{Z}_c$ is bounded for all values of $\overline{W}$. Since $\overline{Z}_o$ is everywhere smooth, smooth-

ness, or the lack of it, in the data would be directly reflected by the comparison function. Because $\overline{Z}_c$ has a limited range, its maximum magnitude is usually near unity; its smoothness can be readily verified. Examination of $\overline{Z}_c$ is thus a very effective way to discover inaccuracy in the data table. Furthe. discussion of this question will be pursued in Section 4.4.

Obtaining a $\overline{Z}_c\ (\overline{W})$ at discrete points of $\overline{W}$, interpolation can still be problematic if the desired value of $\overline{W}$ exceeds the largest data point. This difficulty is overcome by mapping the semi-infinite range of the load parameter into a finite domain of a working parameter. To assure one-to-one transformation between the load parameter and the working parameter, a monotonic differential relationship is desired. The selected transformation is

$$\tau = \frac{2}{\pi} \tan^{-1}(\overline{W}) \tag{61}$$

The inverse transformation is

$$\overline{W} = \tan(\frac{\pi}{2} \tau) \tag{62}$$

Differentiation of Eq. (61) yields

$$\frac{d\tau}{d\overline{W}} = \frac{(2/\pi)}{1 + (\overline{W})^2} \tag{63}$$

which is always positive and bounded. One may again note the near-field and far-field asymptotes of Eq. (61)

$$\lim_{\overline{W}\to 0} \tau = \frac{2}{\pi} \overline{W} \ ; \qquad \lim_{\overline{W}\to\infty} \tau = 1 - \frac{1}{(\pi/2)\overline{W}} \tag{54}$$

These simple relationships allow one to examine the data points in <u>all</u> ranges of $\overline{W}$.

With the aid of Eq. (62), the comparison function can now be described in the domain $0 \leq \tau \leq 1$. $\bar{Z}_c(\tau)$ is in fact assured to be bounded and smooth. Established numerical interpolation schemes can be readily implemented on it. The selected approach is the third order spline function [9], which represents $\bar{Z}_c(\tau_i \leq \tau \leq \tau_{i+1})$ as

$$\bar{Z}_c = \bar{Z}_c(\tau_i) + a_i(\tau - \tau_i) + \frac{1}{2} b_i(\tau - \tau_i)^2 + \frac{1}{6} c_i(\tau - \tau_i)^3$$

i spans 1 to N if the full range is divided into N intervals (which may not be uniform). There is some flexibility in the choice of the coefficients at each of the end points where one free condition can be specified. The common convention is to let the outboard second derivative vanish at each end; i.e.

$$b_1 = 0; \quad \text{and } b_N + (\tau_{N+1} - \tau_N)c_N = 0$$

Sometimes, if justified by other arguments, one can elect to null the first derivative at either end; i.e.,

$$a_1 = 0; \text{ or } a_N + (\tau_{N+1} - \tau_N)b_N + \frac{1}{2}(\tau_{N+1} - \tau_N)^2 c_N = 0$$

4.3 Correction for L/D Variation

The length to diameter ratio is a major configuration parameter in the design of a fluid film bearing. Typically, in industrial practice, it is in the range of 0.4 - 0.75; occasionally it may be less than 0.25. Unfortunately, there is no standardization of its value. If the data bank were to include a range of L/D, its total storage requirement would be very large indeed. It is, therefore, useful to develop an approach to correct any deviation in the value of (L/D) from that of an available data table.

The short bearing analysis described in Appendix B contains a scaling law which is applicable to the dimensionless load as well as the dimensionless dynamic coefficients:

$$\overline{W};\quad \overline{K}_{xx},\ \text{etc.};\quad \overline{B}_{xx},\ \text{etc.}\quad \sim \left(\frac{L}{D}\right)^2 \tag{66}$$

For the plain journal bearing, Lund [12] showed that this scaling yields reasonable results even for L/D = 1.0 for modest eccentricity ratios (up to about 0.3). It is also clear that such a scaling law would become increasingly unsatisfactory as L/D becomes very large since all such coefficients remain finite for an infinitely long bearing. To improve the situation one requires the scaling factor to assume a finite asymptote as $L/D \to \infty$ and that a load level dependence be suitably included. A scaling factor which possesses these two properties can be derived by comparing the "half Sommerfeld" solution with the short bearing solution. The "half Sommerfeld" solution is described in Appendix C.

Suppose the scaling factor is defined as

$$\Sigma = \overline{W}/\overline{W}_{sh} \tag{67}$$

$\overline{W}$ is the dimensionless load of any L/D and

$$\overline{W}_{sh} = \lim_{L/D \to 0} \frac{\overline{W}}{(L/D)^2} \tag{68}$$

The requirements indicated previously are satisfied if Σ is to be dependent on both L/D and $\overline{W}$. Thus

$$\Sigma = \Sigma\ (L/D,\ \overline{W});$$

and

$$\lim_{L/D \to 0} \Sigma = (L/D)^2$$

$$\lim_{L/D \to \infty} \Sigma = \Sigma_\infty < \infty \tag{69}$$

An empirical formula which is consistent with these conditions is

$$\Sigma = \frac{3}{\alpha^2}\left[1 - \frac{\tanh(\alpha L/D)}{\alpha(L/D)}\right] \tag{70}$$

It is seen that

$$\lim_{L/D\to\infty} \quad \Sigma = \Sigma_\infty = \frac{3}{\alpha^2} \tag{71}$$

One can compute, with the aid of $\overline{W}_{sh}$ and $\overline{W}_\infty$ derived in Appendices B and C,

$$\alpha = \sqrt{\frac{3\overline{W}_{sh}}{\overline{W}_\infty}}$$

$$= \sqrt{\frac{(2+\varepsilon^2)}{2(1-\varepsilon^2)}} \sqrt{\frac{1 - \{1 - (4/\pi)^2\}\varepsilon^2}{1 - \{1 - (2/\pi)^2\}\varepsilon^2}} \tag{72}$$

ε, in turn can be regarded as a function of $\overline{W}_\infty$. Since Eq. (70) is intended to exclude the effect of L/D, Eq. (72) can be construed to define the load scaling factor

$$\alpha(\overline{W}) = \alpha(\varepsilon(\overline{W}_\infty = \overline{W})) \tag{73}$$

as shown in Fig. 5. It is seen that for a wide range of the load parameter, $\overline{W}$, α is hardly distinguishable from unity. Consequently, the value of $\alpha = 1.125$ (at $\overline{W} = 10.0$) should be quite satisfactory; thus

$$\Sigma = \frac{\overline{W}}{\overline{W}_{sh}} \simeq 2.3704\left[1 - \frac{\tanh\ (1.125\ L/D)}{1.125\ (L/D)}\right] \tag{74}$$

which would be used to scale the load parameter as well as the dimensionless dynamic coefficients.

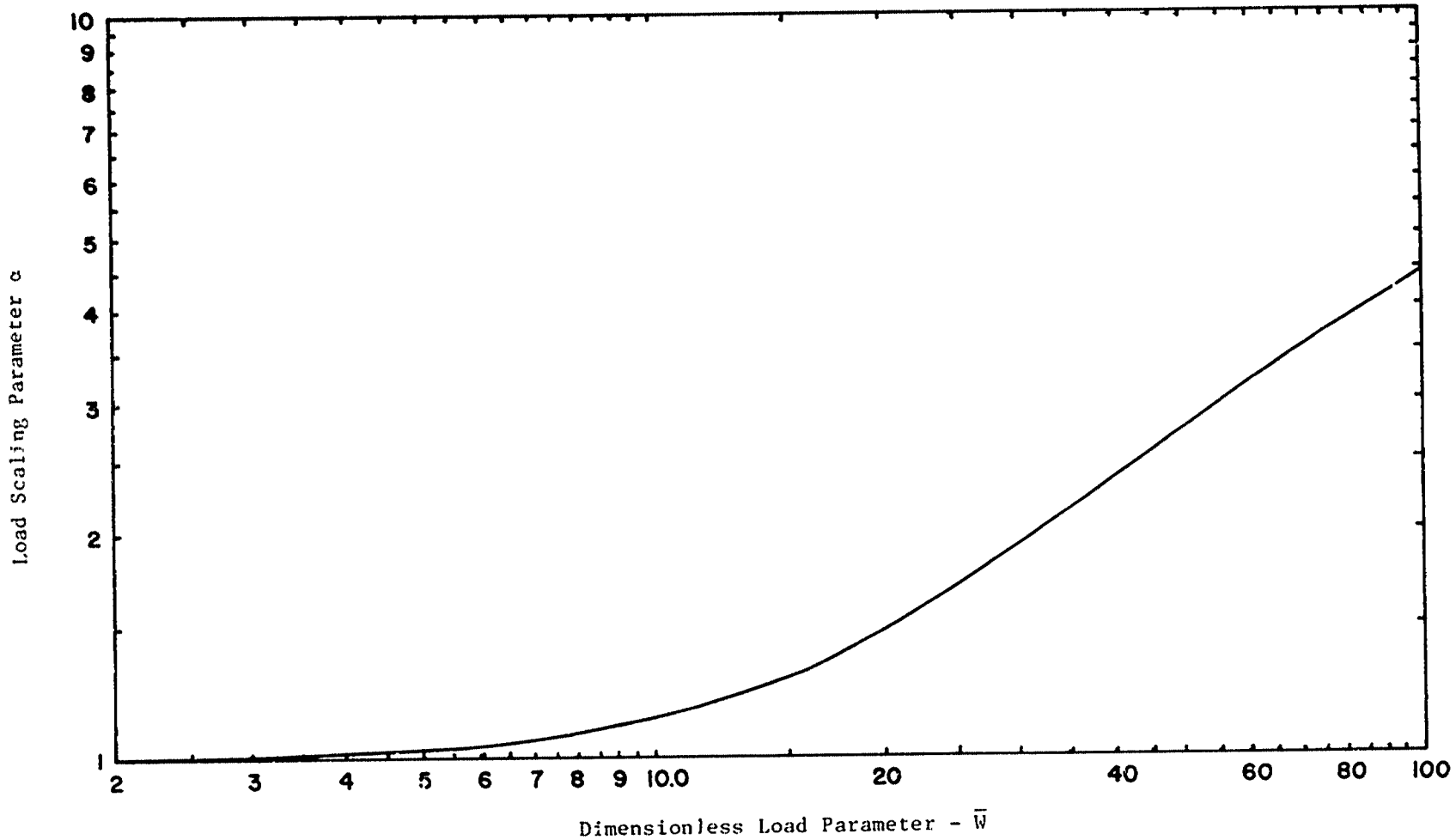

Figure 5 Load Scaling Parameter

For instance, if a data table for L/D = 0.5 is available, then

$$(\Sigma)_{table} = 0.22195$$

If the design under consideration is for L/D = 1.0, i.e.,

$$(\Sigma)_{design} = 0.66518$$

the effective load for the available table should be

$$(\bar{W})_{table} = \frac{0.22195}{0.66518} \; (\bar{W})_{design} = 0.3367 \; (\bar{W})_{design}$$

which would be used to interpolate in the data table to obtain

$$(\bar{K}_{xx}, \text{ etc.}; \; B_{xx}, \text{ etc.})_{table}$$

Finally,

$$(\bar{K}_{xx}, \text{ etc}; \; \bar{B}_{xx}, \text{ etc.})_{design}$$

$$= \frac{0.66518}{0.22195} \; (\bar{K}_{xx}, \text{ etc.}; \; \bar{B}_{xx}, \text{ etc.})_{table}$$

$$= 2.9970 \; (\bar{K}_{xx}, \text{ etc.}; \; \bar{B}_{xx}, \text{ etc.})_{table}$$

In this manner, a data table of a particular value of L/D can be reasonably used for designs of somewhat different L/D. This scaling procedure should not be used if there is significant preloading.

4.4 Data Smoothing

The full range interpolation procedure is sensitive to the presence of inaccurate data points. Numerically computed data points can be inaccurate for a variety of reasons; the most common ones are:

- faulty algorithm
- improper mesh (or function) setup, and
- inadequate convergence control

Unfortunately, such inaccuracies often show up even with "proven" softwares as run by an "experienced" user. Because the full range interpolation procedure is sensitive to inaccuracies in the data table, it can be used as the tool to uncover bad data points which should be adjusted.

Upon compiling a retrieval table, the comparison function and its spline interpolation coefficients (first, second, and third derivatives with respect to the working parameter) in each data interval are printed out. Lack of smoothness can be recognized at a glance by inspection of the sign of the first derivative. An isolated change of sign or a succession of sign reversals prominently mark the presence of bad data points.

Very often the inaccuracy associated with each data point is quite modest. But the error may be of alternate signs for a group of such data points in close range. In this case, the table is readily "fixed" by omitting some of the original data points. In some other instances, neighboring groups of data points depict an abrupt change. This is most likely caused by the necessity of employing a different input setup to obtain the data points of the two groups. It is then necessary to adjust one or more data points to permit smooth interpolation over the full range.

Fig. 6(a) shows an example of how "ripples" would be generated by the full range interpolation procedure. In this particular case, a number of data points of questionable accuracy were contained in the original data table as furnished [3] . "Data clutter" in a range of moderately high load level is probably due to loss of accuracy associated with the use of finite difference operation on "trajectory" points to compute the impedance

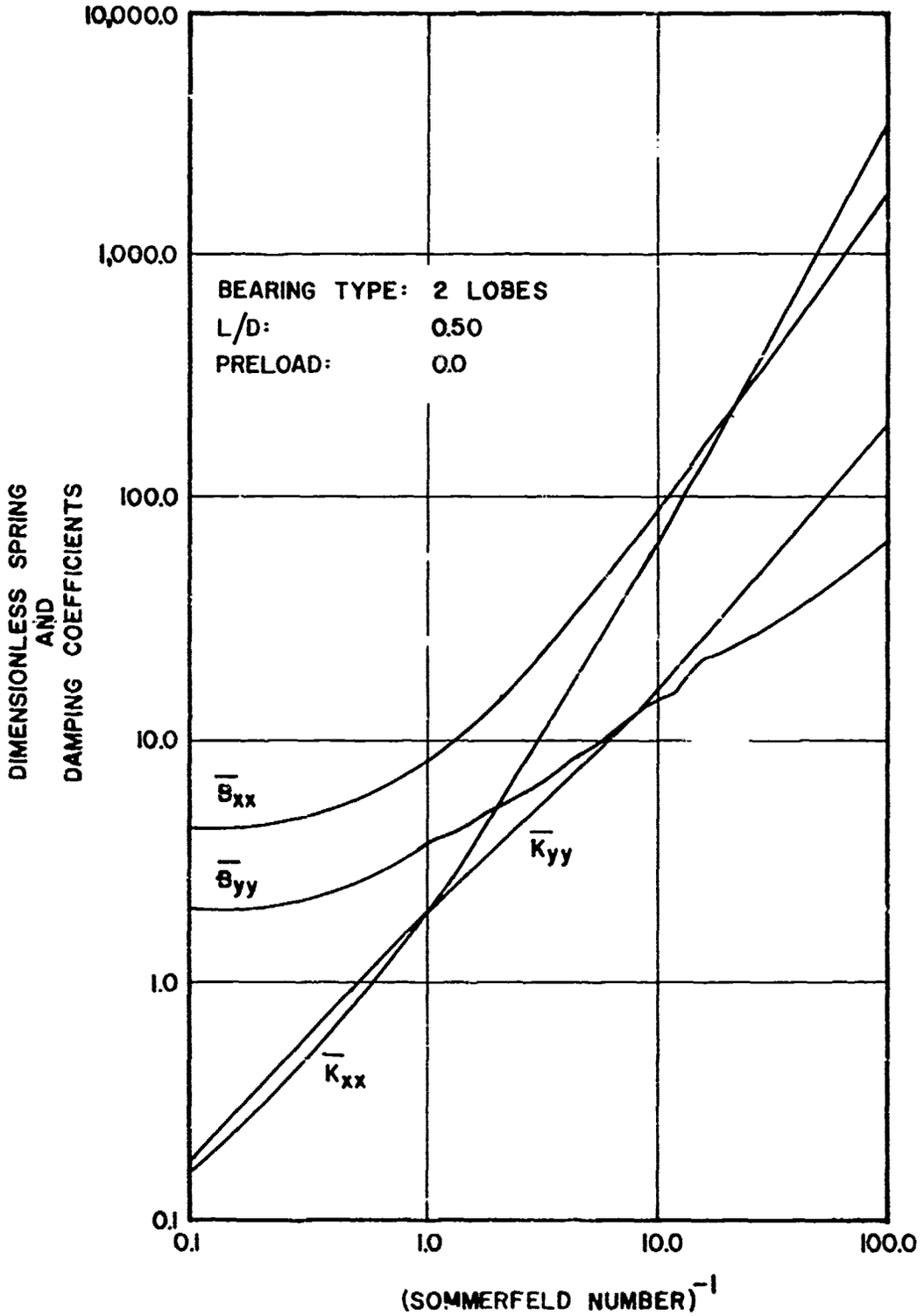

Figure 6(a) Ripples in Original Data

coefficients. Removal of "data clutter" by omitting six of the original seventeen data points permits smooth graphing by interpolation as shown in Fig. 6(b).

A thorough screening of each data table was performed. Adjustments and/or omissions are made where necessary. Therefore, the retrieval files as listed in Appendix D no longer correspond fully to the original data tables.

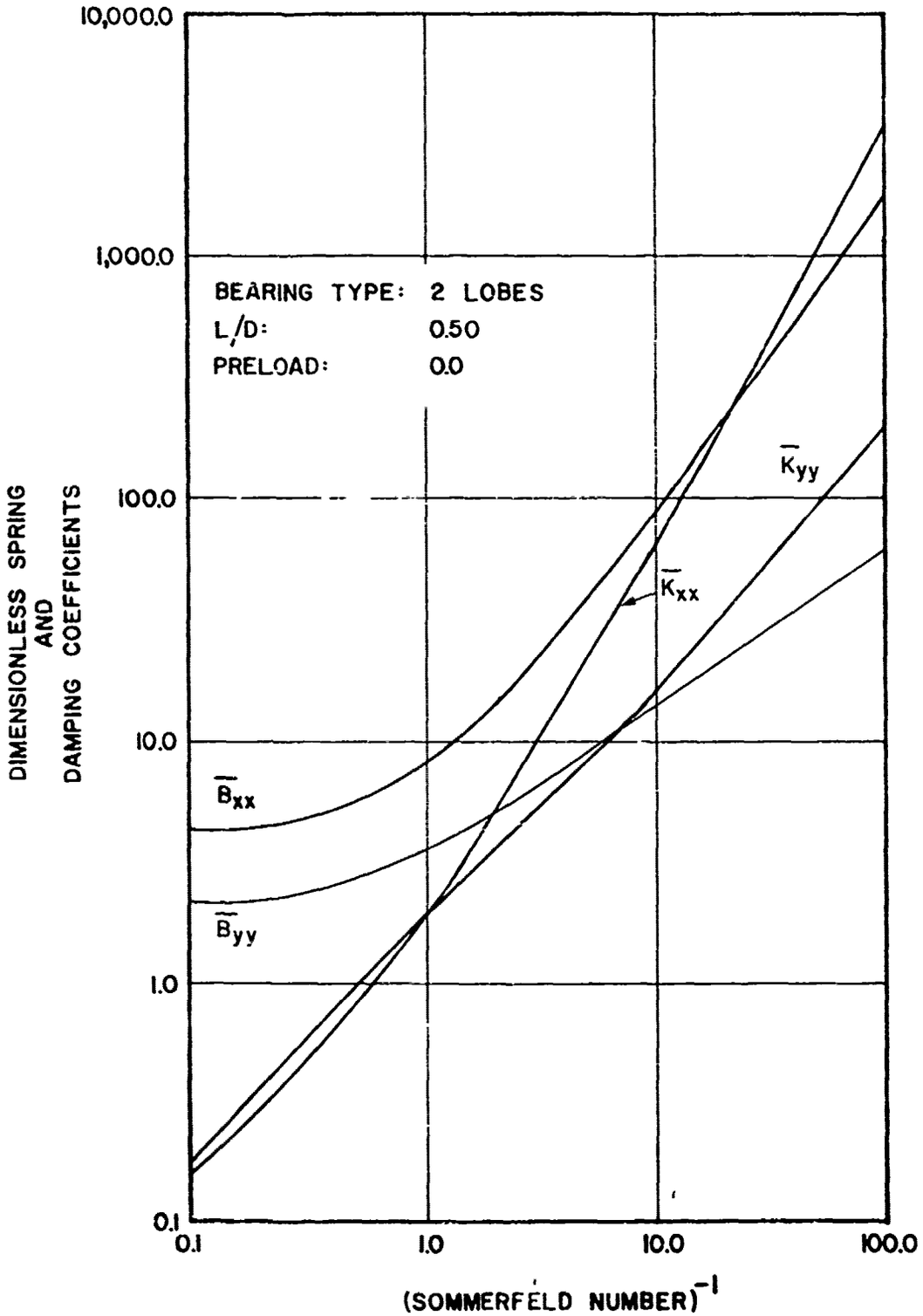

Figure 6(b) Smooth Curves upon Removal of Data Clutter

APPENDIX A

SAMPLE RUNS

The data retrieval software is designed primarily to prepare dynamic data of fluid film bearings for use as part of the input for running the Rotor System Vibrations Program (RSVP) [9]. In addition to extracting the necessary information from a stored data table, at user's command, it performs the supplementary functions of

- shifting the direction of load vector,
- adjusting the data for any deviation of L/D from that of the data table, and
- incorporation of foundation compliance with allowance for inertia and dissipation effects.

It may also be used simply to prepare a listing of the data table in either the dimensional or the dimensionless form in a load range specified by the user.

The software is coded in FORTRAN and is written in the interactive mode. It can thus be run on any computer system which provides the FORTRAN option and can be commanded from an interactive terminal. The bank of data tables may be located on either tape or disk type mass storage device. Thirty-one data tables are listed in Appendix D. The user may install additional data tables according to the procedure described in Section IV. The format of the data table is described in Section 3.4. The source listing of the software is given in Appendix E.

Several sample runs are shown on the following pages. Each sample includes:

- a record of the interactive session with the prompting messages enclosed in boxes;
- a complete output of bearing data for the applicable operating condition(s), including file identification, static characteristics, table of dynamic characteristics, effective stiffness/damping representation with descriptive headings; and

- as required, a listing of the data lines suitable for incorporation into the input setup for running the Rotor System Vibration Program.

The last listing can be punched out into data cards.

Brief descriptions of these sample runs with commentary on notable features are given below:

Sample 1 — Synchronous Data with Anisotropic Foundation Compliance in Two Speed Groups, L/D Adjustment Accepted, Inclined Load

L/D of specified bearing (0.6667) is different from that of data table (0.50).

Load vector of bearing is inclined to the vertical direction by 30 degrees.

Foundation data includes inertia (weight) stiffness, and damping coefficients; the latter have distinct values in vertical and horizontal planes.

Sample 2 — Synchronous Data with Rigid Foundation in Two Speed Groups, No L/D Adjustment

Same bearing as Sample I, but L/D adjustment is suppressed. Load direction coincides with vertical direction. Same speed points in two groups as Sample I.

Sample 3 — Synchronous Data with Rigid Foundation in Two Speed Groups, L/D Adjustment Accepted

By comparison with Sample II, this sample shows the effect of L/D adjustment.

Sample 4 — Synchronous Data with Rigid Foundation in Three Speed Groups, L/D Adjustment Accepted, Inclined Load.

By comparison with Sample III, this sample shows that the dynamic coefficients vary with the load direction, but the static characteristics as well as the stiffness/damping representation are independent of the load direction.

This run also shows the capability of generating data for a third speed group.

Sample 5 — Asynchronous Data with Rigid Foundation, Two Frequency Groups at the Same Speed, L/D Matched with Data Table

A single data line of dynamic characteristics is shown for each frequency group because such data for the bearing on rigid foundation is independent of frequency.

Sample 6 — Asynchronous Data with Isotropic Foundation Compliance

Foundation has an isotropic elastic compliance, (reciprocal of stiffness) but no inertia and damping effects. The overall dynamic coefficients become frequency dependent and are thus generated at each frequency.

SAMPLE 1

RECORD OF INTERACTIVE SESSION

```
ENTER DATA TABLE NAME: PJ-05-1
ENTER OUTPUT FILE NAME: OUTPUT

SELECT:   (1) PREPARE DATA FOR RSVP INPUT
          (2) DIMENSIONAL TABLE
          (3) DIMENSIONLESS TABLE
          (4) QUIT
1

SELECT:   (1) SYNCH FREQ, OR
          (2) ASYNCH FREQ?
1
ENTER BEARING LENGTH (IN)
1.0
ENTER BEARING DIAMETER (IN)
1.5
ENTER BEARING CLEARANCE (IN)
0.001
ENTER VISCOSITY (CENTI-POISE)
40.0
ENTER BEARING LOAD (LBS)
750.0
ENTER BEARING COEFS FILE NAME: RSVP
SELECT:   (1) USE DEFAULT L/D =     0.5000
          (2) ADJUST DATA FOR L/D =     0.6667
2

SELECT:   (1) LOAD VECTOR IN VERTICAL PLANE, OR
          (2) INCLINED LOAD VECTOR?
2
     ENTER LOAD INCLINATION ANGLE (DEG)?
30.0

SELECT:   (1) RIGID FOUNDATION
          (2) ISOTROPIC FOUNDATION COMPLIANCE, OR
          (3) ANISOTROPIC FOUNDATION COMPLIANCE?
3

SELECT:   (1) RADIAL BEARING, OR
          (2) ANGULAR BEARING?
1
     ENTER PEDESTAL WEIGHT (LB)?
120.0
     ENTER PEDESTAL STIFFNESS IN VERTICAL PLANE?
     (LB/IN) FOR RADIAL BRG, OR (IN-LB/RAD) FOR ANG BRG
2.50+04
     ENTER PEDESTAL STIFFNESS IN HORIZONTAL PLANE?
     (LB/IN) FOR RADIAL BRG, OR (IN-LB/RAD) FOR ANG BRG
1.00+04
     ENTER PEDESTAL DAMPING IN VERTICAL PLANE?
     (LB-SEC/IN) FOR RAD BRG, OR (IN-LB-SEC/RAD) FOR ANG BRG
10.0
```

Sample 1 - Record of Interactive Session (continued)

```
      ENTER PEDESTAL DAMPING IN HORIZONTAL PLANE?
      (LB-SEC/IN) FOR RAD BRG, OR (IN-LB-SEC/RAD) FOR ANG BRG
 25.0
 ENTER LOWEST SPEED (RPM)
 6000.0
 ENTER HIGHEST SPEED (RPM)
 9000.0
 ENTER NUMBER OF SPEED POINTS (NOT MORE THAN 11)
 11

  SELECT - (1) ANOTHER SPEED GROUP
           (2) QUIT
 1
 ENTER LOWEST SPEED (RPM)
 9000.0
 ENTER HIGHEST SPEED (RPM)
 12000.0
 ENTER NUMBER OF SPEED POINTS (NOT MORE THAN 11)
 11

  SELECT - (1) ANOTHER SPEED GROUP
           (2) QUIT
 2
```

RETRIEVAL FILE NO PJ-05-1
FILE SIZE = 17
L/D = 0 5000
HLFA = 1 1250

SAMPLE 1

TABULATION OF BEARING DATA

L (IN)	DIA (IN)	C (IN)	VISC (CP)	W (LBS)	SPEED RANGE (RPM)	
1 0000	1 5000	0 001000	4.0000 01	750 00	6000.00 TO 9000.00	11 PTS

LOAD PARAMETER IS ADJUSTED FOR L/D = 0.6667

RPM	ECC(IN)	ATT ANGLE	FRICT(HP)	Q-REQ(GPM)	Q-LOST(GPM)
6 0000D 03	3.4171D-04	6.8805D 01	8.6080D-04	8.0048D-02	3.8200D-02
6 2483D 03	3.3232D-04	6.9402D 01	9.3257D-04	8.2827D-02	3.8685D-02
6.5068D 03	3.2302D-04	6.9994D 01	1.0105D-03	8.5705D-02	3 9156D-02
6 7761D 03	3.1383D-04	7.0582D 01	1.0951D-03	8.8686D-02	3.9614D-02
7.0565D 03	3.0476D-04	7.1164D 01	1.1871D-03	9.1775D-02	4.0059D-02
7.3485D 03	2.9581D-04	7.1741D 01	1.2869D-03	9.4976D-02	4.0489D-02
7.6525D 03	2.8698D-04	7.2312D 01	1 3953D-03	9.8294D-02	4.0905D-02
7.9692D 03	2.7829D-04	7.2873D 01	1.5130D-03	1.0173D-01	4.1305D-02
8 2990D 03	2 6972D-04	7.3425D 01	1.6410D-03	1.0530D-01	4.1688D-02
8 6424D 03	2.6128D-04	7.3966D 01	1.7799D-03	1.0899D-01	4.2054D-02
9 0000D 03	2.5298D-04	7.4494D 01	1.9309D-03	1.1283D-01	4.2402D-02

LOAD AND DYNAMIC COEFFICIENTS ARE ADJUSTED FOR L/D = 0.6667

RPM	K-XX	B-XX	K-XY	B-XY	K-YX	B-YX	K-YY	B-YY
6.000D 03	-9.863D 04	1.593D 01	-1.036D 03	-3.021D 00	1.982D 03	-3.488D-01	-1.134D 05	2.970D 01
6.248D 03	-1.092D 05	1.678D 01	-1.259D 03	-3.342D 00	2.341D 03	-3.758D-01	-1.239D 05	3.029D 01
6 507D 03	-1.206D 05	1.773D 01	-1.526D 03	-3.683D 00	2.757D 03	-4.081D-01	-1.352D 05	3.094D 01
6.776D 03	-1.330D 05	1.877D 01	-1.844D 03	-4.044D 00	3.239D 03	-4.473D-01	-1.476D 05	3.167D 01
7.056D 03	-1.464D 05	1.992D 01	-2.222D 03	-4 427D 00	3.795D 03	-4 956D-01	-1 609D 05	3.249D 01
7 348D 03	-1.609D 05	2.118D 01	-2.670D 03	-4.832D 00	4.437D 03	-5.542D-01	-1.754D 05	3.339D 01
7 653D 03	-1.767D 05	2.257D 01	-3.200D 03	-5.258D 00	5.177D 03	-6.259D-01	-1.912D 05	3.439D 01
7.969D 03	-1.938D 05	2.410D 01	-3.824D 03	-5 704D 00	6.028D 03	-7 137D-01	-2 082D 05	3.551D 01
8 299D 03	-2.124D 05	2.577D 01	-4.559D 03	-6 170D 00	7 005D 03	-8.208D-01	-2.268D 05	3.674D 01
8 642D 03	-2.325D 05	2.759D 01	-5.421D 03	-6 653D 00	8.124D 03	-9.509D-01	-2.468D 05	3.810D 01
9.000D 03	-2 542D 05	2.959D 01	-6.430D 03	-7.154D 00	9 405D 03	-1.108D 00	-2.686D 05	3.961D 01

Sample 1 - Tabulation of Bearing Data (continued)

```
*****************SYNCH BRG CHARACTERISTICS*****************   STABILITY  PARAMETERS
[illegible]                                                    [illegible]
6 0000D 03-1 1337D 05 6 3400D-02 -9 8650D 04 4 9455D-02   UNCONDITIONALLY STABLE
6 2483D 03-1 2384D 05 8 1392D-02 -1 0918D 05 4 8717D-02   UNCONDITIONALLY STABLE
6 5068D 03-1.3520D 05 7 9697D-02 -1 2061D 05 4 8142D-02   UNCONDITIONALLY STABLE
6 7761D 03-1 4752D 05 7.8316D-02 -1 3300D 05 4 7697D-02   UNCONDITIONALLY STABLE
7 0565D 03-1 6087D 05 7 7252D-02 -1 4645D 05 4 7351D-02   UNCONDITIONALLY STABLE
7 3485D 03-1 7535D 05 7.6513D-02 -1 6103D 05 4 7078D-02   UNCONDITIONALLY STABLE
7.6525D 03-1 9104D 05 7.6107D-02 -1 7686D 05 4 6851D-02   UNCONDITIONALLY STABLE
7 9692D 03-2 0806D 05 7 6041D-02 -1.9401D 05 4 6646D-02   UNCONDITIONALLY STABLE
8 2990D 03-2 2650D 05 7.6323D-02 -2 1262D 05 4 6443D-02   UNCONDITIONALLY STABLE
8 6424D 03-2 4649D 05 7 6953D-02 -2 3278D 05 4 6229D-02   UNCONDITIONALLY STABLE
9 0000D 03-2 6816D 05 7 7926D-02 -2 5463D 05 4 5999D-02   UNCONDITIONALLY STABLE
```

LOAD PARAMETER IS ADJUSTED FOR L/D = 0 6667

RPM	ECC(IN)	ATT ANGLE	FRICT(HP)	Q-REQ(GPM)	Q-LOST(GPM)
9 0000D 03	2.5298D-04	7.4494D 01	1 9309D-03	1 1283D-01	4.2402D-02
9 2627D 03	2 4718D-04	7.4860D 01	2.0459D-03	1 1563D-01	4.2638D-02
9 5330D 03	2.4145D-04	7.5219D 01	2 1679D-03	1.1851D-01	4.2864D-02
9 8112D 03	2.3580D-04	7.5570D 01	2 2973D-03	1 2146D-01	4.3081D-02
1 0098D 04	2.3022D-04	7.5914D 01	2 4345D-03	1 2449D-01	4.3288D-02
1 0392D 04	2 2472D-04	7 6249D 01	2 5801D-03	1 2760D-01	4 3486D-02
1 0696D 04	2.1930D-04	7 6575D 01	2.7346D-03	1 3079D-01	4.3674D-02
1 1008D 04	2 1396D-04	7.6893D 01	2 8985D-03	1 3407D-01	4.3853D-02
1 1329D 04	2.0870D-04	7 7202D 01	3 0723D-03	1 3743D-01	4.4022D-02
1 1660D 04	2.0352D-04	7 7502D 01	3 2567D-03	1 4088D-01	4.4183D-02
1 2000D 04	1.9843D-04	7.7793D 01	3 4524D-03	1 4442D-01	4.4334D-02

(Page 2 of 3)

Sample 1 - Tabulation of Bearing Data (continued)

LOAD AND DYNAMIC COEFFICIENTS ARE ADJUSTED FOR L/D = 0 6667

RPM	K-XX	B-XX	K-XY	B-XY	K-YX	B-YX	K-YY	B-YY
9.000D	03-2.542D 05	2 959D 01	-6.430D 03	-7.154D 00	9.405D 03	-1 108D 00	-2 686D 05	3 961D 01
9.263D	03-2.708D 05	3.111D 01	-7.247D 03	-7 517D 00	1 042D 04	-1 239D 00	-2 851D 05	4.077D 01
9.533D	03-2.883D 05	3.273D 01	-8.158D 03	-7 886D 00	1 154D 04	-1 388D 00	-3.026D 05	4.202D 01
9.811D	03-3.068D 05	3.445D 01	-9.172D 03	-8.260D 00	1 277D 04	-1 556D 00	-3 211D 05	4.335D 01
1.010D	04-3.264D 05	3.628D 01	-1.030D 04	-8.638D 00	1 411D 04	-1 746D 00	-3 407D 05	4.477D 01
1.039D	04-3 471D 05	3.822D 01	-1 155D 04	-9 017D 00	1 558D 04	-1 961D 00	-3 615D 05	4.629D 01
1 070D	04-3 691D 05	4.027D 01	-1.294D 04	-9 396D 00	1 718D 04	-2 202D 00	-3 834D 05	4 792D 01
1 101D	04-3 923D 05	4.244D 01	-1.448D 04	-9 774D 00	1.894D 04	-2 473D 00	-4 067D 05	4 965D 01
1 133D	04-4 168D 05	4 474D 01	-1.618D 04	-1 015D 01	2.086D 04	-2 775D 00	-4.313D 05	5 150D 01
1 166D	04-4.427D 05	4 718D 01	-1.807D 04	-1 052D 01	2 295D 04	-3 111D 00	-4 573D 05	5 347D 01
1 200D	04-4.702D 05	4.976D 01	-2.015D 04	-1 087D 01	2 523D 04	-3 487D 00	-4 848D 05	5 556D 01

**********SYNCH BRG CHARACTERISTICS********** STABILITY PARAMETERS

RPM	MIN STIFF	MIN DAMP	MA STIFF	MA DAMP	CR MASS	F RATIO
9.0000D	03-2 6816D 05	7 7926D-02	-2 5463D 05	4.5999D-02	UNCONDITIONALLY STABLE	
9 2627D	03-2 8464D 05	7 8817D-02	-2 7122D 05	4 5829D-02	UNCONDITIONALLY STABLE	
9 5330D	03-3 0209D 05	7.9867D-02	-2 8876D 05	4.5656D-02	UNCONDITIONALLY STABLE	
9.8112D	03-3 2057D 05	8.1067D-02	-3 0733D 05	4 5488D-02	UNCONDITIONALLY STABLE	
1.0098D	04-3 4014D 05	8.2409D-02	-3 2696D 05	4 5330D-02	UNCONDITIONALLY STABLE	
1 0392D	04-3 6086D 05	8.3885D-02	-3 4773D 05	4.5189D-02	UNCONDITIONALLY STABLE	
1 0696D	04-3 8280D 05	8.5485D-02	-3 6969D 05	4 5070D-02	UNCONDITIONALLY STABLE	
1 1008D	04-4.0601D 05	8.7204D-02	-3 9292D 05	4.4978D-02	UNCONDITIONALLY STABLE	
1 1329D	04-4 3056D 05	8 9036D-02	-4 1750D 05	4 4917D-02	UNCONDITIONALLY STABLE	
1.1660D	04-4 5653D 05	9 0985D-02	-4 4350D 05	4 4891D-02	UNCONDITIONALLY STABLE	
1 2000D	04-4 8399D 05	9 3031D-02	-4 7100D 05	4 4900D-02	UNCONDITIONALLY STABLE	

(Page 3 of 3)

SAMPLE 1

DATA LINES IN RSVP FORMAT

```
-9.863D 04 1.593D 01-1.036D 03-3.021D 00 1.982D 03-3 4886-01-1 134D 05 2 970D 01
-1.032D 05 1.678D 01-1.259D 03-3 342D 00 2 341D 03-3 7580-01-1.239D 05 3 029D 01
-1.206D 05 1.773D 01-1.526D 03-3.683D 00 2 757D 03-4 0810-01-1.352D 05 3 094D 01
-1.330D 05 1.877D 01-1.844D 03-4.044D 00 3 239D 03-4 4730-01-1.476D 05 3 167D 01
-1.464D 05 1.992D 01-2.222D 03-4 427D 00 3 795D 03-4.9560-01-1.609D 05 3 249D 01
-1.609D 05 2.118D 01-2 670D 03-4.832D 00 4.437D 03-5 5420-01-1.754D 05 3 339D 01
-1.767D 05 2.257D 01-3.200D 03-5.258D 00 5.177D 03-6 2590-01-1.912D 05 3 439D 01
-1.938D 05 2.410D 01-3.824D 03-5.704D 00 6.028D 03-7 1370-01-2 082D 05 3 551D 01
-2.124D 05 2.577D 01-4.559D 03-6.170D 00 7.005D 03-8.2080-01-2.268D 05 3 674D 01
-2.325D 05 2.759D 01-5.421D 03-6 653D 00 8.124D 03-9 5090-01-2 468D 05 3 810D 01
-2.542D 05 2.959D 01-6.430D 03-7.154D 00 9.405D 03-1.108D 00-2.686D 05 3 961D 01
-2.542D 05 2.959D 01-6.430D 03-7 154D 00 9.405D 03-1 108D 00-2.686D 05 3 961D 01
-2.708D 05 3.111D 01-7.247D 03-7.517D 00 1.042D 04-1 239D 00-2 851D 05 4 077D 01
-2.883D 05 3.273D 01-8.158D 03-7.886D 00 1 154D 04-1 388D 00-3.026D 05 4.202D 01
-3.068D 05 3.445D 01-9.172D 03-8.260D 00 1.277D 04-1.556D 00-3.211D 05 4 335D 01
-3.264D 05 3.628D 01-1 030D 04-8.638D 00 1 411D 04-1 746D 00-3 407D 05 4.477D 01
-3.471D 05 3.822D 01-1.155D 04-9 017D 00 1.558D 04-1 961D 00-3 615D 05 4 629D 01
-3.691D 05 4.027D 01-1.294D 04-9.396D 00 1.718D 04-2 202D 00-3.834D 05 4.792D 01
-3.923D 05 4.244D 01-1.448D 04-9.774D 00 1.894D 04-2.473D 00-4.067D 05 4.965D 01
-4.168D 05 4.474D 01-1.618D 04-1.015D 01 2.086D 04-2 775D 00-4.313D 05 5 150D 01
-4.427D 05 4.718D 01-1.807D 04-1 052D 01 2.295D 04-3 111D 00-4.573D 05 5 347D 01
-4.702D 05 4.976D 01-2.015D 04-1.087D 01 2 523D 04-3.487D 00-4 848D 05 5 556D 01
```

SAMPLE 2

RECORD OF INTERACTIVE SESSION

```
ENTER DATA TABLE NAME: PJ-05-1
ENTER OUTPUT FILE NAME: OUTPUT

SELECT:   (1) PREPARE DATA FOR RSVP INPUT
          (2) DIMENSIONAL TABLE
          (3) DIMENSIONLESS TABLE
          (4) QUIT
1

SELECT:   (1) SYNCH FREQ, OR
          (2) ASYNCH FREQ?
1
ENTER BEARING LENGTH (IN)
1.0
ENTER BEARING DIAMETER (IN)
1.5
ENTER BEARING CLEARANCE (IN)
0.001
ENTER VISCOSITY (CENTI-POISE)
40.0
ENTER BEARING LOAD (LBS)
750.0
ENTER BEARING COEFS FILE NAME: RSVP
SELECT:   (1) USE DEFAULT L/D =      0.5000
          (2) ADJUST DATA FOR L/D =      0.6667
1

SELECT:   (1) LOAD VECTOR IN VERTICAL PLANE, OR
          (2) INCLINED LOAD VECTOR?
1

SELECT:   (1) RIGID FOUNDATION
          (2) ISOTROPIC FOUNDATION COMPLIANCE, OR
          (3) ANISOTROPIC FOUNDATION COMPLIANCE?
1
ENTER LOWEST SPEED (RPM)
6000.0
ENTER HIGHEST SPEED (RPM)
9000.0
ENTER NUMBER OF SPEED POINTS (NOT MORE THAN 11)
11
```

(Page 1 of 2)

Sample 2 - Record of Interactive Session (continued)

```
 SELECT - (1) ANOTHER SPEED GROUP
          (2) QUIT
 1
ENTER LOWEST SPEED (RPM)
 9000.0
ENTER HIGHEST SPEED (RPM)
 12000.0
ENTER NUMBER OF SPEED POINTS (NOT MORE THAN 11)
 11

 SELECT - (1) ANOTHER SPEED GROUP
          (2) QUIT
 2
```

RETRIEVAL FILE NO PJ-05-1
FILE SIZE = 17
L/D = 0.5000
ALFA = 1.1250

SAMPLE 2

TABULATION OF BEARING DATA

L (IN)	DIA (IN)	C (IN)	VISC (CP)	W (LBS)	SPEED RANGE (RPM)		
1.0000	1.5000	0.001000	4.000D 01	750.00	6000.00 TO	9000.00	11 PTS

RPM	ECC(IN)	ATT ANGLE	FRICT(HP)	Q-REQ(GPM)	Q-LOST(GPM)
6.0000D 03	4.5916D-04	6.1276D 01	8.8661D-04	8.6399D-02	5.1403D-02
6.2483D 03	4.4947D-04	6.1907D 01	9.5796D-04	8.9433D-02	5.2391D-02
6.5068D 03	4.3975D-04	6.2539D 01	1.0353D-03	9.2567D-02	5.3372D-02
6.7761D 03	4.3003D-04	6.3172D 01	1.1191D-03	9.5807D-02	5.4343D-02
7.0565D 03	4.2030D-04	6.3804D 01	1.2099D-03	9.9155D-02	5.5304D-02
7.3485D 03	4.1056D-04	6.4434D 01	1.3084D-03	1.0261D-01	5.6250D-02
7.6525D 03	4.0082D-04	6.5060D 01	1.4152D-03	1.0619D-01	5.7181D-02
7.9692D 03	3.9108D-04	6.5682D 01	1.5312D-03	1.0988D-01	5.8093D-02
8.2990D 03	3.8135D-04	6.6299D 01	1.6571D-03	1 1370D-01	5.8987D-02
8.6424D 03	3.7167D-04	6.6912D 01	1.7938D-03	1.1765D-01	5.9862D-02
9.0000D 03	3.6203D-04	6.7520D 01	1.9422D-03	1.2173D-01	6.0717D-02

RPM	K-XX	B-XX	K-XY	B-XY	K-YX	B-YX	K-YY	B-YY
6.000D 03	1.504D 06	7.746D 03	2.748D 06	2.916D 03	-1.026D 06	2 916D 03	1.528D 06	4.565D 03
6.248D 03	1.469D 06	7.479D 03	2.757D 06	2.794D 03	-1.075D 06	2 794D 03	1 531D 06	4.487D 03
6.507D 03	1.436D 06	7.226D 03	2.767D 06	2 678D 03	-1 125D 06	2 678D 03	1 535D 06	4.412D 03
6 776D 03	1.404D 06	6.987D 03	2 779D 06	2.566D 03	-1 177D 06	2 566D 03	1.538D 06	4 340D 03
7 056D 03	1.373D 06	6.762D 03	2.793D 06	2 459D 03	-1 231D 06	2 459D 03	1 541D 06	4 271D 03
7.348D 03	1.344D 06	6.550D 03	2.809D 06	2.357D 03	-1.286D 06	2.357D 03	1.545D 06	4.204D 03
7.653D 03	1.315D 06	6.350D 03	2.828D 06	2 259D 03	-1 344D 06	2 259D 03	1.548D 06	4 141D 03
7 969D 03	1.288D 06	6.162D 03	2 849D 06	2 166D 03	-1.404D 06	2 166D 03	1 551D 06	4 080D 03
8.299D 03	1.262D 06	5.984D 03	2.873D 06	2 076D 03	-1 466D 06	2 076D 03	1 554D 06	4 021D 03
8.642D 03	1.236D 06	5.817D 03	2 899D 06	1 991D 03	-1 530D 06	1 991D 03	1 557D 06	3 965D 03
9.000D 03	1.212D 06	5.660D 03	2 929D 06	1 909D 03	-1 596D 06	1 909D 03	1 560D 06	3.911D 03

Sample 2 - Tabulation of Bearing Data

L (IN)	DIA (IN)	C (IN)	VISC (CP)	W (LBS)	SPEED RANGE (RPM)	
1.0000	1.5000	0.001000	4.0000 01	750 00	9000 00 TO 12000.00	11 PTS

********** SYNCH BRG CHARACTERISTICS **********				STABILITY PARAMETERS	
RPM	MIN STIFF	MIN DAMP	MAJ STIFF	MAJ DAMP	CR MASS	F RATIO
6.0000D 03	9.4421D 05	5.9765D-01	2.0876D 06	1.5824D 00	1.0218D 04	5.3047D-01
6.2483D 03	9.5235D 05	6.1143D-01	2.0484D 06	1.6268D 00	1.0232D 04	5.3115D-01
6.5068D 03	9.6058D 05	6.2569D-01	2.0104D 06	1.6733D 00	1.0248D 04	5.3176D-01
6.7761D 03	9.6888D 05	6.4046D-01	1.9734D 06	1.7220D 00	1.0266D 04	5.3229D-01
7.0565D 03	9.7724D 05	6.5577D-01	1.9376D 06	1.7731D 00	1.0287D 04	5.3276D-01
7.3485D 03	9.8566D 05	6.7162D-01	1.9028D 06	1.8267D 00	1.0309D 04	5.3318D-01
7.6525D 03	9.9413D 05	6.8805D-01	1.8691D 06	1.8830D 00	1.0332D 04	5.3356D-01
7.9692D 03	1.0027D 06	7.0505D-01	1.8364D 06	1.9421D 00	1.0355D 04	5.3392D-01
8.2990D 03	1.0112D 06	7.2267D-01	1.8046D 06	2.0042D 00	1.0378D 04	5.3425D-01
8.6424D 03	1.0198D 06	7.4092D-01	1.7739D 06	2.0695D 00	1.0402D 04	5.3456D-01
9.0000D 03	1.0284D 06	7.5986D-01	1.7441D 06	2.1378D 00	1.0425D 04	5.3486D-01

RPM	ECC(IN)	ATT ANGLE	FRICT(HP)	Q-REQ(GPM)	Q-LOST(GPM)
9.0000D 03	3.6203D-04	6.7520D 01	1.9422D-03	1.2173D-01	6.0717D-02
9.2627D 03	3.5523D-04	6.7950D 01	2.0551D-03	1.2471D-01	6.1312D-02
9.5330D 03	3.4847D-04	6.8377D 01	2.1748D-03	1.2777D-01	6.1897D-02
9.8112D 03	3.4175D-04	6.8803D 01	2.3017D-03	1.3090D-01	6.2471D-02
1.0098D 04	3.3507D-04	6.9227D 01	2.4362D-03	1.3411D-01	6.3035D-02
1.0392D 04	3.2844D-04	6.9648D 01	2.5789D-03	1.3739D-01	6.3589D-02
1.0696D 04	3.2186D-04	7.0068D 01	2.7301D-03	1.4077D-01	6.4132D-02
1.1008D 04	3.1534D-04	7.0485D 01	2.8904D-03	1.4422D-01	6.4664D-02
1.1329D 04	3.0888D-04	7.0900D 01	3.0603D-03	1.4777D-01	6.5185D-02
1.1660D 04	3.0248D-04	7.1311D 01	3.2406D-03	1.5140D-01	6.5694D-02
1.2000D 04	2.9614D-04	7.1720D 01	3.4317D-03	1.5513D-01	6.6192D-02

Sample 2 - Tabulation of Bearing Data (continued)

RPM	K-XX	B-XX	K-XY	B-XY	K-YX	B-YX	K-YY	B-YY
9.000D 03	1.212D 06	5.660D 03	2.929D 06	1.909D 03	-1 596D 06	1 909D 03	1 560D 06	3.911D 03
9.263D 03	1.196D 06	5.555D 03	2.951D 06	1.853D 03	-1.645D 06	1.853D 03	1.562D 06	3.874D 03
9.533D 03	1.179D 06	5.454D 03	2.975D 06	1.798D 03	-1.695D 06	1.798D 03	1 564D 06	3.838D 03
9.811D 03	1.164D 06	5.357D 03	3.001D 06	1.745D 03	-1.747D 06	1.745D 03	1.566D 06	3.803D 03
1.010D 04	1.149D 06	5.264D 03	3.028D 06	1.694D 03	-1.799D 06	1 694D 03	1.568D 06	3.769D 03
1.039D 04	1.134D 06	5.176D 03	3.057D 06	1.645D 03	-1.854D 06	1.645D 03	1.570D 06	3.736D 03
1.070D 04	1.120D 06	5.091D 03	3.088D 06	1.597D 03	-1.909D 06	1.597D 03	1.572D 06	3.703D 03
1.101D 04	1.106D 06	5.010D 03	3.120D 06	1.550D 03	-1 966D 06	1 550D 03	1.574D 06	3.672D 03
1.133D 04	1.092D 06	4.932D 03	3.154D 06	1 505D 03	-2 025D 06	1 505D 03	1.575D 06	3.641D 03
1.166D 04	1.079D 06	4.859D 03	3.190D 06	1.461D 03	-2.085D 06	1.461D 03	1.577D 06	3.611D 03
1.200D 04	1.066D 06	4.788D 03	3.228D 06	1.418D 03	-2.147D 06	1.418D 03	1.579D 06	3.582D 03

**********SYNCH BRG CHARACTERISTICS********** RPM	MIN STIFF	MIN DAMP	MAJ STIFF	MAJ DAMP	STABILITY PARAMETERS CP MASS	F RATIO
9.0000D 03	1.0284D 06	7 5986D-01	1.7441D 06	2.1381D 00	1 0425D 04	5.3486D-01
9.2627D 03	1.0344D 06	7.7372D-01	1.7235D 06	2.1889D 00	1.0441D 04	5.3505D-01
9.5330D 03	1.0404D 06	7.8796D-01	1.7033D 06	2.2415D 00	1 0458D 04	5.3524D-01
9.8112D 03	1.0464D 06	8.0257D-01	1 6837D 06	2.2960D 00	1 0473D 04	5.3542D-01
1.0098D 04	1.0524D 06	8.1757D-01	1.6644D 06	2.3525D 00	1.0489D 04	5.3560D-01
1.0392D 04	1.0583D 06	8.3298D-01	1.6456D 06	2.4109D 00	1.0304D 04	5.3578D-01
1.0696D 04	1.0642D 06	8.4879D-01	1.6272D 06	2.4715D 00	1 0518D 04	5 3596D-01
1.1008D 04	1.0700D 06	8.6504D-01	1.6093D 06	2.5342D 00	1 0532D 04	5.3613D-01
1.1329D 04	1.0758D 06	8.8171D-01	1 5917D 06	2.5992D 00	1 0545D 04	5.3632D-01
1.1660D 04	1.0813D 06	8.9890D-01	1.5745D 06	2.6667D 00	1 0559D 04	5 3648D-01
1.2000D 04	1.0872D 06	9.1649D-01	1.5578D 06	2.7364D 00	1.0570D 04	5.3667D-01

SAMPLE 2

DATA LINES IN RSVP FORMAT

```
1.504D 06 7.746D 03 2.748D 06 2.916D 03-1.026D 06 2.916D 03 1.528D 06 4.565D 03
1.469D 06 7 479D 03 2.757D 06 2.794D 03-1.075D 06 2.794D 03 1.531D 06 4.487D 03
1.436D 06 7.226D 03 2.767D 06 2.678D 03-1.125D 06 2.678D 03 1.535D 06 4.412D 03
1.404D 06 6.987D 03 2.779D 06 2.566D 03-1.177D 06 2 566D 03 1.538D 06 4.340D 03
1.373D 06 6.762D 03 2.793D 06 2.459D 03-1.231D 06 2.459D 03 1.541D 06 4.271D 03
1.344D 06 6.550D 03 2.809D 06 2.357D 03-1.286D 06 2.357D 03 1.545D 06 4.204D 03
1.315D 06 6.350D 03 2.828D 06 2 259D 03-1.344D 06 2.259D 03 1.548D 06 4 141D 03
1 288D 06 6.162D 03 2.849D 06 2.166D 03-1.404D 06 2.166D 03 1.551D 06 4.080D 03
1 262D 06 5.984D 03 2.873D 06 2.076D 03-1 466D 06 2 076D 03 1.554D 06 4.021D 03
1 236D 06 5.817D 03 2 899D 06 1.991D 03-1.530D 06 1.991D 03 1.557D 06 3.965D 03
1 212D 06 5.660D 03 2.929D 06 1.909D 03-1.596D 06 1 909D 03 1 560D 06 3.911D 03
1.212D 06 5 660D 03 2.929D 06 1.909D 03-1.596D 06 1.909D 03 1 560D 06 3.911D 03
1.196D 06 5.555D 03 2.951D 06 1.853D 03-1.645D 06 1.853D 03 1.562D 06 3.874D 03
1 179D 06 5 454D 03 2 975D 06 1 798D 03-1.695D 06 1 798D 03 1.564D 06 3.838D 03
1 164D 06 5.357D 03 3 001D 06 1.745D 03-1.747D 06 1.745D 03 1.566D 06 3.803D 03
1 149D 06 5 264D 03 3 028D 06 1 694D 03-1 799D 06 1 694D 03 1.568D 06 3 769D 03
1 134D 06 5.176D 03 3.057D 06 1.645D 03-1 854D 06 1.645D 03 1.570D 06 3.736D 03
1.120D 06 5.091D 03 3 088D 06 1 597D 03-1.909D 06 1.597D 03 1 572D 06 3.703D 03
1 106D 06 5.010D 03 3.120D 06 1.550D 03-1.966D 06 1.550D 03 1.574D 06 3.672D 03
1 092D 06 4.932D 03 3.154D 06 1.505D 03-2.025D 06 1.505D 03 1.575D 06 3.641D 03
1 079D 06 4.859D 03 3 190D 06 1.461D 03-2.085D 06 1.461D 03 1.577D 06 3.611D 03
1 066D 06 4.788D 03 3 228D 06 1 418D 03-2.147D 06 1 418D 03 1 579D 06 3.582D 03
```

SAMPLE 3

RECORD OF INTERACTIVE SESSION

```
ENTER DATA TABLE NAME: PJ-05-1
ENTER OUTPUT FILE NAME: OUTPUT

SELECT:   (1) PREPARE DATA FOR RSVP INPUT
          (2) DIMENSIONAL TABLE
          (3) DIMENSIONLESS TABLE
          (4) QUIT
 1

SELECT:   (1) SYNCH FREQ, OR
          (2) ASYNCH FREQ?
 1
ENTER BEARING LENGTH (IN)
 1.0
ENTER BEARING DIAMETER (IN)
 1.5
ENTER BEARING CLEARANCE (IN)
 0.001
ENTER VISCOSITY (CENTI-POISE)
 40.0
ENTER BEARING LOAD (LBS)
 750.0
ENTER BEARING COEFS FILE NAME: RSVP
SELECT:   (1) USE DEFAULT L/D =  0.5000
          (2) ADJUST DATA FOR L/D =  0.6667
 2

SELECT:   (1) LOAD VECTOR IN VERTICAL PLANE, OR
          (2) INCLINED LOAD VECTOR?
 1


SELECT:   (1) RIGID FOUNDATION
          (2) ISOTROPIC FOUNDATION COMPLIANCE, OR
          (3) ANISOTROPIC FOUNDATION COMPLIANCE?
 1
ENTER LOWEST SPEED (RPM)
 6000.0
ENTER HIGHEST SPEED (RPM)
 9000.0
ENTER NUMBER OF SPEED POINTS (NOT MORE THAN 11)
 11
```

Sample 3 - Record of Interactive Session (continued)

```
SELECT - (1) ANOTHER SPEED GROUP
         (2) QUIT
1
ENTER LOWEST SPEED (RPM)
9000.0
E[illegible]HEST SPEED (RPM)
1[illegible]
[illegible]ER OF SPEED POINTS (NOT MORE THAN 11)
[illegible]

SELECT - (1) ANOTHER SPEED GROUP
         (2) QUIT
2
```

(Page 2 of 2)

RETRIEVAL FILE NO PJ-05-1

FILE SIZE = 17
L/D = 0.5000
ALFA = 1.1250

SAMPLE 3

TABULATION OF BEARING DATA

L (IN)	DIA (IN)	C (IN)	VISC (CP)	W (LBS)	SPEED RANGE (RPM)	
1 0000	1.5000	0.001000	4.0000 01	750.00	6000.00 TO 9000 00	11 PTS

LOAD PARAMETER IS ADJUSTED FOR L/D = 0.6667

RPM	ECC(IN)	ATT ANGLE	FRICT(HP)	Q-REQ(GPM)	Q-LOST(GPM)
6.0000D 03	3.4171D-04	6.8805D 01	8.6080D-04	8 0048D-02	3.8200D-02
6.2483D 03	3.3232D-04	6.9402D 01	9.3257D-04	8.2827D-02	3.8685D-02
6 5068D 03	3.2302D-04	6.9994D 01	1.0105D-03	8.5705D-02	3 9156D-02
6.7761D 03	3 1383D-04	7.0582D 01	1.0951D-03	8 8686D-02	3.9614D-02
7.0565D 03	3.0476D-04	7.1164D 01	1 1871D-03	9 1775D-02	4 0059D-02
7 3485D 03	2.9581D-04	7.1741D 01	1 2869D-03	9 4976D-02	4.0489D-02
7.6525D 03	2.8698D-04	7.2312D 01	1.3953D-03	9 8294D-02	4.0905D-02
7 9692D 03	2.7829D-04	7.2873D 01	1.5130D-03	1 0173D-01	4.1305D-02
8 2990D 03	2 6972D-04	7.3425D 01	1.6410D-03	1.0530D-01	4.1688D-02
8 6424D 03	2.6128D-04	7.3966D 01	1.7799D-03	1.0899D-01	4.2054D-02
9 0000D 03	2 5298D-04	7.4494D 01	1.9309D-03	1 1283D-0	4 2402D-02

LOAD AND DYNAMIC COEFFICIENTS ARE ADJUSTED FOR L/D = 0 6667

RPM	K-XX	B-XX	K-XY	B-XY	K-YX	B-YX	K-YY	B-YY
6.0000D 03	1.164D 06	8.760D 03	3.001D 06	2.854D 03-1	7470 06	2.854D 03	1.566D 06	6.219D 03
6 248D 03	1.142D 06	8.548D 03	3 040D 06	2.737D 03-1	8220 06	2 737D 03	1 569D 06	6.141D 03
6 507D 03	1.122D 06	8.350D 03	3.082D 06	2 625D 03-1	.8999 06	2 625D 03	1.572D 06	6.066D 03
6.776D 03	1 102D 06	8.163D 03	3.128D 06	2.517D 03-1	9800 06	2 517D 03	1 574D 06	5 993D 03
7.056D 03	1.084D 06	7.989D 03	3.177D 06	2.414D 03-2	0640 06	2 414D 03	1 576D 06	5.923D 03
7.348D 03	1.066D 06	7.824D 03	3.230D 06	2.315D 03-2	1500 06	2 315D 03	1 579D 06	5.856D 03
7.653D 03	1 049D 06	7.671D 03	3 287D 06	2 221D 03-2	2410 06	2 221D 03	1 581D 06	5 792D 03
7.969D 03	1 032D 06	7 526D 03	3 348D 06	2 131D 03-2	3350 06	2 131D 03	1 583D 06	5 730D 03
8 299D 03	1 017D 06	7 392D 03	3.413D 06	2 044D 03-2	4320 06	2 044D 03	1.585D 06	5.671D 03
8.642D 03	1 002D 06	7 265D 03	3 483D 06	1 962D 03-2	5340 06	1 962D 03	1 587D 06	5.616D 03
9 000D 03	9 887D 05	7.148D 03	3 558D 06	1.884D 03-2	6390 06	1 884D 03	1 588D 06	5 563D 03

Sample 3 - Tabulation of Bearing Data (continued)

RPM	MIN STIFF	MIN DAMP	MAJ STIFF	MAJ DAMP	STABILITY PARAMETERS CR MASS	F RATIO
6.0000D 03	1.0465D 06	8.0264D-01	1.6836D 06	2.2963D 00	1.0474D 04	5.3542D-01
6.2483D 03	1.0549D 06	8.2390D-01	1.6566D 06	2.3764D 00	1.0495D 04	5.3568D-01
6.5068D 03	1.0632D 06	8.4597D-01	1.6304D 06	2.4606D 00	1.0516D 04	5.3592D-01
6.7761D 03	1.0714D 06	8.6888D-01	1.6052D 06	2.5492D 00	1.0535D 04	5.3618D-01
7.0565D 03	1.0795D 06	8.9272D-01	1.5806D 06	2.6423D 00	1.0554D 04	5.3641D-01
7.3485D 03	1.0875D 06	9.1742D-01	1.5570D 06	2.7401D 00	1.0571D 04	5.3668D-01
7.6525D 03	1.0953D 06	9.4311D-01	1.5342D 06	2.8427D 00	1 05860 04	5.3695D-01
7.9692D 03	1.1029D 06	9.6989D-01	1.5123D 06	2.9503D 00	1.0600D 04	5.3722D-01
8.2990D 03	1.1104D 06	9.9786D-01	1.4913D 06	3.0631D 00	1.0614D 04	5.3748D-01
8.6424D 03	1.1177D 06	1.0271D 00	1.4714D 06	3.1813D 00	1.0627D 04	5.3772D-01
9.0000D 03	1.1247D 06	1.0577D 00	1.4524D 06	3.3051D 00	1.0641D 04	5.3794D-01

LOAD PARAMETER IS ADJUSTED FOR L/D = 0.6667

RPM	ECC(IN)	ATT ANGLE	FRICT(HP)	Q-REQ(GPM)	Q-LOST(GPM)
9.0000D 03	2.5298D-04	7.4494D 01	1.9309D-03	1.1283D-01	4.2402D-02
9.2627D 03	2.4718D-04	7.4860D 01	2.0459D-03	1 1563D-01	4.2638D-02
9.5330D 03	2 4145D-04	7.5219D 01	2.1679D-03	1.1851D-01	4.2864D-02
9 8112D 03	2.3580D-04	7.5570D 01	2.2973D-03	1.2146D-01	4.3081D-02
1.0098D 04	2.3022D-04	7.5914D 01	2.4345D-03	1.2449D-01	4.3288D-02
1 0392D 04	2.2472D-04	7.6249D 01	2.5801D-03	1.2760D-01	4.3486D-02
1.0696D 04	2 1930D-04	7.6575D 01	2.7346D-03	1.3079D-01	4.3674D-02
1.1008D 04	2.1396D-04	7.6893D 01	2.8985D-03	1.3407D-01	4.3853D-02
1 13290 04	2.0870D-04	7.7202D 01	3.0723D-03	1.3743D-01	4.4022D-02
1 1660D 04	2 0352D-04	7.7502D 01	3.2567D-03	1.4088D-01	4.4183D-02
1 2000D 04	1 9843D-04	7.7793D 01	3.4524D-03	1.4442D-01	4.4334D-02

Sample 3 - Tabulation of Bearing Data (continued)

LOAD AND DYNAMIC COEFFICIENTS ARE ADJUSTED FOR L/D = 0 6667

RPM	K-XX	B-XX	K-XY	B-XY	K-YX	B-YX	K-YY	B-YY
9.000D 03	9.887D 05	7.148D 03	3.558D 06	1.884D 03	-2.639D 06	1.884D 03	1 588D 06	5.563D 03
9.263D 03	9.796D 05	7.069D 03	3.614D 06	1.831D 03	-2.717D 06	1.831D 03	1.590D 06	5.528D 03
9.533D 03	9.709D 05	6.994D 03	3.672D 06	1.779D 03	-2.796D 06	1.779D 03	1.591D 06	5.494D 03
9.811D 03	9.626D 05	6.923D 03	3.733D 06	1.729D 03	-2.878D 06	1 729D 03	1.592D 06	5 462D 03
1.010D 04	9.548D 05	6.855D 03	3.797D 06	1.681D 03	-2.962D 06	1.681D 03	1.592D 06	5.431D 03
1.039D 04	9.474D 05	6.790D 03	3.864D 06	1.635D 03	-3.049D 06	1.635D 03	1.593D 06	5.402D 03
1.070D 04	9.404D 05	6.729D 03	3.934D 06	1 590D 03	-3.138D 06	1 590D 03	1.594D 06	5.375D 03
1.101D 04	9.338D 05	6.671D 03	4.006D 06	1.547D 03	-3.230D 06	1.547D 03	1.595D 06	5.349D 03
1.133D 04	9.276D 05	6.616D 03	4.082D 06	1.505D 03	-3 324D 06	1 505D 03	1 596D 06	5.325D 03
1.166D 04	9.218D 05	6.563D 03	4.161D 06	1.465D 03	-3.421D 06	1.465D 03	1.596D 06	5 302D 03
1.200D 04	9 164D 05	6.513D 03	4.243D 06	1.426D 03	-3.521D 06	1.426D 03	1 597D 06	5.280D 03

**********SYNCH BRG CHARACTERISTICS**********				STABILITY PARAMETERS	
RPM	MIN STIFF	MIN DAMP	MAJ STIFF	MAJ DAMP	CR MASS	F RATIO
9.0000D 03	1.1247D 06	1.0577D 00	1.4524D 06	3.3051D 00	1.0641D 04	5.3794D-01
9.2627D 03	1.1296D 06	1.0803D 00	1 4395D 06	3.3963D 00	1.0650D 04	5.3809D-01
9.5330D 03	1.1343D 06	1.1038D 00	1.4271D 06	3.4905D 00	1.0660D 04	5.3822D-01
9.8112D 03	1.1390D 06	1.1280D 00	1.4152D 06	3.5877D 00	1.0669D 04	5.3833D-01
1.0098D 04	1.1435D 06	1.1531D 00	1.4038D 06	3.6880D 00	1.0679D 04	5.3843D-01
1.0392D 04	1.1478D 06	1.1791D 00	1.3929D 06	3 7915D 00	1.0690D 04	5.3851D-01
1.0696D 04	1.1521D 06	1.2061D 00	1.3825D 06	3.8981D 00	1.0700D 04	5.3857D-01
1.1008D 04	1.1562D 06	1.2340D 00	1.3725D 06	4.0082D 00	1 0711D 04	5.3862D-01
1.1329D 04	1.1602D 06	1.2630D 00	1.3630D 06	4.1216D 00	1.0723D 04	5.3864D-01
1 1660D 04	1.1640D 06	1.2929D 00	1.3540D 06	4.2382D 00	1 0733D 04	5.3869D-01
1.2000D 04	1.1677D 06	1.3240D 00	1.3453D 06	4.3587D 00	1.0745D 04	5.3868D-01

SAMPLE 3

DATA LINES IN RSVP FORMAT

```
1.164D 06 8.760D 03 3.001D 06 2.854D 03-1.747D 06 2.854D 03 1.566D 06 6.219D 03
1.142D 06 8.548D 03 3.040D 06 2.737D 03-1.822D 06 2.737D 03 1.569D 06 6.141D 03
1.122D 06 8.350D 03 3.082D 06 2.625D 03-1.899D 06 2.625D 03 1.572D 06 6.066D 03
1.102D 06 8.163D 03 3.128D 06 2.517D 03-1.980D 06 2.517D 03 1.574D 06 5.993D 03
1.084D 06 7.989D 03 3.177D 06 2.414D 03-2.064D 06 2.414D 03 1.576D 06 5.923D 03
1.066D 06 7.824D 03 3.230D 06 2.315D 03-2.150D 06 2.315D 03 1.579D 06 5.856D 03
1.049D 06 7.671D 03 3.287D 06 2.221D 03-2.241D 06 2.221D 03 1.581D 06 5.792D 03
1.032D 06 7.526D 03 3 348D 06 2.131D 03-2.335D 06 2.131D 03 1.583D 06 5.730D 03
1.017D 06 7.392D 03 3.413D 06 2.044D 03-2.432D 06 2.044D 03 1.585D 06 5.671D 03
1.002D 06 7.265D 03 3.483D 06 1.962D 03-2.534D 06 1.962D 03 1.587D 06 5.616D 03
9.887D 05 7.148D 03 3.558D 06 1.884D 03-2.639D 06 1.884D 03 1.588D 06 5.563D 03
9 887D 05 7.148D 03 3.558D 06 1.884D 03-2.639D 06 1.884D 03 1.588D 06 5.563D 03
9 796D 05 7.069D 03 3 614D 06 1.831D 03-2.717D 06 1.831D 03 1.590D 06 5.528D 03
9.709D 05 6.994D 03 3.672D 06 1.779D 03-2.796D 06 1.779D 03 1.591D 06 5.494D 03
9.626D 05 6 923D 03 3.733D 06 1.729D 03-2.878D 06 1.729D 03 1.592D 06 5.462D 03
9.548D 05 6.855D 03 3.797D 06 1.681D 03-2.962D 06 1.681D 03 1.592D 06 5.431D 03
9.474D 05 6.790D 03 3.864D 06 1.635D 03-3.049D 06 1.635D 03 1.593D 06 5.402D 03
9.404D 05 6.729D 03 3.934D 06 1.590D 03-3.138D 06 1.590D 03 1.594D 06 5.375D 03
9.338D 05 6.671D 03 4.006D 06 1.547D 03-3.230D 06 1.547D 03 1.595D 06 5.349D 03
9 276D 05 6.616D 03 4.082D 06 1.505D 03-3.324D 06 1.505D 03 1.596D 06 5.325D 03
9 218D 05 6.563D 03 4.161D 06 1.465D 03-3.421D 06 1.465D 03 1.596D 06 5.302D 03
9 164D 05 6.513D 03 4.243D 06 1.426D 03-3.521D 06 1.426D 03 1.597D 06 5.280D 03
```

SAMPLE 4

RECORD OF INTERACTIVE SESSION

```
ENTER DATA TABLE NAME: PJ-05-1
ENTER OUTPUT FILE NAME: OUTPUT

SELECT:   (1) PREPARE DATA FOR RSVP INPUT
          (2) DIMENSIONAL TABLE
          (3) DIMENSIONLESS TABLE
          (4) QUIT
1

SELECT:   (1) SYNCH FREQ, OR
          (2) ASYNCH FREQ?
1
ENTER BEARING LENGTH (IN)
1.0
ENTER BEARING DIAMETER (IN)
1.5
ENTER BEARING CLEARANCE (IN)
0.001
ENTER VISCOSITY (CENTI-POISE)
40.0
ENTER BEARING LOAD (LBS)
750.0
ENTER BEARING COEFS FILE NAME: RSVP
SELECT:   (1) USE DEFAULT L/D =     0.5000
          (2) ADJUST DATA FOR L/D =     0.6667
2

SELECT:   (1) LOAD VECTOR IN VERTICAL PLANE, OR
          (2) INCLINED LOAD VECTOR?
2
     ENTER LOAD INCLINATION ANGLE (DEG)?
30.0

SELECT:  (1) RIGID FOUNDATION
         (2) ISOTROPIC FOUNDATION COMPLIANCE, OR
         (3) ANISOTROPIC FOUNDATION COMPLIANCE?
1
ENTER LOWEST SPEED (RPM)
6000.0
ENTER HIGHEST SPEED (RPM)
9000.0
ENTER NUMBER OF SPEED POINTS (NOT MORE THAN 11)
11

 SELECT - (1) ANOTHER SPEED GROUP
          (2) QUIT
1
ENTER LOWEST SPEED (RPM)
9000.0
ENTER HIGHEST SPEED (RPM)
12000.0
ENTER NUMBER OF SPEED POINTS (NOT MORE THAN 11)
```

Sample 4 - Record of Interactive Session (continued)

```
 11
 SELECT - (1) ANOTHER SPEED GROUP
          (2) QUIT
 1
 ENTER LOWEST SPEED (RPM)
 12000.0
 ENTER HIGHEST SPEED (RPM)
 15000.0
 ENTER NUMBER OF SPEED POINTS (NOT MORE THAN 11)
 5
 SELECT - (1) ANOTHER SPEED GROUP
          (2) QUIT
 2
```

RETRIEVAL FILE NO PJ-05-1
FILE SIZE = 17
L/D = 0 5000
ALFA = 1 1250

SAMPLE 4

TABULATION OF BEARING DATA

L (IN)	DIA (IN)	C (IN)	VISC (CP)	W (LBS)	SPEED RANGE (RPM)	
1 0000	1.5000	0 001000	4 0000 01	750 00	6000 00 TO 9000 00	11 PTS

LOAD PARAMETER IS ADJUSTED FOR L/D = 0 6667

RPM	ECC(IN)	ATT ANGLE	FRICT(HP)	Q-REQ(GPM)	Q-LOST(GPM)
6 0000D 03	3 4171D-04	6 8805D 01	8.6080D-04	8 0048D-02	3 8200D-02
6 2483D 03	3 3232D-04	6.9402D 01	9 3257D-04	8 2827D-02	3 8685D-02
6 5068D 03	3 2302D-04	6.9994D 01	1 0105D-03	8 5705D-02	3 9156D-02
6 7761D 03	3 1383D-04	7.0582D 01	1 0951D-03	8 8686D-02	3 9614D-02
7 0565D 03	3 0476D-04	7 1164D 01	1 1871D-03	9 1775D-02	4 0059D-02
7 3485D 03	2 9581D-04	7 1741D 01	1 2869D-03	9 4976D-02	4 0489D-02
7 6525D 03	2 8698D-04	7 2312D 01	1.3953D-03	9 8294D-02	4.0905D-02
7 9692D 03	2 7829D-04	7.2873D 01	1 5130D-03	1 0173D-01	4 1305D-02
8 2990D 03	2 6972D-04	7 3425D 01	1.6410D-03	1 0530D-01	4 1688D-02
8 6424D 03	2 6128D-04	7 3966D 01	1 7799D-03	1 0899D-01	4 2054D-02
9.0000D 03	2 5298D-04	7 4494D 01	1 9309D-03	1 1283D-01	4 2402D-02

LOAD AND DYNAMIC COEFFICIENTS ARE ADJUSTED FOR L/D = 0 6667

RPM	K-XX	B-XX	K-XY	B-XY	K-YX	B-YX	K-YY	B-YY
6 0000D 03	7 213D 05	5.653D 03	2.513D 06	2 [illegible]77D 03-2	2350 06	2 5270 03	2 009D 06	9 326D 03
6 248D 03	7.216D 05	5.576D 03	2.551D 06	2.411D 03-2	3110 06	2 4110 03	1.990D 06	9 113D 03
6.507D 03	7 222D 05	5 506D 03	2.592D 06	2 301D 03-2	3900 06	2 3010 03	1 971D 06	8 910D 03
6 776D 03	7.233D 05	5.441D 03	2 636D 06	2 198D 03-2	4710 06	2 1980 03	1 953D 06	8.716D 03
7.056D 03	7 248D 05	5 382D 03	2 685D 06	2 101D 03-2	5550 06	2 1010 03	1 935D 06	8 531D 03
7 348D 03	7 266D 05	5.327D 03	2.738D 06	2 010D 03-2	6420 06	2 0100 03	1 918D 06	8.353D 03
7 653D 03	7 288D 05	5.277D 03	2.795D 06	1 924D 03-2	7330 06	1 9240 03	1 901D 06	8.185D 03
7 969D 03	7 313D 05	5 232D 03	2.856D 06	1 843D 03-2	8260 06	1 9430 03	1 884D 06	8 024D 03
8 299D 03	7 341D 05	5.191D 03	2 922D 06	1 767D 03-2	9230 06	1 7670 03	1 868D 06	7 872D 03
8 642D 03	7 374D 05	5 154D 03	2 993D 06	1 695D 03-3	0240 06	1 695D 03	1 852D 06	7.727D 03
9 000D 03	7.409D 05	5 120D 03	3 068D 06	1 628D 03-3	1280 06	1 6280 03	1 836D 06	7 591D 03

Sample 4 - Tabulation of Bearing Data (continued)

RPM	MIN STIFF	MIN DAMP	MAJ STIFF	MAJ DAMP	STABILITY PARAMETERS CR MASS	F RATIO
6.0000D 03	1.0465D 06	8.0264D-01	1.6836D 06	2.2963D 00	1.0474D 04	5 3542D-01
6.2483D 03	1.0549D 06	8.2390D-01	1 6566D 06	2.3764D 00	1.0495D 04	5.3568D-01
6.5068D 03	1.0632D 06	8.4597D-01	1.6304D 06	2.4606D 00	1.0516D 04	5.3592D-01
6.7761D 03	1.0714D 06	8.6888D-01	1.6052D 06	2.5492D 00	1 0535D 04	5.3618D-01
7.0565D 03	1.0795D 06	8.9272D-01	1' 5806D 06	2.6423D 00	1 0554D 04	5.3641D-01
7.3485D 03	1.0875D 06	9.1742D-01	1 5570D 06	2.7401D 00	1.0571D 04	5.3668D-01
7.6525D 03	1.0953D 06	9.4311D-01	1 5342D 06	2.8427D 00	1.0586D 04	5.3695D-01
7.9692D 03	1.1029D 06	9.6989D-01	1.5123D 06	2.9503D 00	1.0600D 04	5.3722D-01
8.2990D 03	1.1104D 06	9.9786D-01	1.4913D 06	3.0631D 00	1.0614D 04	5.3748D-01
8.6424D 03	1.1177D 06	1.0271D 00	1.4714D 06	3.1813D 00	1.0627D 04	5.3772D-01
9.0000D 03	1.1247D 06	1.0577D 00	1.4524D 06	3.3051D 00	1 0641D 04	5 3794D-01

LOAD PARAMETER IS ADJUSTED FOR L/D = 0.6667

RPM	ECC(IN)	ATT ANGLE	FRICT(HP)	Q-REQ(GPM)	Q-LOST(GPM)
9.0000D 03	2.5298D-04	7 4494D 01	1.9309D-03	1 1283D-01	4 2402D-02
9.2627D 03	2.4718D-04	7.4860D 01	2.0459D-03	1 1563D-01	4 2638D-02
9.5330D 03	2.4145D-04	7.5219D 01	2.1679D-03	1 1851D-01	4 2864D-02
9.8112D 03	2.3580D-04	7.5570D 01	2.2973D-03	1 2146D-01	4.3081D-02
1.0098D 04	2.3022D-04	7.5914D 01	2.4345D-03	1.2449D-01	4.3288D-02
1.0392D 04	2.2472D-04	7.6249D 01	2.5801D-03	1 2760D-01	4.3486D-02
1.0696D 04	2.1930D-04	7.6575D 01	2.7346D-03	1 3079D-01	4 3674D-02
1.1008D 04	2 1396D-04	7.6893D 01	2.8985D-03	1 3407D-01	4 3853D-02
1 1329D 04	2 0870D-04	7.7202D 01	3.0723D-03	1 3743D-01	4.4022D-02
1 1660D 04	2.0352D-04	7.7502D 01	3 2567D-03	1 4088D-01	4 4183D-02
1.2000D 04	1.9843D-04	7.7793D 01	3.4524D-03	1 4442D-01	4.4334D-02

Sample 4 - Tabulation of Bearing Data (continued)

LOAD AND DYNAMIC COEFFICIENTS ARE ADJUSTED FOR L/D = 0 6667

RPM	K-XX	B-XX	K-XY	B-XY	K-YX	B-YX	K-YY	B-YY
9.0000D 03	7 4090 05	5.1200D 03	3 0680 06	1 6280 03	-3 1280 06	1.6280 03	1 8360 06	7.5910 03
9.2630 03	7.4360 05	5 0980 03	3.1250 06	1 5830 03	-3 2050 06	1 5830 03	1.8250 06	7.4980 03
9.5330 03	7.4650 05	5.0700 03	3.1850 06	1.5390 03	-3.2830 06	1.5390 03	1.8150 06	7.4100 03
9.8110 03	7.4950 05	5.0600 03	3.2470 06	1.4970 03	-3 3640 06	1 4970 03	1.8050 06	7.3250 03
1.0100 04	7.5260 05	5.0430 03	3.3120 06	1.4570 03	-3 4470 06	1 4570 03	1 7950 06	7.2430 03
1.0390 04	7.5590 05	5.0270 03	3.3800 06	1.4180 03	-3 5320 06	1.4180 03	1.7850 06	7.1650 03
1.0700 04	7.5930 05	5.0130 03	3.4520 06	1.3810 03	-3.6200 06	1.3810 03	1.7750 06	7.0910 03
1.1010 04	7.6280 05	5.0010 03	3.5260 06	1 3460 03	-3 7100 06	1.3460 03	1.7660 06	7.0190 03
1.1330 04	7.6640 05	4.9890 03	3.6030 06	1.3120 03	-3.8030 06	1.3120 03	1 7570 06	6 9510 03
1.1660 04	7.7000 05	4.9790 03	3.6840 06	1.2790 03	-3 8980 06	1.2790 03	1.7480 06	6.8850 03
1.2000 04	7.7380 05	4.9700 03	3.7680 06	1.2470 03	-3.9960 06	1 2470 03	1.7390 06	6.8230 03

81

RPM	MIN STIFF	MIN DAMP	MAJ STIFF	MAJ DAMP	STABILITY PARAMETERS CR MASS	F RATIO
9.0000D 03	1.1247D 06	1.0577D 00	1.4524D 06	3.3051D 00	1.0641D 04	5.3794D-01
9.2627D 03	1.1296D 06	1 0803D 00	1.4395D 06	3.3963D 00	1 0650D 04	5.3809D-01
9.5330D 03	1.1343D 06	1.1038D 00	1 4271D 06	3.4905D 00	1.0660D 04	5.3822D-01
9.8112D 03	1.1390D 06	1.1280D 00	1 4152D 06	3.5877D 00	1.0669D 04	5.3833D-01
1.0098D 04	1.1435D 06	1.1531D 00	1 4038D 06	3.6880D 00	1.0679D 04	5.3843D-01
1.0392D 04	1.1478D 06	1.1791D 00	1 3929D 06	3.7915D 00	1.0690D 04	5.3851D-01
1.0696D 04	1.1521D 06	1.2061D 00	1.3825D 06	3.8981D 00	1.0700D 04	5.3857D-01
1.1008D 04	1.1562D 06	1.2340D 00	1.3725D 06	4.0082D 00	1 0711D 04	5.3862D-01
1.1329D 04	1.1602D 06	1.2630D 00	1.3630D 06	4.1216D 00	1.0723D 04	5.3864D-01
1.1660D 04	1.1640D 06	1.2929D 00	1.3540D 06	4.2382D 00	1.0733D 04	5.3869D-01
1.2000D 04	1.1677D 06	1.3240D 00	1 3453D 06	4.3587D 00	1.0745D 04	5.3868D-01

Sample 4 - Tabulation of Bearing Data (continued)

L (IN)	DIA (IN)	C (IN)	VISC (CP)	W (LBS)	SPEED RANGE (RPM)	
1.0000	1.5000	0.001000	4.0000 01	750.00	12000.00 TO 15000.00	5 PTS

LOAD PARAMETER IS ADJUSTED FOR L/D = 0.6667

RPM	ECC(IN)	ATT ANGLE	FRICT(HP)	Q-REQ(GPM)	Q-LOST(GPM)
1.2000D 04	1.9843D-04	7.7793D 01	3.4524D-03	1.4442D-01	4.4334D-02
1.2668D 04	1.8882D-04	7.8336D 01	3.8664D-03	1.5156D-01	4.4605D-02
1.3416D 04	1.7957D-04	7.8857D 01	4.3304D-03	1.5909D-01	4.4852D-02
1.4186D 04	1.7070D-04	7.9361D 01	4.8505D-03	1.6703D-01	4.5079D-02
1.5000D 04	1.6220D-04	7.9853D 01	5.4332D-03	1.7542D-01	4.5291D-02

LOAD AND DYNAMIC COEFFICIENTS ARE ADJUSTED FOR L/D = 0.6667

RPM	K-XX	B-XX	K-XY	B-XY	K-YX	B-YX	K-YY	B-YY
1.2000D 04	7.7380D 05	4.9700D 03	3.7680D 06	1.2470D 03	-3.9960D 06	1.2470D 03	1.7390D 06	6.8230D 03
1.2690D 04	7.8110D 05	4.9560D 03	3.9400D 06	1.1890D 03	-4.1940D 06	1.1890D 03	1.7230D 06	6.7090D 03
1.3420D 04	7.8840D 05	4.9450D 03	4.1260D 06	1.1360D 03	-4.4040D 06	1.1360D 03	1.7070D 06	6.6040D 03
1.4190D 04	7.9560D 05	4.9370D 03	4.3250D 06	1.0870D 03	-4.6260D 06	1.0870D 03	1.6930D 06	6.5050D 03
1.5000D 04	8.0240D 05	4.9310D 03	4.5390D 06	1.0430D 03	-4.8610D 06	1.0430D 03	1.6780D 06	6.4120D 03

**********SYNCH BRG CHARACTERISTICS**********				STABILITY PARAMETERS	
RPM	MIN STIFF	MIN DAMP	MAJ STIFF	MAJ DAMP	CP MASS	F RATIO
1.2000D 04	1.1677D 06	1.3240D 00	1.3453D 06	4.3587D 00	1.0745D 04	5.3868D-01
1.2668D 04	1.1746D 06	1.3875D 00	1.3296D 06	4.6032D 00	1.0768D 04	5.3864D-01
1.3416D 04	1.1809D 06	1.4549D 00	1.3150D 06	4.8629D 00	1.0788D 04	5.3862D-01
1.4186D 04	1.1868D 06	1.5264D 00	1.3013D 06	5.1392D 00	1.0804D 04	5.3865D-01
1.5000D 04	1.1922D 06	1.6018D 00	1.2883D 06	5.4330D 00	1.0814D 04	5.3876D-01

SAMPLE 4

DATA LINES IN RSVP FORMAT

```
7 2130 05 5.653D 03 2.513D 06 2.527D 03-2.235D 06 2.527D 03 2.009D 06 9.326D 03
7.216D 05 5.576D 03 2.551D 06 2.411D 03-2.311D 06 2.411D 03 1.990D 06 9.113D 03
7.222D 05 5.506D 03 2.592D 06 2.301D 03-2.390D 06 2 301D 03 1.971D 06 8.910D 03
7.233D 05 5.441D 03 2.636D 06 2.198D 03-2.471D 06 2.198D 03 1.953D 06 8.716D 03
7.248D 05 5.382D 03 2.685D 06 2.101D 03-2.555D 06 2.101D 03 1.935D 06 8.531D 03
7.266D 05 5.327D 03 2.738D 06 2.010D 03-2.642D 06 2.010D 03 1.918D 06 8.353D 03
7.288D 05 5.277D 03 2.795D 06 1.924D 03-2 733D 06 1.924D 03 1.901D 06 8.185D 03
7.313D 05 5.232D 03 2.856D 06 1.843D 03-2.826D 06 1.843D 03 1.884D 06 8.024D 03
7.341D 05 5.191D 03 2.922D 06 1.767D 03-2.923D 06 1.767D 03 1.868D 06 7.872D 03
7.374D 05 5.154D 03 2.993D 06 1.695D 03-3.024D 06 1.695D 03 1.852D 06 7.727D 03
7.409D 05 5.120D 03 3.068D 06 1.628D 03-3.128D 06 1.628D 03 1.836D 06 7.591D 03
7.409D 05 5.120D 03 3.068D 06 1.628D 03-3.128D 06 1.628D 03 1.836D 06 7.591D 03
7.436D 05 5.098D 03 3.125D 06 1.583D 03-3.205D 06 1.583D 03 1.825D 06 7.498D 03
7.465D 05 5.078D 03 3.185D 06 1.539D 03-3.283D 06 1.539D 03 1.815D 06 7.410D 03
7.495D 05 5.060D 03 3.247D 06 1.497D 03-3.364D 06 1.497D 03 1.805D 06 7.325D 03
7.526D 05 5.043D 03 3.312D 06 1.457D 03-3.447D 06 1.457D 03 1.795D 06 7.243D 03
7.559D 05 5.027D 03 3.380D 06 1.418D 03-3.532D 06 1.418D 03 1.785D 06 7.165D 03
7.593D 05 5.013D 03 3.452D 06 1.381D 03-3.620D 06 1.381D 03 1.775D 06 7.091D 03
7.628D 05 5.001D 03 3.526D 06 1.346D 03-3.710D 06 1 346D 03 1.766D 06 7.019D 03
7.664D 05 4.989D 03 3.603D 06 1.312D 03-3.803D 06 1.312D 03 1.757D 06 6.951D 03
7.700D 05 4.979D 03 3.684D 06 1.279D 03-3.898D 06 1.279D 03 1.748D 06 6.885D 03
7.738D 05 4.970D 03 3.768D 06 1.247D 03-3.996D 06 1.247D 03 1.739D 06 6.823D 03
7.738D 05 4.970D 03 3.768D 06 1.247D 03-3.996D 06 1.247D 03 1.739D 06 6.823D 03
7.811D 05 4.956D 03 3.940D 06 1.189D 03-4.194D 06 1.189D 03 1.723D 06 6.709D 03
7.884D 05 4.945D 03 4.126D 06 1.136D 03-4.404D 06 1.136D 03 1.707D 06 6.604D 03
7.956D 05 4.937D 03 4.325D 06 1.087D 03-4.626D 06 1.087D 03 1.693D 06 6.505D 03
8.024D 05 4.931D 03 4.538D 06 1.043D 03-4.861D 06 1.043D 03 1.678D 06 6.412D 03
```

SAMPLE 5

RECORD OF INTERACTIVE SESSION

```
ENTER DATA TABLE NAME: PJ-05-1
ENTER OUTPUT FILE NAME: OUTPUT

SELECT:   (1) PREPARE DATA FOR RSVP INPUT
          (2) DIMENSIONAL TABLE
          (3) DIMENSIONLESS TABLE
          (4) QUIT
1

SELECT:   (1) SYNCH FREQ, OR
          (2) ASYNCH FREQ?
2
     ENTER NUMBER OF FREQ GROUPS?
2
ENTER BEARING LENGTH (IN)
1.0
ENTER BEARING DIAMETER (IN)
2.0
ENTER BEARING CLEARANCE (IN)
0.001
ENTER VISCOSITY (CENTI-POISE)
40.0
ENTER BEARING LOAD (LBS)
800.0
ENTER BEARING COEFS FILE NAME: RSVP

SELECT:   (1) LOAD VECTOR IN VERTICAL PLANE, OR
          (2) INCLINED LOAD VECTOR?
1

SELECT:   (1) RIGID FOUNDATION
          (2) ISOTROPIC FOUNDATION COMPLIANCE, OR
          (3) ANISOTROPIC FOUNDATION COMPLIANCE?
1
ENTER LOWEST SPEED (RPM)
7500.0
ENTER HIGHEST SPEED (RPM)
7500.0
ENTER NUMBER OF SPEED POINTS (NOT MORE THAN 11)
1
     ENTER FREQ DATA (HZ) FOR FREQ GROUP    1 AT  7.5000D 03 RPM
          LOWEST FREQ?
25.0
          HIGHEST FREQ?
50.0
          NUMBER OF FREQ POINTS?
11
     ENTER FREQ DATA (HZ) FOR FREQ GROUP    2 AT  7.5000D 03 RPM
          LOWEST FREQ?
50.0
          HIGHEST FREQ?
100.0

          LOWEST FREQ?
 2.0
          HIGHEST FREQ?
100.0
          NUMBER OF FREQ POINTS?
11

 SELECT - (1) ANOTHER SPEED GROUP
          (2) QUIT
2
```

RETRIEVAL FILE NO PJ-05-1
FILE SIZE = 17
L/D = 0.5000
ALFA = 1.1250

SAMPLE 5

TABULATION OF BEARING DATA

L (IN)	DIA (IN)	C (IN)	VISC (CP)	W (LBS)	SPEED RANGE (RPM)	
1.0000	2.0000	0.001000	4.0000 01	800.00	7500.00 TO 7500.00	1 PTS

RPM	ECC(IN)	ATT ANGLE	FRICT(HP)	Q-REQ(GPM)	Q-LOST(GPM)
7.5000D 03	2.2845D-04	7.6022D 01	3.1841D-03	1.2313D-01	4.2540D-02

RPM = 7.500D 03

FREQ	K-XX	B-XX	K-XY	B-XY	K-YX	B-YX	K-YY	B-YY
5.000D 01	1.016D 06	9.905D 03	4.073D 06	2 415D 03	-3 189D 06	2.415D 03	1.699D 06	7 859D 03

ASYNCHRONOUS BEARING CHARACTERISTICS

	********** MINOR MODE **********				********** MAJOR MODE **********			
FREQUENCY	STIFFNESS	CR DAMP	ELLIPTIC	ORIENT	STIFFNESS	CR DAMP	ELLIPTIC	ORIENT
5.000D 01	1.296D 06	-3.438D-01	8.879D-01	1.428D 02	1.419D 06	2.281D 00	-6.904D-01	2.786D 01
5.359D 01	1.292D 06	-2.728D-01	8.766D-01	1.406D 02	1.423D 06	2.349D 00	-6 797D-01	2.813D 01
5.743D 01	1.288D 06	-1.965D-01	8.642D-01	1 386D 02	1 427D 06	2 423D 00	-6 684D-01	2.839D 01
6.156D 01	1.283D 06	-1.145D-01	8.506D-01	1.369D 02	1 432D 06	2.502D 00	-6.565D-01	2.864D 01
6.598D 01	1.278D 06	-2 655D-02	8.359D-01	1 355D 02	1.437D 06	2.586D 00	-6 441D-01	2 890D 01
7.071D 01	1.273D 06	6.792D-02	8.202D-01	1.342D 02	1.442D 06	2.677D 00	-6.311D-01	2 914D 01
7.579D 01	1.267D 06	1.694D-01	8.035D-01	1.331D 02	1 447D 06	2.774D 00	-6.175D-01	2.939D 01
8.123D 01	1.262D 06	2.783D-01	7.859D-01	1 321D 02	1.453D 06	2.878D 00	-6.034D-01	2.962D 01
8.706D 01	1.256D 06	3.953D-01	7.674D-01	1.312D 02	1.459D 06	2.989D 00	-5 887D-01	2.986D 01
9.330D 01	1.250D 06	5 210D-01	7.481D-01	1 304D 02	1 465D 06	3 109D 00	-5 735D-01	3 008D 01
1.000D 02	1.243D 06	6.559D-01	7.281D-01	1 297D 02	1 472D 06	3.238D 00	-5 578D-01	3.030D 01

Sample 5 - Tabulation of Bearing Data (continued)

RPM = 7.500D 03

FREQ	K-XX	B-XX	K-XY	B-XY	K-YX	B-YX	K-YY	B-YY
2.500D 01	1.016D 06	9.905D 03	4.073D 06	2 415D 03	-3.189D 06	2.415D 03	1.699D 06	7 859D 03

ASYNCHRONOUS BEARING CHARACTERISTICS

	********** MINOR MODE **********				********** MAJOR MODE **********			
FREQUENCY	STIFFNESS	CR DAMP	ELLIPTIC	ORIENT	STIFFNESS	CR DAMP	ELLIPTIC	ORIENT
2.500D 01	1.326D 06	-8.356D-01	9.246D-01	1.760D 02	1.389D 06	1.803D 00	-7.703D-01	2.518D 01
2.679D 01	1.324D 06	-8.005D-01	9.262D-01	1.731D 02	1.391D 06	1.837D 00	-7.643D-01	2.544D 01
2.872D 01	1.322D 06	-7.628D-01	9.272D-01	1.698D 02	1.393D 06	1.874D 00	-7.579D-01	2.571D 01
3.078D 01	1.319D 06	-7.224D-01	9.271D-01	1.662D 02	1.396D 06	1.913D 00	-7.511D-01	2.598D 01
3.299D 01	1.316D 06	-6.791D-01	9.258D-01	1 625D 02	1.398D 06	1.956D 00	-7.439D-01	2.625D 01
3.536D 01	1.314D 06	-6.326D-01	9.232D-01	1.587D 02	1.401D 06	2.001D 00	-7.362D-01	2 652D 01
3.789D 01	1.310D 06	-5.827D-01	9.192D-01	1.550D 02	1.404D 06	2.050D 00	-7.281D-01	2 679D 01
4.061D 01	1.307D 06	-5.292D-01	9.136D-01	1.515D 02	1.408D 06	2.102D 00	-7.194D-01	2.706D 01
4.353D 01	1.304D 06	-4.717D-01	9.064D-01	1.483D 02	1.411D 06	2.157D 00	-7.103D-01	2.733D 01
4.665D 01	1.300D 06	-4.100D-01	8.979D-01	1.454D 02	1.415D 06	2.217D 00	-7 006D-01	2.760D 01
5.000D 01	1.296D 06	-3.438D-01	8.879D-01	1 428D 02	1 419D 06	2.281D 00	-6.904D-01	2.786D 01

SAMPLE 5

DATA LINES IN RSVP FORMAT

```
1.016D 06 9.905D 03 4.073D 06 2.415D 03-3.189D 06 2.415D 03 1.699D 06 7.859D 03
1.016D 06 9.905D 03 4.073D 06 2.415D 03-3 189D 06 2.415D 03 1.699D 06 7.859D 03
```

SAMPLE 6

RECORD OF INTERACTIVE SESSION

```
ENTER DATA TABLE NAME [P.05-10]
ENTER OUTPUT FILE NAME [OUTPUT]

SELECT:  (1) PREPARE DATA FOR RSVP INPUT
         (2) DIMENSIONAL TABLE
         (3) DIMENSIONLESS TABLE
         (4) QUIT
1

SELECT:  (1) SYNCH FREQ. OR
         (2) ASYNCH FREQ?
2
     ENTER NUMBER OF FREQ GROUPS?
2
ENTER BEARING LENGTH (IN)
1.0
ENTER BEARING DIAMETER (IN)
2.0
ENTER BEARING CLEARANCE (IN)
0.001
ENTER VISCOSITY (CENTI-POISE)
40.0
ENTER BEARING LOAD (LBS)
800.0
ENTER BEARING COEFS FILE NAME. [RSVP]

SELECT:  (1) LOAD VECTOR IN VERTICAL PLANE, OR
         (2) INCLINED LOAD VECTOR?
1

SELECT:  (1) RIGID FOUNDATION
         (2) ISOTROPIC FOUNDATION COMPLIANCE, OR
         (3) ANISOTROPIC FOUNDATION COMPLIANCE?
2

SELECT:  (1) RADIAL BEARING, OR
         (2) ANGULAR BEARING?
1
     ENTER PEDESTAL WEIGHT (LB)?
0.0
     ENTER PEDESTAL STIFFNESS IN VERTICAL PLANE?
     (LB/IN) FOR RADIAL BRG, OR (IN-LB/RAD) FOR ANG BR
1.0D+05
     ENTER PEDESTAL DAMPING IN VERTICAL PLANE?
     (LB-SEC/IN) FOR RAD BRG, OR (IN-LB-SEC/RAD) FOR ANG BRG
0.0
```

Sample 6 - Record of Interactive Session (continued)

```
ENTER LOWEST SPEED (RPM)
? 500
ENTER HIGHEST SPEED (RPM)
? 5
ENTER NUMBER OF FREQ POINTS (NOT MORE THAN 11)

      ENTER FREQ DATA (HZ) FOR FREQ GROUP    1 AT  7.50000 03 RPM
            LOWEST FREQ?
10 0
            HIGHEST FREQ?
50 0
            NUMBER OF FREQ POINTS?
? 1
      ENTER FREQ DATA (HZ) FOR FREQ GROUP    2 AT  7.50000 03 RPM
            LOWEST FREQ?
50 1
            HIGHEST FREQ?
100 0
            NUMBER OF FREQ POINTS?
? 11

 SELECT - (1) ANOTHER SPEED GROUP
          (2) QUIT
? 2
```

Best Available Copy

SAMPLE 6

RETRIEVAL FILE NO PJ-05-1
FILE SIZE = 17
L/D = 0.5000
ALFA = 1.1250

TABULATION OF BEARING DATA

L (IN)	DIA (IN)	C (IN)	VISC (CP)	W (LBS)	SPEED RANGE (RPM)	
1.0000	2.0000	0.001000	4.9000 01	300.00	7500.00 TO 7500.00	1 PTS

RPM	ECC(IN)	ATT ANGLE	FRICT(HP)	Q-REQ(GPM)	Q-LOST(GPM)
7.5000 03	2.2845D-04	7.6022D 01	3.1841D-03	1.2313D-01	4.2540D-02

RPM = 7.5000 03

FREQ	X-XX	X-XY	X-YY	Y-XY	Y-YY	B-YX	K-YY	B-YY
1 0000 01	9.3785 04-3	2.2740 00	2.7490 03-2	2.9280 00-2	2.1340 03	5.1880 00	9.9210 04-5	.4130 00
1 1750 01	9.3740 04-3	2.2690 00	2.7620 03-2	2.9710 00-2	2.1360 03	5.2310 00	9.9190 04-5	.4200 00
1 3500 01	9.3710 04-3	2.2610 00	2.7790 03-2	3.0310 00-2	2.1390 03	5.2890 00	9.9160 04-5	.4300 00
1 5250 01	9.3680 04-3	2.2490 00	2.8030 03-2	3.1150 00-2	2.1420 03	5.3720 00	9.9120 04-5	.4410 00
1 7000 01	9.3630 04-3	2.2300 00	2.8350 03-2	3.2350 00-2	2.1460 03	5.4870 00	9.9060 04-5	.4540 00
1 8750 01	9.3560 04-3	2.1970 00	2.8790 03-2	3.4080 00-2	2.1480 03	5.6490 00	9.8980 04-5	.4660 00
2 0500 01	9.3460 04-3	2.1390 00	2.9380 03-2	3.6580 00-2	2.1460 03	5.8790 00	9.8860 04-5	.4690 00
2 2250 01	9.3310 04-3	2.0310 00	3.0130 03-2	4.0290 00-2	2.1310 03	6.2050 00	9.8690 04-5	.4430 00
2 4000 01	9.3090 04-2	1.8200 00	3.1000 03-2	4.5860 00-2	2.0810 03	6.6640 00	9.8410 04-5	.3390 00
2 5750 01	9.2750 04-2	1.3890 00	3.1730 03-2	5.4270 00-1	1.9450 03	7.2840 00	9.7970 04-5	.0270 00
2 7500 01	9.2270 04-1	4.4950 00	3.1310 03-2	6.6430 00-1	1.5940 03	8.0630 00	9.7300 04-4	.1940 00

SYNCHRONOUS BEARING CHARACTERISTICS

	MINOR MODE				MAJOR MODE			
FREQUENCY	STIFFNESS	CR DAMP	ELLIPTIC	ORIENT	STIFFNESS	CR DAMP	ELLIPTIC	ORIENT
1 0000 01	9.2735 04-1	3.3610-02	8.8940-01	1.9330 02	9.9240 04	1.0790-02-8	.2170-01	2.0220 02
1 1750 01	9.2450 04-1	3.3900-02	9.1490-01	1.9260 02	9.9270 04	1.0580-02-8	.1570-01	2.2620 01
1 3500 01	9.2170 04-1	3.4250-02	9.4080-01	1.9020 02	9.9310 04	1.0350-02-8	.0860-01	2.3110 01
1 5250 01	9.1880 04-1	3.4720-02	9.6740-01	1.8780 02	9.9340 04	1.0090-02-8	.0020-01	2.3630 01
1 7000 01	9.1570 04-1	3.5190-02	9.9430-01	1.8460 02	9.9361 04	9.7950-03-7	.9050-01	2.4180 01
1 8750 01	9.1230 04-1	3.5800-02	9.2090-01	1.8010 02	9.9380 04	9.4720-03-7	.7920-01	2.4760 01
2 0500 01	9.0860 04-1	3.6520-02	9.5050-01	1.7400 02	9.9371 04	9.1120-03-7	.6610-01	2.5360 01
2 2250 01	9.0450 04-1	3.7320-02	9.8270-01	1.6610 02	9.9311 04	8.7170-03-7	.5060-01	2.5980 01
2 4000 01	8.9970 04-1	3.8190-02	9.1990-01	1.5740 02	9.9140 04	8.3010-03-7	.3340-01	2.6610 01
2 5750 01	8.9410 04-1	3.9140-02	9.5970-01	1.4930 02	9.8811 04	7.8720-03-7	.1730-01	2.7240 01
2 7500 01	8.8810 04-1	4.0110-02	9.9790-01	1.4250 02	9.8421 04	7.4451-03-7	.0240-01	2.7860 01

Sample 6 - Tabulation of Bearing Data (continued)

RPM = 7 500D HZ

FREQ	K-XX	B-XX	K-XY	B-XY	K-YX	B-YX	K-YY	B-YY
5 000D 01	9 727D 04-1	485D 00	3 131D 03-6	847D 00-1	594D 03	8 003D 00	9 730D 04-4	194D 00
5 359D 01	9.702D 04-8	474D-01	3.016D 03-7	259D 00-1	319D 03	8 254D 00	9 694D 04-3.528D	00
5 743D 01	9 679D 04-1	473D-02	2.794D 03-7	861D 00-9	344D 02	9 366D 00	9 654D 04-2.592D	00
6.156D 01	9 661D 04 1	006D 00	2.427D 03-8	332D 00-4	320D 02	8 219D 00	9 618D 04-1.356D	00
6.598D 01	9 656D 04 2	133D 00	1 900D 03-8	507D 00 1	630D 02	7 691D 00	9 594D 04 1	199D-01
7 071D 01	9.668D 04 3	190D 00	1 251D 03-8	235D 00 7	723D 02	6 732D 00	9 590D 04 1	647D 00
7 579D 01	9 700D 04 3	964D 00	5 802D 02-7	425D 00 1	284D 03	5 443D 00	9 611D 04 2.947D	00
8.123D 01	9.745D 04 4.329D	00	4.245D 00-6	397D 00 1	611D 03	4.056D 00	9.653D 04 3.798D	00
8.706D 01	9 794D 04 4	304D 00-4.058D	02-5	204D 00 1	778D 03	2 803D 00	9 706D 04 4.155D	00
9.330D 01	9 839D 04 4	013D 00-6	460D 02-4	097D 00 1	710D 03	1 811D 00	9 759D 04 4.121D	00
1 000D 02	9.876D 04 3.591D	00-7.537D	02-3	170D 00 1	588D 03	1 094D 00	9 806D 04 3.850D	00

ASYNCHRONOUS BEARING CHARACTERISTICS

	**********MINOR MODE**********				**********MAJOR MODE**********			
FREQUENCY	STIFFNESS	CR DAMP	ELLIPTIC	ORIENT	STIFFNESS	CR DAMP	ELLIPTIC	ORIENT
5 000D 01	9.491D 04-1	711D-02	8 879D-01	1 428D 02	9 966D 04	7 348D-03-6	904D-01	2 786D 01
5 359D 01	9.428D 04-1	535D-02	8 766D-01	1 406D 02	9 968D 04	7 133D-03-6	797D-01	2.081D 02
5.743D 01	9 364D 04-1	238D-02	8 642D-01	1 386D 02	9 970D 04	6 914D-03-6	684D-01	2.084D 02
6 156D 01	9 308D 04-7	897D-03	8 506D-01	1 369D 02	9 971D 04	6 693D-03-6	565D-01	2 086D 02
6 598D 01	9 276D 04-1	922D-03	8 359D-01	1 355D 02	9 973D 04	6 470D-03-6.441D	-01	2 089D 02
7 071D 01	9 283D 04 4.864D	-03	8 202D-01	1 342D 02	9.975D 04	6 244D-03-6.311D	-01	2.091D 02
7 579D 01	9 334D 04 1	120D-02	8 035D-01	1 331D 02	9 977D 04	6 018D-03-6	175D-01	2 094D 02
8 123D 01	9.420D 04 1.588D	-02	7 859D-01	1 321D 02	9 979D 04	5.792D-03-6	034D-01	2.096D 02
8 706D 01	9 520D 04 1.847D	-02	7 674D-01	1 312D 02	9 980D 04	5 565D-03-5.887D	-01	2.099D 02
9.330D 01	9.616D 04 1.925D	-02	7 481D-01	1 304D 02	9 982D 04	5 340D-03-5	735D-01	2.101D 02
1 000D 02	9 699D 04 1.883D	-02	7 281D-01	1 297D 02	9 983D 04	5 116D-03-5	578D-01	2.103D 02

(Page 2 of 2)

SAMPLE 6

DATA LINES IN RSVP FORMAT

```
9 8760 04-3 2740 00 2 7490 03-2 9280 00-2.1340 03 5 1880 00 9.9210 04-5.4130 00
9 8740 04-3.2690 00 2 7620 03-2 9710 00-2 1360 03 5 2310 00 9.9190 04-5.4200 00
9 8710 04-3 2610 00 2.7790 03-3 0310 00-2 1390 03 5 2890 00 9 9160 04-5.4300 00
9 8680 04-3.2490 00 2.8030 03-3.1150 00-2 1420 03 5 3720 00 9 9120 04-5.4410 00
9 8630 04-3.2300 00 2 8350 03-3.2350 00-2 1460 03 5 4870 00 9 9060 04-5.4540 00
9.8560 04-3.1970 00 2 8790 03-3.4080 00-2 1480 03 5 6490 00 9 8980 04-5.4660 00
9.8460 04-3.1390 00 2 9380 03-3 6580 00-2 1460 03 5 8790 00 9.8860 04-5.4690 00
9 8310 04-3 0310 00 3 0130 03-4 0290 00-2 1310 03 6 2050 00 9 8690 04-5 4430 00
9 8090 04-2 8200 00 3.1000 03-4 5860 00-2 0810 03 6.6640 00 9 8410 04-5.3390 00
9 7750 04-2 3890 00 3 1730 03-5 4270 00-1 9450 03 7 2840 00 9 7970 04-5.0270 00
9 7270 04-1 4850 00 3 1310 03-6.6430 00-1 5940 03 8 0030 00 9.7300 04-4.1940 00
9 7270 04-1 4850 00 3 1310 03-6 6430 00-1 5940 03 8 0030 00 9 7300 04-4 1940 00
9 7020 04-8 4740-01 3 0160 03-7 2590 00-1 3180 03 8 2540 00 9.6940 04-3.5280 00
9 6.90 04-1 4730-02 2 7940 03-7 8610 00-9 3440 02 8 3660 00 9.6540 04-2.5920 00
9 6810 04 1 0080 00 2 4270 03-8 3320 00-4 3200 02 8 2190 00 9.6180 04-1.3560 00
9 6560 04 2 1330 00 1 9000 03-8 5070 00 1 6300 02 7 6910 00 9 5940 04 1 1990-01
9 6280 04 3 1950 00 1 2510 03-8 2350 00 7 7230 02 6 7720 00 9.5900 04 1 6470 00
9 7100 04 3 9640 00 5.8020 02-7 4850 00 1 2840 03 5 4430 00 9 6110 04 2 9470 00
9 7450 04 4 3290 00 4 2450 00-6 3970 00 1 6110 03 4 0560 00 9.6530 04 3.7980 00
9 7940 04 4 3040 00-4 0580 02-5 2040 00 1 7380 03 2 8030 00 9 7060 04 4.1550 00
9 8390 04 4 0130 00-6 4600 02-4 0970 00 1 7100 03 1 8110 00 9.7590 04 4.1210 00
9 8760 04 3 5910 00-7 5370 02-3 1700 00 1 5880 03 1 0940 00 9 8060 04 3 8500 00
```

APPENDIX B

SHORT JOURNAL BEARING

The short bearing analysis of Dubois and Ocvirk [10] makes available explicit analytical expressions for the dynamic perturbation coefficients of circular and journal bearings valid for $L/D \lesssim 0.25$. Although these results are not precise enough for direct use at larger values of L/D, they still yield valid qualitative trends between the dynamic perturbation coefficients and static operating condition. The essential elements of this important work are summarized here.

Under the assumptions of an isoviscous lubricant and negligible misalignment, the governing equation for the film pressure of a short circular arc bearing is reduced to

$$\frac{\partial p}{\partial z^2} = \frac{6\mu}{h^3}\left(\omega\frac{\partial}{\partial\theta} + 2\frac{\partial}{\partial t}\right)h \tag{B-1}$$

The film thickness as illustrated in Fig. B-1, is given by the equation

$$h = C\{1-\varepsilon\cos(\theta-\psi)\} \tag{B-2}$$

Separating static equilibrium and dynamic perturbation parts, one can write

$$\varepsilon = \varepsilon_o + \delta\varepsilon; \quad \psi = \psi_o + \delta\psi; \quad h = h_o + \delta h$$

$$h_o = C\{1 - \varepsilon_o\cos(\theta-\psi_o)\} \tag{B-3}$$

$$\delta h = -\delta\varepsilon\cos(\theta-\psi_o) - \varepsilon_o\delta\psi\sin(\theta-\psi_o)$$

Integration of Eq. (B-1) with respect to z twice, one finds

$$p = \frac{3\mu}{h^3}\left(z^2 - \frac{L^2}{4}\right)\left(\omega\frac{\partial}{\partial\theta} + 2\frac{\partial}{\partial t}\right)h \tag{B-4}$$

Integrating over the full bearing length, one obtains

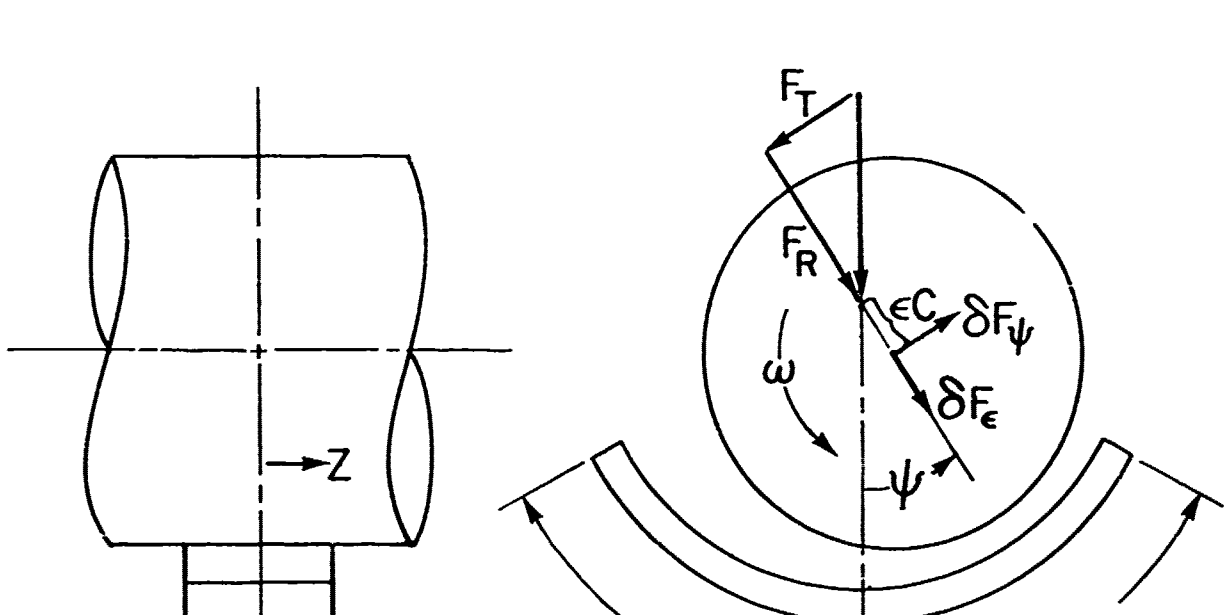

Figure B-1 Description of a Short Circular Arc Bearing

$$q = \int_{-\frac{L}{2}}^{\frac{L}{2}} p\,dz = -\frac{\mu L^3}{2h^3}\left(\omega\frac{\partial}{\partial\theta} + 2\frac{\partial}{\partial t}\right)h \tag{B-5}$$

Substituting Eq. (B-3) into Eq. (B-5) and separate static equilibrium and dynamic perturbation parts, one obtains

$$q = q_o + \delta q \tag{B-6}$$

$$q_o = -\left(\frac{\mu\omega L^3}{2C^2}\right)\frac{\varepsilon_o \sin(\theta-\psi_o)}{\{1-\varepsilon_o\cos(\theta-\psi_o)\}^3} \tag{B-7}$$

$$\delta q = -\left(\frac{\mu\omega L^3}{2C^2}\right)\{(f_1+\varepsilon_o f_3)\delta\varepsilon - (f_2-\varepsilon_o f_4)\varepsilon_o\delta\psi\} + \left(\frac{\mu L^3}{C^2}\right)(f_2\delta\dot{\varepsilon} + f_1\varepsilon_o\delta\dot{\psi}) \tag{B-8}$$

$$f_1 = \frac{\sin(\theta-\psi_o)}{\{1-\varepsilon_o\cos(\theta-\psi_o)\}^3} \quad ; \quad f_2 = \frac{\cos(\theta-\psi_o)}{\{1-\varepsilon_o\cos(\theta-\psi_o)\}^3}$$

$$f_3 = \frac{3\sin(\theta-\psi_o)\cos(\theta-\psi_o)}{\{1-\varepsilon_o\cos(\theta-\psi_o)\}^4} \quad ; \quad f_4 = \frac{3\sin^2(\theta-\psi_o)}{\{1-\varepsilon_o\cos(\theta-\psi_o)\}^4} \tag{B-9}$$

Global effects are obtained by integrating over projected areas through appropriate limits θ_1 and θ_2. That is

$$(F_R, F_T) = \int_{\theta_1}^{\theta_2} q_o\{\cos(\theta-\psi_o), -\sin(\theta-\psi_o)\}\,R\,d\theta \tag{B-10}$$

$$\frac{\partial(F_\varepsilon, F_\psi)}{\partial e}$$

$$= \left(\frac{\mu \omega L^3 R}{2C^3}\right) \int_{\theta_1}^{\theta_2} (f_1 + \varepsilon_o f_3) \{\cos(\theta-\psi_o), \sin(\theta-\psi_o)\} d\theta \quad \text{(B-11)}$$

$$\frac{\partial(F_\varepsilon, F_\psi)}{e_o \partial \psi}$$

$$= -\left(\frac{\mu \omega L^3 R}{2C^3}\right) \int_{\theta_1}^{\theta_2} (f_2 - \varepsilon_o f_4) \{\cos(\theta-\psi_o), \sin(\theta-\psi_o)\} d\theta \quad \text{(B-12)}$$

$$\frac{\partial(F_\varepsilon, F_\psi)}{\partial \dot{e}}$$

$$= -\left(\frac{\mu L^3 R}{C^3}\right) \int_{\theta_1}^{\theta_2} f_2 \{\cos(\theta-\psi_o), \sin(\theta-\psi_o)\} d\theta \quad \text{(B-13)}$$

$$\frac{\partial(F_\varepsilon, F_\psi)}{e_o \partial \dot{\psi}}$$

$$= -\left(\frac{\mu L^3 R}{C^3}\right) \int_{\theta_1}^{\theta_2} f_1 \{\cos(\theta-\psi_o), \sin(\theta-\psi_o)\} d\theta \quad \text{(B-14)}$$

Closed form integrals are available:

$$\int \frac{\sin(\theta-\psi_o) \cos(\theta-\psi_o) \, d\theta}{\{1 - \varepsilon_o \cos(\theta-\psi_o)\}^3}$$

$$= \frac{1-2\varepsilon_o \cos(\theta-\psi_o)}{2\varepsilon_o^2 \{1-\varepsilon_o \cos(\theta-\psi_o)\}^2} \quad \text{(B-15)}$$

$$\int \frac{\sin^2(\theta-\psi_o)\, d\theta}{\{1-\varepsilon_o \cos(\theta-\psi_o)\}^3}$$

$$= \frac{\chi - \sin\chi \cos\chi}{2(1-\varepsilon_o^2)^{3/2}} \qquad \text{(B-16)}$$

where

$$\chi = 2 \tan^{-1}\left[\sqrt{\frac{1+\varepsilon_o}{1-\varepsilon_o}} \tan\left(\frac{\theta-\psi_o}{2}\right)\right] \qquad \text{(B-17)}$$

$$\int f_1 \cos(\theta-\psi_o)\, d\theta = \int f_2 \sin(\theta-\psi_o)\, d\theta = -\frac{1}{2}\left[\frac{\cos(\theta-\psi_o)}{1-\varepsilon_o \cos(\theta-\psi_o)}\right]^2 \qquad \text{(B-18)}$$

$$\int f_2 \cos(\theta-\psi_o)\, d\theta = (1-\varepsilon_o^2)^{-5/2}\{(\tfrac{1}{2}+\varepsilon_o^2)\chi + \sin\chi(2\varepsilon_o + \tfrac{1}{2}\cos\chi)\} \qquad \text{(B-19)}$$

$$\int f_1 \sin(\theta-\psi_o)\, d\theta = \frac{1}{2}(1-\varepsilon_o^2)^{-3/2}\{\chi - \sin\chi\cos\chi\} \qquad \text{(B-20)}$$

$$\int f_3 \cos(\theta-\psi_o)\, d\theta = -\left[\frac{\cos(\theta-\psi_o)}{1-\varepsilon_o \cos(\theta-\psi_o)}\right]^3 \qquad \text{(B-21)}$$

$$\int f_4 \cos(\theta-\psi_o)\, d\theta = \int f_3 \sin(\theta-\psi_o)\, d\theta$$

$$= (1-\varepsilon_o^2)^{-5/2} \left\{\frac{3}{2}\varepsilon_o (\chi-\sin\chi\cos\chi) + \sin^3\chi\right\} \qquad \text{(B-22)}$$

$$\int f_4 \sin(\theta-\psi_o)\, d\theta = \frac{\cos^3(\theta-\psi_o) - \frac{1}{\varepsilon_o}}{\{1-\varepsilon_o \cos(\theta-\psi_o)\}^3} \qquad \text{(B-23)}$$

Consider now the full cylindrical journal bearing. Accepting the Gümbel cavitation condition and the assumption of film initiation at the maximum gap, then for the static equilibrium problem,

$$\theta_1 = -\pi + \psi_o; \qquad \theta_2 = \psi_o \qquad \text{(B-24)}$$

Consequently,

$$F_R = \left(\frac{\mu\omega L^3 R}{C^2}\right) \frac{\varepsilon_o^2}{(1-\varepsilon_o^2)^2} \quad ; \quad F_T = \left(\frac{\mu\omega L^3 R}{C^2}\right) \frac{\pi\varepsilon_o}{4(1-\varepsilon_o^2)^{3/2}}$$

or

$$\overline{W} = \left(\pi\frac{L}{D}\right)^2 \frac{\varepsilon_o\sqrt{1-\varepsilon_o^2 + \left(4\frac{\varepsilon_o}{\pi}\right)^2}}{(1-\varepsilon_o^2)^2} \qquad \psi_o = \tan^{-1}\left(\frac{\pi\sqrt{1-\varepsilon_o^2}}{4\varepsilon_o}\right)$$

(B-25)

represent the dimensionless static equilibrium operating parameters previously defined in Section 2.

Note that

$$\lim_{\varepsilon_o \to 0} \quad \overline{W} = (\pi \frac{L}{D})^2 \varepsilon_o$$

$$\lim_{\varepsilon_o \to 1} \quad \overline{W} = (\frac{L}{D})^2 \frac{4\pi}{(1-\varepsilon_o^2)^2}$$

Thus

$$\lim_{\overline{W} \to 0} \quad \varepsilon_o = (\pi \frac{L}{D})^{-2} \overline{W}$$

$$\lim_{\overline{W} \to \infty} \quad 1-\varepsilon_o = 2(\frac{L}{D}) \sqrt{\frac{\pi}{\overline{W}}}$$

respectively depict near-field and far-field asymptotic behaviors.

For the perturbation problems, θ_1 would remain unchanged but θ_2 would be shifted so the sum $q_o + \delta q$ vanishes. Therefore,

$$\theta_2 = \theta_{20} + \delta\theta_2$$

$$(\frac{\partial q_o}{\partial \theta})_{\theta_{20}} \delta\theta_2 + (\delta q)_{\theta_{20}} = 0$$

$$\delta\theta_2 = - (\frac{\delta q}{\partial q_o / \partial \theta})_{\theta_{20}} \qquad \text{(B-26)}$$

From Eqs. (B-8 and B-9), since at $\theta = \theta_{20} = \psi_o$

$$(f_1, f_3, f_4)_{\theta_{20}} = 0$$

$$f_2 = (1-\varepsilon_o)^{-3} \qquad \text{(B-27)}$$

$\delta\theta_2$ is zero for perturbations with respect to $\delta\varepsilon$ and $\delta\psi$ and needs to be evaluated only for perturbations with respect to $\delta\psi$ and $\delta\varepsilon$. Differentiating Eq. (B-7) with respect to θ, one finds

$$\frac{\partial q_o}{\partial \theta} = - \left(\frac{\mu\omega L^3}{2C^2}\right) \frac{\varepsilon_o}{\{1-\varepsilon_o \cos(\theta-\psi_o)\}^3} \left[\cos(\theta-\psi_o) - \frac{3\varepsilon_o \sin(\theta-\psi_o)}{\{1-\varepsilon_o \cos(\theta-\psi_o)\}}\right]$$

Therefore,

$$\delta\theta_2 = \delta\psi + \frac{2}{\varepsilon_o}\delta\varepsilon \tag{B-28}$$

Accordingly, allowing for the perturbed shift of $_2$, from Eq. (B-10, one finds

$$(F_R, F_T) = - \left(\frac{\mu\omega L^3 R}{2C^2}\right) \left(\frac{\delta\theta_2^2}{2}\right), - \left(\frac{\delta\theta_2^3}{3}\right) \frac{\varepsilon_o}{(1-\varepsilon_o)^3} \tag{B-29}$$

Clearly, in comparison with terms given by Eqs. (B-11) through (B-14), these are higher order effects and can be omitted from a dynamic perturbation analysis.

Upon substituting Eq. (B-24) for the limits of integration of Eqs. (B-18) through (B-23), Eqs. B-11) through (B-14) become

$$\frac{C^2}{\mu\omega L^3 R}\begin{bmatrix}\delta F_\varepsilon \\ \delta F_\psi\end{bmatrix} = -\begin{bmatrix}\bar{Z}_{\varepsilon\psi}\end{bmatrix}\begin{matrix}\delta\varepsilon \\ \varepsilon_o\delta\psi\end{matrix}$$

$$= -\begin{Bmatrix} \dfrac{2\varepsilon_o(1+\varepsilon_o^2)}{(1-\varepsilon_o^2)^3} + \dfrac{\pi(1+2\varepsilon_o^2)}{2(1-\varepsilon_o^2)^{5/2}}\dfrac{d}{\omega dt} & \dfrac{\pi}{4(1-\varepsilon_o^2)^{3/2}} - \dfrac{2\varepsilon_o}{(1-\varepsilon_o^2)^2}\dfrac{d}{\omega dt} \\ \dfrac{-\pi(1+2\varepsilon_o^2)}{4(1-\varepsilon_o^2)^{5/2}} - \dfrac{2\varepsilon_o}{(1-\varepsilon_o^2)^2}\dfrac{d}{\omega dt} & \dfrac{\varepsilon_o}{(1-\varepsilon_o^2)^2} + \dfrac{\pi}{2(1-\varepsilon_o^2)^{3/2}}\dfrac{d}{\omega dt} \end{Bmatrix} \begin{Bmatrix}\delta\varepsilon \\ \varepsilon_o\delta\psi\end{Bmatrix}$$

(B-30)

Using the nomenclature and coordinate system defined in Section 2, one obtains

$$\{4\pi\,(\tfrac{L}{D})^2\}^{-1}\left[\bar{K}\right]_{\text{short bearing}}$$

$$= \begin{Bmatrix}\cos\psi_o & \sin\psi_o \\ \sin\psi_o & \cos\psi_o\end{Bmatrix}\begin{bmatrix} \dfrac{2\varepsilon_o(1+\varepsilon_o)^2}{(1-\varepsilon_o^2)^3} & \dfrac{\pi}{4(1-\varepsilon_o^2)^{3/2}} \\ \dfrac{\pi(1+2\varepsilon_o^2)}{4(1-\varepsilon_o^2)^{5/2}} & \dfrac{\varepsilon_o}{(1-\varepsilon_o^2)^2}\end{bmatrix}\begin{Bmatrix}\cos\psi_o & \sin\psi_c \\ -\sin\psi_o & \cos\psi_o\end{Bmatrix}$$

(B-31)

$$\{4\pi \left(\frac{L}{D}\right)^{2-1}\} \omega \left[\bar{B}\right]$$

$$= \begin{Bmatrix} \cos\psi_o & -\sin\psi_o \\ \sin\psi_o & \cos\psi_o \end{Bmatrix} \begin{Bmatrix} \frac{\pi(1+2\varepsilon_o^2)}{2\,(1-\varepsilon_o^2)^{5/2}} & \frac{-2\varepsilon_o}{(1-\varepsilon_o^2)^2} \\ \frac{-2\varepsilon_o}{(1-\varepsilon_o^2)^2} & \frac{\pi}{2\,(1-\varepsilon_o^2)^{3/2}} \end{Bmatrix} \begin{Bmatrix} \cos\psi_o & \sin\psi_o \\ -\sin\psi_o & \cos\psi_o \end{Bmatrix}$$

(B-32)

Numerical results for Eqs. (B-25), (B-) and (B-32) are given in Table B-1. These results can be used to illustrate the natural motion analysis discussed in Section 2.4. At each static equilibrium condition as may be fixed by ε_o of $\bar{W}$, the set of eight (dimensionless) dynamic perturbation coefficients can be used to calculate the stiffness and damping constants ($\bar{k}_o$, $(\nu/\omega)\ \bar{b}_o$) as functions of the frequency ratio (ν/ω). At each (ν/ω) there are two sets of ($\bar{k}_o$, $(\nu/\omega)\ \bar{b}_o$) corresponding to the alternate signs in Eq. (20). One can define

$$\bar{m}_o = \bar{k}_o(\nu/\omega)^{-2}$$

which may be called the consistent (dimensionless) mass of the natural motion. Accordingly, one can further define the consistent dimensionless gravitational acceleration as

$$\bar{g}_o = \bar{W}/\bar{m}_o = (\nu/\omega)^2\ \bar{W}/\bar{k}_o$$

TABLE B-1

STATIC AND DYNAMIC CHARACTERISTICS OF SHORT JOURNAL BEARING

ecc	load	att angle	K-xx	B-xx	K-xy	B-xy	K-yx	B-yx	K-yy	B-yy
0.0000	0.0000E+00	90.0000	0.0000E+00	1.5707E+00	7.8539E-01	0.0000E+00	-7.8539E-01	0.0000E+00	0.0000E+00	1.5707E+00
0.0250	1.9663E-02	88.1762	2.5103E-02	1.5754E+00	7.8840E-01	5.0054E-02	-7.8533E-01	5.0054E-02	5.0052E-02	1.5720E+00
0.0500	3.9497E-02	86.3528	5.0832E-02	1.5895E+00	7.9747E-01	1.0044E-01	-7.8515E-01	1.0044E-01	1.0042E-01	1.5757E+00
0.0750	5.9677E-02	84.5298	7.7831E-02	1.6131E+00	8.1275E-01	1.5149E-01	-7.8483E-01	1.5149E-01	1.5143E-01	1.5819E+00
0.1000	8.0382E-02	82.7077	1.0678E-01	1.6468E+00	8.3446E-01	2.0356E-01	-7.8435E-01	2.0356E-01	2.0343E-01	1.5908E+00
0.1250	1.0180E-01	80.8866	1.3843E-01	1.6909E+00	8.6296E-01	2.5703E-01	-7.8367E-01	2.5703E-01	2.5675E-01	1.6023E+00
0.1500	1.2415E-01	79.0667	1.7360E-01	1.7463E+00	8.9869E-01	3.1228E-01	-7.8276E-01	3.1228E-01	3.1180E-01	1.6166E+00
0.1750	1.4765E-01	77.2482	2.1324E-01	1.8137E+00	9.4226E-01	3.6975E-01	-7.8155E-01	3.6975E-01	3.6898E-01	1.6338E+00
0.2000	1.7254E-01	75.4312	2.5844E-01	1.8945E+00	9.9440E-01	4.2992E-01	-7.7995E-01	4.2992E-01	4.2876E-01	1.6541E+00
0.2250	1.9918E-01	73.6157	3.1049E-01	1.9899E+00	1.0560E+00	4.9333E-01	-7.7789E-01	4.9333E-01	4.9166E-01	1.6779E+00
0.2500	2.2769E-01	71.8017	3.7092E-01	2.1017E+00	1.1282E+00	5.6059E-01	-7.7521E-01	5.6059E-01	5.5825E-01	1.7052E+00
0.2750	2.5863E-01	69.9892	4.4159E-01	2.2321E+00	1.2125E+00	6.3241E-01	-7.7177E-01	6.3241E-01	6.2923E-01	1.7365E+00
0.3000	2.9237E-01	68.1780	5.2477E-01	2.3837E+00	1.3105E+00	7.0958E-01	-7.6736E-01	7.0958E-01	7.0537E-01	1.7721E+00
0.3250	3.2940E-01	66.3679	6.2324E-01	2.5596E+00	1.4243E+00	7.9308E-01	-7.6172E-01	7.9308E-01	7.8757E-01	1.8125E+00
0.3500	3.7038E-01	64.5584	7.4050E-01	2.7639E+00	1.5565E+00	8.8401E-01	-7.5452E-01	8.8401E-01	8.7694E-01	1.8582E+00
0.3750	4.1585E-01	62.7492	8.8091E-01	3.0014E+00	1.7103E+00	9.8371E-01	-7.4534E-01	9.8371E-01	9.7474E-01	1.9099E+00
0.4000	4.6683E-01	60.9396	1.0500E+00	3.2781E+00	1.8896E+00	1.0938E+00	-7.3362E-01	1.0938E+00	1.0825E+00	1.9683E+00
0.4250	5.2438E-01	59.1289	1.2550E+00	3.6017E+00	2.0994E+00	1.2162E+00	-7.1867E-01	1.2162E+00	1.2022E+00	2.0345E+00
0.4500	5.8961E-01	57.3161	1.5052E+00	3.9818E+00	2.3460E+00	1.3534E+00	-6.9956E-01	1.3534E+00	1.3360E+00	2.1094E+00
0.4750	6.6429E-01	55.5003	1.8126E+00	4.4305E+00	2.6374E+00	1.5082E+00	-6.7507E-01	1.5082E+00	1.4868E+00	2.1945E+00
0.5000	7.5038E-01	53.6802	2.1935E+00	4.9635E+00	2.9839E+00	1.6845E+00	-6.4360E-01	1.6845E+00	1.6582E+00	2.2916E+00
0.5250	8.5048E-01	51.8541	2.6696E+00	5.6015E+00	3.3930E+00	1.8869E+00	-6.0298E-01	1.8869E+00	1.8548E+00	2.4025E+00
0.5500	9.6772E-01	50.0203	3.2704E+00	6.3712E+00	3.9004E+00	2.1215E+00	-5.5027E-01	2.1215E+00	2.0822E+00	2.5301E+00
0.5750	1.1065E+00	48.1766	4.0373E+00	7.3089E+00	4.5118E+00	2.3960E+00	-4.8142E-01	2.3960E+00	2.3479E+00	2.6776E+00
0.6000	1.2725E+00	46.3207	5.0284E+00	8.4638E+00	5.2657E+00	2.7208E+00	-3.9078E-01	2.7208E+00	2.6619E+00	2.8492E+00
0.6250	1.4735E+00	44.4493	6.3273E+00	9.9038E+00	6.2069E+00	3.1098E+00	-2.7030E-01	3.1098E+00	3.0375E+00	3.0506E+00
0.6500	1.7198E+00	42.5591	8.0576E+00	1.1725E+01	7.3988E+00	3.5819E+00	-1.0830E-01	3.5819E+00	3.4928E+00	3.2890E+00
0.6750	2.0263E+00	40.6457	1.0405E+01	1.4067E+01	8.9333E+00	4.1635E+00	1.1253E-01	4.1635E+00	4.0530E+00	3.5743E+00
0.7000	2.4140E+00	38.7040	1.3662E+01	1.7136E+01	1.0947E+01	4.8926E+00	4.1861E-01	4.8926E+00	4.7545E+00	3.9203E+00
0.7250	2.9143E+00	36.7276	1.8294E+01	2.1250E+01	1.3649E+01	5.8249E+00	8.5136E-01	5.8249E+00	5.6505E+00	4.3461E+00
0.7500	3.5748E+00	34.7085	2.5084E+01	2.6913E+01	1.7374E+01	7.0452E+00	1.4781E+00	7.0452E+00	6.8221E+00	4.8792E+00
0.7750	4.4717E+00	32.6371	3.5408E+01	3.4962E+01	2.2677E+01	8.6879E+00	2.4136E+00	8.6879E+00	8.3976E+00	5.5641E+00
0.8000	5.7313E+00	30.5001	5.1824E+01	4.6864E+01	3.0527E+01	1.0975E+01	3.8623E+00	1.0975E+01	1.0589E+01	6.4653E+00
0.8250	7.5771E+00	28.2804	7.9439E+01	6.5352E+01	4.2738E+01	1.4301E+01	6.2150E+00	1.4301E+01	1.3773E+01	7.6943E+00
0.8500	1.0434E+01	25.9543	1.2941E+02	9.5974E+01	6.2990E+01	1.9408E+01	1.0279E+01	1.9408E+01	1.8656E+01	9.4471E+00
0.8750	1.5196E+01	23.4872	2.2920E+02	1.5125E+02	9.9590E+01	2.7852E+01	1.7920E+01	2.7852E+01	2.6724E+01	1.2103E+01
0.9000	2.4006E+01	20.8260	4.5841E+02	2.6401E+02	1.7437E+02	4.3351E+01	3.4119E+01	4.3351E+01	4.1516E+01	1.6430E+01
0.9250	4.3132E+01	17.8808	1.1117E+03	5.4159E+02	3.5867E+02	7.6740E+01	7.5479E+01	7.6740E+01	7.3353E+01	2.4758E+01
0.9500	9.8043E+01	14.4747	3.8359E+03	1.4915E+03	9.9024E+02	1.7186E+02	2.2226E+02	1.7186E+02	1.6397E+02	4.4366E+01
0.9750	3.9615E+02	10.1481	3.1348E+04	8.4334E+03	5.6112E+03	6.8404E+02	1.3332E+03	6.8404E+02	6.5139E+02	1.2243E+02

Gecmetrical characterization of the natural orbit can be described in terms of the ratio of the minor radius to the major radius and the orientation angle of the major axis measured from the static equilibrium load vector. Tables B-2 (a) and B-2 (b) list results of natural orbit analysis performed for the short journal bearing at two static equilibrium conditions. Mode 1 and Mode 2, respectively, correspond to the lower and upper signs of Eq. (20). Symbols used in the headings of these tables are defined as follows:

ecc	static equilibrium eccentricity, ratio, ε_o
freq.	ν/ω
G	dimensionless consistent gravitational acceleration, $g_o/(C\omega^2)$
K	dimensionless stiffness constant, $k_o C^3/(\mu\omega L^3 R)$
N*C	dimensionless damping constant, $\nu b_o C^3/(\mu\omega L^3 R)$
b/a	minor/major radius ratio
orient	orientation angle in degrees of major axis measured from load vector

Table B-2 (a) is for $\varepsilon_o = 0.5$. Negative damping is indicated in the range

$$0 < \frac{\nu}{\omega} < 0.5$$

for Mode 1 which has a positive value of minor/major radius ratio at all frequencies, indicating a forward whirling mode. A lower bound of consistent gravitational acceleration for stable operation is

$$\left(\frac{g_o}{C\omega^2}\right)_{\text{lower bound}} \simeq 0.15$$

The corresponding consistent mass is often called the critical mass for instability. Mode 2 has a positive damping at all frequencies and has a negative minor/major radius ratio, indicating a backward whirl orbit. Table B-2 (b) is for $\varepsilon_o = 0.8$. The damping constant is positive at all frequencies. Thus, by static loading, it is possible to suppress instability.

TABLE B-2

NATURAL ORBIT PARAMETERS OF SHORT JOURNAL BEARING

(a)

		<<<<<<<<<<<<<<<<<<<< mode 1 >>>>>>>>>>>>>>>>>>>>					<<<<<<<<<<<<<<<<<<<< mode 2 >>>>>>>>>>>>>>>>>>>>				
ecc	freq	G	K	N*C	b/a	orient	G	K	N*C	b/a	orient
0.5000	0.0000	0.0000E+00	1.9259E+00	-1.3597E+00	0.4511	-6.4410	0.0000E+00	1.9259E+00	1.3597E+00	-0.4511	-6.4410
	0.1000	4.2683E-03	1.7580E+00	-1.0240E+00	0.4805	-12.9095	3.5837E-03	2.0938E+00	1.7495E+00	-0.4204	-0.6731
	0.2000	1.8675E-02	1.6071E+00	-7.3577E-01	0.5034	-19.6800	1.3371E-02	2.2446E+00	2.1868E+00	-0.3914	4.1591
	0.3000	4.5607E-02	1.4807E+00	-4.8114E-01	0.5155	-26.3147	2.8482E-02	2.3710E+00	2.6577E+00	-0.3646	8.0507
	0.4000	8.7135E-02	1.3778E+00	-2.4863E-01	0.5157	-32.4167	4.8529E-02	2.4739E+00	3.1507E+00	-0.3397	11.1348
	0.5000	1.4489E-01	1.2947E+00	-3.0917E-02	0.5058	-37.7218	7.3361E-02	2.5571E+00	3.6585E+00	-0.3168	13.5747
	0.6000	2.2009E-01	1.2273E+00	1.7630E-01	0.4890	-42.1473	1.0292E-01	2.6244E+00	4.1768E+00	-0.2958	15.5145
	0.7000	3.1359E-01	1.1725E+00	3.7561E-01	0.4683	-45.7500	1.3723E-01	2.6793E+00	4.7030E+00	-0.2765	17.0685
	0.8000	4.2593E-01	1.1275E+00	5.6865E-01	0.4459	-48.6525	1.7627E-01	2.7243E+00	5.2355E+00	-0.2589	18.3243
	0.9000	5.5746E-01	1.0903E+00	7.5655E-01	0.4232	-50.9881	2.2009E-01	2.7615E+00	5.7731E+00	-0.2429	19.3481
	1.0000	7.0832E-01	1.0593E+00	9.4013E-01	0.4011	-52.8755	2.6871E-01	2.7924E+00	6.3150E+00	-0.2284	20.1898
	1.2000	1.0681E+00	1.0115E+00	1.2967E+00	0.3604	-55.6721	3.8043E-01	2.8402E+00	7.4095E+00	-0.2032	21.4709
	1.4000	1.5050E+00	9.7717E-01	1.6421E+00	0.3250	-57.5863	5.1162E-01	2.8746E+00	8.5151E+00	-0.1822	22.3781
	1.6000	2.0182E+00	9.5181E-01	1.9790E+00	0.2947	-58.9413	6.6239E-01	2.9000E+00	9.6293E+00	-0.1648	23.0385
	1.8000	2.6066E+00	9.3270E-01	2.3091E+00	0.2689	-59.9296	8.3285E-01	2.9191E+00	1.0750E+01	-0.1500	23.5311
	2.0000	3.2695E+00	9.1803E-01	2.6340E+00	0.2468	-60.6698	1.0230E+00	2.9338E+00	1.1876E+01	-0.1375	23.9065
	2.2000	4.0061E+00	9.0656E-01	2.9546E+00	0.2277	-61.2369	1.2331E+00	2.9452E+00	1.3006E+01	-0.1268	24.1983
	2.4000	4.8160E+00	8.9745E-01	3.2717E+00	0.2112	-61.6802	1.4629E+00	2.9544E+00	1.4140E+01	-0.1176	24.4289
	2.6000	5.6988E+00	8.9011E-01	3.5861E+00	0.1968	-62.0326	1.7127E+00	2.9617E+00	1.5277E+01	-0.1095	24.6139
	2.8000	6.6540E+00	8.8412E-01	3.8982E+00	0.1841	-62.3172	1.9823E+00	2.9677E+00	1.6416E+01	-0.1024	24.7644
	3.0000	7.6815E+00	8.7917E-01	4.2083E+00	0.1729	-62.5501	2.2718E+00	2.9726E+00	1.7557E+01	-0.0962	24.8883
	3.2000	8.7810E+00	8.7505E-01	4.5168E+00	0.1629	-62.7429	2.5812E+00	2.9767E+00	1.8699E+01	-0.0906	24.9914
	3.4000	9.9525E+00	8.7158E-01	4.8239E+00	0.1540	-62.9043	2.9106E+00	2.9802E+00	1.9843E+01	-0.0856	25.0781
	3.6000	1.1195E+01	8.6863E-01	5.1298E+00	0.1459	-63.0407	3.2598E+00	2.9832E+00	2.0988E+01	-0.0812	25.1516
	3.8000	1.2510E+01	8.6610E-01	5.4346E+00	0.1387	-63.1569	3.6290E+00	2.9857E+00	2.2134E+01	-0.0771	25.2144
	4.0000	1.3897E+01	8.6392E-01	5.7388E+00	0.1321	-63.2567	4.0182E+00	2.9879E+00	2.3281E+01	-0.0734	25.2686

(b)

		<<<<<<<<<<<<<<<<<<<< mode 1 >>>>>>>>>>>>>>>>>>>>					<<<<<<<<<<<<<<<<<<<< mode 2 >>>>>>>>>>>>>>>>>>>>				
ecc	freq	G	K	N*C	b/a	orient	G	K	N*C	b/a	orient
0.8000	0.0000	0.0000E+00	7.9051E+00	0.0000E+00	0.0000	-55.1978	0.0000E+00	5.4509E+01	0.0000E+00	0.0000	5.0258
	0.1000	7.2785E-03	7.8742E+00	7.2772E-02	0.0321	-55.3687	1.0508E-03	5.4540E+01	5.2601E+00	-0.0154	5.1164
	0.2000	2.9444E-02	7.7860E+00	1.6508E-01	0.0625	-55.8624	4.1966E-03	5.4628E+01	1.0500E+01	-0.0299	5.3758
	0.3000	6.7406E-02	7.6523E+00	2.9161E-01	0.0898	-56.6279	9.4193E-03	5.4761E+01	1.5707E+01	-0.0426	5.7707
	0.4000	1.2246E-01	7.4882E+00	4.5992E-01	0.1132	-57.5963	1.6695E-02	5.4926E+01	2.0871E+01	-0.0532	6.2586
	0.5000	1.9606E-01	7.3080E+00	6.7111E-01	0.1324	-58.6955	2.6001E-02	5.5106E+01	2.5993E+01	-0.0616	6.7981
	0.6000	2.8965E-01	7.1231E+00	9.2196E-01	0.1474	-59.8608	3.7316E-02	5.5291E+01	3.1075E+01	-0.0680	7.3554
	0.7000	4.0456E-01	6.9417E+00	1.2071E+00	0.1586	-61.0397	5.0625E-02	5.5472E+01	3.6123E+01	-0.0725	7.9055
	0.8000	5.4190E-01	6.7688E+00	1.5207E+00	0.1666	-62.1931	6.5918E-02	5.5645E+01	4.1142E+01	-0.0755	8.4323
	0.9000	7.0259E-01	6.6074E+00	1.8570E+00	0.1717	-63.2946	8.3186E-02	5.5806E+01	4.6139E+01	-0.0773	8.9262
	1.0000	8.8735E-01	6.4588E+00	2.2110E+00	0.1746	-64.3279	1.0242E-01	5.5955E+01	5.1118E+01	-0.0782	9.3826
	1.2000	1.3310E+00	6.2003E+00	2.9566E+00	0.1754	-66.1620	1.4681E-01	5.6213E+01	6.1038E+01	-0.0778	10.1795
	1.4000	1.8756E+00	5.9892E+00	3.7330E+00	0.1718	-67.6862	1.9908E-01	5.6425E+01	7.0928E+01	-0.0757	10.8322
	1.6000	2.5217E+00	5.8181E+00	4.5251E+00	0.1658	-68.9331	2.5924E-01	5.6596E+01	8.0802E+01	-0.0727	11.3620
	1.8000	3.2695E+00	5.6795E+00	5.3236E+00	0.1586	-69.9479	3.2730E-01	5.6734E+01	9.0669E+01	-0.0693	11.7915
	2.0000	4.1181E+00	5.5668E+00	6.1236E+00	0.1511	-70.7714	4.0327E-01	5.6847E+01	1.0055E+02	-0.0659	12.1409
	2.2000	5.0669E+00	5.4745E+00	6.9221E+00	0.1435	-71.4505	4.8717E-01	5.6939E+01	1.1040E+02	-0.0625	12.4268
	2.4000	6.1150E+00	5.3985E+00	7.7176E+00	0.1363	-72.0068	5.7900E-01	5.7015E+01	1.2027E+02	-0.0593	12.6623
	2.6000	7.2615E+00	5.3354E+00	8.5095E+00	0.1294	-72.4679	6.7877E-01	5.7078E+01	1.3014E+02	-0.0563	12.8577
	2.8000	8.5058E+00	5.2827E+00	9.2974E+00	0.1230	-72.8530	7.8649E-01	5.7131E+01	1.4002E+02	-0.0534	13.0212
	3.0000	9.8472E+00	5.2382E+00	1.0081E+01	0.1170	-73.1769	9.0215E-01	5.7176E+01	1.4990E+02	-0.0508	13.1589
	3.2000	1.1285E+01	5.2004E+00	1.0861E+01	0.1114	-73.4513	1.0257E+00	5.7213E+01	1.5979E+02	-0.0484	13.2758
	3.4000	1.2819E+01	5.1681E+00	1.1638E+01	0.1063	-73.6855	1.1573E+00	5.7246E+01	1.6968E+02	-0.0461	13.3756
	3.6000	1.4449E+01	5.1403E+00	1.2412E+01	0.1016	-73.8866	1.2968E+00	5.7273E+01	1.7957E+02	-0.0441	13.4615
	3.8000	1.6175E+01	5.1163E+00	1.3183E+01	0.0972	-74.0604	1.4443E+00	5.7297E+01	1.8946E+02	-0.0421	13.5358
	4.0000	1.7996E+01	5.0954E+00	1.3951E+01	0.0931	-74.2115	1.5998E+00	5.7318E+01	1.9936E+02	-0.0404	13.6005

APPENDIX C

THE HALF SOMMERFELD SOLUTION

The classical solution for an infinitely long journal bearing is remembered by the name of the noted mathematician Sommerfeld [11]. The differential equation to be solved is

$$\frac{d}{d\theta}\left[\frac{h^3}{12\mu}\frac{dp}{Rd\theta} - \left(\frac{\omega R}{2}\right)h\right] = 0 \qquad \text{(C-1)}$$

where $h = C(1-\varepsilon\cos\theta) = CH$. Upon integrating once,

$$\frac{dp}{d\theta} = \frac{6\mu\omega R^2}{C^2}\left(\frac{1}{H^2} - \frac{H^*}{H^3}\right) \qquad \text{(C-2)}$$

H^* is the value of the dimensionless gap at the pressure peak. Integrating again

$$p = \frac{6\mu\omega R^2}{C^2}\left\{\left(\int\frac{d\theta}{H^2} + H^*\int\frac{d\theta}{H^3}\right) + A\right\}$$

$$= \frac{6\mu\omega R^2}{C^2}\left\{(1-\varepsilon^2)^{-3/2}(\chi + \varepsilon\sin\chi)\right.$$

$$\left. + H^*(1-\varepsilon^2)^{-5/2}\left[\left(1+\frac{\varepsilon^2}{2}\right)\chi + 2\varepsilon\sin\chi + \frac{\varepsilon^2}{4}\sin 2\chi\right] + A\right\}$$

where $\chi = 2\tan^{-1}\left[\sqrt{\frac{1+\varepsilon}{1-\varepsilon}}\left(\tan\frac{\theta}{2}\right)\right]$. A is a second integration constant. Requiring p to be periodic, one finds

$$H^* = \frac{2(1-\varepsilon^2)}{2+\varepsilon^2} \qquad \text{(C-3)}$$

A is set to zero since it only represents a pressure level. Thus

$$\frac{2\pi pC^2}{\mu\omega R^2}$$

$$= \frac{-12\pi \sin\chi\ (2-\varepsilon^2 + \varepsilon\cos\chi)}{(1-\varepsilon^2)^{3/2}\ (2+\varepsilon^2)}$$

$$= -\frac{12\pi\varepsilon\ (1+H)\sin\theta}{(2+\varepsilon^2)\ H^2} \qquad \text{(C-4)}$$

This is seen to be an odd function of θ, being positive in the converging gap but negative in the divergent gap. Gümbel [8] suggested that the lubricant film would not sustain the negative pressure so that Eq. (C-4) is valid only in the convergent half of the circumference. This is known as the half Sommerfeld solution.

Dimensionless force components based on half Sommerfeld solution are

$$\overline{W}_R = \frac{\pi C^2}{\mu\omega R^2}\int_{-\pi}^{0} p\cos\theta\, d\theta$$

$$= \frac{\pi C^2}{\mu\omega R^2}\ \{p\sin\theta\Big|_{-\pi}^{0} - \int_{-\pi}^{0}\sin\theta\,\frac{dp}{d\theta}\,d\theta\}$$

$$= -6\pi\int_{-\pi}^{0}\left(\frac{1}{H^2} - \frac{H^*}{H^3}\right)\sin\theta\, d\theta$$

$$= \frac{12\pi\varepsilon^2}{(1-\varepsilon^2)(2+\varepsilon^2)} \qquad \text{(C-5)}$$

$$\bar{W}_T = \frac{\pi C^2}{\mu\omega R^2} \int_{-\pi}^{0} - p \sin\theta \, d\theta$$

$$= - 6\pi \int_{-\pi}^{0} \left(\frac{1}{H^2} - \frac{H^*}{H^3}\right) \cos\theta \, d\theta$$

$$= \frac{6\pi^2 \varepsilon}{\sqrt{1-\varepsilon^2}\,(2+\varepsilon^2)} \qquad \text{(C-6)}$$

Or, the dimensionless load and the attitude angle are

$$\bar{W} = \frac{2\pi W C^2}{\mu\omega R^2 L D}$$

$$= \sqrt{\bar{W}_R^2 + \bar{W}_T^2}$$

$$= \frac{6\pi^2 \varepsilon}{(1-\varepsilon^2)(2+\varepsilon^2)} \sqrt{1 - \left(1 - \frac{4}{\pi^2}\right) \varepsilon^2} \qquad \text{(C-7)}$$

$$= \tan^{-1} \left(\frac{\pi\sqrt{1-\varepsilon^2}}{2\varepsilon}\right)$$

APPENDIX D

LISTING OF RETRIEVAL FILES

FILE NO. PJ-05-1

```
        FILE SIZE =   17
        L/D       =    0.5000
        ALFA      =    1.1250
 0 0000D-01 1.4547D-01 2.8917D-01 4 3331D-01 5 6090D-01 7 0641D-01 7 8259D-01
 8 7489D-01 9.0123D-01 9.3233D-01 9.4160D-01 9 5931D-01 9 6382D-01 9 7737D-01
 9 8190D-01 9 8551D-01 1 0000D 00
 1 0000D 00 0 0000D-01 4 6553D-01 9 9133D-01 1.0000D 00-1 5071D 00 0 0000D-01
 3 5886D 01 7 9917D-01-1 1275D 00 5 2201D 00-2.9527D 01 6 7645D-01-6 8218D-01
 9 7697D-01 6 0402D 00 5 9128D-01-4 7862D-01 1 8476D 00 8 7404D-01 5 4556D-01
-2 3577D-01 1.9591D 00 1.2226D 01 5 3827D-01 1 7875D-01 2 7382D 00 2 3834D 01
 5.6444D-01 5 3215D-01 5.5516D 00 6.7419D 01 6 4616D-01 1 3728D 00 1 1780D 01
 1 5560D 02 6 8584D-01 1.6972D 00 1 5880D 01 2 4609D 02 7 4752D-01 2 3100D 00
 2 3532D 01 4 1534D 02 7 7001D-01 2 5462D 00 2 7412D 01 7 8980D 02 8 2006D-01
 3 1429D 00 3.9982D 01 5.9739D 02 8 3465D-01 3.3293D 00 4 2676D 01 1 8071D 02
 8 8443D-01 4.0735D 00 6 7162D 01 5 1491D 03 9 0764D-01 4 4304D 00 4 0477D 01
 1.2694D 04 9.2034D-01 4 8402D 00 1 3635D 02-9 4118D 03 1 0000D 00
 0 0000D-01-5 0000D-01 9.0000D 01 1 8870D 02 1 0000D 00-1 5391D 00 0 0000D-01
 3 7156D 01 7.9517D-01-1.1460D 00 5 4050D 00-2 9665D 01 6 7162D-01-6 7559D-01
 1 1420D 00 1 4399D 00 5.8683D-01-4 9603D-01 1 3495D 00-2.5729D 00 5 3363D-01
-3 4479D-01 1.0213D 00 6.0473D 00 4 9738D-01-1 3215D-01 1 9012D 00 1 1734D 01
 4 9369D-01 4.8455D-02 2 7940D 00 7.6173D 01 5.1991D-01 6 2969D-01 3 8316D 00
 1.9367D 02 5 4051D-01 9 5595D-01 1 4934D 01 6 9373D 02 5 8093D-01 1 7558D 00
 3 6507D 01 7 4281D 02 5 9888D-01 2 1262D 00 4 3395D 01 3 2007D 03 6 4630D-01
 3 3967D 00 1 0009D 02 1 4550D 03 6 6266D-01 3 8628D 00 1 0464D 02 1 4749D 04
 7 3091D-01 6.6617D 00 3.0649D 02 3.5829D 04 7.6477D-01 8 4168D 00 4 6872D 02
 6 3320D 04 7 9874D-01 1.0524D 01 6 9754D 02-4 8149D 04 1 0000D 00
 0 0000D-01 5 0000D-01 1 9576D 01 6 7158D 00 1.0000D 00 1 0700D 00 0 0000D-01
-1 6629D 01 1 1471D 00 8.9403D-01-2 4189D 00 1 7137D 01 1 2591D 00 7.2337D-01
 4 3750D-02-2.9967D 00 1.3623D 00 6 9855D-01-3.8819D-01-8 9594D-01 1 4480D 00
 6 4173D-01-5 0250D-01-2.2397D 01 1 5245D 00 3 3147D-01-3 7617D 00-4 7612D 01
 1 5354D 00-9.2527D-02-7.3841D 00-1 3930D 02 1 4770D 00-1 3692D 00-2 0254D 01
-2 4728D 02 1 4331D 00-1.9887D 00-2 6769D 01-4 7387D 02 1 3560D 00-2 0502D 00
-4 1504D 01-8 5760D 02 1 3258D 00-3 4720D 00-4 9457D 01-4 2966D 02 1 2561D 00
-4 4152D 00-5 7066D 01-3.3754D 03 1.2356D 00-4 7069D 00-7 2289D 01-3 8134D 03
 1.1636D 00-6.0365D 00-1 2396D 02 9 6223D 03 1 1352D 00-6 4991D 00-8 0388D 01
-2 0158D 04 1 1110D 00-6 9212D 00-1 5323D 02 1 0577D 04 1 0000D 00
 0 0000D-01 0 0000D-01 1 5637D 00 2 9486D 00 1 0000D 00-4 6636D-01 0 0000D-01
 1 8983D 01 9.4191D-01-2 6546D-01 2 7614D 00-1 7433D 01 3 2365D-01-4 8657D-02
 2 5608D-01 7 7325D-01 9 1966D-01-3 7095D-03 3 6754D-01-2 3815D 00 3 2138D-01
 2 3800D-02 6 3687D-02 1.9457D 00 9 2651D-01 5 3668D-02 3 4682D-01-2 6398D 00
 9 3141D-01 7 2415D-02 1 4598D-01 1 5366D 01 9 4690D-01 1 5669D-01 1 6783D 00
-1 6011D 01 9 4556D-01 1 9535D-01 1 2565D 00 9 4594D 01 9 5272D-01 2 8016D-01
 4 1980D 00 1 8999D 02 9 5552D-01 3 2721D-01 5 9548D 01 3 1927D 02 3 6254D-01
 4 8224D-01 1 1542D 01-3 7326D 02 9 6483D-01 5 3051D-01 9 8594D 00-4 3241D 02
 9 7274D-01 6.2441D-01 4 0007D 00 1 4740D 04 9 7567D-01 7 8955D-01 6 8935D 01
 2 7962D 03 9 7916D-01 1 0569D 00 7 9039D 01-5 4559D 03 1 0003D 00
 1 0000D 00 0 0000D-01 1 3728D 00 2 9089D 00 1 0000D 00-1 5043D 00 0 0000D-01
 3 5446D 01 7 9937D-01-1 1292D 00 5 1562D 00-2 9372D 01 6 7582D-01-6 9112D-01
 9 4109D-01 6 1851D 00 5 8967D-01-4 9123D-01 1 8306D 00 8 7452D-01 5 4165D-01
-2 4947D-01 1 9569D 00 1 2038D 01 5 3225D-01 1 6174D-01 2 7546D 00 2 9592D 01
 5 5721D-01 5 1783D-01 5 6260D 00 6 5198D 01 6 3764E-01 1 3154E 00 1 1e50D 01
 2 2370D 02 6 7703D-01 1 7605D 00 1 7544D 01 1 6248D 02 2 3721D-01 2 3246D 00
 2 2596D 01 6 1221D 02 7 6181D-01 2 5605D 00 2 8283D 01 1 1706D 02 2 1268D-01
```

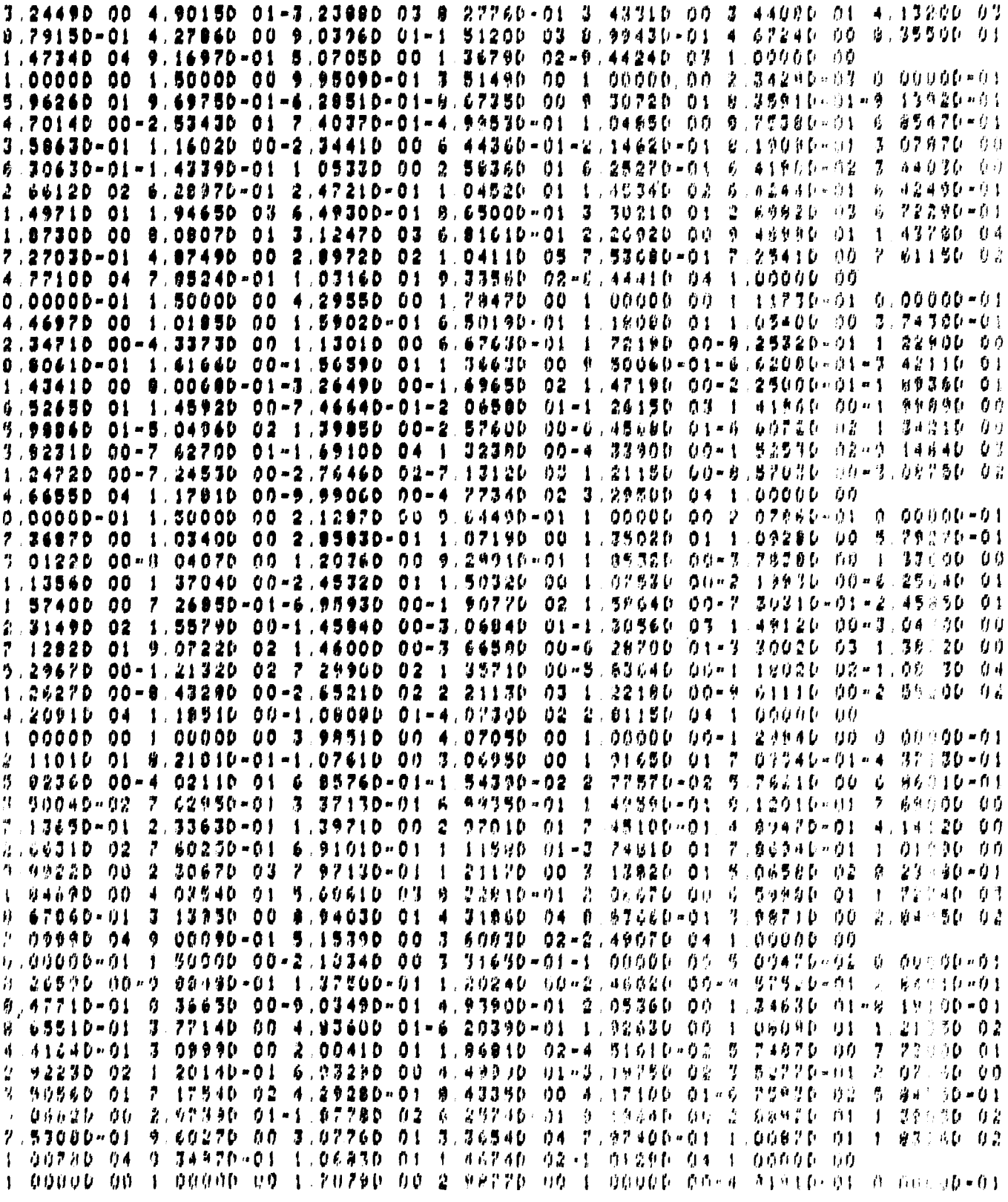

Best Available Copy

1	54930D 01	9.36390D-01	-3.27990D-01	2.25300D 00	-1.72520D 01	9.04000D-01	-1.82250D-01	
[illegible]	23450D-01	3 95990D 00	8 77310D-01	-1.74650D-01	3.30900D-01	-2.99400D 00	8.56690D-01	
-1	56800D-01	-5.11050D-02	2.63880D 00	8.34680D-01	-1 36300D-01	3.32880D-01	-1.18380D 00	
0	25190D-01	-1 14400D-01	2.42820D-01	3.32540D 01	8 20030D-01	4.99570D-02	3.31510D 00	
1	52730D 02	8.22960D-01	1.90320D-01	7.33920D 00	3.10210D 01	8.32500D-01	4.33530D-01	
0	30380D 00	1 92710D 03	8 37210D-01	5.93390D-01	2.61740D 01	6.95600D 02	8.52470D-01	
1	16600D 00	3 84930D 01	4.42810D 03	8.58190D-01	1.38460D 00	5.84630D 01	4.08290D 03	
[illegible]	84010D-01	2 55160D 00	1 13780D 02	3.29140D 04	8.97240D-01	-3.40420D 00	2.62820D 02	
2	04950D 04	9 11420D-01	4.40780D 00	3.36800D 02	-2.32540D 04	1 00000D 00		
1	00000D 00	1.00000D 00	2 12330D 00	2 13380D 00	1.00000D 00	2.98720D-02	0.00000D-01	
-1	99020D 00	1 00330D 00	8.92130D-03	-2 88040D-01	-2.25210D 00	1.00050D 00	-5.57270D-02	
[illegible]	11690D-01	2 09240D 00	9 97190D-01	-1 22160D-01	-3 10090D-01	-1.97310D-01	9.69000D-01	
[illegible]	[illegible]D-01	-3 35270D-01	-1.08780D-01	9.41670D-01	-2.13270D-01	-3 51100D-01	-1.67630D 00	
[illegible]	24270D-01	-2.44830D-01	-4.78630D-01	3 93860D 00	9.00120D-01	-2 72240D-01	-1.14750D-01	
	[illegible]D 02	9.93340D-01	-2.26340D-01	3 59930D 00	-8 60700D 00	8 88000D-01	-1.18580D-01	
3	23160D 00	8.30660D 02	8.87150D-01	-5.19680D-02	1.10340D 01	1.08010D 03	8.88960D-01	
[illegible]	[illegible]D-01	3 01620D 01	2.54270D 03	8 90720D-01	4.74720D-01	4 16290D 01	4.63630D 03	
[illegible]	[illegible]D-01	1.46440D 00	1 04450D 02	4.17470D 04	9.11240D-01	2.36530D 00	2.93480D 02	
2	28990D 04	[illegible] 21950D-01	3.57540D 00	3 76230D 02	-2.59700D 04	1 00000D 00		
[illegible]	[illegible]D-01	[illegible] 00000D-01	3 54140D 00	9 95100D 00	1.00000D 00	3.14700D-01	0.00000D-01	
[illegible]	[illegible]D 01	1 01090D 00	-4.03570D-01	-9.87540D 00	8.79280D 01	8.94470D-01	-9.14820D-01	
	[illegible]D 00	-1 [illegible]D 01	7 [illegible]D-01	-6.83410D-01	4.50590D-01	4 39450D 00	7.01280D-01	
[illegible]	90150D-01	1 01130D 00	6.06340D-01	6 26430D-01	-4.36580D-01	1.09950D 00	7.63100D 00	
[illegible]	[illegible]D-01	-3.30940D-01	1.68010D 00	4 97470D 01	5.80100D-01	3.67010D-02	6.27620D 00	
[illegible]	[illegible]D 02	5 84130D-01	3 03540D-01	1 39790D 01	4 28570D 02	6.02480D-01	9.45430D-01	
[illegible]	[illegible]D 01	1 [illegible]D 03	6 12640D-01	1.27200D 00	4 31390D 01	3 23850D 03	6 44940D-01	
[illegible]	[illegible]D 00	1.00490D 02	4.37[illegible]D 03	[illegible] 57500D-01	8 04170D 00	1 20240D 02	1 54070D 04	
[illegible]	16140D-01	6 08520D 00	3 29000D 02	7 17840D 04	7 48170D-01	8 31080D 00	6 54040D 02	
4	82190D 04	7 02860D-01	1 09890D 01	8 20290D 02	-5.71750D 04	1.00000D 00		

Best Available Copy

FILE NO. ML2-05-1

```
        FILE SIZE =    13
        L/D       =     0.5000
        ALFA      =     1.1250
 0.00000D-01 9.14430D-02 1.57810D-01 2.98380D-01 5.03970D-01 5.82060D-01 6.50140D-01
 7.28480D-01 8.16560D-01 9.12450D-01 9.56120D-01 9.87360D-01 1.00000D 00
 1.00000D 00 0.00000D-01 4.7046D-01 1.00000D 00 1.00000D 00-1.52440D 00 0.00000D-01
 6.1493D 01 8.68440D-01-1.2673D 00 5.62310D 00-5.6662D 01 7.93950D-01-1.31890D 00
 1.8624D 00 3.24690D-01 6.6927D-01-7.5392D-01 1.90200D 00-2.00070D-01 5.54310D-01
-3.6598D-01 1.8669D 00 6.9469D 00 5.31970D-01-1.9922D-01 2.40160D 00 7.10420D 00
 5.2435D-01-1.9265D-02 2.8854D 00-2.0712D 01 5.33350D-01 2.70320D-01 4.50790D 00
 1.9713D 01 5.76890D-01 7.4384D-01 6.2442D 00 1.38940D 02 6.97340D-01 1.39140D 00
 1.9567D 01-5.6427D 01 8.0174D-01 2.7821D 00 1.7103D 01 4.65760D 03 9.20710D-01
 5.5903D 00 1.6264D 02-1.2872D 04 1.00000D 00
 0.0000D-01-5.0000D-01 9.0358D 01 1.6593D 02 1.00000D 00-2.13540D 00 0.00000D-01
 1.1634D 02 8.19560D-01-1.6490D 00 1.0638D 01-1.0327D 02 7.20520D-01-1.17030D 00
 3.7840D 00-7.3988D 00 5.9797D-01-7.1152D-01 2.7440D 00-7.44570D 00 4.98890D-01
-3.0473D-01 1.2133D 00 1.9817D 00 4.7695D-01-2.0395D-01 1.3690D 00 7.3005D 00
 4.6862D-01-9.3902D-02 1.8650D 00-3.7407D 00 4.6669D-01 4.0720D-02 1.5726D 00
 7.0233D 01 4.8437D-01 4.5162D-01 7.7581D 00-9.8359D-01 5.6320D-01 1.1910D 00
 7.6638D 00 3.0659D 03 6.6507D-01 4.4491D 00 1.4155D 02 5.5445D 02 8.7002D-01
 9.1429D 00 1.5888D 02-1.2574D 04 1.00000D 00
 0.0000D-01 5.0000D-01 1.7559D 01 8.3561D 00 1.0000D 00 1.3424D 00 0.0000D-01
-4.2099D 01 1.1174D 00 1.1664D 00-3.8497D 00 4.0101D 01 1.1883D 00 9.9943D-01
-1.1822D 00-9.0908D-01 1.3167D 00 8.2429D-01-1.3099D 00-7.8563D-01 1.4573D 00
 5.3840D-01-1.4713D 00-1.0509D 01 1.4940D 00 3.9146D-01-2.2920D 00-1.6152D 01
 1.5145D 00 1.9800D-01-3.3916D 00-2.5805D 01 1.5176D 00-1.4687D-01-5.4131D 00
-4.5128D 01 1.4785D 00-7.9871D-01-9.3880D 00-1.0257D 02 1.7437D 00-2.1705D 00
-1.9223D 01-7.9880D 02 1.2195D 00-3.7716D 00-5.4107D 01-2.5619D 02 1.0739D 00
-5.5874D 00-6.2112D 01 4.9158D 03 1.00000D 00
 0.0000D-01 0.0000D-01 3.1431D 00 2.3833D 00 1.0000D 00 2.9141D-01 0.0000D-01
-1.1003D 01 1.0252D 00 2.4541D-01-1.0061D 00 5.7261D 00 1.0396D 00 1.9124D-01
-6.2606D-01 2.3896D 00 1.0614D 00 1.2684D-01-2.9016D-01 6.4776D-01 1.0822D 00
 8.0881D-02-1.5698D-01-5.3171D-01 1.0881D 00 6.7001D-02-1.9251D-01-1.4761D 00
 1.0921D 00 5.0067D-02-2.9899D-01 2.8346D-01 1.0951D 00 2.7533D-02-2.7632D-01
-1.2834D 01 1.0950D 00-4.6591D-02-1.4068D 00-1.6108D 01 1.0817D 00-2.5554D-01
-2.9513D 00-5.0864D 02 1.0607D 00-8.6941D-01-2.5163D 01 7.9345D 01 1.0216D 00
-1.6170D 00-2.2684D 01 1.7953D 03 1.00000D 00
 1.0000D 00 0.0000D-01 1.1490D 00 1.6024D 00 1.0000D 00-1.6762D 00 0.0000D-01
 7.6101D 01 8.5642D-01-1.3580D 00 6.9589D 00-7.7886D 01 7.7782D-01-1.0677D 00
 1.7895D 00 6.5096D 00 6.4842D-01-7.5186D-01 2.7045D 00-1.9642D 00 5.4816D-01
-2.3735D-01 2.3007D 00 4.8490D 00 5.3703D-01-4.2892D-02 2.6794D 00 2.5329D 00
 5.4045D-01 1.4538D-01 2.8519D 00 1.8022D 01 5.6203D-01 4.2409D-01 4.2637D 00
 1.9643D 01 6.1816D-01 8.7583D-01 5.9939D 00 8.6186D 01 7.4237D-01 1.9468D 00
 1.4258D 01 3.9335D 02 8.4207D-01 2.8445D 00 3.1436D 01 2.2411D 02 9.4775D-01
 3.9655D 00 4.0313D 01-3.1906D 03 1.00000D 00
 1.0000D 00 1.5000D 00 1.5247D 00 3.2117D 00 1.00000D 00 6.6084D-01 0.0000D-01
-1.5609D 02 1.0405D 00 8.2542D-03-1.4273D 01 1.9269D 02 1.0190D 00-5.1405D-01
-1.4838D 00 5.7482D 00 9.3470D-01-6.6643D-01-6.7574D-01 1.2948D 01 8.1085D-01
-4.0492D-01 3.2198D 00-6.3446D 01 7.8401D-01-7.4694D-01-1.2349D 00 5.2311D 01
 7.5912D-01-3.4383D-01 1.8262D 00-1.5782D 01 7.3652D-01-2.1920D-01 5.8992D-01
-2.0614D 01 7.1452D-01-2.7721D-01-1.2258D 00 1.8668D 02 7.1973D-01 4.6249D-01
 1.6675D 01 2.1106D 03 7.7516D-01 3.2042D 00 1.0885D 02-1.2686D 03 9.2147D-01
 5.9372D 00 6.6082D 01-5.2299D 03 1.00000D 00
```


Best Available Copy

```
 0 0000D-01  1 0000D 00  4.2223D 00  1 6037D 01  1 0000D 00-4 1207D 00  0 0000D-01
 3 7812D 02  6.7138D-01-2.5398D 00  3.4577D 01-4 2260D 02  5 5837D-01-1 1757D 00
 6 5276D 00-2.3223D 01  4.4684D-01-4.8761D-01  3.2632D 00-1 3684D 01  3 9573D-01
-1 0593D-01  4.4986D-01  1.4142D 01  3 8996D-01-2.7672D-02  1.5543D 00-1.1854D 01
 3 9105D-01  5 0668D-02  7 4729D-01  1 5830D 01  3.9858D-01  1 5778D-01  1 9874D 00
 2 4244D 01  4.2295D-01  4 2688D-01  4 1228D 00  1.2707D 02  5.0151D-01  1 4064D 00
 1 6307D 01  3.3159D 03  6 2450D-01  5 2803D 00  1 6111D 02-5 4568D 02  8 6537D-01
 1 0048D 01  1 4406D 02-1 1401D 04  1 0000D 00
 0 0000D-01  1.0000D 00  2.1129D 00  9 2821D 00  1 0000D 00-4 5926D 00  0 0000D-01
 4 4682D 02  6 3698D-01-2 7245D 00  4 0858D 01-5 1961D 02  5 2082D-01-1.1572D 00
 6 3711D 00-2 1520D 01  4 1115D-01-4 7420D-01  3 3461D 00-1 4017D 01  3 6407D-01
-8 2502D-02  4 6440D-01  8 0455D 00  3 5968D-01-2 1704D-02  1 0927D 00  4 4568D 00
 3 6097D-01  6 3008D-02  1.3961D 00-2 4976D 01  3 6819D-01  9 5738D-02-5 6045D-01
 1 1887D 02  3 8799D-01  5 0749D-01  9 9099D 00-1 5572D 02  4 5933D-01  7 4185D-01
-5 0219D 00  5 2786D 03  5 6020D-01  5 5557D 00  2 2549D 02-1 1702D 03  8 3794D-01
 1 2030D 01  1.8892D 02-1 4952D 04  1.0000D 00
 1 0000D 00  1 0000D 00  1.7774D 00  2 4169D 00  1 0000D 00-3 2048D-01  0 0000D-01
 3 8343D 01  9.7558D-01-1.6018D-01  3 5062D 00-5 1329D 00  9 7242D-01  6 1228D-02
 3 1655D 00-1 9667D 01  1 0032D 00  3 1183D-01  4 0095D-01-1 6084D 01  1 0525D 00
 5.4406D-02-2.9058D 00  2.3085D 01  1 0497D 00-1 0212D-01-1 1030D 00  3 9044D 01
 1 0423D 00-8 6744D-02  1 5549D 00-2 8180D 01  1 0380D 00-5 1403D-02-6 5263D-01
 4.2888D 00  1 0314D 00-9.2251D-02-2 7488D-01  3 2154D 01  1 0260D 00  2 9219D-02
 2.8084D 00-4 2678D 02  1.0241D 00-2 5508D-01-1 5829D 01  1 5142D 02  1 0091D 00
-6.7576D-01-1.1097D 01  8.7828D 02  1.0000D 00
 0 0000D-01  1 5000D 00-9.6555D-01  3.6930D-01-1 0000D 00-1 3634D-01  0.0000D-01
-1 4679D 01-1 0143D 00-1.9771D-01-1 3423D 00-3 2931D 01-1 0320D 00-3 5934D-01
-3.5280D 00  2 6686D 01-1.1050D 00-5 9162D-01  2 2310D-01  5 7772D 01-1.1383D 00
 6 7516D-01  1.2100D 01-9.8763D 01-1 0565D 00  1 3190D 00  4 3877D 00  1 4827D 02
-9.4875D-01  1.9612D 00  1.4481D 01  3.9586D 01-7.4751D-01  3 2171D 00  1.7582D 01
-7 4709D 01-4.0445D-01  4.4760D 00  1 1002D 01  1 3405D 02  9 5035D-02  6 1473D 00
 2 3856D 01  3.0793D 03  4.2897D-01  1.0125D 01  1.5833D 02-1 6660D 03  8 1418D-01
 1 4259D 01  1.0627D 02-8.4106D 03  1.0000D 00
 1.0000D 00  1.0000D 00  1.8466D 00  2 4134D 00  1 0000D 00-3 0980D-01  0 0000D-01
 3.6525D 01  9 7633D-01-1.5709D-01  3.3399D 00-2 4340D 00  9 7314D-01  5.9222D-02
 3 1784D 00-1 9767D 01  1.0037D 00  3 1070D-01  3 9969D-01-1 6000D 01  1 0529D 00
 5.4747D-02-2.8896D 00  2.2336D 01  1.0501D 00-1.0280D-01-1 1454D 00  3 9868D 01
 1 0425D 00-8 8397D-02  1.5687D 00-2.8114D 01  1 0382D 00-5 1775D-02-6 3371D-01
 3.8836D 00  1.0316D 00-9.2527D-02-2.9164D-01  3 2133D 01  1 0261D 00  2 7236D-02
 2.7896D 00-4.2476D 02  1.0241D 00-2.5596D-01-1 5760D 01  1 4864D 02  1.0091D 00
-6.7584D-01-1.1115D 01  8.7969D 02  1.0000D 00
 1 0000D 00  1.0000D 00  1.8586D 00  2.0357D 00  1 0000D 00-7.4770D-02  0 0000D-01
 8 8847D 00  9 9430D-01-3.7624D-02  8.1244D-01  4 8605D-01  9 9361D-01  1.7370D-02
 8 4470D-01-5.9380D 00  1.0016D 00  7 7443D-02  1 0013D-02-1 8980D 01  9 9029D-01
-3 2162D-01-3 8921D 00  4 7993D 01  9 5712D-01-4 7922D-01-1 4420D-01  4 1342D 01
 9 2634D-01-3.9324D-01  2.6702D 00-6.7525D 01  8 9831D-01-3 9126D-01-2.6196D 00
 2.8000D 01  8.5688D-01-5 1339D-01-1.5344D-01  7 3163D 01  8 1770D-01-1 9174D-01
 6 8622D 00  1 8629D 03  8 4172D-01  1 8843D 00  8 8215D 01-5 4181D 02  9 4091D-01
 4 3762D 00  7 1285D 01-5.6418D 03  1 0000D 00
 0 0000D-01  5.0000D-01  1.9265D 00  6.3367D 00  1 0000D 00  4 0283D-01  0.0000D-01
-1 5523D 02  1 0171D 00-2.4618D-01-1 4195D 01  2 8156D 02  9 8317D-01-5 6817D-01
 4.4924D 00-3.3535D 01  9.3216D-01-2 6800D-01-2 2158D-01-1.2886D 00  8 7051D-01
-3 4079D-01-4.8650D-01-5.4811D 00  8 4198D-01-3 9549D-01-9 1453D-01-6 1404D 00
 8 1262D-01-4 7198D-01-1.3325D 00  1.0137D 01  7 7237D-01-5 4526D-01-5 3845D-01
 1 3183D 02  7.3727D-01-8.1294D-02  1.1074D 01-8 0215D 01  7.6859D-01  6 1177D-01

 3 3817D 00  1 8630D 03  8.2439D-01  2 5359D 00  8 4740D 01-1 1619D 03  9 3909D-01
 4 6165D 00  4 8432D 01-3 8371D 03  1 0000D 00
```

FILE NO. ML2

FILE SIZE = 14
L/D = 0.5000
ALFA = 1.1250

```
 0.00000D-01  6.48820D-02  1.06430D-01  2.86020D-01  4.46230D-01  5.07150D-01  6.19170D-01
 7.65930D-01  8.87980D-01  9.24910D-01  9.62320D-01  9.77370D-01  9.84290D-01  1.00000D 00
 1.00000D 00  0.00000D-01  8.63680D-01  1.00000D 00  1.00000D 00-2.92070D 00  0.00000D-01
 2.53620D 02  8.22040D-01-2.38690D 00  1.64550D 01-2.21620D 02  7.34430D-01-1.89450D 00
 7.24820D 00-1.06880D 01  5.00760D-01-7.65170D-01  5.32880D 00-2.01500D 01  1.32760D-01
-1.70030D-01  2.10070D 00  1.23690D 00  4.26340D-01-3.97640D-02  2.17600D 00-2.26160D-01
 4.35490D-01  2.02590D-01  2.15070D 00  2.05250D 01  4.99190D-01  7.39230D-01  5.16280D 00
 5.81020D 01  6.45480D-01  1.90210D 00  1.22540D 01  1.66070D 02  7.21780D-01  2.36800D 00
 1.83880D 01  5.12670D 02  8.27700D-01  3.41450D 00  3.75650D 01  7.97200D 02  8.83810D-01
 4.07030D 00  4.95660D 01  1.34260D 04  9.13900D-01  4.72480D 00  1.42470D 02-9.06980D 02
 1.00000D 00
 0.00000D-01-5.00000D-01  1.17050D 02  2.30050D 02  1.00000D 00-1.48770D 00  0.00000D-01
 1.27950D 02  9.09300D-01-1.21840D 00  8.30160D 00-1.36860D 02  8.64220D-01-9.91590D-01
 2.61580D 00-5.34020D 00  7.23160D-01-6.07920D-01  1.65680D 00-6.00850D 00  6.42910D-01
-4.19600D-01  6.94170D-01-8.32750D 00  6.18330D-01-3.92760D-01  1.80870D-01-3.86210D 00
 5.74600D-01-3.96060D-01-2.45800D-01  2.33000D 01  5.26100D-01-1.91240D-01  3.17350D 00
 7.45670D 01  5.50210D-01  7.61510D-01  1.22750D 01  3.74950D 02  5.89860D-01  1.47060D 00
 2.61230D 01  1.84010D 03  6.79190D-01  3.73520D 00  9.49550D 01  1.64290D 04  7.55520D-01
 7.02600D 00  3.42270D 02  1.19310D 04  8.12090D-01  9.68020D 00  4.24830D 02-2.70440D 04
 1.00000D 00
 0.00000D-01  5.00000D-01  2.15530D 01  8.37230D 00  1.00000D 00  1.40820D 00  0.00000D-01
-3.62390D 01  1.09880D 00  1.28980D 00-3.64890D 00  6.89920D 01  1.14010D 00  1.19750D 00
-7.82700D-01-3.89280D 00  1.33880D 00  9.91440D-01-1.48180D 00  1.41740D 00  1.48710D 00
 7.75230D-01-1.25470D 00-1.32450D 01  1.52450D 00  6.74220D-01-2.06160D 00-1.02390D 01
 1.58470D 00  3.79020D-01-3.20860D 00-2.30740D 01  1.59360D 00-3.40320D-01-6.59480D 00
-1.14230D 02  1.46830D 00-1.99610D 00-2.05370D 01-2.60390D 02  1.37840D 00-2.90210D 00
-3.01530D 01-8.59770D 02  1.24010D 00-4.66150D 00-6.23140D 01-2.72770D 02  1.46130D 00
-5.90860D 00-1.03370D 02-5.41730D 03  1.11770D 00-6.75770D 00-1.43860D 02  8.94730D 03
 1.00000D 00
 0.00000D-01  0.00000D-01  2.80160D 00  2.23310D 00  1.00000D 00  3.07770D-01  0.00000D-01
-1.36580D 01  1.01930D 00  2.79020D-01-8.86130D-01  1.41380D 01  1.03030D 00  2.54410D-01
-2.98770D-01-1.57030D 00  1.06970D 00  1.75420D-01-5.90390D 01  1.33120D 01  1.09940D 00
 2.51910D-01  1.53580D 00-6.99040D 01  1.11500D 00  2.17620D-01-2.63170D 00  2.29550D 01
 1.12810D 00  6.41100D-02-7.98080D-02-8.64200D 00  1.15210D 00-4.05220D-02-1.34770D 00
-1.48620D 01  1.11260D 00-3.15690D-01-3.19160D 00-9.59300D 01  1.09460D 00-1.37070D 01
-6.70420D 00-4.54750D 02  1.07070D 00-1.04620D 00-2.77150D 01-2.64850D 02  1.05080D 00
-1.65570D 00-5.45260D 01-1.60280D 03  1.03790D 00-7.07140D 00-6.95160D 01  4.17720D 03
 1.00000D 00
 0.00000D-01  0.00000D-01  3.24190D 01  1.33660D 00  1.00000D 00-7.42190D 00  0.00000D-01
 4.67580D 02  9.60250D-01-1.49770D 00  3.03380D 01  4.88060D 02  6.12260D-01-6.00190D-01
 9.78760D 00-4.98160D 01  8.12780D-01  3.30230D-01  1.04110D 00  2.05630D-01  7.82310D-01
 4.39970D-01  1.07790D 00-1.53010D 01  9.11090D-01  5.37340D-01  1.08750D-01  5.00000D 01
 9.69680D-01  4.59450D-01-1.53460D 00  3.23340D 00  1.02170D 00  2.68060D-01  2.06010D 00
-5.50690D 00  1.04460D 00  9.86370D-02-1.72230D 00-1.65480D 02  1.04560D 00-7.81870D-02
-7.84360D 00-2.20330D 02  1.03530D 00-5.25750D-01-1.78560D 01-2.27720D 02  1.02520D 00
-8.39030D-01-2.35380D 01-7.20400D 02  1.01870D 00-1.01700D 00-2.03310D 01  9.87170D 03
 1.00000D 00
 0.00000D-01  1.50000D 00  3.14090D 00  3.04470D 00  1.00000D 00-1.85040D 00  0.00000D-01
-9.48290D 00  8.98980D-01-1.57040D 00-6.15270D-01  1.55550D 01  3.33060D-01  1.44110D 00
 3.84680D 00-3.76460D 01  6.30500D-01-1.01870D 00-9.14060D-01  2.95970D 01  1.25760D-01
```


Best Available Copy

```
-7.94470-01 3.71390 00-3.56130 00 4.33720-01-5.74830-01 3.49700 00 6.26800 01
 4.05950-01 2.10250-01 1.05190 01-1.03940 02 4.95320-01 6.34630-01-4.73520 00
 2.16630 02 6.03160-01 1.67030 00 2.17050 01-1.18520 03 6.69700-01 1.66360 00
-2.20650 01 2.79640 03 7.40880-01 2.79470 00 8.25410 01 1.48450 04 8.00750-01
 9.71920 00 3.06000 02 4.07310 03 8.47880-01 7.93430 00 3.34190 02-2.12740 04
 1.00000 00
 0.00000-01 1.50000 00 8.73890 00 2.02420 00 1.00000 00 3.75500-02 0.00000-01
-3.37840 01 1.00090 00-3.35600-02-2.19200 00 6.38960 01 9.98400-01-6.77580-02
 5.45610-01-2.40980 01 9.71770-01-3.58390-01-3.78220 00 4.34760 01 8.95600-01
-4.06390-01 3.18300 00 1.85910 01 8.77450-01-1.77990-01 4.31560 00 4.38630 01
 8.94870-01 5.80720-01 9.22940 00 7.33060 00 1.08330 00 2.01410 00 1.03050 01
-5.04760 02 1.25300 00-4.87830-01-5.13020 01 2.56560 03 1.22150 00-6.32880-01
 4.34470 01-5.05970 03 1.18410 00-2.54770 00-1.45820 02 3.70300 03 1.13130 00
-4.32330 00-9.00800 01-1.41220 04 1.09850 00-5.28480 00-1.87810 02 1.19560 04
 1.00000 00
 0.00000-01 1.50000 00 3.26450 00 8.34740-01 1.00000 00 3.81950-01 0.00000-01
-2.27710 01 1.02370 00 3.34020-01-1.47740 00 4.64220 01 1.03690 00 3.12710-01
 4.51170-01-9.52870 00 1.09110 00 2.40070-01-1.26010 00 2.41810 01 1.13000 00
 3.48520-01 2.61400 00-2.87030 01 1.15500 00 4.54500-01 8.65470-01 7.96000 01
 1.23000 00 1.05100 00 9.78280 00-7.74880 01 1.44880 00 1.65220 00-1.58870 00
-1.38290 02 1.59670 00 4.28260-01-1.84670 01-1.81820 03 1.58460 00-1.49370 00
-8.56160 01-1.36840 03 1.45690 00-5.65380 00-1.36810 02-2.15620 04 1.34410 00
-1.01560 01-4.61390 02-1.50700 04 1.26190 00-1.37100 01-5.65670 02 3.60100 04
 1.00000 00
 0.00000-01 1.00000 00-4.09000 00 4.24070 00-1.00000 00 4.17360 00 0.00000-01
-2.93540 02-7.42530-01 3.55780 00-1.89800 01 1.52090 02-6.09280-01 2.90060 00
-1.26620 01 7.25630 01-2.22500-01 1.79680 00 3.69970-01-1.62080 01 5.90050-02
 1.64810 00-2.22670 00 5.19640 01 1.57230-01 1.60890 00 9.38930-01-1.06340 02
 3.18440-01 1.04680 00-1.09740 01 1.53960 02 4.34990-01 1.09420 00 1.16200 01
-3.13440 02 5.60110-01 1.77760-01-2.66370 01 3.42740 03 5.77280-01 1.53130 00
 1.99400 01-2.26560 03 6.84720-01 3.68470 00 1.51910 01 2.52260 04 7.56250-01
 4.77160 00 3.04930 02 5.64110 03 8.12830-01 9.63960 00 4.33970 02-2.76260 04
 1.00000 00
 0.00000-01 1.50000 00-2.45130 00 2.33190-01-1.00000 00-3.74930-01 0.00000-01
 7.59000 00-1.02490 00-3.60720-01 4.37890-01-1.42840 02-1.04030 00-4.65800-01
-5.49640 00 8.56710 01-1.12990 00-7.13330-02 9.88930 00-7.03370 01-1.06260 00
 4.10350-01-1.37940 00 9.40020 01-1.02490 00 6.82190-01 3.73790 00 1.80900 01
-4.29770-01 1.21440 00 5.76440 00 7.54260 01-6.40700-01 2.97260 00 1.68330 01
 7.30640 02-6.44930-02 7.39640 00 5.71980 01-3.12770 02 2.44770-01 9.28530 00
 3.42560 01 9.37210 02 6.02240-01 1.19540 01 8.12320 01-1.60640 04 8.07750-01
 1.28670 01-1.60580 02-2.84330 04 9.79130-01 9.38470 00-3.22740 02 2.05450 04
 1.02090 00
 0.00000-01 1.00000 00-5.01380 00 3.86270 00-1.00000 00 3.20390 00 0.00000-01
-4.69690 02-7.99630-01 2.84670 00-1.10090 01 9.50370 01-6.89930-02 2.47210 00
-2.22670 00 2.69690 01-3.33340-01 1.64350 00-2.20690 00 1.58860 01-8.74100-02
 1.49440 00 3.39450-01-1.13020 02 1.32850-07 1.30540 00-6.54600 00 1.22700 02
 1.71980-01 1.34190 00 7.19840 00-9.53860 01 3.57790-01 1.39460 00-6.88850 00
-4.66470 02 5.17460-01 1.61630 00 1.10120 01-1.45080 03 5.72500-01 1.03360 00
 1.39660 01 5.39460 03 6.29370-01 3.20930 00 1.58880 02 1.97780 04 7.05900-01
-2.24070 00 1.36540 02 1.85390 04 7.72150-01 1.14430 01 5.84830 02-3.72270 04
 1.00050 00
 0.00050-01 1.00000 00-1.46070 00 1.64390 00-1.00000 00 5.84290 00 0.00000-01
-3.36790 02-6.29250-01 4.32940 00-2.13810 01 2.72290 02-5.24570-01 3.61760 00
-1.22930 01 5.39530 01-2.09890-02 2.29040 00-2.59280 03 3.33310 01 3.27020-01
```


Best Available Copy

```
 2.1636D 00 1 1387D 00-3 4492D 02 4 4794D-01 1 5930D 00-1 9837D 01 2 6196D 02
 5 6308D-01 1 0104D 00 9 4729D 00-1.2511D 02 7 4746D-01 1 0334D 00-8 8874D 00
 1 4943D 02 8 5511D-01 1.0817D 00 9 3516D 00 3 6739D 01 9 0175D-01 1 4521D 00
 1.0708D 01-1 0315D 03 9 5456D-01 1 1310D 00-2 7877D 01 3 5364D 03 9 7947D-01
 1 1188D 00 2 6261D 01-1.4341D 03 9.7877D-01 1 2662D 00 1 6337D 01-1 0400D 03
 1.0000D 00
 0 0000D-01 1.0000D 00 3 0670D 00 9.6297D-01 1 0000D 00 6 3190D-01 0 0809D-01
-3 0639D-01 1 0409D 00 6.3035D-01-1 9879D-02 4.7902D 01 1 0477D 00 6 7986D-01
 1.9702D 00-2 5777D 01 1 1950D 00 6 0999D-01-2 6592D 00-5 0694D 00 1 2550D 00
 1.1789D-01-3.4714D 00 7 8499D 01 1 2587D 00 5 2081D-02 1 3107D 00-3 0425D 01
 1.2656D 00 7.9937D-03-2.0978D 00-1 7488D 01 1 2350D 00-4 8818D-01-4 6642D 00
 6 9489D 01 1.1617D 00-5 3987D-01 3 8172D 00-5 2390D 02 1 1409D 00-7 5617D-01
-1 5531D 01 2 6698D 02 1 1032D 00-1 1504D 00-5 5440D 00-7 9767D 03 1 0807D 00
-2 1376D 00-1 2562D 02-5 3261D 03 1 0626D 00-3 1344D 00-1 6248D 02 1 0343D 04
 1 0000D 00
```

FILE NO. ML3-05-2

```
      FILE SIZE =   14
      L/D       =    0.5000
      ALFA      =    1.1250
 0.0000D-01 5.8456D-02 8.0138D-02 1.2718D-01 2.8602D-01 4.4623D-01 5.7427D-01
 6.5943D-01 7.6051D-01 8.5185D-01 8.8194D-01 9.1245D-01 9.4974D-01 1.0000D 00
 1.0000D 00 0.0000D-01 5.0069D-01 1.0000D 00 1.0000D 00-5 3357D-01 0.0000D-01
-5.6076D 01 9.6694D-01-6.2938D-01-3.2779D 00 8.3405D 01 9 5267D-01-6.8084D-01
-1.4695D 00-4.3805D 01 9 1826D-01-7.9843D-01-3 5301D 00 4 0046D 01 7.7365D-01
-8.5396D-01 2.8309D 00-7.1251D 00 6.6828D-01-4.9186D-01 1 6894D 00 7.1130D 00
 6.2164D-01-2.1724D-01 2.6001D 00 8.8307D 00 6 1348D-01 3 6220D-02 3.3522D 00
 1.7890D 01 6 3734D-01 4.6644D-01 5 1605D 00 5.8361D 01 7.0889D-01 1.1813D 00
 1.0491D 01-3.0949D 01 7.4904D-01 1.4829D 00 9 5602D 00 6 9803D 02 8 0203D-01
 2.0994D 00 3.0854D 01-1.2148D 03 8 9128D-01 2.4053D 00-1 4449D 01 2.8750D 02
 1.0000D 00
 0.0000D-01-5.0000D-01 8.2613D 01 9.2485D 01 1.0000D 00-1.3656D 00 0.0000D-01
 1.5817D 02 9.2544D-01-1.0954D 00 9.2457D 00-3.1815D 02 9 0332D-01-9.6967D-01
 2.3474D 00-1.3162D 01 8.6008D-01-8.7381D-01 1.7283D 00 2.6887D 00 7.4488D-01
-5.6538D-01 2.1554D 00-4.0387D 00 6.7919D-01-2.7190D-01 1.5083D 00 7.4973D-01
 6 5701D-01-7.2623D-02 1.6043D 00 4.6471D 00 6.5712D-01 8 0860D-02 2.0001D 00
 1.2658D 01 6.7769D-01 3.4769D-01 3.2795D 00 3.8726D 01 7 2805D-01 8.0881D-01
 6.8169D 00 1.3700D 02 7.5609D-01 1.0759D 00 1.0939D 01 8 7686D 01 7 9442D-01
 1.4504D 00 1.3614D 01 4.2870D 02 8.6168D-01 2.2563D 00 2.9602D 01-5.8899D 02
 1.0000D 00
 0.0000D-01 5.0000D-01 2.1150D 01 1.3102D 01 1.0000D 00 1 3057D 00 0.0000D-01
-1.0084D 02 1.0730D 00 1.1334D 00-5.8946D 00 1.8905D 02 1.0965D 00 1.0500D 00
-1.7954D 00-1.7193D 01 1.1436D 00 9.4656D-01-2.6042D 00 8 8493D 00 1 2670D 00
 6.4454D-01-1.1986D 00-1.2741D 00 1.3540D 00 4.3617D-01-1 4027D 00-4.5974D 00
 1.3967D 00 2.1888D-01-1.9913D 00-1.1394D 01 1.4070D 00 7.9694D-03-2.9617D 00
-2.3121D 01 1.3887D 00-4.0950D-01-5.2987D 00-3.8437D 01 1 3243D 00-1.0539D 00
-8.8097D 00-1.4518D 02 1.2879D 00-1 3846D 00-1 3178D 01-1 0897D 02 1 2391D 00
-1.8373D 00-1.6502D 01-2.9188D 02 1.1565D 00-2.6558D 00-2.7388D 01 5.4494D 02
 1.0000D 00
 0.0000D-01 0.0000D-01 3.7759D 00 3.3088D 00 1.0000D 00 1 7235D-01 0 0000D-01
-9.7138D 00 1.0098D 00 1.5576D-01-5.6783D-01 2.1909D 01 1 0130D 00 1 4859D-01
-9.2778D-02-1.4656D 01 1.0197D 00 1.2802D-01-7.8220D-01 1 9933D 00 1.0315D 00
 2.8918D-02-4.6558D-01 3.0967D 00 1.0322D 00-5.9309D-03 3 0546D-02-1 2509D 00
 1.0313D 00-1.2273D-02-1.2962D-01 1.8661D 00 1.0300D 00-1 6545D-02 2 9307D-02
-3.3162D 00 1.0279D 00-3.0523D-02-3.0589D-01 1 8043D 00 1 0249D 00-5.0936D-02
-1.4107D-01-3.3386D 01 1.0223D 00-7.0293D-02-1 1456D 00-3 8237D 01 1.0194D 00
-1.2303D-01-2.3121D 00-1.0393D 01 1.0132D 00-2.1648D-01-2 6997D 00 5.3716D 01
 1.0000D 00
 0.0000D-01 0.0000D-01 1.4757D-01 1 1742D 00 1 0000D 00-7.2398D 00 0.0000D-01
 2 3162D 03 6.5390D-01-3.2825D 00 1.3540D 02-4.8483D 03 6 0632D-01-1 4864D 00
 3 0271D 01-2.1834D 02 5.6610D-01-3 0409D-01 2 0001D 01-1 5592D 02 6 6596D-01
 9 0588D-01-4.7655D 00 2.9430D 01 7.7011D-01 5 2010D-01-5 0441D-02-6 4343D 00
 8 3403D-01 4.6089D-01-8.7430D-01 5.7368D 00 8 7071D-01 4 0724D-01-3 8572D-01
 1.0695D 00 9.1008D-01 3.7371D-01-2.7763D-01 5 7134D 00 9 4379D-01 3.7219D-01
 2 4426D-01 1 5404D 01 9 5517D-01 3.8651D-01 7 0772D-01-2 1542D 01 9 6718D-01
 3.9808D-01 5.0565D-02-2.9451D 01 9 8181D-01 3.7948D-01-1 0478D 00 2 0848D 01
 1.0000D 00
 0 0000D-01 2.0000D 00 3.6916D-01 1 5785D 00 1 0000D 00-7 7433D 00 0 0000D-01
 2 0190D 03 6.1457D-01-4.2939D 00 1 1802D 02-3 4366D 02 5 4663D-01-1 8157D 00
 1.1057D 02-2 4381D 03 5.4325D-01 6 9801D-01-4 1158D 00 3 6751D 01 6 2516D-01
```

```
 4.97860-01 1.7216D 00-6.2920D-01 7 2659D-01 7 65610-01 1 6208D 00-4 1970D 01
 8.2322D-01 6.2910D-01-3.7531D 00 3.8616D 01 8.6716D-01 4 4951D-01-4 6436D-01
-2.4871D 01 9.0594D-01 2.7553D-01-2.9783D 00 4 7792D 01 9 2476D-01 2 0286D-01
 1.3873D 00 1.2931D 02 9.3208D-01 3.0313D-01 5 2780D 00-4 0105D 01 9 4359D-01
 4.4548D-01 4.0546D 00 4.7669D 01 9 6343D-01 6 2984D-01 5 8323D 00-1 1605D 02
 1.0000D 00
 0.0000D-01 1.5000D 00 5.3696D 00 6.0821D 00 1.0000D 00-3 1440D 00 0 0000D-01
 5.6238D 02 8.3490D-01-2.1837D 00 3.2875D 01-1 2055D 01 7 9526D-01-1 4738D 00
 3.2613D 01-5.3931D 02 7.5266D-01-5.3633D-01 7 2448D 00-3 5800D 01 7 3495D-01
 1.6281D-01 1.5583D 00-9.7503D 00 7.7435D-01 2.8732D-01-3 8301D-03 4 3924D 00
 8.1265D-01 3.2284D-01 5.5858D-01 1.5423D 01 8.4375D-01 4 2634D-01 1 8726 00
-5 5454D 01 8.8687D-01 3.3229D-01-3 7331D 00 9 6031D 01 9 1384D-01 3 9192D-01
 5.0388D 00-1.3079D 01 9.2786D-01 5.3761D-01 4 6153D 00-1 0105D 02 9 4594D-01
 6 3230D-01 1.5626D 00-8 8419D 01 9 6984D-01 6    09D-01-1 7349D 00 3 45.9D 01
 1 0000D 00
 0 0000D-01 1 5000D 00 2.5139D 00 5 3359D 00 1 9000D 00-1 8209D 00 0 9000D-01
 7.3072D 01 8.9599D-01-1.6961D 00 4 2715D 00 1 8238D 02 8 6053D-01-1 5606D 00
 8.2259D 00 1.4067D 02 7.9866D-01-1 0180D 00 1 4843D 01-1 0878D 02 7 5156D-01
-3.2502D-02-2.4351D 00 2.6829D 01 7.3349D-01-7 8304D-02 1 8633D 00-1 3513D 01
 7 3401D-01 4.9503D-02 1.3307D-01 1.5270D 01 7 4028D 01 1 1621D-01 1 4775D 00
-2 6720D 01 7.5475D-01 1 2460D-01-1 2674D 00 7 4292D 01 7 7028D-01 3 .85D-01
 5 5184D 00-3 8087D 02 7 8064D-01 3 1238D-01-5 9419D 00 1 4926D 03 7 9447D-01
 8 2577D-01 3.9596D 01-2 4635D 01 8 5258D-01 2.2852D 00 3 8677D 01-7 6954D 02
 1.0000D 00
 1 5000D 00 1.5000D 00 6 9277D 00 2 3031D 00 1 0000D 00-1 0405D 00 0 0000D-01
 9 5937D 01 9.4237D-01-8.7659D-01 5 6081D 00-3 3076D 02 9 2412D-01-8 3275D-01
-1 5635D 00 5.3106D 02 8 9243D-01-3 1869D-01 3 7418D 01-2 0546D 02 1 0000D 00
 8 0910D-01-9 2174D 00 5 6404D 01 1 0500D 00 5 6309D-02-1 8093D-01-3 5043D 00
 1 0545D 00 4.4008D-03-6 2988D-01 7 8619D 00 1 0534D 00-2 0732D-02 3 3637D-02
-6 2115D-01 1 0514D 00-1.9899D-02-2 3149D-02-5 8940D 01 1 0420D 00-2 6788D-01
-5 4068D 00 3 9824D 02 1.0333D 00-2 5029D-01 6 5762D 00-5 1220D 02 . 0243D 00
-2 8804D-01-9 0516D 00 3.9735D 02 1 0127D 00-3 4929D-01 5 7661D 00-1 1473D 02
 1 0000D 00
 0 0000D-01 2 0000D 00-2 2710D 00 5 0823D-01-1 0000D 00-4 0206D 00 0 0000D-01
 8 5947D 02-1 2064D 00-2 5521D 00 5 0241D 01-4 5149D 01-1 2500D 00-. 4774D 00
 4 9262D 01-9 6079D 02-1 2915D 00-2 1909D-01 4 0676D 00-1 7622D 01-1 2744.D 00
 2 5516D-01 1 9038D 00 4 8006D 01-1 1753D 00 1 1763D 00 4 5949D 00-5 3545D 00
-9 4847D-01 2 3609D 00 8.9093D 00 1 0428D 02-7 0476D-01 3 -975D 00 1 7796D 01
-2 5210D 01-2 6427D-01 5 1672D 00 1 5243D 01-7 7263D 01 3 6150D-01 8 2774D 00
 8 1897D 00-9 0262D 02 4 4878D-01 6 0752D 00-1 6968D 01 3 1796D 02 6 2e3.D-01
 5 5980D 00-1.2313D 01-9 9200D 02 8 .794D-01 4 4487D 00-4 9350 0. 3 8122D 02
 1 0000D 00
 1 5000D 00 1 5000D 00 6 9277D 00 2 3174D 00 1 0000D 00-1 0415D 00 0 0000D-01
 9 6076D 01 9.4220D-01-8 7934D-01 5 6102D 00-3 3076D 02 9 2412D-01-8 3275D-01
-1 5843D 00 5.3336D 02 8 9268D-01-3 1869D-01 3 7418D 01-2 0546D 02 1 0000D 00
 8 1180D-01-9 2514D 00 5 6427D 01 1 0500D 00 5 6309D-02-1 8093D-01-3 5043D 00
 1.0545D 00 1 1425D-02-4 5010D-01-4 2923D 00 1 0574E 00-4 2.7%D-01-3 1432D-01
 2 0055D 01 1 0484D 00-2 2346D-02 1 2142D 00-7 8177D 01 1 0121D 00-2 2489D-01
-5 5594D 00 1 0195D 02 1 0327D 00-3 4207D-01-2 4%.6D 01    1 7 D 00    1%.1D 00
-4 0876D-01-1 8846D 00 2 7227D 02 1 0077D 00-2 6%74E 01 . .   .-.-D 00    %.4D 0 02
 1 0000D 00
 5 0000D-01 1 5003D 00 1 7285D 00 9 6%72D 00 1 %0%1E 00-% 6.%%D 00 0 0000D-01
 6 5572D 03 8 0079D-01 5 %0059 00 3 5%71E 02-4 2%%1. 0- . 0.0.D 00 3 0%.7E 0%
-5 3700D 02 1 4059D 04 8 4503D-01-5 0%1%E 00 1 .-0%D 01 0 1%0 07 8 4%02D 01
```

```
3373D 00-3.4868D 01 2.7976D 02 8 0620D-01-6 5859D-01 9.9523D 00-9.5626D 01
7309D-01-1 6815D-01-2 2917D 00 2 6420D 01 7 5009D-01-2.6751D-01-4.1743D-02
1487D 01 7 2086D-01-3.3041D-01-1 2028D 00 2.4900D 02 7 1739D-01 6 0178D-01
1614D 01-1 5620D 03 7 3819D-01 5 4503D-01-2 5386D 01 2.7224D 03 7 5589D-01
0376D 00 5 7675D 01-5 8000D 02 8 2967D-01 2 7851D 00 3 6047D 01-7.1722D 02
0000D 00
0000D-01 1 0000D 00 4 6810D 00 6 5993D 00 1 0000D 00 2 3340D 00 0 0000D-01
[illegible] 02 1 [illegible] 00 [illegible] 3615D-01-4 7527D 01 6 7361D 02 1 1194D 00 5 7502D-02
[illegible] 01 6 37[illegible] 02 1 0964D 00-6 0037D-01-3 2512D 00 4 8981D 01 9 6097D-01
[illegible]-01 4 [illegible] 00-3 5461D 01 8 6282D-01-4 2840D-01-1 1522D 00 2 9087D 01
[illegible]70D-01-3 3749D-01 2 5721D 00 1 1[illegible]90D 01 8 1051D-01-7 5334D-02 3 5847D 00
2602D 01 9 0699D-01-1 3497D-01-4 7647D 00 1 4263D 02 7 9290D-01 2 4777D-02
[illegible]27D 00 1 1809D 01 7 9744D-01 2 7978D-01 2 6198D 00-4 7690D 02 8 0770D-01
[illegible]D-01-5 9303D 00 2 4609D 03 8 3677D-01 1 8097D 00 8 5831D 01-1 7079D 03
0000D 00
```

FILE NO. ML2-05-3

```
      FILE SIZE =   10
      L/D       =    0.5000
      ALFA      =    1.1250
 0.0000D-01 1.0643D-01 2.0721D-01 3.9422D-01 5 8206D-01 7 2848D-01 8 4590D-01
 8.9404D-01 9.3733D-01 1.0000D 00
 1.0000D 00 0.0000D-01 4.0462D-01 1.0000D 00 1 0000D 00-1 4002D 00 0 0000D-01
 4.8832D 01 8.6079D-01-1.1237D 00 5 1970D 00-3 4539D 01 7 6804D-01-7 7530D-01
 1.7159D 00 2.6783D-01 6.5335D-01-4 4974D-01 1.7659D 00 2 7946D 00 6 0311D-01
-6.3717D-02 2.2909D 00 2.0155D 01 6 2815D-01 4 8273D-01 5 2418D 00 3 2922D 01
 7.2985D-01 1.3252D 00 9.1076D 00-1.1108D 02 8 0213D-01 1 6349D 00 3 7604D 00
 4.6368D 01 8.7706D-01 1.8412D 00 5 7678D 00-9 2035D 01 1 0000D 00
 0.0000D-01-5.0000D-01 9.3085D 01 2.6104D 02 1 0000D 00-1 2567D 00 0 0000D-01
 4.9240D 01 8.7615D-01-9.7780D-01 5.2404D 00-3 7927D 01 7 9775D-01-8 4227D-01
 1.4178D 00-1.7133D 00 7.0056D-01-4.0710D-01 1.0974D 00 3 3355D-01 e 4382D-01
-1.9507D-01 1.1600D 00 1.0769D 01 6.3333D-01 9.0193D-02 2 7367D 00 5 4005D 01
 6.7736D-01 7.8386D-01 9.0781D 00 8.5391D 01 7 2719D-01 1 3198D 00 1 3189D 01
 5.2392D 02 8.0378D-01 2.3818D 00 3.5871D 01-5.7238D 02 1 0000D 00
 0.0000D-01 0.0000D-01 2.8445D 01 4.9458D 01 1 0000D 00-9 7104D-01 0 0000D-01
 4.0172D 01 9.0473D-01-7.4354D-01 4 2753D 00-3 0563D 01 8 4629D-01-4.6787D-01
 1.1945D 00-2 3730D 00 7 7710D-01-2 8591D-01 7 5112D-01-1 0476D 00 7 3549D-01
-1.6330D-01 5.5433D-01 7.7351D 00 7.2157D-01 7.6777D-04 1 6868D 00 1 6715D 01
 7.3780D-01 3.1408D-01 3.6496D 00 4.8854D 02 7.6622D-01 1 0558D 00 2 7167D 01
-9.9503D 01 8.3605D-01 2.1387D 00 2 2859D 01-3 6475D 02 1 0000D 00
 0.0000D-01 0.0000D-01 2.4091D 00 2.1973D 00 1 0000D 00 1 2224D-01 0 0000D-01
-2.9901D 00 1.0124D 00 1.0530D-01-3 1823D-01 2 3644D 00 1 0218D 00 8 5237D-02
-7.9927D-02-1.2061D-01 1.0362D 00 6.8181D-02-1 0248D-01 5 6920D-01 1.0478D 00
 5.8973D-02 4.4396D-03-2.0372D 00 1 0555D 00 3 7788D-02-2 9383D-01-4 6765D 00
 1.0566D C0-2.8955D-02-8.4296D-01-1.1101D-02 1 0522D 00-1 9814D-01-6 1865D 00
-3.8930D 00 1.0378D 00-4.6963D-01-6.3550D 00 1 0141D 02 1 0000D 00
 0.0000D-01 0.0000D-01 6.5253D-01 1 4195D 00 1 0000D 00-1 4453D 00 0 0000D-01
 7.4586D 01 8.6116D-01-1 0229D 00 7 9378D 00-5 6654D 01 7 8871D-01-5 1066D-01
 2.2277D 00-2 9729D 00 7.2893D-01-1 4605D-01 1 6718D 00 6 2461D-01 7 3168D-01
 1.7901D-01 1 7891D 00 1.0308D 01 7.8246D-01 5 5146D-01 3 2984D 00 9.4298D 00
 8.7250D-01 1 0038D 00 4.4057D 00-2 1337D 02 9 2195D-01 9 6865D-01-5 8652D 00
 3.4853D 01 9.5886D-01 7.4739D-01-4.2563D 00 6 9513D 01 1 0000D 00
 0.0000D-01 1.5000D 00 1.0626D 01 2 3142D 00 1 0000D 00-5 9690D-03 0 0000D-01
-1.3568D 01 9.9664D-01-8 2809D-02-1 4440D 00 6 0300D 00 9 8199D-01-1 9772D-01
-8.3625D-01 6.2480D-01 9.3107D-01-3.4318D-01-7.1941D-01 9 3886D-01 8 5495D-01
-4.6175D-01-5.4305D-01 9.5720D 00 7.8653D-01-4 3867D-01 8 5842D-01 1 3833D 01
 7.4467D-01-2.4250D-01 2 4827D 00 6.7083D 02 7.4835D-01 6 5427D-01 3 4777D 01
 7.6403D 01 8.1030D-01 2.2315D 00 3.8084D 01-6 0770D 02 1 0000D 00
 0.0000D-01 1.0000D 00 2.1912D 01 1 1511D 01 1 0000D 00-7 6253D-01 0 0000D-01
 1.2781D 01 9.2142D-01-6.9014D-01 1 3602D 00-7 6343D 00 8 5746D-01-5 9183D-01
 5.9077D-01-3.4084D 00 7.5340D-01-5.4095D-01-4 6613D-02 2 3120D 00 6 5352D-01
-5.0891D-01 3.8769D-01-7.3329D 00 5 7933D-01-5 3075D-01-6 8595D-01 1 2553D 02
 5.4615D-01 2.5415D-01 1.4055D 01 4 0033D 02 5 8211D-01 1 3945D 00 3 3325D 01
 8.1318D 02 6.8471D-01 3.5994D 00 6 8531D 01-1 0935D 03 1 0000D 00
 0.0000D-01 1.0000D 00 5.5288D 00 5 6416D 00 1 0000D 00-1 4184D 00 0 0000D-01
 4.4925D 01 8.5807D-01-1.1640D 00 4.7812D 00-3 0258D 01 7 5987D-01-8 3580D-01
 1.7315D 00-1 4610D 00 6.3226D-01-5 3754D-01 1 4563D 00-4 2289D 00 5 5234D-01
-3.3822D-01 6.6392D-01 2.4990D 01 5.2301D-01 2 6841D-02 4 3228D 00 4 3440D 01
 5.6768D-01 8.3392D-01 9.4237D 00 4 0043D 02 6 2619D-01 1 7515D 00 2 8699D 01
 3.5592D 02 7.3372D-01 3.3275D 00 4.4108D 01-7 0382D 02 1 0000D 00
```

```
 0 0000D-01 1 5000D 00-8 4758D 00 8 8493D-01-1 0000D 00-1 3872D-01 0 0000D-01
 2 7201D 01-1 0093D 00 1 5325D-02 2 8949D 00 2 4849D 00-9 9267D-01 3 1972D-01
 3 1453D 00 6 9538D-01-8 7708D-01 9 2007D-01 3 2754D 00 6 9361D 00-6 3873D-01
 1 6588D 00 4 5899D 00 5 4465D 01-3 1818D-01 2 9146D 00 1 2564D 01 2 5044D 02
 1 7827D-01 6 1165D 00 4 1972D 01-2 1913D 03 4 8059D-01 5 5981D 00-6 3510D 01
 1 8707D 03 6 8873D-01 4 6017D 00 1 7480D 01-2 7892D 02 1 0000D 00
 0 0000D-01 1 5000D 00-7 4323D 00 2 7935D-01-1 0000D 00-5 7056D-03 0 0000D-01
 5 3378D-01-1 0005D 00-2 6825D-03 5 6316D-02 1 0659D 00-1 0007D 00 8 4559D-03
 1 6423D-01-3 8101D 00-1 0000D 00-2 7456D-02-5 4830D-01 2 1773D 01-3 9078D-01
 2 5366D-01 3 5414D 00 1 9624D 01-9 0541D-01 9 8255D-01 6 4149D 00 4 7690D 02
-6 1714D-01 5 0234D 00 6 2412D 01-3 7831D 02-3 1097D-01 7 5895D 00 4 4200D 01
 2 2235D 03 9 0001D-02 1 1586D 01 1 4045D 02-2 2412D 03 1 0000D 00
 0 0000D-01 1 5000D 00-8 4758D 00 8 8493D-01-1 0000D 00-1 3872D-01 0 0000D-01
   7201D 01-1 0093D 00 1 5325D-02 2 8949D 00 2 4849D 00-9 9267D-01 3 1972D-01
 3 1453D 00 6 9538D-01-8 7708D-01 9 2007D-01 3 2754D 00 6 9361D 00-6 3873D-01
   6588D 00 4 5899D 00 5 4465D 01-3 1818D-01 2 9146D 00 1 2564D 01 2 5044D 02
 1 7827D-01 6 1165D 00 4.1972D 01-2 1913D 03 4 8059D-01 5 5981D 00-6 3510D 01
 1 8707D 03 6 8873D-01 4 6017D 00 1 7480D 01-2 7892D 02 1 0000D 00
 0 0000D-01 1 0000D 00-3 7447D-01 1 6974D 00-1 0000D 00 4 5578D 00 0 0000D-01
   4160D 02-5 6347D-01 3 1896D 00-2 5712D 01 2 6028D 02-3 2809D-01 1 9231D 00
 5 6134D-01-1 5362D 01 2 4970D-02 1 7632D 00-2 2913D 00 5 2552D 00 3 2156D-01
 1 4255D 00-1 3042D 00 3.1286D 01 5 3266D-01 1 5699D 00 3 2765D 00-3 9315D 01
 7 2098D-01 1 6836D 00-1 3400D 00 6 6094D 01 8 0970D-01 1 6957D 00 1 8415D 00
 1 1529D 01 8 8500D-01 1 7862D 00 2 3407D 00-3 7349D 01 1 0000D 00
 0 0000D-01 5 0000D-01 5 9536D 00 4 9115D 00 1 0000D 00 1 1709D 00 0 0000D-01
 4 9342D 01 1 1147D 00 8 9149D-01-5 2512D 00 4 8547D 01 1 1862D 00 6 0881D-01
 1 5820D-01-2 0828D 00 1 2915D 00 5 0540D-01-7 4769D-01-8 3073D 00 1 3641D 00
   1839D-01-2 3082D 00 1 7969D 01 1 3807D 00 7 3045D-02 3 2278D-01-2 3664D 02
 1 3276D 00-1 5205D 00-2.7464D 01 6 7655D 02 1 2352D 00-2 0587D 00 5 1031D 00
-3 2863D 02 1 1464D 00-2 1457D 00-9 1243D 00 1 4559D 02 1 0000D 00
```

```
 RETRIEVAL FILE NO  ML3-05-1
       FILE SIZE =   17
       L/D       =    0.5000
       ALFA      =    1.1250
 0.00000D-01  3.57680D-02  5.84560D-02  8.01380D-02  1.27180D-01  2.07210D-01  2.86020D-01
 4.46230D-01  5.74270D-01  6.59430D-01  7.60510D-01  8.16420D-01  8.45700D-01  8.75900D-01
 9.06400D-01  9.37390D-01  1.00000D 00
 1.00000D 00  0.00000D-01  1.00010D 00  1.00000D 00  1.00000D 00-1.65020D 00  0.00000D-01
 1.90030D 02  9.42490D-01-1.52360D 00  7.08300D 00-1.32930D 02  9.09480D-01-1.39710D 00
 4.06710D 00-6.64480D 01  8.80030D-01-1.32450D 00  2.62640D 00  1.20600D 01  8.20850D-01
-1.18760D 00  3.19370D 00  1.38680D-02  7.36020D-01-9.31970D-01  3.19480D 00-1.72650D 00
 6.72360D-01-6.85570D-01  3.05870D 00-3.44650D 00  5.99420D-01-2.39770D-01  2.50660D 00
 6.89590D-01  5.89500D-01  8.60330D-02  2.59490D 00  5.20710D 00  6.06850D-01  3.26710D-01
 3.03830D 00  1.06590D 01  6.57220D-01  6.98260D-01  4.11570D 00  2.43960D 01  7.03030D-01
 9.57570D-01  5.48450D 00  2.60150D 01  7.33400D-01  1.12960D 00  6.24320D 00  3.49710D 01
 7.70260D-01  1.33180D 00  7.29310D 00  6.28690D 01  8.14710D-01  1.58430D 00  9.21650D 00
 3.48830D 01  8.68410D-01  1.88670D 00  1.02980D 01-1.64460D 02  1.00000D 00
 0.00000D-01-5.00000D-01  9.00000D 01  1.00070D 02  1.00000D 00-2.26980D 00  0.00000D-01
 5.04120D 02  9.22660D-01-1.94730D 00  1.80310D 01-4.90540D 02  8.82160D-01-1.66450D 00
 6.90200D 00  4.23780D 01  8.47770D-01-1.50490D 00  7.82080D 00-4.84120D 01  7.84790D-01
-1.19050D 00  5.54360D 00-2.10330D 01  7.05460D-01-8.14220D-01  3.86010D 00-1.51020D 01
 6.52050D-01-5.57170D-01  2.66380D 00-6.86340D 00  5.92270D-01-2.18490D-01  1.56420D 00
 9.32160D-01  5.77440D-01-1.05730D-02  1.68350D 00  4.18080D 00  5.03070D-01  1.47960D-01
 2.03960D 00  1.57150D 01  6.11150D-01  4.34400D-01  3.62800D 00  4.40050D 01  6.42330D-01
 7.07200D-01  6.09690D 00  5.99160D 01  6.66000D-01  9.10500D-01  7.84430D 00  1.35400D 02
 6.97480D-01  1.20700D 00  1.19090D 01  1.66820D 02  7.40780D-01  1.04940D 00  1.70170D 01
 5.48400D 02  8.02780D-01  2.44000D 00  3.40080D 01-5.43150D 02  1.00000D 00
 0.00000D-01  5.00000D-01  1.04630D 01  1.73060D 01  1.00000D 00  1.26030D 00  0.00000D-01
-3.12070D 02  1.04270D 00  1.06070D 00-1.11620D 01  3.52550D 02  1.06460D 00  8.98190D-01
-3.16360D 00-1.95380D 01  1.08330D 00  8.25000D-01-3.58720D 00  2.16390D 01  1.11850D 00
 6.80200D-01-2.56940D 00  7.02050D 00  1.16530D 00  4.97040D-01-2.00750D 00  5.12240D 00
 1.19870D 00  3.54750D-01-1.60380D 00-9.99000D-01  1.22420D 00  8.40910D-02-1.76390D 00
-9.96380D-01  1.23030D 00-1.49040D-01-1.89140D 00-3.77060D 00  1.21040D 00-3.33740D-01
-2.21260D 00-6.97000D 00  1.16510D 00-5.83040D-01-2.91710D 00  5.66790D 00  1.12800D 00
-7.37780D-01-2.59910D 00  4.70460D 01  1.10560D 00-7.93580D-01-1.22700D 00-9.12030D 01
 1.08080D 00-8.71550D-01-3.96700D 00  4.54200D 02  1.05440D 00-7.80320D-01  9.93060D 00
-2.43520D 02  1.03380D 00-5.69500D 01  2.70290D 00-3.60740D 01  1.00000D 00
 0.00000D-01  0.00000D-01  4.71330D 00  4.07110D 00  1.00000D 00  7.72860D-02  0.00000D-01
-2.95110D 01  1.00250D 00  5.84090D-02-1.05550D 00  1.05400D 01  1.00360D 00  3.71730D-02
-9.16400D-01  2.64340D 01  1.00430D 00  2.56860D-02-2.43230D-01-2.22450D 00  1.00520D 00
 1.17830D-02-3.47970D-01  2.51140D 00  1.00520D 00-8.01560D-03-1.46070D-01  2.75070D 00
 1.00440D 00-1.10480D-02  6.90980D-02-2.53570D-01  1.00330D 00-3.10420D-03  2.92740D-02
 4.73360D-01  1.00330D 00  4.52440D-03  8.98040D-02-9.16810D-01  1.00390D 00  8.05450D-03
 1.13040D-02  3.86670D-01  1.00500D 00  1.20230D-02  5.09860D-02  2.54780D-01  1.00570D 00
 1.54250D-02  7.07660D-02-2.06760D 01  1.00610D 00  8.70610D-03-5.72240D-01  1.72940D 01
 1.00620D 00  5.20800D-04-1.30250D-02-3.91620D 01  1.00600D 00-1.82040D-02-1.21110D 00
 2.42030D 00  1.00490D 00-5.45740D-02-1.13610D 00  1.81450D 01  1.00000D 00
 1.00000D 00  0.00000D-01  1.49020D 00  1.61700D 00  1.00000D 00-5.90800D 00  0.00000D-01
 1.27530D 02  9.45600D-01-1.46650D 00  4.56160D 00-1.18670D 02  9.13270D-01-1.39350D 00
 1.99910D 00-7.36180D 01  8.93620D-01-1.27520D 00  3.46530D 00-1.62030D 01  9.23350D-01
-1.13060D 00  2.70730D 00  7.55660D 00  7.38340D-01-9.50040D-01  3.30900D 00  1.02870D 00
 6.73390D-01-7.03810D-01  2.94130D 00-2.41670D 00  5.96720D-01-2.67600D-01  2.55410D 00
 7.02200D-01  5.84150D-01  6.91900D-02  3.64410D 00  4.60070D 00  6.00110D-01  3.31060D-01
 3.03590D 00  1.13620D 01  6.49010D-01  6.73060D-01  4.18420D 00  2.12110D 01  6.04440D-01
```

```
 9.59840-01 5 9354D 00-7 6498D 00 7 2493D-01 1 1297D 00 5 7123D 00 5 4438D 01
 7 6166D-01 1.3257D 00 7.3467D 00 1 2255D 01 8 0572D-01 1 5562D 00 7 7216D 00
 2 6260D 02 8 5896D-01 1 9216D 00 1 5860D 01-2 5330D 02 1 0000D 00
 1 0000D 00 2 5000D 00-5 5102D-01 9 0173D-01-1 0000D 00 2 4323D 00 0 0000D-01
 7 1487D 02-9.0755D-01 2.8896D 00 2 5569D 01-9 1419D 02-8 3719D-01 3 2344D 00
 4 8283D 00 5.0437D 02-7.6507D-01 3.4576D 00 1 5764D 01-2 2806D 02-5 8893D-01
 3 9469D 00 5 0357D 00-2 7454D 00-2 5717D-01 4 3411D 00 4 8160D 00-2 0724D 02
 8 3300D-02 4 0770D 00-1.1517D 01 5 9633D 01 6 2925D-01 2 9972D 00-1 9670D 00
-1 1046D 02 9 5828D-01 1 8404D 00-1 6106D 01 1 0971D 02 1 0679D 00 8 6662D-01
-6 7639D 00-6 0643D 00 1 1199D 00 1.5194D-01-7 3769D 00-4 4883D-01 1 1168D 00
-2 6268D-01-7 4020D 00 4 8558D 02 1 1020D 00-2 7207D-01 6 7576D 00-6 3813D 02
 1 1000D 00-3 5675D-01-1 2399D 01 2 6049D 02 1 0850D 00-5 6738D-01-1 3678D 00
-3 5481D 02 1.0650D 00-7 8015D-01-1 2763D 01 1 9747D 02 1 0000D 00
 0.0000D-01 1 5000D 00 2.0058D 00 1.4450D 01 1 0000D 00-1 8609D 00 0 0000D-01
-9 6880D 02 9 2605D-01-2 4806D 00-3 4452D 01 2 2807D 03 8 6529D-01-2 6798D 00
 1 7092D 01-1 9040D 02 8 1068D-01-2 3540D 00 1 2964D 01 2 1440D 01 7 1486D-01
-1 7204D 00 1 3973D 01-7 1428D 01 6 1582D-01-8 3691D 01 8 2564D 00-7 3256D 01
 5 7000D-01-4.0772D-01 2 4831D 00-1 1467D 01 5 2835D-01-1 5964D-01 6 1386D-01
 1 0713D 01 5.1689D-01 6 7760D-03 1 9855D 00-1 7847D 01 5 2283D-01 1 1115D-01
 4 6571D-01 3 7505D 01 5.4290D-01 3 4982D-01 4 2567D 00 4 0385D 00 5 6911D-01
 5 8228D-01 4.0290D 00 5 2692D 02 5.8998D-01 9 2381D-01 1 9396D 01 1.2142D 02
 6 2700D-01 1 5608D 00 2 3041D 01 3 0426D 02 6 8700D-01 2 4083D 00 3.2351D 01
-4.3686D 02 7.7500D-01 3 2011D 00 1 8813D 01-3 0047D 02 1 0000D 00
 0.0000D-01 2 0000D 00 1.0028D 00 2 4336D 00 1 0000D 00 2 5245D-01 0 0000D-01
 6.9107D 02 1 0143D 00 6 9450D-01 2 4718D 01-3 6921D 02 1 0357D 00 1 1603D 00
 1 6341D 01-1 1674D 02 1 0645D 00 1.4872D 00 1 3810D 01-1 4059D 02 1 1473D 00
 1.9813D 00 7 1964D 00-1 6511D 02 1.3148D 00 2 0264D 00-6 0173D 00-7 0334D 00
 1.4554D 00 1.5324D 00-6 5716D 00-2.4457D 01 1 5998D 00 1 6564D-01-1 0490D 01
 3 9955D 01 1.5490D 00-8.4997D-01-5.3741D 00 1 6620D 00 1 4573D 00-1 3016D 00
-5 2326D 00 5.4599D 01 1.3084D 00-1 5516D 00 2 8626D-01-3 7039D 01 1 2207D 00
-1 5938D 00-1.7920D 00 8 1851D 01 1 1738D 00-1 6113D 00 5 9479D-01 2.8899D 02
 1.1270D 00-1.4632D 00 9.2704D 00-1 1846D 02 1 0860D 00-1 2350D 00 5 4455D 00
 1 1328D 02 1 0510D 00-1 0057D 00 9 1561D 00-1 4624D 02 1 0000D 00
 1.0000D 00 1.5000D 00 5.0960D 00 4 3765D 00 1 0000D 00 5 0622D-01 0 0000D-01
 2 4828D 02 1 0200D 00 6 6504D-01 8 8804D 00-6 0311D 02 1 0362D 00 7 1129D-01
-4 8030D 00 2.9832D 02 1 0510D 00 6 7727D-01 1 6652D 00-4 6267D 01 1 0839D 00
 7.0441D-01-5.1129D-01-2.1501D 01 1 1368D 00 5 9464D-01-2 2320D 00 3 2866D 00
 1.1770D 00 4.2894D-01-1 9730D 00-5 9810D 00 1 2163D 00 3 6082D-02-2 9312D 00
 6 0249D 00 1 1990D 00-2.8965D-01-2 1598D 00 2 2492D 01 1 1688D 00-2 9222D-01
-2.4440D-01 5.4648D-01 1 1280D 00-4 1413D-01-1 8916D-01-2 9390D 01 1 1036D 00
-4 7101D-01-1 8382D 00 1.0071D 02 1.0895D 00-4 8179D-01 1 0986D 00-3 3966D 02
 1.0740D 00-6.0187D-01-9.0980D 00 5 6050D 02 1 0540D 00-6 1785D-01 8 0533D 00
-3.4674D 02 1.0370D 00-5.3478D-01-2.6920D 00 4 2997D 01 1 0000D 00
 0.0000D-01 2.5000D 00-2.2799D 00 2 2460D-01-1 0000D 00 8 0513D-01 0 0000D-01
-3 2357D 02-9.7367D-01 5 9815D-01-1.1573D 01-1 7063D 02-9 6341D-01 2 9166D-01
-1 5445D 01 1 4284D 03-9.5829D 01 2 9254D-01 1 5526D 01-6 0409D 02-9 3783D-01
 3 5451D-01-1.2892D 01 2.3308D 02-9.3083D-01 6 9231D-02 5 7622D 00-1 0444D 02
-9.1600D-01 1.9900D-01-2 4689D 00 9 5282D 01-8 5050D-01 1 0263D 00 1 2796D 01
-2 4658D 01-6.2283D-01 2.4626D 00 9 6391D 00 2 2912D 02-3 5458D-01 4 1143D 00
 2.9151D 01-8.5809D 01 1 9544D-01 6 6225D 00 2.0477D 01 1 0861D 02 6 0246D-01
 7 9424D 00 2.6572D 01-7 5738D 03 8 1406D-01 5 4972D 00-1 9428D 02 5 2019D 03
 9.1500D-01 2.0089D 00-3.8119D 01 2 8757D 02 9 6000D-01 9 7712D-01-2 9319D 01
 7.6561D 02 9.8000D-01 4.3616D-01-5 5929D 00 8 9229D 01 1 0000D 00
 1.0000D 00 1.5000D 00 5.0960D 00 4 3765D 00 1 0000D 00 5 0622D-01 0 0000D-01
```

```
 2 4828D 02 1 02000 00 6.6504D-01 8 8804D 00-6 0311D 02 1 03620 00 7 11290-01
-4 8030D 00 2.9832D 02 1.0510D 00 6 77270-01 1 6652D 00-4 62670 01 1 08390 00
 7 0441D-01-5 11290-01-2 1501D 01 1 1368D 00 5 94640-01-2 2320D 00 3 28660 00
 1 1770D 00 4 2894D-01-1.9730D 00-5 9810D 00 1 2162D 00 3 6982D-02-2 9312D 00
 6 0249D 00 1 1990D 00-2 8985D-01-2 1598D 00 2 2492D 01 1 1688D 00-3 9222D-01
-2.4440D-01 5.4643D-01 1 1280D 00-4 1413D-01-1 8916D-01-2 9790D 01 1 10360 00
-4 7101D-01-1 8382D 00 1 0071D 02 1 0895D 00-4 8179D-01 1 0486D 00-3 3946D 02
 1.0740D 00-6 0187D-01-9.0980D 00 5 6050D 02 1 0540D 00-6 1785D-01 8 0533D 00
-3.4674D 02 1 0370D 00-5 3478D-01-2 6920D 00 4 2997D 01 1 0000D 00
 1.0000D 00 1 5000D 00 4.7203D 00 3 4007D 00 1 0000D 00 5 9425D-01 0 0006D-01
 1 1453D 02 1.0222D 00 6 6951D-01 4 0965D 00-7 9332D 02 1 0369D 00 5 5827D-01
-1.3902D 01 7.4367D 02 1.0470D 00 4 3164D-01 2 2228D 00-1 3049D 02 1 0675D 00
 3 9179D-01-3.9165D 00 2.9114D 01 1 0888D 00 1 7159D-01-1 5865D 00 7 4008D 00
 1 0980D 00 6 9544D-02-1 0032D 00-6 2259D 00 1 0920D 00-1 7198D-01-2 0007D 00
 1 7163D 01 1 0597D 00-2 8655D-01 1 9695D-01-2 5269D 01 1 0334D 00-3 6177D-01
-1 9635D 00-4 6567D 00 9.8600D-01-5 8403D-01-2 4342D 00 1 2065D 02 9 5295D-01
-5.3072D-01 4.3345D 00 2.0153D 02 9 4015D-01-3 1804D-01 1 8211D 01-2 6295D 02
 9 3400D-01-1.3058D-01 2 3174D 00 4 0015D 02 9 3300D-01 1 2767D-01 1 4562D 01
 1.0265D 01 9.4400D-01 5 8388D-01 1 4980D 01-2 3766D 02 1 0000D 00
 0 0000D-01 1 0000D 00 4 5143D 00 7 0281D 00 1 0000D 00-2 7314D 00 0 0006D-01
 6 6960D 02 9.0741D-01-2.3031D 00 2 3950D 01-4 6342D 02 8 6942D-01-1 8730D 00
 1.3436D 01-1 5225D 02 8 2258D-01-1 6234D 00 1 0135D 01-1 9908D 01 7 5708D-01
-1.1687D 00 9.1987D 00-7 0346D 01 6 8790D-01-6 5777D-01 3 5690D 00-8 1462D 00
 6.4559D-01-4.0180D-01 2.9268D 00-9 8761D 00 6 1200D-01-5 9646D-02 1 3445D 00
-4.3285D 00 6.1387D-01 7.7029D-02 7 9033D-01-9 4781D 00 6 2232D-01 1 0996D-01
-1.6820D-02 4 7353D 01 6.4150D-01 3 5017D-01 4 7696D 00-1 0745D 01 6 6834D-01
 6.0088D-01 4.1667D 00 3 5252D 02 6 8909D-01 8 7224D-01 1 4446D 01-3 9581D 02
 7.2000D-01 1.1276D 00 2.5641D 00-3.5695D 02 7 5400D-01 1 0389D 00-8 3584D 00
 2.3823D 03 7.9460D-01 1.9239D 00 6 5469D 01-1 0457D 03 1 0000D 00
```

```
RETRIEVAL FILE NO   ML3-05-3
        FILE SIZE =    13
        L/D       =     0.5000
        ALFA      =     1.1250
 0 00000D-01  1.27100D-01  2.07210D-01  4 46230D-01  6 26620D-01  7.38950D-01  9 16625D-01
 0 51850D-01  8.87980D-01  9.12450D-01  9 40380D-01  * 42320D-01  1 00000D 00
 1 00000D 00  0.00000D-01  2.61560D-01  1 00000D 00  1 00000D 00-1 37200D 00  0 00000D-01
 3.70000D 01  9.30190D-01-1.07280D 00  4 70770D 00-2.71051D 01  7 44130D-01-6 15050D-01
 1 73540D 00-1.67870D 00  6 14720D-01-4 53920D-01  1 20640D 00  4 51970D 00  5.36900D-01
-1 27170D-01  2 14600D 00  2.60700D 01  5 59020D-01  2 32130D-01  4 99590D 00  5.76260D 01
 7.97200D-01  7 87170D-01  9.37140D 00  1.73890D 02  0 32020D-01  1 22540D 00  1 54900D 01
 0.84920D 01  6.87100D-01  1.84300D 00  1.96960D 01  1 20130D 03  7.40720D-01  2 66010D 00
 4 80910D 01-1 90500D 03  9.26570D-01  3 22900D 00-7 24910D 00-3 64000D 02  9.95000D-01
 2 97970D 00-1.53910D 01  4.00180D 02  1.00000D 00
 0 00000D-01-5.00000D-01  6.33920D 01  7.24970D 01  1 00000D 00-1 12220D 00  0 00000D-01
 5 59020D 01  8.76450D-01-6.70130D-01  7 10950D 00-6 83950D 01  8 39740D-01-3.20170D-01
 1 63540D 00-2.69770D 00  8.03790D-01-6.35400D-03  9 90570D-01-1 51130D 00  8.18770D-01
 1 54650D-01  7 02930D-01  9.17000D 00  8.39950D-01  2.74780D-01  1 64120D 00  2 63130D 01
 8 68300D-01  4.81620D-01  3.68490D 00  3.06710D 01  6 07780D-01  6 30510D-01  4.76570D 00
 7 76350D 00  9 13730D-01  8.07740D-01  5 04620D 00  1 26020D 02  9 25320D-01  9 69830D-01
 0 20300D 00-0.39070D 02  9.62560D-01  8 71030D-01-1 52210D 01  4 13910D 02  9 70770D-01
 6.38950D-01-6.00740D 00  1.59420D 02  1.00000D 00
 0 00000D-01  5.00000D-01  2.97310D 01  1.18380D 01  1 00000D 00  1 34270D 00  0.00000D-01
-2 47530D 01  1.16230D 00  1.14260D 00-3.14600D 00  2 20730D 01  1 24560D 00  9 63850D-01
-1.31730D 00  6.02600D-01  1.43970D 00  6 66370D-01-1 17190D 00-7 52640D 00  1 53670D 00
 7 06850D-01-2 60480D 00-2.77100D 01  1.54930D 00-1.34601D-01-5 44040D 00-6.89550D 01
 1 51960D 00-7.35330D-01-1.07960D 01-1.09620D 02  1 48620D 00-1 10300D 00-1 46500D 01
-1.90600D 02  1.43230D 00-1.93780D 00-2.15440D 01-2.68120D 02  1 38020D 00-2.44520D 00
-2.81040D 01-6.42580D 02  1.29870D 00-3.48070D 00-4 60520D 01-9 51790D 02  1.20950D 00
-4.72020D 00-6.69350D 01  1.77630D 03  1.00000D 00
 0.00000D-01  0.00000D-01  2.90200D 00  2 51070D 00  1 00000D 00  1 45140D-01  0.00000D-01
-2.96070D 00  1.01740D 00  1.21200D-01-3 76540D-01  2 02700D 00  1.02620D 00  1 00750D-01
-1 34270D-01  2 21780D-01  1.04690D 00  7 49980D-02-8 12590D-02-4 85690D-01  1.05920D 00
 5.07240D-02-1.73730D-01  2 22970D 00  1 06390D 00  4 46210D-02  5 44410D-02-3.62410D 01
 1.06470D 00-6.04580D-02-2.76030D 00  1 79190D 01  1 06100D 00-1 46600D-01-2 12890D 00
 3 16910D 01  1 05450D 00-2.02630D-01-9 94030D-01-9 44940D 01  1 04900D 00-2.55290D-01
-3.29590D 00-1 90670D 02  1.03990D 00-4.21610D-01-8 42120D 00-7.11960D 01  1 02050D 00
-4 27900D-01-1 01830D 01  2.70240D 02  1 00000D 00
 0 00000D-01  0 00000D-01  2.85630D-01  7.63140D-01  1 00000D 00-1 43750D 00  0 00000D-01
 0 89670D 01  7 84100D-01-1 21600D 00  1.13150D 01-1 10990D 02  7 13270D-01-6 67890D-01
 2 43150D 00-2 14020D 00  6 17640D-01-1 56410D-01  1 94800D 00  4 72240D 00  6.26790D-01
 2 01090D-01  2.74750D 00  1 21390D 01  6.72110D-01  5 25800D-01  3 99970D 00  7 41700D 00
 7 23010D-01  9 45970D-01  4 25500D 00-2 57400D 00  7.56020D-01  1 09000D 00  3 91760D 00
 4 65710D 01  8 11140D-01  1 25540D 00  5 23870D 00  2 27730D 01  9 47480D-01  1 34040D 00
 5 74590D 00  2 02270D 02  5 65310D-01  1 62110D 00  1 .4440D 01-0 93720D 00  9 23920D-01
 1 00000D 00  1 12400D 01-2.98500D 02  1 00000D 00
 0 00000D-01  1 50000D 00  3 46640D 00  4.62770D 00  1 00000D 00-1 43010D 00  0 00010D-01
-2 68230D 00  8.16260D-01-1.42990D 00-4 60310D-01  9 03900D 01  7 02830D-01-1 33500D 00
 3 56540D 00-4 90290D 00  4 74210D-01-6 27800D-01  2 13320D 00  1 12670D 01  4.12540D-01
 1 27020D-02  4 47170D 00  4 25660D-01  6 41310D-01  5 20040D-01  4 71520D 00  1.49040D 00
 4 97540D-01  0 99750D-01  4.03100D 00  6 69370D 01  5 31980D-01  1.12400D 00  7.89450D 00
 9 43220D 02  5 82900D-01  1 76370D 00  2.75210D 01-1 27640D 03  2 99710D-01  1 07530D 00
-1.03920D 01  3.97140D 03  6.89330D-01  2 91060D 00  9.25260D 01-2 54000D 02  7.75010D-01
 4 07900D 00  8.69070D 01-2.30670D 02  1 00000D 00
```

```
 0.0000D-01 1.5000D 00 1 4580D 01 3 4568D 00 1 0000D 00-3 9880D-01 0 0000D-01
 4 2728D-02 9 4930D-01-3.9845D-01 5 4341D-03 1 4539D 00 9 1755D-0.-3 933.0-01
 1 2180D-01 7 5299D 00 8.4414D-01-1 4917D-01 1 9215D 00 1 6077D 01 8 6906D-01
 5 0804D-01 4.9823D 00 2 0321D 01 9 5977D-01 1 1243D 00 7 0618D 00-4 6951D 01
 1 0557D 00 1.5312D 00 3.4153D 00-7 6041D 02 1 1063D 00 1 1794D 00-2 3380D 01
 1.2432D 03 1.1434D 00 1 1460D 00 2 1531D 01-6 0770D 03 1.1630D 00-1 4633D-01
-1 2716D 02 5 3492D 03 1.1288D 00-1 6116D 00 2 2235D 01-3 1547D 03 1 0932D 00
-1 8631D 00-4.6982D 01 1.2468D 03 1.0000D 00
 0 0000D-01 1 5000D 00 6 8589D 00 3 0174D 00 1 0000D 00-6 6358D-02 0 0000D-01
-8.0362D 00 9.8881D-01-1.3135D-01-1 0220D 00 1 4991D 01 9 7630D-01-1 6513D-01
 1 7780D-01 3.6394D 00 9 5019D-01-1 8682D-02 1 0477D 00 1 1196D 01 9.7850D-01
 3 8369D-01 3.1792D 00-4.6869D 01 1 0260D 00 4 6362D-01-1 6171D 00 7.4652D 01
 1 0630D 00 5 6318D-01 4.1809D 00-1 7612D 02 1 0842D 00 6 0116D-01-2 0254D 00
-7 6214D 02 1 0986D 00 3 0689D-02-2 9556D 01 5 7527D 02 1 0919D 00-5 2033D-01
-1 5482D 01 3.9585D 02 1 0727D 00-7 9853D-01-4 4258D 00-8 6354D 02 1 0526D 00
-1 1033D 00-2.3372D 01 6.2026D 02 1.0000D 00
 5 0000D-01 1 0000D 00 5 0850D 00 9 8526D 00 1.0000D 00-1 0175D 00 0 0000D-01
-3 2583D 01 8 5942D-01-1.2810D 00-4 1438D 00 1 3685D 02 7 5531D-01-1 1744D 00
 6.8093D 00-1.3815D 01 6.3768D-01 5 8532D-02 3 5074D 00-2 9079D 01 6 7894D-01
 1.9927D-01-2.0290D 00 5.2607D 01 6 9811D-01 2 6709D-01 3 3544D 00-2.1064D 01
 7.2732D-01 4.6408D-01 1.7185D 00-1 5518D 02 7 4361D-01 4 2829D-01-3 7500D 00
 4.2780D 02 7.6000D-01 5.7197D-01 1 1704D 01-7 0737D 02 7 7577D-01 6.4660D-01
-5.6039D 00 2.9275D 03 8.0227D-01 1.6319D 00 7 6159D 01-7 9726D 02 8 5501D-01
 3 1109D 00 5.8666D 01-1.5569D 03 1.0000D 00
 0 0000D-01 2 0000D 00-6 8872D 00 2 2470D-01-1 0000D 00 7 8924D-02 0 0000D-01
 4.3323D 00-9.8848D-01 1.1396D-01 5 5097D-01 1 1753D 01-9 7659D-01 1 9570D-01
 1.4916D 00-7 1466D 00-9.0347D-01 3 4808D-01-2 1651D-01 3 1519D 01-8 0487D-01
 8.7811D-01 5.7843D 00 1.3317D 02-6.6094D-01 2 1673D 00 1 9412D 01 2 9348D 02
-4 1115D-01 4.5601D 00 4.2205D 01 1 5317D 03-2 1308D-01 6 9983D 00 9.6179D 01
-2 0337D 02 1.0089D-01 1.0340D 01 8.8832D 01-4 6286D 03 3 6919D-01 1 1128D 01
-2.4421D 01 5 6886D 02 6 7253D-01 1 0668D 01-8.5333D 00-1 3925D 04 8 8002D-01
 7 1289D 00-3.1407D 02 8.3347D 03 1 0000D 00
 0 0000D-01 1.0000D 00-1.3682D 00 8 2632D 00-1 0000D 00 6 9057D 00 0 0000D-01
-4 1638D 02-2.6518D+01 3.5223D 00-5 3208D 01 6 2946D 02-9 9916D-02 1.2791D 00
-2 8437D 00 6.8432D 00 1.4015D-01 7 9490D-01-1.2081D 00 3 0886D 01 3 0512D-01
 1 1247D 00 4.6722D 00-7.6691D 01 4 3097D-01 1 2012D 00-3 1758D 00 1 8445D 01
 5 1613D-01 1.0102D 00-1.7433D 00 6 0376D 02 5 5505D-01 1 3236D 00 1.9532D 01
-1 0445D 03 6.0740D-01 1.3477D 00-1.8201D 01 1 1347D 03 6 3779D-01 1 2420D 00
 9 5634D 00 3.0065D 03 6.8704D-01 2.6817D 00 9.3532D 01 4 2228D 02 7 6913D-01
 4 8355D 00 1.0280D 02-2.7280D 03 1.0000D 00
 0 0000D-01 1.0000D 00 3.4613D 00 1 1466D 01 1 0000D 00-3 0234D 00 0.0000D-01
 1 5621D 02 6.6905D-01-1.7601D 00 1 9867D 01-2.1162D 02 5 7372D-01-8 4783D-01
 2.9290D 00-1.3419D 00 4.5169D-01-1 8609D-01 2 6083D 00-7 2935D 00 4.5515D-01
 1 7832D-01 1 2197D 00 1.9551D 01 4 8327D-01 4 0550D-01 3 2204D 00-6 4221D 01
 5.1946D-01 4 6193D-01-1 7675D 00 4 8484D 02 5 3818D-01 7 0067D-01 1.5318D 01
 3 4015D 02 5.7616D-01 1.4760D 00 2 7606D 01-2.7895D 03 6 1373D-01 1 3164D 00
-4 0648D 01 6.0169D 03 6 5649D-01 2 5278D 00 1 2740D 02-1 6485D 02 7 4232D-01
 5 2634D 00 1.2378D 02-3.2849D 03 1 0000D 00
 0.0000D-01 1.0000D 00 1 4701D 01 7 0000D 00 1 0000D 00-3 6385D-01 0 0000D-01
 4 9874D 00 9 5544D-01-3.2352D-01 6 3429D-01-1 7759D 01 9 3006D-01-3 2964D-01
-7 8713D-01 1 2372D 01 8 5694D-01-1 6439D-01 2 1699D 00-1 6830D 01 8 4561D-01
-5 6295D-02-1.0343D 00 3.3798D 01 8.4047D-01 1.4827D-02 2.4243D 00-2 2714D 01
 8 4716D-01 1.3461D-01 6 6024D-01-2 2901D 02 8 5064D-01 1 5689D-02-7 4099D 00
 9 6991D 02 8.5321D-01 3 1563D-01 2 4016D 01-3 2478D 02 8 6733D-01 8 0603D-01
  . 8069D 01-1 4029D 02 8 9560D-01 1 2001D 00 1 2151D 01 6 6580D 02 9 2603D-01
 1.0270D 00 2 6759D 01-7 1012D 02 1.0000D 00
```

```
 RETRIEVAL FILE NO  TP4-02-1
       FILE SIZE =   15
       L/D       =    0.2500
       ALFA      =    1.1250
 0.0000D-01 3.7626D-02 8.0970D-02 2 1414D-01 3 4015D-01 5 0969D-01 6 0399D-01
 7.2553D-01 8.0399D-01 8 8662D-01 9 0272D-01 9 4324D-01 9 7124D-01 9 8396D-01
 1.0000D 00
 1 5000D 00 0.0000D-01 3.5558D 00 1 3522D 00 1 0000D 00-1 9399D 00 0 0000D-01
-3.7762D 01 9.2442D-01-2 0266D 00-1 4208D 00-3 5063D 02 8 3048D-01-2 4177D 00
-1.6627D 01 3.0152D 02 4.7977D-01-1 9584D 00 2 3525D 01-1 6512D 02 3.6470D-01
-3.0492D-01 2.7175D 00 4.0822D 00 3 5537D-01 2 1449D-01 3 4096D 00-1 2234D 01
 3.8905D-01 4.8162D-01 2.2560D 00 1 0510D 01 4 6739D-01 8 3342D-01 3.5333D 00
 1.1577D 01 5.4459D-01 1.1463D 00 4 4416D 00 7 4521D 01 6 6148D-01 1 7677D 00
 1 0599D 01 9 2909D 00 6 9132D-01 1 9396D 00 1 0749D 01 2 3776D 02 7 8135D-01
 2 5702D 00 2.0381D 01 1 5114D 03 8 6687D-01 3 7337D 00 6 2710D 01 9 2689D 02
 9.1973D-01 4.6061D 00 7.4497D 01-4.6446D 03 1 0000D 00
 0.0000D-01 0.0000D-01 0 0000D-01 0 0000D-01 1 0000D 00 0 0000D-01 0.0000D-01
 0.0000D-01 1.0000D 00 0 0000D-01 0 0000D-01 0 0000D-01 1 0000D 00 0.0000D-01
 0.0000D-01 0.0000D-01 1.0000D 00 0 0000D-01 0 0000D-01 0 0000D-01 1 0000D 00
 0 0000D-01 0.0000D-01 0 0000D-01 1 0000D 00 0 0000D-01 0 0000D-01 0 0000D-01
 1.0000D 00 0.0000D-01 0 0000D-01 0 0000D-01 1 0000D 00 0 0000D-01 0.0000D-01
 0.0000D-01 1.0000D 00 0.0000D-01 0 0000D-01 0 0000D-01 1 0000D 00 0 0000D-01
 0.0000D-01 0 0000D-01 1.0000D 00 0 0000D-01 0 0000D-01 0 0000D-01 1 0000D 00
 0.0000D-01 0.0000D-01 0 0000D-01 1 0000D 00 0 0000D-01 0 0000D-01 0 0000D-01
 1 0000D 00 0.0000D-01 0 0000D-01 0 0000D-01 1 0000D 00
 0.0000D-01 5.0000D-01 1.7504D 01 1.2518D 01 1 0000D 00 1 4205D 00 0 0000D-01
-1.3804D 02 1.0522D 00 1 3228D 00-5 1940D 00 1 6325D 02 1 1069D 00 1 2510D 00
 1.8820D 00-3 3557D 01 1 2770D 00 1 2041D 00-2 5867D 00 2 2335D 00 1 4089D 00
 8.9590D-01-2 3052D 00-3 4137D 00 1 5249D 00 4 5600D-01-2 8840D 00-1 0791D 01
 1.5536D 00 1.3606D-01-3.9015D 00-8.9369D 00 1 5386D 00-4 0411D-01-4 9877D 00
-6.0555D 01 1 4867D 00-9 8187D-01-9 7390D 00 2 6225D 01 1 3748D 00-1 6971D 00
-7.5720D 00-1.1470D 03 1.3457D 00-1 9677D 00-2 6041D 01 1 6815D 02 1 2464D 00
-2 8847D 00-1.9229D 01-2 0318D 03 1.1507D 00-4 2201D 00-7 6135D 01-4 0629D 02
 1.0907D 00-5.2211D 00-8 1299D 01 5 0687D 03 1 0000D 00
 0 0000D-01 0.0000D-01 6 4709D 00 4 1597D 00 1 0000D 00 5 9606D-01 0 0000D-01
-8.9709D 01 1.0216D 00 5 3256D-01-3 3754D 00-3 3597D 01 1 0411D 00 3 5470D-01
-4.8316D 00 4.2300D 01 1.0621D 00 8 6350D-02 8 0134D-01-7 0277D 00 1 0770D 00
 1 3153D-01-8 4242D-02 1 5078D 00 . 0993D 00 1 3892D-01 1 7139D-01 1 2725D-02
 1.1132D 00 1.5514D-01 1.7259D-01-2 4698D 00 1 1326D 00 1 5787D-01-1 2757D-01
-1.0779D 00 1.1445D 00 1.4455D-01-2 1215D-01-3 9843D 01 1 1520D 00-9 0011D-03
-3.5044D 00-4.7770D 02 1 1510D 00-1 2736D-01-1 1196D 01 5 0018D 02 1 1422D 00
-1.7049D-01 9.0671D 00-5 8555D 03 1 1196D 00-2 2131D 00-1 5493D 02 5 3719D 02
 1.0791D 00-4.1398D 00-1.4810D 02 9 2334D 03 1 0000D 00
 5 0000D-01 0.0000D-01 1.8618D 00 8 9524D-01 1 0000D 00-1 7987D 00 0 0000D-01
 6.7335D 02 9.3830D-01-1 3221D 00 2 5335D 01-4 0581D 02 8 9929D-01-6 0511D-01
 7.7462D 00-5.8799D 01 8.6425D-01-9 4929D-02-8 3836D-02 1 4788D 01 8 5655D-01
 1.1916D-02 1.7796D 00-1.7802D 01 8 6969D-01 5 7779D-02-1 2386D 00 3 4498D 01
 8.7445D-01 9 4366D-02 2.0146D 00-1 7418D 01 8 9559D-01 2 1057D-01-1 0233D-01
 2 0777D 01 9.1347D-01 2.6650D-01 1 5279D 00-4 3806D 01 3 3659D-01 2 4321D-01
-2.0917D 00 1.4940D 03 9.4127D-01 4 0320D-01 2 1964D 01-1 2726D 03 9 6153D-01
 2.4866D-01-2 9594D 01 2.8606D 03 9 6736D-01 5 4174D-01 5 0523D 01-6 0779D 02
 9.7812D-01 1.1351D 00 4.2794D 01-2 6680D 03 1 0000D 00
 1 0000D 00 1.5000D 00 9.0405D-01 1 8884D 00 1 0000D 00 6 3179D 00 0 0000D-01
-8.4696D 02 1 2302D 00 5 7184D 00-3 1868D 01 2 5552D 02 1 4516D 00 4 5771D 00
```

```
-2 0793D 01 4.69067D 00 1 87866D 00 1 84968D 00-2.01680 01 1 0309D 02 1 9859D 00
 1 2685D-01-7.17776D 00 1.9668D 01 1 92036 00-8 07380-01-7 8429D 00 6 9693D 00
 1 8280D 00-1 1388D 00-3.1857D 00 1 9743D 01 1 67206 00-1 3801D 00-7.8629D-01
-1 3929D 02 1.5501D 00-1.8706D 00-1.1715D 01 2 90770 02 1 3829D 00-1 8460D 00
 1 2311D 01-3 4296D 03 1 3523D 00-2 0924D 00-4 2913D 01 7 9465D 02 1 2412D 00
-3 1788D 00-1 0720D 01-1 7691D 03 1 1414D 00-4 1728D 00-6 0266D 01 3 2127D 02
 1 0836D 00-4 9132D 00-5 6181D 01 3 5027D 03 1 0000D 00
 0 0000D-01 1 5000D 00 1.0908D 00 8 0857D-01 1 0000D 00 9 9707D-01 0 0000D-01
-6 7377D 01 1 0369D 00 9 4038D-01-2 5351( 00 1 0756D 02 1 0771D 00 9.4054D-01
 2.1270D 00-2 1367D 01 1 2128D 00 1 0343D 00-7 1842D-01 2 8444D 01 1 3470D 00
 1 1696D 00 2 8659D 00-5 8624D 01 1 5388D 00 8 1295D-01-7 0734D 00 2 5016D 01
 1 5875D 00 2.5716D-01-4.7144D 00-2 6218D 01 1 5761D 00-5 1017D-01-7 9129D 00
-6.2779D 01 1.5067D 00-1 0343D 00-1 2839D 01-2 2409D 02 1 3323D 00-3 1502D 00
-3 1355D 01 4 7229D 03 1 2808D 00-3 0428D 00 4 4695D 01-1 6751D 03 1.1757D 00
-2 6067D 00-2 3168D 01 4 9870D 02 1 0954D 00-3 0600D 00-9 2011D 00-1 4700D 03
 1 0553D 00-3 2959D 00-2 7894D 01 1 7391D 03 1 0000D 00
 0 0000D-01 0.0000D-01 0 0000D-01 0 0000D-01 1 0000D 00 0 0000D-01 0 0000D-01
 0 0000D-01 1 0000D 00 0 0000D-01 0 0000D-01 0 0000D-01 1 0000D 00 0 0000D-01
 0 0000D-01 0.0000D-01 1 0000D 00 0 0000D-01 0 0000D-01 0 0000D-01 1 0000D 00
 0 0000D-01 0.0000D-01 0 0000D-01 1 0000D 00 0 0000D-01 0 0000D-01 0 0000D-01
 1 0000D 00 0.0000D-01 0 0000D-01 0 0000D-01 1 0000D 00 0 0000D-01 0 0000D-01
 0 0000D-01 0.0000D-01 0 0000D-01 0 0000D-01 1 0000D 00 0 0000D-01 0 0000D-01
 0 0000D-01 1.0000D 00 0.0000D-01 0 0000D-01 0 0000D-01 1 0000D 00 0.0000D-01
 0.0000D-01 0.0000D-01 1.0000D 00 0 0000D-01 0 0000D-01 0 0000D-01 1 0000D 00
 0.0000D-01 0.0000D-01 0.0000D-01 1 0000D 00 0 0000D-01 0 0000D-01 0 0000D-01
 1 0000D 00 0 0000D-01 0.0000D-01 0 0000D-01 1 0000D 00
 0.0000D-01 0.0000D-01 0 0000D-01 0 0000D-01 1 0000D 00 0 0000D-01 0 0000D-01
 0 0000D-01 1 0000D 00 0 0000D-01 0 0000D-01 0 0000D-01 1 0000D 00 0 0000D-01
 0 0000D-01 0.0000D-01 1.0000D 00 0 0000D-01 0 0000D-01 0 0000D-01 1 0000D 00
 0 0000D-01 0 0000D-01 0 0000D-01 1 0000D 00 0 0000D-01 0 0000D-01 0 0000D-01
 1 0000D 00 0.0000D-01 0 0000D-01 0 0000D-01 1 0000D 00 0 0000D-01 0 0000D-01
 0 0000D-01 1.0000D 00 0.0000D-01 0.0000D-01 0 0000D-01 1 0000D 00 0 0000D-01
 0.0000D-01 0.0000D-01 1 0000D 00 0 0000D-01 0 0000D-01 0 0000D-01 1 0000D 00
 0 0000D-01 0.0000D-01 0.0000D-01 1 0000D 00 0 0000D-01 0 000UD-01 0 0000D-01
 1.0000D 00 0.0000D-01 0 0000D-01 0 0000D-01 1 0000D 00
 0.0000D-01 0.0000D-01 0.0000D-01 0 0000D-01 1 0000D 00 0 0000D-01 0 0000D-01
 0.0000D-01 1.0000D 00 0 0000D-01 0 0000D-01 0 0000D-01 1 0000D 00 0 0000D-01
 0.0000D-01 0.0000D-01 1 0000D 00 0 0000D-01 0 0000D-01 0 0000D-01 1 0000D 00
 0 0000D-01 0.0000D-01 0.0000D-01 1 0000D 00 0 0000D-01 0 0000D-01 0 0000D-01
 1 0000D 00 0.0000D-01 0.0000D-01 0 0000D-01 1 0000D 00 0 0000D-01 0 0000D-01
 0.0000D-01 1.0000D 00 0.0000D-01 0 0000D-01 0 0000D-01 1 0000D 00 0 0000D-01
 0 0000D-01 0.0000D-01 1.0000D 00 0 0000D-01 0 0000D-01 0 0000D-01 1 0000D 00
 0.0000D-01 0.0000D-01 0.0000D-01 1 0000D 00 0 0000D-01 0 0000D-01 0 0000D-01
 1.0000D 00 0.0000D-01 0.0000D-01 0.0000D-01 1 0000D 00
 1.0000D 00 1.5000D 00 9.0405D-01 1 8884D 00 1 0000D 00 6 3179D 00 0 0000D-01
-8.4696D 02 1.2302D 00 5.7184D 00-3 1868D 01 2.5552D 02 1 4516D 00 4 5771D 00
```

```
-2.0793D 01 4.6907D 00 1.8786D 00 1 8498D 00-2 0[illegible] : 0309D 02 : 9859D 00
 1.2685D-01-7.1776D 00 1.9668D 01 1 9203D 00-8 07      -3 8429D 00 6 9693D 00
 1.8280D 00-1 1388D 00-3.1857D 00 1 9743D 01 1 6[illegible]-1 3801D 00-7 8629D-01
-1.3929D 02 1 5501D 00-1.8706D 00-1 1715D 01 2.9[illegible] 02 1 3829D 00-1 8460D 00
 1.2311D 01-3 4296D 03 1 3523D 00-2 0924D 00-4 [illegible]13D 01 7 9465D 02 1 2412D 00
-3.1788D 00-1.0720D 01-1.7691D 03 1 1414D 00-4   28D 00-6 0266D 01 3 2127D 02
 1 0836D 00-4.9132D 00-5 6181D 01 3 5027D 03 1 0000D 00
 0.0000D-01 1 5000D 00 1 1010D 00 8 2142D-01 1 0000D 00 1 0786D 00 0 0000D-01
-8.29[illegible]0D 01 1 0372D 00 9.5009D-01-3 1214D 00 1 0676D 02 1 0769D 00 9 .5080-01
 1.5058D 00-1 6684D 01 1 2056D 00 9 6768D-01-7 1588D-01 3 1471D 01 1 3323D 00
 1.1273D 00 3 2499D 00-6.1397D 01 1 5203D 00 7.9590D-01-7  596D 00 2 6878D 01
 1 5673D 00 2.4026D-01-4.6250D 00-2 6342D 01 1 5544D 00-5 1639D-01-7 8265D 00
-6 0231D 01 1.4850D 00-1.3159D 00-1 2553D 01-2 2429D 02 1 3123D 00-3 1196D 00
-3.1085D 01 4.8502D 03 1 2614D 00-2 9906D 00 4 7013D 01-1 8966D 03 1 1578D 00
-2.6423D 00-2 9821D 01 1,7314D 03 1 0785D 00-2 7985D 00 1 8671D 01-1.7984D 03
 1.0438D 00-2.7064D 00-4 1977D 00 2.6171D 02 1 0000D 00
```

```
 RETRIEVAL FILE NO  TP4-02-2
       FILE SIZE =   17
       L/D       =    0.2500
       ALFA      =    1.1250
 0.0000D-01 4.3835D-02 8 8832D-02 1.8416D-01 3.9486D-01 4 8752D-01 6 8775D-01
 7.3399D-01 7.7720D-01 8.3390D-01 8.6701D-01 9.0771D-01 9 3995D-01 9.5690D-01
 9.7055D-01 9.8561D-01 1.0000D 00
 1.0000D 00 0.0000D-01 7.3446D-01 1 3409D 00 1 0000D 00-1 7387D 00 0 0000D-01
 1 4589D 02 9.2583D-01-1.5985D 00 6 3952D 00-7.7090D 01 8 5921D-01-1 3888D 00
 2.9265D 00-5.6501D 00 7.3931D-01-1 1355D 00 2 3879D 00 1 0259D 01 5 6906D-01
-4.0459D-01 4.5495D 00-5 5660D 01 5 4372D-01-2.2197D-01-6 0766D-01 2.2702D 01
 5.1747D-01 1.1146D-01 3.9381D 00-5 4096D 00 5 2674D-01 2 8775D-01 3 6880D 00
 5.6287D 01 5.4338D-01 4.9967D-01 6 1203D 00 1 6633D 01 5 8205D-01 8.7342D-01
 7.0634D 00 1.6827D 02 6.1586D-01 1 1995D 00 1 2634D 01 8 2098D 01 6 7606D-01
 1.7817D 00 1.5976D 01 4.5262D 02 7 4436D-01 2.5323D 00 3 0572D 01 7 6319D 02
 7 9229D-01 3.1601D 00 4.3507D 01 3 0871D 03 8.4075D-01 4 0403D 00 8.5623D 01
 1.8614D 03 9.1243D-01 5.5425D 00 1.1367D 02-7 9021D 03 1 0000D 00
 0.0000D-01 0.0000D-01 0 0000D-01 0 0000D-01 1 0000D 00 0 0000D-01 0.0000D-01
 0.0000D-01 1.0000D 00 0.0000D-01 0 0000D-01 0 0000D-01 1 0000D 00 0 0000D-01
 0.0000D-01 0.0000D-01 1.0000D 00 0.0000D-01 0 0000D-01 0 0000D-01 1.0000D 00
 0.0000D-01 0.0000D-01 0.0000D-01 1.0000D 00 0 0000D-01 0 0000D-01 0 0000D-01
 1.0000D 00 0.0000D-01 0.0000D-01 0 0000D-01 1 0000D 00 0 0000D-01 0 0000D-01
 0.0000D-01 1.0000D 00 0.0000D-01 0 0000D-01 0 0000D-01 1 0000D 00 0 0000D-01
 0.0000D-01 0.0000D-01 1.0000D 00 0.0000D-01 0 0000D-01 0 0000D-01 1 0000D 00
 0.0000D-01 0.0000D-01 0.0000D-01 1 0000D 00 0 0000D-01 0 0000D-01 0 0000D-01
 1.0000D 00 0.0000D-01 0.0000D-01 0 0000D-01 1 0000D 00 0 0000D-01 0 0000D-01
 0.00000-01 1 0000D 00 0 0000D-01 0 0000D-01 0 0000D-01 1 0000D 00
 0.0000D-01 5.0000D-01 2.1777D 01 1 2453D 01 1 0000D 00 1 4043D 00 0 0000D-01
-1.3001D 02 1.0597D 00 1.2794D 00-5 6992D 00 8 9939D 01 1 1129D 00 1 1140D 00
-1.6522D 00-4.2990D 00 1.2110D 00 9 3696D-01-2 0620D 00 1 1509D 01 1 3806D 00
 7.5797D-01 3 6301D-01-2 7680D 01 1 4487D 00 6 7278D-01-2 2017D 00-8 6152D 00
 1.5277D 00 5.9228D-02-3.9267D 00-6 6120D 01 1 5252D 00-1 9298D-01-6 9837D 00
 3.3932D 01 1.5108D 00-4 6309D-01-5 5174D 00-1 5287D 02 1 4710D 00-1 0216D 00
-1.4185D 01 1.7553D 02 1.4305D 00-1 3951D 00-8 3735D 00-3 4637D 02 1 3629D 00
-2 0227D 00-2 2471D 01-2 7428D 02 1 2844D 00-2 8900D 00-3 1316D 01-9 0747D 01
 1 2309D 00-3.4338D 00-3 2854D 01-5 8170D 03 1 1785D 00-4 4233D 00-1.1221D 02
-1.0494D 03 1.0985D 00-6 2334D 00-1 2802D 02 8 8998D 03 1 0000D 00
 0 0000D-01 0 0000D-01 6 0145D 00 3 9283D 00 1 0000D 00 5 1432D-01 0 0000D-01
-4 1855D 01 1.0220D 00 4.7411D-01-1 8347D 00 1 0050D 01 1 0416D 00 4 0173D-01
-1.3825D 00 5.6962D 00 1.0744D 00 2 9582D-01-8 3953D-01 1 9968D 00 1 1212D 00
 1.6325D-01-4.1880D-01 6.7358D 00 1 1355D 00 1 5336D-01 2.0531D-01-1.4573D 00
 1.1683D 00 1.6525D-01-8 6488D-02 7 1336D 00 1 1760D 00 1 6888D-01 2 4332D-01
-2.3698D 01 1.1832D 00 1 5727D-01-7 8072D-01 3.0286D 00 1 1909D 00 1 1787D-01
-6.0900D-01-8.9909D 01 1.1940D 00 4 8431D-02-3 5858D 00 1 1617D 01 1 1931D 00
-8 7888D-02-3.1130D 00-5.9723D 02 1 1853D 00-4 9883D-01-2 2373D 01 2 1485D 03
 1.1754D 00-5.6944D-01 1.4042D 01-1.8709D 04 1 1610D 00-2 1189D 00-2.4120D 02
-7 0678D 02 1 1013D 00-5 8338D 00-2 5185D 02 1 7507D 04 1 0000D 00
 0.0000D-01 0.0000D-01 1.5846D 00 9 6795D-01 1 0000D 00 1 5851D-01 0 0000D-01
-1 3226D 02 1.0051D 00 3 1433D-02-5 7978D 00 1 3945D-01 1 0006D 00-2 2930D-01
-5.7915D 00 1.6945D 01 9 5491D-01-7 0438D-01-4 1762D 00 4 3565D 01 7 8171D-01
-6.1723D-01 5 0034D 00 9 8936D 00 7 4731D-01-1 1117D-01 5 9201D 00-3 2180D 01
 8.0067D-01 4.2912D-01-5.2352D-01 2 3697D 01 8 2034D-01 4 3024D-01 5 7206D-01
 4.9621D 01 8 4014D-01 5 0129D-01 2 7163D 00-8 9133D 01 8 7022D-01 5 1203D-01
-2 3374D 00 2 3948D 02 8 8734D-01 5 6590D-01 5 5916D 00-2 2749D 02 9 1245D-01
```

```
 6 05060-01-3.66730 00 1.27160 03 9.37160-01 1 14800 00 3 73390 01-6.38340 03
 9 56800-01 8.64020-01-7.08510 01 8 24950 03 9.65490-01 6 65130-01 4.16920 01
-5 31500 02 9 79940-01 1.23310 00 3 36830 01-2.34150 03 1 00000 00
 0 00000-01 1.50000 00 7.03440-01 1.85500 00 1.00000 00-5 42490-01 0.00000-01
-1 46000 02 9 74170-01-6.92760-01-6.39980 00 2 80610 02 9 41230-01-6.86660-01
 6 22680 00-1.69000 00 9.03820-01-1 00770-01 6 06570 00-2.38850 01 9.80000-01
 6 47090-01 1 03290 00-8.96130-01 1.04430 00 7 38950-01 9 49860-01-2.01340 01
 1 16130 00 5.25530-01-3.00160 00-8.07370 01 1 20400 00 2.96770-01-6.81430 00
 2.12570 02 1 21330 00 2.00780-01 2 37160 00-3.37540 02 1.21830 00-2.07290-01
-1 67060 01 8.39490 02 1.20730 00-3.02830-01 1 09950 01-8.43680 02 1.19460 03
-5 54110-01-2.33430 01 3.19340 02 1 16640 00-1 14080 00-1.30450 01-1.40250 03
 1 14400 00-1.56340 00-3.68160 01-4 66940 03 1 11720 00-2.50020 00-1.00520 02
-1 08430 03 1.06760 00-4 13800 00-1 16860 02 8 12350 03 1 00000 00
 0 00000-01 1 50000 00 1.84730 00 7 92240-01 1.00000 00-3 15680-02 0.00000-01
 5 55270 01 9 99110-01 2.56450-03 1.55730 00 1 66110 01 1 00110 00 8.94540-02
 2 30470 00 2.60710 01 1 02380 00 4.27600-01 4 78990 00-3 54370 01 1.16500 00
 6.50230-01-2.67690 00 6.15780 01 1.22190 00 6 66530-01 3.02870 00-3 39170 01
 1 32070 00 5.93050-01-3.76260 00-1 01320 02 1 33240 00 3 10810-01-8 44700 00
-8 24980 01 1.39690 00-1 31240-01-1.20120 01-3 83650 01 1 36900 00-8 73960-01
-1 41970 01-6 96210 02 1.32800 00-1 72530 00-2 72380 01 8 96130 02 1.23710 00
-2 49960 00-7.65300-01 3.36410 02 1 15900 00-2 34840 00 1 00840 01-2.25850 03
 1 11780 00-2.50190 00-2.81950 01 2.45340 03 1 08210 00-2.65820 00 5.27470 00
- 80870 03 1 04160 00-2 78410 00-2 19810 01 1 52600 03 1 00000 00
 0.00000-01 0.00000-01 0.00000-01 0 00000-01 1.00000 00 0 00000-01 0.00000-01
 0 00000-01 1 00000 00 0.00000-01 0 00000-01 0 00000-01 1 00000 00 0.00000-01
 0.00000-01 0.00000-01 1.00000 00 0 00000-01 0 00000-01 0 00000-01 1.00000 00
 0 00000-01 0 00000-01 0 00000-01 1 00000 00 0 00000-01 0 00000-01 0.00000-01
 0 00000-01 0 00000-01 0 00000-01 0 00000-01 1 00000 00 0 00000-01 0.00000-01
 1.00000 00 0.00000-01 0 00000-01 0 00000-01 0 00000-01 1 00000 00 0.00000-01
 0.00000-01 1 00000 00 0 00000-01 0 00000-01 0 00000-01 1 00000 00
 0 00000-01 0 00000-01 0.00000-01 1 00000 00 0 00000-01 0 00000-01 0 00000-01
 0 00000-01 0 00000-01 0 00000-01 0.00000-01 1 00000 00 0 00000-01 0.00000-01
 1.00000 00 0 00000-01 0 00000-01 0 00000-01 1 00000 00
 0 00000-01 0 00000-01 0 00000-01 0 00000-01 1 00000 00 0 00000-01 0 00000-01
 1.00000 00 0 00000-01 0 00000-01 0 00000-01 1 00000 00 0 00000-01 0.00000-01
 0 00000-01 0 00000-01 1 00000 00 0 00000-01 0 00000-01 1.00000 00 0 00000-01
 0 00000-01 0 00000-01 0 00000-01 1 00000 00 0 00000-01 0 00000-01 0.00000-01
 0 00000-01 1 00000 00 0 00000-01 0 00000-01 0 00000-01 1 00000 00 0 00000-01
 0.00000-01 0 00000-01 1.00000 00 0 00000-01 0 00000-01 0 00000-01 1.00000 00
 0 00000-01 0 00000-01 0 00000-01 1 00000 00 0 00000-01 0 00000-01 0.00000-01
 0 00000-01 0 00000-01 0 00000-01 0 00000-01 1 00000 00 0 00000-01 0.00000-01
 1 00000 00 0.00000-01 0 00000-01 0 00000-01 1 00000 00 0 00000-01 0.00000-01
 0 00000-01 1 00000 00 0.00000-01 0 00000-01 0 00000-01 1 00000 00 0 00000-01
 0 00000-01 0 00000-01 1 00000 00 0 00000-01 0 00000-01 0 00000-01 1 00000 00
 0 00000-01 0 00000-01 0 00000-01 1 00000 00 0 00000-01 0 00000-01 0.00000-01
 0 00000-01 0 00000-01 0 00000-01 0 00000-01 1 00000 00 0 00000-01 0.00000-01
 0 00000-01 1 00000 00 0 00000-01 0 00000-01 0 00000-01 1 00000 00 0 00000-01
 0 00000-01 0 00000-01 1 00000 00 0 00000-01 0 00000-01 0 00000-01 1 00000 00
 0 00000-01 0 00000-01 0 00000-01 1 00000 00 0 00000-01 0 00000-01 0.00000-01
 0 00000-01 0 00000-01 0 00000-01 0 00000-01 1 00000 00 0 00000-01 0.00000-01
 0 00000-01 1 00000 00 0 00000-01 0 00000-01 0 00000-01 1 00000 00 0 00000-01
 0 00000-01 0 00000-01 1 00000 00 0 00000-01 0 00000-01 0 00000-01 1.00000 00
 0 00000-01 0 00000-01 0 00000-01 1 00000 00 0 00000-01 0 00000-01 0.00000-01
 0 00000-01 0 00000-01 0 00000-01 0 00000-01 1 00000 00 0 00000-01 0.00000-01
 1 00000 00 0.00000-01 0 00000-01 0 00000-01 1 00000 00 0 00000-01 0.00000-01
 0 00000-01 1 00000 00 0.00000-01 0 00000-01 0 00000-01 1 00000 00 0 00000-01
 0 00000-01 0 00000-01 1 00000 00 0 00000-01 0 00000-01 0 00000-01 1 00000 00
 0 00000-01 0 00000-01 0 00000-01 1 00000 00 0 00000-01 0 00000-01 0.00000-01
 0 00000-01 0 00000-01 0 00000-01 0 00000-01 1 00000 00 0 00000-01 0.00000-01
 0 00000-01 1 00000 00 0 00000-01 0 00000-01 0 00000-01 1 00000 00 0 00000-01
 0 00000-01 0 00000-01 1 00000 00 0 00000-01 0 00000-01 0 00000-01 1.00000 00
 0 00000-01 0 00000-01 0 00000-01 1 00000 00 0 00000-01 0 00000-01 0.00000-01
 0 00000-01 0 00000-01 0 00000-01 0 00000-01 1 00000 00 0 00000-01 0.00000-01
 1 00000 00 0.00000-01 0 00000-01 0 00000-01 1 00000 00 0 00000-01 0.00000-01
 0 00000-01 1 00000 00 0.00000-01 0 00000-01 0 00000-01 1 00000 00 0 00000-01
 0 00000-01 0 00000-01 1 00000 00 0 00000-01 0 00000-01 0 00000-01 1 
```

```
 0 0000D-01  1.0000D 00 0 0000D-01 0 0000D-01 0 0000D-01 1 0000D 00 0 0000D-01
 0 0000D-01  0.0000D-01 1.0000D 00 0.0000D-01 0 0000D-01 0 0000D-01 1 0000D 00
 0 0000D-01  0.0000D-01 0.0000D-01 1.0000D 00 0 0000D-01 0 0000D-01 0 0000D-01
 1.0000D 00  0 0000D-01 0.0000D-01 0 0000D-01 1 0000D 00 0 0000D-01 0 0000D-01
 0.0000D-01  1.0000D 00 0.0000D-01 0.0000D-01 0 0000D-01 1 0000D 00 0 0000D-01
 0.0000D-01  0.0000D-01 1 0000D 00 0 0000D-01 0 0000D-01 0 0000D-01 1 0000D 00
 0 0000D-01  0.0000D-01 0.0000D-01 1 0000D 00 0 0000D-01 0 0000D-01 0 0000D-01
 1 0000D 00  0.0000D-01 0.0000D-01 0 0000D-01 1 0000D 00 0 0000D-01 0 0000D-01
 0 0000D-01  1 0000D 00 0 0000D-01 0 0000D-01 0 0000D-01 1 0000D 00
 0 0000D-01  1.5000D 00 7 0344D-01 1 8550D 00 1 0000D 00-5 4249D-01 0 0000D-01
 1.4600D 02  9.7417D-01-6 9276D-01-6 3998D 00 2.8061D 02 9 4123D-01-6 8666D-01
 6 2268D 00-1.6883D 00 9 0382D-01-1 0077D-01 6 0658D 00-2 3887D 01 9 8000D-01
 6 4709D-01  1.0327D 00-8.9229D-01 1 0443D 00 7 3894D-01 9 5001D-01-2 0135D 01
 1 1843D 00  5 2553D-01-3 0816D 00-8 0735D 01 1 2040D 00 2 9677D-01-6 8143D 00
 2 1257D 02  1.2133D 00 2 0078D-01 2 3716D 00-3 3754D 02 1 2183D 00-2 0729D-01
-1.6766D 01  8.3849D 02 1 2073D 00-3 0283D-01 1 0995D 01-8 4368D 02 1 1946D 00
-5.5411D-01-2.3343D 01 3 1934D 02 1 1664D 00-1 1408D 00-1 3045D 01-1 4026D 03
 1 1440D 00-1.5634D 00-3.6817D 01-4 6691D 03 1 1173D 00-2.5002D 00-1.0051D 02
-1.0853D 03  1.0676D 00-4 1381D 00-1 1687D 02 8 1243D 03 1 0000D 00
 0 0000D-01  1.5000D 00 1.8473D 00 8 1739D-01 1 0000D 00-3 6971D-02 0 0000D-01
 3.4986D 01  9 9887D-01-3 3573D-03 1 5336D 00 5 6637D 00 1 0004D 00 7 1384D-02
 1.7885D 00  4 4480D 01 1 0217D 00 4 4396D-01 6 0285D 00-5 2356D 01 1 1674D 00
 5 5195D-01-5.0034D 00 1.0363D 02 1 2109D 00 5 3321D-01 4 5988D 00-4 5966D 01
 1.3483D 00  5.3255D-01-4 6053D 00-7.5066D 01 1 3668D 00 2 3941D-01-8 0758D 00
-1 0257D 02  1.3682D 00-2 0534D-01-1 2508D 01 1 3454D 01 1 3369D 00-8 9291D-01
-1.1745D 01-1.0398D 03 1.2946D 00-1 8517D 00-4 6172D 01 1 9838D 03 1 2033D 00
-2.0878D 00  3 4570D 01-2 1890D 03 1 1417D 00-2 1113D 00-3 6024D 01 1 1568D 03
 1.1016D 00-2.5557D 00-1 6417D 01 3 2326D 03 1 0666D 00-2 4788D 00 2.7684D 01
-1.4366D 03  1.0316D 00-2.2248D 00 6 0352D 00-4 1954D 02 1 0000D 00
```

```
 RETRIEVAL FILE NO  TP4-02-3
       FILE SIZE =   21
       L/D       =    0.2500
       ALFA      =    1.1250
 0 0000D-01 5.93250-02 1.1872D-01 1.7814D-01 2 3792D-01 2 9773D-01 3 5741D-01
 4.1743D-01 5.3172D-01 6.3756D-01 7 3027D-01 8 1972D-01 8 6396D-01 9 0086D-01
 9 1145D-01 9.2146D-01 9.3098D-01 9 3951D-01 9 4705D-01 9 8542D-01 1 0000D 00
 1.0000D 00 0.0000D-01 5 3731D-01 1 3233D 00 1 9C09D 00-1 5063D 00 ( 0000D-01
 9.1608D 01 9 1383D-01-1.3451D 00 5 4346D 00-4 8E99D 01 8 4182D-01-1 1082D 00
 2.5421D 00-1.4524D 01 7.7995D-01-9.8279D-01 1 6792D 00 4 9273D 00 7 2437D-01
-8.7360D-01 1.9737D 00-4.0910D 00 6 7551D-01-7 6286D-01 1 7290D 00-1 5092D 01
 6.3253D-01-6.8655D-01 8.2841D-01 2 2689D 01 5 9363D-01-5 9597D-01 2 1902D 00
-4.9651D 00 5 3859D-01-3.7808D-01 1.6227D 00 7 2613D 00 5 0909D-01-1.6566D-01
 2.3912D 00 3.0871D 01 5 0811D-01 1 0870D-01 5 2533D 00 1 8958D 01 5 4827D-01
 7.3444D-01 6.9490D 00 1 0147D 02 5 9*0*D-01 1 1412D 00 1 1438D 01 2 3079D 02
 6.4085D-01 1.7203D 00 1.9954D 01-1 5302D 02 6 6015D-01 1 9230D 00 1 8333D 01
 1.6198D 02 6.8035D-01 2.1147D 00 1 9955D 01 1 5015D 03 7 0137D-01 2 3693D 00
 3.4101D 01-6.4876D 02 7 2302D-01 2 6395D 00 2 8501D 01 2 0457D 03 8 1364D-01
 4.2002D 00 8 4840D 01 1.0284D 03 9 0618D-01 5 9324D 00 1 0372D 02-7 1167D 03
 1.0000D 00
 0.0000D-01 0 0000D-01 0.0000D-01 0 0000D-01 1 0000D 00 0 0000D-01 0 0000D-01
 0 0000D-01 1.0000D 00 0.0000D-01 0 0000D-01 0 0000D-01 1 0000D 00 0 0000D-01
 0 0000D-01 0.0000D-01 1.0000D 00 0 0000D-01 0 0000D-01 0 0000D-01 1 0000D 00
 0 0000D-01 0.0000D-01 0.0000D-01 1 0000D 00 0 0000D-01 0 0000D-01 0 0000D-01
 1.0000D 00 0 0000D-01 0 0000D-01 0 0000D-01 1 0000D 00 0 0000D-01 0 0000D-01
 0 0000D-01 1.0000D 00 0 0000D-01 0 0000D-01 0 0000D-01 1 0000D 00 0 0000D-01
 0 0000D-01 0.0000D-01 1 0000D 00 0 0000D-01 0 0000D-01 0 0000D-01 1 0000D 00
 0 0000D-01 0 0000D-01 0 0000D-01 1 0000D 00 0 0000D-01 0 0000D-01 0 0000D-01
 1 0000D 00 0.0000D-01 0 0000D-01 0.0000D-01 1 0000D 00 0 0000D-01 0 0000D-01
 0 0000D-01 1 0000D 00 0 0000D-01 0 0000D-01 0 0000D-01 1 0000D 00 0 0000D-01
 0 0000D-01 0.0000D-01 1 0000D 00 0 0000D-01 0 0000D-01 0 0000D-01 1 0000D 00
 0 0000D-01 0 0000D-01 0 0000D-01 1 0000D 00 0 0000D-01 0 0000D-01 0 0000D-01
 1.0000D 00
 0.0000D-01 5 0000D-01 2 4793D 01 1 2568D 01 1 0000D 00 . 3832D 00 0 0000D-01
-7 8402D 01 1 0793D 00 1 2452D 00-4 6*12D 00 5 2762[ 01 ' 1469D 00 1 0621D 00
-1 5169D 00-2 5865D 00 1 2073D 00 9 6*2*D-01-1 6*0*D 00 6 8379D 00 1 2624D 00
 8 7970D-01-1 2618D 00 2 7050D 00 1 3128D 00 8 0907D-01-1 1000D 00-4 4528D 00
 1 3590D 00 7.3549D-01-1 3656D 00 4 5*69D 00 1 40*8D 00 6 6189D-01-1 3869D 00
-5 4788D 00 1.4680D 00 5.0145D-01-1 7161D 00-1 80.7[ 0[ . 5079D 00 2 1890D-0.
-3.6231D 00 4.7731D 00 1.5132D 00-9 6481D-02-3 1805D 00-8 2099D 0. . 482.D 00
-7.0942D-01-1 0524D 01-1 0675D 02 1 4389D 00-1 2795D 00-1 5247D 01 5 6635D 0[
 1.3818D 00-1 8035D 00-1.3157D 01-1 8532D 03 1 3616D 00-2 0467D 00-2 2781D 01
-6 4605D 02 1 3393D 00-2 4073D 00-3 9249D 01 1 3391[ 03 ' 3[51D 00-2 7[7ED 00
-2 6641D 01 2 0355D 03 1.2909D 00-2 0[18[ 00-* 0[.[D 0[-[ 3E97D 0[ ' 1966D 00
-4 3993D 00-1 0186D 02 6 3629D 00 1 0986D 00-E 2E*5D 0[-1 0.7*D 0E * 2[9ED 03
 1.0000D 00
 0.0000D-01 0 0000D-01 5.6012D 00 3 9617D 00 1 0000D 00 4 3668D-01 0 0000D-01
-1 8732D 01 1 0253D 00 4 0371D-01-1 1113D 00 8 2732D 00 1 047*D 00 3 5230D-01
-6 1990D-01 4 8901D 00 1 0676D 00 3 2410D-01-2 2*35[-0[-* 5[8*D 00 ' 0861D 00
 2.9264D-01-7 2321D-01 5 9449D 00 1 1025D 00 2 8[.[D-0.-3 0*7[D-0.-2 8306D 00
 1.1173D 00 2 3303D-01-5 3655D-01 3 0303D 00 1 1704D [7 . 0629*-0[-3 5*E5D-01
-2 2920D 00 1 1511D 00 1 5079D-01-E 1661D-01 8 2*05D 00 . 1E55D 00 ' 3195D-01
 2.6088D-01-1.1748D 01 1.1771D 00 1 0566D-01-8 2825D-01 4 8320D-01 ' 1833D 00
 3.3508D-02-7 8503D-01-4.3421D 01 1 1833D 00-4 3714D-02-2 7060D 00-8 1981D 01
```

```
 1.17920 00-1.99360-01-5.73090 00 5 36200 01 1 17680 00-2 57040-01-5 16310 00
-2.54710 02 1.17390 00-3.21490-01-7 71310 00-1 63710 03 1 17030 00-4.66810-01
-2.31360 01 6.17420 03 1.16610 00-4.36520-01 3 01560 01-6 64010 03 1 14240 00
-2.12410 00-1.52710 02 1.05950 03 1 07270 00-4.75080 00-1 33250 02 9.14140 03
 1.00000 00
 0.00000-01 0.00000-01 1 83630 00 9 39930-01 1.00000 00 6 90150-01 0 00000-01
-2.79480 01 1.04000 00 6.40970-01-1.65800 00 1 27260 01 1 07560 00 5 64940-01
-9.02120-01-2.58820 00 1.10740 00 5.06770-01-1 05590 00-1 68260 01 1 13530 00
 4.13570-01-2.06180 00-8.98860 00 1 15600 00 2.74170-01-2 59950 00-2 41040 00
 1.16760 00 1.14750-01-2.74330 00 2.60310 00 1 16970 00-4 52050-02-2 58710 00
-2.75080 01 1.14080 00-5.20550-01-5.73100 00 7.13800 01 1 06770 00-7 27310-01
 1 82410 00-2.08820 01 1.00530 00-6.47940-01-1 11850-01 1 22100 01 9 48360-01
-6.09100-01 9.80300-01 5.89050 01 9.23220-01-5.08080-01 3 58670 00 2 71970 02
 9.09190-01-1.90630-01 1.36210 01-1.09970 03 9 07720-01-1 08050-01 1 07600 00
 3.15770 03 9.07270-01 6.99850-02 3 35900 01-4 02500 03 9 08860-01 2 07001-01
-4.33040 00 5.51590 03 9.11080-01 3.75910-01 4 32800 01-5 56660 02 9 35910-01
 1.35670 00 2.79490 01 1.00700 03 9 66670-01 2.05300 00 4 79180 01-3 28770 03
 1.00000 00
 0.00000-01 1.50000 00 1.41380 00 1 86570 00 1 00000 00-2 26030-01 0 00000-01
-3.37810 01 9.79480-01-3.95480-01-2 09410 00 8 96850 01 9 56150-01-3 48060-0
 3 26350 00-3.38510 00 9.41110-01-1 60150-01 3.06240 00-1 56010 01 9 36450-01
-5.10800-03 2.12420 00 9.33070 00 9 40280-01 1 38640-01 2 68230 00-4 72720 0
 9.51650-01 2.14520-01-1 39200-01 4 13640 01 9 63770-01 2 60640-01 2.34730 01
-2.79420 01 1.00620 00 3.65990-01-8 50200-01 2 81600 01 1 04770 00 4.89750-01
 3.18880 00-5.13480 01 1.10000 00 5 64710-01-1 57170 00 1 34140 01 1 14500 01
 4.77790-01-3.71780-01-3 05140 02 1 16220 00 1 62730-01-1 38710 01 6 55470 00
 1.16420 00 9.58410-02 1.02460 01-5 03250 03 1 16480 00-7 77970-02-4 20420 01
-3.20990 03 1.16140 00-6.69560-01-7.51780 01 1 05160 04 1 15320 00-3 11120-01
 2 38990 01-3.92940 03 1.14500 00-8 51210-01-1 00170 01-3 51770 07 1 10990 00
-2.08180 00-7 93550 01-1.91750 02 1 05790 00-3 57210 00-8 29770 01 5 68590 03
 1.00000 00
 0.00000-01 1.50000 00 2.57100 00 6 40900-01 1 00000 00-1 24210-03 0 00000-01
 5 05940 00 1.00010 00 7 62110-03 3 00130-01 4 06020 01 1 00250 00 9 70640-03
 2.71170 00-1.58690 01 1 01250 00 2 30180-01 1 76980 01 2.22530 00 1 02930 00
 3 39900-01 1.90180 00-8.62020-01 1 05320 00 4 52100-01 1 85070 00-1 06230 01
 1 00310 00 5.43600-01 1.21620 00 5 05490 00 1 11610 00 6 25700-01 1 51960 00
-1.35520 00 1.19920 00 7.90540-01 1 36480 00-1 62680 01 1 28730 00 8 43870-01
-3 57050-01 4 66800 01 1.37020 00 1 01140 00 3 97070 00-1 52050 02 1 45770 00
 7.34260-01-1.01670 01-5 35960 02 1 47230 00-2 40010-01-3 39740 01-2 73910 02
 1 43830 00-1.67540 00-4.39220 01-5 02740 03 1 41110 00-2 41270 00-9 21120 01
-1 71960 03 1.38770 00-3.40060 00-1 14710 02 1 98400 01 1 25010 00-1 47300 00
-8 99930 01 4.61250 03 1.30900 00-5 04790 00-3 01670 01 3 25170 03 1 15220 00
-5 20450 00 3.89130 01-2 17030 03 1 07090 00-4 05770 00-1 05590 00 7 53200 01
 1.00000 00
 0 00000-01 0.00000-01 0 00000-01 0 00000-01 1 30100 01 0 00000-01 0 00000-01
 0 00000-01 1.00000 00 0 00000-01 0 00000-01 3 00000-01 1 00000 00 0 00000-01
 0.00000-01 0 00000-01 1 00000 00 0 00000-01 4 00000-01 0 00000-01 1 00000 00
 0.00000-01 0.00000-01 0 00000-01 1 00000 00 0 00000-01 0 00000-01 0 00000-01
 1 00000 00 0 00000-01 0.00000-01 0 00000-01 1 00000 00 0 00000-01 0 00000-01
 0.00000-01 1 00000 00 0 00000-01 0 00000-01 1 00000 00 0 00000-01 0 00000-01
 0.00000-01 0 00000-01 1 00000 00 0 00000-01 0 00000-01 1 00000 00 0 00000-01
 0.00000-01 0.00000-01 0 00000-01 1 00000 00 0 00000-01 0 00000-01 0 00000-01
 1 00000 00 0 00000-01 0.00000-01 0 00000-01 1 00000 00 0 00000-01 0 05300[-01
 0.00000-01 1.00000 00 0.00000-01 0 00000-01 0 00000-01 1 00000 00 0 00000-01
```


Best Available Copy

```
 0 0000D-01  0 0000D-01  1 0000D 00  0 0000D-01  0 0000D-01  0 0000D-01  0 0000D 00
 0 0000D-01  0.0000D-01  0 0000D-01  1 0000D 00  0 0000D-01  0 0000D-01  0 0000D-01
 1.0000D 00
 0.0000D-01  0.0000D-01  0 0000D-01  0 0000D-01  1 0000D 00  0 0000D 00  0 0000D-01
 0 0000D-01  1 0000D 00  0 0000D-01  0 0000D-01  0 0000D-01  0 0000D 00  0 0000D-01
 0 0000D-01  0.0000D-01  1 0000D 00  0 0000D-01  0 0000D-01  0 0000D-01  0 0000D 00
 0.0000D-01  0 0000D-01  0 0000D-01  1 0000D-01  0 0000D-01  0 0000D-01  0 0000D-01
 1 0000D 00  0 0000D-01  0 0000D-01  0 0000D-01  1 0000D 00  0 0000D-01  0 0000D-01
 0 0000D-01  1 0000D 00  0 0000D-01  0 0000D-01  0 0000D-01  1 0000D 00  0 0000D-01
 0 0000D-01  0 0000D-01  1 0000D 00  0 0000D-01  0 0000D-01  0 0000D-01  0 0000D 00
 0 0000D-01  0 0000D-01  0 0000D-01  1 0000D 00  0 0000D-01  0 0000D-01  0 0000D-01
 1 0000D 00  0 0000D-01  0 0000D-01  0 0000D-01  1 0000D 00  0 0000D-01  0 0000D-01
 0 0000D-01  1 0000D 00  0 0000D-01  0 0000D-01  0 0000D-01  1 0000D 00  0 0000D-01
 0 0000D-01  0 0000D-01  1 0000D 00  0 0000D-01  0 0000D-01  0 0000D-01  0 0000D 00
 0 0000D-01  0 0000D-01  0 0000D-01  1 0000D 00  0 0000D-01  0 0000D-01  0 0000D-01
 1.0000D 00
 0 0000D-01  0 0000D-01  0 0000D-01  0 0000D-01  1 0000D 00  0 0000D-01  0 0000D-01
 0 0000D-01  1 0000D 00  0 0000D-01  0 0000D-01  0 0000D-01  1 0000D 00  0 0000D-01
 0 0000D-01  0 0000D-01  1 0000D 00  0 0000D-01  0 0000D-01  0 0000D-01  0 0000D 00
 0 0000D-01  0 0000D-01  0 0000D-01  1 0000D 00  0 0000D-01  0 0000D-01  0 0000D-01
 1 0000D 00  0 0000D-01  0 0000D-01  0 0000D-01  1 0000D 00  0 0000D-01  0 0000D-01
 0 0000D-01  1 0000D 00  0 0000D-01  0 0000D-01  0 0000D-01  1 0000D 00  0 0000D-01
 0 0000D-01  0 0000D-01  1 0000D 00  0 0000D-01  0 0000D-01  0 0000D-01  0 0000D 00
 0 0000D-01  0 0000D-01  0 0000D-01  1 0000D 00  0 0000D-01  0 0000D-01  0 0000D-01
 1.0000D 00
 0.0000D-01  0 0000D-01  0 0000D-01  0 0000D-01  1 0000D 00  0 0000D-01  0 0000D-01
 0 0000D-01  1.0000D 00  0 0000D-01  0 0000D-01  0 0000D-01  1 0000D 00  0 0000D-01
 0.0000D-01  0 0000D-01  1 0000D 00  0 0000D-01  0 0000D-01  0 0000D-01  0 0000D 00
 0 0000D-01  0 0000D-01  0 0000D-01  1 0000D 00  0 0000D-01  0 0000D-01  0 0000D-01
 1 0000D 00  0 0000D-01  0 0000D-01  0 0000D-01  1 0000D 00  0 0000D-01  0 0000D-01
 0 0000D-01  1 0000D 00  0 0000D-01  0 0000D-01  0 0000D-01  1 0000D 00  0 0000D-01
 0.0000D-01  0 0000D-01  1 0000D 00  0 0000D-01  0 0000D-01  0 0000D-01  0 0000D 00
 0 0000D-01  0 0000D-01  0 0000D-01  1 0000D 00  0 0000D-01  0 0000D-01  0 0000D-01
 1.0000D 00
 0 0000D-01  1.3000D 00  1 4138D 00  1 8857D 00  1 0000D 00-3 2603D-01  0 0000D-01
-3 3782D 01  9.7948D-01-3 9546D-01-2 6941D 00  8 8692D 0.  4 5915D-01-3 4807D-01
 3 2638D 00-3 4110D 00  9 4111D-01-1 6017D-01  1 0412D 00-1 5559D 0.  9 3645D-01
-5.0263D-03 2 1288D 00  8.9720D 00  9 4028D-01  1 3835D-0.  2 6855D 00-4 5937D 0.
 9.5165D-01  2.1561D-01-7 5999D-02  3 6391D 01  9 6577D-01  2 7859D-01  2 1081D 00
-1.9895D 01  1.0062D 00  3.8759D-01-1 6573D-31  7 1937D 00  1 0477D 00  4 1034D-01
 5 9567D-01  2 5930D 01  1 0918D 00  5 7700D-01  2 9996D 00-8 0007D 0.  1 1458D 00
 5 2524D-01-4 1569D 00-1 9392D 02  1 1622D 00  1 5157D-01-1 2736D 0.  6 1052D 02
 1 1642D 00  9.7228D-02  9 7906D 00-4 9777D 03  1 1648D 00-7 8154D-02-4 2917D 0.
-3 2259D 03  1 1614D 00-6 6947D-01-7 5212D 01  1 9521D 04  1 1532D 00-9 1115D-01
 2 3906D 01-3.9292D 03  1.1458D 00-8 5118D-01-1 0009D 0.-2 5184D 03  1 1098D 00
-2.0819D 00-7 9366D 01-1.9153D 02  1 0579D 00-3 5722D 00-8 2864D 01  5 6863D 03
```

```
 1.0000D 00
 0 0000D-01  1 5000D 00 2 5710D 00 6 [illegible]
 5 0594D 00  1 0001D 00 7 6211D-03 3 [illegible]
 2 7117D 00-1 5869D 01 1 0125D 00 2 [illegible]
 3 3990D-01  1 9018D 00-8 6202D-01 1 [illegible]
 1.0831D 00 5 4360D-01 1.2162D 00 5 [illegible]
-1.3552D 00  1 1992D 00 7 9054D-01 . [illegible]
-3.5705D-01 4.6680D 01 1.3702D 00 1 [illegible]
 7 3426D-01-1 0167D 01-5 3596D 02 1 [illegible]
 1.4383D 00-1 6754D 00-4 3922D 01-5 [illegible]
-1.7196D 03 1.3877D 00-3 4806D 00-1 [illegible]
-8.9993D 01 4 6125D 03 1 3090D 00-5 [illegible]
-5 2045D 00 3 8813D 01-2 1703D 03 1 [illegible]
 1.0000D 00
```

```
EFFIEVAL FILE NO  TP4-02-4
      FILE SIZE =   20
      L/D       =    0 2500
      ALFA      =    1 1250
 . 39030-01  1 30760-01 2 5323D-01 3 62900-01 4 55660-01 5 36300-01 6 59720-01
 ' 07900-01 7 84530-01 8 41650-01 8 65180-01 8 94660-01 9 03350-01 9 19580-01
 ' 33490-01 9 45450-01 9 65210-01 9 73150-01 9 85420-01 1 00000 00
   30000 00 9 00000-01 2 40210-01 1 70450 00 1 00000 00-1 36000 00 0 00000-01
3 03630 01 8 33460-01-1 10090 00 3 96310 00-2 61040 01 7 20330-01-8 11490-01
7 55090-01 1 23040 01 6 3853D-01-6 55190-01 2 10450 00-2 52570 01 5 83450-01
5 66640-01-2 38300-01 2 47520 01 5 36960-01-5 08020-01 1 74170 00-8 03040-01
4 89280-01-2 99180-01 1 64260 00 2 47540 01 4 77230-01-1 81310-01 2 83520 00
1 46210 01 4 74240-01 1 57010-01 6 25490 00 5 39560 01 4 95270-01 6 12040-01
' 67970 00 3 11760 02 5.1303D-01 9 26130-01 1 70160 01 1 44900 02 5 48350-01
1 40070 00 2 12870 01-8 50490 02 5 62010-01 1 64350 00 1 36960 01 1 78670 03
5 91790-01 2 10450 00 4 26990 01-2 96650 01 6 24960-01 2 69360 00 4 23510 01
4 97290 02 6 60780-01 3 27630 00 5 43680 01 1 90940 03 7 38600-01 4 72360 00
' 21030 01 8 96910 03 7 79750-01 5 73750 00 1 63310 02 5 76590 03 8 64250-01
8 17610 00 2 34080 02-1 60590 04 1 00000 00
9 00000-01 0 00000-01 0 00000-01 0 00000-01 1 00000 00 0 00000-01 0 00000-01
0 00000-01 1 00000 00 0 00000-01 0 00000-01 0 00000-01 1 00000 00 0 00000-01
9 00000-01 0 00000-01 1 00000 00 0 00000-01 0 00000-01 0 00000-01 1 00000 00
0 00000-01 0 00000-01 0 00000-01 1 00000 00 0 00000-01 0 00000-01 0 00000-01
1 00000 00 0 00000-01 0 00000-01 0 00000-01 1 00000 00 0 00000-01 0 00000-01
0 00000-01 1 00000 00 0 00000-01 0 00000-01 0 00000-01 1 00000 00 0 00000-01
0 00000-01 0 00000-01 1 00000 00 0 00000-01 0 00000-01 0 00000-01 1 00000 00
1 00000-01 0 00000-01 0 00000-01 1 00000 00 0 00000-01 0 00000-01 0 00000-01
1 00000-01 0 00000-01 0 00000-01 1 00000 00 0 00000-01 0 00000-01 0 00000-01
9 00000-01 1 00000 00 0 00000-01 0 00000-01 0 00000-01 1 00000 00 0 00000-01
9 00000-01 9 00000-01 1 00000 00 0 00000-01 0 00000-01 1 00000 00 0 00000-01
' 00000-01 0 00000-01 0 00000-01 1 00000 00
9 00000-01 5 00000-01 3 43670 01 1 26660 01 1 00000 00 1 35240 00 0 00000-01
-1 01270 01 1 16920 00 1 17610 00-2 69660 00 1 41640 01 1 29730 00 9 52080-01
-1 61940-01-1 08690 00 1 39570 00 8 40050-01-1 08100 00-3 13030 00 1 46860 00
7 26310-01-1 37140 00-1 56630 00 1 52250 00 6 10620-01-1 49770 00-1 51460 01
1 58170 00 3 10430-01-3 36700 00-3 32810 01 1 59220 00 1 09500-01-4 97040 00
-7 65990 01 1 58320 00-3 78910-01-7 77530 00-1 35360 02 1 54470 00-1 04370 00
-1 55060 01 8.10830 01 1 51600 00-1 38610 00-1 35980 01-3 06790 02 1 46790 00
-1 32020 00-2 26420 01-3 00490 03 1 45010 00-2 23050 00-4 87550 01 2 36550 03
1 40910 00-2.71020 00-1 03560 01-2 02980 03 1 36980 00-3 04720 00-3 84060 01
-6 70400 02 1 33010 00-3 55860 00-4.64830 01-2 13010 03 1 24790 00-4 89320 00
-8 85500 01-5.09080 03 1.20590 00-5 75690 00-1 29000 02-4 12540 03 1 12420 00
-7 65090 00-1 79630 02 1 23240 04 1 00000 00
0 00000-01 0 00000-01 4.65820 00 3 56930 00 1 00000 00 3 37280-01 0 00000-01
-5 16750 00 1 04220 00 2.93100-01-6 75700-01 4 07610 00 1 07430 00 2 40920-01
-1 76490-01 5 44950-01 1 09970 00 2 24840-01-1 16730-01 1 26820 00 1 12030 00
2 19470-01 9.12700-04 2 72660-01 1 13800 00 2 20430-01 2 29010-02 4 88000-01
1.16550 00 2.26970-01 8 31270-02-7 71380-01 1 17650 00 2 30080-01 4 59630-02
-4 91710 00 1.19390 00 2 19460-01-3 23200-01-1 15380 01 1 20560 00 1 82180-01
-9 82180-01-6 14760 01 1 20950 00 1 42040-01-2 42880 00 5 76130 01 1 21280 00
9 54900-02-7 30540-01-5 86340 02 1 21360 00 6 69920-02-5 82590 00 9 85710 01
1 21400 00-1.45930-02-4 22580 00-8 82310 02 1 21300 00-1 57240-01-1 64190 01
-6 50840 02 1 20970 00-4 02310-01-2 42610 01 8 34160 02 1 19810 00-7 18880-01
-7 77490 00-4 53200 04 1 18840 00-2 20880 00-3 67570 02-4 20890 03 1 13270 00
```

```
-7.0371D 00-4.1923D 02 2.8761D 04 1 0000D 00
 0.0000D-01 0.000uD-01 2.1052D 00 1 6888D 00 1 0000D 00 2 8302D-01 0 0000D-01
-4.8542D 00 1.0352D 00 2.4152D-01-6.3473D-01 3 3200D 00 1 0610D 00 1 8869D-01
-2.2813D-01 7.7961D-01 1.0805D 00 1 6836D-01-1 4263D-01-6 4958D-01 1.0953D 00
 1.5233D-01-2.0208D-01 8.4495D-02 1 1071D 00 1 3624D-01-1 9607D-01-2 3157D 00
 1.1217D 00 9.4410D-02-4 8187D-01-3 0654D 01 1 1251D 00 3 5016D-02-1 9587D 00
 4.7207D 01 1.1256D 00 2.4133D-02 1 6591D 00-3 1215D 02 1 1200D 00-3 9025D-01
-1.6169D 01 1.6853D 03 1.1100D 00-3 0413D-01 2 3489D 01-3 0.22D 03 1 0994D 00
-9.2042D-01-6.5303D 01 1 9045D 04 1 0900D 00-7 6878D-01 1 0020D 02-1 0421D 04
 1.0833D 00-5.1523D-01-6 8964D 01 5 9248D 03 1 0722D 00-9 0253D-01 1 2412D 01
-1.3798D 03 1.0619D 00-8.4711D-01-3 7131D 00-1 4342D 03 1 0425D 00-1 2006D 00
-3.2058D 01 5.4011D 03 1 0325D 00-1 2849D 00 1 0821D 01-6 4599D 02 1 0173D 00
-1 2007D 00 2.8924D 00-1 9844D 02 1 0000D 00
 0 0000D-01 1 5000D 00 5.8291D 00 1 880.D 00 1 0000D 00-1 2765D-01 0 0000D-01
-3.8359D 00 9.8188D-01-1 6045D-01-5 0158D-01 6 9096D 00 9 6055D-01-1 7091D-01
 3.3239D-01 5 8102D 00 9.4510D-01-9 9413D-02 9 6960D-01-6 8907D 00 9 3913D-01
-3.9119D-02 3.3043D-01 1.7946D 01 9 3862D-01 4 5885D-02 1 7777D 00 3 6114D 00
 9.5895D-01 2.9278D-01 2 2234D 00-2 4253D 01 9 7518D-01 3 7176D-01 1 0549D 00
 6.4556D 01 1.0116D 00 6.4217D-01 6 0022D 00-2 4286D 02 1 0505D 00 5 8897D-01
-7 8687D 00 1.4637D 03 1.0654D 00 8 0898D-01 2 6576D 01-2 9314D 03 1 0882D 00
 3.1011D-01-6 0423D 01 1.2756D 04 1 0900D 00 2 6665D-01 5 0420D 01-5 5728D 03
 1.0970D 00 3.5087D-01-4.0044D 01 2 6512D 03 1 0992D 00 5 0639D-02-3 4669D 00
 1.5348D 03 1 1000D 00 1.2100D-01 1 5086D 01-4 2791D 03 1 0934D 00-1 3970D 00
-1.6830D 02 1 8700D 04 1 0754D 00-2 1398D 00-1 9843D 01-6 4587D 03 1 0-69D 00
-2 8698D 00- .9114D 01 6 7998D 03 1 0000D 00
 0.0000D-01 1 5000D 00 5.9234D 00 5 567 D-01 1 0000D 00-2 7370D-02 0 ----0D-0-
 8.2185D-01 9.9677D-01-2 9044D-02 1 07-6D-01 1 3659D 00 9 4312D-0. 7 0-510-0-
 3.4799D-01 4 4987D 00 9 9976D 01 7 3064D-02 8 4136D-01-1 0846D 00 1 0079D 00
 1.4644D-01 7.4081D-01 1 5486D 01 1 4259D 00 2 9054D-01 1 2497D 00 1 7775D 01
 1 0779D 00 6.3747D-01 4 1834D 00-5 3425D 01 1 1142D 00 7 7677D-01 1 5930D 00
 1 0892D 02 1 1948D 00 1 2178D 00 9 9337D 00-1 4145D 01 1 2064D 00 1 5703D 00
 2 4131D 00-2 2007D 02 1 3036D 00 1 5662D 00-1 7465D 01 1 7 1 D 0 1 3459D 00
 1 1498D 00-2 5486D 01-1 0572D 04 1 0511D 00 5 2911D-01-1 1734D 02 5 5457D 07
 1 3522D 00-2.7643D-01 1 8115D 01-1 1704D 04 1 3459D 01-1 1417D 00-1 4357D 01
 1.5989D 04 1.3254D 00-1 7126D 00 4 7085D 01-1 2.09D 04 1 2726D 00-5 0751D 01
-3 8984D 02 4 6326D 04 1 2238D 00-6 7148D 00-2 2636D 01-1 5959D 04 1 2345D 00
-8.1898D 00-2 1830D 02 1 4976D 04 1 0000D 00
 0 0000D-01 0 0000D-01 0 0000D-01 1 0306D-01 1 9646D 01 0 4961D-01 1 0404D-01
 0 0000D-01 1 0000D 00 0 0000D-01 0 0000D-01 1 0636D 00 0 0000D-01 0 0000D-01
 0 0000D-01 0 0000D-01 1 0000D 00 0 0000D-01 0 0000D-01 1 0000D-01 0 0000D-01
 0 0000D-01 0.0000D-01 0 0000D-01 1 0000D 00 0 0000D-01 1 0000D-01 0 0000D-01
 1 0000D 00 0 0000D-01 0 0000D-01 0 0000D-01 1 0000D 00 0 0000D-01 0 0000D-01
 0 0000D-01 1 0000D 00 0 0000D-01 0 0000D-01 1 0000D-01 0 0000D-01 0 0000D-01
 0 0000D-01 0 0000D-01 1 0000D 00 0 0000D-01 1 0000D-01 0 0000D-01 0 0000D-01
 0 0000D-01 0 0000D-01 0 0000D-01 1 0000D-01 1 0000D-01 0 0000D-01 0 0000D-01
 1 0000D 00 0 0000D-01 0 0000D-01 0 0000D-01 1 0000D-01 0 0000D-01 0 0000D-01
 0 0000D-01 1 0000D 00 0 0000D-01 0 0000D-01 1 0000D-01 0 0000D-01 0 0000D-01
 0 0000D-01 0 0000D-01 1 0000D 00 0 0000D-01 1 0000D-01 0 0000D-01 0 0000D-01
 0 0000D-01 0 0000D-01 0 0000D-01 1 0000D-01 1 0000D-01 0 0000D-01 0 0000D-01
 0 0000D-01 1 0000D 00 0 0000D-01 0 0000D-01 1 0000D-01 0 0000D-01 0 0000D-01
 0 0000D-01 0 0000D-01 0 0000D-01 1 0000D-01 1 0000D-01 0 0000D-01 0 0000D-01
 1 0000D 00 0 0000D-01 0 0000D-01 0 0000D-01 1 0000D-01 0 0000D-01 0 0000D-01
```

```
 0 00000-01  1 00000 00  0 00000-01  0 00000-01  0 00000-01  : 00000 00  0 00000-01
 0 00000-01  0 00000-01  1 00000 00  0 00000-01  0 00000-01  : 00000 00  0 00000-01
 0 00000-01  0 00000-01  0 00000-01  1 00000 00  0 00000-01  0 00000-01  0.00000-01
 1 00000 00  0.00000-01  0 00000-01  0 00000-01  . 00000 00  0 00000-01  0 00000-01
 0 00000-01  1 00000 00  0.00000-01  0 00000-01  0 00000-01  : 00000 00  0 00000-01
 0 00000-01  0.00000-01  1 00000 00  0 00000-01  0 00000-01  0 00000-01  : 00000 00
 0 00000-01  0 00000-01  0 00000-01  1 00000 00
 0 00000-01  0 00000-01  0 00000-01  0 00000-01  1 00000 00  0 00000-01  0 00000-01
 0 00000-01  1 00000 00  0 00000-01  0 00000-01  0 00000-01  : 00000 00  0 00000-01
 0 00000-01  0 00000-01  1 00000 00  0 00000-01  0 00000-01  0 00000-01  . 00000 00
 0 00000-01  0 00000-01  0 00000-01  1 00000 00  0 00000-01  0 00000-01  0 00000-01
 1 00000 00  0 00000-01  0 00000-01  0 00000-01  1 00000 00  0 00000-01  0 00000-01
 0 00000-01  1 00000 00  0 00000-01  0 00000-01  0 00000-01  : 00000 00  0 00000-01
 0 00000-01  0 00000-01  1 00000 00  0 00000-01  0 00000-01  0 00000-01  : 00000 00
 0 00000-01  0 00000-01  0 00000-01  1 00000 00  0 00000-01  0 00000-01  0 00000-01
 1 00000 00  0 00000-01  0 00000-01  0 00000-01  1 00000 00  0 00000-01  0 00000-01
 0 00000-01  1 00000 00  0.00000-01  0 00000-01  0 00000-01  : 00000 00  0 00000-01
 0 00000-01  0.00000-01  1 00000 00  0 00000-01  0 00000-01  0 00000-01  : 00000 00
 0 00000-01  0 00000-01  0 00000-01  1 00000 00
 0 00000-01  0 00000-01  0 00000-01  0 00000-01  1 00000 00  0 00000-01  0 00000-01
 0 00000-01  1 00000 00  0 00000-01  0 00000-01  0 00000-01  : 00000 00  0 00000-01
 0 00000-01  0 00000-01  1 00000 00  0 00000-01  0 00000-01  0 00000-01  : 00000 00
 0 00000-01  0 00000-01  0 00000-01  1 00000 00  0 00000-01  0 00000-01  0 00000-01
 1 00000 00
```

```
RETRIEVAL FILE NO  TP4-05-1
      FILE SIZE =   26
      L/D       =    0 5000
      ALFA      =    1 1250
 0 .0000D-01  1 .5310D-01  1 .5979D-01  2 .9506D-01  2 .9710D-01  2 .9847D-01  3 .6105D-01
 4 .1274D-01  5 .2240D-01  5 .7553D-01  6 .2763D-01  7 .2770D-01  7 .3579D-01  8 .4046D-01
 8 .5065D-01  8.7924D-01  9 .0335D-01  9 .1457D-01  9 .2601D-01  9 .3409D-01  9 .4197D-01
 9 .5659D-01  9 .6858D-01  9 .8224D-01  9 .9147D-01  1 .0000D 00
 1 .5000D 00  0 .0000D-01  5 .2559D-01  1 .3696D 00  1 .4950D 00  1 .5000D 00  1 .5000D 00
-3 .5303D 02  1 .1913D 00  5 .1190D-01-3 .7127D 01  7 .1296D 02  1 .1259D 00-1  1 .5000D 00
-2 .0120D 01  6 .6885D 01  1 .0997D 00-1 .9423D 00-1 .8495D 01  7 .8279D 02  1 .3194D-01
-2 .3465D 00  4 .0742D-01  9 .5661D 01  8 .7321D-01-2 .1996D 00  9 .3179D 00  1 .4651D 01
 7 .6648D-01-1 .8303D 00  8 .7193D 00-1 .0794D 00  1 .3164D-01-1  5 .5179D 00  7 .2794D 00
 3 .1948D 01  5 .3985D-01-9 .8737D-01  1 .6432D 00-1  1 .7961D 01  1 .2981D-01  1 .3801D 00
 4 .4987D 00  1 .6513D 01  4 .6038D-01-4 .2043D-01  1 .2979D 00  1 .3000D 00  1 .3001D 00
 1 .0193D-01  6 .0214D 00  1 .4296D 01  1 .5921D-01  1 .7111D-01  1 .8151D 00  1 .8249D 01
 4 .9267D-01  8 .4499D-01  1 .0261D 01-6 .2119D 01  1 .2407D-01  1 .3779D 00  1 .4052D 00
 3 .7154D 02  5 .6143D-01  1 .5267D 00  1 .8323D 01-3 .2029D 00  1 .0279D-01  1 .0879D 00
 1 .1204D 01  1 .3047D 03  6 .2521D-01  2 .0379D 00  2 .5851D 01  1 .9051D 03  1 .9796D-01
 2 .4527D 00  4 .4947D 01-4 .7754D 03  5 .1638D-01  2 .6637D 00  2 .9179D 00  5 .0794D 00
 6 .9413D-01  2 .8736D 00  4 .6124D 01  3 .9401D 02  7 .4124D-01  2 .5491D 00  5 .2631D 00
 1 .0693D 03  7 .8832D-01  4 .2886D 00  1 .4703D 01  1 .9772D 04  8 .5754D-01  1 .1179D 01
 2 .1190D 02  2 .6357D 03  9 .2393D-01  8 .2460D 00  2 .3821D 02-1  7 .8929D 00  1 .0000D 00
 9 .0000D-01  0 .0000D-01  0 .0000D-01  0 .3403D-01  1 .0809D 00  0 .0000D-01  0 .0000D-01
 0 .0000D-01  1.0000D 00  0 .0000D-01  0 .0000D-01  0 .0000D-01  0 .0000D-01  0 .0000D-01
 0 .0000D-01  0 .0000D-01  1 .0000D 00  0 .0000D-01  0 .0000D-01  0 .0000D-01  0 .0000D-01
 0 .0000D-01  0 .0000D-01  0 .0000D-01  1 .0000D 00  0 .0000D-01  0 .0000D-01  0 .0000D-01
 1 .0000D 00  0.0000D-01  0 .0000D-01  0 .0000D-01  0 .0000D-01  0 .0000D-01  0 .0000D-01
 0 .0000D-01  1 .0000D 00  0 .0000D-01  0 .0000D-01  0 .0000D-01  0 .0000D-01  0 .0000D-01
 0 .0000D-01  0 .0000D-01  1 .0000D 00  0 .0000D-01  0 .0000D-01  0 .0000D-01  0 .0000D-01
 0 .0000D-01  0 .0000D-01  0 .0000D-01  1 .0000D 00  0 .0000D-01  0 .0000D-01  0 .0000D-01
 0 .0000D-01  0 .0000D-01  0 .0000D-01  0 .0000D-01  1 .0000D 00  0 .0000D-01  0 .0000D-01
 1.0000D 00  0 .0000D-01  0 .0000D-01  0 .0000D-01  0 .0000D-01  1 .0000D 00  0 .0000D-01
 0 .0000D-01  1.0000D 00  0 .0000D-01  0 .0000D-01  0 .0000D-01  0 .0000D-01  1 .0000D 00
 0 .0000D-01  0 .0000D-01  0 .0000D-01  1 .0000D 00  0 .0000D-01  0 .0000D-01  0 .0000D-01
 0.0000D-01  0.0000D-01  0 .0000D-01  1 .0000D 00  0 .0000D-01  0 .0000D-01  0 .0000D-01
 1 .0000D 00  0 .0000D-01  0 .0000D-01  0 .0000D-01  1 .0000D 00  0 .0000D-01  0 .0000D-01
 0 .0000D-01  1.0000D 00  0 .0000D-01  0 .0000D-01  0 .0000D-01  1 .0000D 00  0 .0000D-01
 0 .0000D-01  0 .0000D-01  0 .0000D-01  1 .0000D 00  0 .0000D-01  0 .0000D-01  1 .0000D 00
 0 .0000D-01  5 .0000D-01  1 .7594D 01  9 .4761D 00  1 .0000D 00  1 .2433D 00  9 .0000D-01
-3 .5652D 01  1 .1239D 00  1 .0446D 00-2 .7545D 00  5 .5178D 01  1 .1741D 00  2 .2195E-01
-7 .4819D-01-1.2359D 01  1 .2201D 00  8 .7144D-01-1  3 .4480 00  4 .3728D 00  1 .6137D 00
 8 .0842D-01-1.2253D 00-2.6053D 00  1 .3012D 00  7 .4210D-01-1  3 .5900D 00  1 .5829D 01
 1 .3387D 00  6.9252D-01-5 .2542D-01-2 .9955D 01  1 .3731D 00  6 .2535D-01-2  9 .7729D 00
 4 .1347D 00  1 .4301D 00  4 .2281D-01-1 .6203D 00-2 .5784D 01  1 .4478D 00  3 .0634D-01
-2 .9902D 00-3 .2590D 00  1 .4611D 00  1 .4120D-01-3 .1589D 00-2 .4996D 01  1 .4516D 00
-2 .6934D-01-5 .5229D 00-5 .2293D 01  1 .4400D 00-5 .4713D-01-7 .7172D 00  1 .7751D 00
 1 .3981D 00-9.6209D-01-7 .2871D 00-4 .0859D 02  1 .3620D 00-1 .3946D 00-2 .0143D 01
 6.2399D 02  1.3164D 00-1.7161D 00-2 .3241D 00-1  5 .4478D 03  1 .2707D 00-2 .2219D 00
-3.9640D 01  2 .8068D 03  1 .2439D 00-2 .4900D 00-8  1 .3000D 00  5 .4439D 03  1 .2145D 00
-2 .2980D 00  4.6439D 01-1 .8031D 04  1 .1990D 00-2 .5878D 00-1 .1227D 02  1 .6001D 04
 1.1744D 00-2 .9622D 00  2 .4939D 01-4 .2553D 03  1 .1315D 00-3 .0521D 00-3 .7246D 01
 7 .5020D 03  1.0944D 00-2.9593D 00  5 .2711D 01-6 .6228D 03  1 .0561D 00-2 .8974D 00
-3.7799D 01  2.4472D 02  1 .0281D 00-3 .1958D 00-3  5 .5941D 01  4 .1665D 03  1 .0000D 00
 0.0000D-01  0.0000D-01  6.3667D 00  2 .9601D 00  1 .0000D 00  7 .8283D-01  0 .0000D-01
```

```
-2.71490 01  1.07720 00  6.32290-01-2  8.59000 00  3.90440 00  1.10750 00  4.82310-01
-1.84630 00  4.84250 01  1.12860 00  4.10990-01-3  8.87700-01-9.69010 00  1.14020 00
 3.84190-01-7  9.29900-01  1.42170 01  1.16720 00  3.62680-01-5.43000-02-1.45090 01
 1.16580 00  3.09620-01-3  2.20300-01  2.45880 01  1.20490 00  3.29900-01  4.48850-01
-4.23920 00  1.24060 00  3.53710-01-1.60110-02  7.24070 00  1.25980 00  3.63090-01
 8.69090-01-2.24320 00  1.27900 00  3.74190-01  2.32990-01  2.49310 00  1.31630 00
 1.14360-01  4.98780-01-1.50260 00  1.77410 00  4.33450-01  4.25730-01-3.99600 01
 1.35760 00  3.95070-01-1.79460 00  1.16780 02  1.36980-00  3.37620-01  1.89570 00
-3.73310 02  1.38050 00  2.99260-01-8.77690 00  3.18400 02  1.38590 00  1.80190-01
 1.10990 00-7.99590 02  1.38770 00  1.17450-01-1.00770 01-3.00460 03  1.38790 00
-1.34520-01-4.01950 01  4.10470 03  1.38560 00-3.29210-01-4.06470 00-3.56250 02
 1.38260 00-2.77260-01-7.11960 00-8.92770 03  1.37170 00-1.43440 00-1.37570 02
 2.93390 04  1.35300 00-9.74920-01  2.14210 02-1.05900 05  1.31460 00-7.93710 00
-1.13310 03  8.03250 03  1.19000 00-1.80730 01-1.15900 03  1.35870 05  1.00000 00
 1.00000 00-5.00000-01  1.67210 00  4.06180 00  1.00000 00-2.59350 00  0.00000-01
 1.85990 01  7.40220-01-2.21340 00  7.21990 00-1.36670 02  6.26660-01-2.02290 00
-2.26650-01  2.50180 02  5.33440-01-1.74230 00  1.16500 01-1.76480 02  4.58770-01
-1.37340 00  3.19520 00  3.84590 01  3.93360-01-1.15660 00  5.16900 00-8.62990 00
 7.09330-01-8.98710-01  4.71490 00-3.44460 01  2.98380-01-7.01020-01  2.93450 00
-1.25150 00  2.38530-01-3.96380-01  2.62180 00  3.81550-01  2.21180-01-2.56550-01
-2.64210 00-3.98950-01  2.11420-01-1.21000-01  2.59550 00  8.19840 00  2.12740-01
 1.61140-01  3.37090 00  3.37340 01  2.22680-01  3.32290-01  4.78640 00  1.43650 01
 2.46990-01  6.19010-01  5.58100 00  2.49770 02  2.72570-01  9.18920-01  1.34520 01
-2.86250 02  3.03220-01  1.18650 00  5.26870 00  1.10420 03  3.35940-01  1.63440 00
 3.18880 01  2.90810 03  3.56980-01  2.17570 00  6.45350 01  1.29950 02  3.82050-01
 2.82910 00  6.58380 01-2.73370 03  4.09200-01  3.30270 00  4.17750 01  1.16920 03
 4.39180-01  3.70390 00  5.18020 01  8.48710 03  5.03240-01  5.36690 00  1.75020 02
-3.30040 04  5.70750-01  5.10260 00-2.19910 02  9.37320 04  6.59820-01  1.08500 01
 1.06110 03-9.62200 03  8.03940-01  2.02710 01  9.72290 02-1.13990 05  1.00000 00
 1.50000 00  1.50000 00  2.67500 00  1.24480 00  1.00000 00-1.78760 00  0.00000-01
 1.28410 02  9.36740-01-1.07560 00  1.35220 01  1.21740 02  8.01490-01-1.58230-01
 2.01550 01-4.29710 02  8.02340-01  1.55770-01-2.00100 00  6.15820 01  8.18980-01
 2.06710-01  1.00060 00-6.06420 01  9.29440-01  1.78210-01-2.11150 00  1.85920 02
-1.40360-01  3.21720-01  7.50620 00-2.55350 02  8.01220-01  3.71690-01-5.63270 00
 8.21180 01  8.86390-01  2.53770-01  3.48200 00-9.63020 01  9.02370-01  3.02850-01
-1.63450 00  4.92000 01  9.16990-01  2.84140-01  9.11580-01-6.55210 00  9.47020-01
 3.41140-01  2.93770-01-2.70340 01  9.61260-01  3.29670-01-8.40560-01  1.24000 02
 9.81710-01  4.72910-01  6.01940 00-7.28730 02  9.95800-01  3.00810-01-1.69430 01
 1.23860 03  1.00230 00  3.22630-01  1.84690 01-9.61790 02  1.01320 00  4.88380-01
-4.71960 00-1.62500 03  1.01800 00  3.33140-01-2.29520 01  4.83500 03  1.02100 00
 3.46130-01  2.55430 01-9.99290 03  1.02390 00  1.83980-01-6.23950 01  9.67140 03
 1.02420 00  4.41450-03  2.04890 01-2.98420 03  1.02490 00-1.49630-02-2.31400 01
-8.95730 02  1.02280 00-3.56790-01-3.38790 01  1.49390 03  1.01540 00-6.80210-01
-1.34730 01-1.89090 03  1.00830 00-8.85100-01-3.09260 01  3.62550 03  1.00000 00
 0.00000-01  1.50000 00  3.24530 00  4.60810-01  1.00000 00-2.60850-01  0.00000-01
 3.79790 01  9.79930-01-5.02060-02  3.99960 00-4.58280 00  9.83010-01  1.60910-01
 3.74990 00-1.72150 01  9.94820-01  3.21860-01  2.91890 00  4.62330 00  1.01420 00
 4.70570-01  3.14560 00-2.18950 01  1.04200 00  6.03170-01  2.02130 00  5.99220 01
 1.07800 00  7.92550-01  5.17530 00-8.52540 01  1.12390 00  9.46150-01  7.65990-01
 3.47170 01  1.23990 00  1.23920 00  4.57570 00-3.77120 01  1.31150 00  1.42110 00
 2.57210 00  3.02180 01  1.38940 00  1.60270 00  4.13620 00-1.92500 01  1.55170 00
 1.90780 00  2.31560 00-1.46130 02  1.63700 00  1.87630 00-3.81650 00  1.99320 01
 1.73550 00  1.69570 00-2.71390 00-2.02010 03  1.77710 00  6.07030-01-6.63750 01
 2.38780 03  1.77660 00-3.14760-01  1.88980 00-6.75360 03  1.75380 00-2.23180 00
```


Best Available Copy

```
-1.6093D 02 1.0896D 04 1.7212D 00-3 3518D 00-3 86:0D C: : 9461D 04 : 6889D 00
-2.7611D 00 1.5647D 02-6 7196D 04 1 6830D 00-3 9869D 00-4 3499D 02 6 25:8D 04
 1.6194D 00-5.4184D 00 1 0111D 02-4 9759D 04 1 5252D 00-9 2521D 00-6 2597D 02
 6.7777D 0' 1.3887D 00-1 1887D 01 1 8669D 02-2 6508D 04 : 2324D 00-: 1E:1D 0:
-1.7557D 02 3.9946D 03 1 1165D 00-1 3261D 01-1 3872D 02 : 6262D 04 1 0000D 00
 0.0000D-01 0 0000D-01 0.0000D-01 0 0000D-01 1.0000D 00 0 0000D-01 0 0000D-01
 0.0000D-01 1.0000D 00 0 0000D-01 0 0000D-01 0 0C00D-0: : 0000D 00 0 0000D-01
 0.0000D-01 0.0000D-01 1 0000D 00 0 0000D-01 0 0000D-01 0 0000D-01 : 0000D 00
 0.0000D-01 0 0000D-01 0.0000D-01 1 0000D 00 0 0000D-C: 0 0000D-0: 0 0000D-01
 1 0000D 00 0 0000D-01 0 0000D-01 0 0000E-01 1 0C00D 00 0 0000D-0: 0 0000D-01
 0.0000D-01 1.0000D 00 0.0000D-01 0 0000D-01 0 0C00D-0: : 0000D 00 0 0000D-01
 0.0000D-01 0.0000D-01 1.0000D 00 0 0000D-01 0 0000D-01 0 0000D-01 1 0000D 00
 0.0000D-01 0 0000D-01 0.0000D-01 1 0000D 00 0 0000D-01 0 0000D-01 0 0000D-01
 1.0000D 00 0 0000D-01 0 0000D-01 0 0000D-01 1 0C00D 00 0 0000D-01 0 0000D-01
 0.0000D-01 1.0000D 00 0.0000D-01 0 0000D-01 0 0C00D-0: : 0000D 00 0 0000D-01
 0.0000D-01 0 0000D-01 1 0000D 00 0 0000D-01 0 0C00D-0: 0 0000D-01 1 0000D 00
 0.0000D-01 0.0000D-01 0.0000D-01 1 0000D 00 0 0C00D-0: 0 0000D-01 0 0000D-01
 1.0000D 00 0.0000D-01 0.0000D-01 0 0000D-01 1 0C00D 00 0 0000D-01 0 0000D-01
 0.0000D-01 1.0000D 00 0.0000D-01 0 0000D-01 0.0000D-01 1 0000D 00 0 0000D-01
 0.0000D-01 0.0000D-01 1.0000D 00 0 0000D-01 0 0000D-01 0 0000D-01 1 0000D 00
 0.0000D-01 0.0000D-01 0.0000D-01 0 0000D-01 1 0C00D 00 0 0000D-01 0 0000D-01
 0.0000D-01 1.0000D 00 0 0000D-01 0 0000D-01 0 0C00E-0: : 0000D 00 0 0000D-01
 0.0000D-01 0.0000D-01 1.0000D 00 0 0000E-01 0 0000D-0: 0 0000D-01 1 0000D 00
 0.0000D-01 0.0000D-01 0.0000D-01 1 0000D 00 0 0C00D-0: 0 0000D-01 0 0000D-01
 1.0000D 00 0.0000D-01 0.0000D-01 0 0000D-01 1 0C00D 00 0 0000D-01 0 0000D-01
 0.0000D-01 1.0000D 00 0.0000D-01 0 0000D-01 0 0C00D-01 : 0000D 00 0 0000D-01
 0.0000D-01 0.0000D-01 1 0000D 00 0 0000D-01 0 0C00D-01 0 0000D-01 1 0000D 00
 0.0000D-01 0 0000D-01 0 0000D-01 1 0000D 00 0 0C00I-01 0 0000D-01 0 0000D-01
 1.0000D 00 0.0000D-01 0 0000D-01 0 0000E-01 1 0C0CD 00 0 0000D-01 0 0000D-01
 0.0000D-01 1.0000D 00 0.0000D-01 0 0000D-01 0 0C00I-01 : 0000D 00 0 0000D-01
 0.0000D-01 0.0000D-01 1 0000D 00 0 0000D-01 0 0C00D-01 0 0000D-01 : 0000D 00
 0.0000D-01 0 0000D-01 0 0000D-01 0 0000D-01 1 0000D 00 0 0000D-01 0 0000D-01
 0.0000D-01 1.0000D 00 0 0000D-01 0 0C0CI-01 0 0000D-01 : 0000D 00 0 0000D-01
 0 0000D-01 0 0000D-01 1 0000D 00 0 0000D-01 0 0C00I-01 0 0000D-01 1 0000D 00
 0 0000D-01 0 0000D-01 0 0000D-01 1 0000D 00 0 0C00I-01 0 0000D-01 0 0000D-01
 1.0000D 00 0.0000D-01 0 0000D-01 0 0000E-01 1 0C0CD 00 0 0000D-01 0 0000D-01
 0 0000D-01 1.0000D 00 0 0000D-01 0 0000D-01 0 0000D-01 : 0000D 00 0 0000D-01
 0.0000D-01 0 0000D-01 1 0000D 00 0 0C00I-01 0 0000D-01 0 0C00D-01 1 0000D 00
 0 0000D-01 0 0000D-01 0 0000D-01 1 0000D 00 0 0000D-01 0 0C00D-01 0 0000D-01
 1 0000D 00 0 0000D-01 0 0000D-01 0 0000E-01 : 0000D 00 0 0000D-01 0 0000D-01
 0 0000D-01 1 0000D 00 0 0000D-01 0 0000D-01 0 0C00D-01 : 0000D 00 0 0C00D-01
 0 0000D-01 0 0000D-01 1 0000D 00 0 0000D-01 0 0C00I-01 0 0000D-01 0 0000D-01
 0 0000D-01 0 0000D-01 0 0000D-01 1 0000D 00 0 0C00I-01 0 0000D-01 0 0000D-01
```

```
 1.0000D 00 0 0000D-01 0 0000D-01 0 0000D-01 1 0000D 00 0 0000D-01 0 0000D-01
 0.0000D-01 1 0000D 00 0 0000D-01 0 0000D-01 0 0000D-01 1 0000D 00 0 0000D-01
 0 0000D-01 0 0000D-01 1 0000D 00 0 0000D-01 0 0000D-01 0 0000D-01 1 0000D 00
 0.0000D-01 0 0000D-01 0 0000D-01 1 0000D 00 0 0000D-01 0 0000D-01 0 0000D-01
 1 0000D 00 0 0000D-01 0 0000D-01 0 0000D-01 1 0000D 00 0 0000D-01 0 0000D-01
 0 0000D-01 1 0000D 00 0 0000D-01 0 0000D-01 0 0000D-01 1 0000D 00 0 0000D-01
 0 0000D-01 0.0000D-01 1 0000D 00 0 0000D-01 0 0000D-01 0 0000D-01 1 0000D 00
 0 0000D-01 0 0000D-01 0.0000D-01 1 0000D 00 0 0000D-01 0 0000D-01 0 0000D-01
 1.0000D 00 0 0000D-01 0 0000D-01 0 0000D-01 1 0000D 00 0 0000D-01 0 0000D-01
 0.0000D-01 1 0000D 00 0.0000D-01 0 0000D-01 0 0000D-01 1 0000D 00 0 0000D-01
 0.0000D-01 0 0000D-01 1 0000D 00 0 0000D-01 0 0000D-01 0 0000D-01 1 0000D 00
 1.5000D 00 1 5000D 00 2 6750D 00 1 2448D 00 1 0000D 00-1 7876D 00 0 0000D-01
 1 2841D 02 8 3674D-01-1 0756D 00 1 3522D 01 1 2174D 02 8 0149D-01-1 5823D-01
 2.0155D 01-4 7971D 02 8 0834D-01 2 5577D-01-7 0010D 00 8 1582D 01 8 1886D-01
 2.0671D-01 1 0006D 00-6 0642D 01 8 2944D-01 1 7621D-01-2 1115D 00 1 8392D 02
 8.4036D-01 3 2172D-01 7 5662D 00-2 5535D 02 8 6122D-01 3 7169D-01-5 6327D 00
 8 3118D 01 8 8638D-01 2 5377D-01 3 4920D 00-9 6301D 01 9 0237D-01 3 0285D-01
-1 6345D 00 4 9195D 01 9 1699D-01 2 8414D-01 9 1136D-01-6 5228D 00 9 4702D-01
 3 4116D-01 2 9443D-01-2 7140D 01 9 6126D-01 3 2962D-01-8 4425D-01 1 2395D 02
 9 8170D-01 4.7257D-01 6 0126D 00-7 2411D 02 9 9560D-01 3 0255D-01-1 6804D 01
 1.2113D 03 1.0023D 00 3.1716D-01 1 7826D 01-8 6811D 02 1 0131D 00 4 9463D-01
-3 1044D 00-1 9299D 03 1 0180D 00 3 3832D-01-2 4758D 01 5 0662D 03 1 0210D 00
 3.4483D-01 2 6056D 01-1 0067D 04 1 0239D 00 1 8433D-01-6 2532D 01 9 6906D 03
 1.0242D 00 4 2986D-03 2 0517D 01-2 9866D 03 1 0249D 00-1 4934D-02-2 3148D 01
-8.9488D 02 1.0228D 00-3 5680D-01-3 3577D 01 1 4937D 03 1 0154D 00-6 8020D-01
-1 3473D 01-1.8908D 03 1 0083D 00-3 8510D-01-7 0916D 01 3 6255D 03 1 0000D 00
 0 0000D-01 1.0000D 00 3 2453D 00 4 6703D-01 1 0000D 00-2 6174D-01 0 0000D-01
 3 7838D 01 9.7980D-01-5.1933D-02 3 9847D 00-4 4661D 00 9 8277D-01 1 5854D-01
 3 7413D 00-1.7287D 01 9 9445D-01 3 1899D-01 2 9068D 00 4 5749D 00 1 0137D 00
 4.6705D-01 3.1312D 00-2 1949D 01 1 0413D 00 5 9865D-01 2 0047D 00 5 9748D 01
 1.0770D 00 7 8708D-01 5 1490D 00-8 5274D 01 1 1226D 00 9 3971D-01 7 4129D-01
 3 4434D 01 1 2376D 00 1 2276D 00 4 5172D 00-3 8115D 01 1 3083D 00 1 4138D 00
 2 4923D 00 2 9625D 01 1 3855D 00 1 5825D 00 4 0257D 00-2 0284D 01 1 5503D 00
 1.8725D 00 2 1073D 00-1 4696D 02 1 6289D 00 1 8316D 00-4 0592D 00 1 7760D 01
 1.7245D 00 1 6342D 00-3 0768D 00-2 0043D 03 1 7640D 00 5 4195D-01-6 6242D 01
 2.3719D 03 1 7617D 00-3 8254D-01 1 5676D 00-6 6834D 03 1 7373D 00-2 2869D 00
-1.5956D 02 1 0824D 04 1 7042D 00-7 3961D 00-2 8650D 01 1 9939D 04 1 6714D 00
-2 8110D 00 1.5480D 02-6 6390D 04 1 6451D 00-4 0262D 00-4 2957D 02 6 1670D 04
 1 6013D 00-5.4380D 00 9 8917D 01-4 8716D 04 1 5071D 00-9 1934D 00-6 1295D 02
 6 5106D 04 1 3715D 00-1 1862D 01 1 6771D 02-2 0098D 04 1 2165D 00-1 1447D 01
-1.0696D 02 3 2234D 03 1 1068D 00-1 2297D 01-7 7217D 01 9 0521D 03 1 0000D 00
```

```
RETRIEVAL FILE NO   TP4-05-2
      FILE SIZE =    20
      L/D       =     0.5000
      ALFA      =     1.1250
 0 00000D-01  1 07240D-01  2 21290D-01  3 21330D-01  4 96890D-01  5 67520D-01  6 70900D-01
 7 49570D-01  8.10950D-01  8.61530D-01  0 82930D-01  9 02720D-01  9 11450D-01  9 27110D-01
 9.41280D-01  9.53290D-01  9.72260D-01 -9 65490D-01  9 92330D-01  1 00000D 00
 1 00000D 00  0 00000D-01  3 21200D-01  1 35640D 00  1 00000D 00-2 14560D 00  0 00000D-01
 8 62940D 01  7 87640D-01-1 64930D 00  9 23440D 00-3 79700D 01  6 58360D-01-8 40160D-01
 4.93530D 00-4.30620D 01  5.93820D-01-5 61920D-01  6 27340D-01-1 67740D-01  4 97540D-01
-4 58140D-01  5.98950D-01-4.95750D 00  4 65420D-01-4 27640D-01  2 37410D-01  6 58070D 01
 4.34510D-01  3.78030D-02  7.83040D 00-1 14840D 02  4 49980D-01  3 04420D-01-2 85030D-01
 1 16890D 02  4.72630D-01  5.07120D-01  6 88970D 00  1 27160D 02  5 03840D-01  1 01820D 00
 1.33210D 01-2 09050D 02  5 34330D-01  1 25540D 00  8 94900D 00  1 04780D 03  5 62270D-01
 1.63590D 00  2.95940D 01  1.80600D 02  5 77690D-01  1 90100D 00  2 11690D 01-6 53190D 02
 6 10960D-01  2.30900D 00  2 09400D 01  2 26870D 03  6 46760D-01  2 93350D 00  5 30900D 01
 8 25610D 02  6.84870D-01  3.53090D 00  6 30070D 01  2.05390D 03  7 65520D-01  5 09590D 00
 1.02000D 02  1.80560D 04  8.48810D-01  8 02450D 00  3 40430D 02  6 25770D 03  9 11020D-01
 1 04660D 01  3.83040D 02-4.93210D 04  1 00000D 00
 0 00000D-01  0.00000D-01  0.00000D-01  0 00000D-01  1 00000D 02  0 00000D-01  0 00000D-01
 9 00000D-01  1 00000D 00  0.00000D-01  0 00000D-01  6 30000D-01  1 00000D 00  0 00000D-01
 0 00000D-01  0.00000D-01  1.00000D 00  0.00000D-01  0 00000D-01  0 00000D-01  1 00000D 00
 0.00000D-01  0.00000D-01  0.00000D-01  1 00000D 00  6 00000D-01  0 00000D-01  0 00000D-01
 1 00000D 00  0.00000D-01  0.00000D-01  0.00000D-01  1 00000D 00  0 00000D-01  0 00000D-01
 0.00000D-01  1 00000D 00  0.00000D-01  0 00000D-01  0 00000D-01  1 00000D 00  0 00000D-01
 0.00000D-01  0 00000D-01  1.00000D 00  0 00000D-01  0 00000D-01  0 00000D-01  1 00000D 00
 0.00000D-01  0.00000D-01  0.00000D-01  1 00000D 00  0 00000D-01  0 00000D-01  0 00000D-01
 1.00000D 00  0 00000D-01  0.00000D-01  0 00000D-01  1 00000D 00  0 00000D-01  0 00000D-01
 0 00000D-01  1 00000D 00  0 00000D-01  0 00000D-01  0 00000D-01  1 00000D 00  0 00000D-01
 0.00000D-01  0.00000D-01  1.00000D 00  0 00000D-01  0.00000D-01  0.00000D-01  1 00000D 00
 0.00000D-01  0.00000D-01  0.00000D-01  1 00000D 00
 0.00000D-01  5 00000D-01  2.17410D 01  9 07990D 00  1 00000D 00  1 34530D 00  0 00000D-01
-3 07740D 01  1 13790D 00  1.16830D 00-3 30030D 00  1 82810D 01  1 25430D 00  9 10920D-01
-1 21530D 00-1.65250D 00  1.33900D 00  7 80960D-01-1 38070D 00-1 52210D 00  1 45020D 00
 5.25470D-01-1.63830D 00-2.58070D 01  1 48250D 00  3 37370D-01-3 52070D 00  2 79310D 01
 1.50510D 00  1.17110D-01-2.97570D-01-1 02080D 02  1 50670D 00-1 58830D-01-7 51160D 00
-5.02340D 01  1.48080D 00-7.14530D-01-1 05950D 01-2.21260D 01  1 43070D 00-1 27870D 00
-1 17140D 01-1.01700D 03  1.39900D 00-1.76210D 00-3 34720D 01  1 38460D 03  1 35930D 00
-2.15340D 00-6.05820D 00-7.42570D 01  1 34030D 00-2.20910D 00-6 70600D 00-2.99320D 03
 1 30300D 00-2.67560D 00-5.28760D 01  2 52870D 02  1 26090D 00-3.17100D 00-1 70420D 01
 3 41700D 03  1.22260D 00-3.12920D 00  2 40060D 01-9 92110D 03  1 15630D 00-4 45860D 00
-1.64180D 02  1.15360D 04  1.08740D 00-5 62120D 00-1 16040D 01-1 29980D 04  1 04060D 00
-5.99520D 00-9.92860D 01  1.27840D 04  1 00000D 00
 0.00000D-01  0.00000D-01  5.64870D 00  2 51110D 00  1 00000D 00  0 31600D-01  0 00000D-01
-9.27770D 00  1.08730D 00  7.78440D-01-9 94960D-01  6 37670D 00  1 17130D 00  7 09690D-01
-2.10670D-01  3.23440D 00  1.24180D 00  7 04800D-01  1 12900D-01-1 05140D-01  1 36260D 00
 7.22410D-01  9.51040D-02-1.21120D 01  1 41480D 00  6 97130D-01-7 08190D-01-6 72120D 00
 1.48820D 00  5.61450D-01-1.56370D 00  4 23670D 01  1 52650D 00  5 56730D-01  1 43030D 00
-2.54370D 01  1.56240D 00  5.96610D-01-1 31070D-01-6.16380D 01  1 59110D 00  5 11140D 01
-3.24860D 00  2.13930D 02  1.60160D 00  4 90600D-01  1 32220D 00-7 19760D 02  1 61070D 00
 3.75840D-01-1.29210D 01-9.15770D 02  1 61330D 00  2.28260D-01-2 09110D 01  3 68730D 02
 1.61460D 00-5.22730D-02-1.49170D 01  1 35740D 03  1 61300D 00-1 27370D-01  4 31920D 00
-2.11900D 04  1.60570D 00-1.60440D 00-2 50230D 02  3.92000D 04  1 57480D 00  7 01150D-01
 4.93330D 02-2.71280D 05  1.52260D 00-1 65030D 01-3 09490D 03  3 21150D 04  1 34250D 00
```


Best Available Copy

Best Available Copy

```
 0.00000D-01  1.00000D 00  0.00000D-01  0  00000D-01  0  00000D-01  :  00000D 00  0  00000D-01
 0 00000D-01  0.00000D-01  1.00000D 00  0  00000D-01  0  00000D-01  0  00000D-01  :  00000D 00
 0 00000D-01  0.00000D-01  0.00000D-01  1  00000D 00  0  00000D-01  0  00000D-01  0  00000D-01
 1.00000D 00  0 00000D-01  0.00000D-01  0  00000D-01  1  00000D 00  0  00000D-01  0  00000D-01
 0.00000D-01  1.00000D 00  0.00000D-01  0  00000D-01  0  00000D-01  :  00000D 00  0  00000D-01
 0.00000D-01  0.00000D-01  1.00000D 00  0  00000D-01  0  00000D-01  0  00000D-01  :  00000D 00
 0 00000D-01  0 00000D-01  0.00000D-01  :  00000D 00
 0.00000D-01  0.00000D-01  0.00000D-01  0  00000D-01  :  00000D 00  0  00000D-01  0  00000D-01
 0.00000D-01  1.00000D 00  0.00000D-01  0  00000D-01  0  00000D-01  :  00000D 00  0  00000D-01
 0 00000D-01  0.00000D-01  1.00000D 00  0  00000D-01  0  00000D-01  0  00000D-01  :  00000D 00
 0 00000D-01  0.00000D-01  0.00000D-01  1  00000D 00  0  00000D-01  0  00000D-01  0.00000D-01
 1.00000D 00  0 00000D-01  0.00000D-01  0  00000D-01  :  00000D 00  0  00000D-01  0  00000D-01
 0.00000D-01  1.00000D 00  0.00000D-01  0  00000D-01  0  00000D-01  :  00000D 00  0  00000D-01
 0.00000D-01  0.00000D-01  1.00000D 00  0  00000D-01  0  00000D-01  0  00000D-01  :  00000D 00
 0.00000D-01  0.00000D-01  0.00000D-01  1  00000D 00
 0 00000D-01  0 00000D-01  0.00000D-01  0  00000D-01  :  00000D 00  0  00000D-01  0.00000D-01
 0 00000D-01  1.00000D 00  0.00000D-01  0  00000D-01  0  00000D-01  :  00000D 00  0  00000D-01
 0 00000D-01  0.00000D-01  1.00000D 00  0  00000D-01  0  00000D-01  0  00000D-01  :  00000D 00
 0.00000D-01  0.00000D-01  0.00000D-01  1  00000D 00  0  00000D-01  0.00000D-01  0.00000D-01
 1 00000D 00  0 00000D-01  0 00000D-01  0  00000D-01  :  00000D 00  0  00000D-01  0  00000D-01
 0.00000D-01  1.00000D 00  0.00000D-01  0  00000D-01  0  00000D-01  :  00000D 00  0  00000D-01
 0.00000D-01  0.00000D-01  1.00000D 00  0  00000D-01  0  00000D-01  0  00000D-01  :  00000D 00
 0 00000D-01  0.00000D-01  0.00000D-01  1  00000D 00  0  00000D-01  0  00000D-01  0.00000D-01
 1 00000D 00  0.00000D-01  0.00000D-01  0  00000D-01  :  00000D 00  0  00000D-01  0  00000D-01
 0.00000D-01  1.00000D 00  0.00000D-01  0  00000D-01  0  00000D-01  :  00000D 00  0  00000D-01
 0 00000D-01  0.00000D-01  1.00000D 00  0  00000D-01  0  00000D-01  0  00000D-01  1  00000D 00
 0 00000D-01  0.00000D-01  0.00000D-01  1  00000D 00
 0 00000D-01  1.50000D 00  1.65330D 00  1  37410D 00  1  00000D 00-3  58680D-01  0.00000D-01
-1.44740D 01  9.59560D-01-4.41910D-01-1  55220D 00  2.38900D 01  9.03970D-01-4.63560D-01
 1.17250D 00  4.93060D 00  8.64290D-01-3  21590D-01  1  66570D 00-1  47900D 01  8 21760D-01
-2 51500D-01-8.37550D-01  5.38240D 01  8  04670D-01-1  69450D-01  3.08780D 00-3  63130 01
 7 96380D-01-5.48980D-02-1.10210D 00  3  57710D 01  7  91850D-01-4.34610D-02  1  42580D 00
 5.61160D 01  7.94030D-01  1.49770D-01  4  87030D 00  6  30140 01  8.09190D-01  4.76700D-01
 8 05740D 00-9.12660D 02  8.19750D-01  4  40220D-01-1.14680 01  3 12940 03  8 30260D-01
 8 26480D-01  5 04880 01-7.59850D 03  8  38550D-01  9  77720D-01-1 59010 01  1 77160 03
 8 53060D-01  9.47560D-01  1.19410 01-3  18180 02  8  67540D-01  1  08480 00  7.43250 00
 2.99980 03  8.81970D-01  1.39060 00  4  34680 01-2.97240 03  9  12780D-01  1  66030 00
-1 29150 01  1.62510 04  9.40150D-01  2  93100 00  2.02030 02-5  30740 03  9  64250D-01
 4.17310 00  1.66220 02-2.14030 04  1  00000 00
 0.00000D-01  1.50000 00  5.21030 00  4  51830D-01  1  00000 00-2  24550D-02  0  00000D-01
 3.91750 00  9.98290D-01-9.27350D-04  4.20120D-01  3  28870 00  1  00170 00  6.83770D-02
 7 95200D-01  5.07120D-01  1.01260 00  1  50470D-01  8  45930D-01  5  72650 00  1  05480 00
 3.75670D-01  1.81520 00-4  48180 01  1  08420 00  3  88870D-01-1  45330 00  1.50690 02
 1.15790 00  1.22430 00  1.59340 01-1  84450 02  1  27340 00  1  88970 00  2.89800 00
-1.63510 01  1.39420 00  2.03680 00  1  89430 00-1  01400 02  1  49750 00  2 00290 00
-3 23430 00-3.54910 03  1.53380 00  1  12150 00-7  91630 01  4  32210 03  1  54610 00
 4.01260D-01  6.40730 00-2  5541D 02  1.54930 00  4  47440D-01  4  1792D 00-1  21330 04
 1 54950 00-9.74930D-01-1.85830 02  1  27540 04  1  52310 00-2.32770 00-5  09140 00
-3.27190 04  1.48530 00-4.74960 00-3  98130 02-1  89480 03  1  32150 00-1  26420 01
-4.34070 02  7.01950 04  1  14330 00-1  22440 01  4  94370 02-3  50780 04  1.07020 00
-9.70670 00  2.57740 02-3.31860 04  1  00000 00
```


Best Available Copy

```
 RETRIEVAL FILE NO  TP4-05-3
       FILE SIZE =   17
       L/D       =    0.5000
       ALFA      =    1.1250
 0.0000D-01  1.4712D-01  2.8175D-01 3 9921D-01 4 3370D-01 5 0315D-01 7 7605D-01
 8.6093D-01  8.9838D-01  9.1395D-01 9 2083D-01 9 4008D-01 9 6026D-01 9 6839D-01
 9.8396D-01  9.9211D-01  1.0000D 00
 1.0000D 00  0.0000D-01  2.1177D-01 1 3446D 00 1 0050D 00-1 3.148D 00 0 0000D-01
 2.4124D 01  8.1938D-01-1 0.537D 00 3 5490D 00-2 4.562D 01 6 3389D-01-7 9397D-01
 3.0944D-01  1.8010D 01  6.1363D-01-6 3341D-01 2 4647D 00-3 2.402D 01 5 6005D-01
-5.4895D-01-6.3700D-01  1.7640D 01 5 0000D-01-5 1300D-01 1 2938D 00 1 7539D 01
 4.5000D-01-1.8399D-01  3 6352D 00 7 5720D 01 4 7943D-01 8 5259D-01 1 3047D 01
 1.9416D 02  5 2221D-01  1.4773D 00 2 0318D 01 1 5875D 03 5 4866D-01 1 9E+2D 00
 4 5038D 01-4 5898D 03  5 6317D-01 2 1875D 00 1 3475D 01 2 1511D 03 6 1072D-01
 2 8445D 00  5.4837D 01  1 8750D 03 6 6147D-01 4 7377D 00 9 2746D 01-1 2279D 02
 7 1962D-01  5 0467D 00  8 2797D 01 1 7707D 04 6 9421D-01 6 4834D 00 3 5858D 02
 4 0431D 03  9 0078D-01  1 1539D 01 3 9152D 02-4 9599D 04 1 0000D 00
 0 0000D-01  0.0000D-01  0 0000D-01 0 6660D-01 1 0000D 00 0 0000D-01 0 0000D-01
 0 0000D-01  1.0000D 00  0 0000D-01 0 0000D-01 2 0000D-01 1 0000D 00 0 0000D-01
 0.0000D-01  0.0000D-01  1 0000D 00 0 0003D-01 1 0001D-01 8 0000D-01 1 0000D 00
 0 0000D-01  0 0000D-01  0 0000D-01 1 9999D 00 7 7846D-01 9 6466D-01 6 9999D-01
 1 0000D 00  0.0000D-01  0 5010D-01 0 6666D-01 1 0000D 00 0 0000D-01 0 0000D-01
 0.0000D-01  1 0000D 00  0 0000D-01 0 0000D-01 6 0000D-01 . 0000D 00 0 0000D-01
 0 0000D-01  0 0000D-01  1 0000D 00 0 0000D-01 6 0000D-01 0 0000D-01 1 0000D 00
 0.0000D-01  0.0000D-01  0.0000D-01 1 9999D 00 6 0000D-01 5 0000D-01 0 0000D-01
 1 0000D 00  0 0000D-01  0 0000D-01 0 0000D-01 1 0000D 00 0 0000D-01 0 0000D-01
 0.0000D-01  1.0000D 00  0 0000D-01 0 0000D-01 0 0000D-01 1 0000D 00
 0 0000D-01  5 0000D-01  2 4993D 01 9 3723D 00 1 0000D 00 . 3700D 00 0 0000D-01
-1.8225D 01  1.1860D 00  1 1326D 00-2 6812D 00 1 1137D 01 1 3187D 00 8 7271D-01
-1.1818D 00  2 7703D 00  1 4138D 00 7 5302D-01-6 5637D-01-5 1099D 01 1 4768D 00
 5.3327D-01-3.7949D 00  3 7251D 01 1 5206D 00 3 4104D-01 2 8249D-01-6 9883D 01
 1 5409D 00-2 4396D-01-9 0467D 00-1 4582D 01 1 4361D 00-1 4908D 00-1 0859D 01
-3 9896D 02  1 3695D 00-2 1673D 00-2 5301D 01 3 0975D 03 1 3324D 00-2 3147D 00
 6 8599D 00-1 0527D 04  1 3176D 00-2 5171D 00-4 5626D 01 3 8423D 03 1 2604D 00
-3 2445D 00-9 9574D 00-1 5665D 03 1 1203D 00-3 7677D 00-4 1460D 01 1 7289D 04
 1.1604D 00-3.5297D 00  9 8980D 01-2 2641D 04 1 1032D 00-4 7741D 00-2 5306D 02
 5 3068D 03  1 0567D 00-6 6241D 00-2 1041D 02 2 6656D 04 1 0000D 00
 0 0000D-01  0.0000D-01  5 1453D 00 2 7866D 00 1 0000D 00 6 6789D-01 0 0000D-01
-5 8018D 00  1 0952D 00  6 5.0D-01-8 5355D-01 6 2266D 00 1 1714D 00 5 4662D-01
-1.5211D-02  2.0704D-01  1 2356D 00 5 4626D-01 9 1063D-03 8 5049D 00 1 2894D 00
 5 8509D-01  8.1275D-01-9 1882D 00 1 3554D 00 6 1901D-01-1 5297D-01 1 8093D 01
 1.4434D 00  7.5447D-01  2 2224D 00-1 1.32D 02 1 5188D 00 1 7102D-01-1 1612D 01
 1.2600D 02  1.5181D 00-1 7549D-01-6 0932D 00-1 1261D 03 1 5138D 00-4 1935D-01
-2 4427D 01  1 8183D 03  1 5105D 00-5 4444D-01-1 1908D 01-4 2894D 02 1 4973D 00
-8.5309D-01-2 0164D 01-4 9236D 03  1 4692D 00-2 2629D 00-1 1957D 02 3  593D 04
 1 4502D 00-2 0265D 00  1 7771D 02-1 0911D 05 1 3714D 00-1 2492D 01-1 9217D 03
 1.7001D 04  1 2207D 00-2 4324D 01-1 3832D 03 1 7523D 05 1 0000D 00
 0 0000D-01  0 0000D-01  1 1706D 00 3 5812D-01 1 0000D 00 1 0424D 00 0 0000D-01
-4.9588D 00  1.1507D 00  9.8876D-01-7 2952D-01 4 0533D 00 1 2789D 00 9 2728D-01
-1 8380D-01  9 9187D 00  1 3892D 00 9 7410D-01 9 9177D-01-4 2293D 01 1 4797D 00
 8 7800D-01-3.0152D 00  5 6154D 01 1 5760D 00 6 8436D-01 3 1312D 00-6 1899D 01
 1.6914D 00  7.5080D-01-5 1321D 00-7 8434D 01 1 7200D 00-4 9268D-01-1 4890D 01
-1 8407D 03  1 6750D 00-2 3407D 00-8 3814D 01 1 0504D 04 1 6350D 00-2 3725D 00
 7 9741D 01-1 0195D 04  1 6200D 00-2 0651D 00 9 5463D 00-1 8529D 04 1 5600D 00
```

```
-5 3136D 00-3.4710D 02 2.7684D 04 1 4200D 00-6 6805D 00 2 1164D 02-1.2445D 05
 1.3616D 00-9.0672D 00-7.9925D 02 7 6581D 04 1 1717D 00-1 2227D 01 3 9347D 02
-4.2358D 04 1.0813D 00-1.0427D 01 4 8428D 01-6 1350D 03 1 0000D 00
 0.0000D-01 1.5000D 00 3.3595D 00 1 3826D 00 1 0000D 00-1 7922D-01 0 0000D-01
-6.2225D 00 9.7033D-01-2.4656D-01-9 1543D-01 8 0732D 00 9 3212D-01-2 9664D-01
 1.7152D-01 4.6438D 00 8.9972D-01-2 4446D-01 7 1695D-01-9 9897D-01 8 7968D-01
-1.8118D-01 6.2256D-01 3.6072D 00 8 6437D-01-9 1424D-02 1 0174D 00 9 9059D 00
 8.6515D-01 1.3266D-01 2 3398D 00-6 3597D 01 8.7936D-01-6 7673D-02-5 5638D 00
 7.4753D 02 8.7947D-01 2.4818D-01 2 2431D 01-1 9568D 03 8 8483D-01 3 6023D-01
-8.0390D 00-2.5467D 03 8.8698D-01 2 4451D-01-2 5575D 01 2 8697D 03 8 9036D-01
 2.8382D-01 2.9659D 01 5 1197D 02 9 0283D-01 9 8667D-01 3 9992D 01-1 2534D 04
 9.1104D-01 8.9802D-01-6.1820D 01 2 1715D 04 9 3120D-01 2 5689D 00 2 7639D 02
-9.7618D 03 9.6042D-01 4.4964D 00 1 9687D 02-2.4940D 04 1 0000D 00
 0.0000D-01 1.5000D 00 7.1491D 00 3 9962D-01 1 0000D 00-4 9641D-03 0 0000D-01
 1.7044D 00 1 0002D 00 1 3480D-02 2 5074D-01 1 5446D-01 1 0043D 00 4 8639D-02
 2.7154D-01 1.0653D 01 1.0148D 00 1 5401D-01 1 5227D 00-2 3050D 01 1 0329D 00
 1.9499D-01-6.5525D-01 6.0214D 01 1 0635D 00 4 8398D-01 5 9356D 00-2 8838D 01
 1.1695D 00 1.0194D 00 2.0858D 00 1 4740D 02 1 3595D 00 2 4169D 00 2 0405D 01
-1.2049D 03 1.4538D 00 2.3361D 00-2 4720D 01 7 1567D 03 1 4916D 00 2 8188D 00
 8.6719D 01-3.9037D 04 1.5110D 00 2 4905D 00-1 8207D 02 9 6124D 03 1 5366D 00
 7.6661D-01 2.9424D 00-2.4158D 04 1 5196D 00-4 0941D 00-4 3462D 02-5 6607D 04
 1 4653D 00-9 8983D 00-9 4444D 02 7 7178D 04 1 2452D 00-1 5247D 01 2 5758D 02
-5.9637D 04 1.1242D 00-1.5127D 01-2.2821D 02 2.8911D 04 1 0000D 00
 0.0000D-01 0.0000D-01 0.0000D-01 0.0000D-01 1 0000D 00 0 0000D-01 0 0000D-01
 0.0000D-01 1.0000D 00 0 0000D-01 0 0000D-01 0 0000D-01 1 0000D 00 0 0000D-01
 0.0000D-01 0.0000D-01 1 0000D 00 0 0000D-01 0 0000D-01 0 0000D-01 1 0000D 00
 0 0000D-01 0.0000D-01 0.0000D-01 1 0000D 00 0 0000D-01 0 0000D-01 0 0000D-01
 1.0000D 00 0.0000D-01 0 0000D-01 0 0000D-01 1 0000D 00 0 0000D-01 0 0000D-01
 0.0000D-01 1.0000D 00 0.0000D-01 0 0000D-01 0 0000D-01 1 0000D 00 0 0000D-01
 0 0000D-01 0.0000D-01 1.0000D 00 0 0000D-01 0 0000D-01 0 0000D-01 1 0000D 00
 0.0000D-01 0.0000D-01 0 0000D-01 1 0000D 00 0 0000D-01 0 0000D-01 0 0000D-01
 1.0000D 00 0.0000D-01 0.0000D-01 0 0000D-01 1 0000D 00 0 0000D-01 0 0000D-01
 0 0000D-01 1.0000D 00 0.0000D-01 0 0000D-01 0 0000D-01 1 0000D 00 0 0000D-01
 0 0000D-01 0.0000D-01 0.0000D-01 0 0000D-01 1 0000D 00 0 0000D-01 0 0000D-01
 0 0000D-01 1.0000D 00 0.0000D-01 0 0000D-01 0 0000D-01 1 0000D 00 0 0000D-01
 0.0000D-01 0.0000D-01 1.0000D 00 0 0000D-01 0 0000D-01 0 0000D-01 1 0000D 00
 0.0000D-01 0.0000D-01 0.0000D-01 1 0000D 00 0 0000D-01 0 0000D-01 0 0000D-01
 1.0000D 00 0.0000D-01 0.0000D-01 0 0000D-01 1 0000D 00 0 0000D-01 0 0000D-01
 0.0000D-01 1.0000D 00 0.0000D-01 0 0000D-01 0 0000D-01 1 0000D 00 0 0000D-01
 0.0000D-01 0.0000D-01 1.0000D 00 0 0000D-01 0 0000D-01 0 0000D-01 1 0000D 00
 0 0000D-01 0.0000D-01 0.0000D-01 1 0000D 00 0 0000D-01 0 0000D-01 0 0000D-01
 1.0000D 00 0.0000D-01 0.0000D-01 0 0000D-01 1 0000D 00 0 0000D-01 0 0000D-01
 0.0000D-01 1.0000D 00 0 0000D-01 0 0000D-01 0 0000D-01 1 0000D 00
 0 0000D-01 0.0000D-01 0 0000D-01 0 0000D-01 1 0000D 00 0 0000D-01 0 0000D-01
 0 0000D-01 1.0000D 00 0.0000D-01 0 0000D-01 0 0000D-01 1 0000D 00 0 0000D-01
 0 0000D-01 0.0000D-01 1 0000D 00 0 0000D-01 0 0000D-01 1 0000D 00
 0 0000D-01 0 0000D-01 0 0000D-01 1 0000D 00 0 0000D-01 0 0000D-01 0 0000D-01
 1 0000D 00 0 0000D-01 0 0000D-01 0 0000D-01 1 0000D 00 0 0000D-01 0 0000D-01
 0 0000D-01 1.0000D 00 0 0000D-01 0 0000D-01 0 0000D-01 1 0000D 00 0 0000D-01
 0 0000D-01 0 0000D-01 1 0000D 00 0 0000D-01 0 0000D-01 1 0000D 00
 0 0000D-01 0 0000D-01 0 0000D-01 1 0000D 00 0 0000D-01 0 0000D-01 0 0000D-01
 1 0000D 00 0 0000D-01 0 0000D-01 0 0000D-01 1 0000D 00 0 0000D-01 0 0000D-01
 0 0000D-01 1.0000D 00 0 0000D-01 0 0000D-01 0 0000D-01 1 0000D 00
 0 0000D-01 0 0000D-01 0.0000D-01 0 0000D-01 1 0000D 00 0 0000D-01 0 0000D-01
```

```
 0.0000D-01 1.0000D 00 0 0000D-01 0 0000D-01 0 0000D-01 : 0000D 00 0 0000D-01
 0 0000D-01 0.0000D-01 1 0000D 00 0 0000D-01 0 0000D-01 0 0000D-01 : 0000D 00
 0.0000D-01 0.0000D-01 0 0000D-01 1 0000D 00 0 0000D-01 0 0000D-01 0 0000D-01
 1.0000D 00 0 0000D-01 0 0000D-01 0 0000D-01 1 0000D 00 0 0000D-01 0 0000D-01
 0.0000D-01 1.0000D 00 0.0000D-01 0 0000D-01 0 0000D-01 : 0000D 00 0 0000D-01
 0.0000D-01 0.0000D-01 1.0000D 00 0 0000D-01 0 0000D-01 0 0000D-01 : 0000D 00
 0 0000D-01 0.0000D-01 0.0000D-01 1 0000D 00 0 0000D-01 0 0000D-01 0 0000D-01
 1 0000D 00 0.0000D-01 0 0000D-01 0 0000D-01 1 0000D 00 0 0000D-01 0 0000D-01
 0.0000D-01 1.0000D 00 0.0000D-01 0 0000D-01 0 0000D-01 : 0000D 00
 0.0000D-01 1 5000D 00 3 3595D 00 1 3826D 00 1 0000D 00-1 7922D-01 0 0000D-01
-6 2225D 00 9.7033D-01-2 4656D-01-9 1544D-01 8 0735D 00 9 3212D-01-2 9664D-01
 1 7156D-01 4.6423D 00 8 9972D-01-2 4447D-01 7 1681D-01-9 9:05D-01 8 7968D-01
-1.8116D-01 6.2316D-01 3 5822D 00 8 6437D-01-9 1491D-02 : 0:53D 00 9 9760D 00
 8.6515D-01 1 3294D-01 2.3470D 00-6 3879D 01 8 7936D-01-6 8672D-02-5 5915D 00
 7 5402D 02 8.7947D-01 2 5069D-01 2 2647D 01-2 0607D 03 8 8483D-01 3 5352D-01
-9 4402D 00-1.0866D 03 8.8698D-01 2 6276D-01-1 6922D 01 : 2254D 03 8 9036D-01
 1.6405D-01 6.6647D 00 4.2165D 03 9 0080D-01 1 1574D 00 9 1770D 01-2 45:7D 04
 9 1104D-01 1.0940D 00-1 0738D 02 2 5645D 04 9 3120D-01 2 5318D 00 2 9203D 02
-1.2169D 04 9.6042D-01 4.5069D 00 1 9290D 02-2 4437D 04 : 0000D 00
 0.0000D-01 1.5000D 00 7 149'D 00 3 9962D-01 1 0000D 00-5 1293D-03 0 0000D-01
 1 7502D 00 1.0002D 00 1 3811D-02 2 5748D-01-1 05:1D-01 : 0043D 00 4 7524D-02
 2 4333D-01 1 1858D 01 1 0148D 00 1 5790D-01 : 6361D 00-2 9260D 01 : 0329D 00
 1.8187D-01-1.1287D 00 7 0336D 01 1 0614D 00 4 7966D-01 6 5700D 00-3 6443D 01
 1.1695D 00 1.0320D 00 1 7050D 00 1 5170D 02 1 3505D 00 2 4:53D 00 2 0558D 01
-1.2105D 03 1.4538D 00 2 3363D 00-2 4777D 01 7 1    03 : 4916D 00 2 8188D 00
 8.6740D 01-3.9041D 04 1.5110D 00 2 4905D 00-1 82v8D 02 9 6:26D 03 : 53v6D 00
 7 6661D-01 2.9432D 00-2.4158D 04 1 5196D 00-4 0941D 00-4 8462D 02-5 6607D 04
 1.4653D 00-9.8993D 00-9.4444D 02 7 7178D 04 1 2452D 00-1 5247D 01 2 5758D 02
-5.9637D 04 1.1242D 00-1 5127D 01-2 2821D 02 2 8911D 04 1 0000D 00
```

```
 RETRIEVAL FILE HO  TP4-05-4
       FILE SIZE =   15
       L/D       =    0.5000
       ALFA      =    1.1250
 0.00000D-01 2.92640D-01 5.00000D-01 7.11490D-01 8.10370D-01 8.67010D-01 8.87240D-01
 9.03350D-01 9.17700D-01 9.39770D-01 9.48670D-01 9.69210D-01 9.84910D-01 9.92110D-01
 1.00000D 00
 1.00000D 00 0.00000D-01 1.01820D-01 1.31960 00 1.00000 00-1.22030 00 0.00000D-01
 7.92740 00 6.76000D-01-8.80870D-01 2.31990 00-9.61680 00 5.28930D-01-6.06570D-01
 3.25750D-01 4.60840 00 4.15190D-01-4.34620D-01 1 30040 00 4.85180 01 3.86390D-01
-6.88280D-02 6.09800 00 1.15360 02 3 95770D-01 4.61530D-01 1.26310 01 1.19050 03
 4 09330D-01 9.60800D-01 3.67190 01-1.81420 03 4.28310D-01 1 31690 00 7.49670 00
 3.31070 03 4.49620D-01 1.76560 00 5.50200 01 2.29240 02 5 02380D-01 3.03540 00
 6.00780 01 4.45030 03 5.32320D-01 3.74700 00 9.97190 01 1.88390 03 6.33030D-01
 6.19250 00 1.38410 02 2.62300 04 7 64270D-01 1.16000 01 5 50310 02 9.24160 03
 8.62500D-01 1.57970 01 6.16770 02-7 81350 04 1 00000 00
 0.00000D-01 0.00000D-01 0.00000D-01 0 00000D-01 1.00000 00 0 00000D-01 0.00000D-01
 0.00000D-01 1.00000 00 0 00000D-01 0.00000D-01 0.00000D-01 1 00000 00 0.00000D-01
 0.00000D-01 0.00000D-01 1.00000 00 0.00000D-01 0.00000D-01 0 00000D-01 1.00000 00
 0.00000D-01 0.00000D-01 0 00000D-01 1 00000 00 0.00000D-01 0 00000D-01 0.00000D-01
 1.00000 00 0.00000D-01 0.00000D-01 0.00000D-01 1 00000 00 0 00000D-01 0.00000D-01
 0 00000D-01 1.00000 00 0.00000D-01 0 00000D-01 0 00000D-01 1 00000 00 0.00000D-01
 0.00000D-01 0.00000D-01 1.00000 00 0 00000D-01 0.00000D-01 0 00000D-01 1.00000 00
 0.00000D-01 0.00000D-01 0.00000D-01 1.00000 00 0.00000D-01 0.00000D-01 0.00000D-01
 1.00000 00 0.00000D-01 0.00000D-01 0.00000D-01 1 00000 00
 0.00000D-01 5.00000D-01 3.40470 01 9.78370 00 1 00000 00 1.30370 00 0.00000D-01
-4.95120 00 1.36080 00 1.09170 00-1 44890 00 3.40400 00 1 56110 00 8 64420D-01
-7.43080D-01-2.60020 01 1.68630 00 1.25760D-01-6 24220 00-9.38000 01 1.65310 00
-9.50090D-01-1.55180 01-2.11110 02 1.56800 00-2.16750 00-2 74740 01 5.49390 02
 1.51930 00-2.61090 00-1.63570 01-2.31400 03 1 47350 00-3.17450 00-5.36290 01
 2.19240 03 1.42350 00-3.71850 00-2 21590 01-9 87820 02 1 33430 00-4 44790 00
-4.39550 01-9.04370 02 1 29280 00-4 87530 00-5 20100 01 3 09370 03 1 18620 00
-5.29100 00 1.15310 01-6.65100 03 1.10020 00-5 96900 00-9 29110 01-2 84300 03
 1.05500 00-6.67160 00-1.13360 02 1 43600 04 1 00000 00
 0.00000D-01 0.00000D-01 4.02410 00 2 58930 00 1 00000 00 4 77010D-01 0 00000D-01
-1.43440 00 1.13360 00 4 15590D-01-4 19780D-01 3 53220 00 1 21600 00 4 04400D-01
 3.12670D-01 2 26050 00 1.31210 00 5 21160D-01 7 90740D-01 2 49470 00 1 36790 00
 6.11550D-01 1.03740 00-2.64820 01 1 40340 00 6.27630D-01-4 62530D-01-4 55010 00
 1.41600 00 6.17540D-01-5 54580D-01-2 53390 02 1 42370 00 5 75720D-01-4 63670 00
 4.38150 02 1.43370 00 5.54300D-01 1 65070 00-1 80580 03 1 44310 00 1 50940D-01
-3.82030 01 1.59130 04 1.44480 00 4 41150D-01 1 03420 02-2 47030 04 1 44000 00
-2.64550 00-4.03970 02 1.44520 04 1 35800 00-7 20660 00-1 77070 02-5 54960 05
 1.26700 00-2.28660 01-4 17280 03 5 28870 05 1 00000 00
 0.00000D-01 0.00000D-01 1.27710 00 6 46530D-01 1 00000 00 6 79190D-01 0 00000D-01
-1.25900 00 1.19350 00 6.25280D-01-3 68420D-01 4 88680 00 1 32250 00 6 53950D-01
 6.44900D-01 3.40840 00 1.48060 00 8 66570D-01 1 36570 00-2 73510 01 1 56920 00
 8.87450D-01-9.43230D-01-1.53620 02 1 61230 00 5 87610D-01-9 64450 00 1.34930 02
 1.62340 00 4.20110D-01-6.91490 00 2 48170 03 1 63100 00 6 30750D-01 3.30650 01
-4.98600 03 1.64100 00 5.91860D-01-3 84850 01-1 78030 03 1 64150 00-6.91070D-01
-7.77750 01-1.50580 04 1.63050 00-1 97960 00-2 11790 02 1 06440 03 1 54670 00
-6.10520 00-1.89920 02-1.04560 05 1 36000 00-2.19740 01-1 83160 03 3 87170 05
 1.17840 00-2.51250 01 9.56100 02-1 21180 05 1 00000 00
 0.00000D-01 1.50000 00 1 35230 01 1 39220 00 1 00000 00-6 69320D-02 0 00000D-01
-1.18760 00 9.75450D-01-1.17780D-01-3 47540D-01-1 49430D-01 9 47340D-01-1 93060D-01
```


Best Available Copy

```
-3.78520-01  5.92290-01  8.94970-01-2.59870-01-2.53260-01  :  93960 01  8.71160-01
-1.90090-01  1.66470 00  1.10310 02  8.66410-01  9.10960-02  7.91210 00-9.15690 02
 8.68400-01  5.37460-02-1.06160 01  1.01480 03  8.68600-01  :  .44040-02  5.73060 00
-1.06390 02  9.69340-01  8.57010-02  4.20340 00  1.99590 02  8.72620-01  2.27030-01
 9.60730 00  1.61710 03  8.75170-01  3.67850-01  2.30120 01-2.77990 01  8.87540-01
 8.34630-01  2.24410 01  2.03170 04  9.16530-01  3.69210 00  3.41490 02-1.81220 04
 9.50780-01  5.67930 00  2.11170 02-2.67520 04  1.00000 00
 0.00000-01  1.50000 00  1.60830 01  4.04350-01  1.00000 00-1.07670-02  0.00000-01
-3.69990-02  9.96690-01-1.23510-02-1.00270-02  7.52160-01  9.95020-01  1.57410-03
 1.45140-01  4.46850 00  1.00560 00  1.33200-01  1.09020 00  6.02590 01  1.03380 00
 5.34610-01  7.04890 00  4.26900 01  1.07660 00  1.00230 00  9.44660 00  2.45320 03
 1.10220 00  1.69600 00  5.91030 01-5.73100 03  1.13320 00  :  .90450 00-3.32090 01
 7.93970 03  1.16110 00  2.24580 00  8.07600 01-3.17480 03  :  .22460 00  3.25490 00
 1.07110 01-1.40130 04  1.25240 00  2.79420 00-1.14150 02-:  .12330 04  1.26940 00
-1.91970 00-7.44870 02-1.93310 03  1.19550 00-7.57370 00-3.75230 02-1.02250 05
 1.12500 10-1.29160 01-1.11050 03  1.40690 05  1.00000 00
 0.00000-01  0.00000-01  0.00000-01  0.00000-01  :  .00000 00  0.00000-01  0.00000-01
 0.00000-01  1.00000 00  0.00000-01  0.00000-01  0.00000-01  :  .00000 00  0.00000-01
 0.00000-01  0.00000-01  1.00000 00  0.00000-01  0.00000-01  0.00000-01  :  .00000 00
 0.00000-01  0.00000-01  0.00000-01  1.00000 00  0.00000-01  0.00000-01  0.00000-01
 1.00000 00
```

```
-3.7852D-01 5.9229D-01 8.9497D-01-2 5987D-01-2.5326D-01 : 9396D 01 8 7116D-01
-1.9009D-01 1.6647D 00 1.1031D 02 8 6641D-01 8 1096D-02 7 9121D 00-9 1569D 02
 8.6840D-01 5.3746D-02-1.0616D 01 1 0148D 03 8 6860D-01 : 4404D-02 5 7306D 00
-1.0639D 02 8.6934D-01 8.5701D-02 4 2034D 00 1.9959D 02 8 7262D-01 2 2703D-01
 8.6073D 00 1.6171D 03 8.7517D-01 3 6785D-01 2 3012D 01-2 7799D 01 8 8754D-01
 8.3463D-01 2.2441D 01 2.0317D 04 9 1653D-01 3 6921D 00 3 4149D 02-1 8122D 04
 9.5078D-01 5.6793D 00 2.1117D 02-2 6752D 04 1 0000D 00
 0.0000D-01 1.5000D 00 1.6083D 01 4 0435D-01 1 0000D 00-1 0767D-02 0 0000D-01
-3.6999D-02 9.9669D-01-1.2351D-02-1 0827D-02 7.5216D-01 9 9502D-01 : 5741D-03
 1.4514D-01 4.4685D 00 1.0056D 00 1 3220D-01 1 0902D 00 6 0259D 01 1 0338D 00
 5.3461D-01 7.0489D 00 4.2690D 01 1 0766D 00 1 0023D 00 9 4666D 00 2 4532D 03
 1.1022D 00 1.6960D 00 5.9103D 01-5 7310D 03 1 1332D 00 . 9045D 00-3 3208D 01
 7.9397D 03 1.1611D 00 2.2458D 00 8 0760D 01-3.1748D 03 : 2246D 00 3 2549D 00
 1.0711D 01-1.4018D 04 1.2524D 00 2 7942D 00-1 1415D 02-1 1233D 04 1 2694D 00
-1.9197D 00-3.4487D 02-1.9331D 03 1 1955D 00-7 5737D 00-3 7523D 02-1 0225D 05
 1.1250D 00-1.2916D 01-1.1185D 03 1 4069D 05 1 0000D 00
```

```
..TPIEVAL FILE NO  TP4-10-1
      FILE SIZE =   26
      L/O       =    0 5000
      ALPH      =    1 1250
 3 6.0000-01  1 .9531D-01  1 5.4790-01  2 6.8L-(-01  . 37.11-"1  2 .9941[.+  2 +.0"5-0
 4 1.1740-01  5 2.2400-01  5 7.5530-01  6 2.7110-01  7 2 1.(-+.1  ' +.7E1D-01  9 .0.145-0
 ' 5.6251-01  > 7.9210-01  9 8.0750-01  9 1.457D-01  4 2.4551-01  4 3 4.0-.-0'  9 4'.'5-0'
 . 5.5+0-01  9 6.8560-01  9 6.2240-0.  9 A.+"D-.1  1 .6.501 07
   5.000[ 00  4 0.0000-01  5 2.9590-01  1 7.1130 00  1 .0.01[ 00  2 4.2-.-0 .0  0 0.,.0-0.
 - 1 5.3030 02  1 1.9130 00  5 1.190D-01-3 7.1770 01  2 1.7965 0.  1 1.7250 00-.  0.+905 00
 - ' 6.1200 01  6 6.9850 01  1 6.0970 00-1 7.7230 00-1 6.8321[ 01  2 5.2750 02  9 9.1040-01
-2 3.4650 00  4 6.742.-01  9 5.6610 01  8 7.7330 01-2 .0.966 00  5 3.1700 01  6 4.6510 01
 ' 6.6481 01-1 6.7030 00  8 7.1930 00-1 6.7340 .2  6 0.1.+[.+.'-1 5.0200 01  3 1.3990 00
 ' 1.1420 01  5 3.9850-01-9 9.7370-01  6 6.4320 00-4 6.7660 0.  4 .0.7.0-0'-6 9.1400-0
 ; 4.3870 00  1 6.5130 01  4 6.6390-01-4 3.6430-01  5 7.5341 00  2 1.+ 0 00  4 5.0050-01
 1 9.1930-01  6 6.3140 00  1 9.2960 01  4 5.9.60-01  3 7.2010-01  6 9.41'[ 00  6  2.45 0.
 4 9.2670-01  8 4.4990-01  1 6.2610 01-6 2.1140 01  5 2.4071 01  . 1.3750 00  8 3.0720 00
 3 7.1540 02  5 6.1430-01  1 5.2670 00  1 8.9250 01-2 2.0280 02  6 6.2.50-01  ' 8.0.90 00
 1 1.2040 01  1 3.0470 03  6 2.5210-01  2 6.9790 00  2 5.6511 0'  . 6.2510 02  6 4.7.60-01
   4.5270 00  4 4.9470 01-4 7.7540 03  6 7.9650-0.  2 6.6.41 1.  6 .0.7.0 00  5 6.1.10 02
 . 4.1.1-01  2 5.7.60 00  6 6.1240 01  3 4.5.0 02  7 4.1240-01  3 5.6.70 00  5 .6.01 0
   6.930 03  7 8.8320-01  4 2.0860 00  6 4.7030 01  1 6.7701 04  8 5.7560-01  6 .7.70 00
 2 1.1900 02  2 6.3570 03  9 2.3930-01  8 2.4600 00  2 7.6110 02-2 7.9.20 0.  1 0.000 00
   6.000-01  0 0.000-01  0 0.000-01  0 0.000-01  1 0.000 00  0 0.000-0.  0 0.0-0-01
 . 0.000-01  1 0.000 00  0 0.000-01  0 0.000-01  0 0.000-01  1 0.000 00  0 0.000-01
 . 0.000-01  0 0.000-01  1 0.000 00  0 0.000-01  0 0.000-01  0 0.000-01  1 0.000 00
 9 0.000-01  0 0.000-01  0.0.000-01  1 0.000 00  0 0.000-01  0 0.000-01  0 0.000-01
   0.000 00  0 0.000-01  0 0.000-01  0 0.000-01  1 0.000 00  0 0.000-01  0 0.000-01
 . 0.1.1-01  1 0.000 00  0 0.000-01  0 0.000-01  0 0.000-01  1 0.000 00  0 0.0.0-01
 : 0.000-01  0 0.000-01  1 0.000 00  0 0.000-01  0 0.000-01  0 0.000-01  . 0.000 00
 3 0.000-01  0 0.000-01  0 0.000-01  1 0.000 00  0 0.000-01  0 0.000-01  0 0.000-01
 : 0.000-01  2 0 0.000-01  0 0.000-01  0 0.000-01  1 0.000 00  0 0.000-01  0 0.000-01
 . 0.000-01  1 0.000 00  0 0.000-01  0 0.000-01  0 0.000-01  1 0.000 00  0 0.000-01
 ' 0.000-01  0 0.000-01  1 0.000 00  0 0.000-01  0 0.000-01  0 0.000-01  1 0.000 00
 ) 0.000-01  0 0.000-01  0 0.000-01  1 0.000 00  0 0.000-01  0 0.000-01  0 0.0.0-01
 : 0.000 00  0 0.000-01  0 0.000-01  0 0.000-01  1 0.000 00  0 0.000-01  0 0.000-01
 6 0.000-01  1 0.000 00  0.0.000-01  0 0.000-01  0 0.000-01  1 0.000 00  0 0.000-01
 ' 0.000-01  0 0.000-01  1 0.000 00  0 0.000-01  0 0.000-01  0 0.000-01  . 0.000 00
   0.000-01  5 0.000-01  1.7594D 01  9 4.7610 00  1 0.000[ 00  1 2.4230 00  0 0.000-01
 . 5.520 01  1 1.2230 00  1 0.446D 00-3 7.5450 00  5 5.1780 01  1 1.767D 00  9 2.1950-01
 . 4.190-01-1 2.3590 01  1 2.201D 00  8 7.1440-01-1 3.4430 00  2 4.3720 00  1 2.130 01
 9 6.420-01-1 2.2530 00-2 6.053D 00  1 3.011D 00  7 4.2.00-01-1 3.5900 00  1 5.839[ 01
   1.870 00  6 9.2520-01-5 2.542D-01-2 9.955D 01  1 3.731D 00  6 2.535D-01-2 0.737D 00
 . 1.047D 00  1 4.301D 00  4 2.281D-01-1 6.203D 00-2 5.7.40 01  . 4.4960 00  3 0.074D-01
 1 4.9.20 00-3 2.590D 00  1 4.611D 00  1 4.200-01-3 1.589D 00-2 4.3960 01  . 4.5680 00
   .0.40-01-5 5.229D 00-5 2.293D 01  1 4.400D 00-5 4.713D-01-7 7.720 00  7 7.757D 00
 . 3.961D 00-9 6.209D-01-7 2.871D 00-4 0.859D 02  1 3.620D 00-1 3.946D 00-2 0.163D 01
   1.399D 00  1 3.164D 00-1.7.161D 00-2 3.241D 00-1 5.478D 03  1 2.707D 00-2 2.2.9D 00
 . 9.640D 01  2 8.068D 03  1 2.439D 00-2 4.900D 00-8 1.300D 00  5 4.4.9D 03  1 2.195D 00
 1 .0.80[ 00  4 6.439D 01-1 8.031D 04  1 1.990D 00-2 5.7.[D 00-1 1.227D 02  1 6.0.5 04
 . 1.744D 00-2 9.622D 00  2 4.939D 01-4 2.553D 03  1 1.1.5D 00-3 0.52.D 00-3 7.240D 01
 7 5.020D 03  1 6.944D 00-2 9.593D 00  5 2.71.D 01-6 6.228D 03  1 0.56.D 00-2 8.574D 00
-3 7.799D 01  2 4.472D 02  1 6.281D 00-3 1.958D 00-3 5.541D 01  4 1.665D 03  1 6.000 00
 A 3.000-01  0 0.000-01  6 3.667D 00  2 9.601D 00  1 0.000 00  7 8.283D-01  0 0.000-01
```

```
-2.7149D 01 1 0772D 00 6.3229D-01-2 8590D 00 3 9044D 00 1 1075D 00 4 8231D-01
-2.6463D 00 4.8425D 01 1 1486D 00 4 1099D-01-3 0877D-01-9 6901D 00 1 1432D 00
 3.8419D-01-7.8399D-01 1.4217D 01 1 1672D 00 3 6268D-01-5 4300D-02-1 4599D 01
 1 1858D 00 3 3962D-01-8 2203D-01 2 4588D 01 1 2029D 00 3 2998D-01 4 4885D-01
-4 2392D 00 1.2408D 00 3.5371D-01-1 6011D-02 7 2487D 00 1 2598D 00 3 6309D-01
 3.6909D-01-2.2432D 00 1 2790D 00 3 7919D-01 2 5299D-01 2 4931D 00 1 3163D 00
 4 1426D-01 4 8878D-01-1 5026D 00 1 3341D 00 4 3245D-01 4 2573D-01-3 9960D 01
 1 3576D 00 3.9587D-01-1 7846D 00 1 1678D 02 1 3698D 00 3 9762D-01 1 8957D 00
-3.7331D 02 1 3805D 00 2 9926D-01-8 7769D 00 3 1840D 02 1 3859D 00 2 8019D-01
-1 1009D 00-7.9959D 02 1.3877D 00 1 1745D-01-1 0077D 01-3 0046D 03 1 3879D 00
-1 3452D-01-4 0195D 01 4 1047D 03 1 3856D 00-3 2931D-01-4 0647D 00-3 5625D 02
 1.3826D 00-3.7726D-01-7 1196D 00-8 9277D 03 1 3717D 00-1 4344D 00-1 3757D 02
 2 9339D 04 1 3530D 00-9.1492D-01 2 1421D 02-1 0590D 05 1 3146D 00-7 9271D 00
-1 2331D 03 8 0325D 03 1 1900D 00-1 8973D 01-1 1599D 03 1 3587D 05 1 0000D 00
 1.0000D 00-5 0000D-01 1.6721D 00 4 0618D 00 1 0000D 00-2 5325D 00 0 0000D-01
 6.8559D 01 7 4022D-01-2.2134D 00 7 2199D 00-1 3667D 02 6 2666D-01-2 0229D 00
-2 2665D-01 2 5018D 02 5.3344D-01-1 7423D 00 1 1650D 01-1 7648D 02 4 5877D-01
-1 3734D 00 3 1952D 00 3.8459D 01 3 9336D-01-1 1588D 00 5 1690D 00-0 6289D 00
 3.3933D-01-8 9871D-01 4.7149D 00-3 4446D 01 2 9838D-01-7 0102D-01 2 9345D 00
-2 8515D 00 2 3853D-01-3 9638D-01 2 6218D 00 3 8155D-01 1 2118D-01-2 5655D-01
 2 6421D 00 8 9830-01 2 1147D-01-1 2100D-01 2 5955D 00 8 1384D 00 2 1274D-01
 1 6114D-01 3 3709D 00 3 3734D 01 2 2288D-01 3 3228D-01 4 7864D 00 1 4246D 01
 2 4899D-01 6 1901D-01 5 5010D 00 2 4977D 02 2 7257D-01 9 1892D-01 1 3452D 01
-2 8625D 02 3 0722D-01 1 1865D 00 5 2687D 00 1 1042D 03 7 3594D-01 1 6344D 00
 3 1888D 01 2 9081D 03 3 5698D-01 2 1757D 00 6 4575D 01 1 2995D 02 3 8205D-0.
 2 8291D 00 6 5838D 01-2 7337D 03 4 0920D-01 3 3027D 00 4 1775D 01 1 1643D 03
 4 3918D-01 3.7039D 00 5 1802D 01 3 4871D 03 5 0324D-01 5 3669D 00 1 7502D 02
-3 3004D 04 5 7075D-01 5 1026D 00-1 1991D 02 9 3732D 04 6 5082D-01 1 0850D 01
 1 0611D 03-9 6220D 03 8 0384D-01  0231D 01 9 7229D 02-1 1398D 05 1 0000D 00
 1 5000D 00 1 5000D 00 2.6750D 00 1 2448D 00 1 0000D 00-1 7876D 00 0 0000D-01
 1 2841D 02 8 3674D 01-1 0756D 00 1 3522D 01 1 2174D 02 8 0149D-01-1 5823D-01
 2.0155D 01-4 7971D 02 8 0834D-01 2 5577D-01-3 0010D 00 8 1587D 01 8 1849D-01
 2 0671D-01 1.0006D 00-6 0642D 01 8 2944D-01 1 7621D-01-2 1.5D 00 1 0342D 02
 8 4036D-01 3.2172D-01 7 5662D 00-2 5535D 02 8 6122D-01 3 7.64D-01-5 6D2.D 00
 8 3118D 01 8 8638D-01 2 5377D-01 3 4820D 00-3 6702D 01 9 0237D-01 3 0205D-01
-1 6345D 00 4 9199D 01 9 1699D-01 2 8414D-01 9 1.53I-01-6 5703D 00 9 4702D-01
 3 4114D-01 2 9331D-01-2 7056D 01 9 8124D-01 7 2546D-01-8 4137D-01 1 2407D 02
 9 8171D-01 4 7296D-01 6 0220D 00-7 2924D 02 9 3580D-01 3 0914D-01-1 6956D 0.
 1 2409D 03 1 0023D 00 3 2307D-01 1 8522D 01-3 7120D 02 1 0.32D 00 4 8604D-01
-4 8347D 00-1 4952D 03 1 3102D 00 3 2754-01-2 .7110 01 4 2.10D 03 1 002.0D 00
 3 3143D-01 2 0525D 01-7 1431D 03 1 0239D 00 2 3547D-01-4 233-D 0. 4 429 E 07
 1 0248D 00 4 3023D-02-2 5770D 00-5 8288D 02 1 0249D 00-5 7947D-02-1 1099E 0.
-2 1562D 03 1 0229D 00-3 450.D-01-7 0351D 01 1 7869D 03 . 0.54D 00-6 0230-0.
-1 2506D 01-2 0229D 03 1 0083D 00-8 8434D-01-2 1.77 0  3 695D 03 . 00000 00
 0 0000D-01 1 5903D 00 3 2453D 00 4 6061E-01 1 0006 00-2 6989D-2  0 0604E-6
 3 7979D 01 3 7930-01-3 0206D-02 2 3402D 00-4 3.70E 00 3 8.2E-01 . 0.1.D-0
 2 7499D 00-1 7215D 01 3 0482D-01 3 .18.D-01 2 9168D 00 4 6230D 00 1 0.42D 00
 7 7057D-01 3 1436D 00-2 1625D 01 1 0420D 00 4 0710D-01 2 0213D 00 5 4942D 01
 1.0780D 00 7 9255D-01 5 1733D 00-3 5254D 01 1 1279D 00 3 4414D-01 7 6296D-01
 3 4717D 01 1 2? 9D 00 1 2392D 00 4 5757D 00-3 7711 01 1 3717D 00 1 4249D 00
 2 5721D 00 3 0218D 01 1 3894D 00 1 6027D 00 4 .956D 00-. 3.50D 0. 1 5547D 00
 1 9078D 00 2 3156D 00-1 4613D 02 1 4370D 00 1 8740D 00-3 8149D 00 1 9932D 0.
 1.7355D 00 1 6957D 00-2 7139D 00-2 0291D 03 1 7771D 00 4 0?83D-01-4 6375D 01
 2 3878D 03 1 7740D 00-3 1476D-01 1 8332D 00-4 7536D 03 . 7579D 00-2 2318D 00
```

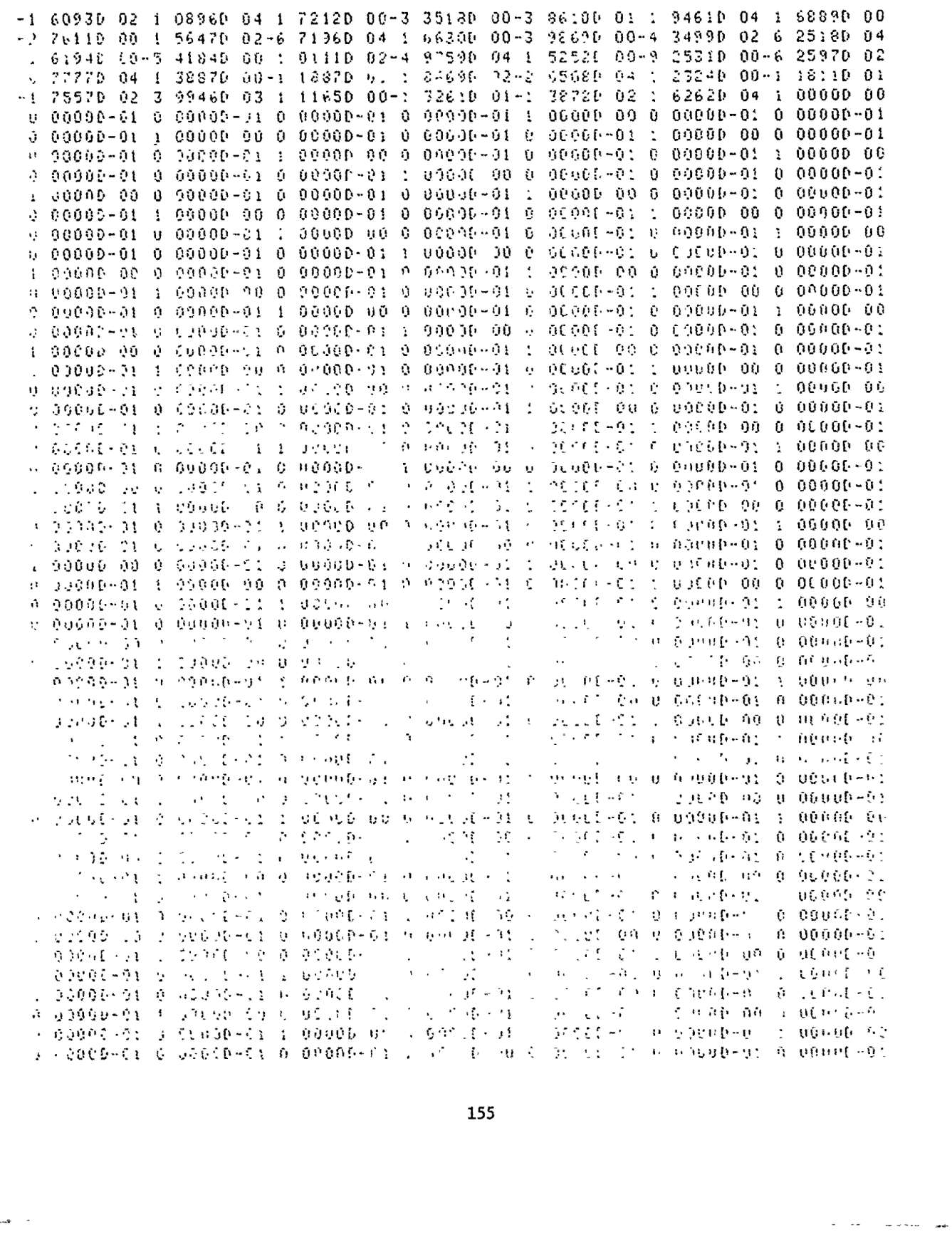

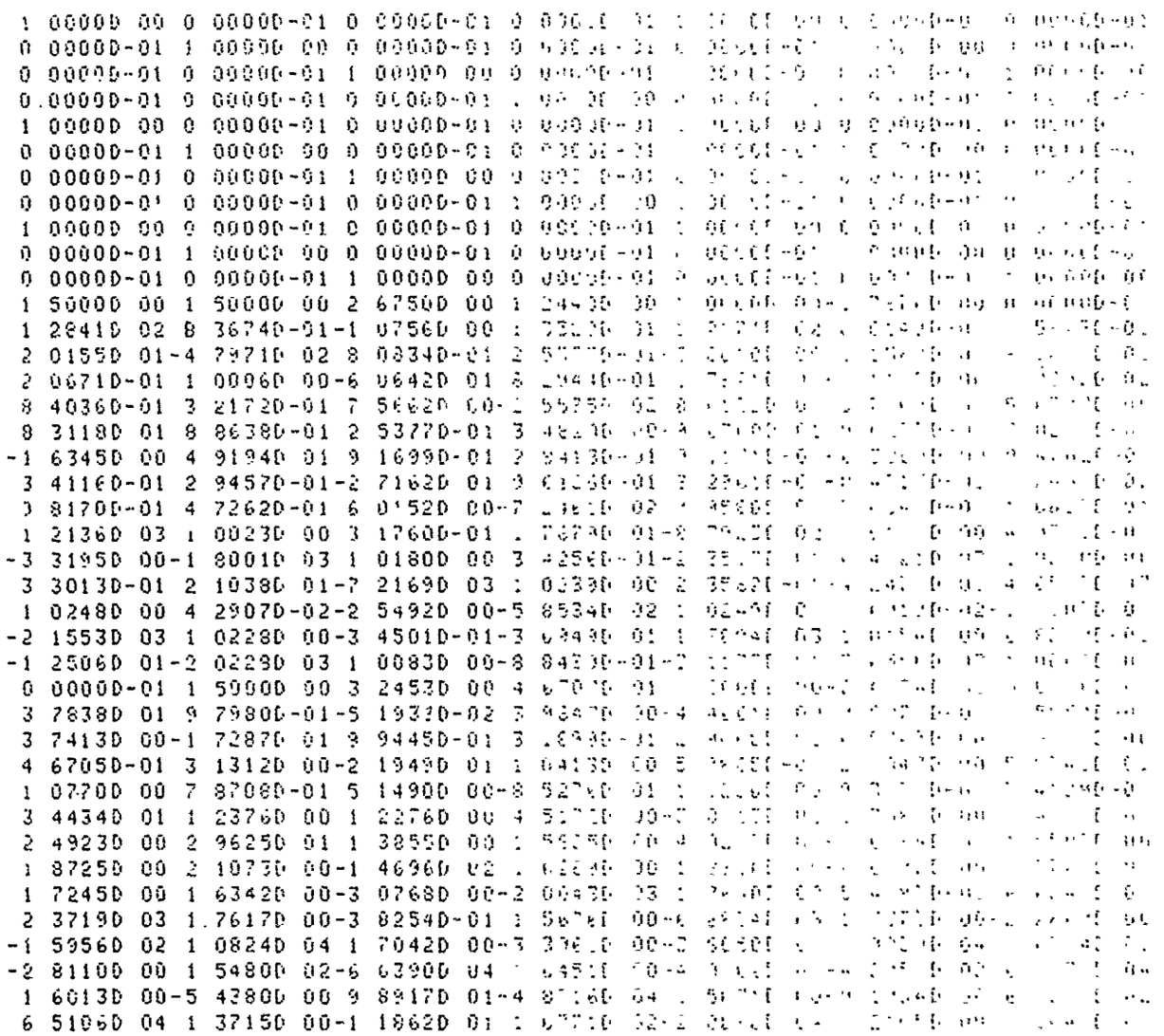

```
RETRIEVAL FILE NO  TP4-10-2
      FILE SIZE =   20
      L/D       =    0 5000
      ALFA      =    1 1250
 0 0000D-01 1 0724D-01 2 2129D-01 3 2137D-01 4 9059D-01 5 6352D-01 6 7890D-01
 7 4957D-01 8 1695D-01 8 6153D-01 8 8293D-01 9 0272D-01 9 1145D-01 9 2711D-01
 9 4128D-01 9 5329D-01 9 7226D-01 9 8549D-01 9 9223D-01 1 0000D 00
 1 0000D 00 0 0000D-01 3 2126D-01 [illegible] 00 1 0000D 00-2 1456D 00 0 0000D-01
 2 6294D 01 3 3764D-01-1 6492D 01 9 [illegible] 00-3 7870D 0 [illegible] 5076D-01-8 4916D-01
 4 4357D 00-4 3062D 01 5 9762D-01-[illegible] [illegible]-01 6 2734D-01-1 6774D-01 4 3756D-01
-4 5014D-01 5 9995D-01-4 9575D 00 4 6542D-01-4 2764D-01 2 3741D-01 6 5807D 01
 4 3451D-01 3 7803D-02 7 8304D 00-1 1484D 02 4 4998D-01 3 0442D-01-2 8505D-01
 1 1699D 02 4 7263D-01 5 0712D-01 6 3897D 00 1 2716D 02 5 0984D-01 1 0102D 00
   3721D 01-2 6903D 02 5 3433D-01 1 2554D 00 8 9490D 00 1 0478D 03 5 6227D-01
   6359D 00 2 9594D 01 1 8060D 02 5 7769D-01 1 9010D 00 7 1169D 01-6 5319D 02
 1 1086D-01 2 3090D 00 2 0940D 01 2 2467D 03 6 4676D-01 2 8335D 00 5 3090D 01
 7 2561D 02 6 6487D-01 3 5309D 00 6 3007D 01 2 0559D 03 7 6552D-01 5 0959D 00
 1 0000D 02 1 6036D 04 8 4881D-01 8 0745D 00 3 4083D 02 6 2577D 03 9 1102D-01
 1 0466D 01 7 8304D 02-4 9321D 04 1 0000D 00
 0 0000D-01 0 0000D-01 0 0000D-01 1 0000D-01 1 0000D 00 0 0000D-01 0 0000D-01
 0 0000D-01 1 0000D 00 0 0000D-01 0 0000D-01 0 0000D-01 1 0000D 00 0 0000D-01
 0 0000D-01 0 0000D-01 1 0000D 00 0 0000D-01 0 0000D-01 0 0000D-01 1 0000D 00
 0 0000D-01 0 0000D-01 0 0000D-01 1 0000D 00 0 0000D-01 0 0000D-01 0 0000D-01
 1 0000D 00 0 0000D-01 0 0000D-01 0 0000D-01 1 0000D 00 0 0000D-01 0 0000D-01
 0 0000D-01 1 0000D 00 0 0000D-01 0 0000D-01 0 0000D-01 1 0000D 00 0 0000D-01
 0 0000D-01 0 0000D-01 1 0000D 00 0 0000D-01 0 0000D-01 0 0000D-01 1 0000D 00
 0 0000D-01 0 0000D-01 0 0000D-01 1 0000D 00 0 0000D-01 0 0000D-01 0 0000D-01
 1 0000D 00 0 0000D-01 0 0000D-01 0 0000D-01 1 0000D 00 0 0000D-01 0 0000D-01
 0 0000D-01 1 0000D 00 0 0000D-01 0 0000D-01 0 0000D-01 1 0000D 00 0 0000D-01
 0 0000D-01 0 0000D-01 1 0000D 00 0 0000D-01 0 0000D-01 0 0000D-01 1 0000D 00
 0 0000D-01 0 0000D-01 0 0000D-01 1 0000D 00
 0 0000D-01 5 0000D-01 2.1741D 01 9 0799D 00 1 0000D 00 1 3453D 00 0 0000D-01
-3 0774D 01 1 1379D 00 1.1683D 00-3 3003D 00 1 8281D 01 1 2543D 00 9 1082D-01
-1 2153D 00-1 6525D 00 1 3790D 00 7 8096D-01-1 3807D 00-1 5221D 00 1 4502D 00
 5 2547D-01-1 6383D 00-2 5807D 01 1 4825D 00 3 3737D-01-3 5203D 00 2 7931D 01
 1 5051D 00 1 1711D-01-2 9757D-01-1 8263D 02 1 5067D 00-1 5383D-01-7 5116D 00
-5 0234D 01 1 4808D 00-7 1453D-01-1 0595D 01-2 2126D 01 1 4307D 00-1 2787D 00
-1 1714D 01-1 0170D 03 1 3990D 00-1 7621D 00-3 3472D 01 1 3846D 03 1 3593D 00
-2 1534D 00-6 0582D 00-7 4257D 01 1 3403D 00-2 2091D 00-6 7060D 00-2 9482D 03
 1 7030D 00-2 6756D 00-5 2876D 01 2 5287D 03 1 2609D 00-3 1710D 00-1 7042D 01
 3 4170D 03 1 2226D 00-3 1292D 00 2 4006D 01-9 9211D 03 1 1563D 00-4 4586D 00
-1 6418D 02 1 1536D 04 1 0874D 00-5 6212D 00-1 1604D 01-1 2998D 04 1 0486D 00
-5 9952D 00-9.9286D 01 1 2784D 04 1 0000D 00
 0 0000D-01 0 0000D-01 5 6487D 00 2 5111D 00 1 0000D 00 8 3180D-01 0 0000D-01
-9 2777D 00 1 0873D 00.7.7844D-01-9 9496D-01 6 8767D 00 1 1713D 00 7 0969D-01
-2 1067D-01 3 2344D 00 1 2418D 00 7 0480D-01 1 1290D-01-1 0514D-01 1 3626D 00
 7 2241D-01 9 5104D-02-1 2112D 01 1 4148D 00 6 9713D-01-7 8819D-01-6 7212D 00
 1 4882D 00 5 6145D-01-1 5637D 00 4 2367D 01 1 5265D 00 5 5673D-01 1 4303D 00
-2 5437D 01 1 5624D 00 5.9661D-01-1 3107D-01-6 1678D 01 1 5911D 00 5 1114D-01
-7 2486D 00 2 1393D 02 1 6016D 0[illegible] [illegible]9960D-01 1 3282D 00-7 1974D 02 1 6107D 00
 7 7584D-01-1 2921D 01-9 1577D 02 1 6133D 00 2 2826D-01-2 0911D 01 3 8273D 02
 1 6146D 00-5 2273D-02-1 4917D 01 1 3574D 03 1 6130D 00-1 2737D-01 4 3182D 00
-2 1190D 04 1 6057D 00-1 6044D 00-2 5023D 02 3 9200D 04 1 5748D 00 7 0115D-01
 4 9333D 02-2 7128D 05 1 5226D 00-1 6503D 01-3 0948D 03 3 2115D 04 1 3425D 00
```

```
-3.6650D 01-2.8781D 03 3 7059D 05 1 0000D 00
 0 0000D-01 0 0000D-01 1 0209D 00 4 0578D-01 1 9[0uI f0 $ 9340D-01 0 0000D-01
-1.7281D 01 1 0929D 00 8 0003D-01-1 8532D 00 5 ~9610 00 : 1~250 00 6 2577D-01
-1.2034D 00-1.1247D 01 1.2282D 00 4 4907D-01-2 326E0 00 4 ~734D 00 : 2746D 00
 1.2133D-01-1.5441D 00 5.0395D 01 1 2826D 00 1 4273D-01 2 1712D 00-3 6541D 0.
 1.3039D 00 1.4541D-01-2.0849D 00 3 4514D 01 1 3110D 00 8 4258D-02 3 5403D-01
 2.7522D 01 1.3179D 00 1 5785D-01 2 0487D 00-1 3[76D 02 : 724~D 00 3 0000D-02
-7.0991D 00-3.1618D 02 1 3231D 00-1 9432D-01-1 3E~5[ 01 : .3[%D 03 ; 7.40D 00
-2.4728D-01 8 5129D 00-2.3955D 03 1 3159D 00-2 6~[3D-01-1 27~~D 0[-~ 0~.1D 02
 1.3096D 00-5 8132D-01-2 8095D 01-8 8812D 01 1 2965D 00-~ 6~7~D 0~-2 ~~54D 01
-1 0436D 04 1.2815D 00-2.0935D 00-1 5469D 02 4 52340 03 : 2191D 00-4 2~~0D 0[
-6 8877D 01-2.5705D 04 1 1474D 00-7 3749D 00-4 3896D 02-4 0060D 03 : 0[02D 00
-1 0222D 01-4 3596D 02 5 6108D 04 1 0000D 00
 0 0000D-01 1.5000D 00 1.6503D 00 1 3741D 00 1 0[00D 00-2 5~~1D 0[ 0 0~~0D-~[
-1 4479D 01 9.5856D-01-4 4193D-01-1 5528D 00 2 3914D 01 ~ 0~~7D-0[-4 ~0~~[ 0
 1 1746D 00 4 8251D 00 8 6429D-01-3 2184D-01 1 ~5~3D 00-1 4~[~D 01 ~ 2[~~D-0.
-2 5030D-01-8 1195D-01 5 1411D 01 8 0467D-01-1 72~0D-0[ 2 9~~[D 00-3 ~~~4D 0.
 7 9638D-01-3 9530D-02-6 2730D-01-2 8509D 00 7 3[~5D-0[-9 0~~0D-02-8 2~~7D-0.
 2 1560D 02 7 9301D-01 2 6431D-01 1 2405D 01-4 75~3D 02 8 1~99D-0[ 2 0~[[-0[
-1 1631D 01 2 6558D 03 8 1975D-01 6 4223D-01 4 5.~7D 0[-~ ~.[~.D 03 ~ ~[[~[-0.
 6 3227D-01-4 6252D 01 1 3364D 04 8 4059D-01 ~ 3734D-0[ ' ~3~~D ~[-~ _5~4D 0~
 8 5612D-01 9.4931D-01-4 3267D 01 5 8453D 03 9 ~~~0D-0[ ~ 23[5D-0[ 3 ~5~4D 0[
 9 3473D 01 8 8197D-01 1 4053D 00 4 6697D 01-2 7~00[ 03 9 .27~D-0[ [ ~7~[[ 00
-1.2035D 01 1.6161D 04 9 4015D-01 2 9316D 00 2 0172D 02-9 24~~D 03 9 ~~25D-0[
 4 1730D 00 1.6634D 02-2 1418D 04 1 0000D 00
 0 0000D-01 1 5000D 00 5 2103D 00 4 5[63D-01 [ 0[~0~ ~0-2 7455D-0. 3 ~~[[0-9
 3 9175D 00 9 9829D-01-9 2735D-04 4 ~0120-01 3 2~~7D 00 [ 0.[`D 00 ~ ~~`~-~~
 7 9520D-01 5 0712D-01 1 0126D 00 [ ~047D-0[ 8 4~~3D-0[ ~ "2~5D 00 [ ~~~0 ~~
 3 7567D-01 1 8152D 00-4 4818D 01 [ 0~42D 00 2 ~~~7D-0[-[ ~3[~D 00  [0[~D 0~
 1 1579D 00 1 2243D 00 1 5934D 01-1 8449~0 02 [ 3[34[ 00 [ ~~~`D ~~ ~ ~~~~00 00
-1 ~3[[D 01 1 3942D 00 2 0368D 00 1 ~3430 00-1 0[40D ~2  4~[5D 00 3 0~[~D 0~
-7 2343D 00-3 5421D 03 1 5338D 00 . [2[50 00-7 [[~[D ~[ ~ 72.~D 0[ [ 5~~ [ ~~
 4 0126D-01 6 4073D 00-2 5541D 02 [ 5499D 00 4 4744[-0[ ~ [~~~D 0~ [ ~ [`[[ ~~
 1 5495D 00-3 7493D-01-1 8587D 02 . 2754D 04 [ 5~[[D 00-3 3~[`D 0~~5 0~ ~[ ~[
-3 2719D 04 1 4853D 00-4 7496D 00-3 ~8[3D 02-[ 3~42D 03 . 0215D ~~ ~ ~~~~[ ~
-4 3407D 02 7 0195D 04 1 1433D 00-[ 2244D 01 4 ~~3[[ 02-~ 50[9D 04 . [~~[[ 0`
-9 7067D 00 2 5774D 02-3 2196D 04 [ 0000D 00
 0 0000D-01 0 0000D-01 0 0005D-01 5 0.030-[[ ` 0[0[[ 00 0 ~.~ ~0~~  ~[~~
 ~ 0000D-01 [ 0000D 00 0 0.00~-0. ~ 0[030-0[ ~ 3~~[-0` . ~~0~ ~0 ~ ~~.~ 0~0.
 ~ 0000D-01 0 0000D-0[ 1 0000D 00 0 0.040-[[ [ 2[[[-0[ ~ 0~~.D-0.  ~ ~ 0 ~`
 0 0000D-01 0 0000D-0[ 0 0006D-0[ . 0007[ 00 ~ 0[0[-0` 0 0[0~-~~ 0 ~[~~[-~.
 1 0000D 00 0 0000D-0[ 0 0005D-0[ 0  ~~[[ ~[ 0 ~~~[ ~~ 0 0 ~[~~[-~[
 0 0000D-01 [ 0000D 00 ~ 0300D-0[ 0 ~~~.0-[[ ` 0[.[[-0`  ~~ 0 ~~ ~ 0[~~0-~`
 0 0000D-01 0 0~300-[[ [ 0000D 00 0 ~~~.0-[[ . .[~[-0[  ~ ~~ 0-~~  ~~[~0
 0 0000D-01 0 0000D-0[ 0 0~~~0-0[ . 0  ~[ ~~ ~ [~[[ ~[ . ~ ~~ 0-~~ ~ ~[ .[~~
 [ 0000D 00 0 0000~-[[ 0 0.~00-0~  . ~  ~[ .  . ~  ~ ~ 0-~~ ~ ~[~~[ .
 ~ 0000D-0[ [ 0000D 00 0 0000~-[[ 0 ~~~[0-~[  . ~ ~[ ~ ~ ~ ~ 0-~~ ~ ~[~~[ .
 0 0000D-01 0 0000D-0[ [ 0[00D ~~ ~  ~  ~ ~ ~ ~ ~ 0-~~  ~[ ~ .
 0 0000D-01 0 0000D-0[ 0 0[000-0[ ~ ~ ~[ ~~ ~
 0 000~D-01 0 .~~00 0[ 0 0~.~0-~~  ~ [~ .  ~ ~ ~ ~ ~ ~ 0-~~  ~~  [ [
 ~ 0000D-01 [ [0003 00 0 0[00D-~  ~ ~ .  ~ ~  0  ~[
 0 0000~-0[ 0 0~~0D-~[ [ 0.~0D ~ ~ .  . [  ~ ~ ~ ~ ~ ~ 0-~~  ~ 0 .
 0 0000D-01 0 0006~-0[ 0 0[.0D ~ ~ .  ~ ~ ~ ~ ~ ~ ~ 0-~~ 0~ ~[ [
 [ 0000D 00 0 0000~-0[ 0 0~.0[0-~.  . [ [  . ~ ~ ~ ~ ~ ~ ~ 0-~~  ~ [ .
```

```
 0 0000D-01 1 0000D 00 0 0000D-01 0 0000D-01 0 0000D-01 1 0000D 00 0 0000D-01
 0 0000D-01 0 0000D-01 1 0000D 00 0 0000D-01 0 0000D-01 0 0000D-01 1 0000D 00
 0 0000D-01 0 0000D-01 0 0000D-01 1 0000D 00 0 0000D-01 0 0000D-01 0 0000D-01
 1 0000D 00 0 0000D-01 0 0000D-01 0 0000D-01 1 0000D 00 0 0000D-01 0 0000D-01
 0 0000D-01 1 0000D 00 0 0000D-01 0 0000D-01 0 0000D-01 1 0000D 00 0 0000D-01
 0 0000D-01 0 0000D-01 1 0000D 00 0 0000D-01 0 0000D-01 0 0000D-01 1 0000D 00
 0.0000D-01 0 0000D-01 0 0000D-01 1 0000D 00
 0 0000D-01 0 0000D-01 0 0000D-01 0 0000D-01 1 0000D 00 0 0000D-01 0 0000D-01
 0 0000D-01 1 0000D 00 0 0000D-01 0 0000D-01 0 0000D-01 1 0000D 00 0 0000D-01
 0 [illegible] 01 0 0000D-01 1 0000D 00 0 0000D-01 0 0000D-01 0 0000D-01 1 0000D 00
 [illegible] 01 0 0000D-01 0 0000D-01 1 0000D 00 0 0000D-01 0 0000D-01 0 0000D-01
 [illegible] 00 0 0000D-01 0 0000D-01 0 0000D-01 1 0000D 00 0 0000D-01 0 0000D-01
 0 0000D-01 1 0000D 00 0 0000D-01 0 0000D-01 0 0000D-01 1 0000D 00 0 0000D-01
 0 0000D-01 0 0000D-01 1 0000D 00 0 0000D-01 0 0000D-01 0 0000D-01 1 0000D 00
 0 0000D-01 0 0000D-01 0 0000D-01 1 0000D 00 0 0000D-01 0 0000D-01 0 0000D-01
 1 0000D 00 0 0000D-01 0 0000D-01 0 0000D-01 1 0000D 00 0 0000D-01 0 0000D-01
 0 0000D-01 1 0000D 00 0 0000D-01 0 0000D-01 0 0000D-01 1 0000D 00 0 0000D-01
 0 0000D-01 0 0000D-01 1 0000D 00 0 0000D-01 0 0000D-01 0 0000D-01 1 0000D 00
 0 0000D-01 0 0000D-01 0 0000D-01 1 0000D 00
 0 0000D-01 0 0000D-01 0 0000D-01 0 0000D-01 1 0000D 00 0 0000D-01 0 0000D-01
 0 0000D-01 1 0000D 00 0 0000D-01 0 0000D-01 0 0000D-01 1 0000D 00 0 0000D-01
 0 0000D-01 0 0000D-01 1 0000D 00 0 0000D-01 0 0000D-01 0 0000D-01 1 0000D 00
 0 0000D-01 0 0000D-01 0 0000D-01 1 0000D 00 0 0000D-01 0 0000D-01 0 0000D-01
 1 0000D 00 0 0000D-01 0 0000D-01 0 0000D-01 1 0000D 00 0 0000D-01 0 0000D-01
 0 0000D-01 1 0000D 00 0 0000D-01 0 0000D-01 0 0000D-01 1 0000D 00 0 0000D-01
 0 0000D-01 0 0000D-01 1 0000D 00 0 0000D-01 0 0000D-01 0 0000D-01 1 0000D 00
 0 0000D-01 0 0000D-01 0 0000D-01 1 0000D 00 0 0000D-01 0 0000D-01 0 0000D-01
 1 0000D 00 0 0000D-01 0 0000D-01 0 0000D-01 1 0000D 00 0 0000D-01 0 0000D-01
 0 0000D-01 1 0000D 00 0 0000D-01 0 0000D-01 0 0000D-01 1 0000D 00 0 0000D-01
 0 0000D-01 0 0000D-01 1 0000D 00 0 0000D-01 0 0000D-01 0 0000D-01 1 0000D 00
 0 0000D-01 0 0000D-01 0 0000D-01 1 0000D 00 0 0000D-01 0 0000D-01 0 0000D-01
 0 0000D-01 1 5000D 00 1 6583D 00 1 3741D 00 1 0000D 00-3 5968D-01 0 0000D-01
-1 4474D 01 9.5856D-01-4 4191D-01-1 5522D 00 2 3895D 01 9 5797D-01-4 6356D-01
 1 1725D 00 4 9306D 00 8 6429D-01-3 2159D-01 1 6657D 00-1 4798D 01 8 2176D-01
-2 5150D-01-8.3755D-01 5 3824D 01 8 0467D-01-1 6945D-01 3 0976D 00-3 6213D 01
 7.9638D-01-5 4898D-02-1.1021D 00 3 5771D 01 7 9185D-01-4 3461D-02 1 4258D 00
 5.6116D 01 7.9403D-01 1 4977D-01 4 8703D 00 6 3014D 01 8 0919D-01 4 7670D-01
 8 0574D 00-9.1266D 02 8.1975D-01 4 4022D-01-1 1468D 01 3 1294D 03 8 3026D-01
 8.2648D-01 5 0488D 01-7.5985D 03 8 3855D-01 9 7778D-01-1 5801D 01 1 7716D 03
 8 5306D-01 9 4756D-01 1.1941D 01-3 1818D 02 8 6754D-01 1 0948D 00 7 4325D 00
 2.9998D 03 8.8197D-01 1 3906D 00 4 3468D 01-2 9724D 03 9 1279D-01 1 6803D 00
-1 2915D 01 1 6251D 04 9.4015D-01 2 9310D 00 2 0203D 02-5 3074D 03 9 6425D-01
 4 1731D 00 1.6622D 02-2.1403D 04 1 0000D 00
 0 0000D-01 1 5000D 00 5.2103D 00 4 5185D-01 1 0000D 00-2 3455D-01 0 0000D-01
 3 9175D 00 9 9829D-01-9.2735D-04 4 2012D-01 3 2867D 00 1 0017D 00 [illegible]
 7 9520D-01 5 0712D-01 1 0126D 00 1 5947D-01 2 4593D-01 5 7365D 00 1 0540D 00
 3.7567D-01 1 8152D 00-4.4818D 01 1 0842D 00 3 8887D-01-1 4571D 00 1 5063D 02
 1.1579D 00 1.2243D 00 1 5934D 01-1 8446D 02 1 2734D 00 [illegible] 00 [illegible] 00
-1 6351D 01 1 3942D 00 2.0368D 00 1 8943D 00-1 0146D 02 1 4975D 00 [illegible]
-3 2343D 00-3.5491D 03 1 5338D 00 1 1215D 00-7 9163D 01 4 7221D 03 1 5461D 00
 4 0126D-01 6.4073D 00-2.5541D 02 1 5499D 00 4 4744D-01 [illegible] 00-1 [illegible] 04
 1 5495D 00-9.7493D-01-1 8583D 02 1 2754D 04 1 5231D 00-2 3277D 00-5 [illegible] 00
-3 2719D 04 1 4853D 00-4 7496D 00-3 9813D 02-1 2948D 03 1 3215D 00-1 2642D 01
-4 3407D 02 7 0195D 04 1 1433D 00-1 2244D 01 4 3437D 02-3 5078D 04 1 0702D 00
-9 7067D 00 2.5774D 02-3 3186D 04 1 0000D 00
```

```
RETRIEVAL FILE NO  TP4-10-3
      FILE SIZE =    17
      L/D       =     1 0000
      ALFA      =     1 1250
 0 00000-01 2 35400-01 4 22210-01 5 55220-01 7 12551-01 8 57240-01 8 78010-01
 8 95900-01 9.11450-01 9 23970-01 9 34660-01 9 39510-01 9 60260-01 9 78170-01
 9 89940-01 9 94040-01 1 0000D 00
 1.60000 00 0 00000-01 1.29100-01 1 35540 00 1 00000 00-1 25160 00 0 00000-01
 1 15230 01 7.30420-01-9 32340-01 2 71260 00-1 34390 01 5 88990-01-6 60100-01
 2 02090-01 6 98180 00 5 05710-01-5 71460-01 1 13070 00-6 04710-01 4 29000-01
-4.00010-01 1.03500 00 7 21690 01 4 17920-01 4 94310-01 1 14090 01 2 87060 02
 4 31030-01 7.92330-01 1 73570 01-1 17720 02 4 47870-01 1 08390 00 1 52510 01
 2 61750 03 4.68210-01 1 63770 00 5 59610 01-5 80220 02 4 92910-01 2 29240 00
 4 86220 01 8.81350 02 5 20370-01 2 86250 00 5 80430 01-1 79260 03 5 34920-01
 3.12310 00 4.93410 01 2.74430 03 6 14430-01 4 77780 00 1 06290 02 6 05530 03
 7.22130-01 7 61240 00 2 14730 02 3 99130 04 8 37440-01 1 29040 01 6 84500 02
 2.00530 04 8 96220-01 1 58740 01 7 66530 02-1 28510 05 1 00000 00
 0.00000-01 0 00000-01 0 00000-01 0 00000-01 1 00000 00 0 00000-01 0 00000-01
 0.00000-01 1.00000 00 0.00000-01 0 00000-01 0 00000-01 1 00000 00 0 00000-01
 0 00000-01 0.00000-01 1.00000 00 0 00000-01 0 00000-01 0 00000-01 1 00000 00
 0 00000-01 0.00000-01 0 00000-01 1 00000 00 0 00000-01 0 00000-01 0 00000-01
 1.00000 00 0 00000-01 0.00000-01 0 00000-01 1 00000 00 0 00000-01 0 00000-01
 0 00000-01 1.00000 00 0 00000-01 0 00000-01 0 00000-01 1 00000 00 0 00000-01
 0.00000-01 0.00000-01 1 00000 00 0 00000-01 0 00000-01 0.00000-01 1 00000 00
 0 00000-01 0.00000-01 0 00000-01 1 00000 00 0 00000-01 0 00000-01 0 00000-01
 1 00000 00 0.00000-01 0 00000-01 0 00000-01 1 00000 00 0 00000-01 0 00000-01
 0 00000-01 1.00000 00 0 00000-01 0 00000-01 0 00000-01 1 00000 00
 0 00000-01 5 00000-01 2.46120 01 7 54930 00 1 00000 00 1 31400 00 0 00000-01
-7.28380 00 1 29370 00 1 11300 00-1 71460 00 4 78390 00 1 47690 00 8 76130-01
-8 20960-01-8.40750 00 1 58280 00 6 92560-01-1 93930 00-2 50990 01 1 65160 00
 7 09240-02-5.91320 00-9 26380 01 1 55480 00-1 73600 00-1 92290 01-2 93590 02
 1 51430 00-2 19750 00-2.53120 01-8 66640 02 1 47010 00-2 78880 00-4 08120 01
 2 36880 03 1 42330 00-3 13710 00-3 96930 00-1 35230 03 1 38330 00-3 29280 00
-2 09010 01 2.22940 02 1 34690 00-3 50240 00-1 85170 01-8 76330 03 1 32950 00
-3.69660 00-6.10560 01 3.70390 03 1 24520 00-4 16610 00 1 58000 01-5 40890 03
 1.16790 00-4.75060 00-8 10700 01-2 99110 04 1 09830 00-7 77650 00-4 33120 02
-6 55540 03 1.06270 00-9 60410 00-4 59950 02 7 71080 04 1 00000 00
 0.00000-01 0 00000-01 4 71010 00 3 59460 00 1 00000 00 3 17660-01 0 00000-01
-1 92960 00 1.07060 00 2 64200-01-4 54240-01 2 96760 00 1 11520 00 2 30070-01
 8 89160-02-8 39480-01 1 14620 00 2 34470-01-2 27450-02 3 61630 00 1 18550 00
 2.76200-01 5 49830-01-1 82650 01 1 22180 00 1 66540-01-2 07560 00-1 32960 02
 1 22460 00 9.49880-02-4 83070 00 7 60490-01 1 22550 00 8 71470-03-4 81710 00
-6 83240 02 1.22470 00-1 48840-01-1 54440 01-1 51680 02 1 22150 00-3 54090-01
-1.73430 01-7.76160 02 1 21660 00-5 83820-01-2 56390 01 3 22250 03 1 21350 00
-6 70310-01-9 99650 00-2 94660 03 1 19310 00-1 51210 00-7 11390 01 5 55890 02
 1 15510 00-2.69700 00-6 11840 01-5 53710 04 1 10410 00-7 25230 00-7 12890 02
 6 16560 03 1 06850 00-1 01180 01-6 87660 02 1 15280 05 1 00000 00
 0 00000-01-1.00000 00 5 06300-01 5 91440 00 1 00000 00-1 25390 00 0 00000-01
 1 12520 01 7 29510-01-9 41220-01 2 64880 00-1 19780 01 5 86890-01-6 55390-01
 4 11320-01-2 15790 00 5 02510-01-3 19770-01 1 24290-01 2 43990 01 4 22080-01
-2 94260-01 3.99740 00-5 43620 01 3 94060-01-2 82710-01-3 62660 00 1 67200 03
 3 89860-01-3 05680-03 3 08190 01-1 97490 03 7 92041-01. 2 47410-01-2 80700 00
-1 32910 03 3 95620-01 4 31170-02-2 34750 01 1 23520 04 3 98360-01 7 17350-01
 1 31180 02-1 71270 04 4 10040-01 1 14120 00-5 18470 01-7 53440 03 4 14900-01
```

```
 8.4751D-01-6.9054D 01 3 0638D 04 4 6324D-01 6 0:05D 00 5 6669D 02-2 .2"9D 04
 6 4139D-01 1.2747D 01 1 8560D 02 2 3282D 04 2 :0411-01 . 6544D 0: 4 59:2D 02
 2 2532D 04 8 8242D-01 1 8614D 01 5 5184D 02-9 25:3D 04 : 0900D 00
 0 0000D-01 1.5000D 00 5 1230D 00 1 :227D 00 : 0C00D 00-. 1951D-0: 0 0000D-0:
-2 6866D 00 9.6367D-01-2 0396D-01-6 3243D-01 1 6903D 00 9 1637D-0:-2 9261D-0:
-3 1667D-01 1 4048D 00 8 7520D-01-3 2230D-01-: 2961[-0: : 9607D 00 8 2384D-0:
-3.1828D-01 1.8063D-01 4.2676D 01 8 0108D-01 1 4855D-0: 6 3148D 00-7 8479D 02
 8 0435D-01 1 1093D-01-9 9460D 00 8 2475D 02 8 0552[-0: 4 4979D-02 4 8008D 0C
-3.4823D 01 8.0710D-01 1 3555D-01 4 2673D 00-3 4087D 02 8 0902D-0: : 0226D-0:
-3 6671D-04 5 4297D 03 8.1186D-01 4 7249D-01 5 8043D 0:-: 863'D 0: 0 :448D-0:
 5.3488D-01-3.2317D 01 5.9693D 03 8 2751D-01 1 1494D 00 9 154:D 0:-: 0149D 04
 8.5306D-01 1 1612D 00-9 0231D 01 9 8408D 04 8 8722D-0: 6 9:5:D 0C : 0680D 02
-4.0971D 04 9 2408D-01 1 0950D 01 9 0006D 02-1 5:02D 05 : 0000D 00
 0.0000D-01 1 5000D 00 1 3206D 01 3 9023D-01 1 0000D 00-8 3:09D-03 0 0000D-0:
 2.2977D-01 9 9854D-01-1 9446D-03 5 4083D-02 8 3:79[-0: : 090:D 00 2 3607D-02
 2 2161D-01 4 5106D 00 1 0070D 00 9 3185D-02 8 2:57[-0: 9 658:D 00 : 0384D 00
 3.4433D-01 2.3508D 00 9 8447D 01 : 1609D 00 : 6993D 00 : 6502D 0: 2 5354D 01
 1 1997D 00 2.0466D 00 1.7027D 01-2 2890D 03 1 2369D 00 : 9851D 00-2 29:0D 0:
 6.1239D 03 1 2687D 00 2 3539D 00 7 1334D 01-5 3974[ 03 : 3020D 00 2 8246D 0C
 3 7572D 00 1 9718D 03 1 3328D 00 2 9768D 00 2 4834D 0:-7 3578D 04 : 346:D 00
 2 2305D 00-3.3233D 02 2 6603D 04 1 3665D 00 : 0E:8[ 00 2 1969D 02-. .505D 05
 1 3046D 00-1 3455D 01-1 8408D 03 2 9816D 05 : 0992D 00-: 4806D 0: : 6450D 03
-2.3430D 05 1.0505D 00-9.8361D 00 6 8608D 02-: 1502D 05 : 0000D 00
 0 0000D-01 0.0000D-01 0.0000D-01 0 0000D-01 : 0E00[ 00 0 0000D-0: 0 0000D-0:
 0 0000D-01 1 0000D 00 0 0000D-01 0 0000D-01 0 0E00[-0: : 0000D 00 0 0E00D-0:
 0 0000D-01 0 0000D-01 1 0000D 00 0 0000[-01 0 3E00[-0: 6 0306D-01 : 0000D 0C
 0 0000D-01 0.0000D-01 0 0000D-01 1 0000D 00 0 0E00[-0: 0 0E06D-0: 0 0E00[-0:
 1 0000D 00 0 0000D-01 0 0000D-01 0 0000D-01 : 0E00[ 00 0 0306D-0: 0 0E00[-0:
 0 0000D-01 1 0000D 00 0 0000D-01 0 0000D-01 0 0E00[-0: . 0000D 00 0 0E00[-0:
 0 0000D-01 0 0000D-01 1 0000D 00 0 0000[-01 0 0000[-0: 0 6306D-0: : 0000D 0C
 0 0000D-01 0 0000D-01 0 0000D-01 1 0060D 00 0 3E00D-0: 0 0306D-0: 0 0E00D-0:
 1 0000D 00 0 0000D-01 0 0000D-01 0 0000D-01 : 0E00[ 00 0 0706D-0: 0 0E00[-0:
 0 0000D-01 1.0000D 00 0 0000D-01 0 00u0[-01 0 0E00[-0: : 0000D 00
 0 0000D-01 0 0000D-01 0 0000D-01 0 0306[-01 : 3E00[ 00 0 6306D-01 0 0E00[-0:
 0 0000D-01 1.0000D 00 0 0000D-01 0 0E06[-31 6 3E00[-0: . 0000D 00 0 0E00[-0:
 0 0000D-01 0 0000D-01 1 0000D 00 0 0000[-01 6 3E00[-0: 0 6306D-0: : 0000[ 0C
 0 0000D-01 0 0000D-01 0 0000D-01 : 0060[ 00 0 3E00[-0: 0 0306D-0: 0 0E00[-0:
 1 0000D 00 0 0000D-01 0 0000D-01 0 0060[-01 ! 3E00[ 00 0 0306D-0: 0 0E00[-0.
 0 0000D-01 1 0000D 00 0 0000D-01 0 0000[-01 0 0E:E[-0: : 0000D 00 0 0E00[-0:
 0 0000D-01 0 0000D-01 1 0000D 00 0 0000[-01 0 0E:E[-0: 6 0000D-01 . 0000D 00
 0 0000D-01 0 0000D-01 0 0000D-01 : 0060[ 00 0 3E00[-0: 0 0306D-0: 0 0E00[-0:
 1 0000D 00 0 0000D-01 0 0000D-01 0 0060[-01 : 3E00D 00 0 0306D-0: 0 0E00[-0:
 0 0000D-01 1 0000D 00 0 0000D-01 0 0060[-01 0 3E00[-0: : 0000D 00
 0 0000D-01 0 0000D-01 0 0000D-01 0 0060[-01 : 3E00[ 00 0 [3E0D-0: 0 0E00[-0.
 0 0000D-01 1 0000D 00 0 0000[-01 0 0060[-01 [ 3E00[-0: . 0000D 00 0 0E00[-0:
 0 0000D-01 0 0000D-01 1 0000D 00 0 0000[-01 0 3E00[-0: 0 0306D-0: : 0000[ 0C
 1 0000D 00 0 0000D-01 0 0000D-01 0 0060[-01 : 3E00[ 00 0 0306D-0: 0 0E00[-0.
 0 0000D-01 1 0000D 00 0 0000D-01 0 0060[-01 : 3E00[ 00 0 0306D-0: 0 0E00[-0:
 0 0000D-01 0 0000D-01 1 0000D 00 0 0060[-01 : 3E00[ 00 0 0306D-0: 0 0E00[-0:
 1 0000D 00 0 0000D-01 0 0000D-01 0 0060[-01 : 3E00[ 00 0 0306D-0: 0 0E00[-0.
 0 0000D-01 1 0000D 00 0 0000D-01 0 0060[-01 : 3E00[ 00 0 0306D-0: 0 0E00[-0.
 0 0000D-01 0 0000D-01 1 0000D 00 0 0060[-01 : 3E00[ 00 0 0306D-0: 0 0E00[-0:
 1 0000D 00 0 0000D-01 0 0000D-01 0 0060[-01 : 3E00[ 00 0 0306D-0: 0 0E00[-0:
 0 0000D-01 1 0000D 00 0 0000D-01 0 0060[-01 : 3E00[ 00 0 0306D-0: 0 0E00[-0:
 0 0000D-01 0 0000D-01 1 0000D 00 0 0060[-01 : 3E00[ 00 0 0306D-0: 0 0E00[-0:
 1 0000D 00 0 0000D-01 0 0000D-01 0 0060[-01 : 3E00[ 00 0 0306D-0: 0 0E00[-0:
 0 0000D-01 1 0000D 00 0 0000D-01 0 0060[-01 : 3E00[ 00 0 0306D-0: 0 0E00[-0:
 0 0000D-01 0 0000D-01 1 0000D 00 0 0060[-01 : 3E00[ 00 0 0306D-0: 0 0E00[-0:
 1 0000D 00 0 0000D-01 0 0000D-01 0 0060[-01 : 3E00[ 00 0 0306D-0: 0 0E00[-0:
 0 0000D-01 1 0000D 00 0 0000D-01 0 0060[-01 : 3E00[ 00 0 0306D-0: 0 0E00[-0:
 0 0000D-01 0 0000D-01 1 0000D 00 0 0060[-01 : 3E00[ 00 0 0306D-0: 0 0E00[-0:
 1 0000D 00 0 0000D-01 0 0000D-01 0 0060[-01 : 3E00[ 00 0 0306D-0: 0 0E00[-0:
 0 0000D-01 1 0000D 00 0 0000D-01 0 0060[-01 : 3E00[ 00 0 0306D-0: 0 0E00[-0:
 0 0000D-01 0 0000D-01 1 0000D 00 0 0060[-01 : 3E00[ 00 0 0306D-0: 0 0E00[-0:
 1 0000D 00 0 0000D-01 0 0000D-01 0 0060[-01 : 3E00[ 00 0 0306D-0: 0 0E00[-0:
 0 0000D-01 1 0000D 00 0 0000D-01 0 0060[-01 : 3E00[ 00 0 0306D-0: 0 0E00[-0:
 0 0000D-01 0 0000D-01 1 0000D 00 0 0060[-01 : 3E00[ 00 0 0306D-0: 0 0E00[-0:
```

```
 0 0000D-01  1.0000D 00 0 0000D-01 0 0000D-01 0 0000D-01 : 0000D 00 0 0000D-01
 0 0000D-01  0.0000D-01 1 0000D 00 0 0000D-01 0 0000D-01 0 0000D-01 1 0000D 00
 0 0000D-01  0.0000D-01 0 0000D-01 1 0000D 00 0 0000D-01 0 0000D-01 0 0000D-01
 1.0000D 00  0.0000D-01 0.0000D-01 0 0000D-01 1 0000D 00 0 0000D-01 0 0000D-01
 0 0000D-01  1.0000D 00 0 0000D-01 0 0000D-01 0 0000D-01 1 0000D 00 0 0000D-01
 0 0000D-01  0.0000D-01 1 0000D 00 0 0000D-01 0 0000D-01 0 0000D-01 1 0000D 00
 0.0000D-01  0.0000D-01 0 0000D-01 1 0000D 00 0 0000D-01 0 0000D-01 0 0000D-01
 1.0000D 00  0 0000D-01 0 0000D-01 0 0000D-01 1 0000D 00 0 0000D-01 0 0000D-01
 0.0000D-01  1.0000D 00 0 0000D-01 0 0000D-01 0 0000D-01 1 0000D 00
 0 0000D-01  1.5000D 00 5.1230D 00 1 1223D 00 1 0000D 00 1 2.44D-01 0 0000D-01
-2.7002D 00  9.6366D-01-2 0425D-01-6 3562D-01 1 7726D 00 9 1.74D-01-2 4.94D-01
-3 0430D-01  9.3480D-01 8 7517D-01-3 2425D-01-1 7.4D-01 3 3.73D 00 9 2.7D-01
-3.1079D-01  3.5001D-01 3.6865D 01 8 0099D-01 1 2675E-01 5 6.2D 00-7 9.65D 01
 8 0424D-01  1.7278D-01-5 8891D-01-1 9027D 02 8 0542D-01-1 -.4.1D-01-7 -6.7E 01
 7 0744D 03  8 0345D-01 1 7413D-01 7 5360D 01-1 3.52E 00 8 -.15D-01 1 1.3E-01
-5 4265D 01  9.4849D 03 8 1005D-01 2 1.069D-01 3 1.7D 00 0 1.1D 00 0 .17D-01
 2 6305D-01-1.4931D 01 5 2558D 03 8 2.3D-01 1 0.47D 00 7 4.2D 00 0 .4 P4.E 01
 8 4647D-01  1 1920D 00-8 2.45D 01 1 0.41D 05 6 8.0E-01 7 6 9.D 00 1 .8.D 01
-1 2649D 05  9 2391D-01 1 1.49D 01 6 0.48D 02-1 .1.2E 05 1 0.8D 00
 0 0000D-01  1 5000D 00 1 3202D 01 2 3.235-01 1 0.0E 00-8 7.4D-01 0 0.0D-01
 2 2977D-01  9 9954D-01-1 9.469-03 5 4.25-02 7 9.7E 01 0 1.D 00 1 5.7D-01
 2 2161D-01  4.5106D 00 1 0070D 00 9 3.85D-02 8 2.57E-01 7 0.3E 00 1 0.D 00
 3 4433D-01  2.3508D 00 9 8447D 01 1 1.09D 00 1 6.2D 00 1 0.7D 00 2 7.94D 01
 1 1997D 00  2 0446D 00 1 7027D 01-2 2.99D 03 1 2.4D 01 1 9.5D 00-2 3.6D 01
 6.1239D 03  1.2687D 00 2 3539D 00 7 1.23D 01-5 3.7E 00 1 3.0D 00 2 8.6D 00
 3 7572D 00  1.9713D 03 1 3328D 00 2 9.8D 00 2 4.3E 01-7 3.6D 00 0 3.D 00
 2 2305D 00-3 3233D 02 2 6603D 04 1 3.5D 00 1 3.2E 00 1 1.D 00 0 5.D 00
 1 3046D 00-1 3455D 01-1 8.08D 03 2 9.D 00 5 3.2E 00 1 .4.D 00 1 .4.D 00
-2 3430D 05  1 0505D 00-9 9361D 00 6 8.9E 02-1 1.2E 05 1 0.0D 00
```

```
 RETRIEVAL FILE NO  TP4-10-4
       FILE SIZE =    14
       L/D       =    1.0000
       ALFA      =    1.1250
 0 00000-01 4.1743D-01 6 3531D-01 7 4416D-01 8 0689D-01 8 4704D-01 8 7495D-01
 9 1207D-01 9.4507D-01 9.7023D-01 9 8199D-01 9 9007D-01 9 9403D-01 1 0000D 00
 1 0000D 00 0 0000D-01 6 5271D-02 1 3336D 00 1 0000D 00-1 1182D 00 0 0000D-01
 3 7900D 00 5.7917D-01-7 8801D-01 1 5820D 00-6 9524D 00 4 3304D-01-6 0834D-01
 6 7247D-02 1 3920D 01 3 7022D-01-5 1656D-01 1 5624D 00 4 9373D 01 3 4283D-01
-3 2216D-01 4 6794D 00 1 4319D 02 3 3521D-01-1 8839D-02 1 0429D 01 1 7883D 02
 3 3940D-01 3 4181D-01 1 5419D 01 5 3207D 02 3 6725D-01 1 2810D 00 3 5173D 01
 1 4848D 03 4.3756D-01 3 2498D 00 8 4165D 01 5 7467D 03 5 6121D-01 7 1860D 00
 2 2674D 02 1 9906D 04 6 5693D-01 1 1253D 01 4 6285D 02 6 8294D 04 7 7899D-01
 1 7222D 01 1.0147D 03 5 7346D 04 8 5572D-01 2 1690D 01 1 2418D 03-2 0796D 05
 1 0000D 00
 9 0000D-01 0 0000D-01 0 0000D-01 0 0000D-01 1 0000D 00 0 0000D-01 0 0000D-01
 0 0000D-01 1 0000D 00 0 0000D-01 0 0000D-01 0 0000D-01 1 0000D 00 0 0000D-01
 0 0000D-01 0 0000D-01 1 0000D 00 0 0000D-01 0 0000D-01 0 0000D-01 1 0000D 00
 0 0000D-01 0 0000D-01 0 0000D-01 1 0000D 00 0 0000D-01 0 0000D-01 0 0000D-01
 1 0000D 00 0 0000D-01 0 0000D-01 0 0000D-01 1 0000D 00 0 0000D-01 0 0000D-01
 0 0000D-01 1 0000D 00 0 0000D-01 0 0000D-01 0 0000D-01 1 0000D 00 0 0000D-01
 0 0000D-01 0 0000D-01 1 0000D 00 0 0000D-01 0 0000D-01 0 0000D-01 1 0000D 00
 0 0000D-01 0 0000D-01 0 0000D-01 1 0000D 00 0 0000D-01 0 0000D-01 0 0000D-01
 1 0000D 00
 0 0000D-01 5 0000D-01 3 3789D 01 6 9892D 00 1 0000D 00 1 3346D 00 0 0000D-01
-2 2241D-01 1 5545D 00 1 3155D 00-9 2342D-02-4 5.59E 00 1 6311D 00 1 1880D 00
-1 0768D 00-6 6153D 01 1 9392D 00 6 7197D-01-8 2775E 00-1 7.696D 02 1 9591D 00
-1 7807D-01-1 9946D 01-2 9773D 02 . 9.350 00-. .7481 00-3 0590D 01-4 6521D 02
 1 9671D 00-2 2998D 00-4 3581D 01-3 5386D 02 1 7726D 00-4 0751D 00-5 6905D 01
-1 9996D 03 1 5999D 00-6 5513D 00-9 7.630 01 5 4864D 03 1 4202D 00-7 1594D 00
 4 4946D 01-1 8897D 04 1 3740D 00-7 9383D 00-. 7.9E 0.-2 1.73D 05 1 2452D 00
-1 6351D 01-1 8946D 03-2 4836D 03 . 1.570 00-2 3.1D 0.-. 1.9.0 02 7 2000 05
 1 0000D 00
 3 0000D-01 0 0000D-01 3 4706D 00 2 9487D 00 1 0.1D0 0. . 7.47D-01 0 0010D-01
-3 9311D-01 1 3693D 00 1 4323D-01-. 9.03D-01 1 5592D 00 1 6.97D 00 . 4446D-01
 1 7544D-01-3 1151D-01 1 1160D 00 1 9.72D-01 1 4.52E-01-. 252.D 00 1 .2140 00
 1 6793D-01 5 6837D-02-8 1.240 02 . .12.E 00 1 8.2.7E-0.-2 9.70.0-01-2 9710D 01
 1 1374. 00 1 4459D-01-1 9980D 00-7 9.72D 01 1 .7 4. .0 1 9.9E.D-02-3 7.1.0D 00
-1 1.920 02 1 1403D 00-1 2185D-01-7 . . E .-. .-.7. .. . .2.7D 00-1 1747D 00
-7 5299D 01 5 5623D 03 1 1102D 03-. 9.54D 00-4 9.1CE 00-1 9.7.0 05 1 0870D 00
-5 1417. 00-8 4932D 02 8 2357D 03 . 2..7 90-7 4.921 0.-. 2 .7E .. 1 7.7D 05
 1 0000D 00
 0 0000D-01-5 0000D-01 5 1012D-01 3 .12D 00 1 1000D 01-. 0.1.0 00 0 0.1.0-0.
 4 2076D 00 6 3084D-01-6 3397D-01 . 15.4 00-. 5.71D 0. 5 2.1.0-0.-4 7. 0-01
 1 1420D-01 1 3660D 01 4 7752D-01-7 0.12D-01 1 2541 1E 2.51D 01 4 .2.0-01
-1 4091D-01 3 0507D 00 1 1122D 02 4 0.2.D-01 7 .247D-02 1 5.65D 00 3 0270 02
 4 6722D-01 3 9808D-01 1 5965D 01-3 0312D 02 4 .9.7E-01 1 .172D-01 2 4.7D 00
 2 8442D 03 5 3277D-01 2 2715D 00 1 0320 01 5 1.26D 03 6 4.46D-01 4 .7.7D 00
 2 7151D 02-3 2433D 04 7 3370D-01 1 2.90D 00 1 0990D 02 8705D 05 9 .0.4D-01
 1 2037D 01 1 3693D 02 6 9127D 02 1 .0.D 01 5 2E 1 7.9.D 03 2 7317D 05
 1 0000D 00
 9 0009D-01 1 5000D 00 2 0786D 01 1 0784D 00 1 0.00 0.-1 3.9.D 0. 0 .160D-0.
-1 3111D-01 9 7513D-01-1 0205D-01-3 05.9D-01-2 .1.6 0. 1 4.95D-01-2 .97D-01
-7 7496D-01-7 0725D 00 9 1190D-01-3 4594D-01-1 5447E 00 1 7.7.D 00 3 87.3E 01
```

```
-4 37450-01-1 37240 00 8 90500 01 8 [illegible]
 8 58140-01-3 54450-01 4 42020 00 1 [illegible]
 1 08290 03 8 56120-01 7 49120-01 4 41110 01 [illegible]
 1 05620 01 2 17650 04 9 08920-01 3 [illegible]
 5 18550 00 2.57960 02-4 78750 04 9 64360-01 5 [illegible]
 1.00000 00
 0 00000-01 1.00000 00 2 85780 01 4 74210 00 1 [illegible]
-7 52870-01 8 91040-01-3 04750-01-3 14270-01-4 [illegible]
-1 25530 00-1 00710 01 7 48350-01-6 72040-01-4 [illegible]
-8.44370-01-3.14340 00 3.13440 01 6 64950-01-9 [illegible]
 6 37630-01-1.01970 00-3.44770 00 3 43290 02 6 [illegible]
-1 03320 02 5.74710-01-6.60590-01 5 88840 00 1 [illegible]
 3.05010 02-1.78380 04 6.45990-01 5 60380 00 9 [illegible]
 1 59580 01 2 46740 03 1 37510 05 2 [illegible]
 1.00000 00
 0 00000-01 0 00000-01 0 00000-01 0 [illegible]
 0 00000-01 1 00000 00 0 00000-01 0 [illegible]
 0 00000-01 0 00000-01 1 00000 00 0 [illegible]
 0.00000-01 0 00000-01 0 00000-01 1 [illegible]
 1 00000 00 0 00000-01 0 00000-01 0 [illegible]
 0 00000-01 1 00000 00 0 00000-01 0 [illegible]
 0 00000-01 0 00000-01 1 00000 00 0 [illegible]
 0 00000-01 0 00000-01 0 00000-01 1 [illegible]
 1 00000 00
 0 00000-01 0 00000-01 0 00000-01 0 [illegible]
 0 00000-01 1.00000 00 0 00000-01 0 [illegible]
 0 00000-01 0 00000-01 1 00000 00 0 [illegible]
 0 00000-01 0 00000-01 0 00000-01 1 [illegible]
 1 00000 00 0 00000-01 0 00000-01 0 [illegible]
 0 00000-01 1.00000 00 0 00000-01 0 [illegible]
 0 00000-01 0.00000-01 1 00000 00 0 [illegible]
 0 00000-01 0 00000-01 0 00000-01 1 [illegible]
 1 00000 00
 0 00000-01 0 00000-01 0 00000-01 0 [illegible]
 0 00000-01 1 00000 00 0 00000-01 0 [illegible]
 0 00000-01 0 00000-01 1 00000 00 0 [illegible]
 0 00000-01 0 00000-01 0 00000-01 1 [illegible]
 1 00000 00
 0 00000-01 0 00000-01 0 00000-01 0 [illegible]
 0 00000-01 1.00000 00 0 00000-01 0 [illegible]
 0 00000-01 0 00000-01 1 00000 00 0 [illegible]
 0 00000-01 0.00000-01 0.00000-01 1 [illegible]
 1 00000 00 0 00000-01 0 00000-01 0 [illegible]
 0 00000-01 1.00000 00 0 00000-01 0 [illegible]
 0 00000-01 0 00000-01 1 00000 00 0 [illegible]
 0 00000-01 0.00000-01 0 00000-01 1 [illegible]
 1.00000 00
 0 00000-01 1.50900 00 2 03690 01 1 07040 00 1 [illegible]
-7 31110-01 9.75130-01-1 02050-01-3 05190-01-2 [illegible]
-7.74860-01-7.07250 00 9.11900-01-3 45960-01-1 [illegible]
```

```
-4 3745D-01-1 3724D 00 6 9950D 01 8 6326D-01-4 3616D-01 1 4365D 00 1 0693D 02
 8 5614D-01-7 5445D-01 4 4202D 00 1 0667D 02 2 4803D-01-1 1685D-01 8 3791D 00
 1 0829D 03 8 5612D-01 7 4912D-01 4 4111D 01-1 3335D 03 8 8539D-01 1 4369D 00
 1 0562D 01 2 1765D 04 9 0892D-01 3 0663D 00 2 6654D 02-1 0409D 03 9 4231D-01
 5 1655D 00 2 5796D 02-4 7875D 04 9 6436D-01 5 8316D 00 6 8420D 01-1 1458D 04
 1 0000D 00
 0 0000D-01 1 0000D 00 2 8578D 01 4 7431D 00 1 0000D 00-2 3916D-01 0 0000D-01
-7 5287D-01 8 9104D-01-3 0475D-01-7 1427D-01-4 3168D 00 0 8974D-01-4 7574D-01
-1 2357D 00-1 0071D 01 7 4835D-01-6 7204D-01-2 3515D 00-1 2624D 01 7 0105D-01
-8 4437D-01-3 1434D 00 3 1344D 01 6 6495D-01-9 4572D-01-1 6840D 00-5 6008D 01
 6 3763D-01-1 6197D 00-3 4477D 00 3 4329D 02 6 0033D-01-9 1113D-01 9 2976D 00
-1 0332D 02 5 7471D-01-6 6059D-01 5 8884D 00 1 1869D 04 5 9151D-01 2 2503D 00
 3 0501D 02-1 7830D 04 6 4599D-01 5 6033D 00 9 5215D 01 2 9355D 05 7 2620D-01
 1 5958D 01 2 4674D 03 1.3751D 05 8 0413D-01 2 6805D 01 3 0118D 03-5 6478D 05
 1 0000D 00
```

```
RETRIEVAL FILE NO  TP5-02-1
      FILE SIZE =   25
      L/D       =    0.2500
      ALFA      =    1.1250
 0 00000D-01  2 70740D-02 4 23790D-02 5 87790D-02 7 63330D-02 9 70330D-02 1 21870D-01
 1 52660D-01  1.9114D-01 2.3963D-01 3 01660D-01 3 78290D-01 4 69710D-01 5 75530D-01
 6 84300D-01  7 36650D-01 7 85100D-01 8 29740D-01 8 68830D-01 9 02710D-01 9 30250D-01
 9 52660D-01  9.7004D-01 9 8282D-01  1 00000D 00
 1 50000D 00  0 00000D-01 4 16720D 00 9 67450D-01 1 00000D 00 1 47420D 01 0 00000D-01
-2 59800D 04  . 31320D 00 5 22050D 00-7 03370D 02 4 54250D 03 1 31340D 00-5 01240D 00
-6 33850D 02  4 95870D 04 1 1824D 00-8 73910D 00 1 79780D 02-1 13120D 04 1 04850D 00
-7 33400D 00-1 92970D 01 5 1963D 03 8 98200D-01-6 62020D 00 8 82670D 01-1 50030D 03
 7 5718D-01-4 69210D 00 5 09190D 01-2 92130D 02 6 29310D-01-7 45790D 00 4 22310D 01
-4 51440D 02  5.2323D-01-2 1671D 00 2 48600D 01-2 18140D 02 4 43220D-01-1 21810D 00
 1 4281D 01-1 90010D 02 3 9116D-01-5 24570D-01 8 07770D 00-4 84270D 01 3 71030D-01
-4 7782D-02  4.3670D 00-2 0370D 01 3 82340D-01 2 66320D-01 2 50470D 00-3 06650D 00
 4 2394D-01  5 14190D-01 2 1800D 00 1 11280D 00 4 93000D-01 7 57190D-01 3 30.10D 00
 1 5811D 01  5 36210D-01 9 0004D-01 7 12680D 00 2 97470D 00 5 83540D-01 1 05510D 0.
 7 2730D 00  4 1101D 01 6 3452D-01 1 24220D 00 3 10400D 00 1 54720D 01 2 -7.40D-0.
   +037D 00  5 7114D 00 1 3423D 02 7 4955D-01 1 72420D 01 1 02..D 01  . ..100D 02
   -1260D-01 2 0458D 00 1 3095D 01 3 3836D 02 2 A1021D-01 3 4.770D 00 ^ 0.70 0 ^
 . +5615D 03 8 8833D-01 3 0021D 00 4 5335D 01 1 9501D 07 ^ 710.D-.1 ? .^4..  .^
 5 9357D 01-3 4541D 03 1 00000D 00
 9 00000D-01 0 00000D-01 0 00000D-01 0 0000D-01 1 9010D-0. ^. 0 0300D-0^ ^ ^^10D-01
 0 00000D-01 1 00000D 00 0 00000D-01 0 0000D-01 0 .10D-0. 1 ^.1 0 3D .  ^^.^D-^^
 0 00000D-01 0 00000D-01 1 00000D 00 0 0000D-01 0 ^0^1D-0. 0 .  -D-. 1 0  0D 00
 5 ^300D-01  0 00000D-01 0 00000D-01 1 0^00D 00 0 9010D-01 0 .  -D-. ^ .0.^D-0^
 1 30000 00  0 30500D-01 0 .^^00D-^. ^ 03^0D-01 1 9D90D ^0 ^ ^D. .D-01 ^ ^.^0D-0^
 . 03D30D-01 1 01000 ^. 0 00^0D-01 0 0^0^D-01 0 0P^0D-01 1  D^.1 .0  . ^.^0D-^.
 ^ 03000D-01 0 00000D-01 1 00000 00 0 0^000D-01 0 0000D-01 ^ 0.0 ^D-^1 1 00^^0 0^
   0320D-01  0 00000D-01 0 01000D-^. 1 ^0000 ^0 0 ^^10D-0^ 1 .^01.0^  . ^0^ ^1 ^
 . 305^1 00  0 .0500D-01 0 0^000D-01 0  ^10D-01 1 3^1D1 ^  . ^  D-^^ ^ ^.^.^0 .
 ^ ^.^^0D-01 . 00000 ^^ 0 00000D-01 0 ^ ^ 0D-01 1 ^0 01-0. 1 ... 0      . ^  .
   ^ D^.^-01 0 0^0^0D-01 1 00000 ^^ ^ 00^^0D-01 0 01^^D-0^ 1  0. 1^-1 . ^^.^0
 .  ^1 ^^. ^ ^ 1^ 10-01 ^ ^^^^0.-0. . . ^ 1 10 ^ ^^.11-0. ^ ^ .^^D-01 0 ^^^^^  .
 . .^^00 00 0 .0^^0-01 0 0 .^.0.-01 ^ 30^^0-^1 1 0 ^^1 ^    .. .^-^. ^ ^ .^^0-^.
   .3^^1-^   . ^.  . 50 ^ ^.3^^0-01 0 ... 0-^^ .  ^  . .  .  .  0  ^    .  .^^1 .
 . 0^.^0-^1 0 ..^.  ^^ 1 ^.^.^0  ^.
 ^    .^^.^ 5 ^^^.00-01 1 50.20 01 7 0^0^0  ^^ ^  ^. .^ ^  .^  ^    ^  .^^^0
 . .^^11   1 .  ^^0^  ^^ 1 51^70 00 4 40^^0  00 ^  ^.^^0 ^ .  .^.  ^  ^ ^0^^0 ^^
 . ^^^20 ^0 ^ 0.00  ^  . ^^^0.0 ^0 . ^.00.  0^ ^ ^1.1.  ^ ^.0 ^^ 1 ^ .  ^    ^ .
 . 770^.0 00 . 552.0-01 7 20^20 ^0 1 1^^70  00 1 ^. ^0 ^ ^  ^  .0 ^ .^  ^^^  .  .
 ^ .1250 00 1 .^^3( ^^-2 ^^^^0 00 0 ^^^^  ^0 ^  ^^^0 ^    .  .  .  ^^^0  .
 2 ^.7^1 01 1 .. ^0 .  . ^^ 00 ^^-1 ^ ^0  .  .  .  .  .  .  .  .  .  .  .  .  .
   41^1( ^^ 1 0 ^^0 ^1 1 4^.^^0 ^^ 1 4..^0  ^  ^  .^  .  .^  .  .  .  .  .  .
   .^^.0 00 1 ^7^.0 ^^-1 1.740 01 1 ^ ^^0  ^0 ^  ^^^0  ^  ^  .^  ^  ^^  .  .
 1 7^.^0 ^^ 7 ^1^30-^1-7 .^ ^0^ ^^-7 ^ .^^0  .  .  .  .  .  .  .  .  .  ^^^0  .
-. ^^020 01 1  ^.^(  .^-2 .^.^0-.^  ^  ^  ^  .  .  .  .  .  .  .  .  .  .  .  .
   .  ^.  .  .  ^^.^0 ^^ 1 ^  .^0  ^.  ^  ^  0  ^  ^.^  .  .  .  .  .  .  .  .
   .^0^ 0 ..  ^.^^0 ^^ ^  .^^0  ^  .  ^  0  ^  ^.^  .  .  .  .  .  .  .  .  .
   .^.^( ^^ ^ ^.^^  .  ^  .  .  .  .  .  .  .  .  .  .  .  .  .  .  .  .  .  .
-. .^^^0 0^ . ^.^^0  .^^ 21^10 .0-1 ^.^^0  ^.^  .  ^.  .  .  .  .  .  .  .  .
-  ^.^^^ 02 7 ^.^^0  ^^  . ^ .00-.0
   .  ^  ^^  .  .  .  .  .  ^.^^0  .  .  .  .  ^  .  .  .  .  .  .  .  .  .  .
```

```
-3 20150 02 1 08695 00 1 77130-01-8 64760 00 1 45800 02 1 00870 00 6 15520-02
-4 43620 00 4 59430 01 1 00690 00-3 78245-02-5 68280 00 3 66170 02 1 00770 00
-8 11630-02 7.45100-01 5 83120 00 1 00620 00-6 44910-02 8 65800-01 4 97810 01
 1 00490 00-2 76420-02 2 10200 00-4 13170 01 1 00495 00 1 74960-02 8 29750-01
-7 12500-01 1 00520 00 4 88920-02 8 62330-01-6 95720 00 1 00940 00 7 96250-02
 4 64960-01-3 64770 00 1 01500 00 1 01460-01 2 38470-01-5 1.2750-01 1 02350 00
 1 18260-01 1 99750-01 6 73050-02 1 03510 00 1 36810-01 2 03900-01-2 47070-01
 1 05070 00 1 57215-01 1 79760-01 1 17860 00 1 06910 00 1 83760-01 3 07950-01
-1 71850 00 1 07910 00 1 76120-01 1 63645-01 2 62090 00 1 01960 00 2 14350-01
 5 26220-01-1 15120 01 1 09900 00 2 29040-01 7 20760-02-1 20250 01 1 10780 00
 1 22670-01-3 98000-01 4 37720 01 1 11540 00 2 34220-01 1 08740 00-3 85650 02
 1 12100 00 1 18010-01-9 53610 00 1 66230 03 1 12420 00 3 2.640-01 2 77120 01
-1 37570 04 1 12210 00-1 27400 00-2 11350 02 1 90780 02 1 69810 00-3 95920 00
-7 09920 02 1 21570 04 1 00000 00
 1 03090 00-5 00000-01 7 03570 00 4 [illegible] 1 30060 01-7 8.610 03 6 00000-01
 1 27120 03 7 14250-01-6 55070 00 3 44161 01-1 93100 03 7 16870-01-6 24980 00
 4 86260 00 7 99620 03 6 17910-01-5 [illegible] 7 02760 01-1 42750 03 5 28600-01
-4 62090 00 4 51780 01 1 01790 02 4 [illegible] 3 65110 00 4 85240 01-5 08290 02
 3 65860-01-2 60280 00 3 59040 01-5 51030 02 2 30051-01-1 75990 00 1 89040 01
-1 96000 02 2 44500-01-1 17610 00 1 13100 01-3 70955 01 1 [illegible] 7 39920-01
 4 65370 00-4 83560 01 1 84020-01-4 19260-01 3 77820 01-3 02590 01 1 41700-01
-1 89230-01 2 22580 00-6 76680 00 1 33110-01-1 10230-02 1 69720 00-1 63530 00
 1 40620-01 1 49880-01 1 47420 00 0 .15.0 00 1 67791 01 7 58190-01 2 39410 00
 1 26050 01 1 89650-01 5 02090-01 3 10640 00 4 84520 01 2 18540-01 7 09450-01
 5 45290 00 7 25150 01 2 56730-01 1 02520 00 8 69135 00 1 88920 02 2 05300-01
 1 56770 00 1 59940 01 5 53280 02 3 69170-01 2 38751 00 3 47950 01 7 50140 02
 4 50150-01 3 61120 00 5 56150 01 8 12700 02 5 61150-01 6 89150 00 2 37630 02
-1 32990 04 7 04350-01 9 01790 00 6 52770 00 7 59180 07 9 12750-01 9 72110 00
 1 03540 02-6 02550 03 1 00000 00
 1 50000 00 1 50000 00 7 16350 00 4 12870 00 1 00150 00-6 58420 00 0 00000-01
 5 97570 03 9 41500-01-4 59420 00 1 .17 [illegible] 7 01020 03 7 91390-01-2 27300 00
 1 15410 02 1 68430 03 7.70870-01-1 53810-01 1 46020 02-1 14190 04 7 79910-01
 5 97470-01-5 74760 01 4 31050 03 7 64750-01 3 30020-01 7 17[illegible] 01-1 91600 03
 7 99480-01 5 27570-01-1 60390 01 6 .7710 02 9 1.120-01 3 2[illegible]-01 2 96920 00
-1 02070 02 9 24910-01 3 65020-01-9 58420-01-2 98741 01 9 49750-01 2 73080-01
-2 83390 00 6 67930 01 8 54690-01 2 25870-01 1 30850 03-4 [illegible] 00 8 79430-01
 3 02130-01 6 32670-01-2 71770 01 9 02[illegible] 2 5[illegible] 2 [illegible] 01
 9 24640-01 2 22830-01 1 27910 00-2 38020 01 9 51201-0. 2 [illegible]-01-1 33040 00
 3 74640 01 9 63270-01 2 83470-01 7 [illegible] 1 99[illegible] 01 9 77[illegible] 2 71490-01
-5 90990 00 2 68710 02 9 86080-01 2 35650-01 6 08710 00-5 [illegible] 02 9 94360-01
 4 54700-02-1 58170 01 9 16530 02 9 92770-01 3 57510-02 1 5[illegible] 01-1 52970 03
 9 94210-01-1 24210-01-2 68660 01-4 54260 02 9 [illegible] 2[illegible] 7 70430 01
 7 87560 03 9 70520-01-2 94290-01 9 99720 01-5 [illegible] 9 37[illegible]
 9 29810 01-5 41070 03 1 00000 00
 9 00000-01 1 00000 00 8 78330-01 7 [illegible] 1 00190 02-1 17170 01 6 00000-01
 1 12140 04 7 30690-01-7 20730 00 3 03610 02-1 [illegible] 04 6 47190-01-4 27560 00
 7 94840 01 6 99400 02 5 [illegible] 2 [illegible] 7 [illegible] 03 5 49030-01
-1 74860 00 3 77350 01-5 16310 02 5 20150-01-1 [illegible] 00 2 70470 01-5 95330 02
 5 00200-01-5 90050-01 1 22640 01-1 [illegible] 4 [illegible] 6 [illegible]
 [illegible] 4 79970-01-9 61130-02 3 21070 00-5 [illegible] 2 [illegible]
 7 71710-01 2 80700 00 4 79910-01 5 54170-02 9 [illegible] 4 86720-01
 1 19550-01 7 28250-01-1 39780 01 4 98910-01 1 27720-01-5 [illegible] 1 15740 01
 5 11640-01 1 34360-01 6 75120-01-1 01080 01 5 28020-01 1 [illegible] 4 24350-01
 3 90280 01 5 36180-01 1 79270-01 1 61890 00-5 87240 01 5 [illegible] 1 88790-01
```

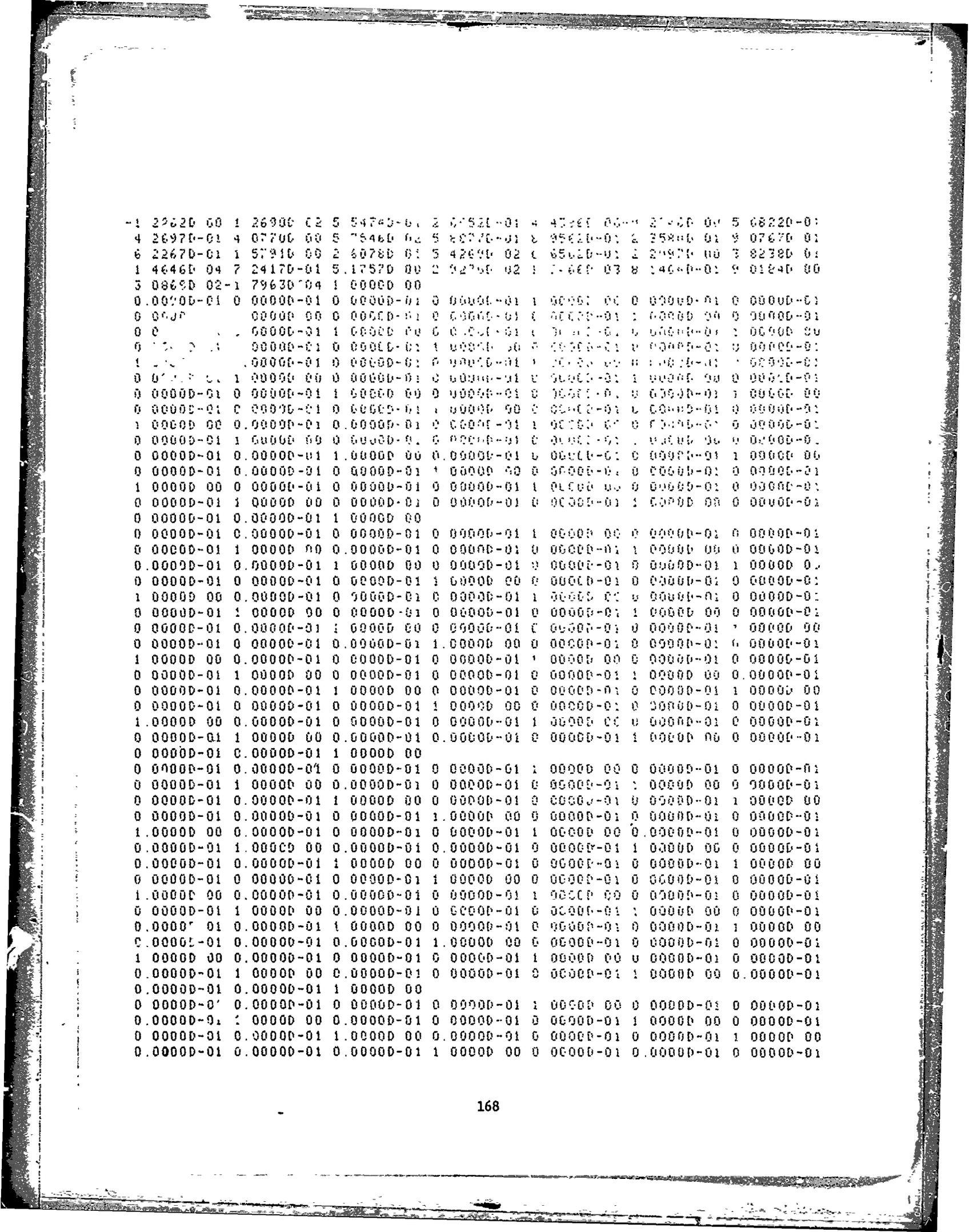

```
 1.00000D 00 0.00000D-01 0.00000D-01 0 00000-01 1 00000 00 0 00000-01 0.00000D-01
 0 00000-01 1 00000 00 0.00000D-01 0 00000-01 0 00000-01 1 00000 00 0 00000-01
 0.00000D-01 0.00000D-01 1.00000 00 0.00000D-01 0.00000-01 0 00000-01 1 00000 00
 0 00000-01 0.00000D-01 0.00000D-01 1.00000 00 0.00000-01 0 00000-01 0 00000-01
 1 00000 00 0.00000D-01 0.00000D-01 0 00000-01 1 00000 00 0 00000-01 0 00000-01
 0 00000-01 1.00000 00 0.00000D-01 0 00000-01 0 00000-01 1 00000 00 0 00000-01
 0 00000-01 0.00000D-01 1.00000 00 0.00000-01 0 00000-01 0 00000-01 1 00000 00
 0 00000-01 0.00000D-01 0.00000D-01 1.00000 00 0 00000-01 0 00000-01 0 00000-01
 1.00000 00 0.00000-01 0.00000D-01 0 00000-01 1 00000 00 0 00000-01 0 00000-01
 0 00000-01 1.00000 00 0.00000D-01 0 00000-01 0 00000-01 1 00000 00 0.00000D-01
 0 00000-01 0.00000-01 1.00000 00
 1.00000 00 0.00000-01 1.1194D 00 7.9351D-01 1 00000 00-5 7660D 00 0 00000D-01
 3 22580 03 8.5456D-01-4.5838D 00 8 7336D 01-6 9170D 02 7 9422D-01-3.3281D 00
 7.6750D 01-6.0717D 03 7.4550D-01-2 8859D 00-2 2826D 01 4 8646D 03 6 9571D-01
-2 5371D 00 6.2570D 01-3.5297D 03 6.5138D-01-1.9981D 00-1 0493D 01 1 4086D 03
 6 0212D-01-1.8244D 00 2.4487D 01-6 3438D 02 5 5446D-01-1 3711D 00 4 9526D 00
 6.7193D 01 5.0601D-01-1.1308D 00 7.5382D 00-1.8633D 01 4 5968D-01-7.8716D-01
 6.6346D 00-5.6410D 01 4.2137D-01-4 8413D-01 3 1353D 00 2.9016D 00 3 9370D-01
-2.3537D-01 3.3577D 00-1.8234D 01 3 8389D-01-4.6079D-03 1 6907D 00 6 6353D 00
 3.9418D-01 2.1145D-01 2.3929D 00 3 5379D 00 4.3209D-01 4 9266D-01 2.7777D 00
 1.3801D 01 4.6202D-01 6.5700D-01 3.5003D 00 4 0276D 01 4 9872D-01 8 7385D-01
 5.4516D 00-8.4021D 00 5.4305D-01 1.1089D 00 5.0765D 00 1 5834D 02 5 9185D-01
 1.4283D 00 1.1266D 01 1.3949D 02 6.4762D-01 1.8902D 00 1 5993D 01 1.3264D 02
 7.0618D-01 2.3807D 00 1.9645D 01 1 2170D 03 7 6674D-01 3 1264D 00 4 6914D 01
 2 2759D 03 9.3014D-01 4.2853D 00 8 6465D 01 2.2944D 03 8 9276D-01 5 5775D 00
 1.1578D 02-6.7376D 03 1.0000D 00
 0.00000D-01 0.00000D-01 8 7484D-01 1 5151D 00 1.00000 00-1 123.D 00 0.00000D-01
 9.1152D 02 9.7228D-01-8.2564D-01 2.1971D 01-5 3382D 02 9.6190D-01-5 5190D-01
 1.3801D 01-2 1966D 01 9.5469D-01-3 2851D-01 1 3441D 01-5 1336D 02 9.5053D-01
-1.7166D-01 4.4290D 00-6.7955D 01 9 4782D-01-9.4542D-02 3 0224D 00-1 2925D 02
 9.4608D-01-5.9338D-02-1.8714D-01 5.0588D 01 9 4441D-01-4 1118D-02 1 3706D 00
-5 8407D 01 9 4328D-01-3.1619D-02-8 7691D-01 1 9751D 01 9 4110D-01-5 0920D-02
 8 0891D-02-6.4489D 00 9 3784D-01-5 8310D-02-3 1915D-01 6 4701D 00 9 3292D-01
-6.3771D-02 1 7662D-01-3.8237D 00 9 2734D-01-6 3602D-02-1 7294D-01 3 9946D 00
 9.2043D-01-5 9537D-02 2.4977D-01-7 0022D-01 9 1528D-01-3 6512D-02 1.7360D-01
 8.0484D 00 9.1380D-01-1.6392D-02 5 9497D-01-1 3821D 01 9 1344D-01-3 7875D-03
-7 4634D-02 5.7377D 01 9.1405D-01 5 0064D-02 2.4870D 00-7 9621D 01 9 1711D-01
 8 6449D-02-6.2536D-01 2 3480D 02 9.2121D-01 2.0009D-01 7.3320D 00-5 7014D 01
 9.2929D-01 3.8032D-01 5.7626D 00 2.2851D 02 9 3969D-01 5 6681D-01 1 0883D 01
 1.7430D 03 9.5271D-01 1.0191D 00 4.1172D 01 1 0008D 02 9 6913D-01 1 5534D 00
 4.2451D 01-2.4703D 03 1.0000D 00
```

```
 RETRIEVAL FILE NO  TP5-02-2
       FILE SIZE =   24
       L/D       =    0.2500
       ALFA      =    1.1250
 0 0000D-01 3.4011D-02 6.9076D-02 1 0618D-01 1 4579D-01 1 9170D-01 2 4671D-01
 3.0034D-01 3.5384D-01 4.1743D-01 4.9059D-01 5 6967D-01 6 5269D-01 7.3399D-01
 8 0805D-01 8.4105D-01 8.7067D-01 8 9776D-01 9 2083D-01 9 4033D-01 9 5678D-01
 9.7016D-01 9.8065D-01    0000D 00
 1.0000D 00 0.0000D-01 9 4389D-01 9 5858D-01 1 0000D 00-1 7997D 00 0 0000D-01
 1.1955D 02 9.4294D-01-1 63'5D 00 4.0662D 00-1 3289D 02 8 8728D-01-1 5707D 00
-5.9359D-01 2.2313D 02 8.3049D-01-1 4391D 00 7 6851D 00-2 8060D 02 7 7661D-01
-1 3548D 00-3.4303D 00 1.0865D 02 7 1255D-01-1 3978D 00 1 5573D 00 2 0465D 02
 6.4370D-01-1 0025D 00 1.2815D 01-1.4623D 02 6 0440D-01-5 2557D-01 4 9693D 00
-1.1140D 02 5.8075D-01-4.1919D-01-9 9094D-01 5 4246D 01 5 5441D-01-3 7252D-01
 2.4588D 00 7 1941D-01 5 3378D-01-1 9070D-01 3 5114D 00-2 0355D 00 5 2639D-01
 1.5305D-03 2 3504D 00 6.5562D 00 5 3524D-01 2 1926D-01 2 8947D 00 1 0815D 01
 5.6360D-01 4.9032D-01 3.7740D 00 2 1584D 01 6 1172D-01 8 2903D-01 5 3716D 00
 7.2550D 01 6 4244D-01 1 0458D 00 7 7668D 00-2 4666D 01 6 7471D-01 1 2650D 00
 7 0363D 00 2 2400D 02 7 1431D-01 1 5379D 00 1 3105D 01 1 9324D 02 7 5360D-01
 1 8811D 00 1.6641D 01 2.4535D 02 7 9375D-01 2 2522D 00 2 1425D 01 6 4802D 02
 8 3416D-01 2.6921D 00 3.2091D 01 1 9427D 03 8 7386E-01 3 2957D 00 5 4099D 01
 2.1758D 03 9 1204D-01 4.0247D 00 9 0910D 01-4 1810D 03 1 9060D 00
 0 0000D-01 0.0000D-01 0 0000D-01 0 0000D-01 1 0000D 00 0 0000D-01 0 0000D-01
 0.0000D-01 1.0000D 00 0 0000D-01 0 0000D-01 0 0000D-01 1 0000D 00 0 0000D-01
 0 0000D-01 0.0000D-01 1 0000D 00 0 0000D-01 0 0000D-01 0 0000D-01 1 0000D 00
 0 0000D-01 0.0000D-01 0 0000D-01 1 0000D 00 0 0000D-01 0 0000D-01 0 0000D-01
 1 0000D 00 0.0000D-01 0 0000D-01 0 0000D-01 1 0000D 00 0 0000D-01 0 0000D-01
 0 0000D-01 1.0000D 00 0 0000D-01 0 0000D-01 0 0000D-01 1 0000D 00 0 0000D-01
 0 0000D-01 0.0000D-01 1 0000D 00 0 0000D-01 0 0000D-01 0 0000D-01 1 0000D 00
 0 0000D-01 0.0000D-01 0 0000D-01 1 0000D 00 0 0000D-01 0 0000D-01 0 0000D-01
 1 0000D 00 0.0000D-01 0 0000D-01 0 0000D-01 1 0000D 00 0 0000D-01 0 0000D-01
 0 0000D-01 1 0000D 00 0 0000D-01 0 0000D-01 0 0000D-01 1 0000D 00 0 0000D-01
 0 0000D-01 0 0000D-01 1 0000D 00 0 0000D-01 0 0000D-01 0 0000D-01 1 0000D 00
 1 0000D 00 0.0000D-01 0 0000D-01 0 0000D-01 1 0000D 00 0 0000D-01 0 0000D-01
 0 0000D-01 1 0000D 00 0 0000D-01 0 0000D-01 0 0000D-01 1 0000D 00 0 0000D-01
 0 0000D-01 1 0000D 00 0 0000D-01 0 0000D-01 0 0000D-01 1 0000D 00 0 0000D-01
 1 0000D 00 5 0000D-01 1 9768D 01 7 7195D 00 1 0000[ 00 1 4[7[D 00 0 0000D-01
-9 5677D 01 1 0500D 00 1 4378D 00-2 9140D 00 8 .455[ 01 1 [ [[.[ 0[ [ [[[[[
-5 7978D-02-1 4036D 00 1 1506D 00 1 7926D 00-1 1[.4[-01 1 [1[1[ 0[ 1 [[[.[ [
 1 3687D 00-5 9109D-01-2 2830D 01 1 2670D 00 1 3[75D 00-1 [[[.D 00 4 [6[2[ [
 1 3382D 00 1 2949D 00 8 1664D-01 1 0460D 01 1 40[1[ 0[ [ [5[[D 00 . [[[[[ 00
-5 6729D 01 1 4[21D 00 1-3463D 00-1 6[[6D 00 7 .2-6[ 00 1 [6-[[ [[ . 25[4[ [[
-1 2004D 00-6 2964D-01 1 6532D 00 1 1[6[[ 00-1 24[1[ 0[-1 [01-[ [[ [[[[[ [[
 1 0111D 00-2 [7[[D 00-2 [[0[D 01 1 [12-[ 00 [ 0[[[-[ [[ 1 [[[[ 00-1 [ [[ [
 1 [[0[D 00 1 [432D-01-8 5159D 00-1 [55[D 02 1 [[_[[ [ [ [[[[[-0[ [[[
-7 5021D 01 1.7979D 00-1 3777D 00-1 [[52D 01-[ [[[8[ [[ [ [[[ [ 00- [ [ [ [[
-3 6731D 01 8 8223D 01 1 6721D 00-3 1728D 00-3 4341[ 01-[ [[-[[ [_ [[ [ [[
-4 1045D 00-4 [310D 01-1 3785D 02 1 4[[1D 00-[ 2[[[[ 00-[ [1[[[ 0[-[ [[[[ [[
 1 [0079 00-6 6[[3[ 00-0 [014D 01-2 0[[[[ [3 1 30[[[ [ [ [ [[[[ [ [ [ [
-4 1368D 03 1 2095D 00-9 [08[D 00-1 7[[7D 02 8 [[[[ [ [ [ [[[[ [ [
 0 0000D-01 0 0000D-01 6 [[29D 0[ [ [[[[ 00 1 [[[[ [ [ [ [[[[ [ [ [[[[
-4 6792D 01 1.6[24D 00 7 4716D-0[-1 [[[[ [0 1 [[[[ [ [ [ [ [ [[[[ [ [
-1 1[825 00 1 [[38D 01 1 0[41D 00 [ [[[[-[[ [ [[[[ [ [ [ [ [ [[[[ [ [
 2 2317D-01-1 [[[[ 00-1 [[7[ 01 1 [[[[ 0[ 1 [[[[ [ [ [ [ [ [ [[[[ [
```

```
 1 0582D 00 8 0539D-02-4 0603D-01-4 6227D 00 1 0018D 00 5 2117D-02-6 5398D-01
 2 3276D 01 1 0643D 00 5 0430D-02 5 9113D-01-7 5428D 00 1 0683D 06 7 2771D-02
 1 1146D-01-3 9989D-01 1 0739D 00 7 9855D-02 8 2203D-02 1 4459D 00 1 0806D 00
 9.0875D-02 1.9651D-01-1.4322D-01 1 0888D 09 1 0670D-01 1 8462D-01-1 4274D 00
 1.0980D 00 1 1699D-01 6.9578D-02 2 5177D 00 1 1070D 00 1 2697D-01 2 5504D-01
-3 4055D 01 1.1112D 00 1 1884D-01-8 6883D-01 4 4905D 01 1 1145D 00 1 1281D-01
 4 6109D-01-1 0705D 02 1 1174D 00 8 6017D-02-2 4343D 00 1 4347D 02 1 1190D 00
 6 7938D-02 8.7201D-01-6 2715D 02 1 1197D 00-3 4274D-02-1 1357D 01 1 6946D 03
 1 1188D 00-4 1160D-03 1 5028D 01-1 5747D 04 1 1138D 00-1 2141D 00-1 9579D 02
-1.0440D 03 1 0901D 00-3 3251D 00-2 0674D 02 1 0666D 04 1 0006D 00
 0 0000D-01 0.0000D-01 1 1187D 00 4 7371D-01 1 0030D 00 7 5232D-01 0 0000D-01
-2 4151D 02 1 0240D 00 6 1264D-01-8 2140D 00 1 3472D 00 1 0464D 00 3 2544D-01
-8 1668D 00 1.3224D 02 1 0480D 00 1 1345D-01-3 2602D 01-2 4703D 02 1 0474D 00
-2 0952D-01-1.3046D 01-3 8901D 02 1 0178D 00-1 2182D 01-2 6303D 01 8 4025D 02
 9 2731D-01-1 6469D 00 1 5318D 01 5 7920D 02 8 7531D-01 7 9377D 03 4 6785D 01
-1 1072D 03 9.1445D-01 9 0515D-01-1 2840D 01 2 4962D 02 9 5675D-01 5 9338D-01
 3.0346D 00-4.9620D 01 1.0050D 00 6 8260D-01-5 9576D-01 2 7981D 01 1 0595D 00
 7.2297D-01 1.6169D 00-1 5165D 01 1 1236D 00 8 6486D-01 3 5622D-01 3 5583D 01
 1 1934D 00 9.5142D-01 3.2489D 00-1 5752D 01 1 2717D 00 1 1488D 00 2 0823D 00
 8 3501D 01 1 3113D 00 1 2630D 00 4 8380D 00 1 1878D 02 1 3517D 00 1 4594D 00
 8 3558D 00-3.3835D 02 1 3928D 00 1 5606D 00-8 1009D-01 8 0625D 02 1 4702D 00
 1 7566D 00 1.7796D 01-2 5704D 02 1 4647D 00 1 6149D 00-3 2327D 01 4 1978D 03
 1 0900D 00 1 6509D 00 3 6699D 01-6 7799D 04 1 4822D 00-2 9331D 00-8 7067D 02
-1 4666D 04 1 3963D 00-1 3874D 01-1 0247D 03 5 2962D 04 1 0000D 00
 0 0000D-01 1 5000D 00 5.2807D-01 4 0971D 00 1 6101 00-1 7117D 00 0 0000D-01
-2 6724D 02 9 3993D-01-1 8679D 00-9 0899D 00 1 0159D 03 2 7659D-01-1 5315D 00
 2 8277D 01-2 3904D 02 8 3715D-01-6 4682D-01 1 9468 01-3 7137D 02 8 2291E-01
-1 6938D-01 4.6963D 00-2 7925D 02 8 1558D-01-2 4801D-01-8 1221D 00 5 4982D 02
 8 0491D-01 1 3708D-01 2.2123D 01-1 1640D 02 8 4109D-01 1 1567D 00 1 5880D 01
-5 3060D 02 9 1212D-01 1 2466D 00-1 2504D 01 1 4407D 02 9 7229D-01 7 4273D-01
-3 3418D 00 3 3919D 01 1 0199D 00 5 8902D-01-8 6016D-01-2 9485D 01 1 0614D 00
 4 2893D-01-3 1587D 00 1 7194D 01 1 0676D 00 2 2346D-01-1 7611D 00 4 8648D 00
 1 1004D 00 9 6157D-02-1 3706D 00-3 6501D 01 1 1017D 03-1 0628D-01-4 6961D 00
 3 7287D 02 1 3978D 00-3 9416D-02 8 2090D 00-1 4F90D 03 1 0941D 00-4 1322D-01
-3 3520D 01 1 6039D 03 1 0759D 00-7 3274D-01 9 9310D 00-4 7238D 02 1 0607D 00
-6 2934D-01-9 7015D-01-1 8662D 03 1 0460D 00-1 0031D 00-3 7381D 01-1 4676D 02
 1 0243D 00-1 6372D 00-3 9774D 01 1 0264D 04 1 0629D 00-1 2551D 00 9 6672D 01
-9.7501D 02 9 9487D-01-2 9322D-01 8 6406D 01-4 4764E 03  0000D 00
 0 0000D-01 1 0000D 00 1 4624D 00 7 5716D 00 1 0L05D 00-6 6487D 00 0 0000D-01
 2 9696D 03 7 9336D-01-4 9307D 00 1 0106D 02-2 9823D 03 6 6755D-01-2 6729D 00
 2 7775D 01-1.1639D 02 5 8650D-01-1 7225D 00 2 3457D 01-3 2747D 02 5 3333D-01
-1 0468D 00 1.0659D 01-1.4235D 02 4 9421D-01-7 0747D-01 4 1244D 00 6 2873D 01
 4 6328D-01-3.8546D-01 7 5830D 00-2 1793D 01 4 5295D-01-1 0080D-02 6 4141D 00
-1 4048D 02 4 5801D-01 1 3204D-01-1 1004D 00 2 4867D 01 4 6514D-01 1 1234D-01
 4 8091D-01 3 5152D 00 4 7498D-01 1 5693D-01 7 3809D-01-9 3045D 00 4 8893D-01
 1 8621D-01 2 3103D-03 2.8487D 00 5 0467D-01 1 9622D-01 2 3881D-01 2 0389D 00
 5 2159D-01 2 2237D-01 4.0456D-01 5 3781D 00 5 3952D-01 2 6708D-01 8 0287D-01
 2.0430D 02 5.5001D-01 4.0483D-01 7 5451D 00-2.5016D 02 5 6422D-01 5 1257D-01
 1.3620D-01 7.5714D 02 5 8083D-01 8 0009D-01 2 0647D 01 3 9494D 02 6 0560D-01
 1.3817D 00 2.9762D 01 3 2696D 02 6 3861D-01 2 0243D 00 3 6137D 01 1 5347D 03
 6.7792D-01 2.8260D 00 6.1372D 01 1 6583D 04 7.2788D-01 5 1337D 00 2 8378D 02
 4.0937D 03 7.9810D-01 8.3311D 00 3.2632D 02-1 6866D 04 1 0000D 00
 0.0000D-01 0.0000D-01 0.0000D-01 0 0000D-01 1 0000D 00 0.0000D-01 0 0000D-01
 0.0000D-01 1.0000D 00 0 0000D-01 0 0000D-01 0 0000D-01 1 0000D 00 0 0000D-01
```

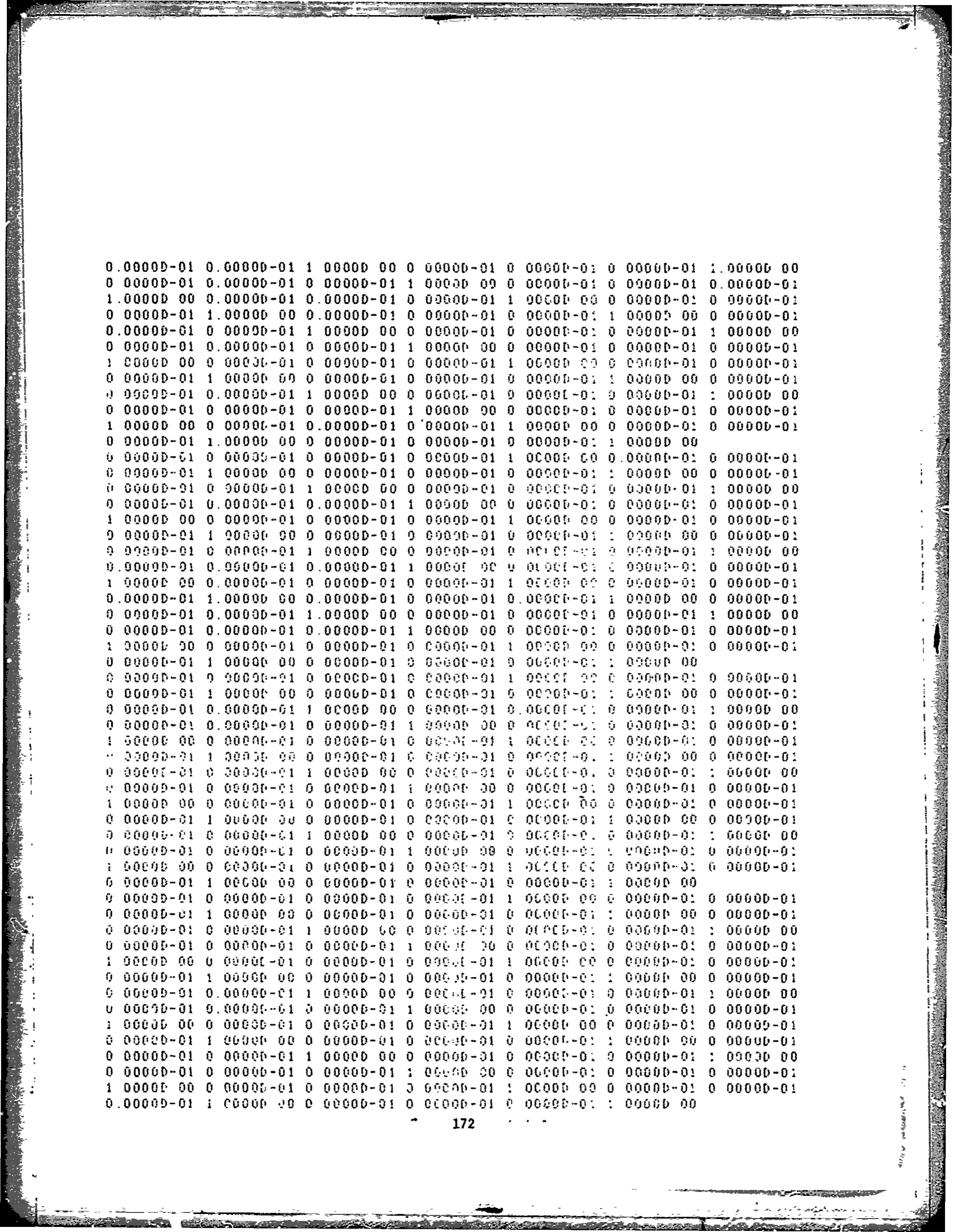

```
 0.00000D-01 0.00000D-01 5.28350D-01 2.10820D 00 1.00000D 00-3.91500D 00 0.00000D-01
 1.62410D 03 8.77500D-01-2.97560D 00 5.52390D 01-9.57400D 02 8.00240D-01-1.62720D 00
 2.16680D 01-2.50450D 02 7.52640D-01-9.95670D-01 1.23760D 01-9.96540D 01 7.21880D-01
-5.83610D-01 8.42820D 00-2.40270D 02 7.00100D-01-4.49870D-01-2.60110D 00 2.48180D 02
 6.78300D-01-2.17450D-01 1.10510D 01-1.06770D 02 6.79790D-01 2.21720D-01 5.32430D 00
-1.63810D 02 6.95090D-01 2.72170D-01-3.43820D 00 5.19270D 01 7.07670D-01 1.58530D-01
-1.35910D-01-3.90860D 00 7.18650D-01 1.38120D-01-4.21870D-01 6.39190D 00 7.28780D-01
 1.24750D-01 8.35910D-02 2.62420D 00 7.39670D-01 1.40730D-01 3.01450D-01 5.06550D 00
 7.52560D-01 1.81970D-01 7.13250D-01 1.46170D 01 7.68990D-01 2.74890D-01 1.79580D 00
 6.42850D 01 7.79420D-01 3.69150D-01 3.91730D 00-1.54630D 01 7.92000D-01 4.78390D-01
 3.45930D 00 1.35630D 02 8.06680D-01 6.21870D-01 7.13360D 00 3.84020D 02 8.23720D-01
 8.88750D-01 1.59960D 01 1.54550D 01 8.44110D-01 1.20360D 00 1.62970D 01 1.45620D 03
 8.67180D-01 1.66850D 00 4.02410D 01 2.80520D 03 8.94250D-01 2.45800D 00 7.77960D 01
 1.02290D 03 9.24510D-01 3.33080D 00 8.85260D 01-4.57560D 03 1.00000D 00
 0.00000D-01 0.00000D-01 1.48440D 00 2.76790D 00 1.00000D 00-1.21760D 00 0.00000D-01
 3.58060D 02 9.60940D-01-1.01050D 00 1.21780D 01-1.33300D 02 9.32030D-01-6.65450D-01
 7.50390D 00-8.93030D 01 9.11750D-01-4.48490D-01 4.19050D 00-3.30500D 01 8.96920D-01
-3.08430D-01 2.88130D 00-4.46550D 01 8.85080D-01-2.23210D-01 8.31460D-01 2.67170D 01
 8.74800D-01-1.37050D-01 2.30110D 00-2.56600D 00 8.70700D-01-1.73170D-02 2.16340D 00
-5.78510D 01 8.71390D-01 1.56400D-02-9.31170D-01 1.20610D 01 8.71020D-01-1.91880D-02
-1.64160D-01 9.04960D 00 8.69770D-01-6.97700D-03 4.97950D-01-9.88610D 00 8.69960D-01
 1.48910D-03-2.83830D-01 8.07920D 00 8.69870D-01 5.76840D-03 3.86920D-01 2.00080D 00
 8.71800D-01 4.38340D-02 5.49570D-01 4.04360D 00 8.76870D-01 9.56260D-02 8.49050D-01
 4.14880D 01 8.80690D-01 1.46240D-01 2.21820D 00-1.03410D 01 8.85950D-01 2.07400D-01
 1.91190D 00 1.08810D 02 8.92630D-01 2.99120D-01 4.85970D 00 1.95610D 02 9.01230D-01
 4.63370D-01 9.37510D 00 3.43950D 01 9.12090D-01 6.52720D-01 1.60440D 01 7.38330D 02
 9.24730D-01 9.17730D-01 2.21860D 01 1.76210D 03 9.39710D-01 1.37270D 00 4.57780D 01
 7.08890D 02 9.56760D-01 1.89180D 00 5.32130D 01-2.75040D 03 1.00000D 00
```

```
RETRIEVAL FILE NO  TP5-02-3
      FILE SIZE =   23
      L/D       =    0.2500
      ALFA      =    1.1250
 0 0000D-01 4.6386D-02 9 3360D-02 1.4227D-01 1 9396D-01 2.4946D-01 3 0981D-01
 3.7630D-01 4.4491D-01 5.1935D-01 5 9608D-01 6 7163D-01 7 3986D-01 8.0284D-01
 8.5850D-01 8.8293D-01 9.0459D-01 9 2397D-01 9 4077D-01 9 5513D-01 9 6724D-01
 9.7709D-01 1.0000D 00
 1.0000D 00 0.0000D-01 6.8536D-01 9 4935D-01 1 0000D 00-1 4253D 00 0 0000D-01
 7 0484D 01 9 3596D-01-1 3495D 00 3 2695D 00-6 1049D 01 8 7422D-01-1 2632D 00
 4.0177D-01 5.1281D 01 8 1392D-01-1 1822D 00 2 9099D 00-1 4083D 01 7 5637D-01
-1.0506D 00 2.1819D 00 7.3805D 00 7 0163D-01-9 1818D-01 2 5915D 00-1 5134D 01
 6 5038D-01-7.8934D-01 1.6781D 00 3 6275D 01 6 0338D-01-5 9759D-01 4 0899D 00
-4 1455D 01 5.6978D-01-4 1456D-01 1 2459D 00 1 9895D 01 5 4374D-01-2 6670D-01
 2 7269D 00-3.6821D 00 5 3103D-01-6 8296D-02 2 4444D 00 2 1036D 01 5 3455D-01
 1.7641D-01 4 0332D 00-3.7612D 00 5 5559D-01 4 4284D-01 3 7766D 00 3 1463D 01
 5 9227D-01 7.4307D-01 5.7581D 00 4 9492D 01 6 4397D-01 1 1401D 00 5 5136D 00
 1 6628D 02 6.7477D-01 1.3978D 00 1 2574D 01 2 7270D 01 7 0805D-01 1 6766D 00
 1 3165D 01 3 3758D 02 7 4342D-01 1 9951D 00 1 9707D 01 4 1689D 02 7 8006D-01
 2 3852D 00 2 6713D 01 5 2903D 02 8 1721D-01 2 8231D 00 3 4707D 01 2 0117D 03
 8 5462D-01 3 3863D 00 5 8676D 01 2 7073D 03 8 9125D-01 4 0955D 00 8 5345D 01
-3 7255D 03 1.0000D 00
 0 0000D-01 0.0000D-01 0 0000D-01 0 0000D-01 1 0000D 00 0 0000D-01 0 0000D-01
 0 0000D-01 1.0000D 00 0 0000D-01 0 0000D-01 0 0000D-01 1 0000D 00 0 0000D-01
 0 0000D-01 0.0000D-01 1 0000D 00 0 0000D-01 0 0000D-01 0 0000D-01 0 0000D 00
 0 0000D-01 0.0000D-01 0 0000D-01 1 0000D 00 0 0000D-01 1 0000D-01 0 0000D-01
 1 0000D 00 0 0000D-01 0 0000D-01 0 0000D-01 1 0000D 00 0 0000D-01 0 0000D-01
 0 0000D-01 1 0000D 00 0 0000D-01 0 0000D-01 0 0000D-01 1 0000D 00 0 0000D-01
 0 0000D-01 0 0000D-01 1 0000D 00 0 0000D-01 0 0000D-01 0 0000D-01 0 0000D 00
 0 0000D-01 0 0000D-01 0 0000D-01 1 0000D 00 0 0000D-01 0 0000D-01 0 0000D-01
 1 0000D 00 0 0000D-01 0 0000D-01 0 0000D-01 1 0000D 00 0 0000D-01 0 0000D-01
 0 0000D-01 1.0000D 00 0 0000D-01 0 0000D-01 0 0000D-01 1 0000D 00 0 0000D-01
 0 0000D-01 0 0000D-01 1 0000D 00 0 0000D-01 0 0000D-01 0 0000D-01 0 0000D-01
 0 0000D-01 0 0000D-01 0 0000D-01 1 0000D 00 0 0000D-01 0 0000D-01 0 0000D-01
 1 0000D 00 0 0000D-01 0 0000D-01 0 0000D-01 1 0000D 00 0 0000D-01 0 0000D-01
 0 0000D-01 1 0000D 00
   0000D-01 5 0000D-01 2 1734D 01 7 [illegible]
-6 0913D 01 1 0671D 00 1 4034D 00-2 [illegible]
-3 6241D-01-3 5436D 00 1 1957D 00 1 [illegible]
 1 2844D 00-3 0089D-01 1 2169D 00 1 [illegible]
 1 4390D 00 1 2472D 00-6 3154D 01 1 [illegible]
-1 8147D 01 1 5744D 00 1 1950D 00-1 [illegible]
-1 [illegible]
 7 4203D-01-3 2396D 00-8 5833D 01 1 [illegible]
 1 8423D 00-4 6320D-01-1 5515D 01-2 [illegible]
-1 2314D 02 1 7349D 00-2 4454D 00-3 [illegible]
-5 0422D 01-3 1584D 02 1 5984D 00-4 [illegible]
-5 4518D 00-7 1895D 01-2 5602D 03 1 [illegible]
 1 3392D 00-8 1556D 00-1 2382D 00-5 [illegible]
 7 7609D 03 1 0000D 00
 0 0000D-01 0 0000D-01 6 2735D 00 [illegible]
-2 1191D 01 1 0175D 02 2 5515D 01-[illegible]
-6 2407D-01 4 2890D 00 1 [illegible]
 1 7024D-01-4 2890D-01 [illegible]
```

```
 1 0.040 00 1 35140-01-2 74200-01 3 60440 00 1 06900 00 1 24870-01-3 45580-02
-2 91980 00 1 07730 00 1 13280-01-3 03410-01-4 17700 00 1 03460 00 7 91220-02
-1 14340-01 2 10820 00 1 05900 00 3 51890-02-4 52570-01 7 28500 00 1 09110 00
 2 47880-02 9 79310-02-2 38540 00 1 02290 00 2 59110-02-6 49250-02-4 80220-01
 1 09440 00 2 09700-02-9 51680-02-1 54990 01 1 09490 00-8 43870-03-9 57880-01
 1 63040 01 1 09450 00-2 80050-02-5 45970-01-1 13950 02 1 09360 00-6 53730-02
-3 01450 00 1 30890 02 1 05190 00-9 92150-02-4 78190-01-3 83390 02 1 08990 00
 . 81340-01-6 42130 00 4 05940 02 1 09710 00-2 18030-01-1 09550 00-8 89450 03
 1 06170 00-8 84820-01-1 08940 02-1 27990 03 1 06750 00-2 01890 00-1 2.440 02
 5 30100 03 1 00000 00
 0 00000-01 0.00090-01 1 20280 00 5 61210-01 1 00900 00 8 51090-01 0 00000-01
-6 96210 01 1 03830 00 7 76190-01-3 22950 00 1 52350 01 1 07150 00 6 41290-01
-2 51380 00 3 75170 00 1 09990 00 5 22830-01-2 33030 00 1 37390 01 1 12410 00
 4 20730-01-1 62010 00-7 46500 00 1 14480 00 3 19320-01-2 03440 00 5 67320 00
 1 16060 00 2 06860-01-1 69200 00 3 30350 01 1 17220 00 1 67380-01 5 04350-01
-6 90810 01 1 18110 00 3 94140-02-4 23490 00-3 28400 01 1 17010 00-3 66830-01
-6 67990 00-1 25150 02 1 11290 00-1 24790 00-1 62620 01 7 21230 02 1 02390 00
-4 19540-01 3 82090 01-5 79500 02 1 05360 00 8 38580-01-1 32980 00 8 09870 01
 1 19710 00 7 15150-01 3 77450 00-5 14640 01 1 10240 00 1 04560 00 9 05870-01
 4 09270 02 1 18920 00 1 18960 00 1 64020 01-5 23710 02 1 2.670 00 1 30320 00
-4 34030-01 5 18460 01 1 24190 00 1 70450 00 5 70170-01-3 29920 02 1 26270 00
 1 26750 00 4 47490 00-2 26590 02 1 22120 00 1 16860 00-8 80130 00-3 60610 04
 1 28400 00-1 56390 00-4 45630 02-1 07060 04 1 24510 00-6 49210 00-5 51090 02
 2.40560 04 1 00000 00
 3 04670-01 1 50030 00 1 03560 00 4 05750 00 1 00300 00-9 2.190-01 0 00000-01
 . 05310 02 9 59130-01-1 04320 03-5 62690 00 3 45920 02 9 06400-01-9 00270-01
 1 12220 01-5 65060 01 8 74690-01-4 18990-01 2 45870 00-6 13580 01 8 62920-01
-. 37030-02 5 28700 00-2 03150 01 8 06780-01 1 89200-01 3 82650 00-8 42140 01
 . 82080-01 2 66760-01-1 25610 00 9 72900 01 9 01810-01 3 98290-01 5 21240 00
-. 27660 02 9 34530-01 4 55480-01-3 54520 00 4 87490 01 9 61960-01 3 26630-01
 8 25760-02-3 52940 01 9 84610-01 2 29140-01-2 62460 00 1 24420 02 1 00340 00
 7 35950-01 6 27540 00-1 59760 02 1 02700 00 4 76370-01-4 12470 00 2 47610 01
 1 06940 00 2 05710-01-2 56330 00-1 17400 02 1 06730 00-5 59650-02-9 10030 00
 1 84460 02 1 00510 00-4 71790-02 1 00650 01-1 28280 03 1 06320 00-2 70960-01
-3 07240 01 1 07550 03 1 05350 00-6 64400-01-9 88240 00 1 93510 02 1 04110 00
-0 03160-01-6 63940 00-4 17140 03 1 02550 00-1 32810 00-6 65000 01 1 22010 04
 1 04950 00-1 23230 00 8 12990 01-1 80760 03 1 00090 00-5 25480-01 6 34970 01
-3 77190 03 1 00000 00
 1 .0010-01 1 10000 00 2 09220 00 7 27750 00 1 30701 0.-1 62400 01 0 00001-01
 . 05360 03 9 03540-01-3 45610 00 5 02620 01-7 56701 02 6 83400-01-1 93190 00
 1 41170 01-4 74110 01 6 05870-01-1 22630 00 1 27960 01-1 11890 02 5 50870-01
-7 77520-01 6 61230 00-3 60440 01 5 20070-01-4 66070-01 4 61180 00-4 77570 01
 1 04611-01 3 74030-01 1 75190 00 2 15740 01 4 25720-01-1 09901-01 3 18.00 00
 . 01990 01 4 82730-01-5 88160-06 1 71730-02 1 50950 01 4 82770-01 4 76940-02
 . 14080 00-1 50140 01 4 53410-01 8 64290-02-1 18791-01 3 91140 01 4 50770-01
 1 19230-01 2 49720 00-4 49170 01 5 10740-01 2 41721-01 6 75170-02 1 04110 01
 5 38430-01 7 71440-01 1 09220 00 6 03250 01 5 58721-01 4 78791-01 4 46-10 00
 . 00930 02 5 .31.0-01 7 93340-01 2 01201 01-5 .0101 1.0 3 7401 0-01 . .0700 00
   .7501 00 1 07120 03 6 18510-01 1 -4640 00 1 -1300 01 1 50110 01 1 4501-01
   10011 00 1 40410 01-3 01300 02 1 0-1201-01 1 70-01 1.0 1 9 1100 01 1 5340 04
 1 78241-01 4 03270 00 3 35550 02 4 70110 03 3 06740-0 3 1301.0 00 2 02-30 02
-1 27270 04 1 00000 00
 0 00000-01 0 30030-01 0 00000-01 0 03000-01 1 00700 01 0 00001-01 0 00000-01
 1 03010-01 1 20120 10 0 01.20-01 0 03201-01 0 70101-01 1 00000 00 0 00000-01
```

```
0 0000D-01 0 0000D-01 1 0000D 00 0 0000D-01 1 0000D-01 0 0000D-01 1 0000D 00
0 0000D-01 1 0000D 00 0 0000D-01 0 0000D-01 1 0000D-01 0 0000D-01 1 0000D 00
0 0000D-01 0.0000D-01 1 0000D 00 0 0000D-01 0 0000D-01 0 0000D-01 1 0000D 00
0 0000D-01 0 0000D-01 1 0000D 00 0 0000D-01 0 0000D-01 1 0000D-01 0 0000D 00
1 0000D 00 0 0000D-01 0 0000D-01 0 0000D-01 1 0000D-01 0 0000D-01 1 0000D 00
0 0000D-01 1 0000D 00 0 0000D-01 0 0000D-01 1 0000D-01 0 0000D-01 1 0000D 00
0 0000D-01 0 0000D-01 1 0000D 00 0 0000D-01 0 0000D-01 1 0000D-01 0 0000D 00
0 0000D-01 0.0000D-01 1 0000D 00 0 0000D-01 0 0000D-01 0 0000D-01 1 0000D 00
1 0000D 00 0.0000D-01 0 0000D-01 0 0000D-01 1 0000D-01 0 0000D-01 1 0000D 00
0 0000D-01 1.0000D 00 0 0000D-01 0 0000D-01 0 0000D-01 1 0000D-01 0 0000D 00
0 0000D-01 0.0000D-01 1 0000D 00 0 0000D-01 0 0000D-01 0 0000D-01 1 0000D 00
0 0000D-01 0.0000D-01 0 0000D-01 1 0000D 00 0 0000D-01 0 0000D-01 1 0000D 00
1 0000D 00 0 0000D-01 0 0000D-01 0 0000D-01 1 0000D-01 0 0000D-01 1 0000D 00
0.0000D-01 1.0000D 00
0 0000D-01 0 0000D-01 0 0000D-01 0 0000D-01 1 0000D-01 0 0000D-01 1 0000D 00
0 0000D-01 1 0000D 00 0 0000D-01 0 0000D-01 1 0000D-01 0 0000D-01 1 0000D 00
0 0000D-01 0 0000D-01 1 0000D 00 0 0000D-01 0 0000D-01 1 0000D-01 0 0000D 00
0 0000D-01 0.0000D-01 1 0000D 00 0 0000D-01 0 0000D-01 0 0000D-01 1 0000D 00
1 0000D 00 0 0000D-01 0 0000D-01 0 0000D-01 1 0000D-01 0 0000D-01 1 0000D 00
0 0000D-01 1 0000D 00 0 0000D-01 0 0000D-01 1 0000D-01 0 0000D-01 1 0000D 00
0 0000D-01 0 0000D-01 1 0000D 00 0 0000D-01 0 0000D-01 1 0000D-01 0 0000D 00
0 0000D-01 0.0000D-01 1 0000D 00 0 0000D-01 0 0000D-01 0 0000D-01 1 0000D 00
1 0000D 00 0.0000D-01 0 0000D-01 0 0000D-01 1 0000D-01 0 0000D-01 1 0000D 00
0 0000D-01 1.0000D 00 0 0000D-01 0 0000D-01 0 0000D-01 1 0000D-01 0 0000D 00
0 0000D-01 0.0000D-01 1 0000D 00 0 0000D-01 0 0000D-01 0 0000D-01 1 0000D 00
0 0000D-01 0.0000D-01 0 0000D-01 1 0000D 00 0 0000D-01 0 0000D-01 1 0000D 00
1 0000D 00 0 0000D-01 0 0000D-01 0 0000D-01 1 0000D-01 0 0000D-01 1 0000D 00
0.0000D-01 1.0000D 00
0 0000D-01 0 0000D-01 0 0000D-01 0 0000D-01 1 0000D-01 0 0000D-01 1 0000D 00
0 0000D-01 1 0000D 00 0 0000D-01 0 0000D-01 1 0000D-01 0 0000D-01 1 0000D 00
0 0000D-01 0 0000D-01 1 0000D 00 0 0000D-01 0 0000D-01 1 0000D-01 0 0000D 00
0 0000D-01 0.0000D-01 1 0000D 00 0 0000D-01 0 0000D-01 0 0000D-01 1 0000D 00
1 0000D 00 0 0000D-01 0 0000D-01 0 0000D-01 1 0000D-01 0 0000D-01 1 0000D 00
0 0000D-01 1 0000D 00 0 0000D-01 0 0000D-01 1 0000D-01 0 0000D-01 1 0000D 00
0 0000D-01 0 0000D-01 1 0000D 00 0 0000D-01 0 0000D-01 1 0000D-01 0 0000D 00
0 0000D-01 0.0000D-01 1 0000D 00 0 0000D-01 0 0000D-01 0 0000D-01 1 0000D 00
1 0000D 00 0.0000D-01 0 0000D-01 0 0000D-01 1 0000D-01 0 0000D-01 1 0000D 00
0 0000D-01 1.0000D 00 0 0000D-01 0 0000D-01 0 0000D-01 1 0000D-01 0 0000D 00
0 0000D-01 0.0000D-01 1 0000D 00 0 0000D-01 0 0000D-01 0 0000D-01 1 0000D 00
0 0000D-01 0.0000D-01 0 0000D-01 1 0000D 00 0 0000D-01 0 0000D-01 1 0000D 00
1 0000D 00 0 0000D-01 0 0000D-01 0 0000D-01 1 0000D-01 0 0000D-01 1 0000D 00
0.0000D-01 1.0000D 00
```

```
   ·10·[·0; 0 00030-01 1 0047D 00 3 55"D 00 : 0000D 01-2 "02v0 00 0 00600-01
   ·+·+5 ·2 3 "02D6-01-2 10900 00 3 ·D+45 01-4 25645 02 7 4004D-0'-1 2+72D 00
   ·05.0 01·7 52×36 01 7 4v940-01-7 ·"2-6-01 6 62420 00-8 7·"7D 01 7 10160-01
-4 50910-0; 1 0720D 00-2 22420 01 · 9·"·6-·1-2 58605-01 2 2044D 00-2 9+020 01
 · ·2"[-·1-1 40710-·1 1 06660 00 . ·1620 01 6 0'920-01-4 0531D-02 : 9451D 00
 . ·36×0 01 6 92190-·1 2 61580-02-9 [·6·0-·4 · 0·+50 00 6 84550-0' 4 26080-02
 1 +8290-01-6 0·170 ·· 6 50000-01 9 ·1720-·2-1 ·+060-02 · 5·170 01 6 9647D-01
 . 20000-01 3 45100 00-4 8707· 01 · 14"60-·1 5 ···31-9 : 2·8+0-01 3 20040 01
 " 50000-01 3 34520-01 2 20050 00 : +·"·0 01 7 ·1·1·-01 5 704·0-01 3 25760 00
 / 70700 02 7 76000-01 6 840+0-01 0 ·'·+0 ·0-1 7·:·5 02 " 9267D-01 8 45590-01
 " 94540 00 6 ·1041 02 8 1091D-·1 · · ·"0 00 : 7503D 01 2 7531D 02 8 31670-01
 3 40030 00 2 22230 01 1 11510 03 3 5472D-01 : 80220 00 3 02300 01 2 00000 03
 0 60700-01 2 51730 00 7 32150 01 1 "·5·0 02 0 00250-0· 3 3020D 00 8 02"2[ 01
-3 76590 03 1 00000 00
 9 50000-01 0 50000-01 2 00400 00 3 ·1640 00 · 0[000 0·-· ·1000 00 0 00000-01
 2 04830 02 9 47200-01-9 00600-01 9 5··30 00-9 02000 01 0 00600-01-6 50240-01
 4 95010 00-3 59140 01 8 03020-01-4 50°'0-01 3 1·000 0·-· 70640 01 8 63000-01
-3 04160-01 2 49150 00 1 33000 01 8 5·00·0-01-1 20·00-01 · 400·0 00-· 30030 01
 7 40510-01-1 70040-01 6 57570-01 0 5·"70 00 2 02"0·-01-0 6000·0-02 · 20900 00
-2 03250 01 8 31150-·.·2 50010-02-1 ·50·0-·1 0 1·+00 00 · 2·50·0-0.-7 00000-03
 9 76950-01-5 90070 00 8 70200-01 1 020·0-02 · 21.10-01 · 0020·0 01 8 33000-01
 6 74930-02 1 16590 00-1 24510 01 8 ·0000-01 · 10000-01 3 10·30-01 · 70·.0 01
 8 40000-01 1 72330-01 1 42000 00 6 ·0·00 00 6 00000-0· 2 00500-01 · 0000 00
 1 75730 02 8 67930-01 3 59020-01 6 0·0·0 00-· 02100 01 8 ·70·0-01 4 72900-01
 4 43070 00 2 00900 02 8 07000-01 0 ·30·0-01 9 00000 00 2 ·4·20 02 8 00200-01
 0 10050-01 1 35970 01 8 02070 02 9 12·00-01 1 00020 00 2 02070 01 · 01530 03
 · 20400-01 1 51200 00 4 22000 01 · 07500 03 0 ·5500-01 · 07000 00 5 23940 01
-. 20700 03 1 00000 00
```

```
 RETRIEVAL FILE NO  TP5-02-4
       FILE SIZE =   21
       L/D       =    0.2500
       ALFA      =    1.1250
 0.00000D-01 1.04620D-01 2 06760D-01 3 04340D-01 3 94860D-01 4 78480D-01 5 55970D-01
 6.25520D-01 6.88250D-01 7.44160D-01 7 93640D-01 8 36870D-01 8 74330D-01 9 05940D-01
 9.32770D-01 9.43810D-01 9 53800D-01 9 62740D-01 * 70550D-01 9 77446D-01 1 00000 00
 1 00000 00 0.00000D-01 3 03490D-01 9 32730D-01 1 00000 00-1 42470 00 0 00000D-01
 4 59270 01 8 59750D-01-1 17290 00 4 59510 00-3 72240 01   59110D-01-8 15-3E-0'
 1.41190 00 5 52700 00 6 83230D-01-6 91760D-01 1 45120 00-8 953'6 00 6 27535-0.
-5 51410-01 1 14070 00-3 23010 00 5 45000-01-4 67320D-01 8 70540D-01 1 51020 01
 5 52670D-01-3.54430D-01 2 04310 00-1 40360 00 5 32680D-01-2 15720D-01 1 94550 00
 1.98210 01 5 23990D-01-5 40820D-02 3 13430 00 2 08230 01 5 24510D-01   55380D-01
 4 32520 00 4.80230 01 5 40460D-01 4.29170D-01 6 70170 00 6 76000 01 5 05%20D-01.
 7.58630D-01 8 58620 00 1 93430 02 6 01960D-01 1 21600 00 1 56320 01-4 4-470 01
 6 47890D-01 1 69270 00 1 44320 01 1 00550 02 7 01990D-01 2 446 0 00 4 15120 01
-1 04230 03 7.31280D-01 2.84080 00 3 00100 01 2 61040 03 7 6181'0-01 2 27440 00
 5 62620 01 8 45160 02 7 92130D-01 3 93720 00 6 77420 01 7 629 0 07 8 29.50-01
 4 41560 00 9 20700 01 7 40410 03 8 57360D-01 5 20790 00 1 4 0'0 02-6 24040 0'
 1 00000 00
 0 00000D-01 0 00000D-01 0 00000D-01 0 00000D-01 1 00000 00 0 6J0+0-01 0 00000-0'
 0 00000D-01 1 00000 00 0 00000D-01 0 00000D-01 3 00300D-01 . n0%0 0 00 0 01n00-01
 0.00000D-01 0.00000D-01 1 00000 00 0 00000D-01 0 n.000-0. 0 ' .000+-0' ' 00.00 00
 0 00000D-01 0.00000D-01 0 00000D-01 1 00030 00 0 00.01-0.     .'.'0-0' . 310'5-0'
 1 00000 00 0 00000D-01 0 0000D-01 0 0000.0-01 1 0.001 10 . 1000+0-1 0 0'1 0-0'
 0 00000D-01 1 00000 00 0 00000D-01 0 n0000-01 0 00000-01 1 .20+0 0' 1 .00 0-0
 0 00000-01 0 0000'-01 1 00300 00 0 00000-01 0 00 300-01 4 0'0+0-0.    300-00 00
 0 0000D-01 0 00000-01 0 00000D-01 1 00000 00 0 00000-01 0 P0+00-01 0 10000-01
 1 00000 00 0 00000-01 0 00000-01 0 0'000-01 1 00.00 00 0 0'0+0-01 0 00000-0'
 0 0000D-01 1.00000 00 0 00000-01 0 00000-01 0 00000-01 1 00300 00 0 00+00-0'
 0 00000-01 0 00000-01 1 00300 00 0 0000'-01 0 1.'+0-0  .   0.'0+-1   .  0.'+0 0'
 0 00000-01 0 00000-01 0 00000-01 1 00+00 00 0 0300+0-1 0 0300+0-01 0 0.'+0-0'
 1 00000 00
 0 0000D-01 5 00000-01 2 97160 01 0 01050 00 1 00000 00 1 47340 01 0 70'00-0
-1 78330 01 1 14070 00 1 73'50 00-1 .'0'50 00 1 00'00 0' 1 00'0' 00 0 00'50 00
-2 76030-01 1 17100 00 1 30+'0 01 . .'0'0 00-1 00300-01 1 5'0+0 00 1 50'50 00
 1 20540 00 1 53510-01-2 11000 00 1 .'0'0 .0 1 .0'01 0.'0+-0 . .50'.0 '0
 1 60050 00 1 .0'00 00-1 00'50-01-1 70.0' 11 1 '0+0' 00 1 .40 1 .  .  00+00 00
-3 26070 01 1 64860 00 9 95'00-01-3 43950 00-7 30'00 01 1 0'0+0-01 0 0 0 0
-7 57040 00-1 19440 02 1 91910 00 1 00'0'-01-1 3440'0 0.'1 7'0+0 0. 1 3'0.0 00
-6 66290-01-2.52050 01-2 14130 02 1 00'00 00-1 70100 00-7 0.'70 01-1 1'0'40 07
 1 78750 00-3 40070 00-7 08340 01 2 04810 02 1 60'50 00-5 '70+0 0 1 00.10 0.
-6.47760 03 1.00030 00-6 .0060 00-1 0.0 0 00 1 '500' 0'1 0 0'0+0 0 1 0'0 0'
-1 14330 02-7 06650 07 1 40300 00-9 70. 1 '0-1 '0'0+ 0'0+1 5 0'0' 1 0'0+0 00
-1 02040 01-1 00'1' 0'0-1 44'50 04 1 0.0'0 00-1 10'01 0 0-1 '40 1 1 0'0 0 0.
 1 00000 00
 0 00000-01 0 00000-01 4 00'70 00 1 .'0'0 00 1 00'00 0' 1 0'0+0-1 1 0'0 0-1
-4 56940 00 1 01000 00 1 .20'0-01-4 70.'-01 1 0'0+0 00 1 0'0'0 0' 1 0.'0-0
-1 0'510-01 1 14040 '0 1 0.5 0 01 1 '0'0-0'-1 0.'0 1 0'0+0 0' 1 0'0 0 0'
 1 01200-01-3 24000-02 5 20+00-0. 1 0.0'0 00 1 0'0'0 -0 0'0'0+0 0 0'0+0
 1 07100 00 1 01440-01 1 0+170-02-1 0.0'0 00 1 0'0'0 0' 1 0'0+0 0' 1 0'0-0
 5 31000 00 1 00400 00 1 0 140-0. 1 0'0'0-01 0 0'0'0 00 1 0'0'0 0' 1 0'0-0
-2 16540-01 1 16000 01 1 0+520 00 1 0'0 0 01 1 0'0'0 00 1 0'0+0 0' 1 0'0 0'
 1 01470-01-5 00140 01 4 2.310 00 1 .0' 0 00 1 0'0'0 0'-01 1 0'0 0-0 1 0'0 0.
```

```
 1 1062D 00 6 5595D-02-9.2470D-01 1 5250D 01 1 1077D 00 4 6221D-02-5 1397D-01
-4 1319D 00 1 1081D 00 4.0297D-02-5 5357D-01-1 6502D 03 1 1082D 00-4.8782D-02
-1 7156D 01 5 0621D 02 1.1072D 00-1 8110D-01-1 2663D 01-2 2690D 04 1 1036D 00
-9 7177D-01-1.8984D 02-5.1866D 03 1 0925D 00-2.3684D 00-2.2478D 02 9 8947D 03
 1 0000D 00
 0 0000D-01 0.0000D-01 1.4163D 00 8 7461D-01 1 0000D 00 5 6691D-01 0 0000D-01
-1 0494D 01 1 0573D 00 5 0948D-01-1 0979D 00 6 7096D 00 1 1048D 00 4 3234D-01
-4 1261D-01-1 2112D-01 1 1450D 00 3 9150D-01-4 2443D-01 4 2191D 00 1 1792D 00
 3 7037D-01-4 2489D-02-1 3779D 00 1 2099D 00 3 6200D-01-1 5771D-01 4 0668D-01
 1 2375D 00 3 5100D-01-1 2619D-01 1 6799D 00 1 2617D 00 3 4629D-01-9 3548D-03
-5 3117D 00 1.2832D 00 3.3525D-01-3.4255D-01 1 6474D 01 1 3019D 00 3.4185D-01
 5 7854D-01-4 1416D 01 1 3187D 00 3 1978D-01-1 4707D 00 4 7009D 00 1 3312D 00
 2 6059D-01-1 2675D 00-4.6375D 00 1 3400D 00 2 0985D-01-1 4412D 00-1.4648D 02
 1 3452D 00 9 1771D-02-6 0556D 00-1 9862D 02 1 3448D 00-1 4336D-01-1 1405D 01
-1 5515D 03 1.3422D 00-3.6371D-01-2 8528D 01-2 9184D 03 1 3366D 00-7 9819D-01
-5 7679D 01-5 7297D 03 1 3266D 00-1 5374D 00-1 0873D 02-4 5622D 04 1.3076D 00
-3 7774D 00-4 6498D 02-2 0080D 04 1 2706D 00-7 3655D 00-6 0025D 02 2 6422D 04
 1 0000D 00
 0 0000D-01 1 5000D 00 4 7421D 00 4 0423D 00 1 0000D 00-3 3265D-01 0 0000D-01
-1 9195D 01 9 6268D-01-4 0486D-01-1 3804D 00 2 7609D 01 9 1903D-01-4 0184D-01
 1 4795D 00 5 0739D-01 8 9675D-01-2 5990D-01 1 4891D 00 3 9679D 00 8 6990D-01
-1 8741D-01 1 5462D 00-9 4196D 00 9 6642D-01 1 3703D-02 1 0506D 00 1 7201D 01
 1 7209D-01 1 4753D-01 2 3935D 00-1 6221.D 01 2 8F14D-01 2 7476D-01 1 2653D 00
 9 5907D 00 9 0726D-01 3 7301D-01 1 8669D 00-1 8631D 01 9 3049D-01 4 4827D-01
 2 2524D-01 1 1519D 01 9 5392D-01 5 0363D-01 1 4125D 00-7 2899D 01 9 7603D-01
 4 M457D-01-1 7390D 00-4 8096D 01 9 9249D-01 3 9768D-01-3 5406D 00-8 8845D 01
 . 3833D 00 2 4201D-01-6 7401D 00-6 2107D 02 1 0655D 00-1 5357D-01-2 3039D 01
 1 3352D 03 1 0027D 00-3 2655D-01-8 2980D 00-1 4725D 03 9 9875D-01-4 8431D-01
-1 3096D 01 2 2386D 03 9 9360D-01-6 9114D-01-3 2176D 00 6 2096D 02 9.9950D-01
-4 3699D-01 4 5280D 01 4 4253D 03 9 8781D-01-3 1937D-02 7 5062D 01-3 3038D 03
 1 0000D 00
 0 0000D-01 1 0000D 00 5 0945D 00 7 4703D 00 1 0000D 00-1 9420D 00 0 0000D-01
 . 2994D 01 8 1267D-01-1 4877D 00 8 4937D 00-5 9721D 01 6 9541D-01-1 1233D-01
 . 8329D 00 1 0197D-01 6 1371D-01-6 5834D-01 2 6626D 00-8 7467D 00 5 6861D-01
-4 5345D-01 1 8099D 00-5 9498D 00 5 3591D-01-2 2919D-01 1 3115D 00 4 8699D 00
 5 1423D-01-2 1395D-01 1 6888D 00-5 8726D 00 5 0371D-01-1 0776D-01 1 3360D 00
 . 1254 00 4 9926D-01-1 2561D-02 1 6992D 00-5 3906D 00 5 0161D-01 7 4020D-02
 . 7478D 00 4 6317D 01 5 0792D-01 1 9889D-01 3 6295D 00-6 6345D 01 5 1912D-01
 . 8727-01 2 9131D-01 5 1.1050 02-3 1783D-01 7 2665D-01 2 2061D 01-5 1975D 02
 5 9487D-01 9 6495D-01-6 8974D 00 3 7868D 03 5 9926D-01 1 9974D 00 8 3564D 01
 . 1.97E 03 6 2479D-01 2 4648D 00 4 7623D 00 1 0833D 04 6 5186D-01 3 0805D 00
 . 1271D 02-1 6527D 03 6 8348D-01 4 0245D 00 9 3039D 01 2 2203D 04 7 1969D-01
   A1.0D 09 2 7241.D 02 1 4695D 04 7 9347D-01 7 6299D 00 3 6737D 01-1 6171.D 04
 . 0000D 00
 0 0003E-01 0 1303D-01 0 0000D-01 0 0000E-01 1 0600E 00 0 0003D-01 0 0000D-01
 0 3000D-01 1 0000D 00 0 0000D-01 0 0000E-01 0 0000E-01 . 0306D 00 0 3000D-01
 1 0300D-01 0 0306D-01 1 0000D 00 0 0000E-01 0 0000E-01 0 0300E-01 1 0000D 00
 0 3000D-01 0 0303D-01 0 0030D-01 1 .0030 00 0 0000D-01 0 0300E-01 0 0000D-01
   0000D 00 0 3000E-01 0 0030D-01 0 0000E-01 1 0000D 00 0 0000E-01 0 0000D-01
   .0.1 1.01 1 1.06D 00 0 0.00D-01 0 0.00E-01 1 0.00D-01 0 0.000D-01 0 0000D-01
 1 0000D-01 0 3000D-01 1 0000D 00 0 0000E-01 1 0000D-01 0 0.000D-01 1 0000D 00
   0.00D-01 0 0000E-01 0 0.00D-01 1 0.00D-01 0 0.000D-01 0 0000D-01
   0000D 00 0 0000D-01 0 0000D-01 1 0000D-01 0 0000D-01 0 0000D-01
```

```
0 0000D-01 0 00000-01 1 0000D 00 0 00000-01 0 00000-01 0 00000-01 1 00000 00
0 0000D-01 0 00000-01 0.0000D-01 1 00000 00 0 00000-01 0 00000-01 0 00000-01
1.0000D 00
0.0000D-01 0.00000-01 0.0000D-01 0 00000-01 1 00000 00 0 00000-01 0 00000-01
0.0000D-01 1.0000D 00 0.0000D-01 0 00000-01 0 00000-01 1 0000D 00 0 00000-01
0 0000D-01 0.00000-01 1.0000D 00 0 00000-01 0.00000-01 0 00000-0  1 00000 00
0 0000D-01 0.00000-01 0 00000-01 1 00000 00 0 00000-01 0 00000-01 0 00000-01
1.0000D 00 0 00000-01 0.0000D-01 0.00000-01 1 00000 00 0 00000-01 0 00000-01
0 0000D-01 1.0000D 00 0.0000D-01 0 00000-01 0 00000-01 1 00000 00 0 00000-01
0.0000D-01 0.00000-01 1 0000D 00 0 00000-01 0 00000-01 0 00000-01 1 00000 00
0.0000D-01 0 00000-01 0.0000D-01 1 00000 00 0 00000-01 0 00000-01 0 00000-01
1 0000D 00 0.00000-01 0 0000D-01 0 00000-01 1 00000 00 0 00000-01 0 00000-01
0.0000D-01 1.0000D 00 0 00000-01 0.00000-01 0 00000-01 1 00000 00 0 00000-01
0 0000D-01 0.00000-01 1 00000 00 0 00000-01 0 00000-01 0 00000-01 1 00000 00
0.0000D-01 0 00000-01 0 00000-01 1 00000 00 0 00000-01 0 00000-01 0 00000-01
1.0000D 00
0 0000D-01 0 00000-01 0.0000D-01 0 00000-01 1 00000 00 0 00000-01 0 00000-01
0 0000D-01 1 00000 00 0.0000D-01 0 00000-01 1 00000 00 0 00000-01 0 00000-01
0 00000-01 0 00000-01 1 00000 00 0 00000-01 1 00000 00 0 00000-01 1 00000 00
0 0000D-01 0.00000-01 0 00000-01 1 00000 00 0 00000-01 0 00000-01 0 00000-01
1 00000 00 0 00000-01 0 00000-01 0 00000-01 1 00000 00 0 00000-01 0 00000-01
0.0000D-01 1.0000D 00 0.0000D-01 0 00000-01 0 00000-01 1 00000 00 0 00000-01
0 0000D-01 0 00000-01 1 00000 00 0 00000-01 0 00000-01 0 00000-01 1 00000 00
0 0000D-01 0.00000-01 0.0000D-01 1 00000 00 0 00000-01 0 00000-01 0 00000-01
1 00000 00 0 00000-01 0 00000-01 0 00000-01 1 00000 00 0 00000-01 0 00000-01
0 00000-01 1 00000 00 0 00000-01 0 00000-01 0 00000-01 1 00000 00 0 00000-01
0 00000-01 0 00000-01 1 00000 00 0 00000-01 2 00000-01 0 00000-01 . 00000 00
0 00000-01 0 00000-01 0 00000-01 1 00000 00 0 00000-01 0 00000-01 0 00000-01
1 00000 00
0 0000D-01 0 00000-01 0 00000-01 0 00000-01 1 00000 00 0 00000-01 0 00000-01
0 00000-01 1 00000 00 0 00000-01 0 00000-01 0 00000-01 1 00000 00 0 00000-01
0 00000-01 0 00000-01 1 00000 00 0 00000-01 0 00000-01 0 00000-01 1 00000 00
0 00000-01 0 00000-01 0 00000-01 1 00000 00 0 00000-01 0 00000-01 0 00000-01
1 00000 00 0 00000-01 0.00000-01 0 00000-01 1 00000 00 0 00000-01 0 00000-01
0 00000-01 1 00000 00 0 00000-01 0 00000-01 0 00000-01 1 00000 00 0 00000-01
0 00000-01 0 00000-01 1 00000 00 0 00000-01 0 00000-01 0 00000-01 1 00000 00
0 00000-01 0 00000-01 0 00000-01 1 00000 00 0 00000-01 0 00000-01 0 00000-01
1.0000D 00
0 00000-01 0 00000-01 4 73670 00 1 2127P 01 1 0C100 00-1 8904P 00 0 00000-01
1 0665D 02 8.22580-01-1 30670 00 1 .1580 31-6 8P4E0 0: 7 3:54P-0:-6 3:::0-01
2 97080 00 3.21150 00 6 90300-01-4 1C7+0-01 2 3E421 C0-. 0555P 01 6 .:700-0:
-7 41180-01 1 42870 00-3 76370 00 6 7>7=[-01-1 3E37'-0: ' 1.A90 00 3 60:80 00
6 26940-01-3 77420-02 1 3?3:0 00-3 0C: ? .. 4 2P0.:-01 5 :S:80-02 : :8230 00
9 79030 00 6 35470-01 1 42490-01 . 7P0+0 00 5 6'44? 00 6 4423D-01 2 46790-01
? 02250 00 2 42410 01 6 61410-11 ? 7>7?E >1 ' >. :: ? . 3'77D 01 6 00090-01
? :.2720-01 7 81760 00 1 50180 02 7 .-7 ' >: ' >0.:. . ' 5 7>? 00-6 7503C 0:
7 >3C:0-01 1 CC+20 00 6 7C110 00 ? ?.:2 .. : 6 ?:+.  5 - 0 00 3 36-60 01
. 03560 03 7 66330-01 1 98420 00 2 2220. 0: . >2 >0 (7 : 0697D-01 2 26710 00
= 2:0?E 01 1 11870 03 8 29290-01 2 772.0 >0 6 :67+0 0 5 9:?30 03 8 53350-01
7 >>>:0 00 : 07910 02 4 45660 03 > 7?.70-01 - 2'.70 >> . 3'>20 02-6 07:70 03
```

```
 1.0000D 00
 0.0000D-01 0 0000D-01 5 0947D 00 9 2921D 00 1 0990D 00-1 0579D 00 0 0006D-01
 4 8995D 01 8.9867D-01-7.9980D-01 5 .2490 00-2 e399D 01 9 3827D-01-4 5621D-01
 1.4073D 00 2.4307D-01 8 0049D-01-3.1733D-01 1 4310D 00-5 3454D 00 7 7693D-01
-2 1009D-01 9.4710D-01-1.5538D 00 7 6252D-01-1 3633D-01 9 1717D-01 1 1830D 00
 7.5450D-01-6.9460D-02 9 0884D-01 6 8360D-01 1 5191D-01-4 5819D-03 9 5675D-01
 3.1551D 00 7 5364D-01 6.1642D-02 1 1547D 00 5 9257D 00 7.5906D-01 1 3547D-01
 1.4860D 00 1.7242D 01 7.6793D-01 2 3010D-01 2 3391D 00 1 1982D 01 7 8022D-01
 3.4242D-01 2.8571D 00 9.9309D 01 7 9593D-01 5 1913D-01 6 5774D 00-4 7687D 01
 8.1529D-01 7.0258D-01 5.0688D 00 6.7871D 02 8 3827D-01 1 0853D 00 2.3348D 01
-5.3773D 02 8 5154D-01 1.3102D 00 1 7414D 01 1 7678D 03 8 6590D-01 1 5747D 00
 3.5192D 01 9.7279D 02 8.8137D-01 1 9253D 00 4 3825D 01 3 9293D 03 8 9806D-01
 2 3674D 00 7.4509D 01 3 3112D 03 4 1609D-01 2 9644D 00 9 6815D 01-4 2617D 03
 1.0000D 00
```

```
 RETRIEVAL FILE NO  TP5-05-1
       FILE SIZE =   25
       L/D       =    0.5000
       ALFA      =    1 1250
 0 0000D-01 5 52190-02 8 90790-02 1 22330-01 1 57470-01 1 98650-01 2 46710-01
 3.0166D-01 3 64760-01 4 3712D-01 5 17650-01 6 01480-01 6 84300-01 7 62160-01
 8.2974D-01 8 59110-01 8 96010-01 9 68950-01 9 29620-01 9 44710-01 9 61280-01
 9.7309D-01 9.82370-01 9.8937D-01 1 00000 00
 1 5000D 00 0 00000-01 1 8613D 00 9 73650-01 1 00000 00-2 30300-01 0 00000-01
-6 9096D 02 9.6789D-01-1 2837D 00-3 8.540 01 1 61490 02 9 0360D-01-2 48300 00
-3 2686D 01 1 35190 03 8 1126D-01-2 82240 00 1 22600 01-3 00240 02 7 17400-01
-2 5772D 00 1.70890 00 3 5850D 02 6 16950-01-2.20260 00 1 64770 01-9 8851D 01
 5 2829D-01-1 52540 00 1 1722D 01-6 41460 01 4 68350-01-9 79610-01 6 .9640 00
-4.1067D 01 4.13270-01-5 4254D-01 9 60870 00-4 .2590 01 3 8734-01-1 02830-01
 4.0609D 00-9.04570 00 3 9420D-0. 1 0491D-01 7 33230 00-4 37500 00 4 04270-01
 3 6885D-01 2 96560 00 1 5640D 00 4 45160-01 6 20950-01 3 12000 00 1 32600 01
 5 0401D-01 9.04000-01 4 1525D 00 3 24360 01 5 76250-01 1 25870 00 6 34450 00
-2.3524D 01 6 15840-01 1 4348D 00 5 65250 00 2 75080 02 6 57380-01 1 68640 00
 1.3053D 01-2.28920 02 6 9905D-01 1 92570 00 7 80010 00 7 17270 02 7 41580-01
 2 2402D 00 2 26270 01-1 6279D 02 7 83070-01 4 60290 00 1 90280 01 1 39680 02
 8.2376D-01 3 0399D 00 4 9172D 01 1 50820 03 8 62850-01 2 6.940 00 5 79850 01
 7.8844D 03 9.0003D-01 4.4974D 00 1 31170 02 4 76220 03 9 34990-01 5 53220 00
 1.6451D 02-1.5475D 04 1.0000D 00
 0 0000D-01 0.00000-01 0 0000D-01 0 00000-01 1 00000 00 0 00000-01 0 00000-01
 0.0000D-01 1.0000D 00 0 0000D-01 0 00000-01 0 00000-01 1 00000 00 0 00000-01
 0.0000D-01 0.00000-01 1.0000D 00 0 00000-01 0 00000-01 0 00000-01 1 00000 00
 0.0000D-01 0.00000-01 0 0000D-01 1 00000 00 0 00000-01 0 00000-01 0 00000-01
 1.0000D 00 0.00000-01 0.0000D-01 0 00000-01 1 00000 00 0 00000-01 0 00000-01
 0 0000D-01 1.00000 00 0.0000D-01 0 00000-01 0 00000-01 1 00000 00 0 00000-01
 0.0000D-01 0.00000-01 1.0000D 00 0 00000-01 0 00000-01 0 00000-01 1 00000 00
 0 0000D-01 0.00000-01 0 0000D-01 1 00000 00 0 00000-01 0 00000-01 0 00000-01
 1.0000D 00 0.00000-01 0 0000D-01 0 00000-01 1 00000 00 0 00000-01 0 00000-01
 0 0000D-01 1 00000 00 0.0000D-01 0 00000-01 0 00000-01 1 00000 00 0 00000-01
 0.0000D-01 0 00000-01 1 0000D 00 0.00000-01 0 00000-01 0 00000-01 1 00000 00
 0.0000D-01 0.00000-01 0.0000D-01 1 00000 00 0 00000-01 0 00000-01 0 00000-01
 1.0000D 00 0 00000-01 0.00000-01 0 00000-01 1 00000 00 0 00000-01 0 00000-01
 0.0000D-01 1 00000 00 0 00000-01 0 00000-01 0 00000-01 1 00000 00 0 00000-01
 0.0000D-01 0.00000-01 1.0000D 00
 0.0000D-01 5.00000-01 1 5087D 01 5 9383D 00 1 00000 00 1 4045D 00 0 00000-01
-2.8103D 01 1.0768D 00 1.3617D 00-1 5518D 00 7 0452D 01 1 1224D 00 1 3495D 00
 8.3368D-01-6.0989D 00 1.1677D 00 1 3739D 00 0.31230-01-3 6327D 01 1 2161D 00
 1.3736D 00-6.4540D-01 3.7404D-01 1 2722D 00 1 3474D 00-6 3000D-01 1 1453D 00
 1.3362D 00 1.3184D 00-5 7496D-01-4 8790D 00 1 4077D 00 1 2794D 00-8.4310D-01
-2.9826D 00 1.4866D 00 1.2203D 00-1 0313D 00-5 9651D 00 1 5718D 00 1 1301D 00
-1.4629D 00-3.6179D 00 1.6578D 00 1 0005D 00-1 7543D 00-1 6336D 01 1 7339D 00
 7.9609D-01-3 1235D 00-3.5847D 01 1 7857D 00 4 1448D-01-6 0922D 00-6 3045D 01
 1.7945D 00-2.5106D-01-1 1002D 01-1 0801D 02 1 7469D 00-1 2412D 00-1 8301D 01
-5.0476D 02 1.7004D 00-1.9961D 00-3 3122D 01 4 5986D 02 1 6362D 00-2 7207D 00
-2.0752D 01-1.8186D 03 1 5647D 00-3 6757D 00-6 2482D 01 1 4599D 03 1 4775D 00
-4.6553D 00-3.2306D 01-3.4949D 03 1 3903D 00-5 7177D 00-9 2031D 01 1 2735D 03
 1.2979D 00-6.9231D 00-7.3482D 01-4 9587D 03 1 2097D 00-8 1366D 00-1 3204D 02
 2.7843D 04 1.1322D 00-8 1627D 00 1.2643D 02-9.5428D 03 1 0776D 00-7 5116D 00
 5.9632D 01-5.6095D 03 1.0000D 00
 0.0000D-01 0.00000-01 7.9117D 00 6 0583D 00 1.0000D 00 3 5527D-01 0 0000D-01
```

```
-4 9235D 01  1 0183D 00  2 8021D-01-2 ?:27D 00  2 19?1D 0?  1 0163D 00  2 00?5D-01
-1 9744D 00  1 0168D 01  1 0320D 00  . ?5?1D-01-1 ?D?4D 00  . ?5?.D 0?  1 03020 ?0
 1 1091D-01-6 0240D-02-5 4457D 00  . ?.?:?  00  1 ?7?1?-0 ?:2 ?-?6?D-0?  1 ?1?D?0 00
 1.0454D 00  9 2407D-02-1 9991D-01  . ?'?:?D 00  1 0?.20 ?? ? ?D?"D-0?.-? 12520-01
 3.2650D 00  1.0554D 00  8 3?97D-02 ? ?-?1:?.?:1 ?2?"5 ?.?  ? 06?.D 00  8 7574D-02
 1 9213D-02  4 5024D-01  1 0688D 00  9 0?2__-?2  ? 5A"1?-02-" 2'92D-01  : 07?50 00
 9 2675D-02-5.5354D-03  2 200:? ??  ? ?:?-?  ?? ? 3?62?-0?  :  ?.?:?.?:? ?:240 00
 1.0925D 00  1 0742D-01  1 9?67D-02-? ?5?"D 0?  1 0?94D 0? ? _0?'?D-02-4 75950-01
 3.7162D 01  1.1021D 00  9 4?'2?-?_  ? 1?2??-01-: 1?50D ?? : 1?4?D 00  6 3?44D-02
-2.4378D 00  8.3468D 01  1.1056D 00  3 5?2?D-02-? 2?5L?-01-1 6?:.? ?_  . .?0?D 00
-1.4539D-02-4 3267D 00  1 1393D 02  1 1052D 00-? 1?44?-02-2 3'92D 00-1 5823D 03
 1 1031D 00-2 7435D-01-2 ?427D 01  7 20'7?  03  : .?000 ??-? 2?25D-0_ 5 9691D 01
-5 5055D 04  1 0943D ?0-1 ?'?:?D ?2-? ?.?'?  ?2  ? ?.?'?D 0?  : ?'?0?D 0?-5 0373D 00
-4 4674D 02  4 2034D 04  1 0000D 00
 5 0000D-01-5 0000D-01  4 3716D-01  . ?1??1  00  ' 0?0?3 00  3 792?D-?1  0 0000D-01
-2.0284D 02  1 0153D 00  " 002?D-02-1 .??'?  ?1  S 2?2-D 02  . 0?.6D 00-9 2?64D-03
 6 5158D 00-1 6752D 03  1 0076D 0?-? ?2?'D-01-4 ?1?4D 0?  : 5336D 03  9 6308D-01
-1 5001D 00  4.7110D 00-2.?7?5D ?2  9 ?2?'D-?1-' 54:7D 00-? 731'D 00  2 62:9D 02
 8.2506D-01-1.5624D 00  5 ?'?6D 0?-" ?.?'?  ??  " ?'?2?D-01-' ?.??.D 00  4 0?9?D-01
 5.6472D 01  6.6075D-01-1 2525D 00  3 9?43D 0?-? 4?'6D 0?  5 7?'?D-0?-' 03:0D 00
 2 1570D 00  6 9618D 00  5 0349D-?1-? ?46?'-0? 2 ?:?8?  0? ? 65?.?-0?  4 43:5D-0?
-6 0421D-01  2.7819D 00  7 0182D 00  4 0?2?D-01-? 4?'75D-0?  3 362'6 00  3 ?:29D 0?
 3 8872D-01  6 5089D-03  5 7?7?D ?? ? _ ?'?  ?1  " 3?56D-0?  5 3?. ?-0?  ? 9?99D 00
 3.2131D 02  4.2708D-01  9 7?44D-0?  ? ?4.4? 0?  2 ?_?5D 02  4 6.?'D-0?  ? 5?88D 00
 2 6476D 01  7.5167D 02  5 06?3D-01  2 ?9420 00  4 3724D 0?  : 1422D 0?  5 6655D-0?
 3 5420D 00  6 7334D ?1  9 0?'6D 03  ? 4-?'?-01  6 1?75D 00  ? 3292D 02-8 0353D 03
 7.5449D-01  8 6?'3D ??  ? 15.2D ?  : ? ?'3D ?5  ? ?3?'D-0?  : ?'?6?'D 0?  : 80:5D 03
-5 0675D 05  1.0990D 00  1 4771D ?1-? ?2.?? 3? ? .?'?D 0?  : :3?6D 00-? 0107D 00
-2.4456D 03  2.3005D 05  1.0000D 00
 1.5000D 00  1 5000D 00  3 3508D 00  3 0579D 00  1 0000D 00-: 4:56D 00  0 0000D-01
 5.6318D 02  9 3763D-01-5 5703D-01  3 1?98D 01-? ?'?62D 01  9 3?04D-01  4 ?'609D-01
 2 8154D 01-5 3895D 02  9 ?3?3D-01  1 0943D 9D  1 0?3?D 01-9 5:24D 02  : 0?07D 00
 8 5651D-01-2.3195D ?1  4 2'?'1D 02  1 03?9D 00  3 1:24D-01-? :88?'D 00  : 2727D 02
 1.0357D 00  3 0695D-01  2 9270D 00-9 3025D 01  1 0544D 00  3 2753D-01-2 :854D 00
 8 7296D-00  1 0710D 00  2 0681D-01-1 ?3?6D 00-? 0193D 00  : 0?13D 00  7 2787D-02
-2 0701D 00  3.2623D 01  1 0?33D 00  1 18'2D-02 5 5'50D-01-8 733:D 00  1 0?54D 00
 2.7923D-02-1.7449D-01-2 1?6?D 01  : 9251D 9D-6 0?63D-02-1 9?00D 00  : 3073D 01
 1.0755D 00-1.7345D-01-9 4200D-01  6 :734D 01  : 0?4?D 00-9 6?40D-02  3 23?0D 00
-1.2135D 03  1 0582D 00-5 2439D-01-3 2400D 01  2 9730D 03  : 0?20D 00-3 2036D-01
 4.7570D 01-5.6662D 03  1.0358D 00-7 2057D-01-8 2451D 01  7 7020D 03  1 0146D 00
-7.7945D-01  7.6754D 01-9 9500D 02  1 0043D 00-9 2068D-01-9 3282D 01  6 4095D 03
 9.8425D-01-1.5996D 00  5.8442D-02-8 0664D 03  9 6293D-01-2 2:72D 00-1 0?65D 02
 6.2418D 04  9.4616D-01-4.9916D-01  4 7478D 02-3 7839D 03  9 5?68D-01  2 73:3D 00
 4.4830D 02-4.2171D 04  1 0000D 00
 0 0000D-01  1.0000D 00  2 1129D 00  8 5851D 00  1 0000D 00-5 5393D 00  0 0000D-01
 1.2735D 03  7.2986D-01-3.5977D 00  7 0323D 01-1 5305D 03  6 3845D-01-2 0939D 00
 1.8502D 01  9.9985D 01  5.7967D-01-1 4235D 00  2 1826D 01-3 8915D 02  5.4031D-01
-8.9675D-01  8.1508D 00-4.2278D 01  5 0980D-01-5 9694D-01  6 4097D 00-4 8262D 01
 4.8762D-01-3.4465D-01  4.0906D 00-3 3085D 01  4 7394D-01-1 6?81D-01  2 2723D 00
-1.9057D 01  4 6695D-01-6.4363D-02  1 0699D 00-7 9714D 00  4 6459D-01-7 8173D-03
 4.9311D-01  4.3231D 00  4.6594D-01  4 5923D-02 8 4131D-01-1 7504D 00  4 7257D-01
 1.1029D-01  6.9459D-01-4.0322D 00  4 8371D-01  1 5399D-01  3 6066D-01  8 5443D 00
 4.9746D-01  2.0798D-01  1.0260D 00  4.3941D 01  5.1612D-01  3 7765D-01  3 9955D 00
-4.4543D 02  5.2705D-01  3.0296D-01-9 0832D 00  1 2217D 03  5 3588D-01  5 0061D-01
```

```
1 37780 01-2 40950 03 5 48780D-01 4 1.5530-01 1 .5.1. 0. 1 5.1. 0 .. 5 56.30D-01
5 94530-01 4 91845 01-2 27290 02 3 1.751 11 1 .. 1.. 1.. 1 1.. 0 .. 1 .5080 03
5 92820-01 2.97290 00 1 15600 02 4 12.71 02 5 .75.1-9. 1 ..-.50 00 .75.70 02
. 97760 05 6 76735-01 4 27420 1.. 1 1.1.5 .1 1 .. 1.1 1.. .. .1.1 1 1.1.. 1 1
1 20660 03-1 13090 05 1 00000 00
0 00000-01 0 00000-01 0 00070-01 .1.1.1 11 1 1.1.1 1.. .1 1.1.. 1 .1.1 0 .1.00-1.
1 09030-01 1 00051 20 0 1.1.20 1. 1 .1. 11 .1 1.1 1 .. 1 1.1.
1 09105-01 0 00000-11 1 96.70 00 1 .1.1.1 .. 1 1.1.1 1 1.1.1 1 1.1.1 1 1
3 05000-01 0 00090-01 0 00000-01 1 0.0000 .0 1 .1.1.1.1 1 1.1 1.1.1 1 .0.1.1 1 1
1 00000 00 0.00000-01 0 .0000D-01 1 00.11 .1 1 1.1.1.1 1 1.1 1.1.1 1 1.1.1 1 1
1 03000-01 1 00000 00 0 00000-01 0 1.1.01 .1 1 1.1.1.1 1 1.1 1.1.1 1 1.1.1 1 1
0 00000-01 1 00090 00 1 00000 00 0 00000-01 1 00.1.1 1 1 1.1.1.1 1 1.1.1 1 1
1 00000-01 0 00090 00 0 00000-01 1 00000 00 0 1.1.01 1 1 1.1.1.1 1 1.1.1 1 1
1 00000 00 0 00000-01 0 00000-01 1 00.1.1 .1 1 1.1.1.1 1 1.1 1.1.1 1 1.1.1 1 1
0 00000-01 0 00000-01 1 00000 00 0 00000-01 1 00.1.1 1 1 1.1.1.1 1 1.1 1.1.1 1 1
0 00000-01 0 00000-01 1 00000 00 0 00000-01 1 00.1.1 1 1 1.1.1.1 1 1.1 1.1.1 1 1
0 00000-01 1.00000 00 0 00000-01 0 00000-01 1 00.1.1 1 1 1.1.1.1 1 1.1 1.1.1 1 1
0 00000-01 0 00000-01 1.00000 00
0 00000-01 0.00000-01 0 00000-01 0 01.1.1 1 1 1.1.1.1 1 1.1 1.1.1 1 1.1.1 1 1
0 00000-01 1 00000 00 0.00000-01 0 00.1.1 1 1 1.1.1.1 1 1.1 1.1.1 1 1.1.1 1 1
0 00000-01 0 00000-01 1 00000 00 0 00000-01 1 00.1.1 1 1 1.1.1.1 1 1.1 1.1.1 1 1
0 00000-01 0 00000-01 0.00000-01 1 00000 00 0 00000-01 1 00.1.1 1 1 1.1.1.1 1 1.1
0 00000-01 1.00000 00 0.00000-01 0 00000-01 1 00.1.1 1 1 1.1.1.1 1 1.1 1.1.1 1 1
0 00000-01 0 00000-01 1 00000 00 0 00000-01 1 00.1.1 1 1 1.1.1.1 1 1.1 1.1.1 1 1
0 00000-01 0.00000-01 0.00000-01 1 00000 00 0 00000-01 1 00.1.1 1 1 1.1.1.1 1 1.1
0 00000-01 1.00000 00 0.00000-01 0 00000-01 1 00.1.1 1 1 1.1.1.1 1 1.1 1.1.1 1 1
0 00000-01 0 00000-01 1 00000 00 0 00000-01 1 00.1.1 1 1 1.1.1.1 1 1.1 1.1.1 1 1
0 00000-01 0 00000-01 0.00000-01 1 00000 00 0 00000-01 1 00.1.1 1 1 1.1.1.1 1 1.1
```

```
 1.0000D 00 0.0000D-01 0.0000D-01 0.0000D-01 1 0000D 00 0 0000D-01 0 0000D-01
 0.0000D-01 1.0000D 00 0.0000D-01 0 0000D-01 0.0000D-01 1 0000D 00 0 0000D-01
 0.0000D-01 0.0000D-01 1.0000D 00 0 0000D-01 0.0000D-01 0 0000D-01 1 0000D 00
 0.0000D-01 0 0000D-01 0.0000D-01 1 0000D 00 0 0000D-01 0 0000D-01 0 0000D-01
 1.0000D 00 0.0000D-01 0.0000D-01 0 0000D-01 1 0000D 00 0.0000D-01 0 0000D-01
 0.0000D-01 1.0000D 00 0.0000D-01 0.0000D-01 0 0000D-01 1 0000D 00 0 0000D-01
 0.0000D-01 0.0000D-01 1.0000D 00 0 0000D-01 0 0000D-01 0 0000D-01 1.0000D 00
 0.0000D-01 0 0000D-01 0 0000D-01 1 0000D 00 0 0000D-01 0 0000D-01 0 0000D-01
 1.0000D 00 0.0000D-01 0.0000D-01 0.0000D-01 1.0000D 00 0 0000D-01 0 0000D-01
 0.0000D-01 1.0000D 00 0.0000D-01 0 0000D-01 0 0000D-01 1.0000D 00 0 0000D-01
 0.0000D-01 0.0000D-01 1.0000D 00
 1.0000D 00 0.0000D-01 6.5525D-01 1 5490D 00 1 0000D 00-2 6181D 00 0 0000D-01
 6.8669D 02 8.7470D-01-1.5711D 00 3.7919D 01-6 4208D 01 8 4282D-0.-3 2404D-01
 3.5745D 01-1.8197D 03 8.4066D-01-1 4142D-01-2.4760D 01 2 9911D 02 8 2257D-01
-8.2684D-01-1.4248D 01 3.5164D 02 7 8053D-01-1 1154D 00 2.3314D-01 2.4512D 01
 7.2765D-01-1.0759D 00 1.4110D 00 1 6351D 01 6.7110D-01-9 7368D-01 2.3096D 00
-1.0059D 01 6.1384D-01-8.4797D-01 1.6749D 00 4 1586D 00 5 5713D-01-7.1589D-01
 1.9758D 00 6.5245D 00 5.0645D-01-5 3559D-01 2.5013D 00 4.3902D 00 4 7077D-01
-3.1051D-01 2.8693D 00 1.4732D 00 4.5504D-01-6 7836D-02 2 9913D 00 2.6381D 01
 4.6090D-01 2.4507D-01 5.0455D 00 6.3283D 01 4 9224D-01 7 3056D-01 9.3222D 00
-5 3931D 01 5.1748D-01 9.8103D-01 7 7387D 00 5 0849D 02 5 4832D-01 1 3732D 00
 2.1417D 01-3.0124D 02 5.8486D-01 1 7853D 00 1 4504D 01 1 2425D 03 6 2669D-01
 2 3505D 00 4.0188D 01-1.8428D 01 6 7271D-01 3 0346D 00 3 9873D 01 2.6119D 03
 7 2249D-01 3.8925D 00 7.7917D 01 4.0116D 03 7 7499D-01 5.0923D 00 1.2529D 02
 1.7900D 04 8.3005D-01 7.0267D 00 2 9146D 02 1 0785D 04 8 8698D-01 9 3399D 00
 3 6695D 02-3.4518D 04 1.0000D 00
 0.0000D-01 0 0000D-01 2.0913D 00 3 4460D 00 1 0000D 00-1.0530D 00 0 0000D-01
 1 5306D 02 9.4615D-01-8.1961D-01 8.4513D 00-1 2822D 02 9 2241D-01-6 0694D-01
 4.1104D 00 3.4115D 01 9 0472D-01-4 5141D-01 5 2447D 00-7 3467D 01 8 9156D-01
-3 1247D-01 2.6629D 00-4 0167D 01 8 8048D-01-2.3687D-01 1 0087D 00 1 5024D 01
 8 7054D-01-1.7105D-01 1.7306D 00-2 3230D 01 8.6311D-01-1 1102D-01 4 5396D-01
-3.1337D 00 8 5698D-01-8.8615D-02 2 5622D-01 2.7570D 00 8 5131D-01-6 2859D-02
 4.5571D-01-3 1011D 00 8 4746D-01-3 6213D-02 2 0593D-01 1 9197D 00 8 4533D-01
-1 2209D-02 3.6683D-01-4.7355D-01 8 4554D-01 1 6546D-02 3 2761D-01 5 8439D 00
 8 4828D-01 5.9775D-02 7.8267D-01 1 8901D 01 8 5508D-01 1 5583D-01 2 0600D 00
-2 9418D 01 8 6042D-01 2.0363D-01 1 1962D 00 1 7403D 02 8 6689D-01 2 9877D-01
 5 8774D 00-1.8539D 02 8 7492D-01 3 8483D-01 1 6233D 00 6 5470D 02 8 8419D-01
 5 5825D-01 1.5156D 01-2.7010D 02 8 9571D-01 7 7782D-01 1 0541D 01 1 3205D 03
 9 0884D-01 1.0714D 00 2 9775D 01 9 2554D 02 9 2382D-01 1 4876D 00 4 0705D 01
 9.7454D 03 9.4069D-01 2 2854D 00 1 3117D 02 1 9059D 03 9 6001D-01 3 2502D 00
 1.4451D 02-1 3594D 04 1 0000D 00
```

```
 RETRIEVAL FILE NO  TP5-05-2
       FILE SIZE =   24
       L/D       =    9.5000
       ALFA      =    1.1250
 0.0000D-01 6.9984D-02 1 4103D-01 2 1414D-01 3 9017D-01 3 6664D-01 4 4491D-01
 5 1800D-01 5.7868D-01 6.4028D-01 7 6132D-01 7 5836D-01 9 1154D-01 8 5850D-01
 8.9776D-01 9.1520D-01 9.3088D-01 9 4431D-01 * 5627D-01 * 6661D-01 9 7531D-01
 9.8250D-01 9.8822D-01 1.0000D 00
 1 0000D 00 0.0000D-01 4.5726D-01 9 6554D-01 1 0000D 00-1 5259D 00 0 0000D-01
 7 2285D 01 8 9734D-01-1 3489D 00 5 0590D 00-4 5967D 01 8 1154D-01-1 1052D 00
 1.8001D 00-2.6090D 00 7 3538D-01-9 6060D-01 1 **** 00 1 *194D 01 6 6639D-01
-8 0280D-01 3 0684D 00-2.7430D 01 6 1242D-01-6 4874D-01 9 7042D-01 1 8237D 01
 5 6610D-01-5.1653D-01 2 3977D 00 4 6*1* 01 5 3*86D-01-2 1627D-01 5 8196D 00
-1 1103D 02 5 3126D-01-6 7500D-02-9 1207D-01 4 9994D 01 5 2731D-01-2 9204D-02
 2 1615D 00 1.5424D 01 5 2013D-01 1 7.31D-01 7 1627D 00 2 6764D 01 5 4774D-01
 3.5700D-01 4.7358D 00 2 4209D 01 5 6*70D-01 6 4695D-21 6 6111D 00 . 1108D 02
 6 0831D-01 1.0449D 00 1 1228D 01 9 8991D 01 6 5847D-01 1 5234D 00 1 3151D 01
 2 2260D 02 6.6724D-01 1.7866D 00 1 7034D 01 9 7253D 02 7 1796D-01 2 1733D 00
 3 2286D 01-4.1082D 02 7.4991D-01 2 5693D 00 2 6769D 01 1 3738D 03 7 8295D-01
 2 9882D 00 4.3198D 01 2 0595D 03 3 1653D-01 2 5449D 00 6 4491D 01 2 7732D 03
 8.5013D-01 4.2112D 00 8.9627D 01 1 1054D 04 8 8337D-01 5 1335D 00 1 6806D 02
 1.0073D 04 9.1583D-01 6.2611D 00 2 2574D 02-1 9170D 04 1 0000D 00
 0.0000D-01 0 0000D-01 0 0000D-01 0 0000D-01 1 0000D 00 0 0900D-01 0 0000D-01
 0.0000D-01 1.0000D 00 0.0000D-01 0 0000D-01 0 0000D-01 1 0000D 00 0 0000D-01
 0.0000D-01 0.0000D-01 1 0000D 00 0 0000D-01 0 0000D-01 1 0000D 00 1 0000D 00
 0 0000D-01 0 0000D-01 0.0000D-01 1 0000D 00 0 0000D-01 0 0000D-01 0 0000D-01
 1.0000D 00 0.0000D-01 0 0000D-01 0 0000D-01 1 0000D 00 0 0000D-01 0 0000D-01
 0.0000D-01 1 0000D 00 0.0000D-01 0 0000D-01 0 0000D-01 1 0000D 00 0 0000D-01
 0.0000D-01 0.0000D-01 1 0000D 00 0 0000D-01 0 0000D-01 1 0000D 00 1 0000D 00
 0 0000D-01 0 0000D-01 0.0000D-01 1 0000D 00 0 0000D-01 0 0000D-01 0 0000D-01
 1.0000D 00 0.0000D-01 0 0000D-01 0 0000D-01 1 0000D 00 0 0000D-01 0 0000D-01
 0.0000D-01 1.0000D 00 0.0000D-01 0 0000D-01 0 0000D-01 1 0000D 00 0 0000D-01
 0.0000D-01 0 0000D-01 1 0000D 00 0 0000D-01 0 0000D-01 0 0000D-01 1 0000D 00
 0 0000D-01 0.0000D-01 0.0000D-01 1 0000D 00 0 0000D-01 0 0000D-01 1 0000D-01
 1.0000D 00 0.0000D-01 0 0000D-01 0 0000D-01 1 0000D 00 0 0000D-01 0 0000D-01
 0.0000D-01 1.0000D 00 0.0000D-01 0 0000D-01 0 0000D-01 1 0000D 00 0 0000D-01
 0.0000D-01 5.0000D-01 1 8747D 01 6 0662D 00 1 0000D 00 1 4460D 00 0 0000D-01
-3.7580D 01 1 0991D 00 1 3540D 00-2 6300D 00 2 8785D 01 1 1903D 00 1 2298D 00
-5.8495D-01-2.2267D 00 1 2793D 00 1 1911D 00-7 4777D-01 5 9169D 00 1 3681D 00
 1.1513D 00-2.9794D-01-1 6247D 00 1 4551D 00 1 1238D 00-4 2220D-01-2 8019D 00
 1.5416D 00 1.0822D 00-6.4149D-01 2 9495D 01 1 6209D 00 1 1141D 00 . 5144D 00
-5 9694D 01 1.6890D 00 1.0960D 00-2 1062D 00-1 3679D 01 1 7520D 00 9 4022D-01
-2.9507D 00-4 4444D 01 1 9022D 00 6 7756D-01-5 6617D 00-7 *247D 01 1 0296D 00
 2 3508D-01-9.7067D 00-1 7711D 02 1 8242D 00-5 2195D-01-1 9036D 01-1 3601D 02
 1.7763D 00-1.5666D 00-2.5452D 01-6 1378D 02 1 6890D 00-3 0387D 00-4 9546D 01
-8.3933D 02 1.6278D 00-4 0305D 00-6 4186D 01 1 1*.8D 03 1 5574D 00-4 8919D 00
-4.5652D 01-4.1181D 03 1.4859D 00-5 8763D 00-1 0096D 02-8 1341D 02 1 4082D 00
-7.1418D 00-1.1068D 02-4 3504D 02 1 3284D 00-8 3693D 00-1 1518D 02-7 4044 03
 1 2509D 00-9.5921D 00-1 7960D 02 2 9882D *4 1 1792D 00-1 0111D 01 3 5128D 01
-1.3847D 04 1.1214D 00-1 0137D 01-4 4168D 01 7 75*5D 07 1 0000D 00
 0 0000D-01 0 0000D-01 6 6249D 00 5 4362D 00 1 0000D 00 2 7150D-01 0 0000D-01
-1.1800D 01 1 0183D 00 2.4260D-01-8 2578D-01 5 5*13D 00 1 0338D 00 1 9792D-01
-4 3210D-01 8 7803D-01 1 0472D 00 1 6643D-01-3 6791D-01 1 4873D 00 1 0590D 00
 1.4500D-01-2 5484D-01-3.8788D-01 1 0694D 00 1 2438D-01-2 8451D-01 2 9133D 00
```

```
 1 07940 00 1 08890-01-1 1128D-01-5 96500 00 1 08570 00 8 47690-02-5 48740-01
 1 03220 01 1 09020 00 7 0475D-02 7 78590-02-3 60390 00 1 09450 00 6 84220-02
-1 44340-01 1.42250 00 1.09850 00 6 22640-02-5 75750-02-7 23010 00 . .0190 00
 5 35930-02-2 43570-01 4 09100 00 1 10470 00 4 64390-02-2 80740-02-2 38810 01
 1 10620 00 1.87840-02-1 14960 00-. 67240 00 1 10600 00-2 76330-02-1 21530 00
-2.96650 01 1 10530 00-5 9428D-02-2 43040 00-1 27500 01 1 10410 00-9 91130-02
-2 63040 00-5.14760 02 1 10230 00-1 63860-01-9 54240 00 6 28340 02 1 09960 00
-2 50050-01-2.02910 00-2 22930 03 1 03650 00-3 90170-0.-2 5677D 01 6 89070 03
 1 09290 00-3.47450-01 3 48960 01-6 56410 94 1 08740 00-1 73980 00-4 22420 02
-4 13870 03 1.07040 00-4 22600 00-4 46120 02 2 78630 04 1 00000 00
 0 00000-01-5 00000-01 5 98830-01 2 45670 00 1 00000 00-1 24220 00 0 00000-01
 4 12550 01 9.11930-01-1.1911D 00 2 69710 00-4 22520 01 8 32060-01-1 09270 00
-1.14695-01 9 05600 00 7 5247D-01-1 07280 10 5 47360-01-9 52690 00 6 71490-01
-1 06280 00-1 76870-01 6 20450 00 5 96150-01-1 05400 00 2 02290-01 3 15590 01
 5 10800-01-9 37640-01 2 7723D 00-. 03470 00 4 49590-01-7 78540-01 2 67470 00
 1 13770 02 4.13930-01-3 6672D-01 9 57870 00-1 80600 02 4 02460-01-1 19760-01
-1.55940 00 5 15440 01 3 9421D-01-1 18930-01 1 56560 00 1 74040 01 3 90540-01
 1 2292D-03 2.58790 00 4 13760 01 3 9521D-01 1 34950-01 4 76740 00 9 78500 01
 4 11310-01 5 26760-01 9 7628D 00 3 [illegible] 43170-01 . 19770 00 2 48210 01
 7 2782D 02 4 68480-01 1 7412D 00 3 75140 01 1 00020 03 5 01050-01 2 45370 00
 5.3328D 01 4 79490 03 5 4075D-01 3 00140 00 1 17590 02 1 06380 04 5 95250-01
 5.7682D 00 2.44800 02 5 4798D 03 6 69980-01 6 59190 00 3 01450 02 1 04920 05
 7 6671D-01 1 51890 01 1 2146D 03-3 57460 05 6 85.10-01 1 46680 01-1 3540D 03
 6.9329D 04 9.49190-01 8.0714D 00-9 5702D 02 6 12680 04 1 00000 00
 0 0000D-01 1 50000 00 9 9365D-01 2 99430 00 . 00000 00-6 64880-01 0 00000-01
-6 5662D 01 9.3432D-01-1 0457D 00-4 59530 00 1 70960 02 8 58600-01-9 42960-01
 7 4869D 00-5.6005D 01 8 0602D-01-5 45280-01 3 3926D 00 1 07010 01 7 75160-01
-2 5646D-01 4.2061D 00-4.8600D 01 7 64220-01-7 69060-02 4 88860-01 2 4373D 01
 7.6164D-01 3.6003D-02 2.3964D 00 1 93910 02 7 83300-01 7 29130-01 1 65700 01
-3 8258D 02 8.4380D-01 1.0302D 00-6 64720 00 7 69950 01 8 97700-01 7 70610-01
-1.7812D 00-1.6565D 00 9.4136D-01 6 59830-01-1 89230 00 2 02260 01 9 76820-01
 5 8403D-01-7.1749D-01-1.7185D 02 4 00240 00 7 07810-01-9 76970 00 4 1140E 02
 1 0132D 00 3 0270D-01 9.5521D 00-9 03000 02 1 02700 00-4 1177D-02-2 79730 01
-6 8208D 02 1.0176D 00-6 1714D-01-3 89690 01 7 59770 03 1 00800 00-2 93930-01
 8 0187D 01-1.1572D 04 1.0066D 00-2 60600-01-7 52230 01 1 33710 03 9 98500-01
-1 0645D 00-5.9233D 01 4 2130D 03 9 05100-01-1 45180 00-1 56760 01-1 35700 04
 9 7038D-01-2 1022D 00-1 3379D 02 8 92340 04 9 56970-01-9 .4610-01 4 64320 02
-2 7556D 03 9.5926D-01 1 6991D 00 4 46540 02-3 80890 04 . 00000 00
 0 0000D-01 1.0000D 00 3 4166D 00 8 39450 00 1 00000 00-3 19180 00 0 00000-01
 3.2632D 02 7.9527D-01-2 3927D 00 2 28370 01-2 31450 02 6 69080-01-1 35430 00
 6 3934D 00-1.5649D 01 5 8613D-01-9 29240-01 5 25000 00-2 72650 01 5 28700-01
-6 0842D-01 3.1774D 00-1 6815D 01 4 9921D-01-4 14570-01 1 89130 00-1 05520 01
 4 6271D-01-2.9887D-01 1.0655D 00 6 30090 01 4 47810-01-5 26840-02 5 67090 00
-9 7433D 01 4 5143D-01 1.1205D-01-2 41810-01 1 80490 01 4 58600-01 1 32530-01
 9 0696D-01 3.7092D 00 4 6851D-01 1 94760-01 1 1332D 00 1 49080 01 4 82080-01
 2 8473D-01 1 9917D 00-4.4992D 01 4 98740-01 3 2722D-01-3 7835D-01 1 7742D 02
 5 1676D-01 5 0512D-01 7.9542D 00-3 01150 02 5 39680-01 5 85330-01-3 86720 00
-4.2892D 02 5.4892D-01 4.5264D-01-1 13480 01 3 93050 03 5 5715D-01 7 5803D-01
 5 0294D 01-1 8274D 03 5 7113D-01 1 2687D 00 2 57520 01 2 0522D 03 5 8673D-01
 1.7234D 00 5.0294D 01 1 0670D 04 6 11200-01 2 81360 00 1 6061D 02 3 57830 03
 6 4216D-01 4.3470D 00 1.9175D 02 1 2524D 05 6 8809D-01 8 9584D 00 1 0917D 03
 3 0926D 04 7 5626D-01 1.5717D 01 1 2668D 03-1 0774D 05 1 0000D 00
 0.0000D-01 0.0000D-01 0 0000D-01 0 0000D-01 1 0000D 00 0 0000D-01 0 0000D-01
 0.0000D-01 1.0000D 00 0 0000D-01 0 0000D-01 0 0000D-01 1 0000D 00 0 0000D-01
```

```
0.00000D-01 0.00000D-01 1.00000D 00 0 00000-01 0 00000-01 0 00000-01 1 00000 00
0.00000D-01 0.00000D-01 0.00000D-01 1 00000 00 0 00000-01 0 00000-01 0 00000-01
1.00000D 00 0.00000D-01 0.00000D-01 0 00000-01 1 00000 00 0 00000-01 0 00000-01
0.00000D-01 1.00000D 00 0.00000D-01 0 00000-01 0 00000-01 1 00000 00 0 00000-01
0.00000D-01 0.00000D-01 1.00000D 00 0 00000-01 0 00000-01 0 00000-01 1 00000 00
0.00000D-01 0.00000D-01 0.00000D-01 1 00000 00 0 00000-01 0 00000-01 0 00000-01
1.00000D 00 0.00000D-01 0.00000D-01 0 00000-01 1 00000 00 0 00000-01 0 00000-01
0.00000D-01 1.00000D 00 0.00000D-01 0 00000-01 0 00000-01 1 00000 00 0 00000-01
0.00000D-01 0.00000D-01 1 00000 00 0 00000-01 0 00000-01 0 00000-01 1 00000 00
0.00000D-01 0.00000D-01 0.00000D-01 1 00000 00 0 00000-01 0 00000-01 0 00000-01
1.00000D 00 0.00000D-01 0.00000D-01 0 00000-01 1 00000 00 0 00000-01 0.00000-01
0.00000D-01 1.00000D 00 0.00000D-01 0 00000-01 0 00000-01 1 00000 00
0 00000D-01 0.00000D-01 0.00000D-01 0 00000-01 1 00000 00 0 00000-01 0 00000-01
0.00000D-01 1 00000 00 0.00000D-01 0 00000-01 0 00000-01 1 00000 00 0 00000-01
0.00000D-01 0.00000D-01 1.00000D 00 0 00000-01 0 00000-01 0 00000-01 1 00000 00
1.00000D 00 0.00000D-01 0.00000D-01 0 00000-01 1 00000 00 0 00000-01 0 00000-01
0 00000D-01 1.00000D 00 0.00000D-01 0 00000-01 0 00000-01 1 00000 00 0 00000-01
0 00000D-01 0.00000D-01 1 00000 00 0 00000-01 0 00000-01 0 00000-01 1 00000 00
0 00000D-01 0.00000D-01 0.00000D-01 1 00000 00 0 00000-01 0 00000-01 0 00000-01
1.00000D 00 0.00000D-01 0.00000D-01 0 00000-01 1 00000 00 0 00000-01 0 00000-01
0 00000D-01 1.00000D 00 0 00000-01 0 00000-01 1 00000 00 0 00000-01 0 00000-01
0 00000D-01 0.00000D-01 1.00000D 00 0 00000-01 0 00000-01 0 00000-01 1 00000 00
0 00000D-01 0.00000D-01 0.00000D-01 1 00000 00 0 00000-01 0 00000-01 0 00000-01
1.00000D 00 0.00000D-01 0.00000D-01 0 00000-01 1 00000 00 0 00000-01 0 00000-01
0 00000D-01 1.00000D 00 0.00000D-01 0 00000-01 0 00000-01 1 00000 00
0.00000D-01 0 00000D-01 0.00000D-01 0 00000-01 1 00000 00 0 00000-01 0 00000-01
0.00000D-01 1.00000D 00 0.00000D-01 0 00000-01 0 00000-01 1 00000 00 0.00000-01
0.00000D-01 0.00000D-01 1 00000D 00 0 00000-01 0 00000-01 0 00000-01 1.00000D 00
0.00000D-01 0.00000D-01 0.00000D-01 1 00000 00 0 00000-01 0 00000-01 0 00000-01
1.00000D 00 0.00000D-01 0.00000D-01 0 00000-01 1 00000 00 0 00000-01 0 00000-01
0 00000D-01 1.00000D 00 0.00000D-01 0 00000-01 0 00000-01 1 00000 00 0 00000-01
0.00000D-01 0.00000D-01 1.00000D 00 0 00000-01 0 00000-01 0 00000-01 1 00000 00
0.00000D-01 0.00000D-01 0.00000D-01 1 00000 00 0 00000-01 0 00000-01 0 00000-01
1 00000D 00 0.00000D-01 0.00000D-01 0.00000-01 1 00000 00 0 00000-01 0 00000-01
0 00000D-01 1.00000D 00 0.00000D-01 0 00000-01 0 00000-01 1 00000 00 0 00000-01
0.00000D-01 0.00000D-01 1.00000D 00 0 00000-01 0 00000-01 0 00000-01 1 00000 00
0.00000D-01 0 00000D-01 0 00000D-01 1 00000 00 0 00000-01 0 00000-01 0 00000-01
1 00000D 00 0.00000D-01 0 00000D-01 0 00000-01 1 00000 00 0 00000-01 0 00000-01
0.00000D-01 1.00000D 00 0.00000D-01 0 00000-01 0 00000-01 1 00000 00
0.00000D-01 0.00000D-01 0.00000D-01 0 00000-01 1 00000 00 0 00000-01 0 00000-01
0.00000D-01 1.00000D 00 0.00000D-01 0 00000-01 0 00000-01 1 00000 00 0 00000-01
0.00000D-01 0.00000D-01 1.00000D 00 0 00000-01 0 00000-01 0 00000-01 1 00000 00
0.00000D-01 0.00000D-01 0.00000D-01 1 00000 00 0 00000-01 0 00000-01 0 00000-01
1.00000D 00 0 00000D-01 0 00000D-01 0 00000-01 1 00000 00 0 00000-01 0 00000-01
0.00000D-01 1.00000D 00 0.00000D-01 0 00000-01 0 00000-01 1 00000 00 0 00000-01
0.00000D-01 0.00000D-01 1 00000D 00 0 00000-01 0 00000-01 0 00000-01 1 00000 00
0.00000D-01 0.00000D-01 0.00000D-01 1 00000 00 0 00000-01 0 00000-01 0 00000-01
1 00000D 00 0.00000D-01 0 00000D-01 0 00000-01 1 00000 00 0 00000-01 0 00000-01
0 00000D-01 1.00000D 00 0.00000D-01 0 00000-01 0 00000-01 1 00000 00 0 00000-01
0.00000D-01 0.00000D-01 1.00000D 00 0 00000-01 0 00000-01 0 00000-01 1.00000D 00
0 00000D-01 0.00000D-01 0 00000D-01 1 00000 00 0 00000-01 0 00000-01 0 00000-01
1 00000D 00 0 00000D-01 0 00000D-01 0 00000-01 1 00000 00 0 00000-01 0 00000-01
0 00000D-01 1.00000D 00 0.00000D-01 0 00000-01 0 00000-01 1 00000 00
```

```
 0 0000D-01 0.0000D-01 9.9637D-01 4 2913D 00 1 0000D 00-3 7207D 00 0 0000D-01
 4 9861D 02 7.6809D-01-2.4997D 00 3 4895D 01-4 1014D 02 6 5405D-01-1 0557D 00
 5.7557D 00-7.0876D 00 5.9179D-01-6 5385D-01 5 2876D 00-3 0934D 01 5.5496D-01
-3 4508D-01 2.8860D 00-2.1564D 01 5.3540D-01-1 8741D-01 1 2367D 00 1 4239D 01
 5.2565D-01-4.7013D-02 2.3511D 00 3.2438D 01 5 3061D-01 2 1148D-01 4.7220D 00
-9.4205D 01 5.4863D-01 3.2457D-01-9 9479D-01 2.3784D 01 5 6766D-01 3 0842D-01
 4.7027D-01 5.8057D 00 5 8757D-01 3 4790D-01 8 2c48D-01 2 0941D 01 6 0963D-01
 4.3009D-01 2.0302D 00-6.3484D 00 6 3495D-01 5 2823D-01 1 6958D 00 9 9441D 01
 6.6335D-01 7.1754D-01 6.3660D 00 6 1453D 01 6 9704D-01 1 0148D 09 8 7783D 00
-6 8920D 01 7.1601D-01 1.1574D 00 7 5762D 00 1 6883D 03 7 2618D-01 1 4839D 00
 3.4054D 01-8.4333D 02 7.5884D-01 1 8652D 00 2.2729D 01 1 6363D 03 7 8324D-01
 2.2540D 00 4.2296D 01 4.4545D 03 8.0962D-01 2 9293D 00 8 8349D 01 1 7163D 03
 8.3865D-01 3.7632D 00 1.0329D 02 2 4671D 04 8 6988D-01 5 1424D 00 2 8057D 02
 7.4022D 03 9.0416D-01 6.8705D 00 3 2296D 02-2.7425D 04 1 0000D 00
 0.0000D-01 0 0000D-01 3.4163D 00 6 3168D 00 1 0000D 00-1 1300D 00 0 0000D-01
 9.6094D 01 9.2641D-01-8.9464D-01 6 7250D 00-5 8623D 01 8 7632D-01-5.6481D-01
 2.5601D 00-6.1640D 00 8.4147D-01-3.9412D-01 2.1095D 00-1 0158D 01 8 1686D-01
-2.6311D-01 1.3373D 00-4.4599D 00 8 0031D-01-1 7387D-01 9 9613D-01-7 9338D 00
 7 8912D-01-1.2021D-01 3.7519D-01 2 3651D 01 7 828.D-01-2 9612D-02 2 1039D 00
-3 4144D 01 7.6368D-01 3 5193D-02 3 1894D-02 5 1876D 00 7 8611D-01 4 7000D-02
 3 5144D-01 7.9269D 00 7.8993D-01 8 3183D-02 8 3496D-01 3 1934D 00 7 9621D-01
 1 3656D-01 1.0189D 00 5.4224D 00 8 0495D-01 1 9778D-01 1 3045D 00 5 7107D 01
 8 1666D-01 3.2199D-01 3 9865D 00 1 1692D 01 8 3249D-01 4 8749D-01 4 4455D 00
 1 6196D 02 8.4181D-01 5.8966D-01 7 2703D 00 5 9042D 02 8 5233D-01 7 7630D-01
 1.6530D 01-5 5740D 01 8.6423D-01 9 9326D-01 1 5781D 01 8 6882D 02 8 7748D-01
 1 2441D 00 2.6171D 01 1.8482D 03 8 9208D-01 1 6135D 00 4 5279D 01 2 5634D 03
 9 0812D-01 2.1046D 00 6.7589D 01 1 2621D 04 9 2577D-01 2 9162D 00 1 5828D 02
 5.3246D 03 9.4523D-01 3 9099D 00 1 8077D 02-1 6030D 04 1 0000D 00
```

```
 RETRIEVAL FILE NO  TP5-05-3
       FILE SIZE =   23
       L/D       =    0.5000
       ALFA      =    1.1250
 0.0000D-01 9.5020D-02 1.8839D-01 2 7944D-01 3 6664D-01 4 4755D-01 5 2582D-01
 5.9773D-01 6.6350D-01 7.2343D-01 7 7608D-01 8 2325D-01 8 6214D-01 8 9590D-01
 9 2460D-01 9.3686D-01 9 4810D-01 9 5811D-01 9 6686D-01 9 7449D-01 9 8091D-01
 9 8625D-01 1.0000D 00
 1 0000D 00 0.0000D-01 3 3364D-01 9 5603D-01 1 0000D 00-1 4088D 00 0 0000D-01
 4 8925D 01 9 7313D-01-1.1880D 00 4 6488D 00-3 4369D 01 7 7781D-01-9 0372D-01
 1.4397D 00 1.9865D 00 7 0175D-01-7 6441D-01 1 6206D 00 6 7112D 00 6 4199D-01
-5 9757D-01 2.2058D 00-2 7360D 01 5 9844D-01-5 0872D-01-9 5120D-03 2 7822D 01
 5 6082D-01-4 2425D-01 2 1630D 00-3 0620D 00 5 3573D-01-2 .626D-01 1 9478D 00
 5 9452D 00 5 2205D-01-1 2536D-01 2 3318D 00 4 0317D 01 5 1959D-01 7 7264D-02
 4 7550D 00-1 3405D 01 5 2492D-01 3 0802D-01 4 0493D 00 1 4407D 02 5 5152D-01
 6 6034D-01 1.0846D 01-7 4876D 00 5 8533D-01 1 0745D 00 1 0555D 01 1 4880D 02
 6 2864D-01 1.5175D 00 1 5577D 01 4 3707D 02 6 8033D-01 2 1446D 00 2 8122D 01
-1 6590D 02 7.0871D-01 2.4771D 00 2 6087D 01 1 3141D 03 7 3851D-01 2 8533D 00
 4 0856D 01 1.5454D 03 7 6935D-01 3 3394D 00 5 6210D 01 1 1621D 03 8 0098D-01
 3 8769D 00 6.6499D 01 5 9510D 02 8 3280D-01 4 5567D 00 1 1185D 02 7 4678D 03
 8 6470D-01 5.4299D 00 1 5981D 02 1 3520D 04 8 9634D-01 6 4761D 00 2.3206D 02
-1.6879D 04 1.0000D 00
 0.0000D-01 0.0000D-01 0 0000D-01 0 0000D-01 1 0000D 00 0 0000D-01 0 0000D-01
 0.0000D-01 1.0000D 00 0 0000D-01 0 0000D-01 0 0000D-01 1 0000D 00 0 0000D-01
 0.0000D-01 0.0000D-01 1 0000D 00 0 0000D-01 0 0000D-01 0 0000D-01 1 0000D 00
 0.0000D-01 0.0000D-01 0.0000D-01 1 0000D 00 0 0000D-01 0 0000D-01 0 0000D-01
 1.0000D 00 0.0000D-01 0.0000D-01 0.0000D-01 1 0000D 00 0 0000D-01 0 0000D-01
 0.0000D-01 1.0000D 00 0.0000D-01 0.0000D-01 0 0000D-01 1.0000D 00 0 0000D-01
 0.0000D-01 0.0000D-01 1.0000D 00 0 0000D-01 0 0000D-01 0 0000D-01 1 0000D 00
 0.0000D-01 0.0000D-01 0.0000D-01 1 0000D 00 0 0000D-01 0 0000D-01 0.0000D-01
 1.0000D 00 0 0000D-01 0.0000D-01 0 0000D-01 1 0000D 00 0 0000D-01 0 0000D-01
 0.0000D-01 1.0000D 00 0.0000D-01 0 0000D-01 0 0000D-01 1 0000D 00 0 0000D-01
 0.0000D-01 0.0000D-01 1.0000D 00 0 0000D-01 0 0000D-01 0 0000D-01 1 0000D 00
 0.0000D-01 0.0000D-01 0.0000D-01 1 0000D 00 0 0000D-01 0 0000D-01 0 0000D-01
 1.0000D 00 0.0000D-01 0.0000D-01 0 0000D-01 1 0000D 00 0 0000D-01 0 0000D-01
 0.0000D-01 1.0000D 00
 0.0000D-01 5.0000D-01 2 1353D 01 6 1451D 00 1 0000D 00 1 4325D 00 0 0000D-01
-2.2192D 01 1.1330D 00 1 3333D 00-2 1087D 00 1 8704D 01 1 2508D 00 1 2162D 00
-3.9955D-01 3.2111D-02 1.3599D 00 1 1800D 00-3 9662D-01 5 3435D 00 1 4619D 00
 1.1657D 00 6.9352D-02-4 1645D 00 1 5561D 00 1 1577D 00-2 6761D-01-1 0485D 00
 1.6458D 00 1.1336D 00-3.4967D-01-1 0874D 01 1 7257D 00 1 0803D 00-1 1316D 00
-3.5403D 01 1.7926D 00 9 2930D-01-3 4600D 00-3 0201D 01 1 8410D 00 6 6771D-01
-5 2699D 00-1 5753D 02 1 9650D 00 1 7147D-01-1 3582D 01-5 0860D 01 1 8571D 00
-5 2583D-01-1.5981D 01-4 1056D 02 1 8209D 00-1 4578D 00-3 1948D 01-5 3338D 02
 1.7497D 00-2.8402D 00-4 9953D 01-4 3219D 02 1 6459D 00-4 4519D 00-6 2357D 01
-3.0736D 03 1.5857D 00-5 4481D 00-1 0006D 02-3 6123D 02 1 5181D 00-6 5955D 00
-1 0412D 02-1 2050D 03 1 4467D 00-7 6975D 00-1 1619D 02-6 4256D 03 1 3741D 00
-3.9608D 00-1.7243D 02 2.9576D 03 1 3010D 00-1 0189D 01-1 4989D 02 7 8903D 03
 1 2328D 00-1 0989D 01-9 9215D 01-1 4425D 04 1 1723D 00-1 1725D 01-1 7630D 02
 1 2823D 04 1 0000D 00
 0 0000D-01 0 0000D-01 5 9023D 00 5 1693D 00 1 0000D 00 1 8060D-01 0 0000D-01
-5 0645D 00 1 0164D 00 1 5774D-01-4 8123D-01 2 8905D 00 1 0295D 00 1 2541D-01
-2 1133D-01 1 3792D 00 1 0402D 00 1 1188D-01-8 5768D-02-6 3464D-01 1 0495D 00
 1 0196D-01-1.4129D-01 1 2784D 00 1 0574D 00 9 4733D-02-3 7848D-02-1 3606D 00
```

```
 1 0646D 00 8.7604D-02-1 4434D-01 1 1396D-01 1 0706D 00 7 7519D-02-1 3615D-01
 6 7029D-01 1.0754D 00 7.0014D-02-9 2061D-02-5 2022D 00 1 0792D 00 5 5148D-02
-4 0407D-01 5.6896D 00 1.0817D 00 4 1760D-02-1 0452D-01-2 0307D 01 1 0832D 00
 1.4236D-02-1 0624D 00 4.3135D 00 1 0830D 00-2 3821D-02-8 9469D-01-1 0995D 01
 1 0816D 00-6.0286D-02-1 2658D 00-1 0765D 02 1 0790D 00-1 4096D-01-4 3556D 00
 1.8417D 02 1 0770D 00-1 8053D-01-2 0964D 00-1 2725D 02 1 0746D 00-2 5003D-01
-1 0270D 01 5 8797D 02 1 0717D 00-3 2335D-01-4 3801D 00-1 1470D 03 . 0686D 00
-4 0957D-01-1.5307D 01 2 9308D 03 1 0652D 00-4 4110D-01 7 0350D 00-3 7932D 04
 1 0603D 00-1.1781D 00-2 3656D 02-4 8192D 03 1 0511D 00-2 5111D 00-2 6233D 02
 1.9079D 04 1.0000D 00
 0 0000D-01 0.0000D-01 6 9437D-01 2 1849D-01 1 0000D 00 1 0076D 00 0 0000D-01
-1.2454D 01 1 0933D 00 9 4689D-01-1.2784D 00 9 5675D 00 1 1780D 00 8 6923D-01
-3 8502D-01-6.5530D 00 1 2547D 00 8 0702D-01-8 8167D-01 1 7514D 01 1 3233D 00
 7.8801D-01 5 4567D-01-1 9090D 01 1 5871D 00 7 6967D-01-9 9892D-01-1 4256D 01
 1 4432D 00 6.4783D-01-2.1147D 00-2 9218D 01 1 4825D 00 4 2280D-01-4 1439D 00
-6.1110D 00 1.5911D 00 1 3704D-01-4 5458D 00-2.1657D 02 1 4934D 00-5 2429D-01
-1.7525D 01 6.6293D 02 1.4576D 00-5 2820D-01 1 7376D 01-1 1567D 03 1 4318D 00
-9.9557D-01-3.7191D 01 3.3285D 03 1 3976D 00 7 5171D-02 9 2256D 01-2 4655D 03
 1 4369D 00 1.7847D 00 9 0311D 00-1 1917D 02 1 4913D 00 1 9948D 00 5 6109D 00
-6 0549D 03 1.5144D 00 1.6080D 00-6 8667D 01 1 7767D 04 1 5323D 00 1 9585D 00
 1 3102D 02-1.6781D 04 1.5556D 00 2 4295D 00-3 6852D 01 3 2205D 03 1 5760D 00
 2.2686D 00 9.5912D-02-2.5867D 03 1 5931D 00 2.1942D 00-1 9623D 01-4 0816D 05
 1.5888D 00-6.3484D 00-2.6408D 03-1 2428D 05 1 5140D 00-2 2235D 01-3 3049D 03
 2.4038D 05 1.0000D 00
 0.0000D-01 1.5000D 00 2.1348D 00 2 9241D 00 1 0000D 00-5 0477D-01 0 0000D-01
-2 0392D 01 9.4912D-01-5.9682D-01-1 9376D 00 5 1165D 01 2 9188D-01-5 5489D-01
 2.8360D 00-9 5550D 00 8.5192D-01-3 3629D-01 1 9660D 00 1 7113D 01 8 3196D-01
-9.9774D-02 3.4584D 00-3 9186D 01 8 3175D-01 5 1778D-02 2 8771D-01 2 6231D 01
 8.3878D-01 1.5464D-01 2.3408D 00-8 7854D 00 8 5540D-01 3 0025D-01 3 7090D 00
-4.4546D 01 8.7673D-01 3.1631D-01-1 2207D 00 1 1090D 02 8 9748D-01 4 4230D-01
 5 4255D 00-2.9452D 02 9.2112D-01 3 1978D-01-1 0090D 01 6 2958D 02 9 3600D-01
 5.4478D-01 1.9619D 01-6.8527D 02 9 6531D-01 7 8956D-01-7 0312D 00-2 3776D 02
 9.8643D-01 4.1675D-01-1.5057D 01 1 3857D 03 9 9765D-01 5 5533D-01 2 4714D 01
-8 3054D 03 1.0038D 00 2.3356D-01-7 7172D 01 5 5704D 03 1 0028D 00-2 8196D-01
-1.4564D 01 5.7597D 02 9.9938D-01-3 9883D-01-8 8021D 00-1 6170D 04 9 9375D-01
-1 0956D 00-1.5037D 02 2 8057D 04 9 8310D-01-1 4266D 00 6 3519D 01 2 1646D 04
 9.7622D-01-5.7232D-01 2.0253D 02 7 5080D 03 9 7622D-01 6 1722D-01 2 4265D 02
-1.7649D 04 1 0000D 00
 0.0000D-01 1.0000D 00 4.7769D 00 9 0519D 00 1 0000D 00-2 2169D 00 0 0000D-01
 1.1788D 02 8.0621D-01-1 6847D 00 9 1201D 01-8 4968D 01 6 8623D-01-1 0087D 00
 3.2769D 00-2.4953D 00 6.0765D-01-1 2074D-01 3 0497D 00-8 2317D 00 5 5549D-01
-4 8609D-01 2.3318D 00-1 3959D 01 5 2256D-01-3 4311D-01 1 2024D 00 5 8412D 00
 4 9985D-01-2.3111D-01 1 6590D 00-1 5413.0 00 4 8743D-01-1 1581D-01 1 5472D 00
-1 1901D 01 4.8259D-01-3 9797D-02 7 6444D-01 9 4872D 01 6 8319D-01 8 6569D-02
 3.4524D 00-9.1967D 01 4 9029D-01 1 4087D-01-1 3193D 00 2 2435D 02 4 9953D-01
 3 3830D-01 9.7601D 00-1 5902D 02 5 1851D-01 5 3762D-01 3 5757D 00-1 0394D 02
 5.4005D-01 6.5911D-01 6 7288D-02 7 2966D 02 5 8197D-01 9 6157D-0  2 1009D 01
-1.5606D 03 5.7477D-01 1 1019D 05 1 8649D 00 5 1322D 03 5 8849D-01 1 4470D 00
 5.9547D 01 3 3742D 03 6.0650D-01 2 2115D 00 9 3302D 01 9 0237D 02 6 2954D-01
 3.0629D 00 1 0120D 02 2 7950D 04 6 5795D-1, 4 4e.5D 00 3 1427D 02 7 5875D 04
 6 9756D-01 8.2293D 00 8.0153D 02 4 3624D 04 7 5410D-01 1 3138D 01 1 0357D 03
-7.5332D 04 1.0000D 00
 0 0000D-01 0.0000D-01 0 0000D-01 0 0000D-01 1 0000D 00 0 0000D-01 0 0000D-01
 0.0000D-01 1.0000D 00 0.0000D-01 0 0000D-01 0 0000D-01 1 0000D 00 0 0000D-01
```

```
0 00000D-01 0.00000D-01 1 00000D 00 0 00000D-01 0 00000D-01 0 00000D-01 1 00000D 00
0 00000D-01 0.00000D-01 0 00000D-01 1 00000D 00 0 00000D-01 0 00000D-01 0 00000D-01
1 00000D 00 0 00000D-01 0 00000D-01 0 00000D-01 1 00000D 00 0 00000D-01 0 00000D-01
0 00000D-01 1 00000D 00 0 00000D-01 0 00000D-01 0 00000D-01 1 00000D 00 0 00000D-01
0 00000D-01 0.00000D-01 1 00000D 00 0 00000D-01 0 00000D-01 0 00000D-01 1 00000D 00
0 00000D-01 0.00000D-01 0 00000D-01 1 00000D 00 0 00000D-01 0 00000D-01 0 00000D-01
1 00000D 00 0 00000D-01 0 00000D-01 0 00000D-01 1 00000D 00 0 00000D-01 0 00000D-01
0 00000D-01 1 00000D 00 0 00000D-01 0 00000D-01 0 00000D-01 1 00000D 00 0 00000D-01
0 00000D-01 0 00000D-01 1 00000D 00 0 00000D-01 0 00000D-01 0 00000D-01 1 00000D 00
0 00000D-01 0 00000D-01 0.00000D-01 1 00000D 00 0 00000D-01 0 00000D-01 0 00000D-01
1 00000D 00 0 00000D-01 0 00000D-01 0 00000D-01 1 00000D 00 0 00000D-01 0 00000D-01
0 00000D-01 1 00000D 00
0 00000D-01 0 00000D-01 0 00000D-01 0 00000D-01 1 00000D 00 0 00000D-01 0 00000D-01
0 00000D-01 1 00000D 00 0 00000D-01 0 00000D-01 0 00000D-01 1 00000D 00 0 00000D-01
0 00000D-01 0 00000D-01 1 00000D 00 0 00000D-01 0 00000D-01 0 00000D-01 1 00000D 00
1 00000D 00 0 00000D-01 0 00000D-01 0 00000D-01 1 00000D 00 0 00000D-01 0 00000D-01
0 00000D-01 1.00000D 00 0.00000D-01 0 00000D-01 0 00000D-01 1 00000D 00 0 00000D-01
0 00000D-01 0 00000D-01 1 00000D 00 0 00000D-01 0 00000D-01 0 00000D-01 1 00000D 00
1 00000D 00 0 00000D-01 0.00000D-01 0 00000D-01 1 00000D 00 0 00000D-01 0 00000D-01
0 00000D-01 1.00000D 00
0 00000D-01 0 00000D-01 0 00000D-01 0 00000D-01 1 00000D 00 0 00000D-01 0 00000D-01
0 00000D-01 1.00000D 00 0.00000D-01 0 00000D-01 0 00000D-01 1 00000D 00 0 00000D-01
0.00000D-01 0.00000D-01 1 00000D 00 0 00000D-01 0 00000D-01 0 00000D-01 1 00000D 00
0.00000D-01 0.00000D-01 0.00000D-01 1 00000D 00 0 00000D-01 0 00000D-01 0 00000D-01
1.00000D 00 0.00000D-01 0 00000D-01 0 00000D-01 1 00000D 00 0 00000D-01 0 00000D-01
0 00000D-01 1.00000D 00 0.00000D-01 0 00000D-01 0 00000D-01 1 00000D 00 0 00000D-01
0.00000D-01 0.00000D-01 1 00000D 00 0 00000D-01 0 00000D-01 0 00000D-01 1 00000D 00
0 00000D-01 0.00000D-01 0 00000D-01 1 00000D 00 0 00000D-01 0 00000D-01 0 00000D-01
1.00000D 00 0.00000D-01 0.00000D-01 0 00000D-01 1 00000D 00 0 00000D-01 0 00000D-01
0 00000D-01 1.00000D 00 0.00000D-01 0 00000D-01 0 00000D-01 1 00000D 00 0 00000D-01
0 00000D-01 0.00000D-01 1 00000D 00 0 00000D-01 0 00000D-01 0 00000D-01 1 00000D 00
0 00000D-01 0 00000D-01 0.00000D-01 1 00000D 00 0 00000D-01 0 00000D-01 0 00000D-01
1.00000D 00 0 00000D-01 0.00000D-01 0 00000D-01 1 00000D 00 0 00000D-01 0 00000D-01
0.00000D-01 1.00000D 00
0 00000D-01 0.00000D-01 0.00000D-01 0 00000D-01 1 00000D 00 0 00000D-01 0 00000D-01
0 00000D-01 1.00000D 00 0.00000D-01 0 00000D-01 0 00000D-01 1 00000D 00 0 00000D-01
0.00000D-01 0.00000D-01 1 00000D 00 0 00000D-01 0 00000D-01 0 00000D-01 1 00000D 00
0 00000D-01 0.00000D-01 0.00000D-01 1 00000D 00 0 00000D-01 0 00000D-01 0 00000D-01
1 00000D 00 0.00000D-01 0 00000D-01 0 00000D-01 1 00000D 00 0 00000D-01 0 00000D-01
0 00000D-01 1.00000D 00 0.00000D-01 0 00000D-01 0 00000D-01 1 00000D 00 0 00000D-01
0.00000D-01 0.00000D-01 1.00000D 00 0 00000D-01 0 00000D-01 0 00000D-01 1 00000D 00
0.00000D-01 0 00000D-01 0.00000D-01 1 00000D 00 0 00000D-01 0 00000D-01 0 00000D-01
1.00000D 00 0.00000D-01 0.00000D-01 0 00000D-01 1 00000D 00 0 00000D-01 0.00000D-01
0 00000D-01 1.00000D 00 0.00000D-01 0 00000D-01 0 00000D-01 1 00000D 00 0 00000D-01
0 00000D-01 0.00000D-01 1 00000D 00 0 00000D-01 0 00000D-01 0 00000D-01 1 00000D 00
0.00000D-01 0.00000D-01 0.00000D-01 1 00000D 00 0 00000D-01 0 00000D-01 0 00000D-01
1 00000D 00 0.00000D-01 0.00000D-01 0 00000D-01 1 00000D 00 0 00000D-01 0 00000D-01
0.00000D-01 1.00000D 00
```

```
 0.0000D-01 0.0000D-01 2 1305D 00 7 0480D 00 1 0000D 00-2 6448D 00 0 0000D-01
 1.9580D 02 7.7669D-01-1 7608D 00 1 8605D 01-1 7063D 02 6 7024D-01-7 6738D-01
 2.6734D 00 7 8775D 00 6 1244D-01-4 9134D-01 3 3906D 00-1 7169D 01 5 8059D-01
-2 6072D-01 1.8986D 00-8.6538D 00 5 6495D-01 1 3543D-01 1 1984D 00 1 1369D 00
 5.5811D-01-3.8159D-02 1 2873D 00 1 4579D 00 5 5879D-01 5 6184D-02 1 3922D 00
-4.1507D 00 5 6543D-01 1.4077D-01 1 1192D 00 2.4246D 01 5 7674D-01 2 5138D-01
 2.5722D 00-3 3640D 01 5 9272D-01 3 4018D-01 6 0125D-01 1 8257D 02 6 1286D-01
 5 8107D-01 9.4117D 00-1 1656D 02 6 4143D-01 8 5895D-01 4 8785D 00 1 2589D 02
 6 7401D-01 1 0954D 00 9 1281D 00 4 8150D 02 7 1110D-01 1 5557D 00 2 2948D 01
-4 1043D 02 7.3179D-01 1.8063D 00 1 7913D 01 1 9271D 03 7 5366D-01 2 1293D 00
 3.9572D 01 1.9551D 03 7.7728D-01 2 6230D 00 5 9131D 01 1 6904D 03 8 0270D-01
 3.2055D 00 7.3929D 01 8 6683D 03 8 2993D-01 4 0209D 00 1 4001D 02 1 4086D 04
 8.5926D-01 5.2105D 00 2 3047D 02 1 1653D 04 8 9069D-01 6 6086D 00 2 9278D 02
-2.1295D 04 1.0000D 00
 0 0000D-01 0.0000D-01 4 7778D 00 8 8836D 00 1 0000D 00-1 1110D 00 0 0000D-01
 5 9856D 01 9.0299D-01-8 4078D-01 5 6875D 00-4 2956D 01 8 4345D-01-4 9698D-01
 1.6766D 00-1.3812D 00 8.0498D-01-3 5005D-01 1 5509D 00-3 9428D 00 7 7991D-01
-2 2980D-01 1.2071D 00-6.2033D 00 7 6472D-01-1 5244D-01 7 0513D-01 2 2201D 00
 7.5513D-01-9.0451D-02 8.7889D-01 6 6723D-01 7 5094D-01-2 5525D-02 9 2688D-01
-2.0771D 00 7.5117D-01 3 0943D-02 7 9027D-01 1 6863D 01 7 5505D-01 1 0858D-01
 1.8008D 00-2.1961D 01 7 6272D-01 1 7296D-01 6 4469D-01 7 2012D 01 7 7286D-01
 2 8349D-01 4 0417D 00-2.9522D 00 7 8691D-01 4 3845D-01 3 9269D 00 4 7524D 01
 8 0425D-01 5.9806D-01 5 5311D 00 3 0776D 02 8 2491D-01 8 8359D-01 1 4364D 01
-5 4670D 01 8.3681D-01 1 0557D 00 1 3693D 01 7 0914D 02 8 4971D-01 1 2544D 00
 2 1664D 01 1 7678D 03 8 6364D-01 1 5594D 00 7 9348D 01 7 8286D 02 8 7889D-01
 1 9340D 00 4 6202D 01 4 7729D 03 8 9533D-01 2 4249D 00 8 2586D 01 1 0105D 04
 9 1305D-01 3.1653D 00 1 4799D 02 7 5230D 03 4 3227D-01 4 0636D 00 1 8819D 02
-1.3688D 04 1 0000D 00
```

```
 RETRIEVAL FILE NO  TP5-05-4
       FILE SIZE =   21
       L/D       =    0.5000
       ALFA      =    1.1250
 0.0000D-01 2.0420D-01 3.7829D-01 5 1134D-01 6 1120D-01 6 8676D-01 7 4578D-01
 7.9307D-01 8 3152D-01 8.6335D-01 8 9627D-01 8 1332D-01 9 3214D-01 9 4884D-01
 9 6261D-01 9 6851D-01 9.7385D-01 9 7853D-01 9 8275D-01 9 8630D-01 1 0000D 00
 1.0000D 00 0 0000D-01 1 5236D-01 9 4704D-01 1 0000D 00-1 3159D 00 0 0000D-01
 1.6298D 01 7.5460D-01-9 7526D-01 3 7280D 00-1 4778D 01 1 2285D-01-6 1983D-01
 7.5521D-01 1.7403D 00 5 4715D-01-5 0395D-01 9 8676D-01 4 9652D 00 5 0257D-01
-3.8065D-01 1 4826D 00 9.9419D 00 4 7876D-01-2 4024D-01 2 2329D 00 2 5618D 01
 4 6934D-01-6 3787D-02 3 7458D 00 5 7912D 01 4 7154D-01 1 7207D-01 6 1847D 00
 8.6402D 01 4 6400D-01 4.9132D-01 2 9836D 00 1 3701D 0  9 5535D-01 9 7753D-01
 1.4194D 01 8.1015D 01 5 3433D-01 1 2356D 00 1 6274D 01  9%,0D %3 4 ,0734D-01
 1.9404D 00 4 0570D 01-9 2073D 02 6 1303D-01 2 5408D 00 2 7245D 0  2 5474D 1 
 6 6079D-01 3 2914D 00 6 6519D 01 1 7452D 03 7 1285D-01 4 3731D 00 2 6749D 0 
 1.4857D 03 7 4053D-01 4.9345D 00 9 9556D 01 1 4496D 04 " 5066D-01  5 6772E 0
 1.7692D 02-3.3333D 03 7 9723D-01 6 4676D 00 1 6127D 02 7 1.17D 04 8 3&.%D-01
 7 4187D 00 2 9194D 02 3.5597D 04 2 5524D-01 4 7 1E1 60 . 2 07E 3,-1  ,4% D E 
 1.0000D 00
 0 0000D-01 0 0000D-01 0 0000D-01 3 9999D-01 1 9( 1( 0 . 11 .(-0  0 9.4.E-1
 0 0000D-01 1 0000D 00 0 0000D-01 0 9999D-01 F 9999D-01 ' 0766D 00 0 0604E-0
 0 0000D-01 0 9999D-01 1.0000D 00 0 9999D-01 0 9999D-01 0 09F62-01 . 0(000D 0(
 0 0000D-01 0 0000D-01 0 0000D-01 1 0999D 00 0 9(0(D-01 0 0986D-01 0 0(4(0-0
 1 0000D 00 9 0000D-01 0 0000D-01 0 0960D-01 ' 0(00D 1 0 E0(E0-01 9 0(0(0-0
 0.0000D-01 1.0000D 00 0 0(,0D-01 0 9(00D-01 0 0(0E1-01 1 E0(0 0A 0 0(.00D-0.
 0 0000D-01 0 0000D-01 1 0000D 00 0 0060(-01 0 0(20D-01 ' 0D(0D-0 . 9(000 0(
 0 0000D-01 0 0000D-01 0.0000D-01 1 0000D 00 0 9(00D-01 0 E0000D-01 0 0000D-01
 1 0000D 00 0 0000D-01 0 0000D-01 0 0(0(5-01 1 9(0(0 0( 0 0(0(0-01 0 0(0(0-01
 0 0000D-01 1 0000D 00 0 0000D-01 0 9(0(0-01 0 9(0E1-01 . 0(0(0 0( 0 9(000-01
 0 0000D-01 9 0000D-01 1 0000D 00 0 0-0(1-01 0 90.(1 1.  ^^1(-  .  (1(1 1
 0 0000D-01 0 0000D-01 0 0000D-01 . 0(0(0 0( 0 0(1(1-0 1 . 0(0(0-0( 0 0(0(0-0
 1 0000D 00
 0 0000(-01 5 0000D-01 2.9587D 01 ( -(0(1 00 1 (6000 (    0 0  0 00 0 5000-1
-4 7190D 00 1 2792D 00 1 3017D 0(-2 (,2(0-01 ' 2(0(1 00 . (.0( 0 00 ' 2(.(0 0(
 2 9305D-01 1 5923D 00 1 6(48D 0(  ( .(0(1  .0 ( .(0(1-(  (2(0 0 .  ' 0(1 0(
 1 2402D 00-6 4336D-01-2 9691D 01 1 0(0(0 00 1 (1(40 00-( ( 0(0 0 00-( 0(0(0 0(
 1 9385D 00 8 1645D-01-6 9514D 0(-( 0(0(1 (2 ' 0(0(1  0 2 0 0 0 0-( 1(1(0 0(
-2 4592D 02 1 9678D 00-3 5416D-01-2 (0(1 0(-0 00.2( 0 (  0(0(1 0 00 . 20(0( 0(
-3 4372D 01-8 7449D 02 1 9936D 00-1 0(0(1 0(-0 0(0(1 0 (  0(0(1 0 0 . 2(000 0
-3 8059D 00-5 4901D 01-3 7516D 0( ( .(0(0 00-0 0(0(1 0(-0 ( 2(1(0 02 0 7650D 0
 1 6260D 00-7 5797D 00-1 2754D 0(-  .0(0( 00 ' 0(0(1 0 0 . 0 0 0 0(-  00 00 0(
-1 3595D 04 1 442 0 00-1 0(0(0 (( ( 0(0(0 0 ' 0(0(1 0 0 . 0(0(0 0(-  2000 0(
-1 5297D 02-4 6502D 04 1 2276D 00-( 0(0(0 0(-0 0(0(1 0 0 ' 0(0(0 0(  1 2650 0(
-1 4520 01-0 1987D 01-4 4317D 01  ( 0(0(1 00 0 0(0(1 0 0 . 0(0(0 02 . 00 0( 0(
 1 0000D 00
 0 0000D-01 0 0000D-01 4 0(0(0 (0 ' 0(0(0 00 ' 0(0(1 0    0(0(0 0( 0 0000D-0 .
-1 2744D 00 1 0(64D 00 1 1(40D-(-( 0 ( (-0( ' 0(0(0 ( 0(0(0 0 00 4 0000-0 0
-" 1(407-02 ' 1(020- 0 1 (7190 0( 0 ' 0(0(1 0 0(0(0 0 0 0 0 0 0 0(0(0 0 0
 5 4(059-02-0 5070D-02 4 0(0(0 00  ( 0(0(0 0 0(0(0 0 0 0 0 0 0 0(0(0 0 0
 1 0795D 00 9 0(00-02-2 7 000  0(0(0 0 0(0(0 0 0(0(0 0 0 0 0 0 0 0(0(0 0 0
-1 2908D 01 1 0(7(0 00 9 .2(5D-0(-( ' 0(0(0 0( 0 ' 0(0(1 0 0 0.0(0 00 0 2(0(0-0
-5 0725D-02-5 1(1(0 0( 1 1 0(0(0 0( 0 0(0(0-0 0(0(1 0 0 0 0(0(0 0 0 0(0(0 0(0
 9 5306D-02-7 2(0(0 0(-1 0(0(0 0( 0 0(0(0 0 0 0(0(1 0(-0 0(0(0 00 00 0(0(0 0(
```

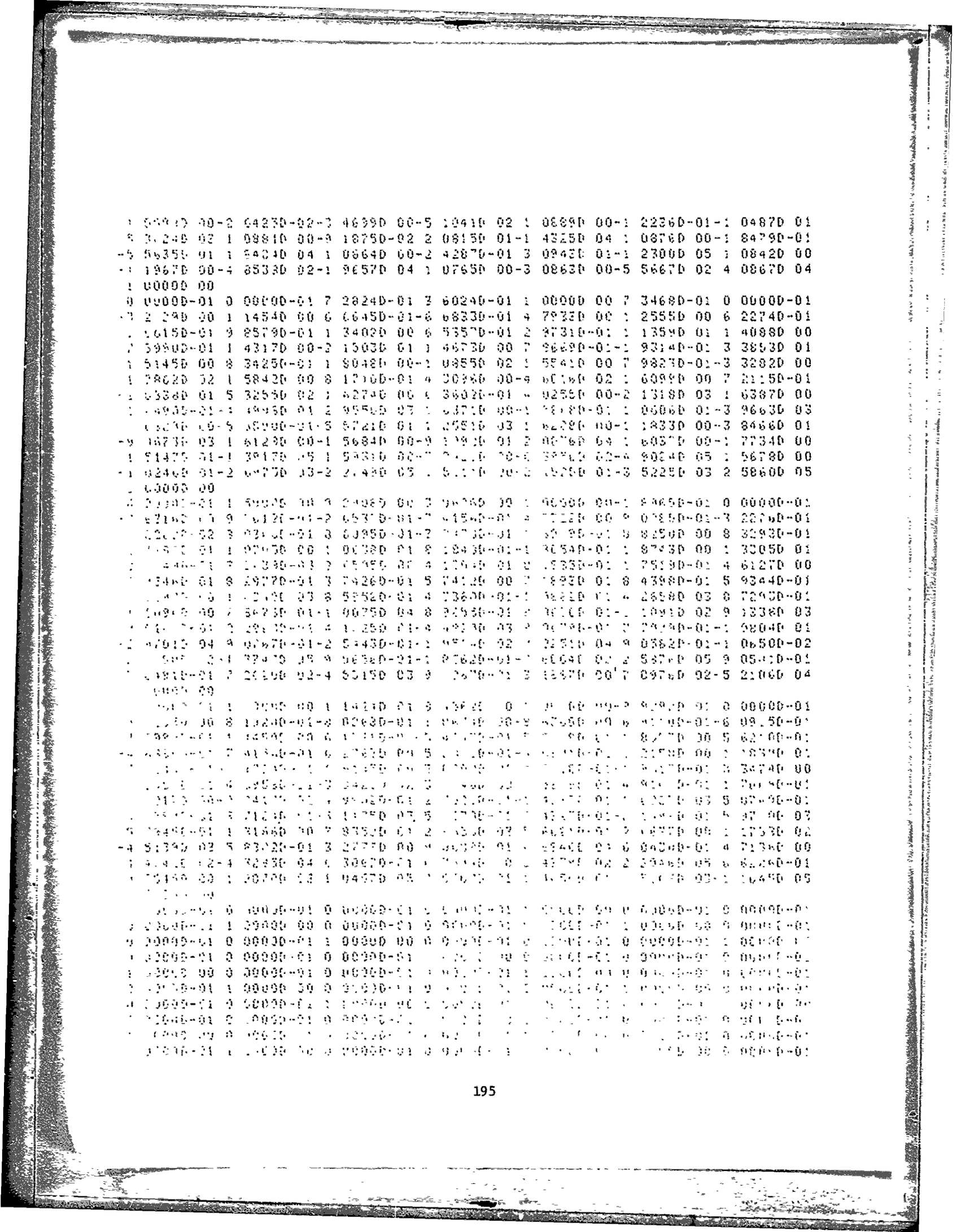

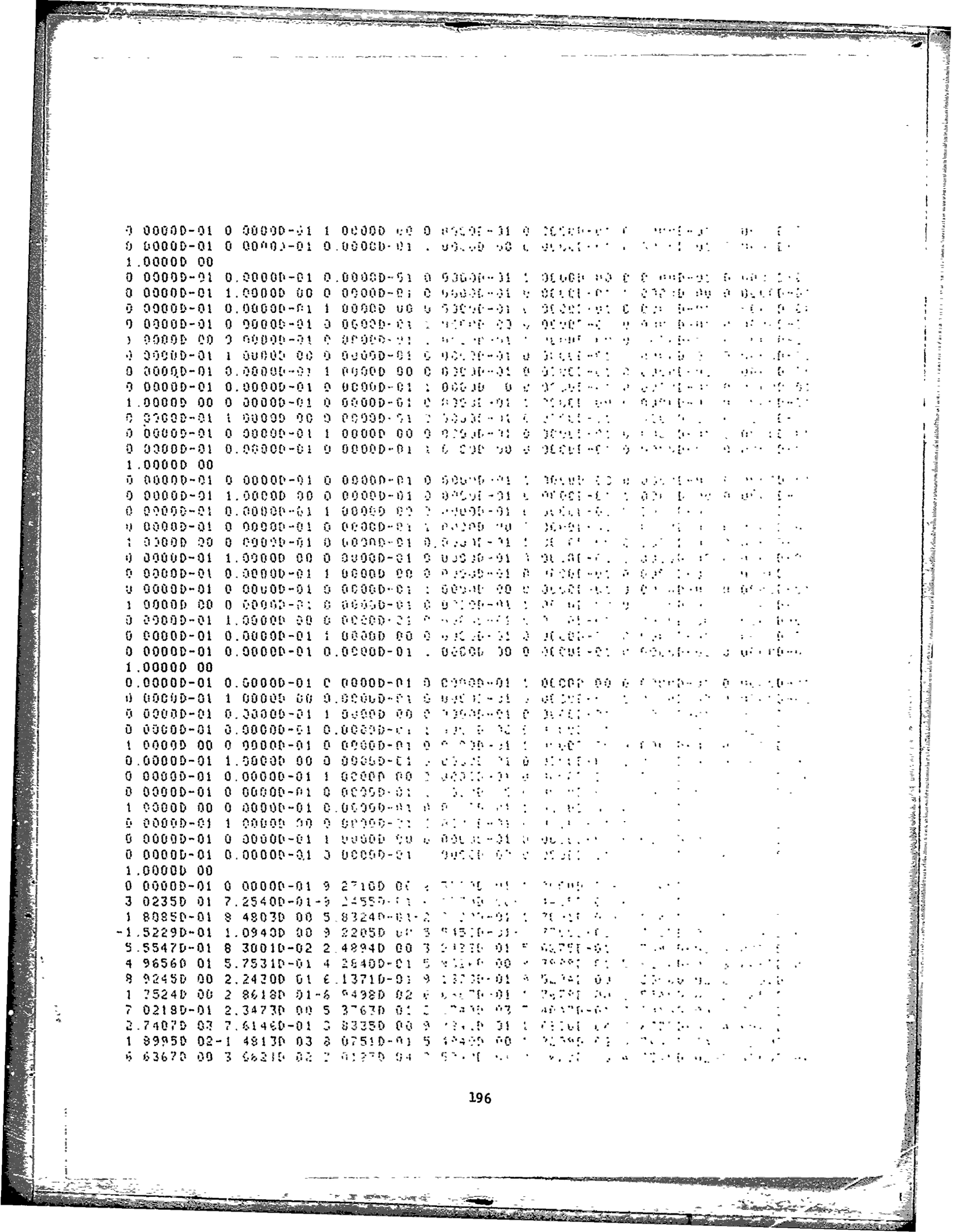

```
 1 0000D 00
 0 0000D-01 0 0000D-01 1 1420D 01 2 0700D 01 1 0000D 00-9 1320D-01 0 0000D-01
 1 4906D 01 8.3468D-01-6 0243D-01 3 0439D 00-1 5735D 01 7 6209D-01-3 1097D-01
 3 0455D-01 3.6366D 00 7 2434D-01-2 3826D-01 7 8842D-01-1 1776D-01 7 0496D-01
-1 6011D-01 7 7666D-01 6 1264D 00 6 9552D-01-8 3931D-02 1 2396D 00 1 0250D 01
 6.9308D-01 7 0771D-03 1 8445D 00 2 3052D 01 6 9508D-01 1 2001D-01 2 9346D 00
 4 0271D 01 7 0305D-01 2 6270D-01 4 4332D 00 6 0577D 01 7 1401D-01 4 3610D-01
 6 4115D 00 2 7958D 01 7 2819D-01 6 1919D-01 7 1655D 00 5 9892D 02 7 4554D-01
 9 4234D-01 2.0939D 01-5 2070D 02 7 6642D-01 1 2442D 00 1 1148D 01 1 6024D 03
 7 9001D-01 1 6545D 00 3 7937D 01 1 7724D 03 8 1711D-01 2 3435D 00 6 2303D 01
 3 3663D 02 8 3204D-01 2 7172D 00 6 4290D 01 1 3945D 04 8 4781D-01 3 2598D 00
 1 3871D 02-3 1383D 03 8 6462D-01 3 8766D 00 1 2795D 02 3 1328D 04 8 8237D-01
 4.6735D 00 2.5570D 02 2 1402D 04 9 0118D-01 5 7416D 00 3 3332D 02-2 4470D 04
 1.0000D 00
```

```
 RETRIEVAL FILE NO  TP5-10-1
       FILE SIZE =   25
       L/D       =    1.0000
       ALFA      =    1.1250
 0.0000D-01  8.0058D-02 1.2816D-01 1 72490-01 2 20560-01 2 74910-01 3 33660-01
 3.9921D-01  4.6971D-01 5 4491D-01 6 29700-01 6 94230-01 7 61610-01 8 22070-01
 8 7250D-01  8.9466D-01 9 1395D-01 9 30880-01 9 45250-01 9 54760-01 9 69590-01
 9.7855D-01  9.8574D-01 9.9122D-01 1 0000D 00
 1 5000D 00  0 0000D-01 1.0791D 00 1 0000D 00 1 0000D 00-2 6378D-01 0 0000D-01
-1.1888D 02  9.2068D-01-1 2448D 00-9 5177D 00 1 0311D 02 8 5170D-01-1 5833D 00
-4.5577D 00-9.6175D 01 7.7564D-01-1 8799D 00-8 8209D 00 3 0026D 02 6 8003D-01
-1.9459D 00  6.0705D 00 6 5814D 01 5 8580D-01-1 5188D 00 9 6475D 00-7 2879D 01
 5.1075D-01-1.0778D 00 5.3656D 00 6 1759D 00 4 5192D-01-7 1286D-01 5 7784D 00
-2 6345D 01  4.1447D-01-3 7145D-01 3 9131D 00-1 4572D-01 3 9759D-01-7 7590D-02
 3 9021D 00-5.9746D 00 4 0249D-01 2 0093D-01 3 4493D 00 1 0049D 01 4 2726D-01
 4.8177D-01  4.1877D 00 2.8001D 00 4 6937D-01 7 7032D-01 4 3764D 00 4 7787D 01
 5 2570D-01  1.1222D 00 7.2656D 00 1 6811D 01 5 9195D-01 1 5100D 00 8 1103D 00
 2.6041D 02  6.2781D-01 1 7703D 00 1 3883D 01 1 3217D 02 6 6438D-01 2 0461D 00
 1 6433D 01-2 5556D 01 7 0137D-01 2 3207D 00 1 6000D 01 9 4254D 02 7 3870D-01
 2 6690D 00  3 0207D 01 5.4472D 02 7 7543D-01 3 0938D 00 3 7171D 01 1 3266D 02
 8 1160D-01  3 5812D 00 5 1568D 01 7 2970D 03 8 4664D-01 4 3365D 00 1 1694D 02
-7 8491D 03  8 8034D-01 4 9743D 00 6 8538D 01 1 4468D 03 9 1147D-01 7 4726D 00
 8.5240D 02-9.7031D 04 1.0000D 00
 0 0000D-01  0 0000D-01 0 0000D-01 0 0000D-01 1 0150D 00 0 5907D-01 0 0647D-01
 0 0000D-01  1 0000D 00 0 0000D-01 0 0453D-01 0 3607D-01 1 0036D 00 0 0186D-01
 0 0000D-01  0.0000D-01 1 0000D 00 0 0003D-01 0 0522D-01 0 0007D-01 1 0172D-01
 0 0000D-01  0.0000D-01 0 0000D-01 1 0000D 00 0 0000D-01 0 0000D-01 0 0000D-01
 1 0000D 00  0 0000D-01 0 0000D-01 0 0000D-01 1 0000D 00 0 0000D-01 0 0000D-01
 0 0000D-01  1.0000D 00 0.0000D-01 0 0000D-01 0 0000D-01 1 0000D 00 0 0000D-01
 0 0000D-01  0 0000D-01 1 0000D 00 0 0000D-01 0 0000D-01 0 0000D-01 0 0000D-01
 0 0000D-01  0 0000D-01 0 0000D-01 1 0000D 00 0 0000D-01 0 0000D-01 0 0000D-01
 1 0000D 00  0 0000D-01 0 0000D-01 0 0000D-01 1 0000D 00 0 0000D-01 0 0000D-01
 0 0000D-01  1 0000D 00 0 0000D-01 0 0000D-01 0 0000D-01 1 0000D 00 0 0000D-01
 0 0000D-01  0 0000D-01 1 0000D 00 0 0000D-01 0 0000D-01 0 0000D-01 1 0000D 00
```

```
-2.4051D 01 1.0366D 00 4.0525D-01-1 9255D 00 1 1112D 01 1 0540D 00 3 2549D-01
-1.3909D 00 1.6189D 01 1.0673D 00 2.7973D-01-1 7321D-01 5 0548D 00 1 0801D 00
 2.5321D-01-4.3034D-01 5.9441D-01 1 0932D 00 2 3070D-01-3 9804D-01 4 6601D 00
 1.1063D 00 2.1536D-01-1.2424D-01 1 4399D 00 1 1202D 00 2 1031D-01-2 9861D-02
 1.3662D 00 1 1350D 00 2.1160D-01 6 6460D-02 4 1867D-01 1 1511D 00 2 1778D-01
 9.7945D-02 2.4597D 00 1.1681D 00 2 3226D-01 2 8435D-01-1 1504D 00 1 1859D 00
 2.5006D-01 1.9977D-01 3.3137D 00 1 2033D 00 2.7105D-01 4 2306D-01-3 5972D 00
 1.2204D 00 2 9005D-01 2.0557D-01-8 0103D 00 1 2351D 00 2 9023D-01-1 9835D-01
-1 4318D 01 1.2414D 00 2 8232D-01-5 1562D-01-1 0884D 02 1 2467D 00 2 5213D-01
-2.6152D 00 1.6507D 02 1.2507D 00 2 3151D-01 1 7999D-01-8 7340D 02 1 2537D 00
 1.3501D-01-1.2984D 01 1.8263D 03 1 2550D 00 1 1829D-01 1 0369D 01-8 6813D 03
 1.2551D 00-2.8033D-01-8.3836D 01 3 6390D 04 1 2535D 00 4 2953D-01 2.4226D 02
-2.9450D 05 1.2447D 00-5 4372D 00-1 8746D 03-2 3288D 03 1 1868D 00-1.5732D 01
-1.8874D 03 2.1484D 05 1.0000D 00
 5.0000D-01 0.0000D-01 9.9590D-02 1 4799D-01 1 0000D 00 5 3029D 00 0 0000D-01
-6.4998D 02 1.3690D 00 3.2199D 00-5 2037D 01 3 6336D 02 1 4704D 00 1 1371D 00
-3.4557D 01 2.5218D 02 1.4905D 00-1 4698D-01-2.3379D 01 3 7826D 02 1 4634D 00
-8.3375D-01-5.1968D 00-3.2351D 01 1 4096D 00-1 1640D 00-6 9551D 00 1.3917D 02
 1.3339D 00-1.3324D 00 1.2216D 00-1.3018D 01 1 2486D 00-1 2803D 00 3 6838D-01
 4.1686D 01 1.1616D 00-1.1507D 00 3 3073D 00-1 8310D 01 1 0832D 00-9 5379D-01
 1.9303D 00 4.5209D 00 1 0167D 00-7 9451D-01 2 2730D 00-2 7887D 01 9 6262D-01
-7.0277D-01 2.2242D-01 1.0516D 02 9.2113D-01-4 4903D-01 7 3085D 00-2 9280D 02
 8.9656D-01-5.4230D-01-1.0394D 01 5 4996D 02 8 6775D-01-3 6719D-01 1 7339D 01
-1.5979D 03 8.6097D-01-3.7526D-01-1 8067D 01-2.3085D 02 8 5009D-01-7.6662D-01
-2 2507D 01 7.2548D 02 8.3447D-01-1 0437D 00-1 0822D 01 4 3361D 03 8 2005D-01
-7.0527D-01 5.5133D 01-1.0921D 04 8 1174D-01-8 9312D-01-8 4514D 01 2.4983D 04
 8.0239D-01-3.3928D-01 1.8659D 02 1 2609D 04 8 0836D-01 1 8391D 00 2.9959D 02
 7.1833D 04 8.3376D-01 5.8483D 00 8 1593D 02 3 4754D 04 8 7894D-01 1 0834D 01
 1.0061D 03-1.1453D 05 1.0000D 00
 1.5000D 00 1.5000D 00 1 2218D 00 2 2744D 00 1 0000D 00 4 1273D 00 0 0000D-01
-2 1983D 02 1.3116D 00 3.4228D 00-1 7599D 01 4 4031D 02 1 4641D 00 3 0857D 00
 3.5816D 00-1.2092D 03 1 5868D 00 2 0564D 00-5 0019D 01 6 6162D 02 1 6401D 00
 4.1652D-01-1.8216D 01 4.4720D 02 1 6478D 00 8 6956D-02 6 0890D 00-2 9521D 02
 1 6535D 00-6 4821D-02-1.1256D 01 2 0582D 02 1 6347D 00-3 6045D-01 2 2350D 00
-1.0062D 02 1.6090D 00-4.5295D-01-4 8591D 00 7 9873D 01 1 5668D 00-5 9251D-01
 1.1477D 00-5.3316D 01 1.5214D 00-6 5864D-01-2 8929D 00 7.6493D 01 1 4702D 00
-6.6457D-01 2.7317D 00-1.8157D 02 1 4223D 00-8 9273D-01-9 5036D 00 3 0477D 02
 1.3622D 00-9.1030D-01 8.9225D 00-7 4791D 02 1 3117D 00-1 4113D 00-2 8792D 01
 2.2598D 03 1.2774D 00-1.4945D 00 2 1281D 01-3 7040D 02 1 2521D 00-1 1529D 00
 1.4135D 01-6.0516D 03 1.2297D 00-1 7812D 00-8 8340D 01 9 6815D 03 1 1984D 00
-2.0152D 00 5.7284D 01-9 7308D 03 1 1739D 00-2 0783D 00-6 7148D 01-3 5808D 03
 1.1466D 00-3.0178D 00-1.0600D 02 5 1743D 04 1 1215D 00-1 8901D 00 3 5768D 02
-1.5476D 05 1.1076D 00-3 3173D 00-7 5478D 02 2 2401D 04 1 0787D 00-7 1128D 00
-6.3218D 02 7.1963D 04 1 0000D 00
 0.0000D-01 1.5000D 00 3 3252D 00 7 1015D-01 1 0000D 00-4 1203D-01 0 0000D-01
 1.1719D 02 9.7704D-01-3.6480D-02 9 3818D 00-2 5991D 01 9 8565D-01 3 8475D-01
 8.1316D 00-3 6626D 01 1.0102D 00 7 0922D-01 6 5080D 00-6 7468D 01 1 0505D 00
 9.4410D-01 3.2650D 00 4.5433D 01 1 1079D 00 1 1887D 00 5 7343D 00-5.4091D 01
 1.1858D 00 1.4322D 00 2.5563D 00 2 6565D 01 1 2864D 00 1 6568D 00 4 2975D 00
-2 9224D 01 1.4122D 00 1.8872D 00 2 2372D 00 3 0233D 01 1 5626D 00 2 1499D 00
 4.5109D 00-3.2864D 01 1.7354D 00 2 3884D 00 2 0203D 00 4 1417D 01 1 9192D 00
 2.6489D 00 5.0657D 00-2.6615D 02 2 0956D 00 2.3860D 00-1 2869D 01 7.9011D 01
 2.2193D 00 1.7524D 00-8.0922D 00-1 5859D 03 2.2635D 00-6 7201D-01-8 8063D 01
 1.3837D 03 2.2295D 00-2.2836D 00-5 7402D 01-2.6476D 03 2 1716D 00-3.8836D 00
```

```
-1.0848D 02-1.0525D 04 2.0817D 00-7.2295D 00-2.3670D 02 3.2780D 03 : 9.4210D 00
-1.1178D 01-2.3729D 02-1.2003D 04 : 7.7546D 00-1 5.1946 01-3 9.9078D 02 6 7.4080D 03
 1.5891D 00-1.9038D 01-3 1.7630D 02-3 0.1900D 04 : 4.0210D 00-2 3.0960D 01-5 8.8170D 02
 2.1487D 05 1.2342D 00-2 1.7730D 01 9.5632D 02-2 8.9770D 04 : 1.2860D 00-1 6.9730D 01
 7.9773D 02-9.0808D 04 1.0000D 00
 0.0000D-01 0.0000D-01 0 0.0000D-01 0.0000D-01 1 0.0000D 00 0 0.0000D-01 0 0.0000D-01
 0 0.0000D-01 1.0000D 00 0 0.0000D-01 0 0.0000D-01 0 0.0000D-01 : 0.0000D 00 0 0.0000D-01
 0.0000D-01 0.0000D-01 1 0.0000D 00 0 0.0000D-01 0 0.0000D-01 0 0.0000D-01 : 0.0000D 00
 0.0000D-01 0.0000D-01 0 0.0000D-01 1 0.0000D 00 0 0.0000D-01 0 0.0000D-01 0 0.0000D-01
 1.0000D 00 0 0.0000D-01 0.0000D-01 0 0.0000D-01 1 0.0000D 00 0 0.0000D-01 0 0.0000D-01
 0 0.0000D-01 1.0000D 00 0 0.0000D-01 0 0.0000D-01 0 0.0000D-01 : 0.0000D 00 0.0000D-01
 0.0000D-01 0.0000D-01 1 0.0000D 00 0 0.0000D-01 0 0.0000D-01 0 0.0000D-01 : 0.0000D 00
 0 0.0000D-01 0 0.0000D-01 0 0.0000D-01 1 0.0000D 00 0 0.0000D-01 0 0.0000D-01 0 0.0000D-01
 1 0.0000D 00 0 0.0000D-01 0.0000D-01 0 0.0000D-01 : 0.0000D 00 0 0.0000D-01 0 0.0000D-01
 0 0.0000D-01 1.0000D 00 0 0.0000D-01 0 0.0000D-01 0 0.0000D-01 : 0.0000D 00 0 0.0000D-01
 0 0.0000D-01 0 0.0000D-01 1.0000D 00 0 0.0000D-01 0 0.0000D-01 0 0.0000D-01 : 0.0000D 00
 0.0000D-01 0 0.0000D-01 0 0.0000D-01 1 0.0000D 00 0 0.0000D-01 0 0.0000D-01 0 0.0000D-01
 1 0.0000D 00 0.0000D-01 0 0.0000D-01 0 0.0000D-01 : 0.0000D 00 0 0.0000D-01 0 0.0000D-01
 0 0.0000D-01 1 0.0000D 00 0.0000D-01 0 0.0000D-01 0 0.0000D-01 : 0.0000D 00 0 0.0000D-01
 0 0.0000D-01 0.0000D-01 1 0.0000D 00
 0.0000D-01 0 0.0000D-01 0.0000D-01 0 0.0000D-01 1 0.0000D 00 0 0.0000D-01 0 0.0000D-01
 0.0000D-01 1.0000D 00 0 0.0000D-01 0 0.0000D-01 0 0.0000D-01 : 0.0000D 00 0 0.0000D-01
 0.0000D-01 0 0.0000D-01 1 0.0000D 00 0 0.0000D-01 0 0.0000D-01 0 0.0000D-01 : 0.0000D 00
 0 0.0000D-01 0 0.0000D-01 0 0.0000D-01 1 0.0000D 00 0 0.0000D-01 0 0.0000D-01 0 0.0000D-01
 1.0000D 00 0 0.0000D-01 0 0.0000D-01 0 0.0000D-01 1 0.0000D 00 0 0.0000D-01 0 0.0000D-01
 0 0.0000D-01 1 0.0000D 00 0 0.0000D-01 0 0.0000D-01 0 0.0000D-01 : 0.0000D 00 0 0.0000D-01
 0.0000D-01 0 0.0000D-01 1 0.0000D 00 0 0.0000D-01 0 0.0000D-01 0 0.0000D-01 : 0.0000D 00
 0 0.0000D-01 0 0.0000D-01 0.0000D-01 1 0.0000D 00 0 0.0000D-01 0 0.0000D-01 0 0.0000D-01
 1.0000D 00 0 0.0000D-01 0 0.0000D-01 0 0.0000D-01 1 0.0000D 00 0 0.0000D-01 0 0.0000D-01
 0 0.0000D-01 1.0000D 00 0 0.0000D-01 0 0.0000D-01 0 0.0000D-01 : 0.0000D 00 0 0.0000D-01
 0.0000D-01 0 0.0000D-01 1.0000D 00
 0 0.0000D-01 0.0000D-01 0 0.0000D-01 0 0.0000D-01 : 0.0000D 00 0 0.0000D-01 0 0.0000D-01
 0 0.0000D-01 1.0000D 00 0 0.0000D-01 0 0.0000D-01 0 0.0000D-01 : 0.0000D 00 0 0.0000D-01
 0 0.0000D-01 0 0.0000D-01 1 0.0000D 00 0 0.0000D-01 0 0.0000D-01 0 0.0000D-01 : 0.0000D 00
 0 0.0000D-01 0.0000D-01 0 0.0000D-01 0 0.0000D-01 : 0.0000D 00 0 0.0000D-01 0 0.0000D-01
 1.0000D 00 0 0.0000D-01 0.0000D-01 0 0.0000D-01 : 0.0000D 00 0 0.0000D-01 0 0.0000D-01
 0 0.0000D-01 ! 0.0000D 00 0 0.0000D-01 0 0.0000D-01 : 0.0000D 00 0 0.0000D-01 0 0.0000D-01
 0.0000D-01 0.0000D-01 1.0000D 00 0 0.0000D-01 0 0.0000D-01 : 0.0000D 00 0 0.0000D-01
 0.0000D-01 0 0.0000D-01 0 0.0000D-01 : 0.0000D 00 0 0.0000D-01 0 0.0000D-01 0 0.0000D-01
 1 0.0000D 00 0 0.0000D-01 0.0000D-01 0 0.0000D-01 : 0.0000D 00 0 0.0000D-01 0 0.0000D-01
 0 0.0000D-01 ! 0.0000D 00 0 0.0000D-01 0 0.0000D-01 : 0.0000D 00 0 0.0000D-01 0 0.0000D-01
 0.0000D-01 0.0000D-01 1 0.0000D 00 0 0.0000D-01 0 0.0000D-01 : 0.0000D 00 0 0.0000D-01
 0 0.0000D-01 0.0000D-01 0 0.0000D-01 1 0.0000D 00 0 0.0000D-01 0 0.0000D-01 0 0.0000D-01
 1 0.0000D 00 0 0.0000D-01 0 0.0000D-01 0 0.0000D-01 : 0.0000D 00 0 0.0000D-01 0 0.0000D-01
 0 0.0000D-01 ! 0.0000D 00 0 0.0000D-01 0 0.0000D-01 0 0.0000D-01 : 0.0000D 00 0 0.0000D-01
 0.0000D-01 0 0.0000D-01 1 0.0000D 00
 0.0000D-01 0 0.0000D-01 0 0.0000D-01 0 0.0000D-01 : 0.0000D 00 0 0.0000D-01 0 0.0000D-01
 0 0.0000D-01 1 0.0000D 00 0 0.0000D-01 0 0.0000D-01 0 0.0000D-01 : 0.0000D 00 0 0.0000D-01
 0 0.0000D-01 0 0.0000D-01 1 0.0000D 00 0 0.0000D-01 0 0.0000D-01 0 0.0000D-01 : 0.0000D 00
 0 0.0000D-01 0 0.0000D-01 0.0000D-01 0 0.0000D-01 : 0.0000D 00 0 0.0000D-01 0 0.0000D-01
```

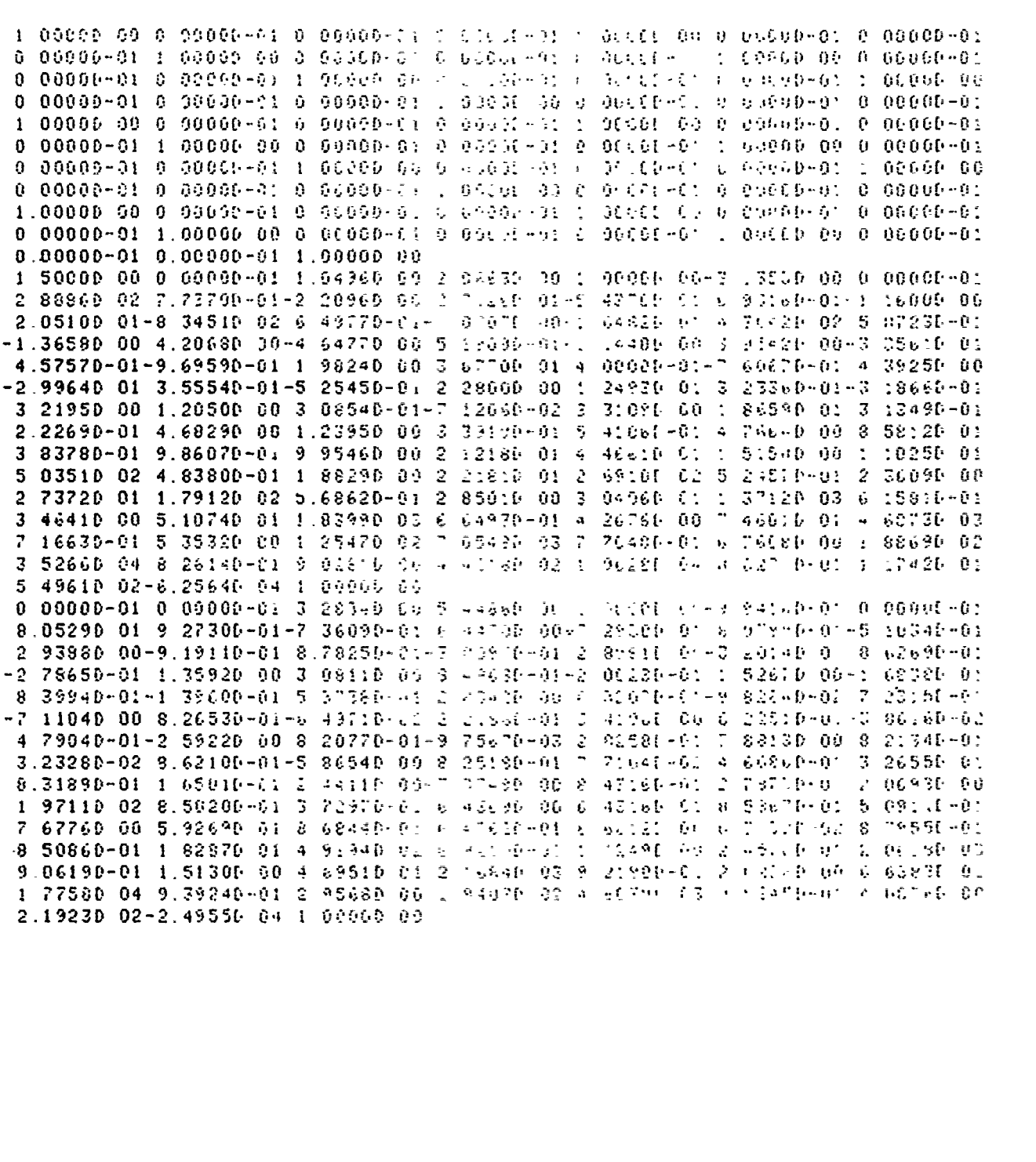

```
 RETRIEVAL FILE NO   TP5-16-2
       FILE SIZE =    2
       L/D       =      1 0010
       ALFA      =      1 1250
 0 60000-01 9 89780-02 1 95700-01 3 [illegible]
 6 21570-01 6 75010-01 7 [illegible]
 ) 27340 01 9 [illegible]
 9 85810-01 9 [illegible]
 ; 00000 00 0 [illegible]
 : 55670 01 9 [illegible]
 1 99060 00 2 [illegible]
-F 72720-01 2 [illegible]
 ^ 29730-01-2 [illegible]
-1 30450 02 5 16310-01 7 37550-02-1 [illegible]
 2 74320 00 2 [illegible]
 5 96430-01 6 [illegible]
 6 24330-01 1 42910 00 1 51040 01 3 [illegible]
 1 21890 03 7 01660-01 2 41440 00 3 [illegible]
 3 16460 01 1 [illegible]
 7 78860 00 7 [illegible]
 9 94690-01 5 19690 00 1 42500 02 [illegible]
 1 92520 04 9 17030-01 7 52240 00 3 [illegible]
 0 00000-01 0 [illegible]
 @ 00000-01 1 [illegible]
 J 00000-01 0 [illegible]
 0 00030-01 5 [illegible]
 1 01000 00 0 [illegible]
 ^ [illegible]
 3 [illegible]
 ^ 00000-01 0 00000-01 0 01000-01 1 [illegible]
 . 00001 00 0 [illegible]
 ' 00001-01 1 [illegible]
 & 00000-01 0 [illegible]
 * 00000-01 0 [illegible]
 ^ 00030-01 0 [illegible]
   70000 00 0 [illegible]
 ' 00001-01 1 [illegible]
 U 00000-01 5 [illegible]
   7364[ 01 1 [illegible]
-4 94740-01-2 [illegible]
 1 06750 00-2.47000-01-3 [illegible]
 . 07650 00 9 [illegible]
 . F1520 02 1 [illegible]
-- 00300 00-9 [illegible]
-- 71620-01-2 [illegible]
   [illegible]
 ^ 31470 01 1 [illegible]
 ' 12740 02-1 [illegible]
   [illegible]
   1.[illegible]
-- 317.0 [illegible]
   [illegible]
-- 3.[illegible]
-1 [illegible]
 ' 5121[illegible]
```

```
 1 15990 00 2 47930-01-1 45540-01-4 30010 00 1 17580 00 2 24320-01-4 35660-01
 1 28950 01 1 18750 00 2.19450-01 2 53470-01-6 31200 00 1 19920 00 2 24090-01
-1 53470-02-8 08030-01 1.20990 00 2 19500-01-1 14460-01 4 77810 00 1 21960 00
 3 19110-01 9.67640-02-1.70620 01 1 22620 00 2 09320-01-5 86340-01-1 22570 01
 1 23500 00 1 81970-01-1 00700 00-3 86020 01 1 23970 00 1 35890-01-2 13820 00
-5 30280 02 1.24110 00 6.70530-02-8 80760 00 4 92330 02 1 24140 00-8 11500-04
-3 47940 00-6 13860 02 1 24110 00-6 69220-02-9 65170 00 1 44220 03 1 24030 00
-9 56190-02 3 24020 00-1 10040 04 1 23880 00-3 95710-01-8 13320 01 3 10160 04
 . 23590 00-2.55490-01 1 23750 02-3 42440 05 1 22670 00-4 81540 00-1 77150 02
-2 95930 04 1 18640 00-1 31220 01-1 90520 03 1 96900 05 1 00000 00
 9 00000-01 5 00000-01 2 33200-01 3 44160-02 1 00000 00 1 40100 00 0 00000-01
-2 01170 01 1 13540 00 1 30250 00-1 99120 00 1 90070 01 1 25490 00 1 19880 00
-. 32850-01-3.97150 01 1.36070 00 1 01190 00-3 85550 00-3 59290 01 1 43350 00
 1 95200-01-7 21090 00-4 40430 01 1 44430 00-3 03160-01-1 10660 01-1 48600 0
   37790 00-1 28950 00-1 23140 01 1 09560 03 1 31890 00 3 73320-01 4 16040 01
-1 56720 03 1 38700 00 1 42760 00-2 21510 01 5 08160 02 1 44330 00 9 63140-01
 4 32050 00-3.96780 02 1 48750 00 7 07380-01-1 48870 01-2 74120 02 1 50020 00
-2 18500-01-2.70050 01-5.35090 01 1 46930 00-1 34130 00-2 91450 01-1 76000 03
 . 09430 00-3 37850 00-8 95580 01-1 17980 05 1 28190 00-6 50950 00-1 24130 02
 . 71160 03 1 16070 00-7 93530 00-1 02600 02-1 53320 04 1 06340 00-1 00040 01
-. 71970 02 1 42020 04 9 51320-01-1 20220 01-1 21040 02-2 07930 04 8 36160-01
-1 40060 01-3 15000 02 3 99530 04 7 22220-01-1 52490 01-7 92850 00-1 42640 04
 0 20530-01-1 56130 01-1.02240 02 9 56670 05 5 39590-01-. 52650 00 5 19260 03
 7 64340 04 6 06900-01 2 27360 01 5 54700 03-5 73220 05 1 00000 00
 . 00000-01 1 50000 00 1 26530 00 2 75760 00 1 00000 00-8 30770-01 0 00000-01
-. 40850 01 9 13880-01-9 48740-01-2 38290 00 7 69520 01 8 22570-01-8 19370-01
 5 05910 00-4 01820 01 7 62740-01-5 22230-01 1 31290 00 2 56740 01 7 23170-01
-2 87760-01 3.71060 00-6 32170 01 7 05160-01-2 04880-01-1 81390 00 1 01420 02
 6 91570-01 3 18340-03 6.74490 00 1 38760 02 7 14240-01 7 74100-01 1 61070 01
-4 58310 02 7 66950-01 9 90440-01-8 38420 00 1 80700 02 8 10910-01 7 88830-01
 1 02940 00-3 56200 01 8 49630-01 7 96930-01-6 94990-01-2 09510 02 8 81160-01
 7 41590-01-9 95530 00 3.77510 02 9 99680-01 4 65300-01 5 14130 00-7 79040 02
 . 13430-01 1.82730-01-2 16030 01 1 22820 03 9 14660-01 7 69710-02 . 43840 01
-1 10450 03 9.16400-01 1.70530-01 4 89260-01-2 99810 03 9 17640-01-7 10280-03
-7 26390 01-3 40010 03 9 15340-01-5 07500-01-6 66440 01 8 97660 03 9 09200-01
-7 46600-01 1 33550 01-7 30290 03 9 03300-01-8 59840-01-4 28050 01 1 13980 04
 8 97270-01-8 92780-01 3 25350 01 1 57520 05 8 97170-01 1 64330 00 8 80370 02
 1 73280 04 9 13790-01 5 90350 00 9 61520 02-9 93330 04 1 00000 00
 9 00000-01 1 50000 00 5 19000 00 6 65650-01 1 00000 00 5 68710-04 0 00000-01
 1 23020 01 1 00200 00 6 08300-02 1 21770 00 6 99090 00 1 01470 00 2 11250-01
 1 89280 00-7 62930 00 1 04160 00 3 54570-01 1 18170 00 1 86680 01 1 08240 00
 5 46330-01 2 92500 00-2.17070 01 1 13690 00 7 19060-01 1 02800 00 4 99170 01
 1 20820 00 9 83580-01 5 24070 00 2 25830 02 1 29810 00 1 85110 00 2 04770 01
-3 43740 02 1 41750 00 2.45460 00 2 10630 00 1 55680 02 1 55190 00 2 77550 00
 1 02120 01-3 15140 01 1 09760 00 3 27290 00 8 66650 00-4 51410 02 1 84250 00
 3 17580 00-1 12690 01-1 88760 01 1 96030 00 2.71010 00-1 20240 01-1 98300 03
 2 03290 00 1.12920 00-8 00910 01-2 99600 03 2.01900 00-2 50420 00-1 67890 02
 5 78290 03 1.97620 00-4 15840 00-9 51540 01-3 64110 04 1 91620 00-7 43100 00
-4 97370 02 5 58070 03 1 81720 00-1 21580 01-4 42010 02 1 53700 04 1 69260 00
-1 55010 01-3 05440 02-3 57380 04 1 56170 00-1 89040 01-5 80110 02 1 84360 04
 1 42490 00-2 23360 01-4 59210 02 1 46210 05 1 29840 00-2 26230 01 3 50990 02
-2 76640 04 1.19930 00-2 13300 01 2 25990 02-2 33560 04 1 00000 00
 0.00000-01 0 00000-01 0 00000-01 0 00000-01 1 00000 00 0 00000-01 0 00000-01
 0 00000-01 1 00000 00 0.00000-01 0 00000-01 0 00000-01 1 00000 00 0 00000-01
```

```
0.00000D-01  0.00000D-01  1.00000D 00  0  00000-01  0  00000-0:  0  00000-01  1.00000 00
0.00000D-01  0.00000D-01  0.00000D-01  1  00000 00  0.00000-0:  0  00000-01  0  00000-01
1.00000D 00  0.00000D-01  0.00000D-01  0  00000-01  1  00000 00  0  00000-01  0  00000-01
0.00000D-01  1.00000D 00  0.00000D-01  0  00000-01  0.00000-01  1  00000 00  0  00000-01
0.00000D-01  0.00000D-01  1.00000D 00  0  00000-01  0.00000-01  0  00000-01  1  00000 00
0.00000D-01  0.00000D-01  0.00000D-01  1  00000 00  0  00000-01  0  00000-01  0  00000-01
1.00000D 00  0.00000D-01  0.00000D-01  0  00000-01  1  00000 00  0  00000-01  0  00000-01
0 00000D-01  1.00000D 00  0.00000D-01  0  00000-01  0  00000-0:  1  00000 00  0  00000-01
0.00000D-01  0.00000D-01  1.00000D 00  0  00000-01  0.00000-01  0  00000-01  1.00000 00
0.00000D-01  0.00000D-01  0.00000D-01  1  00000 00  0  00000-01  0  00000-01  0  00000-01
1.00000D 00  0.00000D-0'  0.00000D-01  0  00000-01  1  00000 00  0  00000-01  0  00000-01
0.00000D-01  1.00000D 00  0.00000D-01  0  00000-01  0  00000-01  1.00000 00
0.00000D-01  0.00000D-01  0.00000D-01  1  00000 00  0  00000-01  0  00000-01  0  00000-01
0.00000D-01  1.00000D 00  0.00000D-01  0  00000-01  1.00000 00  0  00000-01  0  00000-01
0.00000D-01  0.00000D-01  1.00000D 00  0  00000-01  0.00000-01  1  00000 00  0  00000-01
0.00000D-01  0.00000D-01  0.00000D-01  1  00000 00  0  00000-01  0  00000-01  0  00000-01
1.00000D 00  0.00000D-01  0.00000D-01  0  00000-01  1  00000 00  0  00000-01  0  00000-01
0.00000D-01  1.00000D 00  0.00000D-01  0  00000-01  0.00000-01  1  00000 00  0  00000-01
0.00000D-01  0.00000D-01  1.00000D 00  0  00000-01  0.00000-01  0  00000-01  1  00000 00
0.00000D-01  0.00000D-01  0.00000D-01  1  00000 00  0.00000-01  0  00000-01  0  00000-01
1.00000D 00  0.00000D-01  0.00000D-01  0  00000-01  1  00000 00  0  00000-01  0  00000-01
0.00000D-01  1.00000D 00  0.00000D-01  0  00000-01  0  00000-0:  1  00000 00
0 00000D-01  0.00000D-01  0.00000D-01  0  00000-01  1  00000 00  0  00000-01  0  00000-01
0.00000D-01  1.00000D 00  0.00000D-01  0  00000-01  0  00000-01  1  00000 00  0  00000-01
0.00000D-01  0.00000D-01  1.00000D 00  0  00000-01  0.00000-01  0  00000-01  1  00000 00
0.00000D-01  0.00000D-01  0.00000D-01  1  00000 00  0.00000-0:  0  00000-01  0  00000-01
1.00000D 00  0.00000D-01  0.00000D-01  0  00000-01  1.00000 00  0  00000-01  0  00000-01
0.00000D-01  1.00000D 00  0.00000D-01  0  00000-01  0.00000-01  1  00000 00  0  00000-01
0.00000D-01  0.00000D-01  1.00000D 00  0  00000-01  0.00000-01  0  00000-01  1  00000 00
0.00000D-01  0.00000D-01  0.00000D-01  1  00000 00  0.00000-0:  0  00000-01  0  00000-01
1.00000D 00  0.00000D-01  0.00000D-01  0  00000-01  1.00000 00  0  00000-01  0  00000-01
0.00000D-01  1.00000D 00  0.00000D-01  0  00000-01  0.00000-01  1  00000 00
0 00000D-01  0.00000D-01  0.00000D-01  0  00000-01  1  00000 00  0  00000-01  0  00000-01
0.00000D-01  1.00000D 00  0.00000D-01  0  00000-01  1  00000 00  0  00000-01  0  00000-01
0.00000D-01  0.00000D-01  1.00000D 00  0  00000-01  0.00000-01  0  00000-01  1  00000 00
0.00000D-01  0.00000D-01  0.00000D-01  1  00000 00  0.00000-0:  0  00000-01  0  00000-01
1.00000D 00  0.00000D-01  0.00000D-01  0  00000-01  1.00000 00  0  00000-01  0  00000-01
0.00000D-01  1.00000D 00  0.00000D-01  0  00000-01  0.00000-01  1  00000 00  0  00000-01
0.00000D-01  0.00000D-01  1.00000D 00  0  00000-01  0.00000-01  0  00000-01  1  00000 00
0.00000D-01  0.00000D-01  0.00000D-01  1  00000 00  0.00000-0:  0  00000-01  0  00000-01
1.00000D 00  0.00000D-01  0.00000D-01  0  00000-01  1  00000 00  0  00000-01  0  00000-01
0.00000D-01  1.00000D 00  0.00000D-01  0  00000-01  0  00000-01  1  00000 00  0  00000-01
0.00000D-01  0.00000D-01  1.00000D 00  0  00000-01  0  00000-01  0  00000-01  1  00000 00
0 00000D-01  0.00000D-01  0.00000D-01  1  00000 00  0  00000-01  0  00000-01  0  00000-01
1.00000D 00  0.00000D-01  0.00000D-01  0  00000-01  1  00000 00  0  00000-01  0  00000-0:
0 00000D-01  1.00000D 00  0.00000D-01  0  00000-01  0  00000-01  1  00000 00
0.00000D-01  0.00000D-01  0.00000D-01  0  00000-01  0  00000-01  1  00000 00  0  00000-01
0.00000D-01  1.00000D 00  0.00000D-01  0  00000-01  0  00000-01  1  00000 00  0  00000-01
0.00000D-01  0.00000D-01  1.00000D 00  0  00000-01  0  00000-01  0  00000-01  1  00000 00
0.00000D-01  0.00000D-01  0.00000D-01  1  00000 00  0  00000-01  0  00000-01  0  00000-01
1.00000D 00  0.00000D-01  0.00000D-01  0  00000-01  1  00000 00  0  00000-01  0  00000-01
0.00000D-01  1.00000D 00  0.00000D-01  0  00000-01  0  00000-01  1  00000 00  0  00000-01
0 00000D-01  0.00000D-01  0.00000D-01  1  00000 00  0  00000-01  0  00000-01  0  00000-01
1.00000D 00  0.00000D-01  0.00000D-01  0  00000-01  1.00000 00  0  00000-01  0  00000-01
0 00000D-01  1.00000D 00  0.00000D-01  0  00000-01  0  00000-0:  1  00000 00
```

```
 0 00000-01 0 90000-01 1 28060 00 5 65340 00 1 00000 00-3 53560 00 0 00000-01
 2 78730 02 6.95100-01-2 17030 00 2 75660 01-2 66470 02 5 74050-01-7 48330-01
 1 81580 00 2.12680 01 5.15050-01-4 86610-01 3 79870 00-2 11690 01 4 83300-01
-2 2416D-01 1.82170 00-1 28020 01 4 69240-01-1 13850-01 7 02890-01 3 19770 01
 4.6534D-01 5.9346D-02 3 4016D 00 1 65580 01 4 77930-01 3 2653D-01 4 5.870 00
-9.9530D 01 4.9930D-01 4 2589D-01-8 0044D-01 5 6597D 01 5 2174D-01 4 6099D-01
 2.1479D 00-6 0924D-01 5.4656D-01 5 6425D-01 2 1184D 00 1 0466D 01 5 7372D-01
 6.6812D-01 2 5810D 00 1.1431D 02 6 0373D-01 8 6314D-01 7 1723D 00 4 4268D 01
 6.3788D-01 1.1354D 00 8 6918D 00 3 7442D 02 6 7645D-01 1 5509D 00 1 9664D 01
 1.4064D 03 6.9798D-01 1 9094D 00 3 7352D 01-8 6078D 02 7 2116D-01 2 2695D 00
 2.7843D 01 2.4751D 03 7 4583D-01 2 6751D 00 5 2754D 01 4 1871D 03 7 7236D-01
 3.3143D 00 9.0200D 01 3.7859D 03 8 0079D-01 4 1194D 00 1 1930D 02 1 2302D 04
 8 3123D-01 5.1771D 00 2 0064D 02 3 6032D 04 8 6397D-01 6 9395D 00 4 0006D 02
 1.9165D 04 8.9925D-01 8.9427D 00 4 8666D 02-5 0296D 04 1 0080D 00
 0.0000D-01 0.0000D-01 5.1087D 00 9 5541D 00 1 0000D 00-1 0864D 00 0 0000D-01
 5.4902D 01 9.0135D-01-8 1744D-01 5 4341D 00-3.9519D 01 8 4174D-01-4 7671D-01
 1.6119D 00-2.7871D 00 8 0393D-01-3 3854D-01 1 3521D 00-3 0366D 09 7 7780D-01
-2.2551D-01 1.0585D 00-4 9959D 00 7 6161D-01-1.5121D-01 6 3189D-01 3 5176D 00
 7.5145D-01-8.5355D-02 9.2875D-01 2 2694D 01 7 4897D-01 2 8960D-02 2.4599D 00
-4 6647D 01 7.5284D-01 9.3810D-02-3 3038D-02 2.3023D 01 7.5823D-01 1 2333D-01
 1.1663D 00 1.0879D 01 7.6577D-01 1 9253D-01 1 6930D 00-7 0177D 00 7 7504D-01
 2 6052D-01 1.3827D 00 8 0422D 01 7 8822D-01 3 8012D-01 4 5988D 00 9 5246D 00
 8.0404D-01 5.4358D-01 4.9258D 00 2 3921D 02 8 2309D-01 7 9064D-01 1 1936D 01
 6 9597D 02 8.3420D-01 9.9580D-01 2 0689D 01-2 1839D 02 8 4642D-01 1 2110D 00
 1.8276D 01 9.7951D 02 8 5970D-01 1 4446D 00 2 8135D 01 2 5912D 03 8 7405D-01
 1 7998D 00 5.1309D 01 2.7386D 03 8 8961D-01 2.2750D 00 7 2357D 01 6 0205D 03
 9 0652D-01 2.8851D 00 1.1216D 02 1 8887D 04 9 2474D-01 3 7951D 00 2 1670D 02
 1 1527D 04 9.4428D-01 4.8919D 00 2 6878D 02-2.7779D 04 1 0000D 00
```

```
 RETRIEVAL FILE NO  TPS-10-3
       FILE SIZE =   23
       L/D       =    1.0000
       ALFA      =    1.1250
 0 0000D-01 1.3183D-01 2.5613D-01 3 68540-01 4 66840-01 5 53360-01 6 26840-01
 6.8974D-01 7.4470D-01 7.9250D-01 8 33300-01 8 68220-01 8 96520-01 9 21460-01
 9.4242D-01 9.5158D-01 9 5988D-01 9 67310-01 9 73910-01 9 79700-01 9 84660-01
 9.8888D-01 1.0000D 00
 1 0000D 00 0 0000D-01 2.3887D-01 9 61710-01 1 0000D 00-1 3627D 00 0 0000D-01
 3.1553D 01 8.3240D-01-1 0886D 00 4 15960 00-2 5189D 01 7 2116D-01-7 6613D-01
 1.0285D 00 4.7670D 00 6 4267D-01-6 20390-01 1 5644D 00-1 1166D 01 5 8747D-01
-5.2056D-01 4.6676D-01 1.6219D 01 5 45930-01-4 19480-01 1 8700D 00 1.1777D 00
 5 2023D-01-2.7888D-01 1 9565D 00 7 48800 00 5 06870-01-1 4101D-01 2 4275D 00
 2 5268D 01 5.0349D-01 3.0578D-02 3 81630 00 6.9000D 01 5 1057D-01 2.9180D-01
 7 1142D 00 1.6891D 01 5.2859D-01 5 96170-01 7 80350 00 3 3769D 02 5 5656D-01
 1.0746D 00 1.9596D 01-2 0588D 02 5 94030-01 1 5466D 00 1 3772D 01 6.3837D 02
 6 3854D-01 2.0887D 00 2.9695D 01 3 99530 02 6 8945D-01 2 7987D 00 3 8068D 01
 1.2732D 03 7.1687D-01 3.2012D 00 4 9740D 01 1 9661D 03 7 4533D-01 3 6817D 00
 6.6057D 01 1 8696D 03 7 7462D-01 4 22370 00 7.9937D 01 4 8995D 03 8 0450D-01
 4 8587D 00 1.1231D 02 7.6538D 03 8 3474D-01 5 6365D 00 1 5659D 02 2 1286D 04
 8 6506D-01 6 6755D 00 2.6220D 02 2 5556D 04 8 9522D-01 7 9786D 00 3 6791D 02
-3.2839D 04 1.0000D 00
 0.0000D-01 0.0000D-01 0.0000D-01 0 0000D-01 1 0000D 00 0 0000D-01 0 0000D-01
 0.0000D-01 1.0000D 00 0.0000D-01 0 0000D-01 0 0000D-01 1 0000D 00 0 0000D-01
 0 0000D-01 0.0000D-01 1.0000D 00 0 0000D-01 0 0500D-01 0 0000D-01 1 0000D 00
 0.0000D-01 0.0000D-01 0 0000D-01 1 0000D 00 0 0000D-01 0 0000D-01 0 0000D-01
 1.0000D 00 0.0000D-01 0.0000D-01 0 0000D-01 1 0000D 00 0 0000D-01 0 0000D-01
 0 0000D-01 1.0000D 00 0.0000D-01 0 0000D-01 0 0000D-01 1 0000D 00 0 0000D-01
 0.0000D-01 0.0000D-01 1 0000D 00 0 0000D-01 0 0000D-01 0 0000D-01 1 0000D 00
 0.0000D-01 0.0000D-01 0.0000D-01 1 0000D 00 0.0000D-01 0 0000D-01 0 0000D-01
 1 0000D 00 0.0000D-01 0 0000D-01 0 0000D-01 1 0000D 00 0 0000D-01 0 0000D-01
 0.0000D-01 1 0000D 00 0.0000D-01 0 0000D-01 0 0000D-01 1 0000D 00 0 0000D-01
 0 0000D-01 0 0000D-01 1 0000D 00 0 0000D-01 0 0000D-01 0 0000D-01 1 0000D 00
 0.0000D-01 0 0000D-01 0.0000D-01 1 0000D 00 0 0000D-01 0 0000D-01 0 0000D-01
 1 0000D 00 0.0000D-01 0 0000D-01 0 0000D-01 1.0000D 00 0 0000D-01 0 0000D-01
 0.0000D-01 1.0000D 00
 0 0000D-01 5 0000D-01 2.1327D 01 5 62250 00 1 0500D 00 1 4165D 00 0 0000D-01
-1 3437D 01 1.1808D 00 1 2938D 00-1 7713D 00 1 1961D 01 1 3318D 00 1 1660D 00
-2.8454D-01 3 5105D-01 1 4611D 00 1 .3620 00-2.4508D-01-4 9267D-01 1 5716D 00
 1 1097D 00-2.9351D-01-3.9591D 00 1 6361D 00 1 0699D 00-4 2739D-01-1 5007D 01
 1.7420D 00 9.8328D-01-1.7302D 00-3 6901D 01 1 7969D 00 8 0148D-01-4 0511D 00
-7 7429D 01 1 8347D 00 4 6187D-01-8 3868D 00-9 8062D 01 . 8455D 00-4 7111D-02
-1 2991D 01-2.8756D 02 1.8295D 00-4 1864D-01-2 4725D 01-1 2764D 00 1 7859D 00
-1 6809D 00-2.4770D 01-1 1013D 02 1 7243D 00-2 3223D 00-5 5021D 01-3 1016D 02
 1 6357D 00-4 3137D 00-6 3658D 01-. 7595D 03 1 5236D 00-6 0340D 00-1 0053E 02
-2 0373D 03 1.4638D 00-7 0412D 00-1 1761D 02-1 2365D 03 1 4061.0 00-8 0732D 00
-1 2949D 02-6.4841D 03 1 3422D 00-9 2.32D 00-1 7742D 02 5 7417D 02 1 2775D 00
-1 0374D 01-1.7383D 02-8 5117D 03 1 2142D 00-1 1527D 01-2 2481D 02 9 6404D 04
 1 1562D 00-1.1456D 01 2 5352D 01-. 7197D 04 1 1108D 00-1 0567D 01 1 7903D 02
-1.6007D 04-1 0000D 00
 0 0000D-01 0 0000D-01 5 6501D 00 4 6.400 00 1 0600D 00 2 6126D-01 0 0000D-01
-4.1416D 00 1.0329D 00 2 2527D-01-5 4597D-01 7 3021D 00 1 0577D 00 1 0292D-01
-1 3553D-01 6.1587D-01 1 0776D 00 . 7157D-01-6 6294D-02 5 9275D-01 1 0942D 00
 1 6752D-01-8 0250D-03 7 3889D-01 1 1068D 00 1 6999D-01 5 5901D-02 5 2053D-01
```

```
 1.1214D 00 1.7550D-01 9.4152D-02 1 6576D 00 1 1327D 00 1 8470D-01 1 9841D-01
-2 5211D 00 1.1431D 00 1.9180D-01 5 9342D-02-6 3966D 00 1 1522D 00 1 8736D-01
-2.4589D-01 5.4981D 00 1.1597D 00 1 8190D-01-2.1539D-02-5.7621D 01 1 1657D 00
 1 4601D-01-2 0337D 00 3.6744D 01 1 1691D 00 1 0318D-01-9 9423D-01-5.4766D 01
 1 1713D 00 6.1341D-02-2.3604D 00-2 2756D 02 1 1717D 00-3 8090D-02-7 1291D 00
 6.2988D 01 1.1710D 00-1.0080D-01-6 5517D 00-3.1539D 02 1 1699D 00-1 6603D-01
-9 1692D 00 1.9422D 03 1 1686D 00-1 8058D-01 5.2496D 00-1 1060D 0< 1 1670D 00
-3 8728D-01-6.7821D 01 1.9518D 04 1 1642D 00-4 5300D-01 4 5180D 01-2 2499D 05
 1 1580D 00-2.9987D 00-1.0712D 03-2 9894D 04 1 1360D 00-7 6835D 00-1 1940D 03
 1.0658D 05 1.0000D 00
 0.0000D-01 5 0000D-01 2.6117D-01 2 8117D-02 1 0000D 00 1 4742D 00 0 0000D-01
-5.3265D 00 1.1923D 00 1.4279D 00-7 0217D-01 9 3736D 00 1 3674D 00 1 4130D 00
 4 6296D-01-6.3653D 00 1.5276D 00 1 4249D 00-2 5257D-01 4 0425D 01 1 6729D 00
 1.5954D 00 3.7214D 00-1.0402D 02 1 8136D 00 1 5280D 00-5 2783D 00 1 3728D 02
 1 9207D 00 1.5108D 00 4 8100D 00-2 8129D 02 2.0136D 00 1 2570D 00-1 2882D 01
-3.3711D 02 2.0539D 00 3.9735D-02-3 1411D 01-6 8672D 02 2 0074D 00-2.2460D 00
-6.4234D 01-5.1039D 02 1.8565D 00-5 2921D 00-8 5061D 01 5 0454D 03 1.6556D 00
-5.1860D 00 9.1133D 01-2.8751D 03 1 5345D 00-3 7584D 00 9 7950D 00-4.5277D 03
 1.4321D 00-4.9227D 00-1.0315D 02-1 3303D 04 1 2859D 00-1 0005D 01-3 8193D 02
 4 8618D 04 1.1844D 00-1.1464D 01 6 3750D 01-7 2723D 04 1 0845D 00-1 3439D 01
-5 3980D 02 2.4012D 04 9.7150D-01-1 6785D 01-3 6152D 02 6 9814D 04 8 5607D-01
-1.7650D 01 9.9710D 01-7.3313D 04 7 5326D-01-1 8300D 01-3 2444D 02 9 3869D 05
 6 7758D-01-8.3551D 00 4.3331D 03 1 1200D 05 6.8141D-01 1 0525D 01 4.7963D 03
-4.2811D 05 1.0000D 00
 0 0000D-01 1.5000D 00 2.8375D 00 2 7726D 00 1 0000D 00-4 4817D-01 0 0000D-01
-1.1846D 01 9.3640D-01-5.5110D-01-1 5616D 00 2.4187D 01 8 6357D-01-5 5836D-01
 1.4448D 00 1.2294D 00 8.1023D-01-3 8818D-01 1 5830D 00-3 6.79D 00 7.7914D-01
-2 5005D-01 1.2273D 00 1.1998D 01 7 6340D-01-9 8969D-02 2 2653D 00 2 3800D 00
 7.6240D-01 7.3924D-02 2.4402D 00-1 5921D 01 7 7121D-01 1 9591D-01 1 4389D 00
-3.2938D 01 7.8324D-01 2.2524D-01-3 7154D-01 1 1432D 02 7.9566D-01 3 3807D-01
 5 0926D 00-3 3952D 02 8.0985D-01 2 6320D-01-8 7617D 00 1 3701D 03 8 2343D-01
 7.9268D-01 3.9085D 01-2.5534D 03 8 5186D-01 6 7659D-01-3 3153D 01 1.8094D 03
 8.6809D-01 6.1254D-01 1 1982D 01-1 6589D 03 8.8102D-01 4 9938D-01-2 2782D 01
-6.0027D 02 8.8456D-01 2.6532D-01-2 8285D 01 1 7858D 03 8 8596D-01 9 2074D-02
-1.3464D 01-9.5732D 03 8.8562D-01-2 7170D-01-8 4535D 01 9 0430D 03 8 8241D-01
-6.3284D-01-2 4791D 01-1.7560D 03 8 7928D-01-8.0569D-01-3 4962D 01 2.0007D 05
 8.7792D-01 1.4836D 00 9.5775D 02 2 3774D 04 8 9253D-01 5 6485D 00 1 0561D 03
-9.4266D 04 1.0000D 00
 0 0000D-01 1.0000D 00 7.2014D 00 8 6970D 00 1 0000D 00-1 5973D 00 0 0000D-01
 4.2242D 01 8.0556D-01-1 2303D 00 5 5686D 00-3 2456D 01 6 8527D-01-7 8881D-01
 1.5344D 00 1.7912D 00 6 0672D-01-6 0501D-01 1 7357D 00-6 6205D 00 5 5458D-01
-4.6637D-01 1.0849D 00 3.7679D 00 5 1870D-01-3 5841D-01 1 4109D 00 3 0155D 00
 4 9637D-01-2.4659D-01 1.6325D 00-1 8469D 00 4 3402D-01-1 4757D-01 1 5163D 00
-1.7003D 00 4.7815D-01-6.6795D-02 1 4229D 00 6 0352D 01 4 7768D-01 7 0151D-02
 4 3075D 00-1.0926D 02 4.8299D-01 1 5496D-01-1 5099D-01 6 1250D 02 4 9256D-01
 5 2316D-01 2.1238D 01-9.0207D 02 5 1245D-01 7 6302D-01-4 2817D 00 9 9318D 02
 5 3272D-01 9.6520D-01 2.0493D 01-1 0998D 03 5 5576D-01 1 1532D 00-2 5545D 00
 7.5509D 02 5.6632D-01 1.1615D 00 4 3674D 00 5 6559D 03 5 7665D-01 1 3925D 00
 5 1308D 01 1 1077D 03 5.8848D-01 1 8029D 00 5 9531D 01 2 3037D 04 6 0280D-01
 2 7000D 00 2 1173D 02 2 2114D 04 6 2268D-01 4 2950D 00 3 3966D 02 2 8930D 05
 6 5406D-01 9.5415D 00 1.7751D 03 9 9269D 04 7 0989D-01 1 7733D 01 2 1857D 03
-1.9509D 05 1.0000D 00
 0.0000D-01 0.0000D-01 0.0000D-01 0 0000D-01 1.0000D 00 0 0000D-01 0 0000D-01
 0.0000D-01 1.0000D 00 0.0000D-01 0 0000D-01 0 0000D-01 1 0000D 00 0 0000D-01
```

```
0 00000D-01 0 00000D-01 1 00000D 00 0 00000D-01 0 00000D-01 0 00000D-01 1 00000D 00
0 00000D-01 0.00000D-01 0 00000D-01 1 00000D 00 0 00000D-01 0 00000D-01 0 00000D-01
1.00000D 00 0.00000D-01 0.00000D-01 0 00000D-01 1 00000D 00 0 00000D-01 0 00000D-01
0 00000D-01 1.00000D 00 0.00000D-01 0 00000D-01 0 00000D-01 1 00000D 00 0 00000D-01
0.00000D-01 0.00000D-01 1.00000D 00 0 00000D-01 0 00000D-01 0 00000D-01 1 00000D 00
0.00000D-01 0.00000D-01 0.00000D-01 1 00000D 00 0 00000D-01 0 00000D-01 0 00000D-01
1.00000D 00 0.00000D-01 0 00000D-01 0 00000D-01 1 00000D 00 0 00000D-01 0 00000D-01
0 00000D-01 1.00000D 00 0 00000D-01 0 00000D-01 0 00000D-01 1 00000D 00 0 00000D-01
0.00000D-01 0 00000D-01 1.00000D 00 0 00000D-01 0 00000D-01 0 00000D-01 1 00000D 00
0.00000D-01 0.00000D-01 0.00000D-01 1 00000D 00 0 00000D-01 0.00000D-01 0 00000D-01
1.00000D 00 0.00000D-01 0.00000D-01 0 00000D-01 1 00000D 00 0 00000D-01 0 00000D-01
0.00000D-01 1.00000D 00
0 00000D-01 0 00000D-01 0 00000D-01 0 00000D-01 1 00000D 00 0 00000D-01 0 00000D-01
0.00000D-01 1.00000D 00 0 00000D-01 0 00000D-01 0 00000D-01 1 00000D 00 0 00000D-01
0 00000D-01 0.00000D-01 1.00000D 00 0 00000D-01 0 00000D-01 0 00000D-01 1 00000D 00
0.00000D-01 0.00000D-01 0.00000D-01 1 00000D 00 0 00000D-01 0 00000D-01 0 00000D-01
1.00000D 00 0.00000D-01 0 00000D-01 0 00000D-01 1 00000D 00 0 00000D-01 0 00000D-01
0.00000D-01 1.00000D 00 0 00000D-01 0 00000D-01 0 00000D-01 1 00000D 00 0 00000D-01
0.00000D-01 0.00000D-01 1.00000D 00 0 00000D-01 0 00000D-01 0 00000D-01 1 00000D 00
0.00000D-01 0 00000D-01 0.00000D-01 1 00000D 00 0 00000D-01 0 00000D-01 0 00000D-01
1.00000D 00 0.00000D-01 0.00000D-01 0 00000D-01 1 00000D 00 0.00000D-01 0 00000D-01
0.00000D-01 1.00000D 00
0.00000D-01 0.00000D-01 0.00000D-01 0.00000D-01 1.00000D 00 0 00000D-01 0 00000D-01
0.00000D-01 1.00000D 00 0.00000D-01 0 00000D-01 0 00000D-01 1 00000D 00 0 00000D-01
0.00000D-01 0.00000D-01 1.00000D 00 0 00000D-01 0 00000D-01 0 00000D-01 1 00000D 00
0.00000D-01 0.00000D-01 0.00000D-01 1 00000D 00 0 00000D-01 0 00000D-01 0 00000D-01
1 00000D 00 0.00000D-01 0.00000D-01 0 00000D-01 1 00000D 00 0 00000D-01 0 00000D-01
0 00000D-01 1.00000D 00 0.00000D-01 0 00000D-01 0 00000D-01 1 00000D 00 0 00000D-01
0.00000D-01 0.00000D-01 1.00000D 00 0 00000D-01 0 00000D-01 0 00000D-01 1.00000D 00
0.00000D-01 0.00000D-01 0.00000D-01 1 00000D 00 0 00000D-01 0 00000D-01 0 00000D-01
1.00000D 00 0.00000D-01 0 00000D-01 0 00000D-01 1 00000D 00 0 00000D-01 0 00000D-01
0.00000D-01 1.00000D 00
```

```
 0 0000D-01 0.0000D-01 2 8323D 00 9 5064D 00 1 0000D 00-2 4621D 00 0 0000D-01
 1.0917D 02 7.1711D-01-1 5136D 00 1 4391D 01-1 0843D 02 6 0544D-01-5 6239D-01
 9 1376D-01 1.3367D 01 5 5116D-01-3 7521D-01 2 4164D 00-1 2925D 01 5 2390D-01
-2 0012D-01 1 1459D 00 4 3001D 00 5 1134D-01-8 4890D-02 1 5179D 00 9 7830D-01
 5 0927D-01 2.9296D-02 1 5898D 00 4 1172D 00 5 1442D-01 1 3743D-01 1 8488D 00
 1 0426D 01 5.2506D-01 2.5479D-01 2 4218D 00 3 4826D 01 5 4064D-01 4.1033D-01
 4 0864D 00 1 1231D 01 5.6091D-01 5 8643D-01 4 5447D 00 3 4413D 02 5.8660D-01
 9 5497D-01 1 6562D 01-3.4242D 02 6 1896D-01 1 2865D 00 6 8749D 00 6 3933D 02
 6.5484D-01 1 6569D 00 2.2823D 01 4 0922D 02 6 9529D-01 2 2250D 00 3.1398D 01
 2.1605D 03 7.1719D-01 2.6036D 00 5 1204D 01 1 4634D 03 7 4071D-01 3.0790D 00
 6.3349D 01 3.8072D 03 7.6557D-01 3.6542D 00 9.1614D 01 6 3230D 03 7 9201D-01
 4.3975D 00 1.3339D 02 1.2828D 04 8.2010D-01 5.3839D 00 2 0760D 02 3.6555D 04
 8.5012D-01 6.8639D 00 3.8898D 02 2 4825D 04 8 8213D-01 8 6852D 00 4 9166D 02
-4.3885D 04 1.0000D 00
 0.0000D-01 0.0000D-01 7.2014D 00 1 3309D 01 1 0000D 00-1 0463D 00 0 0000D-01
 3.4178D 01 8.7512D-01-7.4933D-01 4 5056D 00-2.8775D 01 8 0757D-01-4 1158D-01
 9.2895D-01 1.8586D 00 7.6762D-01-2 9541D-01 1 1379D 00-3 8702D 00 7 4346D-01
-2.0225D-01 7.5743D-01 1 7949D 00 7 2899D-01-1 3001D-01 9 1272D-01 2.1861D 00
 7 2205D-01-5.7032D-02 1 0734D 00 2 7415D 00 7 2070D-01 1 5899D-02 1 2458D 00
 6.8523D 00 7 2364D-01 9 4721D-02 1 6224D 00 2 5356D 01 7 3048D-01 2 0123D-01
 2.8343D 00-9.3701D-01 7 4104D-01 3 1611D-01 2.7961D 00 1 5874D 02 7 5491D-01
 5.1054D-01 8.3396D 00-1 0514D 02 7 7230D-01 7 0440D-01 5 3651D 00 3 5741D 02
 7.9246D-01 9.4943D-01 1 4280D 01 2 8989D 02 8 1594D-01 1 3123D 00 2.0355D 01
 9.1745D 02 8.2894D-01 1 5375D 00 2 8766D 01 1 3241D 03 8 4285D-01 1 8322D 00
 4.2245D 01 2.2527D 03 8 5777D-01 2 2079D 00 5 8969D 01 2 8246D 03 8 7378D-01
 2.6591D 00 7.7630D 01 9.2960D 03 8 9076D-01 3.2623D 00 1 3089D 02 2 0629D 04
 9.0890D-01 4.1657D 00 2 3325D 02 1 6250D 04 9 2839D-01 5 2695D 00 3 0046D 02
-2.6819D 04 1.0000D 00
```

```
 RETRIEVAL FILE NO  TP5-10-4
       FILE SIZE =   21
       L/D       =    1.0000
       ALFA      =    1.1250
 0.0000D-01 2 7160D-01 4 7260D-01 6 0779D-01 6 9774D-01 7 6:06D-01 8 0605D-01
 8.4404D-01 8.7311D-01 8.9714D-01 9 :7080-01 9 3403D-01 9 4829D-01 9 6045D-01
 9 7067D-01 9.7518D-01 9 7919D-01 9 8262D-01 9 8606D-01 9 8892D-01 : 0000D 00
 1.0000D 00 9 0000D-01 1 0946D-01 9 4761D-01 1 0000D 00-: 1892D 00 0 0000D-01
 9.0947D 00 7.0738D-01-8.5376D-01 2 4701D 00-: 1707D 01 5 6985D-01-5 9366D-01
 1.1788D-01 1.0202D 01 4 9485D-01-4 8449D-01 1 4972D 00 7 5333D 00 4 5825D-01
-3 1927D-01 2 1766D 00 2 8411D 01 4 4360D-01-1 2450D-01 3 9755D 00 8 9768D 01
 4.4369D-01 1.6139D-01 8.1934D 00 7 1261D 01 4 5576D-01 5 0246D-01 1 0758D 01
 1 7624D 02 4 7523D-01 8 8965D-01 : 5881D 01 4 5642D 02 5 0224D-01 1 4029D 00
 2 6847D 01 2.1653D 02 5 3584D-01 1 9813D 00 3 1165D 01 : 2951D 03 5 7496D-01
 2.6958D 00 5 3121D 01 5.8011D 02 6 1910D-01 3 5125D 00 6 1396D 01 3 5011D 03
 6 6740D-01 4.5179D 00 1 0397D 02 7 9304D 02 7 1914D-01 5 6219D 00 : 1207D 02
 2 7179D 04 7.4606D-01 6.4042D 00 2 3470D 02-9 0961D 03 7 7350D-01 7 2713D 00
 1.9826D 02 2.6240D 04 8.0137D-01 8 1625D 00 2 9340D 02 2 8473D 04 8 2957D-01
 9 2671D 00 3 8741D 02 6.9298D 04 8 5796D-01 : 0661D 01 5 8586D 02-5 2894D 04
 1.0000D 00
 0.0000D-01 0.0000D-01 0.0000D-01 0 0000D-01 : 0000D 00 0 0000D-01 0 0000D-01
 0.0000D-01 1.0000D 00 0.0000D-01 0 0000D-01 0 0000D-01 : 0000D 00 0 0000D-01
 0 0000D-01 0.0000D-01 1.0000D 00 0 0000D-01 0 0000D-01 0 0000D-01 1 0000D 00
 0.0000D-01 0.0000D-01 0.0000D-01 1 0000D 00 0 0000D-01 0 0000D-01 0 0000D-01
 1.0000D 00 0 0000D-01 0 0000D-01 0 0000D-01 : 0000D 00 0 0000D-01 0 0000D-01
 0.0000D-01 1.0000D 00 0.0000D-01 0 0000D-01 0 0000D-01 : 0000D 00 0 0000D-01
 0.0000D-01 0.0000D-01 1 0000D 00 0 0000D-01 0 0000D-01 0 0000D-01 1 0000D 00
 0.0000D-01 0.0000D-01 0.0000D-01 1 0000D 00 0 0000D-01 0 0000D-01 0 0000D-01
 1.0000D 00 0 0000D-01 0 0000D-01 0 0000D-01 1 0000D 00 0 0000D-01 0 0000D-01
 0.0000D-01 1.0000D 00 0 0000D-01 0 0000D-01 0 0000D-01 : 0000D 00 0 0000D-01
 0 0000D-01 0 0000D-01 1 0000D 00 0 0000D-01 0 0000D-01 0 0000D-01 1 0000D 00
 0.0000D-01 0.0000D-01 0.0000D-01 1 0000D 00 0 0000D-01 0 0000D-01 0 0000D-01
 1.0000D 00 0 0000D-01 0 0000D-01 0 0000D-01 1 0000D 00 0 0000D-01 0 0000D-01
 0.0000D-01 1.0000D 00 0 0000D-01 0 0000D-01 0 0000D-01 : 0000D 00 0 0000D-01
 0 0000D-01 0 0000D-01 1 0000D 00 0 0000D-01 0 0000D-01 0 0000D-01 1 0000D 00
 0.0000D-01 0.0000D-01 0 0000D-01 1 0000D 00 0 0000D-01 0 0000D-01 0 0000D-01
 1.0000D 00
 0.0000D-01 5.0000D-01 2.9506D 01 6 8439D 00 1 0000D 00 : 3631D 00 0 0000D-01
-3 0310D 00 1.3601D 00 1.2513D 00-8 2322D-01 4 3279D 00 1 6068D 00 1 1733D 00
 4 6703D-02-1.0624D 01 1.7555D 00 1 0825D 00-1 3896D 00-3 4546D 01-1 8431D 00
 8 1773D-01-4.4970D 00-8.7598D 01 1 9821D 00 3 5738D-01-1 0044D-01-1 5057D 02
 1.8852D 00-2.8074D-01-1.7119D 01-2 8577D 02 1 8618D 00-1 0820D 00-2 7405D 01
-4 5041D 02 1 8169D 00-2.0689D 00-4 0490D 01-4 8518D 02 : 7544D 00-3 1819D 00
-5 2154D 01-1.1717D 03 1 6790D 00-4.4548D 00-7 5517D 01-8 1817D 02 1 5920D 00
-5.8526D 00-8.9338D 01-2.4484D 03 1 4982D 00-7 3768D 00-1 2431D 02-3 8169D 03
 1 3982D 00-9 1707D 00-1 7073D 02 1 5152D 03 : 2958D 00-1 0836D 01-1 5524D 02
-1 3875D 05 1 2432D 00-1 2949D 01-7 8125D 02 7 8194D 05 : 1935D 00-9 7572D 00
 2 3749D 03-2 0020D 06 1 1579D 00-1 4304D 01-4 8832D 03 2 3823D 06 1 0993D 00
-1 7608D 01 2.8468D 03-4 3413D 05 1 0582D 00-1 1236D 01 : 6023D 03-1 4478D 05
 1 0000D 00
 0.0000D-01 0.0000D-01 4.0900D 00 3 1590D 00 1 0900D 00 2 9798D-01 0 0000D-01
-1.3835D 00 1.0763D 00 2 4695D-01-3 7574D-01 2 4476D 00 : 1217D 00 2 2087D-01
 1 1622D-01 7.8113D-01 1.1529D 00 2 4372D-01 2 2183D-01 5 4608D-01 1 1758D 00
 2 6589D-01 2.7113D-01 5 3158D 00 1 1934D 00 2 9271D-01 6 0772D-01-7 6586D 00
 1 2077D 00 3 1381D-01 2 4787D-01 2 0557D 01 1 2194D 00 3 3605D-01 9 8781D-01
-3 6989D 01 1.2294D 00 3 4914D-01-8 7421D-02 5 5736D 01 : 2379D 00 3 6312D-01
 1.2517D 00-9.8980D 01 1 2452D 00 3 6841D-01-7 2194D-01 4 8896D 01 1 2514D 00
 3 6319D-01 1.0703D-01-4 5316D 02 1 2564D 00 3 1862D-01-6 3570D 00 6 3637D 02
```

```
 1 2600D-00 2.8836D-01 1 3812D 00 5 9161D 02 1 2631D 00 3 3337D-01 7 4271D 00
-7.4293D 03 1.2646D 00 2 9126D-01-2 6093D 01-3 3363D 04 1 2652D 00-8 0892D-02
-1 5973D 02-1.5572D 04 1.2637D 00-7.6232D-01-2.1018D 02-5 9671D 05 1 2567D 00
-4.6051D 00-2.1524D 03-1.6462D 05 1 2340D 00-1.1444D 01-2 6238D 03 2.3689D 05
 1.0000D 00
 0.0000D-01 5.0000D-01 2.6704D-01 3 3247D-02 1 0000D 00 1 4432D 00 0 0000D-01
 1 1735D 00 1.3956D 00 1 4855D 00 3 1872D-01 1 0699D 01 1 7151D 00 1 7657D 00
 2 4693D 00-9.0295D 00 1.9727D 00 2 0170D 00 1 2485D 00 7 8634D 09 2 1601D 00
 2 1611D 00 1.9558D 00-2 2640D 02 2 2913D 00 1 8311D 00-1 2388D 01-1 1793D 02
 2.3616D 00 1.1192D 00-1.7921D 01-9 8381D 02 2.3826D 00-1 6312D-01-5 3332D 01
-1.5121D 03 2.3492D 00-2.3523D 00-9 7288D 01-4 3480D 02 2 2636D 00-4 8151D 00
-1.0773D 02-4.6639D 03 2.1400D 00-7 8904D 00-2 0073D 02-4 1316D 03 1 9740D 00
-1 1887D 01-2.7077D 02-3.1890D 03 1 7754D 00-1 6074D 01-3 1626D 02-1 0264D 04
 1 5516D 00-2 1122D 01-5.1404D 02 2 9589D 04 1 3142D 00-2 4821D 01-2.1166D 02
-1.7990D 05 1.1973D 00-2 7616D 01-1 0223D 03 4 4056D 05 1 0832D 00-2 8181D 01
 7 4138D 02-9.3924D 04 9.8511D-01-2 6111D 01 4 0066D 02 1 1065D 06 9 0879D-01
-1.8985D 01 3 9913D 03 2.9846D 05 8 7196D-01-6 3313D 00 4 8459D 03-4 3751D 05
 1.0000D 00
 0 0000D-01 1.5000D 00 1 2414D 01 2 7039D 00 1 0000D 00-1 3854D-01 0 0000D-01
-2.4277D 00 9.5427D-01-2.2808D-01-6 5937D-01 1 2688D 00 8 9682D-01-3 3498D-01
-4 0433D-01 1.1098D 00 8.4829D-01-3 7950D-01-2 5430D-01 1 1452D 01 8 1452D-01
-3.5605D-01 7.7576D-01 1 6451D 01 7 9423D-01-2.7395D-01 1 8174D 00 1 0240D 02
 7 8513D-01-7.5531D-02 6.6286D 00-6 3807D 00 7 8666D-0. 1 5892D-01 6 3989D 00
-8.3770D 01 7.9364D-01 3 0954D-01 3 9639D 00 6 0667D 02 8 0362D-01 5 7969D-01
 1 8525D 01-1.2766D 03 8.1717D-01 6 9523D-01-6 9498D 00 2 3021D 03 8 2983D-01
 9.0865D-01 3.2100D 01-3.9030D 03 8.4417D-01 9 6946D-01-2 3574D 01 6 5142D 03
 8 5617D-01 1.1644D 00 5.5639D 01-3 0103D 04 8 6562D-01 1 6111D-01-2 5199D 02
 1.5905D 05 8 6622D-01 6.4306D-01 4 6563D 02-1 4809D 05 8 7094D-01 1 3201D 00
-1.2756D 02 7.8325D 04 8.7551D-01 1 3724D 00 1 5641D 02 2 1532D 05 8 8202D-01
 3.0135D 00 8 5508D 02 6.2383D 04 8 9440D-01 5 7179D 00 1 0327D 03-9 7330D 04
 1 0000D 00
 0 0000D-01 1.0000D 00 1 6909D 01 8 7990D 00 1 0000D 00-7 0501D-01 0 0000D-01
 2 4956D 00 8.1685D-01-6 1297D-01 8 7779D-01-4 3509D 00 7 0145D-01-5 6463D-01
-1 9675D-01 1.1554D 00 6.2379D-01-5 8067D-01-4 0548D-02 4 7981D 00 5 7196D-01
-5.6490D-01 3 9103D-01 1 1850D 01 5 3749D-01-5 1639D-01 1 1413D 00 5 7893D 01
 5 1549D-01-3 9886D-01 3.8615D 00 3 7166D 01 5 0393D-01-2 3579D-01 5 1992D 00
 4.4784D 01 4.9945D-01-6 5738D-02 6 5010D 00 3 9404D 02 5 0066D-01 2 0417D-01
 1 5968D 01-3.4249D 02 5 0745D-01 4 5448D-01 9 1387D 00 1 4326D 03 5 1704D-01
 8 1617D-01 3 3529D 01-2.4992D 03 5 3148D-01 1 0462D 00-2 1209D 00 7 4092D 03
 5 4620D-01 1.5620D 00 8.7939D 01-5 9538D 03 5 6569D-01 2 1568D 00 2 7500D 01
 9 9012D 04 5.7719D-01 3.2817D 00 4 7402D 02-2 5046D 04 5 9381D-01 4 9792D 00
 3 7354D 02 1.1004D 05 6 1525D-01 7 0567D 00 7 7249D 02 3 4352D 05 6 4429D-01
 1 1477D 01 1.9520D 03 2 7629D 05 6 8624D-01 1 8200D 01 2 7452D 03-2 4767D 05
 1 0000D 00
 0 0000D-01 0 0000D-01 0.0000D-01 0 0000D-01 1 0000D 00 0 0000D-01 0 0000D-01
 0.0000D-01 1 0000D 00 0.0000D-01 0 0000D-01 0 0000D-01 1 0000D 00 0 0000D-01
 0 0000D-01 0 0000D-01 1.0000D 00 0 0000D-01 0 0000D-01 0 0000D-01 1 0000D 00
 0 0000D-01 0.0000D-01 0 0000D-01 1 0000D 00 0 0000D-01 0 0000D-01 0 0000D-01
 1 0000D 00 0.0000D-01 0 0000D-01 0 0000D-01 1 0000D 00 0 0000D-01 0 0000D-01
 0 0000D-01 1.0000D 00 0 0000D-01 0 0000D-01 0 0000D-01 1 0000D 00 0 0000D-01
 0 0000D-01 0 0000D-01 1 0000D 00 0 0000D-01 0 0000D-01 0 0000D-01 1 0000D 00
 0 0000D-01 0.0000D-01 0.0000D-01 1 0000D 00 0 0000D-01 0 0000D-01 0 0000D-01
 1 0000D 00 0 0000D-01 0 0000D-01 0 0000D-01 1 0000D 00 0 0000D-01 0 0000D-01
 0.0000D-01 1.0000D 00 0.0000D-01 0 0000D-01 0 0000D-01 1 0000D 00 0 0000D-01
```

```
1.0000D 00
0 0000D-01 0 0000D-01 1 6913D 01 7 0147D 01 1 [illegible] 1426D-01 0 0000D-01
8 3550D 00 8 0673D-01-5 0610D-01 2 2[illegible]2D 00-1 [illegible] 7 [illegible]-01-2 6952D 01
8.4776D-02 4.5213D 00 7.0235D-01-2 1[illegible]D-01 [illegible] 7 7[illegible]D 00 6 86[illegible]-01
-1 3910D-01 1 0303D 00 1 2306D 01 6 [illegible]-01-4 [illegible] 8[illegible]D 00 3 8[illegible]D 01
6 8024D-01 7.7959D-02 3 6031D 00 3 9927D 01 6 [illegible]-01 7 3[illegible]D-01 5 0402D 00
8 8254D 01 6.9497D-01 4 1731D-01 7 [illegible]D 00 [illegible] 6 6022D-01
1 2615D 01 1.5072D 02 7.2355D-01 9 4[illegible]D-01 1 [illegible] 5[illegible]D 0[illegible] 7 4237D-01
1 3145D 00 2 8353D 01 4.4595D 02 7 [illegible]-01 1 [illegible] 2 5[illegible]D 0[illegible]
7.8900D-01 2 3743D 00 6 5560D 01 [illegible] 02 8 [illegible]-01 7 [illegible]D 00 7 7[illegible]D 01
2 1089D 04 8 3202D-01 3 6695D 00 1 7264D 02-5 6[illegible] 3 4[illegible]D-01 4 3[illegible]D 00
1 5014D 02 2.3284D 04 8 6488D-01 5 0265D 00 2 4[illegible] 3 [illegible]D 04 8 8264D-01
5 9746D 00 3 4253D 02 4 6872D 04 9 0[illegible]-01 [illegible] 00 4 7[illegible]D 02-4 3044D 04
1 0000D 00
```

APPENDIX E

LISTING OF SOURCE PROGRAM

```
C      NEW RSVP DATA
C SYSCOM SERIES       OPERATIONAL RSVP FOR AFFDL,B (PTN)       1 AUGUST 1977
       $OLIST
       IMPLICIT REAL*8 (A-H,O-Z)
       INTEGER*2 FN3(16),FN2(16),FN1(16)
       LOGICAL ANS
       DIMENSION Y(40),X(51),XO(51),XC(51),YC(51),ZEP(6,5)
       DIMENSION ZD(40),Z(3,40),IC(3),BL(3),AST(2),BLK(2),FRC(51)
       DIMENSION XPLNC(51)
       KW1=1
       KW2=2
       KW3=3
       KW4=4
       KW5=5
       KW6=6
       KW7=7
       ANS=.FALSE.
       LN=20
       ANS=OPNPSA('ENTER DATA TABLE NAME',21,A$READ+A$OLD+A$DIRF,FN3,LN,KW3)
       IF(ANS) GO TO 1001
       WRITE(1,1001)
1001   FORMAT('ERROR IN OPENING DATA TABLE')
       CALL EXIT
C
C       READ IN DATA TABLE INDEX AND ASSIGN VARS
C
1000   ANS=RUNI$A(KW3)
       READ(KT,1002)(FN2(I),I=1,16),NN,AL9,ALF
1002   FORMAT(20X,16A2/13X,3(F10.4,18X),F10.4)
       READ(KT,1003)(XC(I),I=1,NN)
1003   FORMAT(7D11.4)
       YM=NN-1
       PI=DATAN(1.0D+00)
       P2=2.0*PI
       ANS=OPNPSA('ENTER OUTPUT FILE NAME',22,A$WRIT+A$OLD,FN1,LN,KW1)
       IF(ANS) GO TO 1005
       WRITE(1,1004)
1004   FORMAT('ERROR IN OPENING OUTPUT FILE')
       CALL EXIT
1005   WRITE(6,1006)(FN2(I),I=1,16),NN,AL9,ALF
1006   FORMAT(19H RETRIEVAL FILE NO. ,1X,16A2/18H        FILE SIZE =,I5/
      +       18H        L/D        =,F10.4/7X,4HALFA,6X,1H=,F10.4/1H )
       KPAGE=5
C
C      SELECT DATA EXTRACTION MODE
C
101    WRITE(1,1010)
1010   FORMAT(/41HSELECT:   (1) PREPARE DATA FOR RSVP INPUT/10X,
      +21H(2) DIMENSIONAL TABLE/10X,23H(3) DIMENSIONLESS TABLE/10X,
      +8H(4) QUIT)
       READ(1,*)NSEL
       IF (NSEL.EQ.4) CALL EXIT
       WRITE(1,1011)
1011   FORMAT(/28HSELECT:   (1) SYNCH FREQ, OR/10X,
      +16H(2) ASYNCH FREQ?)
```

```
      READ (1,*) NSYN
      IF (NSYN EQ.2) GO TO 1020
      LFREQ = 1
      FRRAT = 1.0
      GO TO 1030
1020  WRITE(1,1021)
1021  FORMAT(5X,28HENTER NUMBER OF FREQ GROUPS?)
      READ (1,*) LFREQ
1030  GO TO (2100,2100,2200,102),NSEL
      GO TO 101
102   CALL EXIT
C
C     INPUT BEARING DESIGN DATA
C
2100  WRITE(1,2101)
2101  FORMAT(25HENTER BEARING LENGTH (IN))
      READ(1,*) ALEN
      WRITE(1,2102)
2102  FORMAT(27HENTER BEARING DIAMETER (IN))
      READ(1,*)ADIA
      WRITE(1,2103)
2103  FORMAT(28HENTER BEARING CLEARANCE (IN))
      READ(1,*) ACLE
      WRITE(1,2104)
2104  FORMAT(29HENTER VISCOSITY (CENTI-POISE))
      READ(1,*) ACPO
      WRITE(1,2105)
2105  FORMAT(24HENTER BEARING LOAD (LBS))
      READ(1,*) ALOA
      IF(NSEL.EQ.2) GO TO 2106
      ANS=OPNF$A('ENTER BEARING COEFS FILE NAME',20,FSWRIT*4FSAMF,
     +FN3,LN,KW2)
      IF(ANS) GO TO 2106
      WRITE(1,2131)
2131  FORMAT(36H ERROR IN OPENING BEARING COEFS FILE)
      CALL EXIT
C
C     SPEED INDEPENDENT SCALING CONSTANTS
C
2106  COR = 2.0*ACLE/ADIA
      ALS=ALEN/ADIA
      AREA=ALEN*ADIA
      REYN=1.4503773*4D-07*ACPO
      ALOAD=REYN*AREA
      BHP=P4/1.182D+07*ALOAD*ADIA*ADIA/ACLE
      ALOAD=ALOAD/COR/COR
      BCPM=AREA*ACLE/2.710+02
      IF(AL8 EQ AL9) GO TO 2107
      WRITE(1,1040) AL9,AL8
1040  FORMAT(/31HSELECT:   (1) USE DEFAULT L/D = F10.4/
     +10X,25H(2) ADJUST DATA FOR L/D =,F10.4,1H )
      READ(1,*)NAL
      IF(NAL.EQ.1) GO TO 2107
      WFAC=SHORT(AL9,AL8,ALF)
```

```
      GO TO 2108
2107  WFAC=1.0
      AL8=AL9
2108  ALOAD=ALOAD/WFAC
      BLOAD=ALOAD/60.0
      BSTIF=BLOAD/ACLE
      BDAMP=ALOAD/ACLE/P4/8.0
      BLOA=ALOA/BLOAD
      WRITE(1,2109)
2109  FORMAT(/47HSELECT:   (1) LOAD VECTOR IN VERTICAL PLANE, OR/10X,
     +25H(2) INCLINED LOAD VECTOR?)
      READ (1,*) NVEC
      IF (NVEC.EQ.1) GO TO 2135
      WRITE(1,2132)
2132  FORMAT(5X,35HENTER LOAD INCLINATION ANGLE (DEG)?)
      READ (1,*) WANG
      WRAD = WANG*P2/9.0D+01
      CC = DCOS(WRAD)
      SS = DSIN(WRAD)
      ROT(1) = CC*CC
      ROT(2) = CC*SS
      ROT(3) = SS*SS
2135  CALL BASE(NBA,BMA,BST,BDA)
C
C     SPEED LOOP FOR ARCTAN PARAMETER
C
      NMAX=11
      IF(NSEL.EQ.2) NMAX=51
2110  WRITE(1,2111)
2111  FORMAT(24HENTER LOWEST SPEED (RPM))
      READ(1,*) RPM1
      WRITE(1,2112)
2112  FORMAT(25HENTER HIGHEST SPEED (RPM))
      READ(1,*) RPM2
      WRITE(1,2113) NMAX
2113  FORMAT(43HENTER NUMBER OF SPEED POINTS (NOT MORE THAN,I3,1H))
      READ(1,*) NRPM
      IF(NRPM GT.1) GO TO 2120
      SPRAT=1.0
      GO TO 2130
2120  XP=1.0/(NRPM-1)
      SPRAT=(RPM2/RPM1)**XP
2130  RPM=RPM1
      NTAB=NRPM
      WRITE(6,2141) ALEN,ADIA,ACLE,ACPO,ALOA,RPM1,RPM2,NRPM
2141  FORMAT(2X,6HL (IN),3X,8HDIA (IN),3X,6HC (IN),3X,9HVISC (CP),2X,
     +7HW (LBS),7X,17HSPEED RANGE (RPM),/2(1X,F8.4,1X),F9.6,1PD11.3,
     +0PF9.2,2X,F9.2,4H TO ,F9.2,I5,4H PTS/1H )
      KPAGE = KPAGE+3
      GO TO 2300
2200  WRITE(1,2201) AL9
2201  FORMAT(/14H DEFAULT L/D =,F10.4/27H ENTER DESIRED L/D OR 0 TO ,
     +14HACCEPT DEFAULT)
      READ(1,*) AL8
```

```
      IF(AL8.EQ.0) GO TO 2202
      WFAC=SHORT(AL9,AL8,ALF)
      GO TO 2203
2202  WFAC=1.0
      AL8 = AL9
2203  WRITE(1,2204)
2204  FORMAT(27HENTER LOWEST LOAD PARAMETER)
      READ(1,*) W1
      WW1=W1*WFAC
      WRITE(1,2205)
2205  FORMAT(28HENTER HIGHEST LOAD PARAMETER)
      READ(1,*) W2
      WW2=W2*WFAC
      WRITE(1,2206)
2206  FORMAT(46HENTER NUMBER OF DATA POINTS (NOT MORE THAN 51))
      READ(1,*) NTAB
      IF(NTAB.GT.1) GO TO 2207
      SPRAT = 1.0
      GO TO 2208
2207  XP = 1.0/(NTAB-1)
      SPRAT=(WW2/WW1)**XP
2208  WW=WW1
      NBA = 1
      NVEC = 1
2300  DO 2330 ITAB=1,NTAB
      IF(NSEL.EQ.3) GO TO 2310
      WW=BLOA/RPM
2310  XX(ITAB)=DATAN(WW)/P2
      WO(ITAB)=WW
      IF(NSEL.EQ.3) GO TO 2320
      XO(ITAB)=RPM
      IF (ITAB.EQ.NTAB) GO TO 2330
      RPM=RPM*SPRAT
      GO TO 2330
2320  XO(ITAB)=WW/WFAC
      IF (ITAB.EQ.NTAB) GO TO 2330
      WW=WW*SPRAT
2330  CONTINUE
C
C     RETRIEVAL LOOP
C
      WRITE(KW,2331)
2331  FORMAT(////)
      KPAGE=KPAGE+4
      IF(AL8.EQ.AL9) GO TO 2340
      WRITE(KW,2333) AL8
2333  FORMAT(37H LOAD PARAMETER IS ADJUSTED FOR L/D =,F10.4/1H )
      KPAGE=KPAGE+2
2340  IF(NSEL.EQ.3) GO TO 2350
      WRITE(KW,2341)
2341  FORMAT(5X,3HRPM,10X,7HECC(IN),5X,9HATT ANGLE,3X,9HFRICT HP,
     +4X,10HQ-REQ(GPM),3X,11HQ-LOST(GPM))
      GO TO 2360
2350  WRITE(KW,2351)
```

```
2351  FORMAT(5X,4HLOAD,8X,42HECC RATIO    ATT ANGLE    FRICTION     REQ.
     +19H FLOW     LOST FLOW)
2360  KPAGE=KPAGE+1
C
C     STATIC PARAMETERS
C
      DO 2380 L1=1,5
      READ(K",2371) S1,S2,AA,BB,((Z2(I),(Y1(K,I),K=1,2),I=1,NM),L1=1,NN)
2371  FORMAT(7D11.4)
C
C      ARCTAN LOOP
C
      DO 2376 ITAB=1,NTAB
      XXX=XX(ITAB)
      N1=NWHERE(XXX,X,NM)
      NPLACE(ITAB)=N1
      DX=XXX-X(N1)
      Z=SPL(ZZ,Y1,DX,N1)
      WW=WO(ITAB)
      Z1=PEPER(AA,BB,S1,S2,WW)
      Y=Z+Z1
      IF(NSEL EQ.3) GO TO 2375
      RPM=XO(ITAB)
      GO TO (2372,2375,2373,2374,2374),L1
2372  YY=YY*ACLE
      GO TO 2375
2373  YY=YY*BHP*RPM*RPM
      GO TO 2375
2374  YY=YY*BGPM*RPM
2375  YO(L1,ITAB)=YY
2376  CONTINUE
2380  CONTINUE
      DO 2400 ITAB=1,NTAB
      WRITE(KW,2381) XO(ITAB),(YO(L1,ITAB),L1=1,5)
2381  FORMAT(6(1X,1PD12.4))
      KPAGE=KPAGE+1
      IF(KPAGE.LT.61.OR.ITAB EQ.NTAB) GO TO 2400
      KPAGE=1
      WRITE(KW,2382)
2382  FORMAT(1H1)
      IF(NSEL.EQ.3) GO TO 2390
      WRITE(KW,2341)
      GO TO 2400
2390  WRITE(KW,2351)
2400  CONTINUE
C
C     DYNAMIC PARAMETERS
C
      IF(AL8.EQ.AL9) GO TO 2420
      WRITE(KW,2412) AL8
2412  FORMAT(////48H LOAD AND DYNAMIC COEFFICIENTS ARE ADJUSTED FOR ,
     +5HL/D =,F8.4,1H )
      KPAGE = KPAGE+6
      IF (KPAGE.GT.60) KPAGE = KPAGE-60
```

```
      GO TO 2415
2420  WRITE(KW,2331)
      KPAGE = KPAGE+4
      IF (KPAGE.GT.60) KPAGE = KPAGE-60
2415  IF (NSYN.EQ.2) GO TO 2445
      IF (NSEL.EQ.3) GO TO 2430
      WRITE(KW,2421)
2421  FORMAT(3X,3HRPM,7X,4HK-XX,6X,4HB-XX,6X,4HK-XY,6X,4HB-XY,6X,4HK-YX,
     +6X,4HB-YX,6X,4HK-YY,6X,4HB-YY)
      GO TO 2440
2430  WRITE(KW,2431)
2431  FORMAT(2X,4HLOAD,7X,4HK-XX,6X,4HB-XX,6X,4HK-XY,6X,4HB-XY,6X,
     +4HK-YX,6X,4HB-YX,6X,4HK-YY,6X,4HB-YY)
2440  KPAGE = KPAGE+1
2445  DO 2480 L1=6,13
      L=L1-5
      L2=L/2
      LL=2*L2
      READ(KT,2371) S1,S2,AA,BB,((ZZ(I,J),J=1,7),I=1,NN), ZZ(NN)
C
C     ARCTAN LOOP
C
      DO 2480 ITAB=1,NTAB
      XXX=XX(ITAB)
      N1=NPLACE(ITAB)
      DX=XXX-X(N1)
      Z=SPL(ZZ,Y1,DX,N1)
      WW=WO(ITAB)
      Z1=REFER(AA,BB,S1,S2,WW)
      YY=Z*Z1
      IF(NSEL.EQ.3) GO TO 2460
      IF(LL.EQ.L) GO TO 2450
      YY=YY*BSTIF*XO(ITAB)
      GO TO 2470
2450  YY=YY*BDAMP
      GO TO 2470
2460  YY=YY/WFAC
2470  YO(L,ITAB)=YY
      IF(L.NE.6) GO TO 2480
      YY=(YY+YO(4,ITAB))/2.0
      YO(L,ITAB)=YY
      YO(4,ITAB)=YY
2480  CONTINUE
      DO 2490 ITAB=1,NTAB
      IF (NSYN.EQ.1) INDX = ITAB
      DO 3000 L=1,6
      Y(L,ITAB) = YO(L,ITAB)
3000  CONTINUE
      IF (NVEC.EQ.2) CALL TILT(Y,ROT,ITAB)
      DO 6030 KFF=1,LFREQ
      IF (NSYN.EQ.2) GO TO 5010
      NFRE = I
      IF (NSEL.EQ.3) GO TO 5000
      FF = XO(ITAB)
```

```
      GO TO 5060
5000  FF = 1.0
      GO TO 5060
 5010 IF(NSEL.EQ.3) GO TO 4010
      WRITE(KW,4001) XO(ITAB)
 4001 FORMAT(1H1,6H RPM = ,1PD10.3)
      GO TO 4020
 4010 WRITE(KW,4002) XO(ITAB)
 4002 FORMAT(1H1,7H LOAD =,1PD10.3)
4020  WRITE(KW,5011)
5011  FORMAT(2X,4HFREQ,7X,4HK-XX,6X,4HB-XX,6X,4HK-XY,6X,4HB-XY,6X,
     +4HK-YX,6X,4HB-YX,6X,4HK-YY,6X,4HB-YY)
      KPAGE=1
      IF (NSEL.EQ.3) GO TO 5015
      WRITE(1,5012) KFF,XO(ITAB)
5012  FORMAT(5X,35HENTER FREQ DATA (HZ) FOR FREQ GROUP,I5,3H AT,1PD12.4,
     +4H RPM/10X,12HLOWEST FREQ?)
      GO TO 5020
5015  WRITE(1,5016) KFF,XO(ITAB)
5016  FORMAT(5X,30HENTER FREQ DATA FOR FREQ GROUP,I5,9H AT LOAD
     +11HPARAMETER =,1PD12.4/10X,18HLOWEST FREQ RATIO?)
5020  READ (1,*) FREQ1
      IF (NSEL.EQ.3) GO TO 5021
      FF = 6.00+01*FREQ1
      GO TO 5022
5021  FF = FREQ1
5022  IF (NSEL.NE.3) WRITE(1,5023)
5023  FORMAT(10X,13HHIGHEST FREQ?)
      IF (NSEL.EQ.3) WRITE(1,50230)
50230 FORMAT(10X,19HHIGHEST FREQ RATIO?)
      READ (1,*) FREQ2
      WRITE(1,5024)
5024  FORMAT(10X,22HNUMBER OF FREQ POINTS?)
      READ (1,*) NFRE
      IF (NSEL.EQ.3) GO TO 5040
      IF (NFRE.LE.1) GO TO 5030
      XP = 1.0/(NFRE-1)
      FFRAT = (FREQ2/FREQ1)**XP
      GO TO 5060
5030  FFRAT = 1.0
      GO TO 5060
5040  IF (NFRE.LE.1) GO TO 5050
      DFFE = (FREQ2-FREQ1)/(NFRE-1)
      GO TO 5060
5050  DFFE = 0.0
5060  DO 5200 IFRE=1,NFRE
      IF (NSYN.EQ.2) INDX = IFRE
      FRQ(INDX) = FF
      DO 5070 L=1,8
      ZEP(L,INDX) = Y(L,ITAB)
5070  CONTINUE
      IF (NBA.EQ.1 AND NSYN.EQ.2 AND IFFE.GT.1) GO TO 5103
      IF (NBA.EQ.1) GO TO 5080
      CALL GOAT(FF,ZEP,INDX,BHA,BST,BDA)
```

```
5080  IF (NSEL EQ 3) GO TO 5085
      IF (NSYN EQ.1) GO TO 5090
      GG = FF/6.0D+01
      GO TO 5100
5085  IF (NSYN EQ 2) GO TO 5090
      GG = XO(ITAB)
      GO TO 5100
5090  GG = FF
5100  WRITE(KW 5101) GG,(ZEP(I,INDX) [illegible]
      KPAGE=KPAGE+1
5101  FORMAT(1P8D10.3)
      IF (NSEL EQ 1) WRITE(KW 5102) (ZEP(I,INDX) [illegible]
5102  FORMAT(1P8D10.3)
5103  IF (NBA.NE 1 OR NSYN NE 2) GO TO 5104
      IF (IFRE EQ.NFRE) GO TO 5105
      GO TO 5105
5104  IF (IFRE.EQ NFRE) GO TO 5150
5105  IF (NSEL.EQ 3) GO TO 5110
      FF = FF*FFRAT
      GO TO 5150
5110  FF = FF+DFRE
5150  IF (NSYN EQ 2 AND IFRE EQ NFRE) GO TO [illegible]
      IF (KPAGE LT.61) GO TO 5200
      WRITE(KW,2382)
      IF(NSYN EQ 1) GO TO 5152
5151  WRITE(KW 5011)
      GO TO 5190
5152  IF(NSEL EQ.3) GO TO 5153
      WRITE(KW,2421)
      GO TO 5190
5153  WRITE(KW,2431)
5190  KPAGE = 1
5200  CONTINUE
      IF (NSYN EQ.1) GO TO 6030
      IF (KPAGE.LT.57) GO TO 2491
      WRITE(KW,2382)
      KPAGE = 0
      GO TO 2492
2491  WRITE(KW,2331)
      KPAGE = KPAGE+4
2492  IF (NSEL EQ.3) GO TO 2493
      FF = 6.0D+01*FREQ1
      GO TO 2494
2493  FF = FREQ1
2494  WRITE(KW,6001)
6001  FORMAT(37H ASYNCHRONOUS BEARING CHARACTERISTICS/12X,14(1H*),
     +10HMINOR MODE,14(1H*),2X,14(1H*),10HMAJOR MODE,14(1H*)/
     +61H  FREQUENCY STIFFNESS  CR DAMP  ELLIPTIC   ORIENT   STIFFNESS,
     +28H  CR DAMP  ELLIPTIC   ORIENT)
      KPAGE = KPAGE+3
6010  DO 6020 IFRE=1,NFRE
      FF = FRQ(IFRE)
      CALL STAB(ZEP,FF,NSEL,NSYN IFRE,KW,KPAGE)
6020  CONTINUE
```

```
      IF (KPAGE.GE.57) GO TO 6025
      WRITE(KW,2331)
      KPAGE = KPAGE+4
      GO TO 6030
6025  WRITE(KW,2382)
      KPAGE = 0
6030  CONTINUE
      IF (NSYN.EQ 1) GO TO 2490
      IF (KPAGE LT.61 OR.ITAB. EQ.NTAB) GO TO 2490
      WRITE (KW,2382)
      IF (NSEL EQ.3) GO TO 6031
      WRITE (KW,2421)
      GO TO 6032
6031  WRITE(KW,2431)
6032  KPAGE = KPAGE+1
2490  CONTINUE
      IF (NSYN.EQ.2) GO TO 7000
      IF (KPAGE LT.57) GO TO 6035
      WRITE (KW,2382)
      KPAGE = 0
      GO TO 6040
6035  WRITE (KW,2331)
      KPAGE = KPAGE+4
6040  WRITE(KW,2495)
2495  FORMAT(1X,15(1H*),25HSYNCH BRG CHARACTERISTICS,15(1H*),2X,
     +21HSTABILITY  PARAMETERS)
      IF (NSEL EQ.3) GO TO 2497
      WRITE(KW,2496)
2496  FORMAT(55H   RPM       MIN  STIFF  MIN DAMP   MAJ  STIFF  MAJ DAMP,
     +22H   CR MASS     F RATIO)
      GO TO 2499
2497  WRITE(KW,2498)
2498  FORMAT(55H   LOAD      MIN  STIFF  MIN DAMP   MAJ  STIFF  MAJ DAMP
     +22H   CR MASS     F RATIO)
2499  KPAGE = KPAGE+2
      DO 2500 ITAB=1,NTAB
      FF = XO(ITAB)
      CALL STAB(ZEP,FF,NSEL,NSYN,ITAB,KW,KPAGE)
2500  CONTINUE
7000  IF(NSEL.NE.1) GO TO 2510
      WRITE(1,2501)
2501  FORMAT(/33H SELECT - (1) ANOTHER SPEED GROUP/10X,8A(2) QUIT)
      READ(1,*) NCASE
      IF(NCASE.EQ.2) GO TO 2510
      ANS=RWND$A(KW3)
      READ(KT,1002)(FN2(I),I=1,16),NN,AL9,ALF
      READ(KT,1003) (X(I),I=1,NN)
      WRITE(KW,2382)
      KPAGE = 0
      GO TO 2110
2510  ANS=CLOS$A(KW1)
      IF(ANS) GO TO 2520
      WRITE(1,2511) KW1
2511  FORMAT('ERROR IN CLOSING FILE ON UNIT',I5)
```

```
2320  ANS=CLOS$A(KW2)
      IF(ANS) GO TO 2530
      WRITE(1,2511) KW2
2530  ANS=CLOS$A(KW3)
      IF(ANS) GO TO 2540
      WRITE(1,2511) KW3
2540  CALL EXIT
      END
```

```
C
C
C
      SUBROUTINE STAB(YO,RP,NS,NY,IT,KW,KPAGE)
C
C     CALCULATION OF
C     SYNS1,SYNS2              MINOR AND MAJOR STIFFNESS COEFFICIENTS
C     SYNB1,SYNB2              MINOR AND MAJOR CRITICAL DAMPING FACTORS
C
C          CRMA                     CRITICAL MASS FOR INSTABILITY
C          FRAT                     FREQUENCY RATIO OF INSTABILITY
C          FOR SYNCHRONOUS DATA (NY.EQ.1)
C
C          EE(K)                    MINOR/MAJOR RADIUS RATIO
C          OO(K)                    ORIENTATION ANGLE OF MAJOR AXIS
C          FOR ASYNCHRONOUS DATA (NY.EQ.2)
C
      IMPLICIT REAL*8 (A-H,O-Z)
      DIMENSION YO(8,1),Y(8),EE(2),OO(2)
      PI = DATAN(1.0D-00)*4.0
      IF (NS.EQ.3) GO TO 1000
      FF = PI/3.0D+01*RP
      GO TO 1
1000  IF (NY.EQ.1) GO TO 1010
      FF = RP
      GO TO 1
1010  FF = 1.0
1     DO 10 I=2,8,2
      J=I-1
      Y(J) = YO(J,IT)
10    Y(I) = FF*YO(I,IT)
      Y34 = Y(3)**2+Y(4)**2
      IF (Y34) 20,40,20
20    Y56 = Y(5)**2+Y(6)**2
      IF (Y56) 30,40,30
C
C     COEFFICIENTS FOR PRINCIPAL MODE ANALYSIS
C
30    SKPA = Y(1)+Y(7)
      SBPA = Y(2)+Y(8)
      DKPA = Y(1)-Y(7)
      DBPA = Y(2)-Y(8)
      XKB = Y(3)*Y(6)+Y(4)*Y(5)
      XKK = Y(3)*Y(5)
      XBB = Y(4)*Y(6)
      DKK=DKPA*DKPA+4.0*XKK
      DKB=2.0*DKPA*DBPA+4.0*XKB
      DBB=DBPA*DBPA+4.0*XBB
      CALL PRINCE(DKK,DKB,DBB,ZK,ZB)
      SYNS1=(SKPA-ZK)/2.0
      SYNS2=SYNS1+ZK.
      SYNB1=(SBPA-ZB)/2.0
      SYNB2=SYNB1+ZB
      SYNB1=SYNB1/DABS(SYNS1)/2.0
```

```
      SYNB2=SYNB2/DABS(SYNS2)/2.0
      IF (NY.EQ.2) GO TO 100
      CRMA = (Y(1)*Y(8)+Y(7)*Y(2)-XKB)/SBPA
      IF (CRMA.LE.0.0) GO TO 60
      F2 = ((Y(1)-CRMA)*(Y(7)-CRMA)-XKK)/(Y(2)*Y(8)-XBB)
      IF (F2.LT.0.0) GO TO 60
      CRMA = CRMA/F2/386.4
      FRAT = DSQRT(F2)
      GO TO 50
40    SYNS1 = Y(7)
      SYNB1 = Y(8)
      SYNS2 = Y(1)
      SYNB2 = Y(2)
      IF (NY.EQ.2) GO TO 200
60    WRITE(KW,6001) RP,SYNS1,SYNB1,SYNS2,SYNB2
      GO TO 55
50    WRITE(KW,5002) RP,SYNS1,SYNB1,SYNS2,SYNB2,CRMA,FRAT
5002  FORMAT(1PD11.4,2(2D11.4,1X),2D11.4)
5010  KPAGE=KPAGE+1
      IF(KPAGE.LT.61) GO TO 70
      WRITE(KW,5050)
55    KPAGE=1
5050  FORMAT(1H1)
6001  FORMAT(1PD11.4,2(2D11.4,1X),23H UNCONDITIONALLY STABLE)
70    RETURN
C     ASNYCHRONOUS MODAL DATA PRINTOUT OF THE ANISOTROPIC CASE
100   K = 1
      KK = 1
      GX1 = (DKPA+ZK)/2.0
      GX2 = (DBPA+ZB)/2.0
      GY1 = Y(3)
      GY2 = Y(4)
105   U0 = DSQRT(GY1*GY1+GY2*GY2)
110   V0 = DSQRT(GX1*GX1+GX2*GX2)
      YY = GX1*U0+GY1*V0
      XX = GX2*U0-GY2*V0
      AA = DATAN2(YY,XX)
      CC = DCOS(AA)
      SS = DSIN(AA)
      X1 = U0*CC
      X2 = U0*SS
      Y1 = V0*CC
      Y2 =-V0*SS
      CALL WHIRL(U1,U2,V1,V2,X1,X2,Y1,Y2)
      CALL SHAPE(E,0,U1,U2,V1,V2)
      IF (E.GT.1.0) GO TO 150
      EE(K) = E
      OO(K) = 1.8E+02*(1.0+0/PI)
      IF (KK.EQ.2) GO TO 266
      IF (K.EQ.2) GO TO 130
      K = 2
      GX1 = GX1-ZK
      GX2 = GX2-ZB
      GO TO 110
```

```
130   IF (NS.NE.3) FF = RP/6.0D+01
      WRITE(KW,5100) FF,SYNS1,SYNB1,EE(1),OO(1),SYNS2,SYNB2,EE(2),OO(2)
5100  FORMAT(1X,1P9D10.3)
      GO TO 5010
150   WRITE(KW,5110)
5110  FORMAT(19H FAULTY MODAL SHAPE)
      CALL EXIT
C     ASYNCHRONOUS MODAL DATA PRINTOUT OF THE ISOTROPIC CASE
200   IF (Y34.NE.0.0.OR.Y56.NE.0.0) GO TO 250
      EE(1) = 0.0
      OO(1) = 9.0D+01
      EE(2) = 0.0
      OO(2) = 0.0
      GO TO 130
250   IF (Y(1).NE.Y(7).OR.Y(2).NE.Y(8)) GO TO 260
      EE(1) = 0.0
      OO(1) = 0.0
      IF (NS.NE.3) FF = RP/6.0D+01
      WRITE(KW,5200) FF,SYNS1,SYNB1,EE(1),OO(1)
5200  FORMAT(1X,1P4D10.3,16H DEGENERATE MODE)
      GO TO 5010
260   KK = 2
      IF (Y34.EQ.0.0) GO TO 270
      K = 1
      GX1 = Y(3)
      GX2 = Y(4)
      GY1 = Y(1)-Y(7)
      GY2 = Y(2)-Y(8)
      GO TO 105
266   IF (K.EQ.2) GO TO 130
      EE(2) = 0.0
      OO(2) = 0.0
      GO TO 130
270   EE(1) = 0.0
      OO(1) = 9.0D+01
      K = 2
      GX1 = Y(7)-Y(1)
      GX2 = Y(8)-Y(2)
      GY1 = Y(5)
      GY2 = Y(6)
      GO TO 105
      END
```

```
C
C
C
      SUBROUTINE PRINCE(DKK,DKB,DBB,ZK,ZB)
      IMPLICIT REAL*8 (A-H,O-Z)
      DRE = DKK-DBB
      DIM = DKB
      DAMP = DSQRT(DRE*DRE+DIM*DIM)
      GO TO 40
30    DAMP = DABS(DKK)
      DRE = DKK
      DIM = 0.0
40    DARG = DATAN2(DIM,DRE)
      AMP = DSQRT(DAMP)
      ARG = DARG/2.0
      ZK = AMP*DCOS(ARG)
      ZB = AMP*DSIN(ARG)
      RETURN
      END
```

```
C
C
C
      SUBROUTINE WHIRL(U1,U2,V1,V2,X1,X2,Y1,Y2)
      IMPLICIT REAL*8 (A-H,O-Z)
C     TRANSFORMS COMPLEX CARTESION REPRESENTATION (X1,X2),(Y1,Y2)
C           INTO COMPLEX ROTATING  REPRESENTATION (U1,U2),(V1,V2)
      U1 = (X1-Y2)/2.0
      U2 = (X2+Y1)/2.0
      V1 = U1+Y2
      V2 = U2-Y1
      RETURN
      END
```

```
C
C
C
      SUBROUTINE SHAPE(E,O,U1,U2,V1,V2)
      IMPLICIT REAL*8 (A-H,O-Z)
C     CALCULATES MINOR/MAJOR RADIUS RATIO AND ORIENTATION FROM COMPLEX
C           WHIRL COMPONENTS
      UU = U1*U1+U2*U2
      VV = V1*V1+V2*V2
      WW = UU+VV
      UW = UU/WW
      VW = VV/WW
      IF (UW.LT.1.0D-20) GO TO 10
      IF (VW.LT.1.0D-20) GO TO 20
      U = DSQRT(UU)
      V = DSQRT(VV)
      A1 = DATAN2(U2,U1)
      A2 = DATAN2(V2,V1)
      O = (A1-A2)/2.0
      UV = U+V
      E = (U-V)/UV
      GO TO 40
10    IF (VW.LT.1.0D-20) GO TO 30
      E =-1.0
15    O =-4.0*DATAN2(1.0D-00)
      GO TO 40
20    IF (UW.LT.1.0D-20) GO TO 30
      E = 1.0
      GO TO 15
30    E = 2.0
40    RETURN
      END
```

```
      FUNCTION SHORT(ALT,ALD,ALF)
      IMPLICIT REAL*8 (A-H,O-Z)
      A2=ALF*ALF/3.0
      KTIME=1
      X=ALF*ALT
10    XX=2.0*X
      YY=DEXP(-XX)
      T=(1.0-YY)/(1.0+YY)
      A=(1.0-T/X)/A2
      IF(KTIME EQ.2) GO TO 20
      A1=A
      KTIME=2
      X=ALF*ALD
      GO TO 10
20    SHORT=A1/A
      RETURN
      END
```

```
C
C
C
      FUNCTION NWHERE(XX,X,NM)
      IMPLICIT REAL*8 (A-H,O-Z)
      DIMENSION X(1)
      N1=0
      MM = NM
      DO 10 I=2,MM
      Y=XX-X(I)
      IF(Y.GT.0.0) GO TO 10
      N1=I-1
      MM=I
10    CONTINUE
      IF(N1.EQ.0) N1=MM
      NWHERE=N1
      RETURN
      END
```

```
C
C
C
      FUNCTION SPL(ZZ,Y1,DX,N)
      IMPLICIT REAL*8 (A-H,O-Z)
      DIMENSION ZZ(1),Y1(3,1)
      SPL=ZZ(N)+DX*(Y1(1,N)+DX*(Y1(2,N)+DX*Y1(3,N)/3.0)/2.0)
      RETURN
      END
```

```
C
C
C
      FUNCTION REFER (AA,BB,S1,S2,W)
C     CALCULATES REFERENCE FUNCTION
C
      IMPLICIT REAL*8 (A-H,O-Z)
      IF (S1.LT.0.0) GO TO 100
      W1=DABS(AA)
      W2=DABS(BB)
      IF(W.EQ.0.0) GO TO 30
      W1=W1*(W**S1)
      W2=W2*(W**S2)
      S3=S1-S2
      IF(S3.GT.0.0) GO TO 10
      IF(S3.GT.-1.0D-00) W2=W2*W
      REFER=W1+W2
      IF(S3.LE.-1.0D-00) GO TO 20
      REFER=REFER/(1.0D-00+W)
      GO TO 20
10    REFER = W1*W2*(1.0D-00+W)/(W*W1+W2)
20    RETURN
30    IF(S1.GT.0.0) GO TO 40
      REFER = W1
      GO TO 20
40    REFER = 0.0
      GO TO 20
100   WRITE(1,1001)
1001  FORMAT(/35H FAULTY DATA. NEAR FIELD EXPONENT =,1PD12.4)
      CALL EXIT
      END
```

```
C
C
C
      SUBROUTINE TILT(Y,ROT,IT)
C     ROTATIONAL TRANSFROMATION OF IMPEDANCE MATRIX
      IMPLICIT REAL*8 (A-H,O-Z)
      DIMENSION ROT(1),Y(8,1)
      YK11 = Y(1,IT)
      YB11 = Y(2,IT)
      YK22 = Y(7,IT)
      YB22 = Y(8,IT)
      YK12 = Y(3,IT)
      YB12 = Y(4,IT)
      YK21 = Y(5,IT)
      YB21 = Y(6,IT)
      DKPA = YK11-YK22
      DBPA = YB11-YB22
      SKXX = YK12+YK21
      SBXX = YB12+YB21
      Y(1,IT) = YK11*ROT(1)-SKXX*ROT(2)+YK22*ROT(3)
      Y(2,IT) = YB11*ROT(1)-SBXX*ROT(2)+YB22*ROT(3)
      Y(3,IT) = DKPA*ROT(2)+YK12*ROT(1)-YK21*ROT(3)
      Y(4,IT) = DBPA*ROT(2)+YB12*ROT(1)-YB21*ROT(3)
      Y(5,IT) = Y(3,IT)-YK12+YK21
      Y(6,IT) = Y(4,IT)-YB12+YB21
      Y(7,IT) =-Y(1,IT)+YK11+YK22
      Y(8,IT) =-Y(2,IT)+YB11+YB22
      RETURN
      END
```

```
C
C
C
      SUBROUTINE BASE(NBA,BMA,BST,BDA)
C     PEDESTAL PROPERTIES
      IMPLICIT REAL*8 (A-H,O-Z)
      DIMENSION BMA(1),BST(1),BDA(1),BIN(2),R2(2)
      WRITE(1,1001)
1001  FORMAT(/29HSELECT:  (1) RIGID FOUNDATION/9X,13H(2) ISOTROPIC,
     +26H FOUNDATION COMPLIANCE, OR/9X,27H(3) ANISOTROPIC FOUNDATION ,
     +11HCOMPLIANCE?)
      READ (1,*) NBA
      IF (NBA.EQ.1) GO TO 1220
      WRITE(1,1002)
1002  FORMAT(/31HSELECT:  (1) RADIAL BEARING, OR/9X,12H(2) ANGULAR ,
     +8HBEARING?)
      READ (1,*) NTY
      WRITE(1,1003)
1003  FORMAT(5X,27HENTER PEDESTAL WEIGHT (LB)?)
      READ (1,*) BWT
      IF (NTY.EQ.2) GO TO 105
      BMA(1) = BWT/386.4
      BMA(2) = BMA(1)
      GO TO 120
105   WRITE(1,1004)
1004  FORMAT(5X,32HENTER CG OFFSET OF PEDESTAL (IN)/5X,6HAXIAL?,4X,
     +21HVERTICAL? HORIZONTAL?)
      READ (1,*) OZ,OX,OY
      RRX = OZ*OZ
      RRY = OZ*OZ
      IF (NBA.EQ.2) GO TO 106
      RRX = RRX+OX*OX
      RRY = RRY+OY*OY
106   R2(1) = RRX*BWT
      R2(2) = RRY*BWT
      WRITE(1,1005)
1005  FORMAT(5X,49HENTER MOMENT OF INERTIA IN VERT PLANE (LB-SQ IN)?)
      READ (1,*) BIN(1)
      IF (NBA.EQ.3) GO TO 1006
      BIN(2) = BIN(1)
      GO TO 1010
1006  WRITE(1,1007)
1007  FORMAT(5X,50HENTER MOMENT OF INERTIA IN HORIZ PLANE (LB-SQ IN)?)
      READ (1,*) BIN(2)
1010  DO 110 I=1,2
      BMA(I) = (BIN(I)+R2(I))/386.4
110   CONTINUE
120   WRITE(1,1201)
1201  FORMAT(5X,43HENTER PEDESTAL STIFFNESS IN VERTICAL PLANE?)
      WRITE(1,1202)
1202  FORMAT(5X,50H(LB/IN) FOR RADIAL BRG, OR (IN-LB/RAD) FOR ANG BRG)
      READ (1,*) BST(1)
      IF (NBA.EQ.3) GO TO 1203
      BST(2) = BST(1)
```

```
      GO TO 1210
1203  WRITE(1,1204)
1204  FORMAT(5X,45HENTER PEDESTAL STIFFNESS IN HORIZONTAL PLANE?)
      WRITE(1,1202)
      READ (1,*) BST(2)
1210  WRITE(1,1211)
1211  FORMAT(5X,41HENTER PEDESTAL DAMPING IN VERTICAL PLANE?)
      WRITE(1,1212)
1212  FORMAT(5X,52H(LB-SEC/IN) FOR RAD BRG, OR (IN-LB-SEC/RAD) FOR ANG ,
     +3HBRG)
      READ (1,*) BDA(1)
      IF (NBA.EQ.3) GO TO 1213
      BDA(2) = BDA(1)
      GO TO 1220
1213  WRITE(1,1214)
1214  FORMAT(5X,43HENTER PEDESTAL DAMPING IN HORIZONTAL PLANE?)
      WRITE(1,1212)
      READ (1,*) BDA(2)
1220  RETURN
      END
```

```
C
C
C
      SUBROUTINE GOAT(FF,Y,IFRE,BM,BS,BD)
C     SUMMATION OF BEARING AND PEDETAL COMPLIANCES
      IMPLICIT REAL*8 (A-H,O-Z)
      DIMENSION Y(8,1),BM(1),BS(1),BD(1)
      DIMENSION AB(2,2),BB(2,2),BZ1(2),BZ2(2),DZ1(2),DZ2(2)
      DIMENSION CB(2,2),DB(2,2),EB(2,2),FB(2,2)
C     ASSEMBLE BEARING IMPEDANCE
C
      RP = FF*DATAN(1.0D-00)/7.5D-00
      K = 0
      DO 10 I=1,2
      DO 10 J=1,2
      K = K+1
      KK = 2*K
      K1 = KK-1
      CB(I,J) = Y(K1,IFRE)
      DB(I,J) = Y(KK,IFRE)*RP
10    CONTINUE
C     CALCULATE PEDESTAL IMPEDANCE ELEMENTS
C
      RP2 = RP*RP
      DO 20 I=1,2
      BZ1(I) = BS(I)-BM(I)*RP2
      BZ2(I) = BD(I)*RP
20    CONTINUE
C     COMBINE PEDESTAL AND BRG IMPEDANCES
C
      DO 30 I=1,2
      DO 30 J=1,2
      IF (I.EQ.J) GO TO 25
      AB(I,J) = CB(I,J)
      BB(I,J) = DB(I,J)
      GO TO 30
25    AB(I,J) = CB(I,J)+BZ1(I)
      BB(I,J) = DB(I,J)+BZ2(I)
30    CONTINUE
C     INVERT
C
      DD1 = AB(1,1)*AB(2,2)-BB(1,1)*BB(2,2)
     +     -AB(1,2)*AB(2,1)+BB(1,2)*BB(2,1)
      DD2 = AB(1,1)*BB(2,2)+BB(1,1)*AB(2,2)
     +     -AB(1,2)*BB(2,1)-BB(1,2)*AB(2,1)
      DD = DD1*DD1+DD2*DD2
      DD1 = DD1/DD
      DD2 =-DD2/DD
      DO 40 I=1,2
      K = 3-I
      EB(I,I) = DD1*AB(K,K)-DD2*BB(K,K)
      FB(I,I) = DD1*BB(K,K)+DD2*AB(K,K)
      EB(I,K) =-DD1*AB(I,K)+DD2*BB(I,K)
      FB(I,K) =-DD1*BB(I,K)-DD2*AB(I,K)
```

```
40      CONTINUE
C       POST MULTIPLY BY BRG IMPEDANCE
C
        DO 50 I=1,2
        DO 50 J=1,2
        AB(I,J) = 0.0
        BB(I,J) = 0.0
        DO 50 K=1,2
        AB(I,J) = AB(I,J)+EB(I,K)*CB(K,J)-FB(I,K)*DB(K,J)
        BB(I,J) = BB(I,J)+EB(I,K)*DB(K,J)+FB(I,K)*CB(K,J)
50      CONTINUE
C       PRE MULTIPLY BY PEDESTAL IMPEDANCE AND RESTORE Y
        K = 0
        DO 60 I=1,2
        DO 60 J=1,2
        K = K+1
        KK = 2*K
        K1 = KK-1
        Y(K1,IFRE) = BZ1(I)*AB(I,J)-BZ2(I)*BB(I,J)
        Y(KK,IFRE) = (BZ1(I)*BB(I,J)+BZ2(I)*AB(I,J))/RP
60      CONTINUE
        RETURN
        END
```

REFERENCES

1. Lund, J. W., et al., "Rotor-Bearing Dynamics Design Technology, Part III, Design Handbook for Fluid Film Type Bearings," AFAPL-TR-65-45, May 1965, Wright-Patterson Air Force Base, OH 45433.

2. Pan, C.H.T., "Rotor Dynamics," Structural Mechanics Software Series, Vol. III, edited by N. Perrone and W. D. Pilkey, Chapter 4, University Press of Virginia, 1979.

3. Allaire, P.E., Nicholas, J. C., Gunter, E. J., Pan, C. H. T., "Rotor-Bearing Dynamics Technology Design Guide: Part V, Dynamic Analysis of Incompressible Fluid Film Bearings," AFAPL-TR-78-6, Part V, March 1980, Air Force Aero Propulsion Laboratory, Wright-Patterson Air Force Base, Ohio.

4. Pan, C. H. T., "Rotor-Bearing Dynamics Technology Design Guide, Part VI, Status of Gas Bearing Technology Applicable to Aero Propulsion Machinery," AFAPL-TR-78-7, Part VI, to be published, Air Force Aero Propulsion Laboratory, Wright-Patterson, Air Force Base, Ohio.

5. Lund, J.W. and Thomsen, K. K., "A Calculation Method and Data for the Dynamic Coefficients of Oil Lubricated Journal Bearings, Topics in Fluid Film Bearing and Rotor Bearing System Design and Optimization, Ed. by S. M. Rohde, P.E. Allaire, and E. J. Maday, ASME Trans., pp 1-28.

6. Swift, H. W., "The Stability of Lubricating Films in Journal Bearings," Proceedings Institute of Civil Engineers (London), Vol. 233, 1932, pp 267-288.

7. Stieber, W., "Das Schwimmlager," VD I, Berlin, 1933.

8. Gumbel, L. and Everling, E., "Monatsblä Berliner Bezirksver," VD I, Vol. 5, 1914, pp 87-104.

9. Pan, C. H.T., Krauter, A.I., and Wu, E.R., "Rotor Bearing Dynamics Technology Design Guide, Part I, Flexible Rotor Dynamics," AFAPL-TR-78-6, Part I, June 1980, Air Force Aero Propulsion Laboratory, Wright Patterson Air Force Base, Ohio.

10. Dubois, G.B. and Ocvirk, F. W., "Analytical Derivation and Evaluation of Short Bearing Approximation for Full Journal Bearings," Nat. Advis. Comm. Aeronaut. Report 1157, 1953.

11. Sommerfeld, A., "Zur hydrodynamischen Theorie der Schmiermittehreibung," Z. Math. Phys., 50, 1904, pp 97-155.

12. Lund, J.W., "Self-Excited, Ataionary Whirl Orbits of a Journal in a Sleeve Bearing," Ph.D. Thesis, Rensselaer Polytechnic Institute, Troy, N.Y., April 1966.

*U.S.Government Printing Office: 1980 — 757-002/264