AD-A104 628 NAVAL POSTGRADUATE SCHOOL MONTEREY CA F/G 5/3
TOWARDS A THEORETICAL BASIS FOR ENERGY ECONOMICS.(U)
AUG 80 R W GRUBBSTROM
UNCLASSIFIED NPS-54-80-015 NL

1 OF 4
AD
A104628

NPS 54-80-015

NAVAL POSTGRADUATE SCHOOL

Monterey, California

TOWARDS A THEORETICAL BASIS FOR ENERGY ECONOMICS

Robert W. Grubbstrom

August 1980

Approved for public release; distribution unlimited

Prepared for:

Naval Postgraduate School
Monterey, California 93940

NAVAL POSTGRADUATE SCHOOL
Monterey, California

Rear Admiral J. J. Ekelund
Superintendent

D. A. Schrady
Acting Provost

This report was prepared by:

Robert W. Grubbstrom
Visiting Professor 1978/79
Department of Administrative Sciences
On leave from Linkoping Institute of
Technology, Linkoping, Sweden, during
Academic Year 1978/79

The work reported herein was financed by a grant from the National Swedish Board for Technical Development.

Reviewed by:

Carl R. Jones, Chairman
Department of Administrative Sciences

Released by:

William M. Tolles
Dean of Research

SECURITY CLASSIFICATION OF THIS PAGE (When Data Entered)

REPORT DOCUMENTATION PAGE

READ INSTRUCTIONS BEFORE COMPLETING FORM

1. REPORT NUMBER: NPS54-80-015

2. GOVT ACCESSION NO.: AD-A104 628

3. RECIPIENT'S CATALOG NUMBER:

4. TITLE (and Subtitle): TOWARDS A THEORETICAL BASIS FOR ENERGY ECONOMICS,

5. TYPE OF REPORT & PERIOD COVERED: Technical

6. PERFORMING ORG. REPORT NUMBER: NPS-54-80-015

7. AUTHOR(s): Robert W. Grubbström

8. CONTRACT OR GRANT NUMBER(s):

9. PERFORMING ORGANIZATION NAME AND ADDRESS: Naval Postgraduate School, Monterey, CA 93940

10. PROGRAM ELEMENT, PROJECT, TASK AREA & WORK UNIT NUMBERS:

11. CONTROLLING OFFICE NAME AND ADDRESS: Naval Postgraduate School, Monterey, CA 93940

12. REPORT DATE: August 1980

13. NUMBER OF PAGES: 270

14. MONITORING AGENCY NAME & ADDRESS (if different from Controlling Office):

15. SECURITY CLASS. (of this report): Unclassified

15a. DECLASSIFICATION/DOWNGRADING SCHEDULE:

16. DISTRIBUTION STATEMENT (of this Report): Approved for public release; distribution unlimited.

17. DISTRIBUTION STATEMENT (of the abstract entered in Block 20, if different from Report):

18. SUPPLEMENTARY NOTES:

19. KEY WORDS (Continue on reverse side if necessary and identify by block number):
Exergy
Energy economics
Second law of thermodynamics
Energy price
Available energy

20. ABSTRACT (Continue on reverse side if necessary and identify by block number):
Energy as such is no scarce resource since energy is indestructable. Therefore there is no real consumption nor any real production of energy but instead processes converting energy from one quality into another quality. In this report are formulated a number of models for studying energy as a scarce resource from the point of view of the second law of thermodynamics and for attaching an economic value (a price) to energy in different qualities. It is shown that exergy (potential amount of work extractable from a system of sources) acts both as a physical and as an economic norm.

DD FORM 1 JAN 73 1473 EDITION OF 1 NOV 65 IS OBSOLETE S/N 0102-014-6 01 1

UNCLASSIFIED

SECURITY CLASSIFICATION OF THIS PAGE (When Data Entered)

TOWARDS A THEORETICAL BASIS FOR ENERGY ECONOMICS

by

Robert W. Grubbström

August 1980

FOREWORD

This report provides an account of some basic results from the first stage in the project "Economic Pricing Principles for Energy in Different Forms" sponsored by the National Swedish Board for Technical Development (STU). The objective of this project is to formulate basic principles for the optimal pricing of energy in different forms based on an integration between thermodynamics and microeconomic theory. I am deeply grateful for the firm economic support which the Board, represented by Leif Andersson and Gunnar Kinbom, has offered me. The initiative to form this project emanated from early discussions with Leif Andersson and without the encouragement he has given, the project would never have been realized.

The main ideas presented in this report were developed during my appointment 1978-79 at the Naval Postgraduate School, Monterey, California. I wish to express my sincere gratitude to the Superintendent, Rear Admiral Taylor F Dedmán, and the Provost, Professor Jack R Borsting, for providing me with the opportunity to carry out this research and opening the facilities of the School to me, and to the Chairmen Professors Carl R Jones and Michael G Sovereign of the Departments of Administrative Sciences and Operations Research, to which I was affiliated, and to their secretarial staff. Special thanks are also due to Mr Roger M Martin of the Dudley Knox Library for his invaluable assistance in tracking down books and articles on the topics concerned.

A great number of people, too many to all be mentioned, have offered comments and suggestions for which I am extremely grateful, on the ideas presented. At the Naval Postgraduate School I would especially like to mention Professor Frank D Faulkner, Department of Mathematics, and Professors Paul J Marto and Paul F Pucci, Department of Mechanical Engineering, and particularly,

Professor Melvin B Kline, Department of Administartive Sciences, without whose many kindnesses to my family and to myself during our stay in Monterey my task would have been far more difficult. Professor George B Dantzig and members of the staff of the Energy Modelling Forum, Stanford University, offered many suggestions and gave me access to the Energy Information Center at Stanford, and Professor J Morley English, University of California, Los Angeles, offered me many ideas and provided several very useful references.

Many interesting discussions were held with, among others, Sashi Mozumder, University of California, Berkeley, Dr Kamal Golabi, Woodward-Clyde Consultants, San Francisco, Dr Meredith S Christ, University of Southern California, Paul H Randolph, Vice President, Energy Economics Division, Chase Manhattan Bank, New York, Professor Edward Erickson, North Carolina State University, Raleigh, and Dr C Marchetti, International Institute of Applied Systems Analysis, Laxenburg, Austria.

I am especially indebted to Professor Karl-Erik Eriksson, Department of Theoretical Physics, Chalmers University of Technology, Gothenburg, for his careful reading of and comments on parts of the manuscript, and for all the interest he has shown in the results, and to Professor Herman A O Wold, Uppsala, for checking through a preliminary Swedish version of parts of this report. At my home affiliation, Linköping Institute of Technology, several of my colleagues have given me suggestions, among whom I would like to mention Drs Folke Norstad and Bengt Winzell, Department of Mathematics, Dr Bengt Sandell, Department of Physics and Measurement Technology, and Professor Björn Karlsson, Department of Mechanical Engineering.

Several secretaries have been engaged in preparing the manuscript at different stages: Maud Eriksson, Annika Falk, Monica Johansson, Marie Johansson, Siv Gyllensten and Gitt Olsson,

who took care of the major part. Gösta Hesslow carried out the computing involved. Many thanks for all your hard work.

To all mentioned, and to my colleagues in the Department of Production Economics, I am deeply grateful.

A short preliminary version of this report in Swedish was written in November 1979 (Research Report 54, Department of Production Economics, Linköping Institute of Technology) and the contents were presented in seminars at the Naval Postgraduate School, Chalmers University of Technology and Linköping Institute of Technology, and at the TIMS/ORSA XV International Meeting, Honolulu. All comments I have received on these occasions have been of great help.

Källvik in August 1980

Robert W Grubbström

CONTENTS

CHAPTER 1. ENERGY AS A SCARCE RESOURCE

1.1. Economics and energy sources

Economics is the scientific body dealing with the allocation of scarce resources. Usually for such allocations a price system is employed by which alternative uses of resources are evaluated. In the *theory of consumption* households are to choose a best consumption plan. Such a plan might include an output of services as well as a plan for the volumes of various commodities to be purchased, when given all relevant prices. The *theory of production*, on the other hand, covers problems of producers as to their choice of plan over what products to manufacture, what services to provide or what factors to employ so as to maximize profits, when given the prices of all relevant inputs and outputs. The *theory of markets* integrates these two theories treating questions of at what prices commodity supplies will equal their demand, the equilibrium number of producers that will provide this supply, and related problems.

Energy economics would therefore be the area covering the pricing of, the supply of, the demand for and the allocation of energy as being a scarce resource used in consumption, or for running production processes, or to be employed in services, or for other purposes, all having the ultimate objective of providing a means for meeting and satisfying the needs and wants of consuming households and individuals constituting society. Energy as a quantity exchanged in the economic system is usually measured in British thermal units, kilowatt hours, or similar units and its price is measured in $'s per Btu or some similar measure.

However, in accordance with the laws of physics, energy as such is indestructable, at least if we take the relativistic identity of energy and matter into account. Thus, energy as such exists in abundance and cannot be a scarce resource. Energy as a scarce resource must therefore be considered in other terms than energy

content alone, and this must be a necessary requisite for defining *the concept of energy* as it would appear in energy economics. *This observation forms the first basic idea underlying this report.*

For energy to be a useful and therefore a valuable quantity to which a price may be attached, energy will have to be characterized in further dimensions than energy content alone. Apart from quantity there is a need for a uniform qualitative measure of energy. This has been pointed out in a number of circumstances. As an example let us choose a passage written by Odum [1973, p 224]:

> "Energy is measured by calories, Btu's, kilowatt hours, and other intraconvertible units, but energy has a scale of quality which is not indicated by these measures. The ability to do work for man depends on the energy quality and quantity, and this is measurable by the amount of energy of a lower quality grade required to develop the higher grade."

The obvious field to revert to for such considerations is thermodynamics, the branch of physics dealing with the transformation of energy between its different forms.

The two basic principles of thermodynamics are the *first* and *second laws*. The first is the *law of the conservation of energy (the energy principle)* and, according to what has been said, this principle cannot by itself account for the scarcity of useful energy. The second law, which constrains the direction in which any energy transformation may take place, on the other hand, provides an explanation for the limited capacity of energy in different forms and thereby offers a base for describing and measuring energy as a scarce resource. Whereas the first law deals with nothing but energy content, the second law provides the supplementary concept of *entropy* characterizing the deterioration to lower qualities. The *second law of thermodynamics (the entropy principle)* is therefore not only a central condition for analyzing

energy as a scarce resource. It appears indeed to be perfectly essential for attaching any meaning to the combination of the terms energy and scarcity.

Strongly related to tne second law is the concept of *exergy* to be analyzed in further detail in chapters 3 - 6. Exergy is energy in its highest qualitative form. Close approximations are electrical energy, potential or kinetic energy. The term exergy was coined by Rant in 1956 but a number of related concepts had been developed previously, such as *Gibbs' free energy* [Gibbs, 1906] and *availability* [Keenan, 1932, 1951]. Exergy is the maximum amount of mechanical work extractable from a system of energy sources.

As a second fundamental idea we shall introduce a *symmetry principle* for characterizing systems of energy sources. The maximum amount of work extractable from a set of sources must depend on various characteristics of the sources such as mass (molar contents), volume, temperature, pressure, chemical potentials etc. Sources, in this general context, will be used to cover sources as well as sinks.

Sources and sinks may be identified by identical sets of property variables. They are therefore similar in nature as to their rôle as part of an energy extraction system. The order in which such subsystems are enumerated must be perfectly irrelevant as to the potential amount of useful energy that might be available. Therefore it should be possible to account for useful energy, being a function of the characteristics of these subsystems, in the form of a symmetric function of these properties. This symmetry principle will be examined in further detail in section 1.3 below.

It might seem an irrelevant question as to investigating consequences of a symmetry principle. A couple of arguments may prove to justify our interest in this matter. As a first point let us note that "the environment" in thermodynamics acts as an infinite sink for e g heat flowing from a heat engine providing work. The

environment is an asymmetric subsystem in such descriptions since (i) the environment is assumed to have an infinite capacity for absorbing heat, and (ii) that there usually would be no cost associated with disposing the heat as such when disregarding the fact that cooling towers of power plants etc would give rise to capital and operation costs. A second point of argument concerns the frequently used efficiency measures, coefficients of performance and other similar entities. These measures relate some output flow of energy from a device considered to some input flow of energy. Such ratios are asymmetric with respect to the sources and sinks involved and their form usually rests on some implicit economic argument, viz that the output desired should be related to the input that has to be paid for. From a theoretical point of view, the choice of input is arbitrary and other symmetric measures have been suggested in literature and have also been used in practice (cf Berg [1974, p 41] and sections 3.2, 3.5). A third argument is that an infinite environment of real systems is at best no more than a good approximation and a final point that applying our symmetry principle might provide additional insights into the processes studied themselves.

In our analysis to follow, we depart from models in which all subsystems are finite and symmetrical in their properties and, when appropriate, we let one of these subsystems grow beyond all bounds creating an asymmetry. This special subsystem can then be interpreted as "the environment".

1.2. Aim, scope and limitations of study

The study reported here forms a first basic theoretical account within a project entitled "Economic pricing principles for energy in different forms", a project sponsored by the National Swedish Board for Technical Development. The underlying objective of this project is to develop principles for determining the economic value of energy as it appears in a variety of disguises in order to find

methods to be applied to practical problems when comparing alternative energy sources, alternative transformation equipment, the value of domestic insulation activities and similar questions.

As mentioned in section 1.1 there are two basic ideas underlying the developments to follow, the first being the observation that energy as such is indestructable and the second that useful energy should be viewed as a quantity symmetrically dependent on characteristics of the sources and sinks forming the system from which it is extracted. The symmetry principle will be illustrated in section 1.3.

The idea that energy (as such) cannot be a scarce resource due to the energy principle has previously been given attention in literature, but in such contexts little or no work appears to combine such a principle with the theoretical body of economics, i e to the main established theory dealing with the allocation of scarce resources. A few examples of ideas in literature coming close to ours will be given in section 1.5 below.

The following citations might illustrate how some authors have recently felt about the "principle of energy affluence" and the need for resolving this apparent paradox. Koefoed [1977, p 55] remarks at a NATO conference on thermal energy storage:

> "Energy, for one thing is a well defined concept, but the word is used abundantly to mean rather free energy, available energy or latent work; recently the word *exergy* has been proposed for this interpretation.
>
> Since energy is always conserved, we need not bother much about it here; the energy crisis is actually an exergy crisis ... ."

Thus Koefoed attaches scarcity to energy in a specific pure form, exergy. A similar argument put forth by Weinberg [1978, p 15?]

follows his critique of a narrow-minded application of the first-law efficiency concept (the ratio of work output to heat input, cf section 3.2 below):

> "If energy is a scarce resource then clearly there is advantage in using it as efficiently as possible, and radicals and conservatives agree that high first-law efficiency is desirable.
>
> But this in a way is misleading. As the late Professor Joseph Keenan has pointed out, there can be no scarcity of energy because, according to the first law, energy is conserved. Rather, what we lack is energy in a useful form. The usual thermodynamic measure of the usefulness of energy is the *availability*, ...
>
> Since energy at high availability is relatively scarce, whereas energy at low availability is abundant, it makes thermodynamic sense to use energy of low availability for tasks that can be done with low availability, energy of high availability only for tasks that really require high availability."

A similar point was previously made by Berg [1974, p 34] concerning "energy conservation":

> "In present efforts to conserve fuels a great deal has been written, spoken, and in some instances even calculated concerning the possibilities to conserve "energy". As students of thermodynamics know, the first law of thermodynamics guarantees that energy can be neither created nor destroyed; thus it would hardly seem necessary to have a national policy addressed to its conservation."

In economic systems, prices play the rôle of comparing the value of different products or services, this value determined by their usefulness in relation to their scarcity. It would therefore appear to be an obvious step to investigate the effects that different prices would have on the supply of and demand for availability (exergy etc). Such considerations also form a substantial part of our treatment.

Economic problems are usually stated as the maximization (or minimization) of some objective function such as profits, costs, utility etc subject to constraints of various kinds, i e budget constraints, production opportunities, etc. For our purposes there would be two lines of approach; one being to depart from the exergy concept viewing this as the scarce resource to be entered into one or several constraints, the other, more basically oriented, using the second law as the constraint. The first applies the second law implicitly, already having used it in order to arrive at the exergy concept, the second approach applies the second law explicitly, virtually without needing to refer to any preliminary knowledge about the exergy concept at all.

The second line of approach is the one chosen, mainly for the reason that an economic theory of energy scarcity should be more acceptable if it rests on basic physical principles rather than on concepts developed from the same basic principles. It would indeed be astonishing if such an approach led to results in conflict with the alternative direct application of the exergy concept. It will be shown that there is no need for anxiety. The consequences derived from a straight forward reference to the second law are readily reinterpreted in terms of exergy. In fact, this would imply that exergy could be defined starting out from an economic theory to which the second law is applied instead of basing it on physical relationships alone.

Despite the fact that our economic models will establish that exergy indeed is the physical entity to which an economic value should be attached, i e that an exergy price should be *the* economic norm, we shall devote a great deal of space to the exergy concept itself. The reason for this is that there appears to be a need for developing exergy as it appears in literature to more general systems of reference, in particular to multi-source systems. This is also one argument underlying our interest in the symmetry principle.

In brief, the aim of this study has been to investigate what constitutes the economic scarcity of energy in different forms and, consequently, what economic evaluation should then be attached to different qualities of energy. In pursuing this objective a number of issues have been raised, especially the need for a coherent measure of energy quality and the need of viewing "the environment" of a system in more abstract terms.

The product of this study has become a sort of mixture of some basic thermodynamics and some basic economics. Due to the limited number of similar approaches in literature, the one undertaken has been exploratory to a certain extent, and there might be imbalances in the level of significance attached to different items as well as in the logical stringency applied in different sections. Apart from limitations of this nature, there has been a need to limit the richness in the models set forth for different reasons. When defining characteristics of the sources from which energy is to be extracted, or of the lowest quality of energy required in order for it to be used for a certain purpose, etc, often temperatures will be used as the single significant property. Despite of this , it appears as if many limiting assumptions of this kind can be relaxed fairly easily in the future.

1.3. The symmetry principle

In every treatment on exergy or related concepts that we have found in literature, explicit reference has been made to an "environment" having certain constant properties such as a given temperature, a given pressure etc (constant intensive properties). In som cases this environment is referred to as a "medium". Also this environment surrounds one single object (an exception being [Evans, 1969, p 101]), the work potential of which is to be determined. The environment is considered infinite in its extensive properties (volume, material contents etc) which justifies that any interaction

between the object and its environment cannot affect the intensive properties of the environment other than negligably. In one case [Evans, 1969, pp ln, 104-110] the constant properties of the environment have been replaced by the corresponding equilibrium properties that would hold when the object and the environment have been brought into equilibrium with one another. If the formulae set forth are supposed to hold also when the equilibrium intensive properties of the environment are different from their initial values, e g when the environment is finite, such a conclusion would be in error [cf proof in section 5.5]. With constant properties of the environment, these necessarily coincide with the equilibrium properties. Hence, in every case we know of from literature, the environment has been given constant intensive properties.

These two assumptions, (i) an infinite environment and (ii) a single object studied, limit the applicability of the exergy concept for our purposes. In the chapters following we shall therefore develop expressions for cases in which more than one source of energy exists and in which the environment need not be infinite nor have constant intensive properties. Formulae applicable to cases in which the environment has constant properties may then be obtained by forcing the extensive properties of one of the participating objects tend towards infinity.

In order to obtain expressions applicable to cases in which the environment is finite or when no special environment is distinguishable, all objects of the system studied need to be treated on a par with one another and no special significance may be attached to any single object. This is the idea underlying the *symmetry principle*. In more abstract terms, if characteristics of the energy to be extracted from a given system are considered to be a function of the set of properties pertaining to each object of the system, the enumeration of these objects can have no influence on the characteristics of the extracted energy. In other words, the function describing such a relationships must be a symmetric function in its arguments.

Consider a system of N objects, the properties of the ith object collected in a vector x_i. If y is a characteristic of the energy to be extracted, we have a functional relationship of the form:

$$y = f(x_1, x_2, \ldots, x_N) \tag{1.1}$$

The symmetry principle now prescribes that f is invariant with respect to any permutation of the vectors x_j, $j=1,2,\ldots,N$. Such a permutation may be written XP, where X is the matrix into which the vectors are arranged as columns and P a quadratic N-dimensional permutation matrix having precisely one unit-valued element in each row and column and zeros elsewhere. The symmetry principle states that:

$$y = f(XP), \text{ for all } P \tag{1.2}$$

A simple example illustrating this principle is the following. Consider a perfectly inelastic collision between two bodies in colinear motion, these bodies having the masses m_1, m_2 and the velocities v_1^0, v_2^0 prior to the collision (with respect to some frame of reference). Since the momentum is conserved, the mutual velocity after the collision will be:

$$v_1^* = v_2^* = \frac{m_1 v_1^0 + m_2 v_2^0}{m_1 + m_2} \tag{1.3}$$

The difference in total kinetic energy before and after the collision is:

$$\Delta E = \frac{m_1 m_2}{m_1 + m_2} \frac{(v_1^0 - v_2^0)^2}{2} \tag{1.4}$$

This is the amount of energy transformed into heat and deformation energy etc. It is clear that since (m_1, v_1^0) characterizes body 1 and (m_2, v_2^0) body 2, an exchange of these two vectors should have

no influence on ΔE, i e it should be irrelevant how the bodies are enumerated. This is also verified by (1.4); ΔE is indeed a symmetric function of the two vectors. ΔE also is the amount of exergy consumed in the collision, whereas no energy is lost.

If we now let, say m_2, tend towards infinity interpreting body 2 as an environment (such as a stone wall firmly built into the ground into which a car drives), then the amount of energy transformed becomes:

$$\lim_{m_2 \to \infty} \Delta E = \frac{m_1 (v_1^0 - v_2^0)^2}{2} = \frac{m_1 v^2}{2} \tag{1.5}$$

i e we obtain the ordinary expression for the initial kinetic energy of a single body expressed as a function of its own mass and its initial velocity relative to the infinite environment.

This is an asymmetric treatment violating the symmetry principle, but nevertheless for many purposes an accurate and useful approximation.

As a second example, let us consider domestic gas piped into households for heating purposes. A common belief is that it is the gas that by itself transports the energy to be extracted. However, the energy released when burning the gas is a function of the chemical properties of the gas *and* of the surrounding air, the amount of which is assumed unlimited. Energy does not come in pipes, but gas does. The asymmetric view would also be caused by disregarding the infinite environment, i e the surrounding air, as part of the system from which heat is to be obtained. No doubt there is an implicit economic explanation; gas is the scarce resource we pay for, whereas air is free. On a hypothetical planet, the atmosphere of which were hydrocarbons and where oxygen were to be found in the ground, oxygen would be interpreted as the fuel "carrying" the energy. Viewing energy as a kind of fluid would be an idea dating back to the ancient

days of Empedocles and Heraclitus (500-400 BC) assuming fire *(pyros)* to be one of the basic elements constituting the Universe, or later, to Stahl (1660-1734) who introduced the fire substance *flogiston* into the science of chemistry.

A few arguments underlying our symmetry principle have already been mentioned in sections 1.1 and 1.2. Let us add one further point. Some authors [cf e g Thoma, 1977, p 24, 1978, p 3] have expressed a slight reluctance to using the exergy concept since exergy would have to be measured taking a given referential environment into account. According to their conception, exergy is not defined until an environment is sufficiently specified as to its constant intensive properties. As a consequence, for practical application purposes it has also been maintained that there is a need that "agreements be made on workable global and local standards to be applied in this context" [Eriksson, et al, 1976]. However, as will be shown in several instances, with reference to the symmetry principle exergy may be defined and calculated without having to use a referential environment. From a practical point of view, this does not mean that the need for useful standards should be downrated.

1.4. Outline of study

Of the remaining chapters, three will be devoted to determining the exergy potential of a system of objects under different circumstances and two to economic models concerned with energy of different qualities. Before entering into these main parts of the study, two introductory chapters are given, mainly as a brief overview over basic thermodynamic relationships and their application to simple energy transformation equipment and to the exergy concept as it appears in literature.These two chapters would hardly contain any new developments and are included mainly as a service to the reader for defining concepts later to be used and to stress certain items of central importance in the following, such as different aspects of entropy, efficiency ratios and other measures of performance.

In chapter 4 the exergy potential of thermal systems is treated. The term "thermal" is used for characterizing the system under study as mainly having temperatures of the objects belonging to the system as the essential properties. Each object is thereby given one state variable only. In the chapter following, some ideas are generalized to a system of ideal gases, such energy sources now given two basic properties. In a final section a more general multi-property system is also treated but in less detail.

The sixth chapter outlines some ideas concerning the exergy of radiation. This chapter is more preliminary in nature and has been written with the application to solar energy in mind.

Chapters seven and eight introduce economic aspects of the systems previously analyzed. This treatment, however, is almost entirely limited to thermal systems - temperature being the only variable characterizing the quality of energy. One exception (cf section 7.6) treating a system of ideal gases (two-property objects) is included. The first of these two chapters is concerned with economic models of energy extraction (energy "production" according to every-day parlance) and the second with economic models of energy utilization (energy "consumption"). Although no preliminary reference to the concept of exergy needs to be made in most cases, it is shown that the results obtained are easily reinterpreted in exergetic terms. For example, the optimal choice between alternative sources of energy to be provided for a given purpose when given the unit costs associated with these forms of energy, will be determined by ranking the alternatives according to their cost per unit of exergy input inflated for second law efficiences in the transformations following when necessary.

In all economic models treated in which temperature characterizes the energy used, a *temperature-discounted energy price* will be shown to play a fundamental rôle for determining the correct economic value of energy in different qualities. In section 7.6 in which energy quality also is determined by the pressure of the medium used,

a *pressure-discounted price* will be shown to have a similar function.

Chapter 9 provides a summary and some conclusions that might be drawn from the earlier chapters and also points at a few possible lines for future developments.

1.5. Similar ideas in literature

As far as we know, the appoach followed in this study has not been undertaken in previous research. There are, however, a few ideas presented in literature that come close. A brief account of those having closest resemblance is given below.

In a final section of his article "A Steam Chart for Second-Law Analysis", Keenan [1932] presents a short discussion on availability (exergy) and "marketability", including the remark that "there are many indications in the current literature on economics of engineering of dissatisfaction with energy as a basis for cost-accounting methods". Comparing the heat delivered from a central boiling plant in New York to a network supplying office buildings and apartment houses and the heat from power plants delivered into the river as "waste", he suggests an accounting procedure debiting the customers with the exergy of the fluid delivered and crediting them the exergy of the fluid returned. The unit cost of exergy would be determined "from boiler-plant operating costs and fixed charges". Thus Keenan suggests that the economic value of heat should be determined by using an exergy price as a norm. A similar problem will be treated in section 7.3 regarding the value of heat delivered from a power plant and it will be shown that the basic idea of Keenan is correct, provided that consideration is taken to the loss of potential electricity production when cooling the plant at a higher temperature in the pipeline network as compared to cooling it in the river. Also Berry and Fels [1973, p 60] suggest that the real costs of energy should reflect wasted thermodynamical potential, and since the present market does not reflect these, one could explore its inclusion in the regulatory process.

Fratzscher and Gruhn [1965, pp 340-341] present similar ideas, but in a more explicit manner. According to their view, the exergy concept should not only correctly reflect the technical circumstances but also the energy-economic conditions prevailing. The total costs for producing electricity would consist of a fixed cost term plus a term being exergy consumed evaluated at a given "exergy price". The total unit cost of electricity output would then be made up of a fixed cost per unit exergy output (depending on the level of operations) and a unit variable cost obtained as the exergy price divided by the exergy efficiency of the plant. In sections 7.5 and 8.2 this type of measure is indeed shown to be relevant for cost comparisons.

Another model we have found in literature slightly resembling ours is presented in an article by Berry, Salamon and Heal [1978] entitled "On A Relation Between Economic and Thermodynamic Optima". The problem they set forth is to compare the solution to a cost minimization production problem (also possible to interpret as a utility maximization consumption problem) with the thermodynamic problem of determining how much work the factors employed according to such an optimal solution would produce in relation to their ideal maximum work output. If the thermodynamic efficiency should have a certain minimum level, the authors inquire into what additional conditions need to be added in order to ensure that the cost minimization problem would fulfill this requirement? It is shown that with one energy-related production factor and one factor unrelated to energy, the ratio between their prices need to exceed the similar ratio corresponding to an optimum at the exact point where the energy-related input were to have its maximally allowable value above its minimum possible value. Also the similar problem with one energy-related and two unrelated factors is examined.

Among the approaches found in literature, the one coming closest to ours is given in [Borel, 1976, pp 88-93]. Essentially, from an economic point of view,the treatment is identical to that of Fratzscher and Gruhn [op cit] . Borel considers the thermodynamic conditions of a combined thermo-electric power station and the trade-off

opportunities between electricity produced and heat delivered. By defining an exergy price by dividing the total annual expenses of the plant by its total annual potential to provide exergy and then relating this price to the exergetic contents of heat, he arrives at an expression for the dependence of the value of heat on temperature, what we in section 7.2 call the *temperature-discounted* price. A major difference in approach to ours, is that Borel directly attaches an economic significance to exergy as a physical norm, whereas our results are derived from economic optimization models and the exergy price is then a measure obtained by interpreting conditions of optimality.

There appears to have been no previous attempt to formulate economic optimization models applying the second law of thermodynamics as a constraint, nor any related dual problem. Our models in chapters 7-8 follow such an approach.

2.1. Introduction

In this chapter will be given a brief expository description of certain fundamental thermodynamic concepts and their relationships. This overview will be limited to give a sufficient basis for our treatment in later chapters and many items of basic thermodynamics will therefore be left out, when they are considered to be of peripheral use to us in the following. The exposition is elementary for those who are well-briefed in the subject, and is mainly intended for the reader who wishes to quickly review the field. Some terminologica aspects may be significant such as the systems definition given in section 2.2, which differs from its usual thermodynamic definition. Also some notations are different from those employed in standard textbooks.

2.2. Definition of system

A general definition of the concept of a system to be adopted below is the following [Grubbström, Lundquist, 1975, p 2]:

"A system is a collection of elements related to each other in som manner".

We shall typically be dealing with collections of sources given certain properties from which energy is to be extracted. Usually these sources will constitute the elements of a system.

In many cases there is a need to take into account the interaction between the system and objects not belonging to the system. Such objects will then be looked upon as belonging to the *surroundings* or the *environment* of the system. If no interaction at all takes place with the environment, we are dealing with an *isolated* system, if the system and its environment may exchange

energy but no matter it is *closed*, and otherwise it is *open*. In certain cases the environment may be viewed and treated as any other element of the system. If that is so, it can be included into the system making it isolated. In cases of this kind an open or closed system of N elements together with its surroundings therefore will constitute an isolated system of $(N+1)$ elements.

At this point we should point out a difference in the use of the term "system" we apply, as compared with its usual connotation in classical thermodynamics. In thermodynamics the "system" refers to an object or a device etc under investigation being distinct from its surrondings with which it might interact. The object most often would be a piece of equipment, such as an engine, employed as a means for transforming energy of one kind into a preferred type of energy output.

In such a context, the source providing heat to the engine or steam to the turbine etc would not belong to the system, instead being considered a part of the surroundings. For our purposes, however we shall let the term "system" cover not only objects such as devices of the kinds mentioned but also include other distinguishable objects of a more or less abstract nature, particularly heat sources and other energy sources. In cases when we specifically wish to refer to a particular energy transforming object the term "device" or some similar expression will be used. To summarize, a "system" will usually refer to more than one object and include sources (and also sinks) and the "environment" will be interpreted (when appropriate) as a portion of the universe not including the system under investigation.

Usually the environment will be infinite in som property (such as having an infinite heat capacity) and uninfluencable in some property (such as keeping a constant temperature which cannot be affected). In a few of the models we are to treat, we shall

initially let all elements be finite in their dimensions and study consequences as to the behaviour of such a system, after which one element is made to grow beyond all bounds, and we then interpret that element as an "environment".

2.3. Element properties and states

The *state* of an element is a complete discription of its condition at a given point in time. The state is fully determined when values have been assigned to a sufficient number of state variables such as temperature, volume, pressure, density etc. Since the state offers a complete description of the element at any point, any historical developments it might have undergone that may be of significance for its future interaction with other elements or for its own future development must be included when describing its state. This means that the state covers the memorizing of any important historical events. If a state is given, then the path by which that state was reached can have no additional effect on the future of the element. For example, the state of a particle of a given mass m in free motion is given by its three space coordinates and three velocity coordinates.

The variables used for describing a state are *properties* of the element. Certain properties such as temperature or pressure are amenable for being measured by suitable instruments, whereas others such as internal energy or entropy are theoretical properties only accessible for measurement by indirect means. A property may be a *derived property* in the sense that it is defined by reference to other already known properties, such as enthalpy being the sum of internal energy and the product of pressure and volume. In our treatment we mainly confine ourselves to deterministic properties, i e properties that are assumed to undergo no stochastic variations.

It is customany to distinguish between *intensive* and *extensive* properties. Intensive propecties refer to some point of the

object, such as temperature, pressure or density etc, whereas extensive projectie· depend on the extension of the object as a whole, e g its mass, its volume, its total internal energy etc. Usually the objects are considered to be *homogeneous* in their intensive properties, meaning ·hat their temperature and other similar properties are the same throughout the entire body at any particular point in time.

The *state space* is an abstract space in which each of its points refers to a state. A *process* involves a change of state and therefore refers to a path in state space. A *cyclic process* starts in one state and returns to the same state. A process during which the temperature of an object is kept constant is an *isothermal* process, if the pressure is kept constant it is *isobaric* and if the volume is kept constant it is *isochoric*.

Properties of an element are often related to one another either by definition, or shown to be related by experiment and experience. If a certain property at all times is functionally related to other properties, the function involved is a *state function* and the corresponding equation a *state equation*. If z is a property related to M other properties $x_1, x_2, \ldots, x_M$ by a function f:

$$z = f(x_1, x_2, \ldots, x_M) \tag{2.1}$$

then f must obey certain requirements. A change in z will be related to changes $dx_1, dx_2, \ldots, dx_M$ according to:

$$dz = \sum_{i=1}^{M} \frac{\partial f}{\partial x_i} dx_i = \sum_{i=1}^{M} y_i dx_i \tag{2.2}$$

where $y_i = \frac{\partial f}{\partial x_i}$. Since z is a property, its change in value cannot

be influcenced by the path by which the state involving z is reached. This means that $\sum_{i=1}^{M} y_i dz_i$ is an *exact* differential, such a differential having coefficients y_i that obey:

$$\frac{\partial y_i}{\partial x_j} = \frac{\partial y_j}{\partial x_i} \quad i,j = 1,2,\ldots,M \tag{2.3}$$

A given linear differential form $\sum_{i=1}^{M} y_i dx_i$ can therefore be checked as to whether or not it refers to a property change by studying if its coefficients do or do not obey (2.3).

A coefficient y_i in an exact differential is *conjugate* with respect to the corresponding property x_i and vice versa. From a given state function (2.1), new property variables may be defined by a *Legendre transformation* having the general form:

$$Y = f - \sum_{k \in I} y_k x_k \tag{2.4}$$

where I is a subset of the set of all indices $\{1,2,\ldots,M\}$. The number of such subsets excluding the empty set is (2^M-1), which also is the number of possible new properties that can be defined by such transformations. Each such new property is a function of its M *canonical* variables y_k, $k \in I$, and x_k, $k \notin I$. Differentiation of (2.4) yields:

$$dY = \sum_{k \notin I} y_k dx_k - \sum_{k \in I} x_k dy_k \tag{2.5}$$

from which is seen that $\frac{\partial Y}{\partial x_k} = y_k, k \notin I$, and $\frac{\partial Y}{\partial y_k} = -x_k, k \in I$. The original properties and their conjugates can therefore be recovered by simple differentiation of the new property.

2.4. The first law of thermodynamics

An element of a thermodynamic system may interact with other elements or with its environment by exchanging *heat*, *work* or *matter*. Heat and work are different forms of energy, and matter, in a relativistic meaning, also manifests itself as equivalent to energy. According to *the first law of thermodynamics (the energy principle, the conservation law)* energy may neither be destroyed nor created in any physical process. Using the notations dQ for an amount of heat absorbed by the object and dW for an amount of work performed by the object ($dQ<0$, $dW>0$ for heat delivered from and work performed on the object) and disregarding the exchange of matter, the difference $(dQ-dW)$ is an net energy supply to the object. Such a difference must account for a change in the state of the object and thus in a change in one or several of its properties. Depending on the detail by which the object is described, the net energy absorbed or

delivered will cause changes in properties describing the *forms of energy* that the object may possess. Such forms for instance may be *kinetic energy* (from an ordered motion of the particles constituting the element) *potential energy*, *chemical energy*, *magnetic energy* or *internal energy*, the latter property encompassing the disordered microscopic kinetic energies of the particles (and subparticles). For an element not undergoing any change in other energy forms than internal energy, we must therefore have:

$$dU = dQ - dW \tag{2.6}$$

where dU is the change in internal energy resulting from the heat absorption dQ and work performance dW. Since U is a property, dU will be an exact differential, whereas dQ and dW usually are not. The internal energy is thus a theoretical concept not accessible to direct measurement, its existence only postulated by hypothesis.

Eq (2.6) therefore describes the first law in the case when only the internal energy undergoes a change. In the special case of an isolated element we would have $dU=0$. Processes involving no exchange of heat, ie $dQ=0$ throughout the process, are named *adiabatic* processes.

2.5. Equilibrium states and reversible processes

An *equilibrium state* of an object is a state that will not change except from external influence. Such an influence may for instance be to force the volume of the object to be compressed. A *reversible process* (*quasi-static process*) is a process that takes place along a path interconnecting equilibrium states during which work is performed on or performed by the object and heat absorbed by or delivered by the object. The process is reversible if the same set of states can be transversed in the converse order by reversing the sign of the work and/or heat differentials and taking them in the opposite order.

If work is performed by an object on its surroundings by expanding its volume by dV reversibly, it is necessary that the pressure of the object is counterbalanced by an almost equally large external pressure. Using a to represent the pressure of the object, the standard notation p being reserved for prices to be introduced later, if a were greater than the external pressure a_0, the object would perform an expansion work $a_0 dV$ and would simultaneously create dissipative kinetic energies in its surroundings so that the net work on the surroundings would be less than adV. The reversible *expansion* process thus performs the maximum possible work on the environment and, conversely, the reversible *contraction* process requires the minimum amount of work exerted from outside. An exact counterbalance of pressures would neither permit any expansion nor any contraction, and real processes taking place in finite time are therefore *irreversible*. Hence for a reversible process we may write:

$$dU = dQ - adV \tag{2.7}$$

Any spontaneous change that an object undergoes must be irreversible, since its initial state then could not be an equilibrium state. Therefore, all reversible processes must take place with the aid of some outside influence.

2.6. The second law of thermodynamics

The *second law of thermodynamics (the entropy principle)* prescribes in what directions changes in state may take place during the interaction between elements of a thermodynamic system. *Entropy* S may be defined as a state variable related to heat absorbed by an object *during a reversible process*:

$$dQ = TdS \tag{2.8}$$

where T is the absolute temperature at which the heat dQ is received.

The *inequality of Clausius* states that for any process along a closed path we must have:

$$\oint \frac{dQ}{T} \leq 0 \tag{2.9}$$

where the equality sign must hold for a reversible process since dS in (2.8) is a differential of a property and therefore exact. Hence, if a cycle takes place in an object such that a spontaneous and therefore irreversible change between two states (1,2), takes place initially, after which the original state (1) is restored by a reversible heat exchange, we must have:

$$\oint \frac{dQ}{T} = \underbrace{\int_1^2 \frac{dQ}{T}}_{\text{spontaneous path}} + \underbrace{\int_2^1 \frac{dQ}{T}}_{\text{reversible path}} = S^1 - S^2 < 0 \tag{2.10}$$

since dQ is zero in the spontaneous process represented by the first integral in the middle member. Therefore entropy increases $(S^2-S^1>0)$ in any spontaneous process.

In an isolated system of objects, only spontaneous changes may occur. Therefore the total entropy of the system must increase if any change is to take place. Consequently an isolated system in a state of equilibrium possesses its maximum entropy. The second law may thus be written:

$$\Delta S \geq 0 \tag{2.11}$$

where S refers to the total entropy of an isolated system, i e any system considered together with its surroundings.

Let us again consider the closed path made up of an irreversible path $(1,2)$ and a reversible path $(2,1)$. Since U is a property a closed path integral over dU vanishes and using (2.7) and (2.8) we obtain:

$$\oint dU = \underbrace{\int_1^2 dU}_{\text{irreversible path}} + \underbrace{\int_2^1 (TdS - adV)}_{\text{reversible path}} = U^2-U^1 - \int_1^2 (TdS - adV) = 0 \tag{2.12}$$

Since the two states are arbitrary, we therefore have:

$$TdS = dU + adV \tag{2.13}$$

which is the simplest form of the *Gibbs fundamental equation* and holds for a reversible or an irreversible process. More general versions of this equation are given in (2.81), (3.59) and (5.55). Also since $adV \geq dW$, we have:

$$TdS \geq dQ \tag{2.14}$$

with equality for a reversible process. The difference between the left-hand and right-hand members defines a differential which is the *entropy production* $d\hat{S}$:

$$T d\hat{S} = T dS - dQ \tag{2.15}$$

i e the entropy increase above the change justified by the heat transfer in a reversible process. Integrating this equation along a closed path gives us:

$$\Delta\hat{S} = -\oint_j \frac{dQ}{T} \geq 0 \tag{2.16}$$

which leads back to the Clausius inequality (2.9). When there is no heat exchange, i e the process is adiabatic, we obviously have $d\hat{S} = dS$. Any change in entropy is then irreversibly generated.

The second principle makes a firm distinction between work and heat, despite the fact that both are different forms of energy. The two classical formulations of the second principle are as follows:

<u>The Clausius statement</u>

It is impossible to construct a device that operates cyclically having the only effect to transfer heat from a cooler to a warmer body.

<u>The Kelvin-Planck statement</u>

It is impossible to construct a device that operates cyclically having the only effect to perform work and exchange heat from a single heat source.

Both of these two formulations follow from the inequality of Clausius. Concerning the Clausius statement, assume the colder body to have a temperature T_0 and the warmer to have T_1 and let a differential amount of heat transferred to the warmer body be

dQ_1 and to the colder body be dQ_0, negative values of these amounts being heat received by the device. For a cycle the net internal energy as well as the net entropy is zero which implies that $\oint dQ_0 + \oint dQ_1 = 0$ and that the only net entropy change occurs in the environment of the device:

$$\Delta S = \frac{1}{T_0}\oint dQ_0 + \frac{1}{T}\oint dQ = \left(\frac{1}{T_1} - \frac{1}{T_0}\right)\oint dQ_1 \geq 0 \qquad (2.17)$$

which obviously contradicts $\oint dQ_1 > 0$ and $T_1 > T_0$ Concerning the Kelvin statement we have $dQ_1 = 0$, whereas a net amount of work $W = -\oint dQ_0 > 0$ is to be provided. The net entropy change of device and environment is there:

$$\Delta S = \frac{1}{T_0}\oint dQ_0 \geq 0 \qquad (2.18)$$

which contradicts $W>0$. Hence the devices described in the two statements cannot exist. The second principle will be used extensively in chapters to follow in order to distinguish between energy forms of different quality, work being of highest quality attainable. In the course of entropy being produced, energy is degraded from higher to lower qualities and the generation of entropy is the physical explanation for energy, in itself indestructable, being a *scarce* resourse. If the second law

(or any equaivalent law) were not valid, energy would be a free resource. The lack of a second law would also have far-reaching consequences for the very basics of physics concerning among other things the flow of time (what is past, present or the future), or the possibility to record events, i e to memorize, and to the question of life itself.

2.7. Typical entropy generating processes

2.7.1. Heat conduction

One of the simplest forms of entropy generation takes place in *heat conduction*. Consider two bodies to be connected by a conductor (cf figure 2.1) one having the lower constant temperature T_1 and one the higher constant temperature T_2. Consider an element of the conductor between coordinates x and $x+\Delta x$. When Δx is small, the boundary temperatures of the element differ only slightly and the element will almost be in thermal equilibrium with its surroundings. The entropy production rate in the element due to the inflow Q and outflow of heat $-Q$ will be made up of two terms and according to (2.15) is:

$$\Delta\hat{S} = \Delta S_{inflow} + \Delta S_{outflow} - \frac{Q}{T(x)} + \frac{Q}{T(x+\Delta x)} =$$

$$= -Q\,\frac{\Delta T}{T(x+\Delta x)T(x)} \tag{2.19}$$

where the two terms in the middle member vanish since there is no net change in state of the element in an equilibrium case. The total rate of entropy generated will thus be:

$$\hat{S} = -Q\int_{T_1}^{T_2}\frac{dT}{T^2} = Q(T_1^{-1}-T_2^{-1}) \tag{2.20}$$

If the conductivity is k and the cross section area of the conductor A, we also have $Q = Ak(T_2-T_1)$, which gives us:

$$\hat{S} = \frac{Ak(T_2-T_1)^2}{T_1T_2} = \frac{Q^2}{AkT_1T_2} \tag{2.21}$$

This shows the entropy generation rate to increase quadratically with the magnitude of a finite temperature difference and with the magnitude of a heat flow.

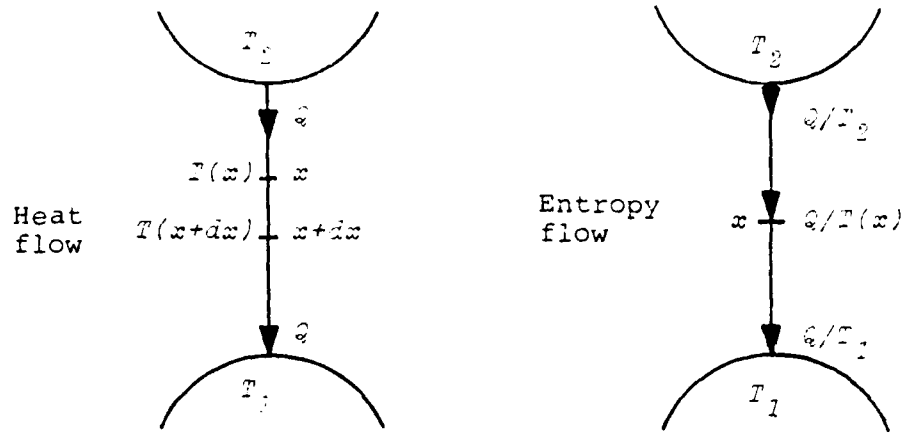

Figure 2.1. Entropy generation due to heat conduction

It is instructive to associate an entropy *flow* with the heat flow in the conductor, both having the same direction, as is also shown in figure 2.1. Although the heat flow is preserved along the conductor, this is not true for the entropy flow, since entropy is generated in the process. The entropy leaving the higher temperature body is Q/T_2 and the entropy reaching the lower temperature body Q/T_1, the difference being entropy generated $Q(1/T_1-1/T_2)$ as also given by (2.20).

2.7.2. Equalization processes of ideal gases.

As a second instructive example of entropy generating processes we consider a system of two compartments having a mobile wall (no friction) as is shown in figure 2.2. The compartments are filled with two different ideal gases. An *ideal gas* is defined by two characteristics, viz that its internal energy U is a function of its temperature alone, and that its pressure, volume and temperature obey the *universal gas law*:

$$pV = RnT \tag{2.22}$$

where a is pressure, V volume, n number of moles occupying this volume, T absolute temperature and R the *universal gas constant*:

$$R = 8.3144 \quad [Ws\ mole^{-1}\ K^{-1}] \tag{2.23}$$

The first property may be written as the condition:

$$\frac{\partial U}{\partial V} = 0 \tag{2.24}$$

The *heat capacity at constant volume* is defined by:

$$c = \frac{\partial U}{\partial T} \tag{2.25}$$

which can only depend on T, since U is a function of T alone. We shall assume the heat capacities of the two gases considered to be constants c_1 and c_2 respectively.

For an ideal gas with constant heat capacity, its entropy, being a state function, may be derived by considering a reversible process involving a heat increase by dQ and a simultaneous work differential performed by the gas on its surroundings by adV. The net change in internal energy is therefore:

$$dU = dQ - adV = TdS - adV = cdT \tag{2.26}$$

Using (2.22) and solving the resulting differential equation gives us:

$$S = S_0 + c\ logT/T^0 + Rn\ logV/V^0 \tag{2.27}$$

where T^0, V^0 are initial values of the two state variables. The entropy S is defined up to an arbitrary additive constant S_0. However, according to the *third law of thermodynamics* (*Nernst's law*), entropy has an absolute zero at $T=0$. For all practical purposes, only differences in entropy are of interest and the constant S_0 can therefore be omitted.

Let us now consider the system depicted in figure 2.2. If the two gases initially are different, then obviously the volume having highest pressure will expand and the other volume contract. Since it is a spontaneous process, it is irreversible and the total entropy of the system will increase. Initially we assume the wall to be a perfect insulator, making the process adiabatic.

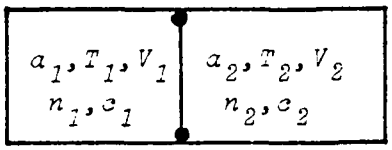

Figure 2.2. A two-compartment system containing different ideal gases

The motion of the wall will end when the two pressures are equalized. As a second step we let the wall be a heat conductor enabling also the temperatures to equalize. This raises entropy by an additional amount. Thirdly, we let the two gases mix by taking away the wall. This also will add to entropy. As a final step we investigate what effect the ratio between the number of moles of the two gases will have on the entropy level. The total volume is assumed to be fixed at the level $\hat{V}$.

The system is perfectly isolated from its environment which means that the total internal energy must remain constant:

$$\Delta U_1 + \Delta U_2 = c_1 T_1 + c_2 T_2 - c_1 T_1^0 + c_2 T_2^0 = 0 \tag{2.28}$$

where superscripts zero denote initial values. This equation shows that the two temperatures are monotonically decreasing functions of each other:

$$\frac{dT_2}{dT_1} = -\frac{c_1}{c_2} < 0 \tag{2.29}$$

The condition of equal pressure will relate final volume to temperature:

$$a_1 = \frac{Rn_1T_1}{V_1} = \frac{Rn_2T_2}{V_2} = a_2 \tag{2.30}$$

from which we obtain:

$$\begin{cases} V_1 = \dfrac{n_1T_1\hat{V}}{n_1T_1+n_2T_2} \\ V_2 = \dfrac{n_2T_2\hat{V}}{n_1T_1+n_2T_2} \end{cases} \tag{2.31}$$

The change in entropy of compartment 1 will therefore be:

$$S_1 = c_1 \log\frac{T_1}{T_1^0} + Rn_1 \log \frac{n_1T_1\hat{V}}{(n_1T_1+n_2T_2)V_1^0} \tag{2.32}$$

which is a strictly increasing function of T_1 and a decreasing function of T_2. Hence we have:

$$\frac{dS_1}{dT_1} = \frac{\partial S_1}{\partial T_1} + \frac{\partial S_1}{\partial T_2}\cdot\frac{dT_2}{dT_1} > 0 \tag{2.33}$$

and a similar condition for S_2. Since any change in T_1 is accompanied by an opposite change in T_2, entropy will increase for one of the compartments and decrease for the other. The possible end states of the process have to satisfy:

$$S = S_1 + S_2 = c_1 \log\frac{T_1}{T_1^0} + Rn_1 \log \frac{n_1T_1\hat{V}}{(n_1T_1+n_2T_2)V_1^0} +$$

$$+ c_2 \log\frac{T_2}{T_2^0} + Rn_2 \log\frac{n_2T_2\hat{V}}{(n_1T_1+n_2T_2)V_2^0} \geq 0 \tag{2.34}$$

together with (2.28). S also equals $\hat{S}$ since the system is isolated. A total differentiation of S with respect to T_1 yields:

$$\frac{dS}{dT_1} = \frac{T_2 - T_1}{T_1 T_2}\left(c_1 + \frac{Rn_1 n_2}{c_2} \cdot \frac{c_1 T_1^0 + c_2 T_2^0}{n_1 T_1 + n_2 T_2}\right) \tag{2.35}$$

The volume having highest initial pressure will intially perform work on the other volume and a subsequent damped oscillatory process might be expected. Thus the volume with highest initial temperature will reduce its internal energy and therefore its temperature, raising the temperature of the second compartment. Solving the inequality (2.34) combined with (2.28) will give the permissible end states. The interval obtained will neither have T_1^0 nor T_2^0 as end points.

When $T_2 > T_1$, i e:

$$c_1(T_1^0 - T_1) + c_2(T_2^0 - T_1) > 0 \tag{2.36}$$

there will be an opportunity to increase S further according to (2.35) by raising T_1 and lowing T_2 (by conduction) and vice versa. S will thus take on its maximum for this second process when:

$$T_1 = T_2 = \frac{c_1 T_1^0 + c_2 T_2^0}{c_1 + c_2} \tag{2.37}$$

Inserting these values into (2.34) gives the total increment in entropy from the two processes combined. Assuming that these have taken place, we now study the effects of taking the wall away allowing the two gases to mix. The additional increment in entropy then becomes:

$$\Delta S = Rn_1 \log\frac{n_1+n_2}{n_1} \cdot \frac{V_1}{\hat{V}} + Rn_2 \log\frac{n_1+n_2}{n_2} \cdot \frac{V_2}{\hat{V}} \tag{2.38}$$

where V_1 is the new volume of gas 1 etc. Obviously ΔS increases both in V_1 and V_2 and the maximum entropy will be obtained when both gases occupy the total common volume $\hat{V}$:

$$\Delta S_{max} = R(n_1 \log\frac{n}{n_1} + (n-n_1) \log\frac{n}{n-n_1}) \qquad (2.39)$$

where n is the total number of moles.

Differentiation of this expression shows that ΔS_{max} will take on its very maximum for $n_1=n/2$ and will approach zero either when $n_1 \to 0$ or $n_1 \to n$. Hence entropy will have its greatest value when the gases have the same molar content, ie when the number of molecules of each kind are equal. This gives us the value:

$$\Delta S_{max} = Rn \log 2 \qquad (2.40)$$

This also gives an indication that entropy is related to combinatorial and probabilistic measures, which is the statistical interpretation of entropy to be described in section 2.8.

The description above has had the purpose to show how entropy may be generated from a number of different causes, first from an equalization of pressures, then of temperatures, then a mixing and finally by choosing the molar contents equal. A different pressure equalization process involving a substantial entropy generation takes place in throttling.

2.7.3. Practical real-life examples of entropy generation.

Despite the fact that energy as such is never destroyed, it still is considered as a scarce resource. This is entirely due to consequences of irreversibilities taking place in all natural processes. As already pointed out, any spontaneous change necessarily produces entropy as does any induced change taking place in finite time, since such changes can only be made when having caused imbalances. It is therefore not energy in itself that is required, but rather energy in a specific form so that its interaction with the object considered will restore the state of the object to a desired level or cause some other desired change in its state.

Typical examples of practical entropy generation may be heat conduction into or out of domestic spaces, pollution in its various form, aging including metabolistic processes, friction, wear and tear etc.

The human body requires a surrounding temperature in the neighbourhood of 293 K. Outdoor temperatures, however, often differ quite much from this desired level. In cold regions a desired indoor temperature will exceed the ambient temperature causing a non-zero temperature gradient, which, since the shell of a domestic area is no perfect insulator, gives rise to a flow of heat tending to equalize the indoor and outdoor temperatures, i e to increase entropy through heat transfer. In order to prevent the indoor temperature from dropping, an outside delivery of energy compensating for the entropy flux to the exterior must be undertaken. In order for the indoor temperature to be restored, the delivered energy must have a higher temperature than the desired level for an entropy influx to occur. If the energy delivered is carried in the form of hot steam of temperature T_2, the indoor temperature is T_1, the outdoor temperature T_0 and the heat outflux Q, then, according to (2.20), total entropy will increase by $Q(T_0^{-1}-T_1^{-1})$ from the leakage through the walls etc and by $Q(T_1^{-1}-T_2^{-1})$ from the interaction between the radiators and the indoor air when the space is heated, i e a total of $Q(T_0^{-1}-T_2^{-1})$.

Since entropy generation diminishes the future availabilities to create desired changes in state (e g to keep houses warm), from a pure resource point of wiew it would be desirable to keep the rate of generation as low as possible, which implies that we ought to feed houses with energy having a temperature only slightly above the desired level. In such a case, however, the heating process would take place slowly, perhaps so slowly that the desired level never could be reached. However, in the case of resistance heating of domestic areas, it is still very far before we are close to any such limit. One might view this

problem as an allocation process over time. If results are to be reached rapidly, then greater sacrifices in the form of resource consumption are inherently present.

When the ambient temperature is high, there is a desire to create an entropy outflux. A simple analogy with the space heating process would be the delivery of an ice block to be used for cooling indoor space. Since a heat outflux implies a decrease in total entropy, a process restoring a lower temperature must involve som external increase in entropy. An example is keeping watertanks on house roofs in hot climates. The evaporation of steam, similar to a mixing process, keeps the roof temperature low while creating entropy in a typically irreversible process. A more complicated example is offered by an airconditioning system. The heat outflux and associated entropy decrease is compensated for by an entropy generation using energy of high temperature which dissipates into the surroundings during the process. In an airconditioned automobile such energy would be released by oxidizing fuel.

The aging of equipment, such as rusting and other corrosion, involves a spontaneous process and therefore an entropy production. Restoring the functional capability of the equipment would therefore imply a reduction in entropy necessarily compensated for by some entropy generation elsewhere. Reinvestments, therefore, must take place at the expense of an irrevocable resource consumption. When some piece of equipment is repaired, if it is done carefully it will take a longer time creating less entropy, if it is done carelessly it might take a shorter time but at the expense of a greater entropy production.

Pollution involving an undesirable mix of waste products and nature, also creates entropy as does any contamination. Cleaning-up therefore decreases the entropy of the object decontaminated simultaneously producing entropy at the other end, e g by waring out the cleaning equipment used, by transforming electricity

applied to a vacuum cleaner into waste heat etc. In order to prevent entropy production we are accustomed not to mix dry and damp or clean and dirty washing. The second law requires that moist would not be transferred from a dryer to a damper material, nor dirt from a less clean to a cleaner material. Since reinvestments decrease the entropy of an object, it is not far off to generalize this statement to cover all real capital accumulation. lation. This leads to the observation that all organizing activities of humans and other living beings would tend to decrease the entropy of the universe. By the second law, however, such activities must necessarily be accompanied by some entropy increasing process elsewhere. This has been denied by some scientists refuting the second law as being invalid to life activities. Their opinion, however, appears to be one of a minority. An interesting discussion on this topic is provided by the dialogue between Sir James Jeans [1934b], one the one hand, and F G Donnan and E A Guggenheim [1934], on the other. Other references are Jeans [1934a] and Raymond [1950], and Morod [1972].

Transportation horisontally involves no change in potential energy. For the process to be carried out in finite time, a vehicle at rest must be accelerated, transforming an energy input (eg from oxidizing fuels) into kinetic energy. Frictional forces to be overcome by the vehicle involve work performed on the environment which dissipates into the form of frictional heat, particularly when the vehicle is made to stop by applying brakes. The service delivered by transportation on a horizontal surface therefore involves a "pure" entropy production, i e no essential change in state from a thermodynamic point of view apart from this. Other everyday examples are easily found.

As a final example in this subsection let us choose the exchange of heat between the Sun, the Earth and the Universe as described in [Thoma, 1977]. Solar radiation emitted at *6000 K* reaches the Earth in the amount of *175000 TW* which corresponds to an incoming entropy flow of *30 TW/K*. Radiation leaving the Earth

is of the same order of magnitude but takes place roughly at *250 K*, corresponding to an entropy outflow of *933 TW/K*. Hence the Earth has a net outflow of entropy in the order of *900 TW/K*. This fact, although a perfectly essential condition, provides a partial answer for explanining the opportunity for well-structured red living organisms to be in existence on Earth.

2.8. Entropy from a microscopic point of view

In section 2.6 entropy was defined as a state function of an object relating a reversibly absorbed heat increment dQ to the absolute temperature T of the body, $dS = dQT^{-1}$. Temperature is an average intensive property of the object and entropy may therefore be said to have been defined from a *macroscopic* point of departure, i e without relating it to the microscopic particles and subparticles constituting the object. In this section we shall briefly provide a supplementary presentation of the concept of entropy from a *microscopic* point of view.

We assume the existence of N indistinguishable non-interacting particles, each of which may be able to occupy one of several possible energy levels $\varepsilon_1, \varepsilon_2, \ldots, \varepsilon_M$. If the number of particles occupying energy level ε_i, i e state i, is N_i, the total energy of the object will be:

$$U = \sum_{i=1}^{M} N_i \varepsilon_i \tag{2.41}$$

Our treatment will follow the *Bose-Einstein statistics* as given in i e [Holman, 1969]. For the alternative approach, the *Fermi-Dirac statistics* (the *Maxwell-Bolzmann statistics* being a limiting case of both), the reader is referred to the literature.

The Bose-Einstein statistics assume that the energy level ε_i can be attained by a particle in φ_i different ways, i e φ_i *quantum states*. The number φ_i is called the *degeneracy* and

represents a statistical weight of the energy level ε_i. These states may be interpreted as the different energy modes the particles may have, such as rotational or translational kinetic energies. For energy level ε_i there are N_i particles to be assigned to the φ_i quantum states. If we arrange a sequence of the states and the particles such that particles lying in between two states belong to the former state, there will be altogether $(\varphi_i-1+N_i)!$ different sequences of this kind beginning with a state (which is necessary since each particle must belong to a state). An object in which each individual particle is known as to what quantum state it belongs is said to occupy a *microstate*. The order in which the states are arranged in the sequences is immaterial for specifying the microstate. Since there are $(\varphi_i-1)!$ different ways in which the states may be ordered, the total number of microstates will be $(N_i+\varphi_i-1)!/(\varphi_i-1)!$ as regards the ith energy level. If the particles have no identity of their own there will be $N_i!$ indistinguishable ways in which the particles can be arranged in the sequences and the total number of distinguishable arrangements of the particles in the quantum states will be reduced to $\binom{N_i+\varphi_i-1}{\varphi_i-1} = \frac{(N_i+\varphi_i-1)!}{N_i!(\varphi_i-1)!}$. The total number of distinguishable states of all N particles is therefore:

$$\Omega = \prod_{i=1}^{M} \binom{N_i+\varphi_i-1}{\varphi_i-1} \tag{2.42}$$

The number of states Ω (sometimes called the *thermodynamical probability*) is obviously dependent on the distribution of the N particles among the different energy states. It may be interpreted as the number of possible states of the object as a whole, when given its total internal energy and its distribution of particles among the energy levels. When this distribution is specified the object is said to occupy a certain *macrostate*. Assuming each distinguishable state to be equally likely, it is of interest to find the distribution having the largest number of states, i e the most likely distribution or most likely

macrostate, which also will be the equilibrium state.

We therefore maximize Ω in (2.42) over all distributions subject to the two constraints:

$$\sum_{i=1}^{M} N_i = N \tag{2.43}$$

$$\sum_{i=1}^{M} N_i \varepsilon_i = U \tag{2.44}$$

The distribution thus obtained will have the largest number of states and, in this sense it will be the most probable distribution. *Entropy* may now be defined as a constant multiple k of the logarithm of the maximum number of states for any distribution, i e:

$$S = k \log \Omega_{max} \tag{2.45}$$

where k is *Bolzmann's constant* ($1.380 \cdot 10^{-23}$ $Ws \cdot K^{-1}$). The reason for choosing the logarithm of Ω rather than Ω itself is to obtain additivity regarding the contribution to S from the M energy levels. In order to find the distribution maximizing Ω and therefore maximizing $\log \Omega$, we form the Lagrangean:

$$L = \log\Omega + \mu(N - \sum_{j=1}^{M} N_j) + \lambda(U - \sum_{j=1}^{M} N_j \varepsilon_j) =$$

$$= \sum_{i=1}^{M} \left(\sum_{j=1}^{N_i+\varphi_i-1} \log j - \sum_{j=1}^{N_i} \log j - \sum_{j=1}^{\varphi_i-1} \log j \right) +$$

$$+ \mu(N - \sum_{j=1}^{M} N_j) + \lambda(U - \sum_{j=1}^{M} N_j \varepsilon_j) \tag{2.46}$$

where μ and λ are Lagrangean multipliers. L will be maximized for the largest N_i satisfying:

$$S(N_i) - S(N_i-1) = \log(N_i+\varphi_i-1) - \log N_i - \mu - \lambda\varepsilon_i \geq 0 \quad (2.47)$$

If N_i is large, we would expect this inequality to be close to an equality, from which we obtain the solution:

$$\frac{N_i}{\varphi_i-1} = \frac{1}{e^{\mu+\lambda\varepsilon_i}-1} \quad (2.48)$$

The multipliers μ, λ are implicity determined by (2.43)-(2.44) giving:

$$\sum_{i=1}^{M} \frac{\varphi_i}{e^{\mu+\lambda\varepsilon_i}-1} = N \quad (2.49)$$

$$\sum_{i=1}^{M} \frac{\varphi_i\varepsilon_i}{e^{\mu+\lambda\varepsilon_i}-1} = U \quad (2.50)$$

From the state equation (2.13), for an isolated object in a constant volume process we find:

$$\frac{\partial S}{\partial U} = T^{-1} \quad (2.51)$$

If we assume a differential change by δN in the parameter N and by δU in the parameter U, from (2.43)-(2.44) the resulting changes in N_i, written δN_i, must satisfy:

$$\sum_{i=1}^{M} \delta N_i = \delta N \quad (2.52)$$

$$\sum_{i=1}^{M} \varepsilon_i \delta N_i = \delta U \quad (2.53)$$

The resulting change in $\log\Omega_{max}$ is therfore:

$$\delta \log \Omega_{max} = \sum_{i=1}^{M} \frac{\partial}{\partial N_i} (\log(N_i+\varphi_i-1) - \log N_i)\,\delta N_i =$$

$$= \sum_{i=1}^{M} (\mu+\lambda\varepsilon_i)\,\delta N_i = \mu\,\delta N + \lambda\,\delta U \tag{2.54}$$

where (2.47) has been used. Hence we obtain:

$$\mu = \frac{\partial \log \Omega_{max}}{\partial N} = k^{-1}\,\frac{\partial S}{\partial N} \tag{2.55}$$

$$\lambda = \frac{\partial \log \Omega_{max}}{\partial U} = k^{-1}\,\frac{\partial S}{\partial U} \tag{2.56}$$

The latter equation shows on comparison with (2.51) that:

$$\lambda = (kT)^{-1} \tag{2.57}$$

A similar interpretation of the first multiplier μ is not equally accessible.

In the case that all N_i and φ_i are very large, we may apply Stirlings's formula:

$$\log x! \approx x(\log x - 1) \tag{2.58}$$

to (2.45), which gives us:

$$S = k\left(\sum_{i=1}^{M} N_i \log\left(1+\frac{\varphi_i}{N_i}\right) + \varphi_i \log\left(1+\frac{N_i}{\varphi_i}\right)\right) \tag{2.59}$$

When also $\varphi_i >> N_i$, $\log(1+N_i/\varphi_i) \approx N_i/\varphi_i$ and we may write:

$$S = k \sum_{i=1}^{M} N_i \log\left(1+\frac{\varphi_i}{N_i}\right) + kN =$$

$$= k \sum_{i=1}^{M} N_i\left(\mu+\frac{\varepsilon_i}{kT}\right) + kN = k(\mu+1)N + \frac{U}{T} \tag{2.60}$$

which shows S as a function of U, T and μ. By defining a *partition function* Z by:

$$Z = \sum_{i=1}^{M} \varphi_i \, e^{-\varepsilon_i/kT} \tag{2.61}$$

we find for the case $\varphi_i >> N_i >> 1$:

$$U = kNT^2 \frac{\partial \log Z}{\partial T} \tag{2.62}$$

$$\mu = kN \log \frac{Z}{N} \tag{2.63}$$

which enables us to write S as a function of Z and T alone:

$$S = kN(1+\log\frac{Z}{N} + T \frac{\partial \log Z}{\partial T}) \tag{2.64}$$

For a monatomic Bose-Einstein gas, it can be shown that Z is proportional to $T^{3/2}$ and to V, which used in (2.62) yields:

$$U = \frac{3}{2} kNT \tag{2.65}$$

Also from (2.13) we have the following expression for the pressure:

$$a = - \frac{\partial U}{\partial V} + \frac{\partial TS}{\partial V} \tag{2.66}$$

For a monatomic gas Z is proportional to V and since U is independent of V, we obtain:

$$a = kNTV^{-1} \tag{2.67}$$

By comparing this formula with the universal gas law (2.22) we find the identity:

$$Rk^{-1} = Nn^{-1} = N_0 \tag{2.68}$$

where R is the universal gas constant, n the number of moles and N_0 Avogadro's number, i.e the number of atoms (or molecules) occupying one mole of any substance:

$$N_0 = 6.023 \cdot 10^{23} \tag{2.69}$$

Using the two properties of Ω for a monatomic gas and applying these to (2.64) finally yields:

$$S = S_0 + kN(\frac{3}{2}\log T + \log V) = S_0 + (\frac{3nR}{2}\log T + R\log V) \tag{2.70}$$

which when compared with (2.27) shows that the heat capacity at constant volume is given by:

$$c = \frac{\partial U}{\partial T} = \frac{3}{2}Nk = \frac{3}{2}nR \tag{2.71}$$

2.9. Entropy and information

In the foregoing section entropy was defined as a constant multiple of the logarithm of the maximum number of states that a system with a given number of particles could have given the total energy of the object. By maximizing the number of indistinguishable states we obtained the most likely distribution of energies that the particles would have. A higher entropy corresponds therefore to a more probable state. If a measurement could be performed revealing what state the object were in, a higher entropy state would provide us with less information and vice versa. Hence there is a strong linkage between thermodynamics and information theory as pointed out first by Szilard [1929] and later by Brillouin [1950, 1962] and also noted by Shannon and Weaver [1962], who founded the basis of *information theory*.

Information theory is basically concerned with the average number of symbols that are necessary to use in order to transmit messages from a transmitter to a receiver, when the messages are sent with different probabilities. Each message is coded by using a sequence of symbols from a code alphabet of r symbols. It may be shown [cf e g Abramson, 1963] that the average number of code symbols per message must be at least:

$$S = - \sum_i \gamma_i \, {}^r\log \gamma_i \tag{2.72}$$

where γ_i is the probability of the ith kind of message being sent. The quantity S is defined as the *entropy* of the information source and may be given either the interpretation of the average amount of information per message sent by the source, or the average amount of uncertainty the receiver has before receiving a message. The logarithmic base chosen (r) only accounts for a measure of unit. A different base will give a different unit, eg the base 2 measures S in *bits* and the natural base e in *nats*, one bit being ${}^e\log 2 = .693$ nats. The greater the value of S the more likely is each message on the average, its maximum value taken on when all γ_i are equal.

The definition in (2.72) may be generalized to cover continuously distributed events corresponding to some stochastic variable with density $f(x)$. In such a case S is often defined by:

$$S = - \int_{-\infty}^{\infty} f(x) \log f(x) \, dx \tag{2.73}$$

It may be shown that among the distributions covering a finite interval $x \in [a,b]$ the rectangular distribution maximizes S, among those having a given mean and covering the positive axis $[0,\infty[$ the negative exponential distribution maximizes S, whereas among distributions covering the entire axis and having a given variance, the normal distribution maximizes S. Entropy according to (2.73) is thus strongly related to three frequently used continuous distributions.

Apart from comparing the two entropy concepts in terms of likeliness of states occuring (messages sent), we may study the identical form of (2.72) and the expression for the entropy increase when mixing gases (2.39) now generalized to:

$$\Delta S_{max} = -R \sum_i n_i \log \frac{n_i}{n} \tag{2.74}$$

where R is the universal gas constant and n_i the number of moles of the ith gas among the gases to be mixed. Since $n_i N_o = N_i$ is the number of particles of the ith gas, according to (2.68) we find that:

$$\Delta S_{max} = - kN \sum_i \gamma_i \log \gamma_i \tag{2.75}$$

where $\gamma_i = N_i/N$ is the fraction of particles belonging to the ith gas. The similarity with (2.72) is obvious and Bolzmann's constant enters in the same way as in (2.45). Apart from k, which may be given the value unity by a suitable choice of temperature scale, see table 2.1 below, the entropy increase according to (2.75) may be interpreted directly as the average uncertainty carried by each particle as to its classification among the substances present.

It may be pointed out that the expression in (2.73) is subject to the weakness of not being invariant with respect to transformations of the scale x chosen. The product $f(x)dx$ lacks dimensionality, whereas $f(x)$ has the dimension of probability per measured unit of . Therefore $\log f(x)$ depends on the unit of x chosen and so does also S. Jaynes [1962, pp 201-202] proposes the more general expression $- \int_0^\infty f(x) \log(f(x)m(x)^{-1})dx$ where $m(x)$ is a measure function describing how, in the limit, the continuous scale x was reached from an original discrete set of points departed from. Since $f(x)m(x)^{-1}$ is invariant with respect to transformations of x, so will also S be. However, applying this expression will necessitate the choice of a basic measure possibly involving an additional problem.

	Celsius scale	Kelvin scale	Scale with $k=1$	Scale with $R=1$
	$T-273.16K$	T	$T'=T\cdot 1.380\cdot 10^{-23}$	$T''=T\cdot 8.4\cdot 10^{-2}$
Absolute zero	-273	0	0	0
Freezing point of water	0	273	$3.8\cdot 10^{-21}$	2300
Body temperature	37	310	$4.3\cdot 10^{-21}$	2600
Boiling point of water	100	373	$5.1\cdot 10^{-21}$	3100
Melting point of iron	1535	1808	$25\cdot 10^{-21}$	15000
Surface temperature of the sun	6000	6300	$90\cdot 10^{-21}$	50000

Table 2.1. Temperature scales giving unit values to k and to R respectively

Some studies have been made regarding the total information content in man-made structures from an entropy point of view. Thoma [1977] provides an example estimating the information content in a steam locomotive ($8\cdot 10^4$ bits) and in a diesel locomotive ($33\cdot 10^4$ bits) and Berry and Fels [1973] a similar estimation concerning an automobile. For further discussions as to the identity between the thermodynamic and the information-theoretic entropy concepts, the reader is referred to [Brillouin, 1962], and concerning the information content related to biological structures to [Crick, 1967].

2.10. Applications of the entropy concept in other fields.

It has already been pointed out in section 2.7.3 that aging, wear and tear etc, are phenomena revealing the increase of entropy. They also reveal the passage of time. A number of philosophers, among them notably Reichenbach [1956] and Grünbaum [1963] have indeed defined the time evolution of processes as the direction in which entropy increases. Due to the irreversibility of entropy generation, it also acts as a source for recording past events, and the lack of such a phenomenon would provide us with no means for memorizing or recording, cf also [Layzer, 1955]. Entropy applied to the time evolution of economic activities is treated by Murphy [1965] and by Georgescu-Roegen [1971].

Entropy has also been used in many recent cases to provide a measure of dispersion as a substitute for the standard deviation or variance etc. Current applications concern e g the size distribution of firms [Näslund, 1971], structures of traffic networks [Erlander, 1980] and aggregation measures in planning problems [Erlander, 1977, Eberstål, 1979]. An interesting overview over economic applications (including portfolio theory, inter alia) is presented in [Horowitz, Horowitz, 1976]. Arumi [1973] applies statistical thermodynamic concepts to demographic theory and reaches conclusions well in accordance with empirical measurement A G Wilson [1970,1974] applies entropy maximizing methods to regional and urban models of spatial interaction, such as the interaction between a residential population and their assignment to jobs.

2.11. Some further basic thermodynamical concepts and relationships

In section 2.3 we defined Legendre transformations pertaining to a given state function. These transformations define new state variables from the differential coefficients of the state function differentiated. When the internal energy U of an object in an equilibrium state is considered as a state function of its volume

V, its entropy S and its composition described by the number of moles of different substances $n_1, n_2, \ldots, n_M$ constituting the object, where M is the number of substances, we have a state equation of the form:

$$U = U(V, S, n_1, n_2, \ldots, n_M) \tag{2.76}$$

For differential changes in the variables by $dV, dS, dn_1 dn_2, \ldots, dn_M$, internal energy will change by:

$$dU = \frac{\partial U}{\partial V} dV + \frac{\partial U}{\partial S} dS + \sum_{i=1}^{M} \frac{\partial U}{\partial n_i} dn_i \tag{2.77}$$

For an object of constant composition all dn_i are zero-valued and a comparison with (2.13) gives us:

$$\frac{\partial U}{\partial V} = -a \tag{2.78}$$

$$\frac{\partial U}{\partial S} = T \tag{2.79}$$

i e that pressure (negated) is a conjugate variable of volume and temperature a conjugate variable of entropy. The remaining conjugate variables defined by (2.77) are called *chemical potentials* of the respective substances and written:

$$\mu_i = \frac{\partial U}{\partial n_i} \qquad i=1, 2, \ldots, M \tag{2.80}$$

Hence the following differential relationship is valid for changes in state:

$$dU = -a dV + T dS + \sum_{i=1}^{M} \mu_i \, dn_i \tag{2.81}$$

By using the conjugate variables $-a$ and T three new state variables may be defined by the following Legendre transformations (cf (2.4)):

$$H = U + aV \tag{2.82}$$

$$A = U - TS \tag{2.83}$$

$$G = U + \alpha V - TS \tag{2.84}$$

These new variables are the *enthalpy* (or *total heat*) H, the *Helmholz function* (or *free energy*) A, and the *Gibbs function* (or *free enthalpy*) G.

Let us now study two bodies in equilibrium, each made up of the same components, the same volume and occupying identical states in all respects. If these bodies are assembled, then clearly all extensive properties, i e internal energy, entropy, volume and molar contents of the two bodies combined will have values at twice the similar values of each individual body. More generally, if each of these variables are increased or decreased by a scale factor x, we would have:

$$\begin{cases} U(x) = xU(1) \\ S(x) = xS(1) \\ V(x) = xV(1) \\ n_i(x) = xn_i(1) \quad i=1,2,\ldots,M \end{cases} \tag{2.85}$$

Assuming a change in scale to take place by dx, we thus obtain:

$$dU = U(1)dx = \left(\frac{\partial U}{\partial S} S(1) + \frac{\partial U}{\partial V} V(1) + \sum_{i=1}^{M} \frac{\partial U}{\partial n_i} n_i(1)\right)dx \tag{2.86}$$

Since the choice of unit scale is arbitrary and (2.86) must hold for any change dx, we have the following relationship:

$$U = TS - \alpha V + \sum_{i=1}^{M} \mu_i n_i \tag{2.87}$$

which must hold for any state. By (2.84) this equation can also be written:

$$G = \sum_{i=1}^{M} \mu_i n_i \tag{2.88}$$

This means that all extensive properties U, S, V, G etc are linearly homogeneous functions of the molar contents $n_1, n_2, \ldots, n_M$. Differentiating (2.87) and using (2.73) gives us the *Gibbs-Duhem equation*:

$$SdT - Vda + \sum_{i=1}^{M} n_i d\mu_i = 0 \tag{2.89}$$

which also must hold for any change in state. Under certain circumstances the three functions H, A and G may serve as equilibrium criteria for the system under consideration.

In section 6.2 some additional basic concepts and relationships will be introduced for applications concerning radiation.

CHAPTER 3. ENERGY TRANSFORMATION, EXERGY AND RELATED CONCEPTS

3.1. Introduction

The interest in this report is focused on the usefulness of energy rather than on energy itself. Of particular interest is therefore the potential opportunity for energy from one source or from a system of sources to be transformed into *mechanical work*, which represents the highest utility form of energy since, in principle, in its turn it can be transformed into energy of any particular kind.

This chapter will focus its attention on the potential of a system to provide mechanical work. This potential will be called the *exergy potential* of the system in question, exergy being a term proposed by Rant 1956, but having a number of related forerunners as well as followers (*free energy*, *available energy*, *availability*, *essergy*, *ideal work*, *maximum work*, *thermodynamic potential etc*). By the *exergy power potential* we mean the similar rate per unit.

Before giving a brief overview over interpretations of this concept which naturally has gained much attention since the early days of the steam engine, we shall examine three typical energy transformation devices from a theoretical point of view, viz the *heat engine*, the *heat pump* and a *piston-cylinder device*. In a final section we include some examples of estimated exergy efficiencies as described in literature by different authors.

3.2. Three basic energy transformation devices

Every textbook on thermodynamics refers to the *heat engine* as an instructive and typical piece of equipment for describing the transformation of heat into mechanical work. The engine, connected to a hot heat source of temperature T (usually an infinite supply) and to a cold heat sink of temperature T_0 (assumed infinite and interpreted as an "environment") operates in cycles. At the end

of each cycle the state of the engine itself is the same as at the beginning of each cycle. Therefore there is no net change in internal energy, nor in entropy, nor in any other property of the engine. The only changes in state that occur are therefore in the source and in the sink outside of the engine itself. The two constraints limiting the amount of work the engine may deliver are the first and second laws, i e the energy principle and the entropy principle. Figure 3.1 illustrates the energy flows involved.

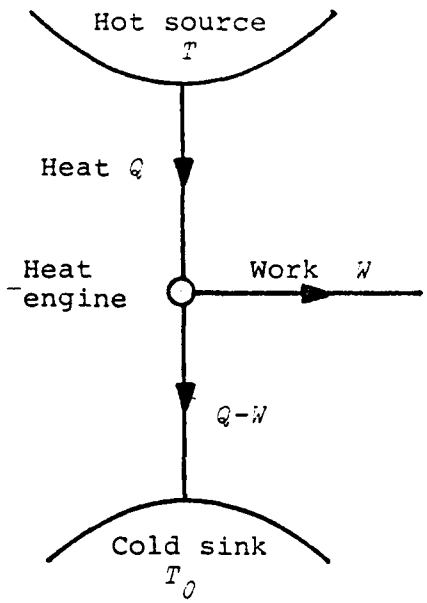

Figure 3.1. A schematic heat engine

According to the energy principle, if during some time interval, Q is delivered from the source and W from the engine, then the difference $Q-W$ must be delivered to the sink. That this difference is positive is ascertained by the second law. According to (2.20) the entropy flow from the source is QT^{-1} and the entropy flow to the sink $(Q-W)T_0^{-1}$. The total entropy generation is therefore:

$$\hat{S} = \frac{Q-W}{T_0} - \frac{Q}{T} \geq 0 \tag{3.1}$$

according to the second law. Hence $Q-W$ must be positive and the entropy principle limits the work output to:

$$W = Q(1-T_0T^{-1}) - T_0\hat{S} \leq Q(1-T_0T^{-1}) \tag{3.2}$$

The right-hand member gives the ideally maximum work output when $\hat{S} = 0$, i e for a reversible process, and this level gives us a preliminary definition of the exergy potential E of the source (when the sink properties are specified):

$$E = Q(1-T_0T^{-1}) \tag{3.3}$$

Eq (3.2) is often interpreted as a "transformation" of a fraction less than or equal to $(1-T_0T^{-1})$ of the heat delivery Q into the work output W, despite the fact that there is not necessarily any such identity between W and $Q(1-T_0T^{-1})$.

The *heat efficiency* or *first law efficiency* η relates the actual work output to the delivered heat:

$$\eta = \frac{W}{Q} = (1-T_0T^{-1}) - \frac{T_0\hat{S}}{Q} \leq (1-T_0T^{-1}) = \eta^* \tag{3.4}$$

Implicitly behind the usage of this ratio is an economic idea, viz that useful work obtained should be related to heat delivered, which is what is paid for. From a theoretical point of view, however, there is no reason that the ratio of W to Q is more significant than the ratio of W to the flow $(Q-W)$ (or to any other flow). Since the hot source when using η is viewed differently from the cold sink, this efficiency measure violates our symmetry principle (cf section 1.3). The right-hand member in (3.4) is the *Carnot efficiency* η^* which gives the upper theoretical limit of the heat efficiency (only attainable for an ideal reversible engine). Since T_0 always is finite, even the ideal case will never yield an efficiency of unity, which the common usage of this term would suggest.

The fact that, at the best, there is a heat delivery of QT_0/T to the environment is also often misinterpreted as being a waste, whereas it in fact is an inevitable flow to compensate for the entropy reduction in the source if any work is to be produced at all. The "real" waste is rather the term $T_0\hat{S}$ *(lost work)* in (3.2), which accounts for the amount of work not obtained due to irreversibilities, i e to the net entropy production $\hat{S}$, assuming the heat inflow to remain at Q also if $\hat{S}$ were zero-valued. A theoretically more sound efficiency measure is therefore the *exergy efficiency* or *second law efficiency* defined by:

$$\xi = \frac{W}{E} = 1 - \frac{\hat{S}}{Q(T_0^{-1}-T^{-1})} \leq 1 \tag{3.5}$$

Also this ratio violates the symmetry principle indirectly. This is due to exergy E having been preliminarily defined in (3.3) by using the heat inflow to start with, i e attaching a special significance to the hot source. If we instead had departed from the heat outflow writing this flow $Q' = Q-W$, the work output W' and the exergy E' would be given by:

$$W' = Q'(TT_0^{-1}-1) - T\hat{S} \tag{3.6}$$

$$E' = Q'(TT_0^{-1}-1) \tag{3.7}$$

and the exergy efficiency by:

$$\xi' = \frac{W'}{E'} = 1 - \frac{\hat{S}}{Q'(T_0^{-1}-T^{-1})} \tag{3.8}$$

If we are considering the same engine and process, we must have $W = W'$. The obviously E' and E will differ in general and will coincide if and only if:

$$W = Q(1-T_0T^{-1}) = Q'(TT_0^{-1}-1) \tag{3.9}$$

i e either for an ideally reversible engine, in which case we would

have $\hat{S}=0$ and $\xi=\xi'=1$ or $W=0$. If the two exergy efficiencies are to coincide, we would also require either $\hat{S}=0$ or $W=0$ $(Q=Q')$. This problem of ambiguity, however, can be resolved by considering the *flow capacities* (upper limits) of the source and sink to be properties from which exergy is to be defined, rather than from the actual flows. This is analyzed in greater detail in section 4.5. If Q and Q' are reinterpreted as the maximal available in- and outflows respectively, then the capacity limiting first, will determine whether exergy should be given by (3.3) or by (3.7). Exergy will then be a symmetric function of the source and sink properties, and therefore be consistent with our symmetry principle. Then ξ or ξ', whichever appropriate, will also be in agreement with this principle.

The discussion above also shows that what is meant by "lost work" depends on which flow capacity is the effective limit. When the hot capacity limits, then this amount is $T_0\hat{S}$, and in the opposite case it is $T\hat{S}$. In the latter case it may be suitable to interpret the heat source as the "environment" and lost work then will always be $T_{environment}\hat{S}$.

Also the relationship between heat efficiency η and second law efficiency ξ will depend on which flow that is most strongly limited. By combing (3.4), (3.5) and (3.8) we obtain:

$$\xi = \begin{cases} \eta\eta^{*-1} & \textit{(inflow limited)} \\ \dfrac{\eta\ (1-\eta^*)}{\eta^*(1-\eta\ )} & \textit{(outflow limited)} \end{cases} \tag{3.10}$$

For given values of η^* and $\eta \leq \eta^*$, the limited outflow case will always give the lower of the two ξ-values. This is in agreement with $T_0\hat{S} \leq T\hat{S}$, i e it will give greater waste assuming everything else to be equal. When $\eta=\eta^*$ in either case we always have $\xi = 1$.

As a second schematic energy transformation device we consider the *heat pump* having the objective to provide a heat flow from a cold to a hot body. Figure 3.2 illustrates the flows involved.

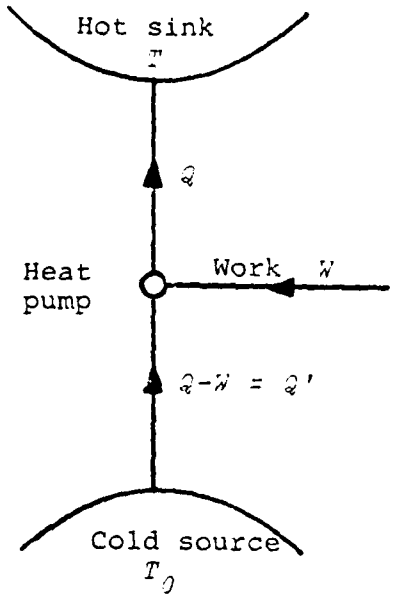

Figure 3.2. The heat pump

A heat pump may be regarded as an "inverted" heat engine. Practical examples in everyday use are refridgerators and airconditioning equipment. The two laws governing the theoretical limitations of the heat pump, are the energy principle and the entropy principle. If the heat flow delivered to the hot sink is Q and the heat inflow from a cold source is Q' we must have:

$$\hat{S} = QT^{-1} - Q'T_0^{-1} \geq 0 \tag{3.11}$$

which shows that $Q \geq Q'$, meaning that there must be an additional incoming energy flow. Let us assume this flow is mechanical work W applied to the pump as illustrated in figure 3.2. The second law then requires:

$$\hat{S} = QT^{-1} - (Q-W)\, T_0^{-1} \geq 0 \tag{3.12}$$

where $\hat{S}$ is the entropy generation. The amount of heat delivered to the hot sink is therefore limited by:

$$Q = \frac{W - T_0\hat{S}}{1 - T_0 T^{-1}} \leq \frac{W}{1 - T_0 T^{-1}} \tag{3.13}$$

and the flow of heat from the cold source by: (3.14)

$$Q' = \frac{W - T\hat{S}}{T T_0^{-1} - 1} \leq \frac{W}{T T_0^{-1} - 1}$$

The conventional way of describing the efficiency of a heat pump depends on its two basic forms of usage. When it has the purpose to keep an object cool (such as the interior of a refridgerator) a *cooling ratio (coefficient of performance)* ω is defined by:

$$\omega = \frac{Q'}{W} = \frac{1 - T\hat{S}W^{-1}}{T T_0^{-1} - 1} \leq \frac{1}{T T_0^{-1} - 1} = \omega^* \tag{3.15}$$

where ω^* is the theoretical maximum of ω. When it is used for heating purposes, a *heating ratio* σ is defined by:

$$\sigma = \frac{Q}{W} = \frac{1 - T_0\hat{S}W^{-1}}{1 - T_0 T^{-1}} \leq \frac{1}{1 - T_0 T^{-1}} = \sigma^* \tag{3.16}$$

where σ^* similarly is the theoretical maximum of σ. It is clear that neither of these two measures of performance comply with the symmetry principle. However, they both relate the effect described (heat withdrawal or heat supply) to the work input (which is what is paid for) and they therefore rest on an implicit economic principle just like η for the heat engine. It is also clear that ω^* and σ^* being functions of the two temperatures are easily interpreted as $\omega^* = (\eta^{*-1} - 1)$ and $\sigma^* = \eta^{*-1}$, where η^* is the Carnot efficiency for an engine if it were connected to the same source and sink (and used for the opposite purpose).

On examining (3.15) and (3.16) we find that the terms $T\hat{S}$ in the cooling case and $T_0\hat{S}$ in the heating case correspond to the additional work input necessary to compensate for the entropy production $\hat{S}$.

Also for the heat pump we may define an *exergy efficiency* ξ by taking the ratio of the exergy ouput to the exergy input. If the hot sink limits the capacity most strongly, T_0 will be interpreted as the environmental (referential) temperature. In such a case the total exergy input will be $W+Q'(1-T_0T_0^{-1}) = W$, the exergy output $Q(1-T_0T^{-1})$ and the exergy efficiency:

$$\xi = \frac{Q(1-T_0T^{-1})}{W} = \sigma o^{*-1} \leq 1 \qquad (3.17)$$

In the opposite case when T is the referential temperature, the interpretation is slightly more involved. The exergy input is W with no additional term since $Q'(1-TT_0^{-1})$ is negative and is now interpreted as an exergy output (to the cold source), and we have the output zero to the hot sink, since $Q(1-TT^{-1}) = 0$. The exergy efficiency is therefore the ratio between absolute values of exergy ouput and input:

$$\xi = \frac{Q'(TT_0^{-1}-1)}{W} = \omega\omega^{*-1} \leq 1 \qquad (3.18)$$

The withdrawal of heat from the cold source in the latter case thus corresponds to a building up of exergy (i e a potential that could produce work if a heat engine were to be applied). In the practical case of the refridgerator, the heat pumped out is a compensation for the heat leaking into the cold area, which in itself corresponds to a loss of exergy, i e a diminishing hypothetical opportunity to extract work from the system. The exergy output of the heat pump restores this theoretical capacity of the system and the exergy input must cover the ouput plus the exergy losses from the operation of the pump $T\hat{S}$, i e $W = Q'(TT_0^{-1}-1) + T\hat{S}$, which already has been stated in (3.14), but in a different manner.

Heat engines and heat pumps will be used extensively in the remaining chapters for instructive purposes since these devices offer simple descriptions of the maximum work output or minimum work input as limited by the second law.

As a third device to be used for demonstrative purposes we choose a *piston-cylinder apparatus* as illustrated in figure 3.3. The cylinder contains an ideal gas which can expand or contract, performing work on the environment or receiving work from the environment.

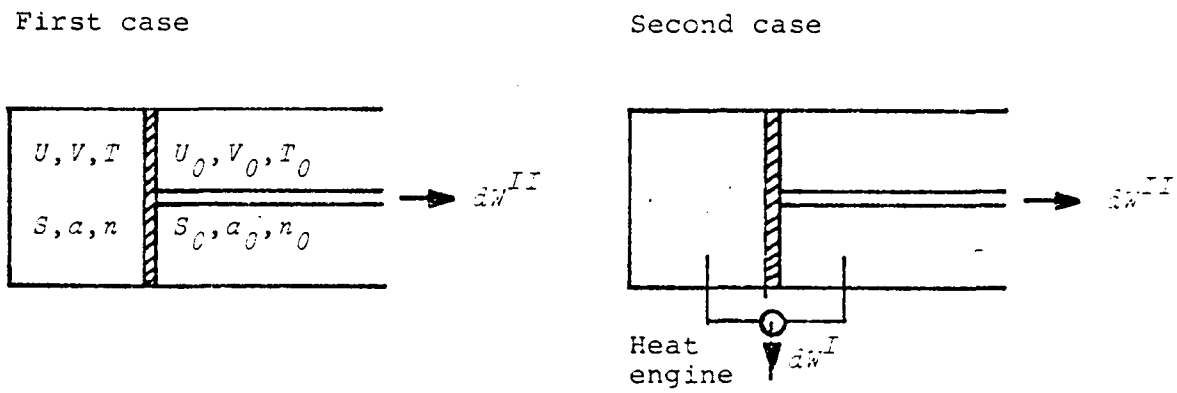

Figure 3.3. A piston-cylinder device

We assume the cylinder and piston to be perfect insulators and that the environment is infinite, meaning that a displacement of the piston will not affect properties of the environment to any noticable extent. Relevant properties of the contained gas are internal energy U, volume V, molar content n, temperature T, entropy S and pressure a, denotations of the similar properties of the environment having subscripts zero. The heat capacity at constant volume of the gas is assumed constant and written c.

We first study the case when work is extracted by means of the

piston only, i e from a single work mode. In general, this would lead to a final state in which the temperature of the contained gas would be different from that of its environment. As a second step we also include the possibility of extracting work from a heat engine applied to the cylinder taking care of the opportunity to equalize this temperature difference while delivering work.

Applying Gibbs' fundamental equation (2.13) for the contained gas on the one hand, and for the environment, on the other, gives us:

$$T_0 dS_0 = dU_0 + a_0 dV_0 = T_0 d\hat{S}_0 + dQ_0 \tag{3.19}$$

$$TdS = dU + adV = Td\hat{S} + dQ \tag{3.20}$$

where dQ_0 is heat absorbed by environment, dQ heat absorbed by gas, and where dS_0 is total change in entropy of environment of which $d\hat{S}_0 \geq 0$ is the amount produced, and similar for dS and $d\hat{S} \geq 0$ for the gas contained. The entropy not produced is exchanged, which yields:

$$dS_0 + dS = d\hat{S}_0 + d\hat{S} \geq 0 \tag{3.21}$$

We also have the following balances:

$$dU_0 + dU + dW^I + dW^{II} = 0 \tag{3.22}$$

$$dV_0 + dV = 0 \tag{3.23}$$

where dW^I is the work differential from the heat engine, which is zero in our first case, and dW^{II} the work differential obtained by means of the cylinder expansion. On combining the last five equations we obtain:

$$dW^I + dW^{II} = -dU - a_0 dV + T_0 dS - T_0(d\hat{S}_0 + d\hat{S}) \tag{3.24}$$

and also:

$$dW^{I} + dW^{II} = (a-a_0)\,dV - (T-T_0)\,dS - T_0(d\hat{S}_0 + d\hat{S}) \qquad (3.25)$$

It is clear from these relationships that the total work differential will be maximized, as usual, when the process takes place reversibly, i e when $d\hat{S}_0 = d\hat{S} = 0$. The remaining differential is therefore interpreted as the differential of the exergy potential of the contained gas. This differential is studied in greater detail in section 3.4 below.

In our first case with an insulated gas, the process is adiabatic with $dQ = 0$, i e:

$$dS = d\hat{S} \qquad (3.26)$$

which means that the only change in entropy of the gas is the amount caused by irreversibilities. This gives us the work differential:

$$dW^{II} = (a-a_0)\,dV - T\,d\hat{S} - T_0\,d\hat{S}_0 \qquad (3.27)$$

Using superscripts 0 to denote initial values, asterisks to denote final values and using the entropy state eguation (2.26) and universal gas law (2.22), we may write:

$$W^{II} = \int_{V^0}^{V^*} \left(\frac{RnT}{V} - a_0\right) dV - \int_{T^0}^{T^*} c\,dT - \int_{V^0}^{V^*} RnT\,\frac{dV}{V} - T_0\hat{S}_0 \qquad (3.28)$$

where $\hat{S}_0$ is the total entropy production in the environment during the entire process. Also we know for the final state:

$$\hat{S} = c\,\log\frac{T^*}{T^0} + Rn\,\log\frac{V^*}{V^0} \qquad (3.29)$$

where $\hat{S}$ is the total entropy generated in the gas and:

$$a_0 = a^* = RnT^*/V^* \tag{3.30}$$

Evaluating (3.28) thus yields:

$$W^{II}_{max} = c(T^0-T^*) - a_0(V^*-V^0) - T_0\hat{S}_0 = \tag{3.31}$$
$$= a^0V^0\left(\frac{a_0}{a^0} + \frac{c}{Rn} - \left(1+\frac{c}{Rn}\right)\left(\frac{a_0}{a^0}\right)^{\frac{Rn}{c+Rn}} e^{\frac{\hat{S}}{c+Rn}}\right) - T_0\hat{S}_0$$

which decreases in $\hat{S}$ as well as in $\hat{S}_0$ and the final temperature will be:

$$T^* = T^0\left(\frac{a_0}{a^0}\right)^{\frac{Rn}{c+Rn}} e^{\frac{\hat{S}}{c+Rn}} \tag{3.32}$$

which increases in $\hat{S}$ and in general would be different from that of the environment T_0. Therefore also the final volume V^* is an increasing function of $\hat{S}$. If no other work mode than pressure work were available, we would thus have the exergy potential:

$$E^{II} = a^0V^0\left(\frac{a_0}{a^0} + \frac{c}{Rn} - \left(1+\frac{c}{Rn}\right)\left(\frac{a_0}{a^0}\right)^{\frac{Rn}{c+Rn}}\right) \tag{3.33}$$

Using the universal gas law either a^0, or V^0, can be exchanged for T^0 giving us alternative expressions for W^{II}_{max} and E^{II}.

We now look into the non-adiabatic second case in which work also can be extracted by means of a heat engine. In this case the equations (3.19) - (3.25) still hold, whereas (3.26) now is replaced by:

$$TdS = T\hat{dS} + dQ \tag{3.34}$$

and the similar equation for the environment is:

$$T_0 dS_0 = T_0 \hat{dS}_0 + dQ_0 \tag{3.35}$$

Also we have:

$$dW^I = -dQ - dQ_0 = T(\hat{dS} - dS) + T_0(\hat{dS}_0 - \hat{dS}) = (T - T_0)(\hat{dS} - dS) \tag{3.36}$$

since $(dS - \hat{dS})$ is the mutual amount of entropy exchanged.

Writing $dW = dW^I + dW^{II}$ and using dS instead of $\hat{dS}$ in the entropy state equation, we evaluate (3.25):

$$W = \int_{V^0}^{V^*} (a - a_0)\, dV - \int_{T^0}^{T^*} c(T - T_0)\, \frac{dT}{T} - \int_{V^0}^{V^*} Rn(T - T_0)\, \frac{dV}{V} - T_0(\hat{S}_0 + \hat{S}) \tag{3.37}$$

Applying the universal gas law and using molar volumes $\bar{v}^0 = V^0 n^{-1}$ etc, we obtain:

$$W_{max} = cT_0 \left(\frac{T^0}{T_0} - 1 - \log \frac{T^0}{T_0} \right) + RnT_0 \left(\frac{v^0}{v_0} - 1 - \log \frac{v^0}{v_0} \right) - T_0(\hat{S} + \hat{S}_0) \tag{3.38}$$

where we have chosen initial temperatures and volumes as arguments in this formulation. Using the universal gas law would provide us with other alternatives expressions. Clearly W_{max} decreases both in $\hat{S}$ and $\hat{S}_0$ and the exergy potential of the gas is therefore:

$$E = cT_0 \left(\frac{T^0}{T_0} - 1 - \log \frac{T^0}{T_0} \right) + RnT_0 \left(\frac{v^0}{v_0} - 1 - \log \frac{v^0}{v_0} \right) =$$

$$= cT_0 g(T^0 T_0^{-1}) + RnT_0 G(v^0 v_0^{-1}) \tag{3.39}$$

where $g(x) = x - 1 - \log x$ is the *exergy function*. This expression is given in the references such as in [Eriksson, et al, 1976, p I.1], cf also figure 4.2.

It should be noted that we have not applied the symmetry principle above, since an infinite environment has been assumed throughout.

Also for the piston-cylinder device we may define an exergy efficiency:

$$\xi = \frac{W_{max}}{E} = 1 - \frac{T_0(\hat{S}+\hat{S}_0)}{E} \tag{3.40}$$

which due to the infinite environment also will be an asymmetrical measure of performance.

3.3 Exergy as a physical norm

From the preceding sections it is clear that a number of characteristics need to be specified for a given energy source in order to determine what energy transformation opportunities that exist. For simple sources, temperature may be the dominant state variable determining together with the ambient temperature how much work that can be extracted in an ideal case in comparison with the amount of heat that is taken from the source. This was shown in (3.2). Temperature is therefore an important variable to characterize the quality of an energy source.

Consider a heat engine operating between the temperatures T_1 (source) and T_0 (environment) combined with a heat pump operating between the temperatures T_2 (output) and T_0 as illustrated in figure 3.4.

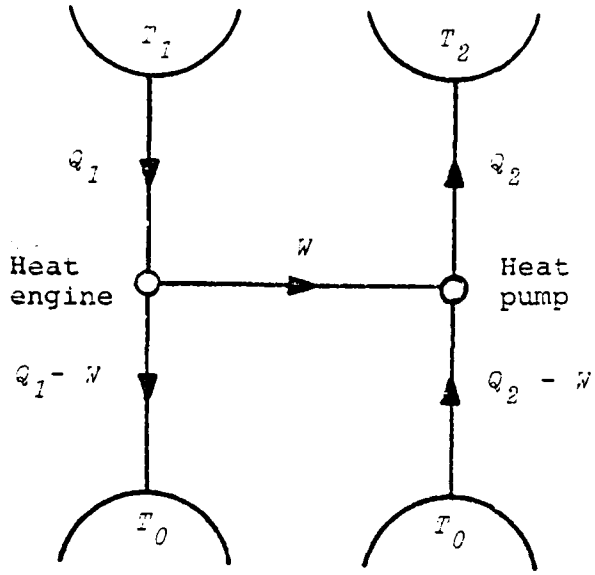

Figure 3.4 Combination of a heat engine and a heat pump

If $\hat{S}_1$ is the entropy production of the heat engine and $\hat{S}_2$ that of the heat pump, we obtain the following relationship between heat delivered into the system Q_1, and heat extracted Q_2:

$$Q_2(1-T_0T_2^{-1}) = Q_1(1-T_0T_1^{-1}) - T_0(\hat{S}_1+\hat{S}_2) \tag{3.41}$$

This relationship may be interpreted as an exergy balance, the exergy input being $Q_1(1-T_0T_1^{-1})$, the exergy output $Q_2(1-T_0T_2^{-1})$ and $T_0(\hat{S}_1+\hat{S}_2)$ destroyed exergy (lost work) in the transformation process. For an ideal pair of engine and pump $\hat{S}_1=\hat{S}_2=0$, we obtain the maximum heat ouput in relation to the heat input:

$$\frac{Q_2}{Q_1} = \frac{1-T_0T_1^{-1}}{1-T_0T_2^{-1}} \tag{3.42}$$

It is evident that the temperature dependent factors $(1-T_0T_1^{-1})$ and $(1-T_0T_2^{-1})$ translate the input heat amount of a certain quality (temperature) into the output amount of a different quality. Thus exergy serves as a *physical norm* for comparing energy of different qualities.

Although exergy as such is not a necessary concept underlying all economic models to be developed in chapters 7 and 8, the results derived there are conveniently interpreted in terms of exergy. Therefore we shall devote a great deal of attention to this concept in the following chapters, since it will be shown that the *exergy price* will serve as an *economic norm* for determining the value of energy in different qualities.

3.4 The concept of exergy

The definition of *exergy* as given by Rant [1956] determines this quantity as the overall maximum work ouput (*technische Arbeitsfähigkeit*) that can be obtained from a body with a given initial state, i e the body's theoretical ability to produce work. Baehr [1965] stated the following explicit definition:

> "Die Exergie ist der in jede andere Energieform umwandelbare Teil der Energie;..."

As mentioned, the general expressions in literature describing the exergy potential of a body (a "system") appear to be limited to cases in whichare presupposed the existence of an infinite environment having given intensive properties such as temperature, pressure and chemical potentials, or alternatively, the treatments

presuppose the existence of given reference values of such properties, even if such an environment would not be considered explicitly. The assumption postulating a given reference state has been used as an argument for pointing out limitations in the use of the exergy concept or for stating the need for agreeing upon universal standards as to what reference levels that should be adopted commonly [Eriksson, et al, 1976]. Assuming the existence of an infinite environment also violates the symmetry principle given in section 1.3.

Also the mathematical expressions for exergy in literature appear to be limited to cases in which there is only one body (one energy source) in existence, this body embedded within the infinite environment, (with the exception of [Evans, 1969, p 101]).

In the chapters following we shall show that it indeed is possible to derive expressions for the exergy potential of a system of sources, neither of which need to be of infinite extension. This means, that applying the symmetry principle, it is quite feasible to define exergy without alluding to a reference set of intensive states, in fact such reference states will emanate from the analysis as a product of the given characteristics of the bodies of the system treated. For at system of thermal sources (treated in chapter 4), for instance, it may be shown that the reference temperature can be interpreted as a geometrical mean of certain given initial temperatures. As shown in section 5.5 this item cannot be taken care of in a circumventive way simply by exchanging the referential set of characteristics by a similar equilibrium set. In any case, we may immediately object to such an approach, due to the fact that the equilibrium properties are determined by initial values and therefore cannot be chosen arbitrarily for systems having only finite energy sources.

In this section we present a main outline of the exergy concept

as pertaining to (i) a single given body (source) which is coupled to (ii) a given infinite environment following [Eriksson, et al, 1978]. The body has the internal energy U, pressure a, volume V, temperature T, entropy S, chemical potentials $\mu_1, \mu_2, \ldots, \mu_M$, and molar contents $n_1, n_2, \ldots n_M$ and the corresponding properties of the environment are denoted by the same symbols having the subscript 0.

The Gibbs fundamental equation of the body on the one hand, and of the environment, on the other, may be written:

$$TdS = dU + adV - \sum_{i=1}^{M} \mu_i \, dn_i \tag{3.43}$$

$$T_0 dS_0 = dU_0 + a_0 dV_0 - \sum_{i=1}^{M} \mu_{i0} \, dn_{i0} \tag{3.44}$$

From the interaction between the body and its environment, a work diffential dW may be extracted. Since no interaction takes place with any third object (apart from taking care of dW), we have $dV_0 = -dV$ and the following balances:

$$dS + dS_0 = d\hat{S} + d\hat{S}_0 \tag{3.45}$$

$$dU + dU_0 + dW = 0 \tag{3.46}$$

$$dn_i + dn_{i0} = 0, \qquad i = 1,2,\ldots, M \tag{3.47}$$

where $d\hat{S}$, $d\hat{S}_0 \geq 0$ are the amounts of entropy produced by irreversibilities in the process. On combining these five equations, we may write:

$$dW = -dU - a_0 dV + T_0 dS + \sum_{i=1}^{M} \mu_{i0} dn_i - T_0 (d\hat{S} + d\hat{S}_0) \tag{3.48}$$

This equation shows the extractible amount of work (in differential form) as a function of changes in the extensive properties of the object dU, dV, dS, dn_i, the constant intensive properties of the environment T_0, a_0, μ_{i0}, and the total entropy change due to irreversibilities $(d\hat{S}_0+d\hat{S})$. Clearly dW is maximized when $d\hat{S}+d\hat{S}_0=0$, by which we can interpret the remaining differential as the decrease in exergy dE of the body:

$$dE = dU + a_0 dV - T_0 dS - \sum_{i=1}^{M} \mu_{i0} dn_i \tag{3.49}$$

Integrating (3.48) yields:

$$W = U^0 - U^* - a_0(V^*-V^0) + T_0(S^*-S^0) + \sum_{i=1}^{M} \mu_{i0}(n_i^* - n_i^0) -$$

$$- T_0(\hat{S}_0+\hat{S}) \tag{3.50}$$

where superscripts 0 refer to initial states and asterisks to final states, $\hat{S}_0$ and $\hat{S}$ being the total entropy production of the process. Since work can be extracted up to the point that the intensive properties of the body take on the values of the environment, at the final state maximizing W we have:

$$U = - a_0 V + T_0 S + \sum_{i=1}^{M} \mu_{i0} n_i^* \tag{3.51}$$

where (2.87) has been used. Inserted into (3.50) this yields:

$$W_{max} = U + a_0 V - T_0 S - \sum_{i=1}^{M} \mu_{i0} n_i - T_0(\hat{S}_0+\hat{S}) \tag{3.52}$$

and:

$$E = U + a_0 V - T_0 S - \sum_{i=1}^{M} \mu_{i0} n_i \tag{3.53}$$

where entities lacking superscripts now refer to their initial values. This is a fairly general expression for the exergy content of a body, when given its initial extensive properties U, V, S, n_i, and the constant intensive properties α_0, T_0, μ_{i0} of the environment. Also by using (2.87) for the initial state, we obtain the alternative expression:

$$E = (\alpha_0-\alpha)V + (T-T_0)S + \sum_{i=1}^{M}(\mu_i-\mu_{i0})n_i \qquad (3.54)$$

The way in which E is determined by property variables in (3.53) or (3.54) shows that E may be interpreted as a property of the body, when assuming given referential values α_0, T_0 and μ_{i0}. For a few special cases the differential in (3.49) may be interpreted as a differential change in certain previously derived properties [Evans, 1969, p 8 , Eriksson, et al, 1978, p 8]:

<u>Enthalpy</u>

$$dE = dU + \alpha dV = dH \quad (\alpha=\alpha_0, dS=0, dn_i=0) \qquad (3.55)$$

<u>Gibbs free enthalpy</u>

$$dE = dU + \alpha dV - TdS = dG \quad (\alpha=\alpha_0, T=T_0, dn_i=0) \qquad (3.56)$$

<u>Helmholz free energy</u>

$$dE = dU - TdS = dA \quad (dV=0, T_0=T, dn_i=0) \qquad (3.57)$$

Also when heat of the amount $-dQ$ is extracted reversibly from the body, we have $dS = dQ/T$ and $dU = dQ$, which for a constant volume, constant composition process yields:

$$dE = dQ\,(1-T_0T^{-1}) \quad (dV=0,\ dn_i=0) \qquad (3.58)$$

i e the Carnot formula in differential form (3.3).

The maximum amount of work that can be extracted from a given body has gained interest for a long time. Apart from the writings of Gibbs and von Helmholz we may note Darrieus [1930] who used the function $U-T_0S$ called "available energy" as applied to steam turbines. This function is the integral form of (3.57) when we are dealing with a constant volume, constant temperature, constant composition source. Keenan [1932] introduced the term "availability" for the function $U+a_0V-T_0S$ giving the maximum amount of work that could be extracted from a steady stream of fluid. He later applied the same function to combustion and flow processes [1951]. The term "available energy" had previously been used by Lord Kelvin and by Gibbs [(1873), 1906, p 52n] and others (cf [Haywood, 1974, p 265]). The amount of lost work due to irreversibilities (entropy creation) was first derived by Stodola [1898]. Evans [1969] generalized the exergy formula (3.53) by including the chemical potential term (the "diffusion term") and called his function "essergy". This term was already present in the early work of Gibbs [(1875-78), 1906, p 77, eq (54)] and was also later introduced independently of Evans by Berg [1974]. Since then there has been some discussion as to the limitations of the terms availability, exergy and essergy. Haywood [op cit] presents an excellent overview of the concepts of availability and irreversibility and adopts the view that the word "exergy" should be limited in usage to the function $(U+a_0V-T_0S)$. Berg [op cit] uses the term "thermodynamic availability", which Ahearn [1975] suggests should be replaced by "exergy" and according to Tribus [1975] by "essergy . Berry [1972] uses the expression "thermodynamic potential" for the function $U-TS$ and interprets this as the scarce resource, where U is "energy" (i e including other energy than internal energy only).

For our purposes, the definition given by Baehr is completely general and the term "exergy" therefore is preferred. It might also be noted that despite the high generality of E as given by (3.53) it still can be generalized further, e g by departing from a more general version of Gibbs' fundamental equation

including terms for the flow of electricity and the occurence of a chemical reaction [Yourgrau, et al, 1966, p 14]:

$$TdS = dU + pdV - \sum_{i=1}^{M} \mu_i dn_i - \phi dq + \nu dz \qquad (3.59)$$

where ϕ is the electric potential, q the electric charge, ν the affinity of the chemical reaction and z the extent of this reaction. Eq (3.59) will be applied in section 5.4.

This will provide us with additional terms in the exergy function. A different line of generalization is commenced in the next chapter, i e to study the exergy potential of a system of several finite sources with no initial reference to a given environment. In chapter 5 this approach is followed up in further generalizations.

3.5. Examples illustrating the exergy concept applied to energy transformation processes in practice

In recent years there appears to have been a growing interest to analyze exergy flows pertaining to various processes in practical use rather than only energy/heat flows. Also the Swedish nationwide consumption of exergy from different sources and for different purposes has been given attention [Eriksson, et al, 1975, 1976]. In this section we give references to a few examples of such process analyses described in literature.

Simple chemical processes such as the burning of coal, or rather, the oxidization of carbon, the chemical reactions of which are:

$$C + \tfrac{1}{2}O_2 \rightarrow CO \qquad (3.60)$$

$$C + O_2 \rightarrow CO_2 \qquad (3.61)$$

yielding carbon monixide or dioxide, or the burning of lime:

$$CaCO_3 \rightarrow CaO + CO_2 \qquad (3.62)$$

are found in Grassman [1961], Baehr [1962] and Rant [1969].

The analyses of such processes have shown that the exergy potential of the fuels in question may differ as little as a few percent from their upper heating levels, i e the difference between the sum of the input molar enthalpies of the reactants and the similar sum of the output molar enthalpies of the products. In a fuel cell, an isothermal, isobaric oxidization of hydrogen would permit all chemical energy to be transformed into work in the theoretical reversible limit.

Various processes involving steam have been given attention in, for instance, [Rögener, 1961], in which the exergetic losses at different stages of a system of coupled turbines are analyzed. Rant [1961] examines the preheating of air and in a later article [1969] gives detailed descriptions of the exergy flows involved in the Solvay process for the production of sodium in a Klinker-oven process and in a beat sugar factory. Louw [1975] gives an overview of processes involved in a Rankine steam power plant, in an open-gas turbine plant, in a Linde liquid-air plant and in a refridgeration plant based on examples previously given in literature. Berg [1974] presents a "second-law analysis" of the ammonia-absorption cycle for a refridgeration machine. Gašparović [1961] provides an overview and a bibliography covering the period 1889-1961 (mainly papers in the German language) concerning a variety of applications.

The exergy efficiency (second law efficiency) of a number of processes in practical use have been estimated. The list given in table 3.1 is an aggregation from [Louw, 1975, Rant,1969, Keenan, 1932, Berg, 1974].

Process	Exergy efficiency ξ
Open hearth furnace	.45
Modern boiler	.72
Otto engine	.68
Diesel engine	.72
Gas turbine	.56
Rankine steam power plant	.40
Open gas turbine plant	.26
Steam turbine (resuperheated, feedwater heated)	.82
Power plant (turbine-heater-condenser)	.73
Adiabatic burning of coal (with regenerative preheating of air)	.68 - .83
Kiln operations, lime burner	.25 - .63
Vacuum furnaces	.25
Refridgeration plant	.28
Liquid air plant	.15
Air separation	.13
Sodium process	.13
Watergas production	.67
Cement production	.31
Sugar plant	.40
Paper mill	.10
Thermoelectric generator	.35 - .50
Thermionic generator	.10 - .30
Magnetohydrodynamic generator	.60
Fuel cells	.90
Radiation cell	.10
Domestic space heating (electrical)	.03
Domestic space heating (gas, oil)	.07
Water electically heated to boiling point	.12

Table 3.1. Various estimates of exergy efficiencies taken from literature

CHAPTER 4. EXERGY POTENTIAL OF THERMAL SYSTEMS

4.1. Introduction

In this chapter we derive expressions for the *exergy potential* of a system of heat sources in a few different cases. These sources will be characterized only by their temperatures and their potential to produce or receive heat. Other source properties such as pressure etc are not considered. A system of sources, the state of which is fully determined by specifying all temperatures, we call a *thermal system*. Some sources may act as sources proper and others as sinks, depending on the circumstance. We adopt the sign convention that a heat flow Q_i is positive if it is directed towards source i and negative when it flows in the reverse direction.

In a first model is treated the case of a system of $(N+1)$ finite sources, each characterized by a heat capacity and an initial temperature. Each heat capacity depends at most on the prevalent temperature of the source itself. By letting the heat capacity of one of the sources increase beyond all bounds, we obtain our second case, i e the case of N finite sources and one infinite source, and as a third case we analyse a system of $(N+1)$ infinite sources, each of which has some limitation as to its capacity to leave or receive heat flows. The economic counterpart of this treatment is given in sections 7.2. and 7.4.

4.2. Exergy potential of a system of finite sources

We consider the existence of a system of $(N+1)$ heat sources having temperatures $T_0, T_1, \ldots, T_N$ at some point in time t, and given initial temperatures T_i^0, $i=0,1,\ldots,N$, at $t=0$. Between each pair of sources a heat engine is inserted. Altogether there are $N(N-1)/2$ such engines. Engine (i,j) is coupled to sources i and j. The sources are characterized by their given heat capacities (at constant volume) $c_0(T_0), c_1(T_1), \ldots, c_N(T_N)$. By convention, we adopt the condition that $i>j$.

When engine (i,j) is in use, during a short time interval it produces the work dW_{ij} and generates at least a minimal *entropy* of $d\hat{S}_{ij}$ this quantity being a given characteristic of the engine. Heat is taken from one of the sources and delivered to the other. The quantity dQ_{ij} is amount of heat given to source i, if positive, and taken from source i, if negative, and dQ_{ji} heat given to source j if positive, and taken from source j, if negative. Figure 4.1 illustrates the flows pertaining to engine (i,j).

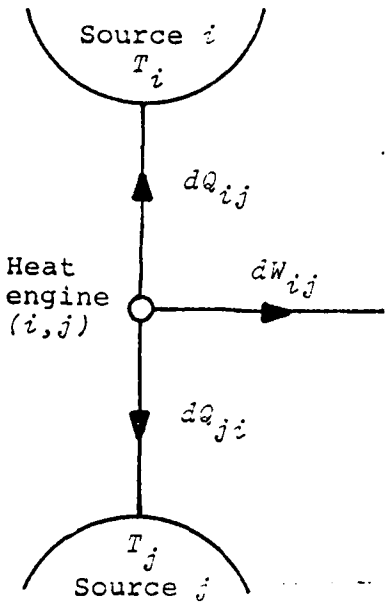

Figure 4.1. Energy flows related to heat engine (i,j)

Applying the first law, the work produced by engine (i,j) is given by:

$$dW_{ij} = -dQ_{ij} - dQ_{ji} \qquad j<i \tag{4.1}$$

and the total work dW from all engines may therefore be written:

$$dW = \sum_{i=0}^{N} \sum_{j=0}^{N} dW_{ij} = -\sum_{i=0}^{N} \sum_{j=0}^{i} (dQ_{ij}+dQ_{ji}) = -\sum_{i=0}^{N} \sum_{j=0}^{N} dQ_{ij} \qquad (4.2)$$

where we have adopted the conventions that the undefined quantities dW_{ii} and dQ_{ii}, for all i, are zero.

For each source, its heat in- or outflow affects its temperature according to (cf (2.26)):

$$dU_i = c_i(T_i)dT_i = \sum_{j=0}^{N} dQ_{ij} \qquad i = 0,1,\ldots,N \qquad (4.3)$$

and for each engine, its ability to produce work is limited by its entropy production, which is at least the minimal quantity $d\hat{S}_{ij}$:

$$\frac{dQ_{ij}}{T_i} + \frac{dQ_{ji}}{T_j} \geq d\hat{S}_{ij} \qquad j<i \qquad (4.4)$$

The problem we are to study is to find the maximum total work extractable from the system, given the entropy limitations (4.4), i e to maximize:

$$W = \int_{\substack{initial\\state}}^{\substack{final\\state}} dW = -\int_{\substack{initial\\state}}^{\substack{final\\state}} \sum_{i=0}^{N} \sum_{j=0}^{N} dQ_{ij} = -\sum_{i=0}^{N} \int_{T_i^0}^{T_i^*} c_i(T_i)dT_i \qquad (4.5)$$

subject to (4.2), (4.3) and (4.4), the T_i^* being final temperatures.

The total minimal entropy production of the total system $d\hat{S}$ during a short interval $(t,t+dt)$ is obtained by adding $d\hat{S}_{ij}$ over all engines:

$$d\hat{S} = \frac{1}{2} \sum_{i=0}^{N} \sum_{j=0}^{N} d\hat{S}_{ij} = \frac{1}{2} \sum_{i=0}^{N} \sum_{j=0}^{N} \dot{\hat{S}}_{ij}(t)dt = \dot{\hat{S}}dt \qquad (4.6)$$

where we have introduced the convention that $d\hat{S}_{ij} = d\hat{S}_{ji}$ for $i<j$ and $d\hat{S}_{ii} = 0$ for all i. This implies that the summation in (4.6) takes place twice over all engines at the same time simplifying the formulae. In (4.6) $\hat{S}_{ij}(t)$ refers to the given instanteneous minimal rate of entropy production of engine (i,j) and $\dot{\hat{S}}$ to the associated minimal total rate of entropy production of the system as a whole, i e $\dot{\hat{S}}_{ij} = \frac{d\hat{S}_{ij}}{dt}$ etc.

It is shown in the theorem in section 4.2 that the problem to maximize W in (4.5) subject to (4.3) and (4.4) is equivalent to maximizing W in (4.5) subject to the following total entropy constraint:

$$\sum_{i=0}^{N} \frac{c_i(T_i)dT_i}{T_i} \geq d\hat{S} \tag{4.7}$$

or with time t as the only independent variable:

$$\sum_{i=0}^{N} \frac{c_i(T_i)\dot{T}_i}{T_i} \geq \dot{\hat{S}} \tag{4.8}$$

where $\dot{T}_i$ is the instantaneous rate of change in temperature T_i at time t.

We therefore attempt to find all T_i as functions of time such that:

$$W = -\sum_{i=0}^{N} \int_0^\infty c_i(T_i)\dot{T}_i dt \tag{4.9}$$

is maximized, subject to (4.8). Let us solve this problem by a variational method. Introducing a Lagrangean multiplier function $\alpha(t) \geq 0$, we form the Lagrangean:

$$L = -\sum_{i=0}^{N} \int_0^\infty c_i(T_i)\dot{T}_i dt + \int_0^\infty \alpha(t)\left(\sum_{i=0}^{N} \frac{c_i(T_i)\dot{T}_i}{T_i} - \dot{\hat{S}}\right)dt \tag{4.10}$$

A necessary first-order requirement for a constrained maximum is that the first variation of the associated Hamiltonian is zero:

$$\frac{\partial H}{\partial T_i} - \frac{d}{d\tau}\frac{\partial H}{\partial \dot{T}_i} = 0 \qquad \text{for all } i \tag{4.11}$$

where:

$$H(T_i, \dot{T}_i, t) = -\sum_{i=0}^{N} c_i(T_i)\dot{T}_i + \alpha(t)\left(\sum_{i=0}^{N}\frac{c_i(T_i)\dot{T}_i}{T_i} - \dot{S}\right) \tag{4.12}$$

Differentiating this function yields:

$$\frac{\partial H}{\partial T_i} - \frac{d}{d\tau}\frac{\partial H}{\partial \dot{T}_i} = -\dot{\alpha}\frac{c_i(T_i)}{T_i} = 0 \tag{4.13}$$

since all other terms cancel out due to the linearity in $\dot{T}_i$. All capacities $c_i(T_i)$ are positive implying from (4.13) that:

$$\alpha = const \tag{4.14}$$

Since this multiplier is constant, it can be taken outside of the integral in (4.10), enabling us to write the Lagrangean in the form:

$$L = -\sum_{i=0}^{N}\int_{T_i^0}^{T_i^*} c_i(T_i)dT_i + \alpha\left(\sum_{i=0}^{N}\int_{T_i^0}^{T_i^*}\frac{c_i(T_i)}{T_i}dT_i - \hat{S}\right) =$$

$$= -\sum_{i=0}^{N}\left(U_i(T_i^*) - U_i(T_i^0) - \alpha(S_i(T_i^*) - S_i(T_i^0))\right) - \alpha\hat{S} \tag{4.15}$$

where U_i is a primitive function of c_i interpreted as internal energy, S_i a primitive function of $c_i T_i^{-1}$ interpreted as the entropy of source i, and where $\hat{S}$, is total given entropy production. In the right-hand member of (4.15) all T_i^* refer to final temperatures alone, which means that L depends only on initial and final temperatures, due to the fact that the integrands in the middle member contain exact differentials.

The necessary maximization conditions require:

$$\begin{cases} \dfrac{\partial L}{\partial T_i} = -c_i(1-\alpha/T_i^0) = 0 \qquad i=0,1,\ldots,N \\[2ex] \dfrac{\partial L}{\partial \alpha} = \sum\limits_{i=0}^{N} (S_i(T_i)-S_i(T_i^0)) - \hat{S} \geq 0 \\[2ex] \alpha \geq 0 \end{cases} \tag{4.16}$$

where equality holds in the latter inequality when $\alpha>0$ according to Kuhn-Tucker requirements.

From (4.16) we find the final temperature T_i^* to be equal for all i and equal to the multiplier α:

$$\alpha = T_i^* > 0 \qquad \text{for all } i \tag{4.17}$$

Hence:

$$\sum_{i=0}^{N} S_i(\alpha) = \sum_{i=0}^{N} S_i(T_i^0) + \hat{S} \tag{4.18}$$

Writing $S(\alpha)$ for the left-hand member of (4.18), we obtain the following dependence of the final temperature on all initial temperatures:

$$\alpha = S^{-1}\left(\sum_{i=0}^{N} S_i(T_i^0) + \hat{S}\right) \tag{4.19}$$

which is unique, since all U_i are monotonically increasing, being primitive functions of positive functions.

Hence the maximal work extractable from the system under consideration will be:

$$W_{max} = -\sum_{i=0}^{N} \int_{T_i^0}^{\alpha} c_i(T_i)dT_i = \sum_{i=0}^{N} (U_i(T_i^0)-U_i(\alpha)) \tag{4.20}$$

The second-order sufficient condition for a constrained maximum of W is that $d^2L < 0$, for all dT_i which are not all zero and which satisfy the constraint $\sum_{i=0}^{N} \frac{c_i(T_i)dT_i}{T_i} = 0$. Computing d^2L we find:

$$d^2L = -\sum_{i=0}^{N}\left(\frac{dc_i}{dT_i} + \frac{c_i}{T_i}\right)dT_i^2 + 2d\alpha\sum_{i=0}^{N}\frac{c_i dT_i}{T_i} \tag{4.21}$$

which is negative at least if the marginal change of each heat capacity $\frac{dc_i}{dT_i}$ does not fall short of $-c_iT_i^{-1}$.

Since $\alpha>0$ the entropy constraint in (4.16) is effective which is typical of this class of problems. Let us examine the effects of marginal changes in the given parameters $\hat{S}$ and T_i^0, $i=0,1,\ldots,N$. A marginal change in $\hat{S}$ by $\delta\hat{S}$ creates a change in the final temperature by (4.18) amounting to $\delta\alpha$:

$$\sum_{i=0}^{N}\delta S_i(\alpha) = \sum_{i=0}^{N}\frac{c_i(\alpha)}{\alpha}\delta\alpha = -\frac{\delta W_{max}}{\alpha} = \delta\hat{S} \tag{4.22}$$

Therefore the multiplier may be interpreted as:

$$\alpha = -\frac{\partial W_{max}}{\partial \hat{S}} > 0 \tag{4.23}$$

which implies that the maximum work output and entropy production are related inversely and that this dependence is more sensitive, the higher the final temperature is.

Also, by assuming a marginal change δT_i^0 in the ith initial temperature T_i^0 alone, we find from (4.18) that:

$$\sum_{i=0}^{N}\frac{c_i(\alpha)}{\alpha}\delta\alpha = \frac{c_i(T_i^0)}{T_i^0}\delta T_i^0 \tag{4.24}$$

and therefore by (4.20) that:

$$\delta W_{max} = -\sum_{i=0}^{N}c_i(\alpha)\delta\alpha - c_i(T_i^0)\delta T_i^0 = c_i(T_i^0)\left(1-\frac{\alpha}{T_i^0}\right)\delta T_i^0 \tag{4.25}$$

Hence, if there is a rise in T_i^0, i e $\delta T_i^0 > 0$, the maximal work output will increase if T_i^0 is above the final temperature α and decrease if it is below, quite as expected.

From (4.23) it is evident that the work output will be its very highest for a zero entropy production $\hat{S}=0$. Therefore the *exergy potential* of the system will be:

$$\Xi = W_{max}(\hat{S}=0) = \sum_{i=0}^{N} (U_i(T_i^0) - U_i(S^{-1}(\sum_{j=0}^{N} S_j(T_j^0))) \tag{4.26}$$

This is the most explicit expression we can find for the exergy content in the case when heat capacities depend on temperatures alone and no other source characteristics are considered.

When all heat capacities are constant, we find simple expressions for the primitive functions $U_i(T_i)$ and $S_i(T_i)$:

$$\begin{cases} U_i(T_i) = c_i T_i + const \\ S_i(T_i) = c_i \log T_i + const \end{cases} \tag{4.27}$$

Inserting this S_i into (4.18) and solving yields:

$$\alpha = \prod_{i=0}^{N} T_i^{0\, c_i/c} \; e^{\hat{S}/c} \tag{4.28}$$

where:

$$c = \sum_{j=0}^{N} c_j \tag{4.29}$$

and by (4.20) and (4.26):

$$W_{max} = \sum_{i=0}^{N} c_i(T_i^0) - \prod_{k=0}^{N} T_k^{c_k(T_k^0)} e^{\hat{S}/r} \tag{4.30}$$

$$E = \sum_{i=0}^{N} c_i(T_i^0) - \prod_{k=0}^{N} T_k^{c_k(T_k^0)} \tag{4.31}$$

Up to now we have treated all $N+1$ heat sources on an equal basis applying the symmetry principle, and it is quite clear that our resulting expressions for α, W_{max} and E in (4.19), (4.20), (4.26) in the more general case, and (4.28)-(4.31) in the constant capacity case, are symmetric functions of the pairs of source properties $(c_i(T_i^0), T_i^0)$. Let us now investigate consequences of forcing one of the sources to become infinite, say the source with index 0. Hence, we shall study the behaviour of (4.19), (4.20) and (4.26) when $c_0(T_0)\to\infty$.

The two members of (4.18) both tend towards infinity when $c_0\to\infty$. Let us assume that $c_0(T_0)$ increases uniformly by a factor r and let $r\to\infty$. Viewing $\alpha(r)$ as an implicit function of r, (4.18) for any finite r, may be written:

$$rS_0(\alpha(r)) + \sum_{i=1}^{N} S_i(\alpha(r)) = rS_0(T_0^0) + \sum_{i=1}^{N} S_i(T_i^0) + \hat{S} \tag{4.32}$$

Total differentiation with respect to r yields:

$$rc_0(\alpha(r)) + \sum_{i=1}^{N} c_i(\alpha(r))\frac{\frac{d\alpha}{dr}}{\alpha(r)} + S_0(\alpha(r)) - S_0(T_0^0) = 0 \tag{4.33}$$

Since the first factor appearing in (4.32) is positive, we must have $\frac{d\alpha}{dr}>0$ when $\alpha(r)<T_0^0$ and vice versa. Thus there is a monotonic tendency for α to approach T_0^0 as r increases. Hence $\alpha(r)$ is bounded for all r. Rearranging the terms in (4.33) and integrating, we obtain:

$$\log \frac{\alpha(r)}{\alpha(1)} = \int_1^r \frac{S_0(T_0^0) - S_0(\alpha(r))}{rc_0(\alpha(r)) + \sum_{i=1}^{N} c_i(\alpha(r))} dr \tag{4.34}$$

Since the integrand behaves as r^{-1} for a large r (apart from the bounded numerator), the numerator must tend towards zero as r increases in order for both members to remain bounded.

Hence we have:

$$\lim_{c_0 \to \infty} \alpha = \lim_{r \to \infty} \alpha(r) = T_0^0 \tag{4.35}$$

which means that the infinite "environment" temperature coincides with the final temperature, quite as expected.

In order to find the limit value of W_{max} as $c_0 \to \infty$, we first find that all terms in (4.20) behave regularly as $\alpha \to T_0^0$, except the term for $i=0$, which behaves according to:

$$- \lim_{r \to \infty} \int_{T_0^0}^{(r)} \alpha c_0(T_0) dT_0 = - \lim_{r \to \infty} rc_0(T_0^0)(\alpha(r) - T_0^0) \tag{4.36}$$

Solving for r in (4.32) and inserting this r into (4.36) yields:

$$- \lim_{\alpha \to T_0^0} c_0(T_0^0)(\alpha - T_0^0) \frac{\sum_{i=0}^{N} (S_i(T_i^0) - S_i(\alpha)) + \hat{S}}{S_0(\alpha) - S_0(T_0^0)} =$$

$$= T_0^0 \left(\sum_{i=0}^{N} (S_i(T_0^0) - S_i(T_0^0)) - \hat{S} \right) \tag{4.37}$$

Hence we obtain the two limiting expressions:

$$\lim_{\theta_j \to \infty} W_{max} = \sum_{i=1}^{N} (U_i(T_i^0) - U_i(T_j^0) + T_j^0 (S_i(T_i^0) - S_i(T_j^0))) - T_j^0 \hat{S} \quad (4.38)$$

$$\lim_{\theta_j \to \infty} E = \sum_{i=1}^{N} (U_i(T_i^0) - U_i(T_j^0) + T_0^0 (S_i(T_i^0) - S_i(T_j^0))) \quad (4.39)$$

In this case with one infinite source, we may therefore write:

$$W_{max} = E - T_j^0 \hat{S} \quad (4.40)$$

The maximum work output is thus, as always, limited to the exergy potential E. Of this potential the amount $T_j^0 \hat{S}$ is lost due to the entropy production in the extraction process. The linearity between lost work $T_j^0 \hat{S}$ and $\hat{S}$ rests heavily on the infinity assumption concerning the environment, but is evidently independent of the possible dependence of heat capacities on temperatures.

In the case of constant heat capacities we apply (4.27) to (4.38)--(4.39) and obtain:

AD-A104 628 NAVAL POSTGRADUATE SCHOOL MONTEREY CA F/G 5/3
TOWARDS A THEORETICAL BASIS FOR ENERGY ECONOMICS.(U)
AUG 80 R W GRUBBSTROM
UNCLASSIFIED NPS-54-80-015 NL

2 OF 4
AD
A104628

$$W_{max} = T_0^0 \sum_{i=1}^{N} c_i \left(\frac{T_i^0}{T_0^0} - 1 - \log \frac{T_i^0}{T_0^0}\right) - T_0^0 \hat{S} \tag{4.41}$$

$$E = T_0^0 \sum_{i=1}^{N} c_i \left(\frac{T_i^0}{T_0^0} - 1 - \log \frac{T_i^0}{T_0^0}\right) \tag{4.42}$$

which in the subcase of one finite and one infinite source become:

$$W_{max} = T_0^0 c_1 \left(\frac{T_1^0}{T_0^0} - 1 - \log \frac{T_1^0}{T_0^0}\right) - T_0^0 \hat{S} \tag{4.43}$$

$$E = T_0^0 c_1 \left(\frac{T_1^0}{T_0^0} - 1 - \log \frac{T_1^0}{T_0^0}\right) = T_0^0 c_1 g(T_1^0 T_0^{0-1}) \tag{4.44}$$

where $g(\cdot)$ is the *exergy function*, cf (3.39). Eq (4.44) is an expression derived elsewhere [Ford, et al, 1975, p 46]. Due to the "every-day" association of E with the single finite source, E in (4.44) is referred to as "the exergy of the object", i e a property of the source with respect to its constant environment, although this association in fact is incorrect as argued earlier, since it violates the symmetry principle (cf section 1.3).

Figure 4.2 illustrates E as a function of $T_1^0 T_0^{0-1}$ according to (4.44).

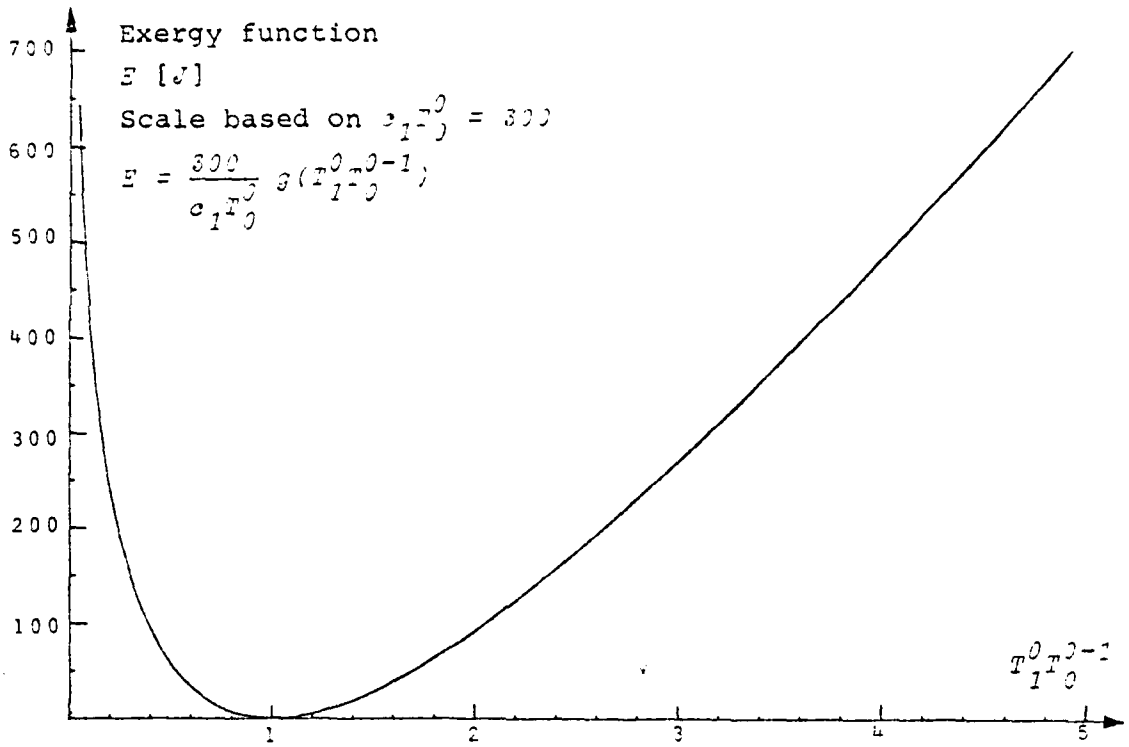

Figure 4.2. Exergy as a function of the initial temperature of the finite source in the two-source case with an infinite environment

4.3. Proof of the equivalence between the solution to the non-aggregated and the aggregated extraction problems

In the preceding section we started by formulating the problem to maximize:

$$W = - \sum_{i=0}^{N} \int_{T_i^0}^{T_i^*} c_i(T_i)dT_i \tag{4.45}$$

subject to the constraints:

$$c_i(T_i)dT_i = \sum_{j=0}^{N} dQ_{ij} \tag{4.46}$$

$$\frac{dQ_{ij}}{T_i} + \frac{dQ_{ji}}{T_j} \geq d\hat{S}_{ij} \tag{4.47}$$

but instead solved the simpler problem to maximize W in (4.45) subject to the single constraint:

$$\sum_{i=0}^{N} \frac{c_i dT_i}{T_i} \geq d\hat{S} \tag{4.48}$$

where $d\hat{S}_{ij}$ are given differentials for $i>j$ and $d\hat{S}$ the sum of all such differentials. The problem solved may thus be looked upon as an aggregate problem in the sense that one heat engine produces all work and is fed by (or leaves) heat from (to) all sources simultaneously.

This section will be devoted to proving the equivalence of the aggregate and the original problem. In order to simplify our formulae slightly, we introduce the abbreviation:

$$z_i = c_i(T_i)dT_i \qquad i=0,1,\ldots,N \tag{4.49}$$

Since the objective function coincides in both problems we shall compare the choice opportunities available according to the two sets of constraints.

In the original problem, at each point in time we are to choose an array $z=(z_0,z_1,\ldots,z_N)$ such that there exists an array dQ_{ij}, $i,j=0,1,\ldots,N$ that satisfies (4.46) and (4.47), and in the aggregate problem a similar array z that satisfies (4.48). Let us therefore define the following two sets:

$$Z_I = \{z \mid \text{For each } i,j \text{ there exists } dQ_{ij} \text{ that satisfies } (4.46)-(4.47)\} \tag{4.50}$$

$$Z_{II} = \{z \mid z \text{ satisfies } (4.48)\} \tag{4.51}$$

If Z_I and Z_{II} are the same sets, then the two problems are quivalent. It is easily seen that if $z \in Z_I$ then also $z \in Z_{II}$. Hence:

$$Z_I \subset Z_{II} \tag{4.52}$$

To show this we only need to add all inequalities in (4.47) together. The converse is more involved to prove, i e that for any $z \in Z_{II}$, then there exists an array dQ_{ij} that satisfies (4.46) -(4.47).

For the given z belonging to Z_{II}, we first compute:

$$dS = \sum_{i=0}^{N} \frac{z_i}{T_i} \geq d\hat{S} \tag{4.53}$$

We also introduce the non-negative weights:

$$\gamma_{ij} = d\hat{S}_{ij} / d\hat{S} \tag{4.54}$$

Adding all γ_{ij} together for all $i<j$, or, alternatively, for all $i>j$, this sum is unity. The sum of all γ_{ij} is therefore 2. As before we have defined $d\hat{S}_{ij}=d\hat{S}_{ji}$. Combining (4.53) and (4.54) we find that $\gamma_{ij}dS \geq d\hat{S}_{ij}$, for all i,j. If there exists an array of dQ_{ij} that satisfies:

$$\sum_{j=0}^{N} dQ_{ij} = z_i \qquad \text{for all } i \tag{4.55}$$

$$\frac{dQ_{ij}}{T_i} + \frac{dQ_{ji}}{T_j} = \gamma_{ij}dS \qquad \text{for all } i,j \tag{4.56}$$

this array obviously satisfies (4.46)-(4.47). Let us divide the components of a potential candidate dQ_{ij} among all arrays into the two subsets, one for index values $i>j$ and one for $i<j$. Starting with $i=0$, we arbitrarily choose values of dQ_{0j}, so that their sum satisfies $\sum_{j>0} dQ_{0j}=z_0$. Let us now choose dQ_{i0} for $i>0$ by the equation (4.56) for $j=0$. This is obviously possible since these dQ_{i0} do not coincide with any of the ones already chosen. As a next step choose arbitrarily dQ_{1j}, $j>1$, such that their sum satisfies:

$$\sum_{j>1} dQ_{1j} = z_1 - dQ_{10} \tag{4.57}$$

where dQ_{10} in the right-hand member already has been chosen and z_1 is given. With these dQ_{1j} chosen, their symmetric counterparts dQ_{j1} are determined by (4.56). Next choose dQ_{2j} for $j>2$ arbitrarily and satisfying:

$$\sum_{j>2} dQ_{2j} = z_2 - dQ_{20} - dQ_{21} \tag{4.58}$$

and their counterparts dQ_{j2} by (4.56), and the process may be repeated until the last but one subarray $dQ_{N-1\,j}$ $j=N$, is chosen, satisfying:

$$dQ_{N-1\,j} = z_{N-1} - \sum_{j<N-1} dQ_{N-1\,j} \tag{4.59}$$

along with its counterpart given from (4.55):

$$dQ_{N\,N-1} = T_N\left(\gamma_{N\,N-1}dS - \frac{dQ_{N-1\,N}}{T_{N-1}}\right) \tag{4.60}$$

It remains to be shown that the last of the equalities in (4.55) for $i=N$ automatically is satisfied. The procedure outlined has up to now produced a complete array of dQ_{ij} that satisfies:

$$\sum_{j=0}^{N} dQ_{ij} = z_i \qquad \text{for all } i \tag{4.61}$$

$$\frac{dQ_{ij}}{T_i} + \frac{dQ_{ji}}{T_j} = \gamma_{ij}dS \qquad \text{for all } i,j \tag{4.62}$$

The values of the z_i are not entirely arbitrary, however, since they must satisfy (4.53). Adding together the equations (4.62) for all i,j and using (4.61) when permissible, we obtain:

$$\sum_{i=0}^{N} \frac{z_i}{T_i} + \sum_{j=0}^{N} \frac{dQ_{Nj}}{T_N} - \frac{z_N}{T_N} + \sum_{j=0}^{N} \frac{z_j}{T_j} + \sum_{i=0}^{N} \frac{dQ_{Ni}}{T_N} - \frac{z_N}{T_N} = 2dS \tag{4.63}$$

using the property of the weights γ_{ij}, and therefore by (4.53):

$$z_N = \sum_{j=0}^{N} dQ_{Nj} \tag{4.64}$$

Hence, we have shown that for $z \in Z_{II}$, it is possible to find an array dQ_{ij} satisfying (4.55)-(4.56) and therefore also (4.46) -(4.47). This implies that also $z \in Z_I$. Thus by (4.52) Z_I and Z_{II} must coincide:

$$Z_I = Z_{II} \tag{4.65}$$

and the aggregate and original problems in the preceding section are equivalent.

The procedure outlined above describing the choice of the dQ_{ij} when given an z satisfying (4.48) shows that the solution to the non-aggregated original problem is not unique. Since the dQ_{ij} may be chosen arbitrarily within certain limitations, this means that such a choice will affect the work output dW_{ij} from an individual heat engine. Therefore the solution will not specify the contribution from different engines to the total work output. Neither will the solution exactly specify the time path of the temperatures involved apart from the requirement that they and their time derivatives satisfy (4.8) with equality. This implies in the case of constant heat capacities that the temperatures arranged into a vector at each time t must stay on a moving surface given by:

$$\prod_{i=0}^{N} \left(\frac{T_i(t)}{T_i^0}\right)^{c_i} = e^{\hat{S}(t)} \tag{4.66}$$

4.4. Exergy from merging subsystems

Before proceeding to the treatment of several infinite sources, we investigate one further set of relationships concerning finite-source systems. Let us assume the existence of several systems of heat sources, or equivalently, several subsystems of one overall system, and that these subsystems share no common source. For each subsystem we may compute its exergy potential since they are isolated. We investigate the relation between these potentials and the potential of the overall system.

Let the set of indices $I=\{0,1,\ldots,N\}$ pertaining to all sources be partitioned into M mutually exclusive subsets $I_1, I_2, \ldots, I_M$, each corresponding to a subsystem, and let E_k denote the exergy and α_k the final temperature of subsystem k and $\hat{S}_k$ the given minimal entropy production of the subsystem in isolation:

$$E_k = - \sum_{i \in I_k} \int_{T_i^0}^{\alpha_k} c_i(T_i)\,dT_i \tag{4.67}$$

where α_k is determined by:

$$\sum_{i \in I_k} S_i(\alpha_k) = \sum_{i \in I_k} S_i(T_i^0) + \hat{S}_k \tag{4.68}$$

Now let all systems merge, starting out from their individual final temperatures. The additional exergy potential will be:

$$\Delta E = - \sum_{k=1}^{M} \sum_{i \in I_k} \int_{\alpha_k}^{\alpha} c_i(T_i)\,dT_i \tag{4.69}$$

where α satisfies:

$$\sum_{k=1}^{M} \sum_{i \in I_k} S_i(\alpha) = \sum_{k=1}^{M} \sum_{i \in I_k} S_i(\alpha_k) + \Delta\hat{S} =$$

$$= \sum_{k=1}^{M} \left(\sum_{i \in I_k} S_i(T_i^0) + \hat{S}_k \right) + \Delta\hat{S} \tag{4.70}$$

However, if all sources from the beginning were brought together, they would have an exergy potential of:

$$E = - \sum_{k=1}^{M} \sum_{i \in I_k} \int_{T_i^0}^{\bar{\alpha}} e_i(T_i) dT_i =$$

$$= - \sum_{k=1}^{M} \sum_{i \in I_k} \left[\int_{T_i^0}^{\alpha_k} e_i(T_i) dT_i + \int_{\alpha_k}^{\bar{\alpha}} e_i(T_i) dT_i \right] \tag{4.71}$$

where $\bar{\alpha}$ is the final temperature in this case, satisfying:

$$\sum_{k=1}^{M} \sum_{i \in I_k} S_i(\bar{\alpha}) = \sum_{k=1}^{M} \left(\sum_{i \in I_k} S_i(T_i^0) + \hat{S}_k \right) + \Delta\hat{S} \tag{4.72}$$

assuming that the entropy production will be $\sum_{k=1}^{M} \hat{S}_k + \Delta\hat{S}$ also in this case. Since the S_i-functions are monotonic the solution to (4.70) and to (4.69) coincide, making $\bar{\alpha}=\alpha$. Therefore (4.71) can be interpreted as:

$$E = \sum_{k=1}^{M} E_k + \Delta E \tag{4.73}$$

which is the intuitively correct result, stating that the exergy of the entire system equals the sum of the exergies of the subsystems plus the increment resulting from their potential of being fusioned.

4.5. Exergy potential of a system of infinite sources

It is evident from the preceding sections that if there are more than one infinite sources with differing temperatures, then the extractable total amount of work must be infinite. In order to study systems of sources with infinite heat capacities we therefore assume given *flow capacity limitations* on the in- and outflowing heat streams and analyze the relationships between such flow capacities and exergy (cf section 3.2). Since we also confine ourselves to steady-state conditions, we derive expressions for the maximum *power* output, being the rate of work output, rather than work output itself.

Let us consider a system of N infinite sources, each source characterized by its temperature $T_1, T_2, \ldots, T_N$, which are constant due to the infinite heat capacities. Let us also apply an aggregate view to the extraction process characterized by a common given minimal total constant entropy production rate of $\hat{S}$. Source i is assumed to be able to leave or receive a heat flow Q_i above and below the two capacity limits $-\underline{Q}_i<0$ and $\overline{Q}_i>0$, which are given parameters. The power output is denoted W and the *exergy power potential* E. The time derivative dot notations have thus been omitted for the sake of convenience. Also, without any loss in generality, all sources are assumed to have different temperatures.

Our problem is to maximize:

$$W = -\sum_{i=1}^{N} Q_i \tag{4.74}$$

subject to the constraints:

$$\sum_{i=1}^{N} Q_i T_i^{-1} \geq \hat{S} \tag{4.75}$$

$$-\underline{Q}_i \leq Q_i \leq \overline{Q}_i \qquad i=1,2,\ldots,N \tag{4.76}$$

We assume that the upper flow capacity limits are sufficient to ensure the existence of a solution, i e that $\sum_{i=1}^{N} \overline{Q}_i T_i^{-1} \geq \hat{\ }$. Introducing non-negative Lagrangean multipliers α, β_i, γ_i for the inequalities in (4.75)-(4.76), we form the Lagrangean:

$$L = -\sum_{i=1}^{N} Q_i + \alpha\left(\sum_{i=1}^{N} Q_i T_i^{-1} - \hat{S}\right) + \sum_{i=1}^{N} \beta_i(\overline{Q}_i - Q_i) +$$

$$+ \sum_{i=1}^{N} \gamma_i(Q_i + \underline{Q}_i) \tag{4.77}$$

Since the objective function W as well as all constraints are linear in the decision variables Q_i, the Kuhn-Tucker conditions are both necessary and sufficient. These are for this maximization problem:

$$\frac{\partial L}{\partial Q_i} = -1 + \alpha T_i^{-1} - \beta_i + \gamma_i = 0 \qquad i=1,2,\ldots,N \tag{4.78}$$

$$\frac{\partial L}{\partial \alpha} = \sum_{i=1}^{N} Q_i T_i^{-1} - \hat{S} \geq 0 \tag{4.79}$$

$$\frac{\partial L}{\partial \beta_i} = \overline{Q}_i - Q_i \geq 0 \qquad i=1,2,\ldots,N \tag{4.80}$$

$$\frac{\partial L}{\partial \gamma_i} = \underline{Q}_i + Q_i \geq 0 \qquad i=1,2,\ldots,N \tag{4.81}$$

$$\alpha,\ \beta_i,\ \gamma_i \geq 0 \qquad i=1,2,\ldots,N \tag{4.82}$$

with equalities in (4.79)-(4.81) when α, β_i or γ_i is positive and equality in (4.82) for α, β_i or γ_i when the corresponding inequality in (4.79)-(4.81) is strict.

From (4.80)-(4.81) we find that either β_i or γ_i is zero for each i. We rewrite (4.78) according to:

$$\alpha T_i^{-1} - 1 = \beta_i - \gamma_i \tag{4.83}$$

Since $\beta_i, \gamma_i \geq 0$ and $\beta_i \gamma_i = 0$, a temperature T_i below α implies $\beta_i > 0$, $\gamma_i = 0$ and $Q_i = \bar{Q}_i > 0$ and a temperature T_i above α implies $\gamma_i > 0$, $\beta_i = 0$ and $Q_i = -\underline{Q}_i < 0$.

An important result is that α must satisfy:

$$\underset{i}{Min}\ T_i \leq \alpha \leq \underset{i}{Max}\ T_i \tag{4.84}$$

To prove this assume a contradictory subcase that all T_i were below α. This would imply $\sum_{i=1}^{N} \frac{\bar{Q}_i}{T_i} - \hat{S} > 0$ and $\alpha = 0$ according to capacitiy assumption, which contradicts all temperatures being positive. Hence all temperatures cannot lie below α. Assume instead the other contradictory subcase that all temperatures are above α. This implies the contradiction $-\sum_{i=1}^{N} \frac{\underline{Q}_i}{T_i} - \hat{S} > 0$. Hence, neither can all T_i lie above α, proving (4.84). The multiplier α therefore represents a mean temperature just as in previous sections. As a further consequence we note that $\alpha > 0$, which implies:

$$\sum_{i=1}^{N} Q_i T_i^{-1} = \hat{S} \tag{4.85}$$

This means that as small an entropy rate as possible is produced, as in our former cases.

Furthermore let us assume that $\alpha \neq T_i$ for all i. This would imply an equality of the kind:

$$-\Sigma' \underline{Q}_i T_i^{-1} + \Sigma'' Q_i T_i^{-1} = \hat{S} \tag{4.86}$$

where Σ' and Σ'' denote summations over a subset of hot and the complementary subset of cold sources respectively. This would be in contradiction to the independent choices of given capacity limits $\underline{Q}_i$, $\overline{Q}_i$ and entropy rate $\hat{S}$ (i e an unprobable choice of parameters). Therefore, in a general case $\alpha = T_i$, for some T_i.

In order to find a procedure for determining α, i e the mean-valued source temperature, we note that we must have an equality of:

$$- \Sigma' \underline{Q}_i T_i^{-1} + Q_\alpha \alpha^{-1} + \Sigma'' \overline{Q}_i T_i^{-1} = \hat{S} \tag{4.87}$$

when Σ' sums terms with T_i above α and Σ'' terms with T_i below α, and where Q_α denotes the positive or negative flow of the source having the temperature α. Also from (4.86) we find that if Q_α takes on its maximum $\overline{Q}_\alpha$ or its minimum $\underline{Q}_\alpha$ the following inequalities hold:

$$- \hat{\Sigma}' \underline{Q}_i T_i^{-1} + \Sigma'' \overline{Q}_i T_i^{-1} \leq \hat{S} \leq - \Sigma' \underline{Q}_i T_i^{-1} + \hat{\Sigma}'' \overline{Q}_i T_i^{-1} \tag{4.88}$$

where $\hat{\Sigma}'$ includes all hot sources, counting α as a hot temperature, and $\hat{\Sigma}''$ all cold sources, counting α as a cold temperature. Since the left-hand and right-hand members both increase as α runs through different temperature alternatives from cold to hot, a temperature α will eventually be reached satisfying (4.88) at which point the solution according to (4.87) is obtained. This solution is unique since two different alternatives cannot satisfy (4.88) simultaneously.

Inserting the solution into (4.74) yields:

$$W_{max} = \Sigma' \underline{Q}_i - Q_\alpha - \Sigma'' \overline{Q}_i = \Sigma' (1-\alpha T_i^{-1}) \underline{Q}_i -$$

$$- \Sigma'' (1-\alpha T_i^{-1}) \overline{Q}_i - \alpha \hat{S} \tag{4.89}$$

which is the maximum power extractable.

Clearly from (4.87) we see that the choice of α and therefore the entire solution depends on the rate of entropy production $\hat{S}$. A great increase in $\hat{S}$ alone would require more "cold terms" in Σ'' and less "hot terms" in Σ' and a higher α. Therefore the term $\alpha\hat{S}$ in (4.89) cannot by itself represent the difference between exergy potential and maximal work output. However, if we solve our problem with $\hat{S} = 0$, we obtain the exergy potential as:

$$E = \Sigma'(1-\alpha_0 T_i^{-1})\underline{Q}_i - \Sigma''(1-\alpha_0 T_i^{-1})\overline{Q}_i \tag{4.90}$$

where α_0 denotes the solution in α for $\hat{S} = 0$. This expression should be compared with (3.3) and (3.7). The first term concerns optimal negative flows $Q_i = -\underline{Q}_i$ and the second sum optimal positive flows $Q_i = \overline{Q}_i$. All terms apparently yield positive contributions (for $T_i \neq \alpha$) to W_{max} except "lost work" $\alpha\hat{S}$. If there are only two sources, and α takes on the temperature of the cold source (4.89) reduces to (3.2), and in the opposite case when α is the high temperature (4.89) reduces to (3.6).

From a marginal change in $\hat{S}$, we find that:

$$\frac{\partial W_{max}}{\partial \hat{S}} = -\alpha < 0 \tag{4.91}$$

Since α changes upwards in steps as $\hat{S}$ increases, W_{max} as a function of $\hat{S}$ alone behaves as is illustrated in figure 4.3.

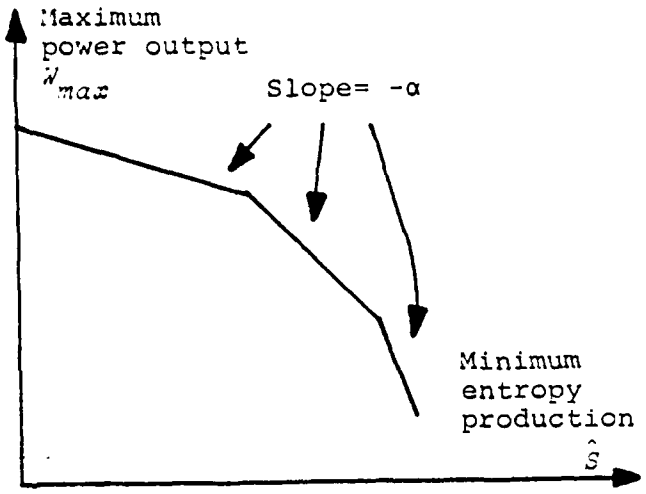

Figure 4.3. Principal form of maximal power output $\dot{W}_{max}$ as a function of total entropy production rate $\hat{S}$

Also, for marginal changes in $\underline{Q}_i$ for sources with temperatures above α and for marginal changes in $\overline{Q}_i$ for sources with temperatures below α, we find:

$$\frac{\partial \dot{W}_{max}}{\partial \overline{Q}_i} = \beta_i = \alpha T_i^{-1} - 1 > 0 \tag{4.92}$$

$$\frac{\partial \dot{W}_{max}}{\partial \underline{Q}_i} = \gamma_i = 1 - \alpha T_i^{-1} \quad 0 \tag{4.93}$$

whereas:

$$\frac{\partial \dot{W}_{max}}{\partial \underline{Q}_\alpha} = \frac{\partial \dot{W}_{max}}{\partial \overline{Q}_\alpha} = 0 \qquad (in\ general) \tag{4.94}$$

These equations show that capacity increases (downwards) for hot sources as well as capacity increases (upwards) for cold sources will result in a higher maximum power output.

Let us assume that the capacity $\overline{Q}_i$ of one source increases beyond all bounds. This would be equivalent to omitting one of the right-hand inequalities in (4.76) resulting in the disappearance of the corresponding β_i in (4.78). Since $\gamma_i \geq 0$, we obtain from (4.78) that $\alpha \leq T_i$. If this source is hot, the increase in $\overline{Q}_i$ would have no effect. However, if the source is cold we must conclude that $\alpha = T_i$, i e that the mean temperature will be that of the source with infinite capacity. Similarly will an increase in $\underline{Q}_i$ beyond all bounds for a hot source automatically require $\alpha = T_i$. Hence our maximization problem lacks a solution if the restricting capacities of two different sources simultaneosly increase beyond all bounds, which means that in such case an infinite amount of power is available. In cases of one infinite capacity source, this source may conveniently be interpreted as "the environment".

Let us examine the simple case of one hot and one cold source, the former having temperature T_2 and the latter temperature T_1.

From the foregoing it is clear that $T_1 \leq \alpha \leq T_2$. From our previous results it is easily found that when $\overline{Q}_1 T_1^{-1} - \underline{Q}_2 T_2^{-1} < \hat{S}$ we must have $\alpha = T_2$, when $\overline{Q}_1 T_1^{-1} - \underline{Q}_2 T_2^{-1} > \hat{S}$ we must have $\alpha = T_1$ and when the coincidential case $\overline{Q}_1 T_1^{-1} - \underline{Q}_2 T_2^{-1} = \hat{S}$ obtains, we must have $T_1 \leq \alpha \leq T_2$. In the first case $\beta_1 > 0$, $\gamma_1 = \gamma_2 = \beta_2 = 0$ and the solution is:

$$\begin{cases} Q_1 = \overline{Q}_1 \\ Q_2 = T_2(\hat{S} - \overline{Q}_1 T_1^{-1}) \\ E = \overline{Q}_1 (T_2 T_1^{-1} - 1) \end{cases} \tag{4.95}$$

In the second case $\beta_1 = \beta_2 = \gamma_1 = 0$, $\gamma_2 > 0$, and the solution is:

$$\begin{cases} Q_1 = T_1(\hat{S}+\underline{Q}_2 T_2^{-1}) \\ Q_2 = -\underline{Q}_2 \\ E = \underline{Q}_2(1-T_1 T_2^{-1}) \end{cases} \tag{4.96}$$

and in the third case $\beta_2 = \gamma_1 = 0$, $\beta_1 > 0$, $\gamma_2 > 0$ and the solution is:

$$\begin{cases} Q_1 = \overline{Q}_1 \\ Q_2 = -\underline{Q}_2 \\ E = \overline{Q}_1(T_2 T_1^{-1}-1) = \underline{Q}_2(1-T_1 T_2^{-1}) \end{cases} \tag{4.97}$$

In the first case the power output is limited by the ability of the sink to absorb heat, in the second case by the capacity of the hot source to deliver heat and in the third by both of these constraints. When the cold sink determines the limit the "environment" temperature is that of the hot source $\alpha = T_2$, and when the hot source determines the limit, the "environment" temperature is that of the sink $\alpha = T_1$. If both happen to limit simultaneously, the "environment" temperature is undetermined apart from lying in the interval $[T_1, T_2]$.

From this simple example it should be quite clear that there is no ambiguity when defining what temperature to choose as the referential temperature when computing the exergy (apart from the improbable third case when the choice is immaterial).

When the environment is the sink, as is usually the case in practical applications, i e $\alpha = T_1$, we obtain the well-known Carnot-engine formulae:

$$W_{max} = (1-T_1T_2^{-1})\underline{Q}_2 - T_1\hat{S} \tag{4.98}$$

$$E = (1-T_1T_2^{-1})\underline{Q}_2 \tag{4.99}$$

Here W_{max} represents the actual power output of an irreversible engine and E the ideal maximal power output of a reversible Carnot engine.

CHAPTER 5. EXERGY POTENTIAL OF A SYSTEM OF IDEAL GASES AND OF MORE GENERAL SYSTEMS

5.1. Introduction

In the foregoing chapter we presented a rather extensive analysis of a system of heat sources and the relationships between properties of the system and the potential amount of work that, from a theoretical point of view, can be extracted from that system. The sources were characterized by temperatures and heat capacities, depending on the respective temperature, i e by a single state variable for each source.

In this chapter we first introduce a system in which the sources are given two independent properties, temperature as well as volume (or pressure). The sources are interpreted as ideal gases contained in interconnected tanks, the total volume of which is a given constant. Mechanical work may be extracted by two means. On the one hand, *heat engines* may be connected between each pair or sources, by which work is extracted, and on the other hand, there are *piston-cylinder devices* pneumatically connected between each pair of sources, also for extracting work.

The problem we are treating is to find an expression for the maximum total amount of work that may be extracted from the system, when given all initial temperatures, all heat capacities and all initial volumes of the sources. Since we are dealing with ideal gases, we may equally well have used initial pressures instead of either of the two chosen given properties. The system to be analyzed thus is still a very simple system, deliberately chosen so for demonstrative reasons. A corresponding economic system is treated in section 7.6.

In the final sections of this chapter generalizations are made also towards general abstract systems. As a final item is given a proof that the exergy formula (3.53) for a constant environment case is invalid for systems having a finite environment.

5.2. Basic relationships

We consider a system of $(N+1)$ heat and volume (pressure) sources (elements). For the ith element, $i = 0, 1, .., N$, its state being characterized by pressure, volume and temperature alone, its internal energy U_i would be a function of temperature T_i and volume V_i, $U_i(T_i, V_i)$, but for an *ideal gas* specifically, U_i is independent of V_i and a change in internal energy dU_i is therefore determined by a change in temperature alone (cf (2.26)):

$$dU_i = \frac{\partial U_i}{\partial T_i} dT_i = c_i(T_i) dT_i \tag{5.1}$$

Where c_i is heat capacity at constant volume. Furthermore, for an ideal gas, the universal gas law (2.22) is valid:

$$a_i V_i = n_i R T_i \tag{5.2}$$

where n_i is the number of moles of gas occupying the volume V_i and where R is the universal gas constant.

Let us now consider a pair of sources with indices i and j as is illustrated in figure 5.1, also explaining index conventions. Between these sources are coupled, on the one hand, a heat engine, and on the other, a piston-cylinder device. These two devices are denoted (i,j). As before we use the convention that $i<j$ for all devices preventing us from double counting. Altogether there are $N(N+1)/2$ devices of each kind.

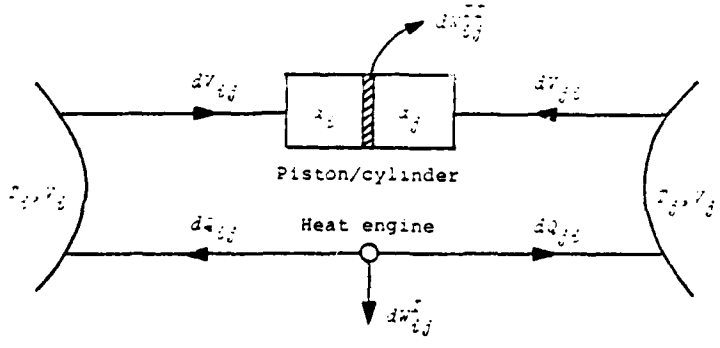

Figure 5.1. Devices coupled between sources i and j

We let dQ_{ij} denote the amount of heat leaving heat engine (i,j) to source i etc, which gives us the following expression for the work extracted by the heat engine:

$$dW^{I}_{ij} = dQ_{ij} - dQ_{ji} \tag{5.3}$$

The total amount of heat entering into source i is denoted by:

$$dQ_i = \sum_{j=0}^{N} dQ_{ij} \tag{5.4}$$

and the total amount of work extracted by all heat engines may now be written:

$$dW^{I} = -\sum_{j=0}^{N} \sum_{i<j} (dQ_{ij} + dQ_{ji}) =$$

$$= -\sum_{j=0}^{N} \sum_{j=0}^{N} dQ_{ij} = -\sum_{j=0}^{N} dQ_i \tag{5.5}$$

where the convention $dQ_{ii} = 0$ is adopted.

The piston-cylinder devices are considered to work adiabatically. Therefore any entropy changes due to their operation are caused by irreversibilities. The differential work produced by piston-cylinder (i,j) written dW^{II}_{ij} equals the sum of reductions in internal energy of sources i and j, which in their turn may be expressed in terms of volume displacements and entropy changes (cf section 3.2):

$$dW^{II}_{ij} = a_i dV_{ij} - T_i dS^{II}_{ij} + a_j dV_{ji} - T_j dS^{II}_{ji}, \quad for\ i < j \tag{5.6}$$

where $dV_{ij} = -dV_{ji}$ is the volume displacement as seen from source

i and dS_{ij}^{II} the entropy flow into source i from the device etc. The total change in internal energy of source i is obtained as:

$$dU_i = \sum_{j=0}^{N} dQ_{ij} - \sum_{j=0}^{N} a_i dV_{ij} + T_i \sum_{j=0}^{N} dS_{ij}^{II} = c_i(T_i)dT_i \quad (5.7)$$

and the total change in internal energy of the system as a whole:

$$\sum_{i=0}^{N} dU_i = \sum_{i=0}^{N} (dQ_{ij} - a_i dV_{ij} + T_i dS_{ij}^{II}) = \sum_{i=0}^{N} c_i(T_i)dT_i \quad (5.8)$$

We introduce the notations dV_i for total change in volume of source i, and dS_i^{II} for total inflow of entropy to source i. Since the total work extracted $dW^I + dW^{II}$ equals $-\sum_{i=0}^{N} dU_i$, using (5.5) we obtain:

$$dW^{II} = \sum_{i=0}^{N} a_i dV_i - \sum_{i=0}^{N} T_i dS_i^{II} \quad (5.9)$$

for the total work delivered by the piston-cylinders where the last term is entirely due to irreversibilities and:

$$dW = -\sum_{i=0}^{N} c_i(T_i)dT_i \quad (5.10)$$

for the total work from all piston-cylinders and engines. The integral of this differential is to be maximized subject to the second law. We take a similar aggregate approach to the entropy constraint as in our treatment in section 4.2. The total entropy flow into source i from the piston-cylinder (entirely irreversible) is obtained as:

$$dS_i^{II} = \frac{dU_i - dQ_i + a_i dV_i}{T_i} \quad (5.11)$$

and the total entropy production of heat engine (i,j) written dS^{I}_{ij}:

$$dS^{I}_{ij} = \frac{dQ_{ij}}{T_i} + \frac{dQ_{ji}}{T_j} \tag{5.12}$$

The total entropy gerenation is obtained by adding these amounts together over all sources and engines:

$$\sum_{i=0}^{N} dS^{II}_{i} + \sum_{i=0}^{N} \sum_{j>i} dS^{I}_{ij} = \sum_{i=0}^{N} \frac{dU_i - dQ_i + x_i dV_i}{T_i} +$$

$$+ \sum_{i=0}^{N} \sum_{j>i} \left(\frac{dQ_{ij}}{T_i} + \frac{dQ_{ji}}{T_j} \right) = \sum_{i=0}^{N} \frac{dU_i + x_i dV_i}{T_i} \tag{5.13}$$

Our entropy constraint will be interpreted in the manner that the total entropy production (5.13) is required to be at least $d\hat{S}$, where $d\hat{S}$ is a given differential parameter describing the minimum possible entropy production. Using (5.1) - (5.2) we therefore write:

$$\sum_{i=0}^{N} c_i \frac{dT_i}{T_i} + \sum_{i=0}^{N} Rn_i \frac{dV_i}{V_i} \geq d\hat{S} \tag{5.14}$$

5.3 Exergy potential of system

The problem for us is to derive an expression for the maximal total amount of work that is extractable when given all initial temperatures and volumes. Our objective function is therefore:

$$W = - \sum_{i=0}^{N} \int_{T_i^0}^{T_i^*} c_i(T_i) dT_i = - \sum_{i=0}^{N} \int_{0}^{\infty} c_i(T_i) \dot{T}_i dt \tag{5.15}$$

to be maximized subject to the constraint (5.14) which is written:

$$\sum_{i=0}^{N} \left(\frac{\dot{T}_i dt}{T_i} + Rn_i \frac{\dot{V}_i}{V_i} dt \right) \geq \dot{\hat{S}} dt \tag{5.16}$$

where dots denote time derivatives, and to the new constraint:

$$\hat{V} - \sum_{i=0}^{N} V_i = 0 \tag{5.17}$$

where $\hat{V}$ is the given total volume of the entire system.

Introducing the non-negative multiplier function α associated with (5.16) and multiplier β with (5.17), we form the Lagrangean:

$$L = -\sum_{i=0}^{N} \int_0^{\infty} c_i \dot{T}_i dt + \sum_{i=0}^{N} \int_0^{\infty} \mu \left(c_i \frac{\dot{T}_i}{T_i} + \right.$$

$$\left. + Rn_i \frac{\dot{V}_i}{V_i} - \dot{\hat{S}} \right) dt - \int_0^{\infty} \sum_{i=0}^{N} \dot{V}_i dt \tag{5.18}$$

The Hamiltonian of the problem will then be:

$$H = \sum_{i=0}^{N} \left(- c_i \dot{T}_i + \alpha \left(c_i \frac{\dot{T}_i}{T_i} + Rn_i \frac{\dot{V}_i}{V_i} - \frac{\dot{\hat{S}}}{N+1} \right) - \beta \dot{V}_i \right) \tag{5.19}$$

The necessary Euler-Lagrange conditions are then:

$$\frac{\partial H}{\partial T_i} - \frac{d}{dt} \frac{\partial H}{\partial \dot{T}_i} = - \dot{\alpha} \frac{c_i}{T_i} = 0 \ , \ i=0,1,\ldots,N \tag{5.20}$$

$$\frac{\partial H}{\partial V_i} - \frac{d}{dt} \frac{\partial H}{\partial \dot{V}_i} = - \dot{\alpha} R \frac{n_i}{V_i} - \dot{\beta} = 0 \ , \ i=0,1,\ldots,N \tag{5.21}$$

which immediately shows that:

$$\dot{\alpha} = \dot{\beta} = 0 \tag{5.22}$$

implying that the constant multipliers α and β, similarly as in section 4.2 may be taken out of the integrals in the Lagrangean, permitting us to write:

$$L = \sum_{i=0}^{N} \Big(- \int_{T_i^0}^{T_i^*} c_i dT_i + \alpha \Big(\int_{T_i^0}^{T_i^*} c_i \frac{dT_i}{T_i} + Rn_i \int_{V_i^0}^{V_i^*} \frac{dV_i}{V_i} -$$

$$- \hat{S}(N+1)^{-1} \Big) \Big) + \beta(\hat{V}(N+1)^{-1} - V_i)) \tag{5.23}$$

where T_i^0, V_i^0 are initial and T_i^*, V_i^* final values. The necessary Kuhn-Tucker conditions now become:

$$\frac{\partial L}{\partial T_i} = - c_i(1 - \frac{\alpha}{T_i^*}) = 0 \quad , \quad i=0,1,\ldots,N \tag{5.24}$$

$$\frac{\partial L}{\partial V_i} = \mu R \frac{n_i}{V_i^*} - \beta = 0 \quad , \quad i=0,1,\ldots,N \tag{5.25}$$

$$\frac{\partial L}{\partial \alpha} = \sum_{i=0}^{N} \Big(\int_{T_i^0}^{T_i^*} c_i \frac{dT_i}{T_i} + Rn_i \int_{V_i^0}^{V_i^*} \frac{dV_i}{V_i} \Big) - \hat{S} \geq 0 \tag{5.26}$$

$$\frac{\partial L}{\partial \beta} = \hat{V} - \sum_{i=0}^{N} V_i = 0 \tag{5.27}$$

and $\alpha \geq 0$, where $\alpha > 0$ yields equality in (5.26). In (5.26) $\hat{S}$ denotes total minimal entropy production. These relationships show that all final temperatures are equal and that all final specific volumes are equal:

$$T_i^* = \alpha \ , \quad i=0,1,\ldots,N \tag{5.28}$$

$$\frac{V_i^*}{n_i} = \frac{\alpha R}{\beta} \ , \quad i=0,1,\ldots,N \tag{5.29}$$

Also, since $\alpha > 0$, we have equality in (5.26), with the consequence that the total entropy production is the least possible. Using the abbreviation:

$$n = \sum_{i=0}^{N} n_i \tag{5.30}$$

we obtain the value of the second multiplier as:

$$\beta = \frac{\alpha R n}{\hat{V}} \tag{5.31}$$

We introduce the primitive function $G_i(T_i)$ of $c_i(T_i)/T_i$ which coincides with $S_i(T_i)$ when temperature is the only state variable. Eq (5.26) then gives us:

$$\sum_{i=0}^{N} \left(G_i(\alpha) - G_i(T_i^0) + \log \left(\frac{V_i^*}{V_i^0}\right)^{n_i R}\right) = \hat{S} \tag{5.32}$$

from which we obtain the mutual final temperature:

$$\alpha = G^{-1}\left(\sum_{i=0}^{N} \left(G_i(T_i^0) + \log\left(\frac{n V_i^0}{n_i \hat{V}}\right)^{n_i R} + \hat{S}\right)\right) \tag{5.33}$$

where G^{-1} is the inverse function of $\sum_{i=0}^{N} G_i(\alpha)$. The final volumes are obtained as:

$$V_i^* = \frac{n_i \hat{V}}{n} \ , \quad i=0,1,\ldots,N \tag{5.34}$$

i e as the molar share of the total given volume. Inserting our expressions obtained into the objective function (5.15) gives us:

$$W_{max} = \sum_{i=0}^{N} (U_i(T_i^0) - U_i(\alpha)) \tag{5.35}$$

where α is given by (5.33)

It might be of interest in this context to make a brief comparison between the final temperature as given by (5.33) and the one determined by the similar model in section 4.2.

The difference between this expression and that of (4.19). is the middle volume-dependent logarithmic term now present. Since G and therefore G^{-1} are monotonically increasing functions, if this term is negative α will be lower in (5.33) than in (4.19) and vice versa. We write this term in the form:

$$R \sum_{i=0}^{N} n_i \left(\log \frac{V_i^0}{n_i} - \log \frac{\hat{V}}{n}\right) \tag{5.36}$$

Under the constraints $\sum_{i=0}^{N} n_i = n$ and $\sum_{i=0}^{N} V_i^0 = \hat{V}$, this function will have a unique maximum with the value zero. Therefore, in general, this term will be negative and only if all specific volumes $v_i = V_i^0/n_i$ are equal to start with, the expression will be zero-valued. Hence the presence of the middle term in (5.33) would contribute to a lower value of α and therefore a greater W_{max}, quite according to intuition. If work can be extracted both by heat interaction and by equalizing pressures in the system, then the maximal amount of extractable work cannot fall short of the similar amount obtainable if only one of these alternatives were avialable.

It is also clear that a higher positive $\hat{S}$ in (5.33) contributes to a higher temperature, and that reversible heat engines

would provide the ideal maximal work output. Hence the *exergy potential* of the system will be:

$$E = \sum_{i=0}^{N} (U_i(T_i^0) - U_i(G^{-1}(\sum_{j=0}^{N} (G_j(T_j^0) + \log \left(\frac{n V_j^0}{n_j V}\right)^{n_j R}))) \tag{5.37}$$

Up to now, all sources have been treated symmetrically and it is evident from inspection that the expressions derived in (5.35) and (5.37) are symmetric functions of the source properties (T_i^0, V_i^0, n_i). We now investigate the effects of increasing source 0 infinitely, giving it the interpretation of an environment. This process will be somewhat more involved in the present model as compared with the one in section (4.2). The reason for this is that if only the number of moles n_0 of source 0 were increased, then the volume of this source would either have to be increased indefinitely or its temperature decreased to zero, according to the universal gas law (5.2), if its pressure is to be kept at a finite level.

For our purpose, it appears more natural to choose a case with an infinite volume, and finite, non-zero values of pressure and temperature, rather than an environment of zero temperature or of limited volume and infinite pressure. We therefore choose a process in which n_0, c_0 and V_0^0 tend towards infinity, which also implies that n as well as $\hat{V}$ increase beyond all bounds. From (5.2) we thus have:

$$V_0^0 = \frac{RT_0^0}{a_0^0} n_0 \tag{5.38}$$

where T_0^0 and a_0^0 are initial temperature and initial pressure of the environment, to be kept finite, and where n_0 and therefore V_0^0 tend towards infinity. Also the heat capacity of source 0 tends towards infinity, which we write:

$$c_0 = \hat{c}_0 \, n_0 \tag{5.39}$$

where $\hat{c}_0$ is the molar heat capacity assumed to be kept finite.

We now take a look at (5.33) in order to study the behaviour of α as n_0 tends to infinity. The middle term of the argument obtains the following limits:

$$\lim_{n_0 \to \infty} \log \frac{n V_i^0}{n_i V} = \begin{cases} R \sum_{j=1}^{N} \left(n_j - \frac{\alpha_0^0}{R T_0^0} V_j^0 \right) , & i = 0 \\ R \log \left(\frac{V_i^0 \alpha_0^0}{R T_0^0 n_i} \right)^{n_i} , & i \geq 1 \end{cases} \tag{5.40}$$

where we have used l'Hôpital's rule in the case of $i = 0$, since the term behaves as $\infty \cdot 0$. Hence the middle and third term $\hat{S}$ in (5.33) are finite in the limit. Using the representation in (5.32), the first sum will be kept finite only if $\alpha \to T_0^0$, due to the term:

$$G_i(\alpha) - G_i(T_0^0) = n_0 \int_{T_0^0}^{\alpha} \frac{\hat{c}_0 \, dT_0}{T_0} \tag{5.41}$$

which obviously requires $\lim_{n_0 \to \infty} \alpha = T_0^0$. Therefore (5.32) will behave according to the following formula as $n_0 \to \infty$:

$$\lim_{n_0 \to \infty} n_0 \int_{T_0^0}^{\alpha} \frac{\hat{c}_0}{T_0} dT_0 + \sum_{i=1}^{N} \left(G_i(T_0^0) - G_i(T_i^0) - R\left(n_i - \frac{\alpha_0^0 V_i^0}{R T_0^0}\right) + \right.$$

$$\left. + \log \left(\frac{V_i^0 \alpha_0^0}{R T_0^0 n_i} \right)^{n_i} \right) - \hat{S} = 0 \tag{5.42}$$

In this expression the first term behaves as $\lim_{n_0 \to \infty} \hat{c}_0 n_0 (\alpha - T_0^0)/T_0^0$.

and in (5.35) the first term as $\lim_{n_0 \to \infty} \hat{c}_0 n_0 (T_0^0 - \alpha)$. Therefore, in the limit we have the following maximum work output:

$$\lim_{n_0 \to \infty} W_{max} = \sum_{i=1}^{N} (U_i(T_i^0) - U_i(T_0^0) +$$

$$+ T_0^0 (G_i(T_0^0) - G_i(T_i^0) - Rn_i (1 - \frac{\alpha_0^0 V_i^0}{RT_0^0 n_i} +$$

$$+ \log \frac{\alpha_0^0 V_i^0}{RT_0^0 n_i})) - T_0^0 \hat{S} \tag{5.43}$$

The formulae may be simplified somewhat by noting that all specific volumes V_i^*/n_i are the same at the final state. For the environment we have the constant specific volume:

$$\lim_{n_0 \to \infty} \frac{V_0^0}{n_0} = \frac{RT_0^0}{\alpha_0^0} \tag{5.44}$$

Using this relation, (5.43) becomes:

$$\lim_{n_0 \to \infty} W_{max} = \sum_{i=0}^{N} (U_i(T_i^0) - U_i(T_0^0) - T_0^0(G_i(T_0^0) -$$

$$- G_i(T_i^0) - Rn_i(1 - \frac{v_i^0}{v_0^0} - \log \frac{v_i^0}{v_0^0}))) - T_0^0 \hat{S} \tag{5.45}$$

where v_i^0 denotes the initial molar volume of source i. In the special case of constant heat capacities we have $U_i = \hat{c}_i n_i T_i$

and therefore, for an infinite environment:

$$\lim_{n_0 \to \infty} W_{max} = T_0^0 \left(\sum_{i=1}^{N} n_i \left(\hat{c}_i \left(\frac{T_i^0}{T_0^0} - 1 - \log \frac{T_i^0}{T_0^0} + \right.\right.\right.$$

$$\left.\left.\left. + R \left(\frac{v_i^0}{v_0^0} - 1 - \log \frac{v_i^0}{v_0^0} \right) \right) \right) - T_0^0 \hat{S} =$$

$$= T_0^0 \sum_{i=1}^{N} n_i \left(\hat{c}_i \, g\left(\frac{T_i^0}{T_0^0}\right) + Rg\left(\frac{v_i^0}{v_0^0}\right) \right) - T_0^0 \hat{S} \tag{5.46}$$

and:

$$\lim_{n_0 \to \infty} E = T_0^0 \sum_{i=1}^{N} n_i \left(\hat{c}_i g\left(\frac{T_i^0}{T_0^0}\right) + Rg\left(\frac{v_i^0}{v_0^0}\right) \right). \tag{5.47}$$

where $g(x) = x - 1 - \log x$ is the *exergy function*, cf figure 4.2. When there is but one source apart from the environment, the last two formulae become:

$$\lim_{n_0 \to \infty} W_{max} = T_0^0 n_1 \left(\hat{c}_1 g\left(\frac{T_1^0}{T_0^0}\right) + Rg\left(\frac{v_1^0}{v_0^0}\right) \right) - T_0^0 \hat{S} \tag{5.48}$$

$$\lim_{n_0 \to \infty} E = T_0^0 n_1 \left(\hat{c}_1 g\left(\frac{T_1^0}{T_0^0}\right) + Rg\left(\frac{v_1^0}{v_0^0}\right) \right) \tag{5.49}$$

This last expression is found in literature, e g in [Eriksson, et al, 1978] and was derived differently also in section 3.2.

Reverting to the symmetric case with all sources finite, we investigate into the relationships valid in the case of constant heat capacities. With constant values of $c_i = \hat{c}_i n_i$, (5.33) may be written out explicitly:

$$\alpha = \prod_{i=0}^{N} T_i^{0\, c_i/c} \left(\frac{V_i n}{V n_i}\right)^{R n_i/c} e^{\hat{S}/c} \tag{5.50}$$

where $c = \sum_{j=0}^{N} n_j \cdot \hat{c}_j$, which shows the final temperature to be a geometrical average of the initial temperatures corrected by a factor depending on initial specific volumes divided by final specific volumes and by a factor taking account of the total entropy production in all heat engines involved. The maximal work output and exergy potential in this case are:

$$W_{max} = \sum_{i=0}^{N} c_i (T^0 - \alpha) \tag{5.51}$$

$$E = \sum_{i=0}^{N} c_i (T_i^0 - \alpha_0) \tag{5.52}$$

where α_0 is the value of α according to (5.50) for $\hat{S} = 0$.

In order to study the effect of changes in parameters on the exergy potential, we differentiate (5.33), which yields:

$$\sum_{i=0}^{N} c_i \frac{\delta\alpha}{\alpha} = \sum_{i=0}^{N} \left(c_i \frac{\delta T_i^0}{T_i^0} + R n_i \left(\frac{\delta V_i^0}{V_i^0} - \frac{\delta \hat{V}}{\hat{V}}\right)\right) + \delta\hat{S} \tag{5.53}$$

For an isolated change in V_i^0 by δV_i^0 and a simultaneous change $\delta\hat{V}$ by the same amount we obtain a change in α in the same direction, since $V_i^{0-1} > \hat{V}^{-1}$. Therefore volume increases have an adverse effect on the exergy potential, since the final temperature then increases. If, on the other hand, $\hat{V}$ is kept constant and an increase in V_i^0 by δV_i^0 is compensated for by a decrease in V_j^0 by $\delta V_j^0 = -\delta V_i^0$, we obtain that $\delta\alpha > 0$ when $n_i V_i^{0-1} < n_j V_j^{0-1}$ and $\delta\alpha < 0$ in the opposite case. Therefore an increase in a volume with a small specific volume combined with a decrease in a large volume with a high specific volume will decrease exergy and vice versa.

An isolated change in one single initial temperature T_i^0 by δT_i^0 changes α by $\delta\alpha/\alpha = (\partial_i/\partial)\delta T_i^0/T_i^0$ and E by:

$$\delta E = (1-\alpha T_i^{0-1})\ \delta T_i^0 \tag{5.54}$$

E will therefore increase in T_i^0 when T_i is above its geometrical average and decrease when it is below this average, exactly as in section (4.2). A large number of other effects of parameter changes are possible to analyze, but are omitted.

5.4 Exergy potential of more general systems of sources

As a final case we investigate a system, the $(N+1)$ elements of which are characterized by a number of different properties. To the jth element, $j = 0,1,\ldots,N$, is associated an internal energy U_j which is a function of its entropy S_j, its volume V_j its molar contents n_{ij}, $i = 1,2,\ldots,M$, assuming M different substances, its electrical charge q_j and its extent of a possible chemical reaction z_j. For an element of this kind Gibbs' fundamental equation takes on the form [Yourgrau, et al, 1966, p 14]:

$$T_j dS_j = dU_j + \alpha_j dV_j - \sum_{i=1}^{M} \mu_{ij} dn_{ij} - \phi_j dq_j + \nu_j dz_j \tag{5.55}$$

where α_j is pressure, μ_{ij} chemical potential with respect to substance i, ϕ_j electric potential and ν_j affinity of the chemical reaction.

A chemical reaction would of course change the number of moles of different substances, meaning that the n_{ij} and the z_j would depend on one another. In (5.55), however, we let the dn_{ij} denote changes in molar contents due to the exchange (and flow) of matter, the sum of such changes for each particular substance being zero, whereas molar changes due to reactions are covered by the dz_j. A different formal treatment would have been to in clude both kinds of changes in the dn_{ij} differentials alone. In such a case, if only changes due to a chemical reaction were to occur, we have $dn_{ij} = \zeta_{ij} dz_j$ where ζ_{ij} is the *stoichiometric coefficient* of substance i (describing the number of moles participating in an elementary reaction, negative numbers for the reactants and positive for the products) and the affinity then will be $\nu_j = -\sum_{i=1}^{M} \zeta_{ij} \mu_{ij}$, cf [Yourgrau, op cit, pp 245-246, Wilson, A H, 1957, pp 370 ff]. With this interpretation the third and fifth terms in (5.55) would coincide, making one of them superfluous. However, in such an approach, there would be net changes in the total molar contents of certain substances which would make our constraints more complicated. Therefore we have preferred to distinguish between the two types of changes in the molar numbers.

The intensive properties in (5.55) are interpreted as the derivatives:

$$\frac{\partial U_j}{\partial S_j} = T_j \tag{5.56}$$

$$\frac{\partial U_j}{\partial V_j} = - a_j \tag{5.57}$$

$$\frac{\partial U_j}{\partial n_{ij}} = \mu_{ij} \quad , \quad i=1,2,\ldots M \tag{5.58}$$

$$\frac{\partial U_j}{\partial q_j} = \phi_j \tag{5.59}$$

$$\frac{\partial U_j}{\partial z_j} = - \nu_j \tag{5.60}$$

The number of extenxive properties of each element is therefore $(M+4)$ and the total number of properties necessary for determining the state of the system is $(N+1)(M+4)$.

We investigate the problem of maximizing the amount of work to be extracted W, subject to the conditions that the extraction processes generate entropy amounting to the internal irreversible generation $d\hat{S}_j$ concerning source j, $j = 0, 1,\ldots,N$, that the total volume is given and constant $\hat{V}$, that the molar contents of each substance (element) are given by n_i, $i = 0, 1,\ldots,M$, that the total charge is given by $\hat{q}$ and that the total extent of chemical reaction is given by $\hat{z}$. The work extracted must be equal to a corresponding decrease in total internal energy:

$$dW = - \sum_{j=0}^{N} dU_j \tag{5.61}$$

the integral of which is to be maximized subject to the constraints:

$$\sum_{j=0}^{N} dS_j \geq \sum_{j=0}^{N} d\hat{S}_j = d\hat{S} \tag{5.62}$$

where $d\hat{S}$ is an abbreviation for the total entropy production, and:

$$\sum_{j=0}^{N} V_j = \hat{V} \tag{5.63}$$

$$\sum_{j=0}^{N} n_{ij} = \hat{n}_i \quad , \quad i=1,2,\ldots,M \tag{5.64}$$

$$\sum_{j=0}^{N} q_j = \hat{q} \tag{5.65}$$

$$\sum_{j=0}^{N} z_j = \hat{z} \tag{5.66}$$

By forming the Lagrangean:

$$L = \int_0^{\infty} \sum_{j=0}^{N} (-\dot{U}_j + \alpha\dot{S}_j - \beta\dot{V}_j + \sum_{i=1}^{M} \gamma_i \dot{n}_{ij} + \lambda\dot{q}_j - \varepsilon\dot{z}_j)\, dt \tag{5.67}$$

where $\alpha, \beta, \gamma_i, \lambda$ and ε are multipliers, and the associated Hamiltonian:

$$H = \sum_{j=0}^{N} ((\alpha - \frac{\partial U_j}{\partial S_j})\dot{S}_j - (\beta + \frac{\partial U_j}{\partial V_j})\dot{V}_j + \sum_{i=1}^{M} (\gamma_i - \frac{\partial U_j}{\partial n_{ij}})\dot{n}_{ij} +$$

$$+ (\lambda - \frac{\partial U_j}{\partial q_j})\dot{q}_j - (\varepsilon - \frac{\partial U_j}{\partial z_j})\dot{z}_j \tag{5.68}$$

we obtain the necessary maximization conditions:

$$\frac{\partial H}{\partial S_j} - \frac{d}{dt}\frac{\partial H}{\partial \dot{S}_j} = -\dot{\alpha} = 0 \tag{5.69}$$

$$\frac{\partial H}{\partial V_j} - \frac{d}{d\tau}\frac{\partial H}{\partial \dot{V}_j} = \dot{\beta} = 0 \tag{5.70}$$

$$\frac{\partial H}{\partial n_{ij}} - \frac{d}{d\tau}\frac{H}{\dot{n}_{ij}} = -\dot{\gamma}_i = 0 \tag{5.71}$$

$$\frac{\partial H}{\partial q_j} - \frac{d}{d\tau}\frac{\partial H}{\partial \dot{q}_j} = -\dot{\lambda} = 0 \tag{5.72}$$

$$\frac{\partial H}{\partial z_j} - \frac{d}{d\tau}\frac{\partial H}{\partial \dot{z}_j} = \dot{\varepsilon} = 0 \tag{5.73}$$

As in our previous models, these conditions imply that all multipliers are constants and therefore that the integrand in (5.67) is an exact differential. Thus L will be independent of the path by which the final state is reached:

$$L = \sum_{j=0}^{N} ((U_j^0 - U_j^*) + \alpha(S_j^* - S_j^0 - \hat{S}_j) - \beta(V_j^* - \hat{V}(N+1)^{-1}) +$$

$$+ \sum_{i=1}^{M} \gamma_i (n_{ij}^* - \hat{n}_i (N+1)^{-1}) + \lambda(q_j^* - \hat{q}(N+1)^{-1}) -$$

$$- \varepsilon(z_j^* - \hat{z}(N+1)^{-1})) \tag{5.74}$$

where, as before, zero superscripts denote initial states and asterisks denote final states, $\hat{S}_j$ being the total minimal entropy production of element j. The following Kuhn-Tucker conditions are then obtained:

$$\frac{\partial L}{\partial S_j^*} = \alpha - \frac{\partial U_j^*}{\partial S_j^*} = -T_j^* + \alpha = 0 \tag{5.75}$$

$$\frac{\partial L}{\partial V_j^*} = -\beta - \frac{\partial U_j^*}{\partial V_j^*} = -\beta + \alpha_j^* = 0 \tag{5.76}$$

$$\frac{\partial L}{\partial n_{ij}^*} = \gamma_i - \frac{\partial U_j^*}{\partial n_{ij}^*} = \gamma_i - \mu_{ij}^* = 0 \quad , \quad i=1,2,\ldots,M \tag{5.77}$$

$$\frac{\partial L}{\partial q_j^*} = \lambda - \frac{\partial U_j^*}{\partial q_j^*} = \lambda - \phi_j^* = 0 \tag{5.78}$$

$$\frac{\partial L}{\partial z_j^*} = -\varepsilon - \frac{\partial U_j^*}{\partial z_j^*} = -\varepsilon + \nu_j^* = 0 \tag{5.79}$$

where we have interpreted the derivatives in the middle members according to (5.56) - (5.60). Also we have the additional conditions:

$$\frac{\partial L}{\partial \alpha} = \sum_{j=0}^{N} (S_j^* - S_j^0 - \hat{S}_j) \geq 0 \tag{5.80}$$

$$\frac{\partial L}{\partial \beta} = \hat{V} - \sum_{j=0}^{N} V_j^* = 0 \tag{5.81}$$

$$\frac{\partial L}{\partial \gamma_i} = \sum_{j=0}^{N} n_{ij}^* - \hat{n}_i = 0 \quad , \quad i=1,2,\ldots,M \tag{5.82}$$

$$\frac{\partial L}{\partial \lambda} = \sum_{j=0}^{N} q_j^* - \hat{q} = 0 \tag{5.83}$$

$$\frac{\partial L}{\partial \varepsilon} = \hat{z} - \sum_{j=0}^{N} z_j^* = 0 \tag{5.84}$$

where a strict inequality in (5.80) would imply $\alpha = 0$. Quite as expected we find from (5.75) - (5.79) that all elements must share their intensive property values at the final state.

Since $T_j^* > 0$, we have $\alpha > 0$ implying an equality in (5.80) meaning, as before, that the total entropy generated is the least possible. Hence, all final temperatures are equal, all pressures are equal, all chemical potentials of the same substance are equal, all electrical potentials are equal and all reaction extents are equal. The multipliers are also directly interpreted as these variables respectively.

By adjusting the given parameters, we find the work extraction to change by:

$$\delta W_{max} = -\alpha \sum_{j=0}^{N} \delta\hat{S}_j + \beta\delta\hat{V} - \sum_{i=1}^{M} \gamma_i \delta\hat{n}_i -$$

$$- \lambda\delta\hat{q} + \varepsilon\delta\hat{z} \tag{5.85}$$

Since $\alpha > 0$, W_{max} will increase when the entropy generated is made to decrease and vice versa. This does not mean, however, that W_{max} is linear in entropy, since α also will depend on parameters given. The exergy potential is therefore obtained when solving (5.75) - (5.84) with $\hat{S}_j = 0$ for all j.

The following set of equalities implicitly provides optimal values of the state variables:

$$\frac{\partial U_j^*}{\partial S_j^*} = \frac{\partial U_k^*}{\partial S_k^*} \quad , \quad for\ all\ j,k \tag{5.86}$$

$$\frac{\partial U_j^*}{\partial V_j^*} = \frac{\partial U_k^*}{\partial V_k^*} \quad , \quad for\ all\ j,k \tag{5.87}$$

$$\frac{\partial U_j^*}{\partial n_{ij}^*} = \frac{\partial U_k^*}{\partial n_{ik}^*} \quad , \quad for\ all\ i,j,k \tag{5.88}$$

$$\frac{\partial U_j^*}{\partial q_j^*} = \frac{\partial U_k^*}{\partial q_k^*} \quad , \text{ for all } j,k \tag{5.89}$$

$$\frac{\partial U_j^*}{\partial z_j^*} = \frac{\partial U_k^*}{\partial z_k^*} \quad , \text{ for all } j,k \tag{5.90}$$

These equations for $j \neq k$ together with (5.80) - (5.84) are altogether $(N+1)(M+4)$ in number and, in general, would provide sufficient information for solving for the unknown final state given by the same number of variables. It is clear that this solution is in complete accordance with the symmetry principle, since the system of equations are invariant with respect to any permutation of the element indices.

With the final state known, the maximum work output will be:

$$W_{max} = \sum_{j=0}^{N} (U_j(S_j^0, V_j^0, n_{1j}^0, \ldots, n_{Mj}^0, q_j^0, z_j^0) -$$

$$- U_j(S_j^*, V_j^*, n_{1j}^*, \ldots, n_{Mj}^*, q_j^*, z_j^*)) \tag{5.91}$$

The exergy potential Ξ is given by the same equation for the particular case that $\sum_{j=0}^{N} \hat{S}_j = 0$ in (5.80).

Let us also note that $\frac{\partial W_{max}}{\partial \hat{V}} = \beta > 0$ according to (5.85), which would indicate that an autonomous expansion of the universe would continuously provide new opportunities to extract useful work. Therefore, from an overall cosmological standpoint, with an expanding universe energy might not be a scarce resource.

Let us now study the effects of making one of the $(N+1)$ elements, say element 0, infinite in its extensive properties thus departing from the symmetry principle. This will mean that its intensive properties T_0, α_0, μ_{i0}, ϕ_0 and ν_0 will keep their values constant when this element interacts with other elements. These intensive properties of the environment will therefore also coincide with the values of the multipliers. When these properties are known, the optimal final state of all other elements $(j \geq 1)$ will be determined by:

$$\frac{\partial U_j^*}{\partial S_j^*} = T_0 \quad , \quad j \geq 1 \tag{5.92}$$

$$\frac{\partial U_j^*}{\partial V_j^*} = -\alpha_0 \quad , \quad j \geq 1 \tag{5.93}$$

$$\frac{\partial U_j^*}{\partial n_{ij}^*} = \mu_{i0} \quad , \quad j \geq 1, \; i = 1,2,\ldots,M \tag{5.94}$$

$$\frac{\partial U_j^*}{\partial q_j^*} = \phi_0 \quad , \quad j \geq 1 \tag{5.95}$$

$$\frac{\partial U_j^*}{\partial z_j^*} = -\nu_0 \quad , \quad j \geq 1 \tag{5.96}$$

Solving these $N(M+4)$ equations for the same number of unknowns would provide us with a partial solution, namely the final extensive properties S_j^*, V_j^*, n_{ij}^*, q_j^*, z_j^*, for $i = 1,2,\ldots,M$, $j = 1,2,\ldots,N$. At this state all elements will be in equilibrium with one another and with the environment. This will provide us with sufficient information to compute the differences in U_j in (5.91) for $j \geq 1$. The remaining term for $j = 0$, however,

behaves like $\infty - \infty$ when the environment is made infinite. Let us therefore write this difference as the integral:

$$U_0^0 - U_0^* = \int_{\substack{\text{initial}\\\text{state}\\\text{final}\\\text{state}}} dU_0 = \int_{\substack{\text{initial}\\\text{state}\\\text{final}\\\text{state}}} \left(\frac{\partial U_0}{\partial S_0} dS_0 + \frac{\partial U_0}{\partial V_0} dV_0 + \right.$$

$$\left. + \sum_{i=1}^{M} \frac{\partial U_0}{\partial n_{i0}} dn_{i0} + \frac{\partial U_0}{\partial q_0} dq_0 + \frac{\partial U_0}{\partial z_0} dz_0 \right) =$$

$$= T_0(S_0^0 - S_0^*) - a_0(V_0^0 - V_0^*) + \sum_{i=1}^{M} \mu_{i0}(n_{i0}^0 - n_{i0}^*) +$$

$$+ \phi_0(q_0^0 - q_0^*) - \nu_0(z_0^0 - z_0^*) \tag{5.97}$$

where we have used the fact that (5.86) - (5.90) also must be satisfied for $j = 0$. From (5.80) - (5.84) we may solve for the differences obtained and insert these into (5.97). This provides us with the following expression for W_{max}:

$$W_{max} = \sum_{j=1}^{N} (U_j^0 - U_j^*) + T_0\left(\sum_{j=1}^{N} (S_j^* - S_j^0 - \hat{S}\right) -$$

$$- a_0 \sum_{j=1}^{N} (V_j^* - V_j^0) + \sum_{i=1}^{M} \mu_{i0} \sum_{j=1}^{N} (n_{ij}^* - n_{ij}^0) +$$

$$+ \phi_0 \sum_{j=1}^{N} (q_j^* - q_j^0) - \nu_0 \sum_{j=1}^{N} (z_j^* - z_j^0) =$$

$$= \sum_{j=1}^{N} U_j^0 - T_0 \sum_{j=1}^{N} S_j^0 + a_0 \sum_{j=1}^{N} V_j^0 - \sum_{i=1}^{N} \mu_{i0} \sum_{j=1}^{N} n_{ij}^0 -$$

$$- \phi_0 \sum_{j=1}^{N} q_j^0 + \nu_0 \sum_{j=1}^{N} z_j^0 - T_0\hat{S} \tag{5.98}$$

where we have applied a generalized version of (2.87) and where $\hat{S}$ is the total entropy generation. The exergy potential is then obtained simply by setting $\hat{S} = 0$ omitting the last term, since the level of $\hat{S}$ cannot affect the solution to (5.92)-(5.96) and therefore neither affect any other term but this one. It is readily seen here that the term $T_0\hat{S}$ represents lost work due to irreversibilities and that this amount is proportional to $\hat{S}$ when the environment has infinite extension, which is not so in our former case consistent with the symmetry principle. Hence, with an infinite environment the exergy potential of the system is the sum of the exergy potential of each object (not counting the environment).

Finally, taking a more abstract look at the question of determining the exergy potential, we may envisage any system of sources as made up of $(N+1)$ elements each having its own set of M extensive state variables x_{ij}, $i = 1,2,\ldots,M$, $j = 0,1,\ldots,N$. If each element posesses an internal energy U_j depending on its current state, the elements will be in equilibrium at states satisfying:

$$\frac{\partial U_j}{\partial x_{ij}} = \frac{\partial U_k}{\partial x_{ik}} \quad , \quad \text{for all } i,j,k \tag{5.99}$$

The limitations of the system and the processes available might be given in the form:

$$\sum_{j=0}^{N} (x^*_{ij} - x^0_{ij}) - \hat{x}_i = 0 \quad , \quad \text{for all } i \tag{5.100}$$

where $\hat{x}_i$ are given parameters (cf (5.62)-(5.66)). Since the x_{ij} are extensive properties, for an isolated system we would have $\hat{x}_i = 0$, except possibly for the index corresponding to entropy, and when all processes take place reversibly also this $\hat{x}_i$ would be zero-valued. Equations (5.96) - (5.97) contain altogether $M(N+1)$ independent equations implicitly determining the values x^*_{ij} and thereby also determining:

$$N_{max} = \sum_{j=0}^{N} (U_j^0 - U_j^*) \tag{5.101}$$

The exergy potential would be obtained by interpreting for one index i of the variables x_{ij} as this set of variables being entropy and requiring the corresponding parameters $\hat{x}_{ij}$ to be zero.

The asymmetric case of letting extensive properties of element 0 tend towards infinity is omitted since its derivation would exactly follow that of our previously described case.

With the generalizations given above, the results may be interpreted quite generally. For instance, if magnetic force fields are to be included among the intensive properties, internal energy obeys the differential equations [Holman, 1969, pp 181-182]:

$$dU = TdS + \mu_0 HVdM \tag{5.102}$$

where H is the magnetic density of the external field, M the magnetic dipole moment and μ_0 the magnetic permeability of free space. Obviously one of the x_{ij}-variables in our treatment then may be interpreted as S and the other as M.

5.5 Proof that exergy depends on changes in environmental intensive properties

In this section we include a proof that the exergy potential of an N-element system with a finite environment, in general cannot be obtained simply by replacing the intensive properties in the expression for the constant environment case by the similar equilibrium intensive properties in the non-constant environment case. This means that formulae of the type (5.98) or (3.53) in general are only applicable to cases with an infinite constant environment. This, of course, does not limit the

applicability of the exergy concept as has been shown in several non-constant environment cases treated.

Consider an N-element system with an invironment, the properties of which are denoted by zero subscripts. Together these are isolated with the exception of work being extracted. The internal energy U_j of each element j and the environment $j = 0$ are given linear homogeneous functions of M extensive properties x_{ij}, $i = 1, 2, \ldots, M$:

$$U_j = \sum_{i=1}^{M} \frac{\partial U_j}{\partial x_{ij}} (x_{ij})\, x_{ij} = \sum_{i=1}^{M} y_{ij} x_{ij} \quad , \quad j = 0, 1, \ldots, N \tag{5.103}$$

where the y_{ij} are abbreviations for the intensive properties $\frac{\partial U_j}{\partial x_{ij}}$. At the final equilibrium state, denoted by asterisks we know from (5.99) that $y^*_{ij} = y_i$ is independent of j (all intensive properties of the same kind are equal). As before we use zero superscripts to denote initial values. Let us denote the exergy function according to the constant environment formula by $\bar{E}$ and according to the general treatment in the preceding section by E. Thus according to the generalized version of (5.98) we have:

$$\bar{E} = \sum_{j=1}^{N} U_j^0 - \sum_{i=1}^{M} y_i^* \sum_{j=1}^{N} x_{ij}^0 \tag{5.104}$$

and according to (5.101):

$$E = \sum_{j=0}^{N} (U_j^0 - U_j^*) \tag{5.105}$$

Also, since the system including its environment is isolated and since all processes are reversible, when determining its exergy potential:

$$\sum_{j=0}^{N} (x_{ij}^{0} - x_{ij}^{*}) = 0 \qquad , \; i = 1,2,\ldots,M \tag{5.106}$$

Taking the difference between (5.105) and (5.104) and using (5.103) and (5.106) gives us:

$$E - \bar{E} = U_0^0 - \sum_{i=1}^{M} y_i^* \sum_{j=0}^{N} x_{ij}^* + \sum_{i=1}^{M} y_i^* \sum_{j=1}^{N} x_{ij}^0 =$$

$$= \sum_{i=1}^{M} (y_{i0}^0 - y_i^*)\, x_{i0}^0 \tag{5.107}$$

Hence, when the initial intensive properties of the environment y_{i0}^0 differ from the corresponding equilibrium properties y_i^* in the general case we would have $E \neq \bar{E}$. If positive and negative terms in the sum were to cancel each other, this would be a mere improbable concidence. Also we know for certain, that in the one-element case there would be only one term present, preventing any possibility of cancellations.

5.6 Concluding remarks

From the discussion in section 2.7, it is clear that entropy production is inversely related to the time of duration of the extraction process (or rather, the speed of the process). This implies that W_{max} is positively related to this time of duration. An overall optimization would require a balance to be struck between the amount of work extracted and the time this would be allowed to take. If t denotes the time of extraction, we have $\hat{S} = \hat{S}(t)$ and $W_{max} = W_{max}(\hat{S})$. Essentially we therefore might view an extended problem to be to maximize W subject to a maximum value of t. The sensitivity of W_{max} to a *change* in the choice of t would be given by:

$$\frac{dW_{max}}{dt} = \frac{dW_{max}}{d\hat{S}} \cdot \frac{d\hat{S}}{dt} \tag{5.108}$$

which in the case of an infinite environment reduce to:

$$\frac{dW_{max}}{dt} = - T_0 \frac{d\hat{S}}{dt} \tag{5.109}$$

Some thoughts along similar lines are given in [Andresen, et al, 1977, Salamon, et al, 1977], cf also [Weinberg, 1978, p 154, and Odum, Pinkerton, 1955]. Of particular interest are the basic relationships derived in [Eriksson, et al, 1976, pp IV.1-IV.2] concerning a minimum possible entropy production rate and the corresponding minimum exergy destruction rate for a simple conversion process, the latter rate given by $T_0\hat{S} = \chi_0(\dot{E})^2$, where χ_0 is a constant and $\dot{E}$ the exergy power converted (cf (2.21)). Hence, at the level $\dot{E} = \chi_0^{-1}$, we would find that all exergy converted is used up in the process itself, and that the net exergy power would take on its maximum $\chi_0^{-1}/4$ at the gross level $\dot{E} = \chi_0^{-1}/2$ (half is then conserved, half destructed). It certainly appears essential for future research in this area to study the actual entropy generation processes and to find relations of the type $\hat{S}(t)$.

CHAPTER 6. EXERGY POTENTIAL OF RADIATION

6.1. Introduction

In this chapter we shall develop some expressions for the potential amount of work that may be extracted from incoming electromagnetic radiation reaching a collector in which it is absorbed.

Due to the increasing interest in solar energy utilization, it should be of importance to carry out deeper analyses in this area. As yet however, the topic of an exergetic (or entropic) analysis of radiation appears to have gained little interest in literature with a few exceptions [Thoma, 1978, Grümm, 1978].

Our treatment to follow will be brief and elementary in nature. Our objective is to point out some possible lines of thought, rather than to present models that presume to be complete or final in any sense. The originality of the ideas presented below has not been examined.

6.2. Basic concepts and relationships

Central concepts in the theory of radiation are *absorptivity* α, *reflexivity* ρ and *transmittivity* τ. Radiation meeting a surface may be absorbed or reflected by the surface, or transmitted through the surface. The absorbtivity measures the fraction of the radiation that is absorbed, reflexivity the fraction reflected and transmittivity the fraction transmitted. The first law (the energy principle) therefore requires:

$$\alpha + \rho + \tau = 1 \tag{6.1}$$

For a perfectly *opaque surface* we have $\tau = 0$ and for a *black body* $\alpha = 1$, $\rho = \tau = 0$.

A surface with a non-zero temperature emits radiation. This emission is described by the *emissive power* or *radiancy* R of the surface, measuring the total energy emitted in all directions from the surface per time unit and per unit of area. Since the emission usually covers a range of frequencies ν or wavelengths λ, the product of which is the velocity of light in vacuum $c = \lambda\nu$, the radiancy wavelength distribution $R_\lambda d\lambda$ explaining the fraction of radiancy in the interval $[\lambda, \lambda + d\lambda]$, is of interest. We therefore have:

$$R = \int_0^\infty R_\lambda d\lambda \tag{6.2}$$

In a general case, R_λ will depend on λ, on surface temperature T, on the direction of emission and on surface material characteristics. For a black surface we denote its radiancy distribution $R_{b\lambda}$, which depends only on λ and according to *Planck's energy density law* [Jenkins, White, 1975, p 434] is given by:

$$R_{b\lambda} d\lambda = b_1 \lambda^{-5} \left(e^{\frac{b_2}{\lambda T}} - 1\right)^{-1} d\lambda \tag{6.3}$$

in which appears the two constants:

$$b_1 = 3.7413 \cdot 10^{-16} \ [Wm^2] \tag{6.4}$$

$$b_2 = 1.4388 \cdot 10^{-2} \ [mK] \tag{6.5}$$

where the value of b_1 assumes λ to be measured in m. Integrating (6.3) yields *the black body radiancy:*

$$R_b = \int_0^\infty \frac{b_1}{\lambda^5} \left(e^{\frac{b_2}{\lambda T}} - 1\right)^{-1} d\lambda = \sigma T^4 \tag{6.6}$$

which is the *Stefan-Bolzmann law* and where σ is the *Stefan-Bolzmann constant:*

$$\sigma = 5.669 \cdot 10^{-8} \; [Wm^{-2}K^{-4}] \tag{6.7}$$

The *emissivity* $\varepsilon_\lambda(T)$ of a surface is defined as the ratio between its own radiancy distribution and that of a black body having the same temperature:

$$\varepsilon_\lambda(T) = R_\lambda(T)/R_{b\lambda}(T) \tag{6.8}$$

Apart from temperature and wavelength (frequency), the emissivity in general also depends on direction and material characteristics.

By definition $\varepsilon_\lambda(T)$ is identically unity for a black body, and no other surface exceeds this value. For a theoretical *grey* surface, its emissivity has a constant value $\varepsilon \leq 1$ and for a diffuse surface $\varepsilon_\lambda(T)$ is the same in all directions. The radiancy of a surface may therefore be computed as:

$$R = \int_0^\infty \varepsilon_\lambda(T) \; R_{b\lambda}(T) \; d\lambda = \varepsilon\sigma T^4 \tag{6.9}$$

where the right-hand member holds for a grey surface.

For any surface, according to *Kirchoff's law* the absorptivity and emissivity at any given temperature T are equal:

$$\alpha_\lambda(T) = \varepsilon_\lambda(T) \tag{6.10}$$

which applies in any direction.

6.3 Work and power extraction from radiation absorbed by a grey collector

Let us consider a collector surface facing a given incident radiation described by its known radiancy distribution $\hat{R}_\lambda d\lambda$. If the surface is opaque and has emissivity (and absorptivity) $\varepsilon_\lambda(T)$ at temperature T, the net radiancy absorbed will be:

$$\Delta R(T) = \int_0^\infty \varepsilon_\lambda(T)(\hat{R}_\lambda - R_{b\lambda})\, d\lambda \tag{6.11}$$

For a grey surface this becomes:

$$\Delta R(T) = \varepsilon(\hat{R} - \sigma T^4) \tag{6.12}$$

If the surface is cooled and the flow of heat leaving the surface is $\dot{Q}$ per time unit and its area is A, in equilibrium (no tendency for temperature changes) we must have:

$$A\varepsilon(\hat{R} - \sigma T^4) = \dot{Q} \tag{6.13}$$

which gives us the equilibrium temperature:

$$T^* = \sqrt[4]{(\hat{R} - \dot{Q}\,\varepsilon^{-1}\,A^{-1})\sigma^{-1}} \tag{6.14}$$

Obviously this temperature increases in the incoming radiancy $\hat{R}$ and emissivity ε and decreases with the level of cooling $\dot{Q}$. Therefore a black body gives a higher equilibrium temperature than any other grey surface.

For a neither grey nor black surface, the equilibrium temperature is determined implicity by:

$$\int_0^\infty A\varepsilon_\lambda(T)(\hat{R}_\lambda - R_{b\lambda}(T))\, d\lambda - \dot{Q} = 0 \tag{6.15}$$

In order to derive a first expression for the exergy potential of radiation in a simple case, we now assume that there is access to a finite body having a constant heat capacity c_0 and temperature T_0, and that a heat engine is inserted between a grey collector with the area A and this body, as is described in figure 6.1.

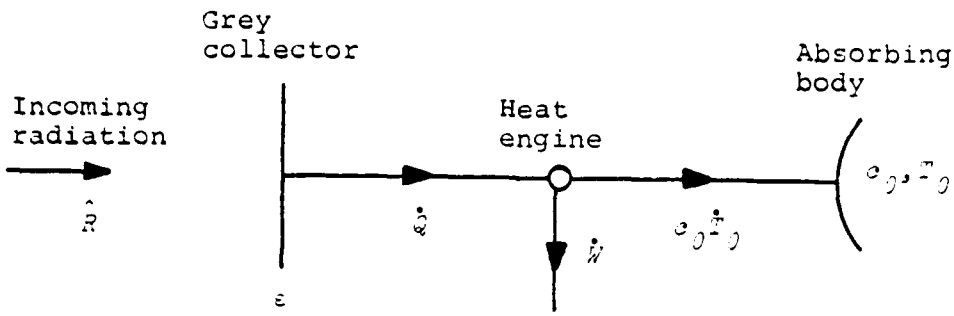

Figure 6.1. Heat engine inserted between collector and body

The net energy absorbed per time unit is:

$$\dot{Q} = A\varepsilon(\hat{R} - \sigma T^4) \tag{6.16}$$

where T is the temperature of the collector. We investigate how to choose T and for how long a time period t the engine is to be operated.

We therefore maximize:

$$W = \int_0^t (\dot{Q} - c_0\dot{T}_0)dt \tag{6.17}$$

subject to the entropy constraint:

$$-\frac{\dot{Q}}{T} + c_0\frac{\dot{T}_0}{T_0} = \dot{\hat{S}} \tag{6.18}$$

where $\dot{\hat{S}}$ is a given instantaneous rate of entropy production in the engine. The work W is to be maximized by a suitable choice of T, T_0 and t. We form the Lagrangean:

$$L = \int_0^t (\dot{Q} - c_0\dot{T}_0)dt + \int_0^t \alpha(-\frac{\dot{Q}}{T} + c_0\frac{\dot{T}_0}{T_0} - \dot{\hat{S}})dt \tag{6.19}$$

where α is a non-negative multiplier. The associated Hamiltonian is:

$$H = \dot{Q} - c_0\dot{T}_0 + \alpha(-\frac{\dot{Q}}{T} + c_0\frac{\dot{T}_0}{T_0} - \dot{\hat{S}}) \tag{6.20}$$

and the Euler-Lagrange conditions for an extremum become:

$$\frac{\partial H}{\partial T} - \frac{d}{dt}\frac{\partial H}{\partial \dot{T}} = \frac{\partial \dot{Q}}{\partial T}(1-\alpha) + \frac{\alpha Q}{T^2} - \dot{\alpha}\frac{\dot{Q}}{T} = 0 \tag{6.21}$$

$$\frac{\partial H}{\partial T_0} - \frac{d}{dt}\frac{\partial H}{\partial \dot{T}_0} = -\dot{\alpha}\frac{c_0}{T_0} = 0 \tag{6.22}$$

Therefore $\dot{\alpha}$ must be zero-valued thoughout the process and α constant. Eq (6.21) then implies that the optimal value of T must be constant, since $\dot{Q}$ depends only on T. By integrating (6.18) we find:

$$T_0 = T_0^0\, e^{(\int_0^t \dot{Q}T^{-1}dt + \hat{S})/c_0} =$$

$$= T_0^0\, e^{(\dot{Q}T^{-1}t + \hat{S})/c_0} \tag{6.23}$$

Therefore the work extracted as a function of time, may be written:

$$W = \dot{Q}t - c_0 T_0^0 (e^{(\dot{Q}T^{-1}t+\hat{S})/c_0} - 1) \tag{6.24}$$

If $T_0^0 < T$, it is easily seen that there must be a unique maximum in t determined by:

$$\frac{\partial W}{\partial t} = \dot{Q} - T_0^0(\dot{Q}T^{-1} + \dot{\hat{S}})e^{(\dot{Q}T^{-1}t + \hat{S})/c_0} = 0 \tag{6.25}$$

from which we obtain the optimal value of duration $t = t^*$:

$$t^* = \dot{Q}^{-1}\left(c_0 T \log \frac{T\dot{Q}}{T_0^0(\dot{Q}+T\dot{\hat{S}}^*)} - T\hat{S}^*\right) \tag{6.26}$$

where $\dot{\hat{S}}^*$ and $\hat{S}^*$ are evaluated at t^*. Inserting this expression into (6.24) yields the maximum work output:

$$W_{max}(T) = c_0 T\left(\frac{T_0^0}{T} - \frac{\dot{Q}}{\dot{Q}+\dot{S}^*T} + \log\frac{\dot{Q}T}{(\dot{Q}+\dot{S}^*T)T_0^0}\right) - T\hat{S}^* =$$

$$= c_0 T(g(T_0^0 T^{-1}) - g(\dot{Q}(\dot{Q}+\dot{S}^*T)^{-1})) - T\hat{S}^* \qquad (6.27)$$

where $g(\cdot)$ is the exergy function (cf figure 4.2) and where we find the usual lost work term $T\hat{S}^*$. Compared with the one source, infinite environment thermal system there appears here a second term also in the form of an exergy function, similar to the ideal gas case, but here it is negative. In the case of a constant entropy rate, we have $\hat{S}^* = \dot{S}^* t^* = \dot{S} t^*$, which combined with (6.26) gives us:

$$t^* = \frac{c_0 T}{\dot{Q} + \dot{S}T} \log \frac{\dot{Q}T}{(\dot{Q} + \dot{S}T)T_0^0} \qquad (6.28)$$

With this expression for the optimal duration, the maximum work output becomes:

$$W_{max}(T) = c_0 T \frac{\dot{Q}}{\dot{Q}+\dot{S}T}\, g\left(\frac{(\dot{Q}+\dot{S}T)T_0^0}{\dot{Q}T}\right) = c_0 T' g(T_0^0 T'^{-1}) \qquad (6.29)$$

where T' is an abbreviation for $T\dot{Q}(\dot{Q}+\dot{S}T)^{-1}$. If we compare our expressions in (6.27) and (6.29) with the corresponding ones for thermal systems, we find the environment temperature now to be interpreted as the operating temperature T in (6.27) or the temperature $T'(<T)$ in (6.29), where the lost work term has vanished, and the initial "body" temperature interpreted as the initial sink temperature T_0^0.

Since the function $W_{max}(T)$ according to (6.29) is unbounded in T for a reversible process $\dot{S} = 0$, the exergy potential would be obtained for the highest possible operating temperature in the collector, i e for:

$$T^* = \sqrt[4]{\hat{R}\sigma^{-1}} \qquad (6.30)$$

which is the temperature of the incoming radiation. Inserted into (6.29) with $\dot{S} = 0$, this gives us:

$$E = c_0 T^* g(T_0^0 T^{*-1}) \tag{6.31}$$

Differentiating E with respect to T_0^0 shows E to be a decreasing function of T_0^0 for initial values T_0^0 lower than T^*, just as expected.

Clearly, when $T = T^*$, this means that no incoming radiation is absorbed. However, the limit obtained in (6.31) is finite. This paradox is explained in the following way. When the temperature T is raised, the fraction of incoming radiation taken care of, $\dot{W}$, decreases towards zero. But at the same time the optimal duration of the process τ^* increases towards infinity. The time integral over the extracted power then approaches the finite value E although the integrand approaches zero.

Comparing (6.31) with the simplest case of a thermal system with one finite source and an infinite environment (4.44) shows that the two exergy potentials are equal when the radiation itself is interpreted as "the environment".

Proceeding to the case of an infinite body able to act as a sink for a heat engine coupled to a collector, we would then expect results similar to the case of two infinite sources treated in section 4.5. However, there will be a slight difference as is shown below. Our problem is to maximize the power output:

$$\dot{W} = \dot{Q} - \dot{Q}_0 \tag{6.32}$$

where Q_0 is the heat flow entering the sink from the engine, subject to the entropy constraint:

$$-\dot{Q}T^{-1} + \dot{Q}_0 T_0^{-1} \geq \dot{S} \tag{6.33}$$

where $\dot{\bar{S}}$ is a given minimal rate of entropy production and where $\dot{Q}$, as before, depends on the temperature of the collector according to (6.16). We choose T and $\dot{Q}_0$ as the two decision variables. Forming the Lagrangean:

$$L = \dot{W} - \dot{Q}_0 + \alpha(-\dot{Q}T^{-1} + \dot{Q}_0 T_0^{-1} - \dot{\bar{S}}) \tag{6.34}$$

and differentiating, the following necessary Kuhn-Tucker conditions for a maximal power output are obtained:

$$\frac{\partial L}{\partial T} = \frac{\partial \dot{Q}}{\partial T}(1-\alpha T^{-1}) + \alpha \dot{Q} T^{-2} = 0 \tag{6.35}$$

$$\frac{\partial L}{\partial \dot{Q}_0} = -1 + \alpha T_0^{-1} = 0 \tag{6.36}$$

$$\frac{\partial L}{\partial \alpha} = -\dot{Q}T^{-1} + \dot{Q}_0 T_0^{-1} - \dot{\bar{S}} \geq 0 \tag{6.37}$$

where $\alpha > 0$ would imply an equality in (6.37). If we require $\dot{W} > 0$, then we must have either $\dot{Q}, \dot{Q}_0 > 0$ or $\dot{Q}, \dot{Q}_0 < 0$, the latter case demanding a "sink temperature" T_0 in excess of the operating temperature T, which means that the collector acts as an emitter, i e a sink. We restrict ourselves to the former case. Since $\dot{Q}_0 > 0$, we have $\alpha = T_0$ from (6.36) which means that T_0 is the environmental temperature (and not T) and that we have equality in (6.37) and therefore a minimal entropy production. Also from (6.35) the following fifth-order polynomial equation with a single parameter is obtained determining the optimal collector temperature:

$$\frac{\partial L}{\partial T} = 4A\varepsilon T^3 \left(\frac{\hat{R}}{4\sigma T_0^4} \left(\frac{T_0}{T}\right)^5 + \frac{3}{4}\left(\frac{T_0}{T}\right) - 1 \right) = 0 \tag{6.38}$$

The expression within the parenthesis is monotonically increasing in the argument $T_0 T^{-1}$, it is negative for a small enough argument and positive for a large. Therefore there is a unique maximum with respect to T, denoted T^*, for any given T_0.

Eq (6.38) may be rewritten in the following way:

$$\frac{1}{4}\left(\frac{\hat{T}}{T^*}\right)^5 + \frac{3}{4}\left(\frac{\hat{T}}{T^*}\right) = \frac{\hat{T}}{T_0} \tag{6.39}$$

where $\hat{T} = \sqrt[4]{R\sigma^{-1}}$ is the temperature of the radiation. This form shows that the ratio between the temperature of the radiation and that of the environment $\hat{T}T_0^{-1}$ is a weighted average of $\hat{T}T^{*-1}$ and $(\hat{T}T^{*-1})^5$ illustrating that T^* is in the interval $[T_0, \hat{T}]$. Also we see that $\hat{T}T^{*-1}$ is a monotonically increasing function of $\hat{T}T_0^{-1}$.

It appears difficult to find a more explicit analytical expression for the solution, but a numerical solution has been computed and is given in figure 6.2.

Although the optimal operating temperature T^* is independent both of the emissivity ε and of the entropy production $\dot{\hat{S}}$, the maximal power output $\dot{W}_{max}(T^*)$ would not be so. The exergy of radiation must therefore be defined with respect to other characteristics of the system in which it is taken care of.

Also for $W_{max}(T^*)$ it would be difficult to obtain explicit expressions. From our basic equations (6.32)-(6.33) we have:

$$\dot{W}_{max}(T^*) = A\varepsilon(1-T_0T^{*-1})(\hat{R}-\sigma T^{*4}) - T_0\,\dot{\hat{S}} =$$

$$= A\varepsilon\sigma(1-T_0T^{*-1})(\hat{T}^4-T^{*4}) - T_0\,\dot{\hat{S}} \tag{6.40}$$

where T^* is given by (6.38) or (6.39). Although T^* is only given as an implicit function of T_0 and $\hat{T}$ we can express $\dot{W}_{max}(T^*)$

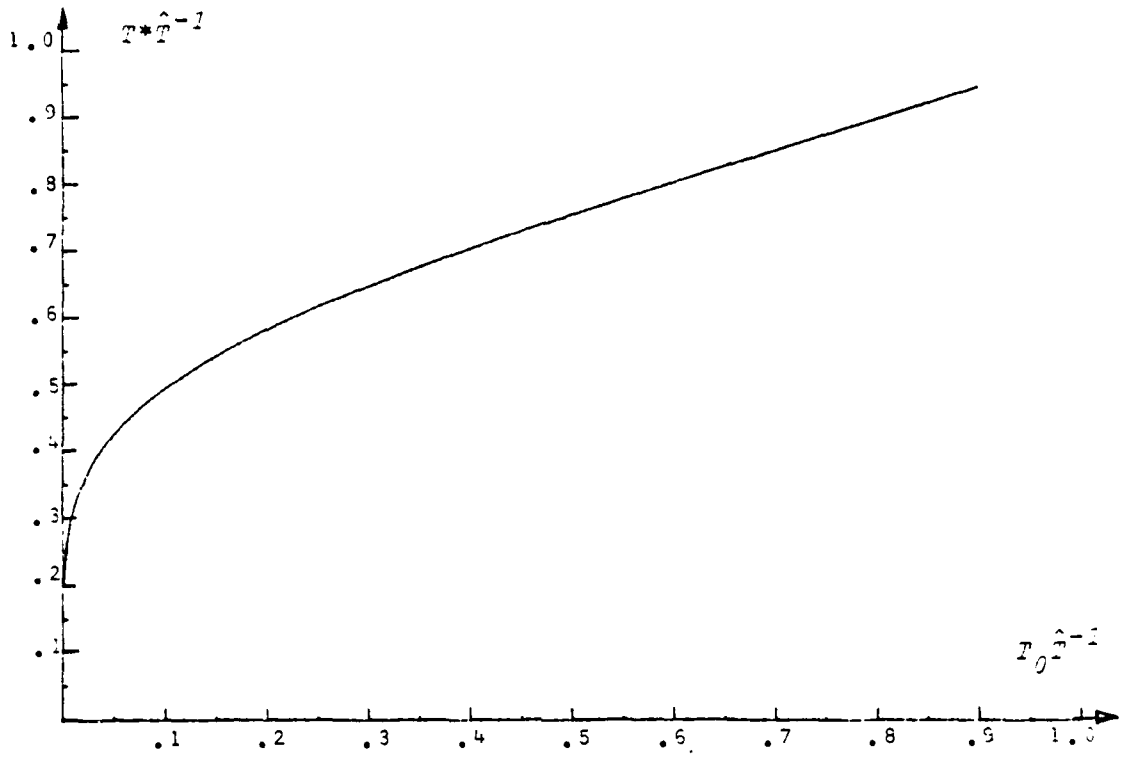

Figure 6.2 Optimal ratio $T^*\hat{T}^{-1}$ as a function of $T_0\hat{T}^{-1}$

either in (T^*, T_0) or in $(T^*, \hat{T})$:

$$\dot{W}_{max}(T^*) = \frac{4T^{*3}(T^*-T_0)^2}{T_0} - T_0\dot{\hat{S}} =$$

$$= A\varepsilon\sigma\frac{(\hat{T}^4-T^{*4})^2}{\hat{T}^4+3T^{*4}} - T_0\dot{\hat{S}} \tag{6.41}$$

The exergy power potential would thus be interpreted as:

$$\dot{E} = A\varepsilon\sigma\frac{4T^{*3}(T^*-T_0)^2}{T_0} = A\varepsilon\sigma\frac{(\hat{T}^4-T^{*4})^2}{\hat{T}^4+3T^{*4}} \tag{6.42}$$

6.4 The influence of the emissivity characteristics on power extraction

Let us now analyse the influence the emissivity property of the collector might have on the potential power extraction in the case that there is access to an infinite sink. Using the same notations as in the preceding section we wish to maximize:

$$\dot{W} = A(1-T_0T^{-1}) \int_0^\infty \varepsilon_\lambda(T)(\hat{R}_\lambda - R_{b\lambda}(T))d\lambda - T_0\dot{\hat{S}} \tag{6.43}$$

This rate depends clearly on surface properties by $\varepsilon_\lambda(T)$. For a given temperature T an *ideal collector* would have an emissivity maximizing the integral in (6.43):

$$\varepsilon_\lambda(T) = \begin{cases} 1, \text{ for } \lambda \text{ such that } \hat{R}_\lambda \geq R_{b\lambda}(T) \\ 0, \text{ for } \lambda \text{ such that } \hat{R}_\lambda < R_{b\lambda}(T) \end{cases} \tag{6.44}$$

It is therefore also clear that an ideal collector would depend on the spectrum of incoming radiation. Using such an ideal collector, the power extraction rate becomes:

$$\dot{W}(T) = A(1-T_0T^{-1}) \int_0^\infty max\{0, \hat{R}_\lambda - R_{b\lambda}(T)\}d\lambda - T_0\dot{\hat{S}} \tag{6.45}$$

Since $R_{b\lambda}$ increases monotonically in T according to (6.3), the integral is a monotonically decreasing function of T, whereas the coefficient preceding it increases degressively. The power extraction rate is therefore the product of an increasing and a decreasing function of T.

The coefficient $(1-T_0T^{-1})$ is zero at $T=T_0$ and the integral is zero for a sufficiently high temperature. A sufficient condition for the existence of a positive maximum of $\dot{W}(T)$ is therefore that $\hat{R}_\lambda > R_{b\lambda}(T_0)$ for λ in some interval. Conditions for uniquenes in such a maximum depends to a great extent on the form that $\hat{R}_\lambda$ exhibits.

Let us introduce the auxhiliary variable γ defined by:

$$\gamma = (1-T_0T^{-1}) \tag{6.46}$$

Clearly γ is a one-to-one mapping of T. The power extracted may now be written:

$$\dot{W}(\gamma) = A\int_0^\infty max\{0,\gamma(\hat{R}_\lambda-R_{b\lambda}(\gamma))\}d\lambda \tag{6.47}$$

It is easily shown that $\gamma R_{b\lambda}(\gamma)$ is a convex function of γ, since:

$$\frac{\partial R_{b\lambda}(\gamma)}{\partial\gamma} = \frac{b_2}{\lambda T_0}R_{b\lambda}(\gamma) + \frac{b_1b_2}{\lambda^6T_0}R^2_{b\lambda}(\gamma) > 0 \tag{6.48}$$

and repeating the differentiation would yield:

$$\frac{\partial^2R_{b\lambda}(\gamma)}{\partial\gamma^2} > 0 \tag{6.49}$$

Therefore $\gamma(\hat{R} - R_{b\lambda}(\gamma))$ is a strictly concave function of γ. This, unfortunately, does not guarantee that the integral of $max\{0,\gamma(\hat{R}-R_{b\lambda}(\gamma))\}$ is concave in γ.

The functions $\hat{R}_\lambda$ and $R_{b\lambda}$ may intersect at several points in λ. Denoting upper points by $\bar{\lambda}_i$ and lower by $\underline{\lambda}_i$ for intervals where $\hat{R}_\lambda \geq R_{b\lambda}$ we may write:

$$\dot{W}(\gamma) = \sum_i\int_{\underline{\lambda}_i}^{\bar{\lambda}_i}\gamma(\hat{R}_\lambda-R_{b\lambda}(\gamma))d\lambda \tag{6.50}$$

Differentiation yields:

$$\frac{d\dot{W}(\gamma)}{d\gamma} = A \left(\sum_i \left(\frac{d\bar{\lambda}_i}{d\gamma} \gamma(\hat{R}_{\bar{\lambda}i} - R_{b\bar{\lambda}i}) - \frac{d\underline{\lambda}_i}{d\gamma} \gamma(\hat{R}_{\underline{\lambda}i} - R_{b\underline{\lambda}i}) + \right.\right.$$

$$\left. + \int_{\underline{\lambda}_i(\gamma)}^{\bar{\lambda}_i(\gamma)} (\hat{R}_\lambda - R_{b\lambda}(\gamma))\, d\lambda - \gamma \int_{\underline{\lambda}_i(\gamma)}^{\bar{\lambda}_i(\gamma)} \frac{\partial R_{b\lambda}}{\partial \gamma}\, d\lambda \right) \qquad (6.51)$$

The first two terms vanish since $\hat{R}_\lambda = R_{b\lambda}$ at intersections. Candidates of γ to maximize $\dot{W}(\gamma)$ would therefore be found among the solutions to:

$$\int_0^\infty max\{0, \hat{R}_\lambda - R_{b\lambda}(\gamma)\} d\lambda - \gamma \int_\Gamma \frac{\partial R_{b\lambda}}{\partial \gamma}\, d\lambda = 0 \qquad (6.52)$$

where the domain of integration $\lambda \epsilon \Gamma$ covers values of λ satisfying $\hat{R}_\lambda \geq R_{b\lambda}(\gamma)$.

A second derivation of (6.51) would yield several negative terms but also two positive terms depending on $\frac{\partial \hat{R}_\lambda}{\partial \lambda}$ at points of intersection. This prevents a definite conclusion that $\dot{W}(\gamma)$ would be concave in γ, but such an assumtion still appears reasonable for simple forms of $\hat{R}_\lambda$. For all practical purposes it therefore appears as if the solution in γ and therefore in T is unique. In the special case when the incoming radiation originates from a black body to be applied to solar radiation in section 6.7 below, there will be at most one intersection $\bar{\lambda}$ between the spectrum of the incoming radiation $\hat{R}_\lambda = \beta \hat{R}_{b\lambda}(\hat{T})$ and the emission spectrum of the black collector $R_{b\lambda}(T)$, where β is the fraction of the original radiancy reaching the collector, $\hat{T}$ the temperature of the source and T the temperature of the collector. When $T \leq \beta\hat{T}$ there will be no intersection for any $\lambda > 0$ and when $\beta\hat{T} < T < \hat{T}$ there is exactly one intersection. To the left of this $\lambda = \bar{\lambda}$ the incoming radiancy is greater than the radiancy emitted by the collector and this relation is

reversed to the right of $\bar{\lambda}$. It is also easily found that $\frac{\partial \bar{\lambda}}{\partial T} < 0$, i e that the point of intersection moves to the left when the temperature of the collector is increased. Of interest is therefore to study the function $\dot{W}(\gamma(T))$ in (6.50) where the integration is to take place over the only interval $[0, \bar{\lambda}]$.

An ideal collector combined with an optimal choice of T will yield a maximal power per unit of collector area. Thus it seems impossible to disregard material characteristics as well as choice of temperature when defining the theoretically maximal power output, i e the exergy power potential. If exergy is to be defined in this way, it would therefore presuppose the notion of an ideal collector.

6.5. Exergy power potential of parallel radiation

Up to now we have considered a given incoming radiation meeting a collector directly. Let us now study the effects of concentrating the radiation e g by means of a parabolic reflector as illustrated in figure 6.3 or by using an ideal convex lense.

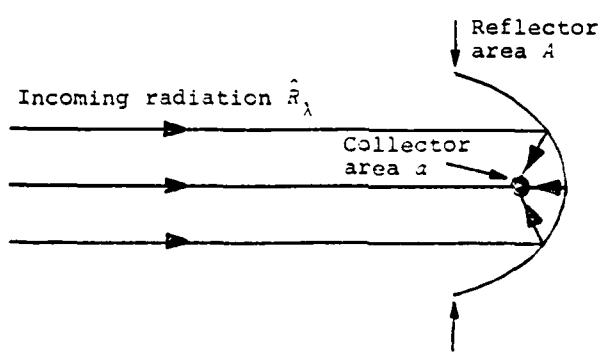

Figure 6.3. Parabolic reflector concentrating radiation

Assume that the reflector is ideal, having unit reflectivity $\rho=1$, that the area the reflector covers perpendicularly to radiation is A, that the effective collector area is a and that the incoming radiation in a first case is parallel. Let us define φ as the ratio A/a of these two areas. On the average

the radiancy distribution of radiation meeting the collector will therefore be $\varphi\hat{R}_\lambda$. According to our previous discussion the radiation absorbed per time unit at temperature T will be:

$$\alpha \int_0^\infty \varepsilon_\lambda(T)(\hat{R}_\lambda\varphi - R_{b\lambda}(T))d\lambda = A \int_0^\infty \varepsilon_\lambda(T)(\hat{R}_\lambda - \varphi^{-1}R_{b\lambda}(T))d\lambda \quad (6.53)$$

For a grey collector to which a reversible heat engine is applied, the extractable power at temperature T is therefore:

$$\dot{W}(T) = A\varepsilon(1-T_0/T)(\hat{R}-\varphi^{-1}\sigma T^4) \quad (6.54)$$

For each given φ there will be a unique $T^* > T_0$ maximizing $\dot{W}(T)$ determined from the solution to (cf (6.39)):

$$\frac{\partial\dot{W}}{\partial T} = \frac{A\varepsilon\sigma T_0 T^3}{\varphi\hat{T}}\left(\left(\frac{\hat{T}}{T}\right)^5 + 3\left(\frac{\hat{T}}{T}\right) - 4\frac{\hat{T}}{T_0}\right) = 0 \quad (6.55)$$

where $\hat{T}$ is the temperature of the concentrated radiation $\hat{T} = \sqrt[4]{\hat{R}\varphi\sigma^{-1}}$. Solving for φ as a function of T^* yields:

$$\varphi = \frac{\sigma T^{*4}(4T^* - 3T_0)}{\hat{R}T_0} \quad (6.56)$$

For $T^* \geq 3T_0/5$, this is a one-to-one mapping as is illustrated in figure 6.4.

Due to the monotonic character of $\varphi(T^*)$, we may use T^* as an independent variable describing the maximal power output as an indirect function of φ. Inserting $\varphi(T^*)$ into (6.54) yields:

$$\dot{W}(T^*) = A\varepsilon\hat{R}\,\frac{4(T^*-T_0)^2}{T^*(4T^*-3T_0)} < A\varepsilon\hat{R} \quad (6.57)$$

Differentiating this expression shows a positive derivative in the interval $T^* > T_0$ we are considering. This means that the

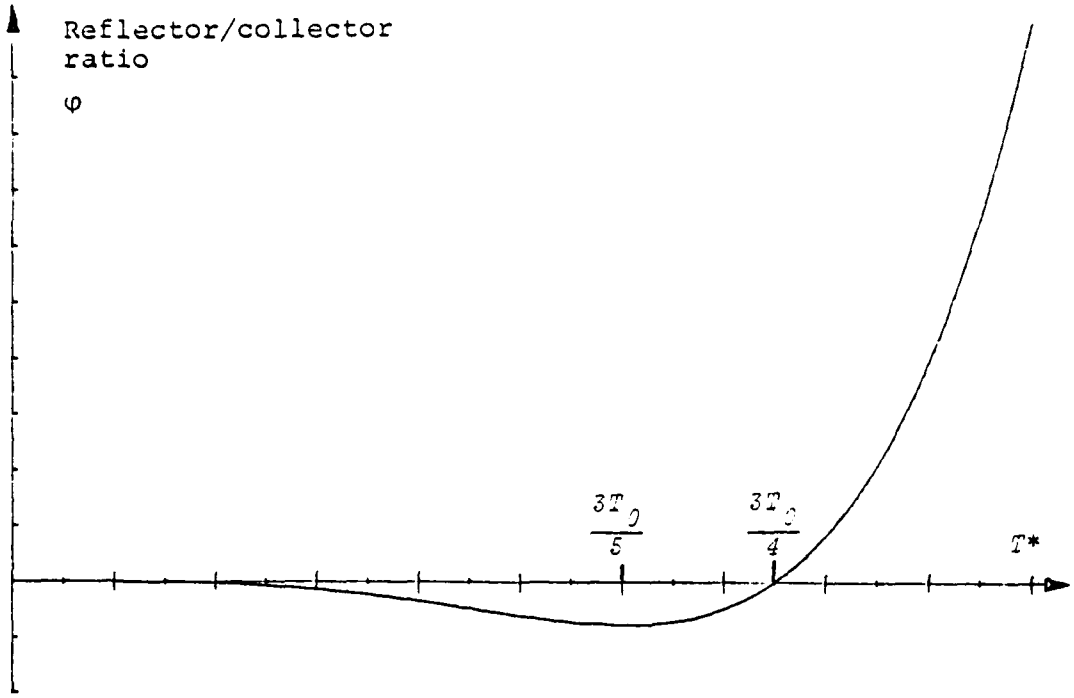

Figure 6.4. Reflector/collector ratio φ as a function of optimal temperature T^*

maximal $\dot{W}(T^*)$ is a monotonically increasing function of φ. From (6.57) we find:

$$\lim_{\varphi \to \infty} - \dot{W}(T^*) = \lim_{T^* \to \infty} \dot{W}(T^*) = A\varepsilon\hat{R} \tag{6.58}$$

Hence when the area of the collector is made to decrease towards zero, the maximal power output tends towards the incoming radiancy adjusted for the emissivity (absorptivity). Therefore, for a black surface, theoretically all incoming parallel radiancy may be transformed into mechanical work, which means that the *exergy power potential of parallel radiation* is:

$$\dot{E} = A\varepsilon\hat{R} \tag{6.59}$$

6.6. The influence of the dispersion of the direction of radiation on power extraction. The second law as a geometrical principle

In the real world there is no truly parallel radiation. Such radiation would have to be generated by a point source at an infinite distance from the collector and the source would therefore have to have an infinite power of emission. Let us therefore investigate the opportunity to increase the radiancy obtained from a finite emitter by means of reflection or refraction. Throughout we assume that the source is grey (or black as a limiting case) and that therefore Stefan-Bolzmann's law (6.9) holds.

A source of a given temperature will emit a certain radiancy. If the area of the source were given a special geometry, the radiancy from different sections of the emitting area could be made to converge towards the same small part of an absorbing surface. Similarly, the radiancy from a section of the source could be made to converge towards a small part of the absorber by means of ideally reflecting or refracting devices. If the radiancy at the absorber by such means were raised above its level at the source, this would mean that the equilibrium temperature of the absorber (no cooling) would be higher than that of the source. This would clearly be in conflict with the second law, since heat in the form of radiation would be transmitted from a body with lower temperature to a body with higher temperature. Therefore, according to the second law, it is impossible to construct a geometry of the source, or a reflecting or refracting device, that would account for such a high degree of concentration. However, this limitation is in essence a more or less geometrical question, apart from the application of the Stefan-Bolzmann law. To show that radiation can be concentrated up to a maximal level by means of geometrical considerations, can therefore be looked upon as justifying the second law from a geometrical principle. The relationship

between radiation and the second law aroused interest in the early days of thermodynamics (cf [Gibbs(1883), 1906, pp. 404-405]).

We assume that the emitting source is a grey surface and that the emission is uniform in all directions from every point on this surface. Consider a given point on the emitting surface, a small flat surface element dA_0 surrounding this point, and a similar point on a receiving surface and a small flat surface element dA_1 surrounding that point. Let the distance between the two surface elements be r and the angles between their normal vectors and the line joining them be Φ_0 and Φ_1 respectively, as is shown in figure 6.5.

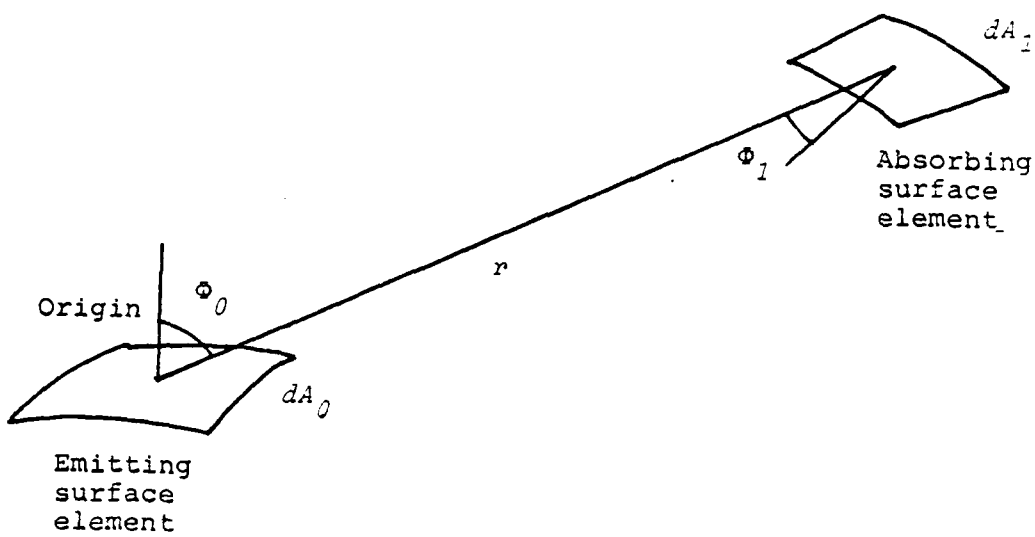

Figure 6.5. Emitting and absorbing surface elements

The amount of radiation $d\dot{W}(dA_0)$ leaving dA_0 and received by dA_1 must be proportional both to dA_0 projected perpendicularly to the direction of dA_1 and to the solid angel subtended by dA_1, which means that this amount of radiation is proportional to $dA_0 cos\Phi_0$ and to $dA_1 cos\Phi_1 r^{-2}$:

$$\dot{W}(dA_0) = const \frac{dA_0 \cos\Phi_0 \, dA_1 \cos\Phi_1}{r^2} \tag{6.60}$$

which is an expression for *Lambert's law* [Jenkins, White, 1957, pp 108 ff]. Introducing spherical coordinates (r, θ, φ) with an origin at dA_0, we let $\Phi_0 = \theta$. A solid angle element defined by the differential angles $d\theta$, $d\varphi$, will then be $d\Omega = \sin\theta d\theta d\varphi$.

Since the emitting surface is grey with a temperature of T, its total emission from dA_0 in all directions is $dA_0 \varepsilon\sigma T^4$. Integrating (6.60) over the half space above dA_0, we therefore obtain:

$$dA_0 \varepsilon\sigma T^4 = const \, dA_0 \int_{\varphi=0}^{2\pi} \int_{\theta=0}^{\pi/2} \cos\theta \sin\theta \, d\theta d\varphi =$$

$$= 2\pi \, const \, dA_0 \int_0^{\pi/2} \frac{\sin 2\theta}{2} d\theta = \pi \, const \, dA_0 \tag{6.61}$$

Hence the constant in (6.60) will be $\varepsilon\sigma T^4 \pi^{-1}$, which is the *photometric brightness* of the source.

Let us now place the receiving element dA_1 at the origin with its normal vector in the direction of $\theta=0$ and let the emitting surface be defined by an equation:

$$f(r,\theta,\varphi) = r - r_1(\theta,\varphi) = 0 \tag{6.62}$$

which means that we have set $\theta=\Phi_1$. The total amount of radiation, the total *luminous flux*, received by dA_1 will now be:

$$\dot{W} = \frac{\varepsilon\sigma T^4 dA_1}{\pi} \iint_{A_0} \frac{\cos\Phi_0 \cos\theta dA_0}{r^2} =$$

$$= \frac{\varepsilon\sigma T^4 dA_1}{\pi} \iint_{\Omega_0} \frac{\sin 2\theta}{2} d\theta d\varphi \tag{6.63}$$

where the integration takes place over the total solid angle Ω_2 subtended by the emitting area A_2. Since the integrand is everywhere positive ($\theta \leq \pi/2$), it is at most π, which would be obtained in the case when A_2 covers the entire hemisphere as seen from dA_1. Therefore we must have:

$$d\dot{W} \leq \varepsilon\sigma T^4 dA_1 \tag{6.64}$$

which means that the incoming radiancy (the *illuminance*) is limited by:

$$R = \frac{d\dot{W}}{dA_1} \leq \varepsilon\sigma T^4 \tag{6.65}$$

From (6.14) we know that the maximum temperature of an absorber (grey) is at most $T^* = \sqrt[4]{\hat{R}\sigma^{-1}}$, where $\hat{R}$ is the given radiancy hitting its surface. The inequality of (6.65) means that the temperature of the absorber is limited by:

$$T^* \leq T \tag{6.66}$$

which is nothing but the second law. Hence, as expected, the temperature of a collector absorbing radiancy is limited by the temperature of the emitting source. This case shows that it is impossible by manipulating the geometry of the emitting surface A_2 to increase the incoming radiancy beyond the level of the emitting radiancy (in any case for grey emitters).

We now turn to a second case in which a reflecting surface is introduced in order to concentrate the emitted radiation towards a collector. Thus there are three surfaces to be considered, the emitting, the reflecting and the absorbing surfaces. As previously, let us place an element of the absorbing surface dA_1 at the origin of a spherical system of coordinates and let the direction $\theta=0$ follow the normal vector of this element. Furthermore, let us denote the equation of the reflecting surface:

$$g(r,\vartheta,\varphi) = r - r_2(\vartheta,\varphi) = 0 \tag{6.67}$$

and an element of this surface dA_2. The configuration is described in figure 6.6.

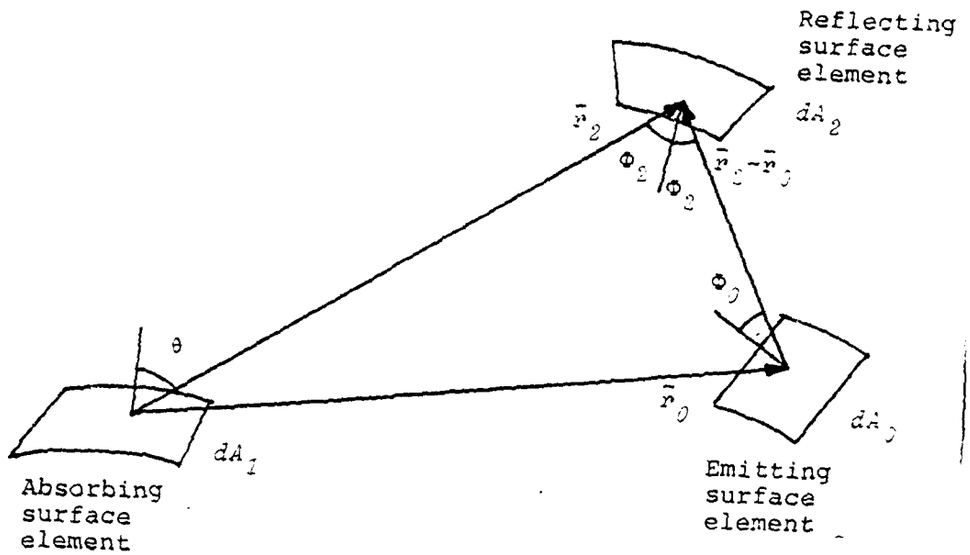

Figure 6.6. Emitting, reflecting and absorbing surface elements

Let the vector $\bar{r}_0$ point out the surface element dA_0 and $\bar{r}_2$ the element dA_2. The vector $\bar{r}_2-\bar{r}_0$ will then point from dA_0 to dA_2. According to the law of reflection, if a ray from dA_0 is reflected at $\bar{r}_2$ and reaches the origin, the incident and reflecting angles at dA_2 must be the same, which, in vector terminology, requires that the following scalar product is zero:

$$\left(\frac{\bar{r}_2-\bar{r}_0}{|\bar{r}_2-\bar{r}_0|} - \frac{\bar{r}_2}{|\bar{r}_2|} \right) \operatorname{grad} g(r,\vartheta,\varphi) = 0 \tag{6.68}$$

where $grad\ g(r,\theta,\varphi)$ is the gradient of $g(r,\theta,\varphi)$ and therefore a normal vector of dA_2 evaluated at $\bar{r}_2$. For a given $\bar{r}_0$, this equation will be a relationship between the derivaties $\frac{\partial r_2}{\partial \theta}$, $\frac{\partial r_2}{\partial \varphi}$ and the coordinates r,θ,φ at $\bar{r}_2$. A question is the multitude of points $\bar{r}_2$ that might satisfy (6.68) for a given $\bar{r}_0$. If the coordinate system is directed so that $\bar{r}_0$ falls on the axis $\theta=0$, (6.68) turns out to have the well-known solution:

$$|\bar{r}_2| + |\bar{r}_2-\bar{r}_0| = h(\varphi) \tag{6.69}$$

where $h(\varphi)$ is an arbitrary positive function having a magnitude of more than $|\bar{r}_0|$. For a fixed longitudinal angle φ, (6.69) describes elliptic arcs having the distance $|\bar{r}_0|$ between the two focal points and with the longer half axis $h(\varphi)/2$.

For a given dA_0 at $\bar{r}_0$ placed on the axis $\theta=0$, this surface element can at most be reflected towards dA_2 along a path lying on a surface (6.69) as θ varies or a portion of or the whole of such a surface. It should also be noted that if $\bar{r}_2$ is a point of reflection satisfying (6.68) for a given $\bar{r}_0$, then no other $\bar{r}_0=\bar{r}_0'$, i e no other dA_0' can emit a ray to be reflected at $\bar{r}_2$ since the new dA_0' would either block or be shaded by the previous emitting element dA_0.

From our previous equations, the amount of radiation reaching dA_2 from dA_0 will be:

$$d\dot{N}(dA_0) = \frac{\varepsilon\sigma T^4 dA_0 \cos\Phi_0 dA_2 \cos\Phi_2}{\pi|\bar{r}_2-\bar{r}_0|^2} \tag{6.70}$$

If dA_2 is suitably oriented, this amount will be reflected at $\bar{r}_2$ and hit dA_0 at the origin. If dA_0 instead were chosen as an emitting surface element with the same characteristics as dA_2 (same ε and T), then dA_0 would receive the amount:

$$d\dot{W}(dA_1) = \frac{\varepsilon\sigma T^4 dA_1 \cos\Phi_1 dA_2 \cos\Phi_2}{\pi|\bar{r}_2|^2} \tag{6.71}$$

For a given dA_2, the two differentials $d\dot{W}(dA_2)$ and $d\dot{W}(dA_1)$ must be equal, since the two cases simply involve a reversal of the direction of flow. This provides the following relation between dA_2 and dA_1:

$$\frac{dA_2 \cos\Phi_2}{|\bar{r}_2-\bar{r}_2|^2} = \frac{dA_1 \cos\Phi_1}{|\bar{r}_2|^2} \tag{6.72}$$

The total radiancy from dA_2 at dA_1 would therefore be:

$$R(dA_2) = \iint_{A_2} \frac{d\dot{W}(dA_2)}{dA_1} = \frac{\varepsilon\sigma T^4}{\pi} \iint_{A_2} \frac{\cos\Phi_1 \cos\Phi_2 \, dA_2}{|\bar{r}_2|^2} =$$

$$= \frac{\varepsilon\sigma T^4}{\pi} \iint_{\Omega_2} \cos\theta \sin\theta \, d\theta d\varphi \tag{6.73}$$

since $\Phi_1=\theta$ and $dA_2 \cos\Phi_2 |\bar{r}_2|^{-2}$ is the solid angle subtended by dA_2 as seen from the origin. The integration in (6.73) takes place over that part of the reflecting area A_2 that satisfies (6.68). No other dA_2 may be reflected by the same solid angle already integrated over in (6.73), but well over some other portion of the hemisphere above dA_1, or emission from some other dA_2 might reach dA_1 directly, provided there is a portion of the hemisphere available. Taking all opportunities of reflection and direct transmission into account, the total incoming radiancy will be:

$$R = \frac{\varepsilon\sigma T^4}{\pi} \iint_{\Omega} \cos\theta \sin\theta \, d\theta d\varphi \leq \varepsilon\sigma T^4 \tag{6.74}$$

where Ω accounts for the total solid angle the emitting surface covers either by reflection or directly.

Therefore, once again we find that the incoming radiancy is at most that of the source and that the temperature of the collector can reach no higher level than that of the emitting surface, i e the second law explained by a geometrical principle.

Similar findings would be expected for cases of concentrating radiation by means of refraction in ideal convex lenses, but such considerations are omitted here.

Let us now turn to the question of power extraction from radiation emitted by a finite source assuming this extraction takes place by using an ideal heat engine inserted between a collector and an infinite environment with the constant temperature T_0. The main results from section 6.5 may now be applied directly. There it was shown that the extracted power per unit area of incoming radiation would increase as a function of the reflector/collector ratio φ. In the present section it has been shown that the radiancy could be concentrated no more than to that of the emitting source. This means in the case of a black body emission at the temperature $\hat{T}$, an ideal reflector and a grey collector, that the reflector/collector ratio φ can be at most:

$$\varphi_{max} = \frac{\sigma \hat{T}^4}{\hat{R}} \tag{6.75}$$

where $\hat{R}$ is the radiancy reaching the reflector. The optimal operating temperature will then, as before, be given as the unique solution to the fifth-order equation (6.55) or (6.56) with $\varphi = \varphi_{max}$ according to (6.75). Therefore the *exergy power potential* from the non-parallel radiation will be given by (6.57) with $\dot{W}(T^*)$ exchanged for $\dot{E}$:

$$\dot{E} = A\varepsilon\hat{R}\,\frac{4(T^*-T_0)^2}{T^*(4T^*-3T_0)} \tag{6.76}$$

where A is the area and ε the emissivity of the collector, $\hat{R}$

the radiancy reaching the collector and T^* the soluton to (6.55). Clearly, the exergy power potential of non-parallel radiation must be lower than that of parallel radiation according to the inequality in (6.57). The dispersion in direction of the incoming rays is therefore also a property to be taken into account when evaluating the exergy power potential of radiation.

6.7. Solar energy

As an illustration to the ideas set forth in the previous sections we consider radiation emitted by the Sun. The Sun is a spherical ball of gas made up of a number of different layers. The surface accounting for the continuous light spectrum of the Sun, the *photosphere*, has an approximate temperature of $\hat{T}=6000\ K$ and a radius of $r_{sun} = 7 \cdot 10^8 m$. The distance to the Earth is $r = 1.5 \cdot 10^{11} \pm 2.5 \cdot 10^9 m$, the shortest distance reached in January and the greatest in July. The Earth has an approximate radius of $r_{earth} = 6.37 \cdot 10^6 m$.

The solid angle subtended by the Sun as seen from the Earth will therefore be:

$$\Omega_{sun} = \frac{\pi r_{sun}^2}{r^2} = \pi \left(\frac{7}{1.5}\right)^2 \cdot 10^{-6} = 6.34 \cdot 10^{-5} [steradians] \quad (6.77)$$

which accounts for only a fraction $1.09 \cdot 10^{-5}$ of the total hemisphere visible from the Earth. Therefore the Sun may well be approximated as a point source.

The spectrum of the Sun as measured above the atmosphere of the Earth (figure 6.7) shows that the Sun can be approximated as a black-body radiator. Certain wave lenghts are missing due to absorption in the Sun's atmosphere (the *Fraunhofer lines*).

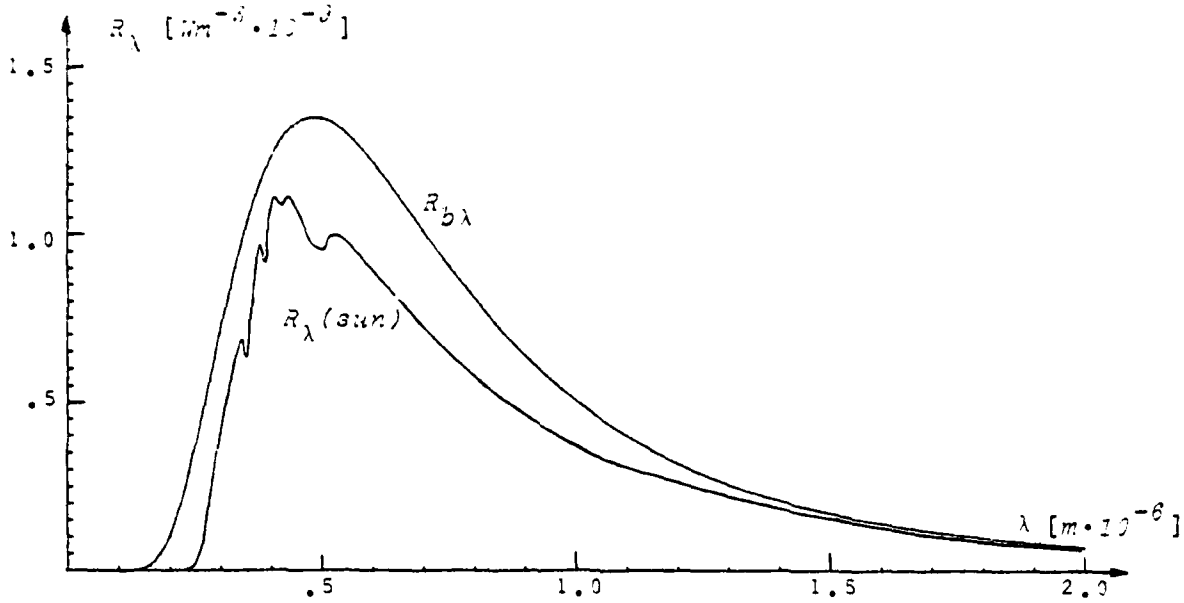

Figure 6.7. Radiancy distribution of the Sun above the atmosphere of the Earth compared with the black body radiation spectrum (figure adapted from [Nämnden för energiproduktionsforskning, 1977, p 29].

Assuming the Sun to be a spherical black body radiator, its total emission will be given by the Stefan-Bolzmann law (6.6):

$$4\pi r_{sun}^2 \, \sigma \hat{T}^4 = 4\pi(7 \cdot 10^8)^2 \cdot 5.7 \cdot 10^{-8} \cdot 6000^4 = 4.5 \cdot 10^{24} [W] \quad (6.78)$$

the experimentally obtained value being more like $4 \cdot 10^{24} W$. Of this radiation the Earth will receive the fraction:

$$4\pi r_{sun}^2 \sigma \hat{T}^4 \cdot \frac{\pi r_{earth}^2}{4\pi r^2} = \frac{4.5 \cdot 10^{24} (6.37 \cdot 10^6)^2}{4 \cdot (1.5 \cdot 10^{11})^2} = 2.0 \cdot 10^{15} [W] \quad (6.79)$$

or per square metre perpendicular to the radiation:

$$\hat{R} = \sigma \hat{T}^4 \frac{r_{sun}^2}{r^2} = 1.6 \cdot 10^3 \quad [Wm^{-2}] \quad (6.80)$$

which is slightly above the experimental value $1.4 \cdot 10^3 Wm^{-2}$.

This function, illustrated in figure 6.8, has a maximum of $\dot{W}(T^*)A^{-1} = 107\,Wm^{-2}$ at the collector temperature $T^* = 356K$, this solution corresponding to a value of $\hat{T} = 410K$ and $T_0 = 300K$ in (6.39). With a black collector (the best of all grey collectors) and no concentration of the radiation, there is only a fraction of 6.7 per cent of the incoming radiation available for power under ideal conditions in all other respects as well.

On a bright sunny day some of this radiation would be absorbed by the atmosphere of the Earth, on a cloudy day it would be reduced severely, and at night the radiation meets other parts of the Earth. The actual radiation will therefore vary a great deal with time of day, meteorological conditions, geographical location etc. For the sake of illustrating our previous ideas however, let us assume the theoretical conditions given above and that the Earth can act as an infinite environment having a temperature of $T_0=300K$.

As a first case we consider the (unconcentrated) radiation to be absorbed by a black collector. The *incoming* radiation has a radiancy given by (6.79) and the net power extracted from an ideal heat engine will then be:

$$\dot{W}(T) = A(1-T_0T^{-1})\sigma(\hat{T}^4 \frac{r_{sun}^2}{r^2} - T^4) =$$

$$= 5.7\cdot 10^{-8}A(1-300T^{-1})(2.9\cdot 10^{10} - T^4) \quad [W] \qquad (6.81)$$

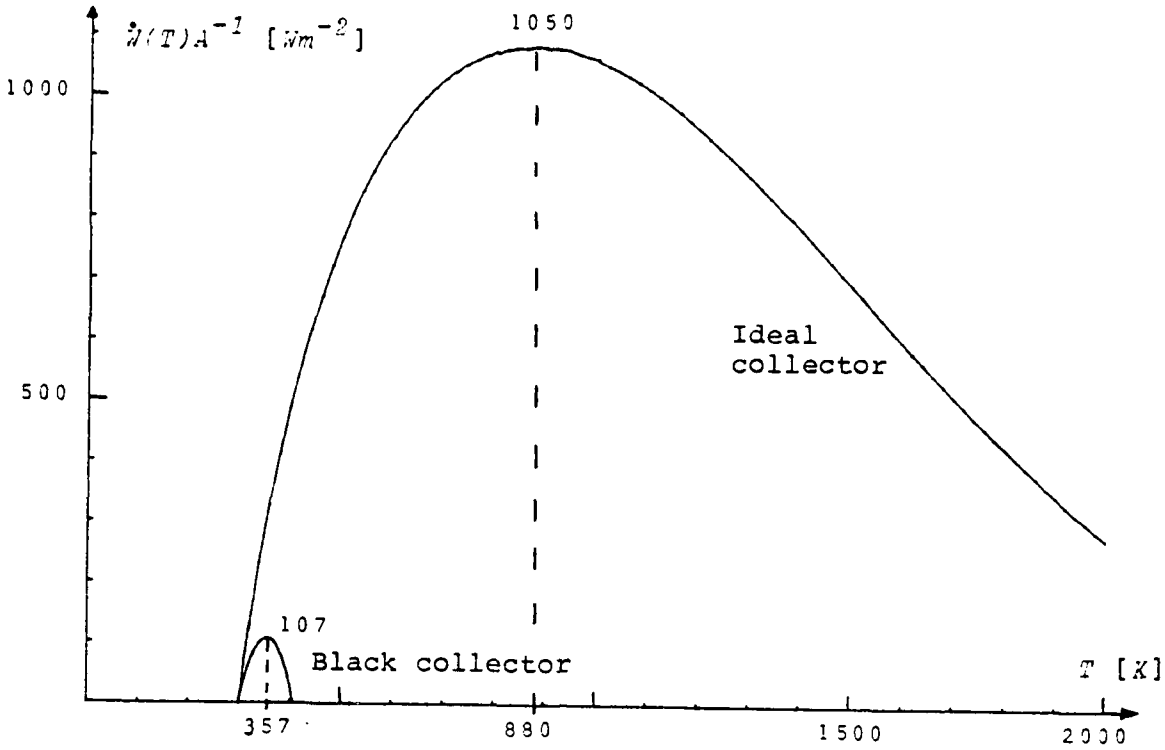

Figure 6.8. Power extraction per square metre as a function of collector temperature for a black collector and for an ideal collector

Let us now study consequences from introducing an ideal collector as defined in section 6.4. The radiancy distribution of the radiation reaching the Earth, assuming no distortion to be caused in the spectrum, will be:

$$\hat{R}_\lambda = R_{b\lambda}(\hat{T}) \frac{r_{sun}^2}{r^2} = \frac{b_1 r_{sun}^2}{\lambda^5 r^2} \cdot \frac{1}{e^{\frac{b_2}{\lambda \hat{T}}} - 1} \tag{6.82}$$

where the constants b_1 and b_2 are given by (6.4) and (6.5). The radiancy of a black collector at T will be:

$$R_{b\lambda} = \frac{b_1}{\lambda^5} \frac{1}{e^{\frac{b_2}{\lambda T}}-1} \tag{6.83}$$

In order to obtain conditions for the ideal collector we need to find the possible intersections between the curves $\hat{R}_\lambda$ and $R_{b\lambda}$. According to section 6.4 there is only one such intersection. Using our assumed values of $r_{sun}, r, \hat{T}$, we solve for $\lambda=\bar{\lambda}(T)$ as a function of T. The resulting curve is shown in figure 6.9.

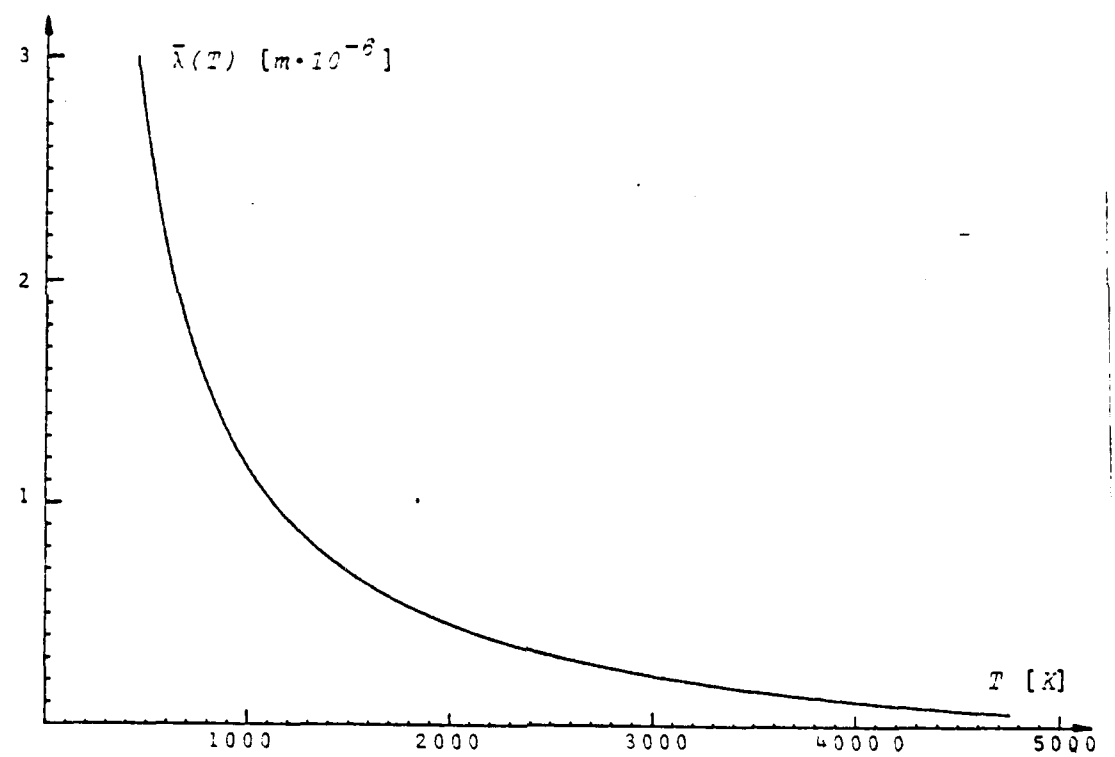

Figure 6.9. Intersection $\bar{\lambda}$ as a function of collector temperature T

Using an ideal collector, the power output of an ideal heat engine as a function of collector temperature will be:

$$\dot{W}(T) = Ab_1 \int_{\lambda=0}^{\bar{\lambda}} \left(\frac{r_{sun}^2}{r^2} \cdot \frac{1}{e^{\frac{b_2}{\lambda \hat{T}}}-1} - \frac{1}{e^{\frac{b_2}{\lambda T}}-1} \right) \lambda^{-5} \, d\lambda \qquad (6.84)$$

The integration involved has been carried out numerically and it shows a maximum of $\dot{W}(T^*)A^{-1} = 1050\ Wm^{-2}$ at a temperature of ca $T^* = 880K$. The corresponding curve is also shown in figure 6.8. Apparently the choice of optimal collector properties can increase the amount of power available considerably, in this case approximately tenfold, taking care of about 65 per cent of the incoming energy flow. It is an open question, of course, what materials that are available, now or in the future, that have emissivity properties approximating those of an ideal collector.

Finally, let us assume that we have an ideal reflector (or refractor) of an area A by which the incoming radiation may be concentrated maximally. Using the same data as previously, if the radiancy reaching the reflector is $\hat{R}_\lambda$ and the reflector/collector ratio $Aa^{-1} = \varphi_{max}$, the maximal radiancy reaching the collector will be:

$$\hat{R}_\lambda \varphi_{max} = R_{b\lambda}(\hat{T}) \cdot \frac{r_{sun}^2}{r^2} \varphi_{max} = R_{b\lambda}(\hat{T}) \qquad (6.85)$$

which means that the theoretical maximum of the reflector/collector ratio is:

$$\varphi_{max} = \frac{r^2}{r_{sun}^2} = 4.6 \cdot 10^4 \qquad (6.86)$$

which is extremely high from all practical aspects. The maximal power output from an ideal heat engine, using an ideal collector having the temperature T, is thus:

$$\dot{W}(T) = A(1-T_0T^{-1}) \int_0^{\bar{\lambda}(T)} (\hat{R}_\lambda - \varphi_{max}^{-1} R_{b\lambda}(T))d\lambda =$$

$$= A\varphi_{max}^{-1}(1-T_0T^{-1}) \int_0^{\bar{\lambda}(T)} (R_{b\lambda}(\hat{T}) - R_{b\lambda}(T))d\lambda \qquad (6.87)$$

However, according to section 6.5, there is no intersection $\bar{\lambda}(T)$ between $R_{b\lambda}(\hat{T})$ and $R_{b\lambda}(T)$ for any $T \leq \hat{T}$. Hence, the question of an ideal or a black collector would be irrelevant for solar radiation if it were concentrated maximally. Therefore (6.87) may be integrated explicitly, in which case we arrive at (6.40), yielding an optimal collector temperature of $T^*=2540K$ and a maximal power output, and therefore an exergy power potential, of $\dot{W}A^{-1} = \dot{E} = 1360\ Wm^{-2}$ This amounts to some 85 per cent of the total radiation. Of course, $2540K$ is an impossible operating temperature for practical reasons. However, the result obtained points at as high a concentration of the radiation as possible should be desired.

6.8. Exergy and radiation.

In the foregoing we have attempted to indicate that it would be a nontrivial matter to evaluate radiation from an exergetic point of view. Apart from environmental properties such as the heat capacity or temperature of the environment, also emissivity properties of the collector have an influence. Also, other characteristics than the intensity of the radiation affects the opportunity to extract work. In our treatment, we have restricted ourselves to the dispersion in the direction of incoming rays when they originate from a black-body radiator. Other properties that might be of significance could be polarisation and coherence of the radiation [cf Thoma, 1978, p 6, Grümm, 1978, pp 7-10].

Our treatment has been brief and speculative with no presumption to provide any complete or final results, but rather to indicate

some possible lines of thought. There appears to be ample space for future research along a number of different paths. A more general treatment of the influence of the dispersion of the direction of incoming radiation might depart from a given density $dF(\theta,\varphi)$ at different points on a surface, where θ and φ are measured from such points. Also the limits of concentrating radiation from a non-grey emitter might be examined.

In section 6.3 we restricted our analysis to the case that the collector operates at a temperature above that of the environment. The converse case, utilizing the environment as a warm source and the collector as an emitting sink, would also be an interesting opportunity to examine further.

CHAPTER 7. ECONOMIC MODELS OF ENERGY EXTRACTION

7.1. Introduction

In this chapter we introduce economic entities, namely *prices*, into our models treated in chapters 4-5, in order to derive properties of the optimal plan for how energy should be extracted under different ideal circumstances.

As a first model in section 7.2 we consider a system of N infinite heat sources, from which energy may be extracted according to the model given in section 4.5. A variation of this model is then given in the form of a schematic thermo-electric plant. We then introduce prices into the thermal systems of section 4.2, in which there are N finite and one possibly infinite source, which is the topic of section 7.4. The section following treats an economic model slightly different from those previously given, in which there are production factors which are not necessarily energy flows as such but rather fuels and similar resource interpretations. In a final section we introduce prices into the models of chapter 5, treating systems of ideal gases.

Throughout we attempt to show that is not energy as such that should be considered a scarce resource, but rather the exergy potential that a system of a given configuration is characterized by. Although we do not depart from the concept of exergy itself in the basic models to follow, instead choosing the second law as a fundamental constraint, it will be found that our results most conveniently can be interpreted in exergetic terms.

7.2. Economic model of power extraction from a system of N infinite heat sources.

Let us consider a system of N infinite heat sources similar to the thermal system in section 4.5, each source characterized by its constant temperature T_i, $i=1,2,\ldots,N$. Between these sources a set of heat engines are connected in order to extract power.

Without any loss in generality the sources are assumed to have different temperatures. The set of engines may be replaced by a single engine according to the discussion in section 4.5, this engine characterized by a given minimal entropy production rate $\hat{S}$. Let us also introduce a set of prices $p_1, p_2, \ldots, p_N$, where p_i is the price in *value units per energy unit* of the energy of the source having temperature T_i. The symbol p having no index will denote the value of pure work (or power). In order to keep the notations as simple as possible, we refrain from using dot-notations for rates and flows. As in section 4.5 a flow will be positive when it approaches a source and negative when it leaves the source.

The sign of the price of source i needs som attention. When a heat flow Q_i of the source is positive, this means there is an energy flow to this source. If energy is "sold" we receive a revenue in such a case. We apply the convention that price is negative for a positive flow yielding a revenue. If there instead is a net cost associated with the disposal of energy to source i, price is positive. On the other hand, when Q_i is negative, energy is received from source i. If this is obtained at a cost, price is defined as positive, and if instead a revenue is associated with such a flow (e g if the source is deliberately kept cold) then price is negative. Hence we apply the convention according to table 7.1.

	$p_i > 0$	$p_i < 0$
$Q_i > 0$	*REVENUE*, $p_i Q_i > 0$	*EXPENSE*, $p_i Q_i < 0$
$Q_i < 0$	*EXPENSE*, $p_i Q_i < 0$	*REVENUE*, $p_i Q_i > 0$

Table 7.1. Sign convention on prices

Since the model most naturally is associated with a net cost for extracting power, this net cost C is chosen as the objective funtion:

$$C = -\sum_{i=1}^{N} p_i Q_i \tag{7.1}$$

The principle problem we are to analyze in this section is as follows. A given minimal level of power $\hat{W}$ is to be extracted at as low a cost as possible, subject to a second law entropy constraint. Hence, C in (7.1) is to be minimized subject to the following contraints:

$$\sum_{i=1}^{N} Q_i + \hat{W} \leq 0 \tag{7.2}$$

$$\hat{S} - \sum_{i=1}^{N} Q_i T_i^{-1} \leq 0 \tag{7.3}$$

We introduce the non-negative multipliers β, α, associated with these two contraints and form the Lagrangean:

$$L = -\sum_{i=1}^{N} p_i Q_i + \beta\left(\sum_{i=1}^{N} Q_i + \hat{W}\right) + \alpha\left(\hat{S} - \sum_{i=1}^{N} Q_i T_i^{-1}\right) \tag{7.4}$$

The Kuhn-Tucker requirements for a minimum are obtained as:

$$\frac{\partial L}{\partial Q_i} = -p_i + \alpha T_i^{-1} = 0, \qquad i=1,2,\ldots,N \tag{7.5}$$

$$\frac{\partial L}{\partial \beta} = \sum_{i=1}^{N} Q_i + \hat{W} \leq 0 \tag{7.6}$$

$$\frac{\partial L}{\partial \alpha} = \hat{S} - \sum_{i=1}^{N} Q_i T_i^{-1} \leq 0 \tag{7.7}$$

$$\beta, \alpha \geq 0 \tag{7.8}$$

where equality in (7.6) or (7.7) holds when β or α are positive respectively and where a strict inequality in (7.6) or (7.7) implies $\beta=0$ or $\alpha=0$ respectively. Due to the linearity of the problem, the conditions are both necessary and sufficient for a cost minimum. If these conditions cannot hold simultaneously due to some specific choice of parameters p_i, $\hat{W}$ and $\hat{S}$, then a minimum will not exist, i e it will be possible to earn infinite profits.

We have already assumed that all temperatures T_i are different Let us combine the above conditions for two different index values in (7.5), say i and j. This gives us:

$$\beta = \frac{p_i T_i - p_j T_j}{T_i - T_j} \geq 0 \tag{7.9}$$

$$\alpha = \frac{T_i T_j}{T_i - T_j} (p_i - p_j) \geq 0 \tag{7.10}$$

These two sets of inequalities have extremely far-reaching consequences. Let us first divide the set of possibilities into the two cases that either all prices p_i, $i=1,2,\ldots,N$, are equal to say $\hat{p}$, or they are not all equal. When they are all equal we have $C = -\hat{p} \sum_{i=1}^{N} Q_i = \hat{p}\hat{W}$, which means that the cost would be independent of any choice we might wish to make, and we would also have $\alpha=0$ making the second law constraint ineffective and $\beta=\hat{p}$, which means that any solution satisfying (7.6) with equality and (7.7) will be optimal.

In practice, there would always be some energy source, an environment, providing heat or absorbing heat at the price zero. If prices are equal, they would all be zero in such a case, which obviously is unrealistic since we know of energy we are willing to pay for.

Let us therefore rule out the case that all prices are equal and assume in the following that at least two prices p_i and p_j are different. This implies by (7.10) that $\alpha>0$ and that when comparing any two sources a *higher-temperatured source must have a higher price* (or lower negative price):

$$T_i > T_j \quad \textit{implies } p_i > p_j, \textit{ for all } i,j \tag{7.11}$$

Hence, *a source with a higher temperature has a quality that justifies a higher economic value*. Price must necessarily increase with temperature.

When we are dealing with negative prices (according to the interpretation conventions previously given), a higher temperature will yield a less negative price. This may be interpreted for instance as a lower cost for cooling an engine.

If the temperature T_j of one of the sources tends towards infinity, we find from (7.9) that:

$$\beta = \lim_{T_j \to \infty} \frac{p_i T_i - p_j T_j}{T_i - T_j} = p_i = p \tag{7.12}$$

Hence, β is interpreted directly as the value of work. This is in complete agreement with the effects of a marginal change in $\hat{W}$:

$$\frac{\partial C}{\partial \hat{W}} = \beta \tag{7.13}$$

meaning that a unit change in the amount of power extracted will increase the total cost by $\beta = p$. For a marginal change in the minimal entropy production rate $\hat{S}$ we obtain:

$$\frac{\partial C}{\partial \hat{S}} = \alpha > 0 \tag{7.14}$$

which gives us an interpretation of this multiplier. The strict inequality in (7.14) implies an equality in (7.7) meaning that the actual entropy produced is at its very minimum, when costs are minimized.

Returning once again to (7.9)-(7.10) we find that if any two prices and the corresponding temperatures are given, then all other prices are uniquely determined. Let us denote two such reference sources by (p', T') and (p'', T''). The solution to (7.5) can then be written:

$$p_i = \frac{p'T' - p''T''}{T' - T''} - \frac{T'T''}{T' - T''}(p' - p'')T_i^{-1} =$$

$$= \frac{p''(1 - T'T_i^{-1})}{1 - T'T''^{-1}} + \frac{p'(1 - T''T_i^{-1})}{1 - T''T'^{-1}} \tag{7.15}$$

which shows each price p_i to be determined as a special kind of linear combination of the two reference prices p' and p''. If we now interpret p' as the price of work, ie $p'=p$ and $T'=\infty$, we obtain:

$$p_i = p(1-T''T_i^{-1}) + p''T''T_i^{-1} \tag{7.16}$$

or:

$$p = \frac{p_i}{1-T''T^{-1}} - \frac{p''T''T_i^{-1}}{1-T''T_i^{-1}} \tag{7.17}$$

It is clear from (7.16) that if $p>0$, then for a sufficiently low T_i, p_i must be negative since always $p>p_i$. Therefore, if we let T_i change continuously, at some point the corresponding p_i will be zero. Let this temperature be used as a new (third) point of reference denoted T^*. Solving with $p_i=0$ in (7.16) yields:

$$T^* = \frac{(p'-p'')T'T''}{p'T'-p''T''} = T''(1-p''p^{-1}) \tag{7.18}$$

where the right-hand member refers to the case $p'=p$, $T'=\infty$. Eliminating T'' from the right-hand member and (7.16) yields the two important equations:

$$p_i = p(1-T^*T_i^{-1}) \tag{7.19}$$

$$p = \frac{p_i}{1-T^*T_i^{-1}} \tag{7.20}$$

which must hold good for all T_i. This form is nothing but the original optimization condition (7.5) rearranged.

If a certain source would have had a zero price, then it would have the temperature T^*. However, T^* is defined by (7.18) whether or not there actually exists a source with this particular temperature.

The right-hand member of (7.20) will be referred to as a *temperature-discounted price* (discounted with respect to temperature T_i). The reference temperature T^* may conveniently be interpreted as the temperature of an environment from or to which energy may be collected or disposed of free of charge.

Therefore, as a main result of this section we must conclude that if an optimum exists, at this optimum *all temperature-discounted prices must be equal, and in addition, be equal to the price of work*. The equality (7.20) can therefore be considered as an important condition for how the values of differently temperatured energy sources are related to one another and to the value of work.

Temperature-discounted prices will be shown to be of great significance in all remaining sections of this report. Therefore we introduce the special designation $\bar{p}_i$ for the right-hand member of (7.20).

Reverting to (7.10) again, we find:

$$\frac{\partial C}{\partial \hat{S}} = \alpha = pT^* \tag{7.21}$$

which means that the value of the multiplier α equals the price of work multiplied by the "environment" temperature.

Inserting (7.19) into (7.1) and using the equalities of (7.2)-(7.3) we also obtain:

$$C = p(\hat{W}+T^*\hat{S}) \tag{7.22}$$

which shows the minimal cost as the value of power produced $p\hat{W}$ added to the value of the lost power $pT^*\hat{S}$.

In this section we have found that when temperature alone characterizes the quality of energy, this quality will reflect

the value of this energy according to (7.19). A temperature may be interpreted physically as energy density (concerning the molecular kinetic energy, cf section 2.8). The economic value p_T of heat energy of temperature T is thus given by:

$$p_T = p(1-T^*T^{-1}) \tag{7.23}$$

This function is illustrated in figure 7.1.

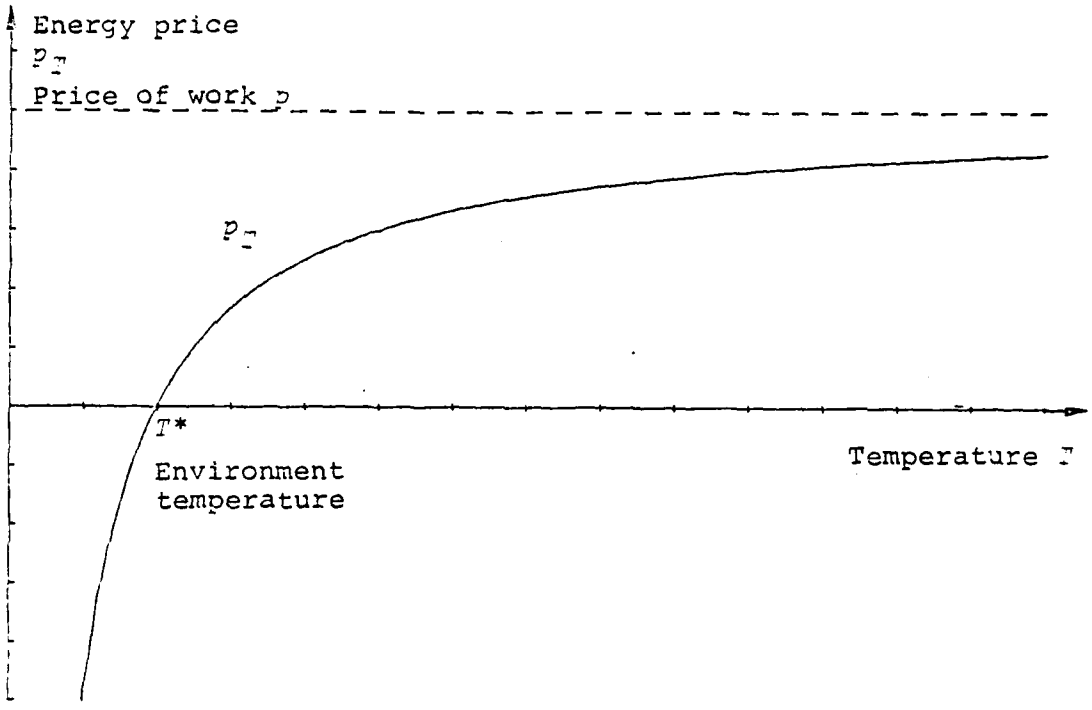

Figure 7.1. The value of energy as a function of absolute temperature

Up to now we have made no explicit reference to the exergy concept, our results being based on the second law constraint directly. However, we may easily make an exergetic interpretation of the price p_T expressing the economic value per heat unit of temperature T. If a flow of heat limited at Q_T were obtained from a single source outside of which there were an infinite environ-

ment of temperature T^*, the exergy power potential associated with this flow would be $E = \dot{Q}_T(1-T^*T^{-1})$ according to (4.90). Evaluating this potential at the exergy (work) price yields the economic value:

$$pE = p\dot{Q}_T(1-T^*T^{-1}) = p_T\dot{Q}_T \tag{7.24}$$

This means that *the price p_T per heat unit evaluates the amount of exergy this heat corresponds to at the given price of exergy* . (i e at the price of work). Although our economic model presented does not rest explicitly upon prior knowledge of the exergy concept, apparently its results are conveniently interpreted in terms of exergy. This indicates that exergy in fact could be defined from the economic model as an alternative to the physical definitions given previously. From (7.24) for instance, we could define the ratio $p_T\dot{Q}_Tp^{-1}$ as the exergy power potential. Either way, exergy must be interpreted as *the common scarce resource* in the system.

7.3. Example of schematic thermo-electrical power plant.

As a fairly concrete example of the considerations given in the previous section we shall analyze the basic economic relationships of an idealized thermo-electrical power plant. This plant is fed by a heat flux $\dot{Q}_1$ of temperature T_1 obtained for instance from burning fuels. Electric power (of exergy quality) is produced at a level $\dot{W}$ and "excess heat" of temperature T may be provided to a network for domestic heating purposes. Cooling the plant may also take place at zero cost and at a rate $\dot{Q}_0$ in the environment having temperature T_0. The plant produces a minimum entropy at a given rate $\hat{S}$. We diverge from our sign convention as to the heat flow $\dot{Q}_1$, defining it as positive when entering the plant. The unit cost of producing $\dot{Q}_1$ is given by the positive price p_1, the electricity price is denoted p and the price of heat for domestic purposes p_T. We assume that the heat influx is limited by a capacity ceiling $\hat{\dot{Q}}_1$, and disregard all operating and

capital costs apart from those incurred for purchasing Q_1. The thermo-electric plant is to maximize its profits which are denoted V. As in the previous section, for simplicity the dot notation is omitted for the flow quantities. The system is illustrated in figure 7.2.

Let us formulate our problem in the following way. The profits:

$$V = pW + p_T Q_T - p_1 Q_1 \tag{7.25}$$

are to be maximized by a suitable choice of W, Q_T, Q_0 and Q_1, subject to the constraints:

$$-W - Q_T - Q_0 + Q_1 = 0 \tag{7.26}$$

$$\frac{W}{\infty} + Q_T T^{-1} + Q_0 T_0^{-1} - Q_1 T_1^{-1} - \hat{S} \geq 0 \tag{7.27}$$

$$\hat{Q}_1 - Q_1 \geq 0 \tag{7.28}$$

$$W, Q_T, Q_0, Q_1 \geq 0 \tag{7.29}$$

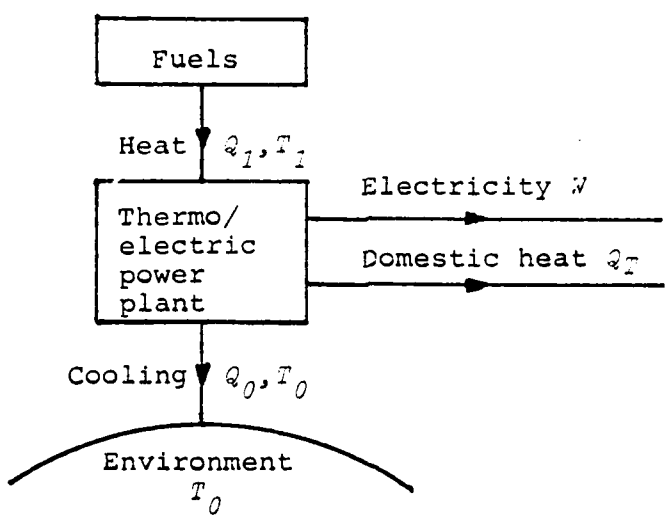

Figure 7.2. Energy fluxes related to schematic thermo-electric plant

We introduce the non-negative Lagrangean multipliers β, α, γ for the inequalities (7.26)-(7.28) and form the Lagrangean:

$$L = pW + p_T Q_T - p_1 Q_1 + \beta(-W - Q_T - Q_0 + Q_1) +$$

$$+ \alpha(Q_T T^{-1} + Q_0 T_0^{-1} - Q_1 T_1^{-1} - \hat{S}) + \gamma(\hat{Q}_1 - Q_1) \qquad (7.30)$$

The necessary and sufficient Kuhn-Tucker conditions of this maximization problem are as follows:

$$\frac{\partial L}{\partial W} = p - \beta \leq 0 \qquad (7.31)$$

$$\frac{\partial L}{\partial Q_T} = p_T - \beta + \alpha T^{-1} \leq 0 \qquad (7.32)$$

$$\frac{\partial L}{\partial Q_1} = -p_1 + \beta - \alpha T_1^{-1} - \gamma \leq 0 \qquad (7.33)$$

$$\frac{\partial L}{\partial Q_0} = -\beta + \alpha T_0^{-1} \leq 0 \qquad (7.34)$$

$$\frac{\partial L}{\partial \beta} = -W - Q_T - Q_0 + Q_1 = 0 \qquad (7.35)$$

$$\frac{\partial L}{\partial \alpha} = Q_T T^{-1} + Q_0 T_0^{-1} - Q_1 T_1^{-1} - \hat{S} \geq 0 \qquad (7.36)$$

$$\frac{\partial L}{\partial \gamma} = \hat{Q}_1 - Q_1 \geq 0 \qquad (7.37)$$

$$W, Q_T, Q_0, Q_1, \beta, \alpha, \gamma \geq 0 \qquad (7.38)$$

where equality in either of (7.31)-(7.37) must hold, if the corresponding variable in (7.38) is positive, and where the variable in question has a zero value, if its corresponding constraint is a strict inequality. Before analyzing the solution to this model, let us reintroduce short-hand notations for temperature-discounted prices. As we have shown in the previous section a zero price environment temperature is determined either by the temperature of a source that actually has the price zero (say at

temperature T_j), or by constructing an artificial source from two reference sources, one of which could be an infinite temperature source characterized by the exergy price p and $T=\infty$, the other characterized by some other price p_i and a finite temperature T_i.

For our purposes in this model, different environmental temperatures are of interest. Either we have the "natural" environment with zero price and temperature T_0, or we may construct artificial environments, A and B respectively, based on (p,∞) and (p_T,T), or on (p_1,T_1) and (p_T,T). Also, when the entropy constraint is ineffective and therefore $\alpha=0$, we must interput the environment as having a zero temperature $T^*=0$ (cf (7.21)). In such a case, heat of any temperature is of exergy quality and discounted prices take on their non-discounted values. The environment alternative based on (p,∞) and (p_1,T_1) appears to be of no significance in this example.

The following designation are introduced. The temperature-discounted price of source i having price p_i and temperature T_i, discounted with respect to the "natural" environment T_0 will be written:

$$\bar{p}_i = \frac{p_i}{1-T_0T_i^{-1}} \tag{7.39}$$

For the environment A defined by (p,∞) and (p_1,T_1), according to (17.18) its temperature will be:

$$T_A^* = T(1-\frac{p_T}{p}) \tag{7.40}$$

and for the environment B, it will be:

$$T_B^* = \frac{(p_1-p_T)TT_1}{p_1T_1-p_TT} \tag{7.41}$$

Discounted prices with respect to these artificial environments are denoted:

$$\bar{p}_i^A = \frac{p_i}{1-T_A^* T_i^{-1}} \tag{7.42}$$

$$\bar{p}_i^B = \frac{p_i}{1-T_B^* T_i^{-1}} \tag{7.43}$$

When the entropy constraint is ineffective and therefore $T^*=0$, we write the discounted prices:

$$\bar{p}_i^0 = p_i \tag{7.44}$$

Let us now consider the three thermodynamical constraints (7.35)-(7.37). A basic assumption of the model is that $T_0<T<T_1$. From these conditions we can distinguish four basic cases depending on the chosen levels of $\hat{S}$ and $\hat{Q}_1$.

Case I

$$Q_1(T_0^{-1}-T_1^{-1}) < \hat{S} \tag{7.45}$$

In this case there is no solution due to the feasible set being empty. The maximum available energy input $\hat{Q}_1$ does not suffice to provide the minimal entropy production by any means.

Case II

$$\hat{Q}_1(T_0^{-1}-T_1^{-1}) = \hat{S} \tag{7.46}$$

In this case there is the only solution $Q_1=Q_0=\hat{Q}_1$, $Q_T=W=0$ yielding the profits (a loss) amounting to $V=-p_1\hat{Q}_1$. This is a case of "pure resource disposal" or "pure entropy production", since no valuable output at all is created.

Case III

$$\hat{Q}_1(T^{-1}-T_1^{-1}) \leq \hat{S} < \hat{Q}_1(T_0^{-1}-T_1^{-1}) \tag{7.47}$$

This case provides a number of different solutions depending on the chosen values of the parameters p_1, p_T, p, $\hat{Q}_1$ and $\hat{S}$.

Case IV

$$0 \leq \hat{S} < \hat{Q}_1(T^{-1}-T_1^{-1}) \tag{7.48}$$

Also this case provides a variety of solutions.

In tables 7.2-7.5 all solutions in cases III, IV of this example are listed. As is seen, the number of different cases is quite extensive and it is easily found by inspection that the discounted prices play an extremely important rôle for determining the structure of the optimal plan. In order to simplify notations, the following abbreviations are used in the tables:

$$\underline{Q}_1 = \frac{\hat{S}}{T_0^{-1}-T_1^{-1}} \tag{7.49}$$

$$\bar{Q}_1 = \frac{\hat{S}}{T^{-1}-T_1^{-1}} \tag{7.50}$$

$$\underline{Q}_0 = \frac{\hat{S}-Q_1(T^{-1}-T_1^{-1})}{T_0^{-1}-T^{-1}} \tag{7.51}$$

$$\underline{Q}_T = \frac{Q_1(T_0^{-1}-T_1^{-1})-\hat{S}}{T_0^{-1}-T^{-1}} \tag{7.52}$$

$$x^+ = Max\{0,x\}, \text{ for any variable } x \tag{7.53}$$

When a variable z may be chosen freely within an interval $[x,y]$, i e $x \leq z \leq y$, the interval itself is shown.

By multiplying the optimization conditions (7.31) - (7.37) by their respective variables and adding these equations together, we obtain:

$$V = -\alpha\hat{S} + \gamma\hat{Q}_1 \tag{7.54}$$

from which the multipliers are interpreted as:

$$\alpha = -\frac{\partial V}{\partial \hat{S}} \tag{7.55}$$

$$\gamma = \frac{\partial V}{\partial \hat{Q}_1} \tag{7.56}$$

i e as sensitivities with respect to changes in the parameter values $\hat{S}$ and $\hat{Q}_1$. Only the signs of these multipliers are shown in the tables. The right-most column gives the temperature of the environment, interpreted for each case.

From the above results a number of conclusions may be drawn, one of the more important being the necessary conditions for W, or Q_T, or both W and Q_T taking on non-negative values. By inspecting the tables, we find that in order to have $W \geq 0$, either we need $\bar{p}_1 \leq p$ or, in case $p < \bar{p}_T$, $\bar{p}_1^B \leq p$, which means that the price of electricity must be at least as high as the discounted price of energy input. Also, in order to have $Q_T \geq 0$, we always need $\bar{p}_1 \leq \bar{p}_T$, i e the discounted price of domestic heat must reach at least the discounted price of energy input. Furthermore, if both W and Q_T are to be non-negative, then either we must have $p = \bar{p}_T \geq \bar{p}_1$, or, when the entropy generation rate is sufficiently low (case IV) either of $p_T < p < \bar{p}_T$ and $\bar{p}_1^B \leq p$ or $p_1 \leq p = p_T$. The latter two subcases might be interpreted as electricity being a side product of domestic heat.

Condition		Q_1	Q_0	Q_T	W	α	γ	V	T^*
	$\bar{p}_1 < p$	$\hat{Q}_1$	$T_0(\hat{Q}_1 T_1^{-1} + \hat{S})$	0	$T_0(\hat{Q}_1(T_0^{-1} - T_1^{-1}) - \hat{S})$	+	+	$(p-\bar{p}_1)\hat{Q}_1(1 - T_0 T_1^{-1}) - pT_0\hat{S}$	T_0
$\bar{p}_T < p$	$\bar{p}_1 = p$	$[\underline{Q}_1, \hat{Q}_1]$	$T_0(Q_1 T_1^{-1} + \hat{S})$	0	$T_0(Q_1(T_0^{-1} - T_1^{-1}) - \hat{S})$	+	0	$-pT_0\hat{S}$	T_0
	$p < \bar{p}_1$	$\underline{Q}_1$	$\underline{Q}_1$	0	0	+	0	$-\bar{p}_1 T_0\hat{S}$	T_0
	$\bar{p}_1 < \bar{p}_T$	$\hat{Q}_1$	$[Q_0^+, T_0(\hat{Q}_1 T_1^{-1} + \hat{S})]$	$T(\hat{Q}_1 T_1^{-1} - Q_0 T_0^{-1} + \hat{S})$	$T(\hat{Q}_1(T^{-1} - T_1^{-1}) + Q_0(T_0^{-1} - T^{-1}) - \hat{S})$	+	+	$(p-\bar{p}_1)\hat{Q}_1(1 - T_0 T_1^{-1}) - pT_0\hat{S}$	T_0
$\bar{p}_T = p$	$\bar{p}_1 = \bar{p}_T$	$[\underline{Q}_1, \hat{Q}_1]$	$[Q_0^+, T_0(Q_1 T_1^{-1} + \hat{S})]$	$T(Q_1 T_1^{-1} - Q_0 T_0^{-1} + \hat{S})$	$T(Q_1(T^{-1} - T_1^{-1}) + Q_0(T_0^{-1} - T^{-1}) - \hat{S})$	+	≥ 0	$-pT_0\hat{S}$	T_0
	$\bar{p}_T < \bar{p}_1$	$\underline{Q}_1$	$\underline{Q}_1$	0	0	+	0	$-\bar{p}_1 T_0\hat{S}$	T_0

Table 7.2. Solutions in cases III, IV for parameter values satisfying $\bar{p}_T \leq p$

AD-A104 628 NAVAL POSTGRADUATE SCHOOL MONTEREY CA F/G 5/3
TOWARDS A THEORETICAL BASIS FOR ENERGY ECONOMICS.(U)
AUG 80 R W GRUBBSTROM
UNCLASSIFIED NPS-54-80-015 NL

3 OF 4
AD
A104628

	Condition	Q_1	Q_0	Q_T	W	α	γ	V	T^*
Case III	$\bar{p}_1<\bar{p}_T$	$\hat{Q}_1$	$\underline{Q}_0$	$\underline{Q}_T$	0	+	+	$(\bar{p}_T-\bar{p}_1)\hat{Q}_1(1-T_0T_1)-\bar{p}_1T_0\hat{S}$	T_0
	$\bar{p}_1=\bar{p}_T$	$[\underline{Q}_1,\hat{Q}_1]$	$\underline{Q}_0$	$\underline{Q}_T$	0		0	$-\bar{p}_1T_0\hat{S}$	T_0
	$\bar{p}_T<\bar{p}_1$	$\underline{Q}_1$	$\underline{Q}_1$	0	0	+	0	$-\bar{p}_1T_0\hat{S}$	T_0
Case IV	$\bar{p}_1^B<p$	$\hat{Q}_1$	0	$T(\hat{Q}_1T_1^{-1}+\hat{S})$	$T(\hat{Q}_1(T^{-1}-T_1^{-1})-\hat{S})$	+	+	$(p-\bar{p}_1^A)\hat{Q}_1(1-T_A^*T_1^{-1})-pT_A^*\hat{S}$	T_A^*
	$\bar{p}_1^B=p$	$[\bar{Q}_1,\hat{Q}_1]$	0	$T(Q_1T^{-1}+\hat{S})$	$T(Q_1(T^{-1}-T_1^{-1})-\hat{S})$	+	0	$-pT_A^*\hat{S}$	T_A^*
	$p<\bar{p}_1^B$, $\bar{p}_1<\bar{p}_T$	$\bar{Q}_1$	0	0	0	+	0	$-\bar{p}_1^BT_B^*\hat{S}$	T_B^*
	$\bar{p}_1=\bar{p}_T$	$[\underline{Q}_1,\bar{Q}_1]$	$\underline{Q}_0$	0	0	+	0	$-\bar{p}_TT_0\hat{S}$	T_0
	$\bar{p}_T<\bar{p}_1$	$\underline{Q}_1$	$\underline{Q}_1$	0	0	+	0	$-\bar{p}_1T_0\hat{S}$	T_0

Table 7.3. Solutions in cases III, IV for parameter values satisfying $p_T < p < \bar{p}_T$

Condition	Q_1	Q_0	Q_T	W	α	β	V	T^*
$\bar{p}_1<\bar{p}_T$	$\hat{Q}_1$	$\underline{Q}_0$	Q_T	0	$+$	$+$	$(\bar{p}_T-\bar{p}_1)\hat{Q}_1(1-T_0T_1^{-1})-\bar{p}_1T_0\hat{S}$	T_0
Case III $\bar{p}_1=\bar{p}_T$	$[\underline{Q}_1,\hat{Q}_1]$	$\underline{Q}_0$	$\underline{Q}_T$	0	$+$	0	$-\bar{p}_1T_0\hat{S}$	T_0
$\bar{p}_T<\bar{p}_1$	$\underline{Q}_1$	$\underline{Q}_1$	0	0	$+$	0	$-\bar{p}_1T_0\hat{S}$	T_0
$p_1<p_T$	$\hat{Q}_1$	0	$[T(\hat{Q}_1T_1^{-1}+\hat{S}),\hat{Q}_1]$	Q_1-Q_T	0	$+$	$(p-\bar{p}_1^0)\hat{Q}_1$	0
$p=p_T$	$[\bar{Q}_1,\hat{Q}_1]$	0	$[T(Q_1T_1^{-1}+\hat{S}),Q_1]$	Q_1-Q_T	0	0	0	0
Case IV $\begin{cases} p_T<p_1 \\ \bar{p}_1<\bar{p}_T \end{cases}$	$\bar{Q}_1$	0	$\bar{Q}_1$	0	$+$	0	$-\bar{p}_1^BT_B^*\hat{S}$	T_B^*
$\bar{p}_1=\bar{p}_T$	$[\underline{Q}_1,\bar{Q}_1]$	$\underline{Q}_0$	$\underline{Q}_T$	0	$+$	0	$-\bar{p}_1T_0\hat{S}$	T_0
$\bar{p}_T<\bar{p}_1$	$\underline{Q}_1$	$\underline{Q}_1$	0	0	$+$	0	$-\bar{p}_1T_0\hat{S}$	T_0

Table 7.4. Solutions in cases III, IV for parameter values satisfying $p = p_T$

Condition		Q_1	Q_0	Q_T	W	α	γ	V	T^*
Case III	$\bar{p}_1<\bar{p}_T$	$\hat{Q}_1$	$\underline{Q}_0$	$\underline{Q}_T$	0	$+$	$+$	$(\bar{p}_T-\bar{p}_1)\hat{Q}_1(1-T_0T_1^{-1})-\bar{p}_1T_0\hat{S}$	T_0
	$\bar{p}_1=\bar{p}_T$	$[\underline{Q}_1,\hat{Q}_1]$	$\underline{Q}_0$	$\underline{Q}_T$	0	$+$	0	$-\bar{p}_TT_0\hat{S}$	T_0
	$\bar{p}_T<\bar{p}_1$	$\underline{Q}_1$	$\underline{Q}_1$	0	0	$+$	0	$-\bar{p}_1T_0\hat{S}$	T_0
Case IV	$p_1<p_T$	$\hat{Q}_1$	0	$\hat{Q}_1$	0	0	$+$	$(\bar{p}_T^0-\bar{p}_1^0)\hat{Q}_1$	0
	$p_1=p_T$	$[\bar{Q}_1,\hat{Q}_1]$	0	Q_1	0	0	0	0	0
	$\begin{cases} p_T<p_1 \\ p_1<\bar{p}_T \end{cases}$	$\bar{Q}_1$	0	$\bar{Q}_1$	0	$+$	0	$-\bar{p}_1^BT_B^*\hat{S}$	T_B^*
	$\bar{p}_1=\bar{p}_T$	$[\underline{Q}_1,\bar{Q}_1]$	$\underline{Q}_0$	$\underline{Q}_T$	0	$+$	0	$-\bar{p}_TT_0\hat{S}$	T_0
	$\bar{p}_T<\bar{p}_1$	$\underline{Q}_1$	$\underline{Q}_1$	0	0	$+$	0	$-\bar{p}_1T_0\hat{S}$	T_0

Table 7.5. Solutions in cases III, IV for parameter values satisfying $p < p_T$

7.4. Economic model of energy extraction from a system of finite heat sources.

The model to be treated below is based on the $(N+1)$-source system described in section 4.2. Apart from introducing prices, the notations will the same as applied previously with $T_i, T_i^0, c_i(T_i)$ being temperatures, initial temperatures (all different) and heat capacities of source i, $\dot{\hat{S}}$ the given minimal rate of entropy production, $\hat{W}$ the given minimal amount of work to be extracted, p_i the *constant* price of heat from/to source i, p the constant price of work. Asterisks, as before, will denote final values of the respective variables. When there is no risk for any confusion these will be omitted.

Our problem is to minimize the total cost for providing at least the work output $\hat{W}$ subject to the second law entropy constraint. Therefore we wish to find temperatures (and possibly their time paths) that minimize:

$$C = -\sum_{i=0}^{N} p_i \int_{T_i^0}^{T_i^*} c_i(T_i)dT_i \tag{7.57}$$

subject to:

$$\sum_{i=0}^{N} \int_{T_i^0}^{T_i^*} c_i(T_i)dT_i + \hat{W} \leq 0 \tag{7.58}$$

$$-\sum_{i=0}^{N} \frac{c_i(T_i)}{T_i}dT_i + \dot{\hat{S}}dt \leq 0 \tag{7.59}$$

Introducing the multiplier $\beta \geq 0$ and the multiplier function $\alpha(t) \geq 0$, we form the Lagrangean:

$$L = -\sum_{i=0}^{N} p_i \int_0^\infty c_i(T_i)\dot{T}_i dt + \beta\left(\sum_{i=0}^{N} \int_0^\infty c_i(T_i)\dot{T}_i + \hat{W}\right) -$$

$$- \int_0^\infty \alpha(t)\left(\sum_{i=0}^{N} c_i(T_i) \frac{\dot{T}_i}{T_i} - \dot{\hat{S}}\right)dt \tag{7.60}$$

The associated Hamiltonian function is:

$$H(T_i, T_i, t) = -\left(p_i - \beta + \frac{\alpha(t)}{T_i}\right) c_i\dot{T}_i + \alpha(t)\dot{\hat{S}} \tag{7.61}$$

and the Eulerian equations then become:

$$\frac{\partial H}{\partial T_i} - \frac{d}{dt}\frac{\partial H}{\partial \dot{T}_i} = -\dot{\alpha}\frac{c_i(T_i)}{T_i} = 0 \tag{7.62}$$

exactly the corresponding result as in (4.13). However, $\alpha(t)$ in this context is slightly differently interpreted due to our now having a cost function as our objective function. Since $c_i, T_i \neq 0$, we obtain:

$$\alpha = const \tag{7.63}$$

which enables us to bring α outside of the integral in which it appears in (7.60). This gives us the possibility to write our Lagrangean function in the form:

$$L = -\sum_{i=0}^{N} \int_{T_i^0}^{T_i^*} \left(p_i - \beta + \frac{\alpha}{T_i}\right) c_i(T_i)dT_i + \beta\hat{W} + \alpha\hat{S} \tag{7.64}$$

The necessary minimization conditions will then be:

$$\frac{\partial L}{\partial T_i} = -\left(p_i - \beta + \frac{\alpha}{T_i}\right) c_i(T_i) = 0, \quad i=0,1,\ldots,N \tag{7.65}$$

$$\frac{\partial L}{\partial \beta} = \sum_{i=0}^{N} \left(U_i(T_i) - U_i(T_i^0) + \hat{W}\right) \leq 0 \tag{7.66}$$

$$\frac{\partial L}{\partial \alpha} = \hat{S} - \sum_{i=0}^{N} (S_i(T_i) - S_i(T_i^0)) \leq 0 \tag{7.67}$$

$$\beta, \alpha \geq 0 \tag{7.68}$$

where U_i (internal energy) and S_i (entropy of source) are the monotonically increasing primitive functions of $c_i(T_i)$ and $c_i(T_i)T_i^{-1}$ respectively, as already defined in section 4.2. Eq (7.65) has also exactly the same implications as (7.5). However, in our present case, we do not know in advance that all T_i throughout are different, as was assumed before.

From (7.65) we easily find that $p_i = p_j$ for sources i and j implies and is implied by $T_i = T_j$, i e equal final temperatures, and that $p_i > p_j$ implies and is implied by $T_i > T_j$. Comparing sources of different price, and therefore of different temperature, we can write:

$$\beta = \frac{p_i T_i - p_j T_j}{T_i - T_j} \geq 0, \text{ for all } i,j \text{ for which } p_i \neq p_j \tag{7.69}$$

$$\alpha = \frac{T_i T_j}{T_i - T_j} (p_i - p_j) \geq 0, \text{ for all } i,j \text{ for which } p_i \neq p_j \tag{7.70}$$

which are the same as (7.9)-(7.10). Therefore, if at least two prices are different we must have:

$$\beta, \alpha > 0 \tag{7.71}$$

making (7.66)-(7.67) into equalities. We assume this is the case in the following.

Inserting the solution $T_i = \alpha/(\beta - p_i)$ into (7.66)-(7.67), we obtain the two equations:

$$\sum_{i=0}^{N} U_i\left(\frac{\alpha}{\beta - p_i}\right) = \sum_{i=0}^{N} U_i(T_i^0) - \hat{W} \tag{7.72}$$

$$\sum_{i=0}^{N} c_i\left(\frac{\alpha}{\beta-p_i}\right) = \sum_{i=0}^{N} c_i(T_i^0) + \hat{S} \tag{7.73}$$

from which the two unknowns β, α may be solved, if the functions U_i and S_i meet certain requirements. Differentiating the left-hand members of (7.72) and (7.73) with respect to β and to α, we obtain the Jacobian:

$$J = \sum_{i=0}^{N} \sum_{j=0}^{N} \frac{c_j c_i}{\beta-p_j} \left((\beta-p_i)^{-1}-(\beta-p_j)^{-1}\right) =$$

$$= -\frac{1}{2} \sum_{j\neq i}^{N} \sum_{i=0}^{N} \frac{c_j c_i (p_i-p_j)^2}{(\beta-p_j)^2(\beta-p_i)^2} < 0 \tag{7.74}$$

Hence, in the case that at least two prices differ, there will be a unique solution in β and α, if such a solution exists.

In (7.58) the work output constraint is given. It is evident that $\hat{W}$ must at most be as high as the maximal work output W_{max} as given by (4.20) in section 4.2. From that section we also know that there is a unique solution stating that all final temperatures must be equal to a function of initial temperatures T_i^0 and total entropy production $\hat{S}$ according to (4.19). Therefore, if we choose $\hat{W}=W_{max}$ in our present model, the solution to (7.65)-(7.67) must coincide with the solution to (4.16) (apart from the fact that the multiplier α has different connotations in the two models). Since the equations (7.66)-(7.67) exactly correspond to the middle condition in (4.16) and (4.20), the remaining equations to compare must yield identical results. That all final temperatures are equal implies by (7.65) that all prices p_i must be equal. If this would be the case, then by (7.57)-(7.58) we find that $C=p\hat{W}$ (where p is the mutual price) which is entirely independent of any choice, and economically meaningsless, at least if there is some source of free energy at an environmental temperature.

When we increase the requirement level $\hat{W}$, the range within which

the different prices may vary will successively be narrowed down to a single value. This result appears to be counter-intuitive. Treating the right-hand members of (7.72) and (7.73) as constants, we may study how α depends on β according to these two equations. By the mean value theorem we find the solutions:

$$\alpha = U^{-1}\left(\sum_{i=0}^{N} U_i(T_i^0)-\hat{N}\right)(\beta-\bar{p}) = A_1(\beta-\bar{p}) \tag{7.75}$$

and:

$$\alpha = S^{-1}\left(\sum_{i=0}^{N} U_i(T_i^0)+\hat{S}\right)(\beta-\underline{p}) \tag{7.76}$$

where $\bar{p}$ and $\underline{p}$ are mean prices (bounded) depending in general on β:

$$\underset{i}{Min}\ p_i \leq \underline{p},\bar{p} \leq \underset{i}{Max}\ p_i \tag{7.77}$$

and where U^{-1} and S^{-1} are the inverse functions of $U(x) = \sum_{i=0}^{N} U_i(x)$ and $S(x) = \sum_{i=0}^{N} S_i(x)$ and A_1, A_2 abbreviations for the coefficients preceding $(\beta-\bar{p}),(\beta-\underline{p})$.

A straight-forward differentiation of (7.75)-(7.77) gives us the following derivatives:

$$\frac{d\alpha}{d\beta} = A_1\frac{(\beta-\bar{p})\sum_{i=0}^{N} c_i(\beta-p_i)^{-2}}{\sum_{i=0}^{N} c_i(\beta-p_i)^{-1}} \tag{7.78}$$

$$\frac{d\alpha}{d\beta} = A_2\frac{(\beta-\underline{p})\sum_{i=0}^{N} c_i(\beta-p_i)^{-1}}{\sum_{i=0}^{N} c_i} \tag{7.79}$$

where the c_i are evaluated at $T_i = \alpha(\beta-p_i)^{-1}$. For large values of β the two functions will approach linear functions having the coefficients A_1, A_2, whereas when β approaches $\underset{i}{Max}\ p_i$ from above, α will tend towards zero and $\frac{d\alpha}{d\beta}$ behave as $\alpha(\beta-p^*)$ and

$\alpha(\beta^*/\sum_{i=0}^{N} c_i)(\beta-p^*)$ respectively, where p^* is the maximum price and c^* the corresponding heat capacity of that source. Therefore the former function will behave as $const\cdot(\beta-p^*)$ and the latter as $const\cdot(\beta-p^*)^{\frac{c^*}{c}}$ for values of β close above p^*, where $c=\sum_{i=0}^{n} c_i$. Hence the latter function is greater than the former for values of β sufficiently close to p^* and a sufficient condition for intersection is therefore:

$$S^{-1}(\sum_{i=0}^{N} S_i(T_i^0)+\hat{S}) < U^{-1}(\sum_{i=0}^{N} U_i(T_i^0)-\hat{W}) \tag{7.80}$$

Since S^{-1} and U^{-1} are monotonically increasing functions, this is precisely the condition that $\hat{W}$ does not exceed W_{max} in (4.20), as is seen from (4.19) and (4.20).

Our conclusion is therefore that if $\hat{W}$ is chosen below the maximum work output, there will exist a unique solution to our problem, i e a unique solution in β and α, although the time path of the temperatures are irrelevant.

A complete treatment of tracing the effects of changes in given conditions in changes in the derived results would be very extensive. We shall therefore limit our treatment to a few basic results. The given conditions in this model are described by the following variables: prices p_i, minimum work extraction $\hat{W}$, minimal entropy production $\hat{S}$, initial temperatures T_i^0, and also heat capacity functions $c_i(T_i)$. The derived results are described by the minimum cost C, the final temperatures T_i^* and the multipliers β and α.

By differentiating the optimality conditions with respect to all variables, we obtain the following equation describing how total cost is affected by δC from changes in parameters by δp_i, $\delta\hat{W}$, $\delta\hat{S}$ and δT_i^0:

$$\delta C = \sum_{i=0}^{N} \delta p_i (U_i(T_i^0) - U_i(T_i^*)) +$$

$$+ \beta \delta \hat{W} + \alpha(\delta \hat{S} + \sum_{i=0}^{N} c_i(T_i^0)(T_i^{0-1} - T_i^{*-1}) \delta T_i^0 \tag{7.81}$$

Hence we obtain the following results:

$$\frac{\partial C}{\partial \hat{W}} = \beta \tag{7.82}$$

$$\frac{\partial C}{\partial \hat{S}} = \alpha \tag{7.83}$$

$$\frac{\partial C}{\partial T_{i0}} = \alpha c_i(T_i^0)(T_i^{0-1} - T_i^{*-1}) \tag{7.84}$$

$$\frac{\partial C}{\partial p_i} = U_i(T_i^0) - U_i(T_i^*) \tag{7.85}$$

Therefore, costs will rise if $\hat{W}$ or $\hat{S}$ are raised and will also rise if an initial temperature T_i^0 below the corresponding perature T_i^* is raised, or if the price of a source with an initial temperature above its final temperature is raised, etc.

By performing a total differentiation of the optimization conditions and collecting dependent differentials in the left-hand member and independent differentials (of parameters) in the right-hand member, the resulting relationships may be contained in the matrix-vector equation:

$$
\begin{pmatrix}
\frac{c_0}{T_0^2} & 0 & \cdots & 0 & c_0 & \frac{c_0}{T_0} \\
0 & \frac{c_1}{T_1^2} & \cdots & 0 & c_1 & \frac{c_1}{T_1} \\
 & & \ddots & \vdots & \vdots & \vdots \\
0 & 0 & & \frac{c_N}{T_N^2} & c_N & \frac{c_N}{T_N} \\
c_0 & c_1 & \cdots & c_N & 0 & 0 \\
\frac{c_0}{T_0} & \frac{c_1}{T_1} & \cdots & \frac{c_N}{T_N} & 0 & 0
\end{pmatrix}
\begin{pmatrix}
\delta T_0 \\ \delta T_1 \\ \vdots \\ \delta T_N \\ \delta\beta/\alpha \\ -\delta\alpha/\alpha
\end{pmatrix}
= \frac{1}{\alpha}
\begin{pmatrix}
c_0 \delta p_0 \\ c_1 \delta p_1 \\ \vdots \\ c_N \delta p_N \\ \alpha\left(\sum_{i=0}^{N} c_i(T_i^0)\delta T_i^0 - \delta\hat{W}\right) \\ \alpha\left(\sum_{i=0}^{N} \frac{c_i(T_i^0)}{T_i^0}\delta T_i^0 + \delta\hat{S}\right)
\end{pmatrix}
\tag{7.86}
$$

All c_i for which the arguments hav been omitted are evaluated at the final temperatures $T_i = \alpha(\beta - p_i)^{-1}$, all asterisks having been omitted. Let us use the short-hand notation $\hat{H}$ for the symmetric bordered Hessian matrix in the left-hand member.

On multiplying both members by the row vector $(\delta T_0, \delta T_1, \ldots, \delta T_N, \delta\beta/\beta, -\delta\alpha/\alpha)$ and using the relations:

$$
\sum_{i=0}^{N} c_i \delta T_i = \sum_{i=0}^{N} c_i(T_i^0)\delta T_i^0 - \delta\hat{W} \tag{7.87}
$$

$$
\sum_{i=0}^{N} \frac{c_i}{T_i} \delta T_i = \sum_{i=0}^{N} \frac{c_i(T_i^0)}{T_i^0} \delta T_i^0 + \delta\hat{S} \tag{7.88}
$$

we obtain:

$$
\sum_{i=0}^{N} \frac{c_i}{T_i^2} \delta T_i^2 = \alpha^{-1} \sum_{i=0}^{N} c_i \delta p_i \delta T_i - \frac{d\beta}{\beta}\left(\sum_{i=0}^{N} c_i(T_i^0)\delta T_i^0 - \delta\hat{W}\right) +
$$

$$
+ \frac{\delta\alpha}{\alpha}\left(\sum_{i=0}^{N} \frac{c_i(T_i^0)}{T_i^0} \delta T_i^0 + \delta\hat{S}\right) \tag{7.89}
$$

which is greater than zero, if at least one final temperature is affected by changes in given parameters. From this relation we therefore obtain som general results such as the following. An individual change in $\hat{W}$ by $\delta\hat{W}$ will necessarily give rise to a change in β by $\delta\beta$ in the same direction, as will an individual $\delta\hat{S}>0$ yield a $\delta\alpha>0$. Hence:

$$\frac{\partial\beta}{\partial\hat{W}} > 0 \tag{7.90}$$

$$\frac{\partial\alpha}{\partial\hat{S}} > 0 \tag{7.91}$$

Similarly we find:

$$\frac{\partial T_i}{\partial p_i} < 0 \tag{7.92}$$

i e that the optimal final temperature of one source will increase with an increase in its price (or a lower negative price) of that source. On combining (7.90)-(7.91) with (7.82)-(7.83) we also find:

$$\frac{\partial^2 C}{\partial\hat{W}^2} > 0 \tag{7.93}$$

$$\frac{\partial^2 C}{\partial\hat{S}^2} > 0 \tag{7.94}$$

which means that total costs will be convex (progressively increasing) in work output as well as in entropy production.

Also in this model β may be interpreted as the (marginal) value of work since it shows the increase in minimal cost from a marginal increase in work output as explained by (7.90). If some source were to have an infinite final temperature $T_i=\infty$, we would also find $p_i=\beta$ for that source from (7.65).

If the heat capacity of one of the sources (for convenience source 0) tends towards infinity, $c_0 \to \infty$, by a similar reasoning as in section 4.2 we find that $T_0 = T_0^0$, i e that no temperature change occurs for this source. Therefore:

$$\alpha = T_0^0(\beta - p_0) = T_i(\beta - p_i), i \geq 1 \tag{7.95}$$

This provides a relationship between final temperatures T_i and the multiplier β. A limit value treatment of (7.72)-(7.73) yields:

$$\sum_{i=1}^{N} \left(U_i(T_i^0) - U_i\left(\frac{T_0^0(\beta - p_0)}{\beta - p_i} \right) - T_0^0\left(S_i(T_i^0) - S_i\left(\frac{T_0^0(\beta - p_0)}{\beta - p_i} \right)\right) \right) = \tag{7.96}$$

$$= \hat{W} + T_0^0 \hat{S}$$

which determines β implicitly. The left-hand member then describes that portion of the exergy potential that is consumed for extracting $\hat{W}$ and loosing $T_0^0\hat{S}$ in producing the entropy $\hat{S}$. Futher explicitness in these results does not appear to be found if constant heat capacities were to be assumed.

It must be pointed out that the model treated above rests on the assumption of *constant* prices, which are shown to be related to the corresponding *final* temperatures. In our previous model of section 7.2 treating infinite sources (with constant temperatures) it was shown that temperatures and prices had to be related in such a way as to make all temperature-discounted prices equal. In our present model temperatures must of course vary during the process of extraction. Intuitively, this would suggest that prices should vary with temperatures during the process of extraction in order to obtain an economically meaningful model, not only be related to the final temperatures. We shall refrain from such an analysis until section 7.6 where the present model will be generalized to treating a system of ideal gas sources characterized by temperatures as well as volumes (or pressures). There it will be shown that prices indeed need to be related to the current temperatures during the process of extraction in order for the model to yield economically meaningful results.

7.5. Economic model of energy extraction from primary production factors transformed by non-linear production functions.

The model to be treated in this section will be different in nature as compared with those of our previous sections. Below we shall be dealing with flows of three kinds, two of which refer to energy. As input flows we have *primary production factors* which might or might not be energy-related. Examples of such resources may be fuels, manpower, capital equipment etc. These are transformed by means of non-linear production functions into *primary energy flows*, such as burning fuels in order to provide heat. Primary energy flows in their turn, are transformed into *secondary energy flows*, which are interpreted as flows of energy in useful forms for industrial or domestic purposes. This latter transformation is described by linear relationships describing the thermodynamic transformation opportunities available. Examples of the latter kind of process are heat/turbine power and heat/turbine power/electricity transformations, etc.

The primary production factors in volumes $x_{1k}, x_{2k}, \ldots, x_{Kk}$ for process k are purchased at a given set of positive prices $c_1, c_2, \ldots, c_K$ and transformed into primary energy flows $y_1, y_2, \ldots, y_M$. These are then transformed into secondary energy flows $z_1, z_2, \ldots, z_N$, which are sold at the given constant positive prices $p_1, p_2, \ldots, p_N$. The kth primary process is characterized by some non-linear production function Φ_k:

$$y_k = \Phi_k(x_{1k}, x_{2k}, \ldots, x_{Kk}) \tag{7.97}$$

and it is assumed that there is only one process available to extract each kind of primary energy. The total factor volume of kind j is denoted x_j. The amount of primary energy of kind k, i e y_k, may be transformed into secondary energy of any kind l. We shall use temperatures alone to describe the property defining the kind of energy. The fraction y_{kl} of y_l is used for obtaining secondary energy of kind l in the amount z_{kl}. This transformation

is characterized by a second order efficiency $0 \leq \xi_{kl} \leq 1$, given the maximum amount of remaining exergy compared with the exergy consumed:

$$\xi_{kl} = \frac{(1-T^*T_l^{-1})z_{kl}}{(1-T^*T_k^{-1})y_{kl}} \tag{7.98}$$

where $\xi_{kl}=1$ for a reversible process and where T^* is the single given constant environment temperature. This model does therefore not obey the symmetry principle.

The transformations taking place from primary to secondary energy are therefore linear, when all ξ_{kl} are constant. It has been mentioned that the secondary processes transform energy of kind k into energy of kind l (having temperatures T_k and T_l respectively). If there is no other kind of energy output we would have to have $T_k > T_l$ according to the second law:

$$-\frac{y_{kl}}{T_k} + \frac{z_{kl}}{T_l} = z_{kl}(T_l^{-1} - T_k^{-1}) = \hat{S}_{kl} \geq 0 \tag{7.99}$$

Hence the entropy production rate $\hat{S}_{kl}$ would be given by the two temperatures and the level of output z_{kl}. The second-order efficiency would then be:

$$\xi_{kl} = \left(1 - \frac{T^*\hat{S}_{kl}}{z_{kl}(1-T^*T_k^{-1})}\right) = T^*\frac{T_k(T_l-T^*)}{T_l(T_k-T^*)} \tag{7.100}$$

which shows that the second-order efficiency in such a case would be determined by the two temperatures together with the environment temperature and therefore cannot be chosen independently for the transformation under consideration. Also we must require $T^* < T_k, T_l$ or $T^* > T_k, T_l$.

We shall therefore allow the secondary processes to interact with the environment such as is shown in figure 7.3.

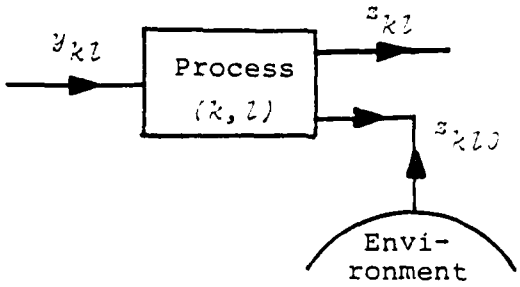

Figure 7.3. Flows associated with secondary process transforming energy of kind k into energy of kind l

Allowing for an environmental interaction (heat losses, heat pumping energy from environment, etc) we may choose ξ_{kl} independently of the temperatures involved. The relationship between entropy production $\hat{S}_{kl}$ and efficiency ξ_{kl} will then read:

$$\hat{S}_{kl} = (1-\xi_{kl})(T^{*-1}-T_k^{-1})y_{kl} \tag{7.101}$$

The entropy production rate will still be proportional to the input level y_{kl} and also to the output level z_{kl}.

In the following all temperatures and all efficiencies will be given. Hence, as soon as one flow in figure 7.3 is known, so are also the other two flows as well as the entropy production rate.

The problem we are to study is to choose optimal values of all $x_{jk}, y_k, y_{kl}, z_{kl}$ and z_l, such that the profits:

$$V = \sum_{l=1}^{N} p_l z_l - \sum_{j=1}^{K} c_j x_j \tag{7.102}$$

are maximized subject to the constraints:

$$\sum_{k=1}^{M} x_{jk} = x_j \tag{7.103}$$

$$y_k \le \Phi_k(x_{1k}, x_{2k}, \ldots, x_{Kk}) \tag{7.104}$$

$$\sum_{l=1}^{N} y_{kl} = y_k \tag{7.105}$$

$$(1-T^*T_l^{-1})z_{kl} \le \xi_{kl}(1-T^*T_k^{-1})y_{kl} \tag{7.106}$$

$$\sum_{k=1}^{M} z_{kl} = z_l \tag{7.107}$$

where we have used inequalities in (7.104) and (7.106), which will be shown to be equalities at the optimum. Figure 7.4 illustrates the overall system treated.

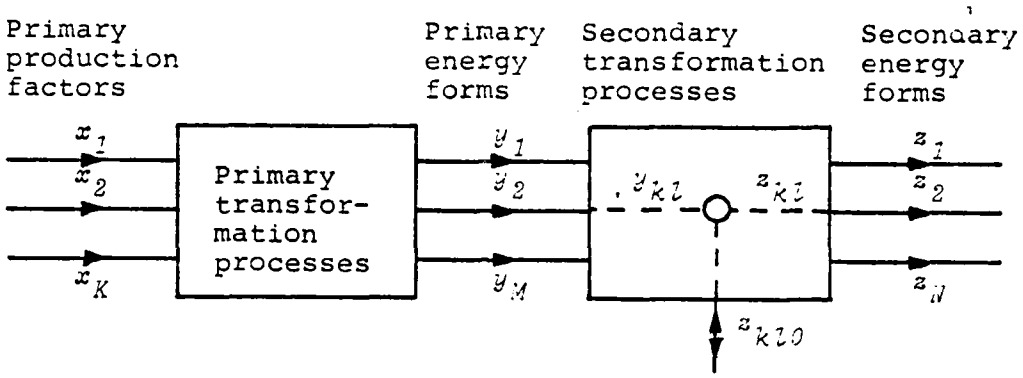

Figure 7.4. Overview of model treated

In order to form a Lagrangean, we eliminate the variables x_{jk}, y_k and z_l, using (7.103), (7.105), (7.107) and introduce non-negative multipliers α_k and β_{kl} for each of the inequalities in (7.104) and (7.106) respectively:

$$L = \sum_{l=1}^{N} p_l \sum_{k=1}^{M} z_{kl} - \sum_{j=1}^{K} c_j \sum_{k=1}^{M} x_{jk} +$$

$$+ \sum_{k=1}^{M} \alpha_k (\Phi_k - \sum_{l=1}^{N} y_{kl}) +$$

$$+ \sum_{k=1}^{M} \sum_{l=1}^{N} \beta_{kl}(\xi_{kl}(1-T^*T_k^{-1})y_{kl} - (1-T^*T_l^{-1})z_{kl}) \tag{7.108}$$

Writing for short $\Phi_{jk} = \frac{\partial \Phi_k}{\partial x_{jk}}$, the necessary Kuhn-Tucker conditions will be the following:

$$\frac{\partial L}{\partial x_{jk}} = -c_j + \alpha_k \Phi_{jk} \leq 0 \tag{7.109}$$

$$\frac{\partial L}{\partial y_{kl}} = -\alpha_k + \beta_{kl}\xi_{kl}(1-T^*T_k^{-1}) \leq 0 \tag{7.110}$$

$$\frac{\partial L}{\partial z_{kl}} = p_l - \beta_{kl}(1-T^*T_l^{-1}) \leq 0 \tag{7.111}$$

$$\frac{\partial L}{\partial \alpha_k} = \Phi_k - \sum_{l=1}^{N} y_{kl} \geq 0 \tag{7.112}$$

$$\frac{\partial L}{\partial \beta_{kl}} = \xi_{kl}(1-T^*T_k^{-1})y_{kl} - (1-T^*T_l^{-1})z_{kl} \geq 0 \tag{7.113}$$

$$x_{jk}, y_{kl}, z_{kl}, \alpha_k, \beta_{kl} \geq 0 \tag{7.114}$$

where equalities hold in (7.109)-(7.113) for positive values of the variables concerned and where strict inequalities therefore imply zero-valued corresponding variables in (7.114).

Let us assume for simplicity the usual production function conditions that all marginal productivities are non-negative and that the functions are concave:

$$\Phi_{jk} \geq 0 \tag{7.115}$$

$$d^2\Phi_k < 0 \tag{7.116}$$

where the latter inequality holds for any non-zero displacement in the argument of Φ_k. We also assume the possibility of inactivity $\Phi_k(0)=0$.

Combining (7.109)-(7.111), we obtain the fundamental inequality:

$$\frac{p_l}{1-T^*T_l^{-1}} \leq \beta_{kl} \leq \frac{\alpha_k}{\xi_{kl}(1-T^*T_k^{-1})} \leq \frac{c_j}{\Phi_{jk}\xi_{kl}(1-T^*T_k^{-1})} \tag{7.117}$$

which holds for all combinations of index values j,k,l. The left-hand member is seen to be the temperature-discounted price of energy of temperature T_l, which, as before, we write shorter as $\bar{p}_l$.

If primary process k is running, then for any $x_{jk}>0$ (of which there is at least one) we have from (7.117):

$$\frac{c_j}{\Phi_{jk}} = \alpha_k = \underset{i}{Min}\ \frac{c_i}{\Phi_{ik}} \tag{7.118}$$

If several factors are used in running process k, their values of c_j/Φ_{jk} will all be equal and minimal. For some l there will be a secondary energy output $z_{kl}>0$ if process k is running, which implies:

$$\bar{p}_l = \beta_{kl} = \frac{\alpha_k}{\xi_{kl}(1-T^*T_k^{-1})} = \frac{c_j}{\Phi_{jk}\xi_{kl}(1-T^*T_k^{-1})} \tag{7.119}$$

Hence if energy of kind l is produced:

$$\bar{p}_l = \underset{m}{Min}\ \underset{i}{Min}\ \frac{c_i}{\Phi_{im}\xi_{ml}(1-T^*T_m^{-1})} \tag{7.120}$$

This means that for each process m under consideration, we choose only factors i giving a lowest ratio c_i/Φ_{im}, i e a highest marginal output per amount paid, this lowest ratio being the marginal cost of energy from process m. This marginal cost is then discounted with respect to the temperature of the output of process m, by multiplying by the factor $(1-T^*T_m^{-1})^{-1}$ and also adjusted for the efficiency ξ_{ml} in transforming from kind m to kind l. Only such processes m can be chosen for which the lowest efficiency adjusted temperature-discounted marginal cost reaches down to the temperature-discounted output price.

If factor j is used at all, i e $x_j>0$, then for some value of l and some value of k we must have:

$$\bar{p}_l \xi_{kl} (1 - T^* T_k^{-1}) \Phi_{kj} = e_j \tag{7.121}$$

which by (7.117) implies:

$$e_j = \underset{m}{Max} \; \underset{n}{Max} \; \bar{p}_n \xi_{mn} (1 - T^* T_m^{-1}) \Phi_{mj} \tag{7.122}$$

This shows that the highest revenues from employing factor j will be obtained by evaluating the marginal revenue products $\bar{p}_n \xi_{mn} (1 - T^* T_m^{-1}) \Phi_{mj}$ for different primary and secondary processes and choosing a combination giving a greatest value. Once again the temperature-discounted prices are shown to play an important rôle.

In the special case of only having access to reversible secondary processes we would have all $\xi_{kl} = 1$ and therefore no entropy production, which simplifies (7.117) slightly. In such a case the right-hand member of (7.120) will be independent of l, which has the important consequence that *all temperature-discounted output prices must be equal if the corresponding kind of energy is to be produced*, or in other words, only energy having the lowest temperature-discounted price can be delivered at the optimum. As a slight variation of the model treated, let us assume that all primary processes are linear and that the supplies of primary factors are limited. For each output unit of process k we need factors in the fixed volumes $h_{1k}, h_{2k}, \ldots, h_{Kk}$, and the total need of factors when running the primary processes with output levels $y_1, y_2, \ldots, y_N$ will then be:

$$x_j = \sum_{k=1}^{M} \sum_{l=1}^{N} h_{jk} y_{jk} \leq \hat{x}_j \tag{7.123}$$

where $\hat{x}_j$ is the given supply of factor j.

The production function constraint is different compared with the previous version of the model. Introducing the multiplier γ_j for each of the constraints in (7.123), the Lagrangean function will be:

$$L = \sum_{k=1}^{M} \sum_{l=1}^{N} p_l z_{kl} - \sum_{j=1}^{K} \sum_{k=1}^{M} \sum_{l=1}^{N} c_j h_{jk} y_{kl} +$$

$$+ \sum_{j=1}^{K} \gamma_j (\hat{x}_j - \sum_{k=1}^{M} \sum_{l=1}^{N} h_{jk} y_{kl}) +$$

$$+ \sum_{k=1}^{M} \sum_{l=1}^{N} \beta_{kl} (\xi_{kl} (1 - T^* T_k^{-1}) y_{kl} - (1 - T^* T_l^{-1}) z_{kl}) \qquad (7.124)$$

This model is thus entirely linear and from the Kuhn-Tucker conditions the following fundamental inequality is given:

$$\bar{p}_l \leq \beta_{kl} \leq \frac{\sum_{j=1}^{K} (c_j + \gamma_j) h_{jk}}{\xi_{kl} (1 - T^* T_k^{-1})} \qquad (7.125)$$

Similar to our previous findings we obtain that for secondary energy l to be produced, its temperature-discounted price obeys:

$$\bar{p}_l = \min_k \frac{\sum_{j=1}^{K} (c_j + \gamma_j) h_{jk}}{\xi_{kl} (1 - T^* T_k^{-1})} \qquad (7.126)$$

When all secondary processes are reversible, the right-hand member is independent of l requiring that only energy with highest temperature-discounted price be produced in the process having lowest temperature-discounted marginal cost (adjusted for shadow prices γ_j with respect to limited factor supplies).

7.6. Economic model of energy extraction from a system of ideal gases

In this section we shall sketch a model based on the system treated in chapter 5. The results below are preliminary and the inclusion of this section has the purpose of pointing out some theoretical difficulties that arise when the sources from which exergy is to be extracted are characterized by at least two properties, in this case temperature and volume (or pressure).

The approach in this section will be made along the same line as in section 7.4, where a thermal system was treated. There we attached a constant price p_i to the heat taken from or delivered to the ith source having temperature T_i. It was then shown that these prices had to be related to their corresponding final temperatures in order for a cost minimum to exist, assuming a given minimal output of work to be extracted. It was also shown that when the work output requirement was increased up to its maximal possible level the range of possible prices narrowed down to a single value applicable to all sources, a consequence in conflict with the possibility of a free environment.

Due to difficulties to be pointed out, initially we shall confine ourselves to an extremely specialized case of the system given in chapter 5, assuming constant prices. Adopting such simplifications, it is hoped that the structure of the problem will be made as clear as possible, enabling us to obtain certain explicit relationships, that however are of extremely limited generality.

In this initial model we assume constant given prices. It is then shown that the total costs incurred during the extraction process must depend on the path between the state departed from to the final state in such a way that a closed loop path can be chosen giving rise to a finite cost increase or decrease depending on the direction of the loop followed. This indicates that prices have to be related to current temperatures and volumes and not held constant, and the section will conclude with an approach following such a line.

Let us at first consider the following simplified system of two ideal gas sources, each characterized by its temperature T_1, T_2 and by its volume V_1, V_2, the sum of volumes being a constant unit volume $\hat{V}=1$. Assume also that the heat capacities at constant volume are unit-valued $c_1=c_2=1$ and that each source contains exactly one mole, $n_1=n_2=1$. Also we let the universal gas constant R assume the numerical value of unity, which only means that

the temperature scale applied has undergone a proportional transformation (cf table 2.1).

Under these assumptions, the problem stated in chapter 5 was to maximize:

$$W = -\int_{T_1^0}^{T_1^*} dT_1 - \int_{T_2^0}^{T_2^*} dT_2 = -\int_0^\infty (\dot{T}_1+\dot{T}_2)dt \tag{7.127}$$

subject to the entropy and volume constraints:

$$\frac{\dot{T}_1}{T_1} + \frac{\dot{T}_2}{T_2} + \frac{\dot{V}_1}{V_1} + \frac{\dot{V}_2}{V_2} \geq \dot{\hat{S}} \tag{7.128}$$

$$1-V_1-V_2 = 0 \tag{7.129}$$

The solution as regards final temperatures and volumes are then given by:

$$T_1 = T_2 = 2e^{\hat{S}}\sqrt{T_1^0T_2^0V_1^0V_2^0} \tag{7.130}$$

$$V_1=V_2=1/2 \tag{7.131}$$

The maximal work output is:

$$W_{max} = T_1^0 + T_2^0 - 4e^{\hat{S}}\sqrt{T_1^0T_2^0V_1^0V_2^0} \tag{7.132}$$

and the exergy potential:

$$E = T_1^0 + T_2^0 - 4\sqrt{T_1^0T_2^0V_1^0V_2^0} \tag{7.133}$$

It is also clear that if we would have had to keep the volumes constant, the maximal work output would have been $T_1^0+T_2^0-2e^{\hat{S}}\sqrt{T_1^0T_2^0}$ and the exergy potential $T_1^0+T_2^0-2\sqrt{T_1^0T_2^0}$, which both have lower values than those of (7.132)-(7.133), if the initial volumes differ from 1/2.

We now state the following economic problem. Heat from (to) source i has to be purchased (sold) at a *constant* price p_i (per heat unit) and a volume displacement of source i (used e g for moving a piston) purchased (sold) at a constant price r_i (per volume unit). The amount of work to be extracted has to reach a given minimal level $\hat{W}$. This extraction is to take place at lowest cost, subject to the entropy and volume constraints. We are therefore to minimize the total costs:

$$C = -p_i \int_0^\infty (\dot{T}_1 + T_1 \frac{\dot{V}_1}{V_1})dt - p_2 \int_0^\infty (\dot{T}_2 + T_2 \frac{\dot{V}_2}{V_2})dt + \\ + r_1 \int_0^\infty \dot{V}_1 dt + r_2 \int_0^\infty \dot{V}_2 dt \tag{7.134}$$

subject to the three constraints:

$$\frac{\dot{T}_1}{T_1} + \frac{\dot{T}_2}{T_2} + \frac{\dot{V}_1}{V_1} + \frac{\dot{V}_2}{V_2} \geq \dot{\hat{S}} \tag{7.135}$$

$$-\int_0^\infty (\dot{T}_1 + \dot{T}_2)dt - \hat{W} \geq 0 \tag{7.136}$$

$$1 - V_1 - V_2 = 0 \tag{7.137}$$

Of these constraints the first and third have to be satisfied throughout the process, whereas the second is a final value constraint.

The approach used previously for finding conditions for an optimal path is to form the Hamiltonian of the problem and derive the associated Eulerian conditions:

$$H = p_1(\dot{T}_1 + T_1 \frac{\dot{V}_1}{V_1}) + p_2(\dot{T}_2 + T_2 \frac{\dot{V}_2}{V_2}) + \\ + \alpha(\frac{\dot{T}_1}{T_1} + \frac{\dot{T}_2}{T_2} + \frac{\dot{V}_1}{V_1} + \frac{\dot{V}_2}{V_2} - \dot{\hat{S}}) - \beta(\dot{T}_1 + \dot{T}_2) - \gamma(\dot{V}_1 + \dot{V}_2) \tag{7.138}$$

$$\frac{\partial H}{\partial T_1} - \frac{d}{dt}\frac{\partial H}{\partial \dot{T}_1} = p_1 \frac{\dot{V}_1}{V_1} - \frac{\dot{\alpha}}{T_1} + \dot{\gamma} = 0 \tag{7.139}$$

$$\frac{\partial H}{\partial T_2} - \frac{d}{dt}\frac{\partial H}{\partial \dot{T}_2} = p_2 \frac{\dot{V}_2}{V_2} - \frac{\dot{\alpha}}{T_2} + \dot{\gamma} = 0 \tag{7.140}$$

$$\frac{\partial H}{\partial V_1} - \frac{d}{dt}\frac{\partial H}{\partial \dot{V}_1} = -p_1 \frac{\dot{T}_1}{T_1} - \frac{\dot{\alpha}}{V_1} + \dot{\gamma} = 0 \tag{7.141}$$

$$\frac{\partial H}{\partial V_2} - \frac{d}{dt}\frac{\partial H}{\partial \dot{V}_2} = -p_2 \frac{\dot{T}_2}{T_2} - \frac{\dot{\alpha}}{V_2} + \dot{\gamma} = 0 \tag{7.142}$$

where we have chosen H so as to maximize $-C$, and where α, β, γ are Lagrangean multipliers.

Combining (7.137) with (7.139)-(7.140) we obtain:

$$\dot{\gamma} = \dot{\alpha}\,\frac{\dfrac{V_1}{T_1 p_1} + \dfrac{V_2}{T_2 p_2}}{\dfrac{V_1}{p_1} + \dfrac{V_2}{p_2}} \tag{7.143}$$

$$\dot{V}_1 = -\dot{V}_2 = \dot{\alpha}\,\frac{V_1 V_2 (T_1^{-1} - T_2^{-1})}{p_2 V_1 + p_1 V_2} \tag{7.144}$$

Since W has to increase up to $\hat{W}$, we must have $dW>0$ for some portion of the path the process takes. This requires γ to be identically zero along this portion of the path and therefore $\dot{\gamma}=0$ and so $\dot{\alpha}=\dot{V}_1=\dot{V}_2=0$. Hence the volumes may not be adjusted when extracting work.

Also, from (7.141)-(7.142) we obtain:

$$\dot{T}_1 = \frac{V_1}{p_1}\,\dot{\beta} \tag{7.145}$$

$$\dot{T}_2 = \frac{V_2}{p_2}\,\dot{\beta} \tag{7.146}$$

when $\dot{\alpha}=0$, which means that both temperatures have to move in the same direction. Since $\dot{S}\geq 0$ in (7.135), $dW>0$ requires at least one

$\dot{T}_2>0$, which by (7.145)-(7.146) requires both $\dot{T}_2>0$ in contradiction with (7.135). Hence there is no path satisfying the Euler conditions that yields $dW>0$.

The very fact that the volumes should not be changed indicate a contradiction since we know proviously that if $\hat{W}$ is given a sufficiently high value, this level cannot be reached except when temperatures as well as volumes are adjusted.

When comparing the Euler conditions of this section (7.139)-(7.140) with those of the case treated in section 7.4 where sources were characterized by temperatures alone (7.62) we find the conditions regarding temperature adjustments to coincide when $\dot{V}_1=\dot{V}_2=0$. However, the presence of the possibility to adjust volumes in our present case gives us the second set of conditions (7.141)-(7.142) causing the lack of optimal trajectory.

Let us now take a geometrical look upon our problem. It is clear that our objective function C in (7.134) contains integrals over exact differentials except for two terms that we write:

$$C' = -\int_0^\infty (p_1T_1\frac{\dot{V}_1}{V_1} + p_2T_2\frac{\dot{V}_2}{V_2})dt \tag{7.147}$$

Hence, apart from the final state reached, the path leading to this state will only affect C from the terms in C'. Let us introduce the abbreviation:

$$A = T_1^0T_2^0V_1^0V_2^0e^{\hat{S}} \tag{7.148}$$

When the entropy constraint (7.135) is active, points in (T_1,T_2)-space lie on the hyperbola:

$$T_1T_2 = \frac{Ae^{\hat{S}}}{V_1(1-V_1)} \tag{7.149}$$

where we have eliminated V_2 by using (7.137). Different values of the volume V_1 will define different hyperbolas, the lowest curve being obtained when $V_1(1-V_1)$ takes on its maximum $1/4$ for

$V_1=1/2$. When $\hat{S}$ increases the curve moves outwards and when V_1 is made closer to $1/2$ the curve moves closer to the T_1, T_2 axes (inwards).

Constant values of total work output correspond to straight lines at $\pi/4$ angles with the axes:

$$W = T_1^0+T_2^0-T_1-T_2 = const \tag{7.150}$$

a higher value of W corresponding to a lower line, the lowest possible one given by (7.132):

$$T_1+T_2 = 4e^{\hat{S}_A} \tag{7.151}$$

In figure 7.5 is shown the state space of the process under consideration. The process starts out from the point (T_1^0, T_2^0) at which the work line $W=0$ indicated by A intersects the initial hyberbola. The aim is to reach a permissible point on the line $W=\hat{W}$ indicated by B. The hyperbola C corresponds to a value of $V_1=1/2$ and final entropy $\hat{S}$. The process must therefore end up somewhere on the segment of B inbetween its two intersections with C.

A trajectory for which the entropy constraint is ineffective can never give a minimum to C' in (7.147) since such a trajectory can always be improved by choosing a higher T_1, if $\dot{V}_1>0$ etc. Let us therefore study trajectories that satisfy the entropy constraint exactly. Let us also confine ourselves to the reversible case that $d\hat{S}=0$ throughout. In such a case the hyperbola D in figure 7.5 would lie above the hyperbola C, and the possible change from D to C would correspond to an adjustment in V_1 (and $V_2 = 1-V_1$) alone.

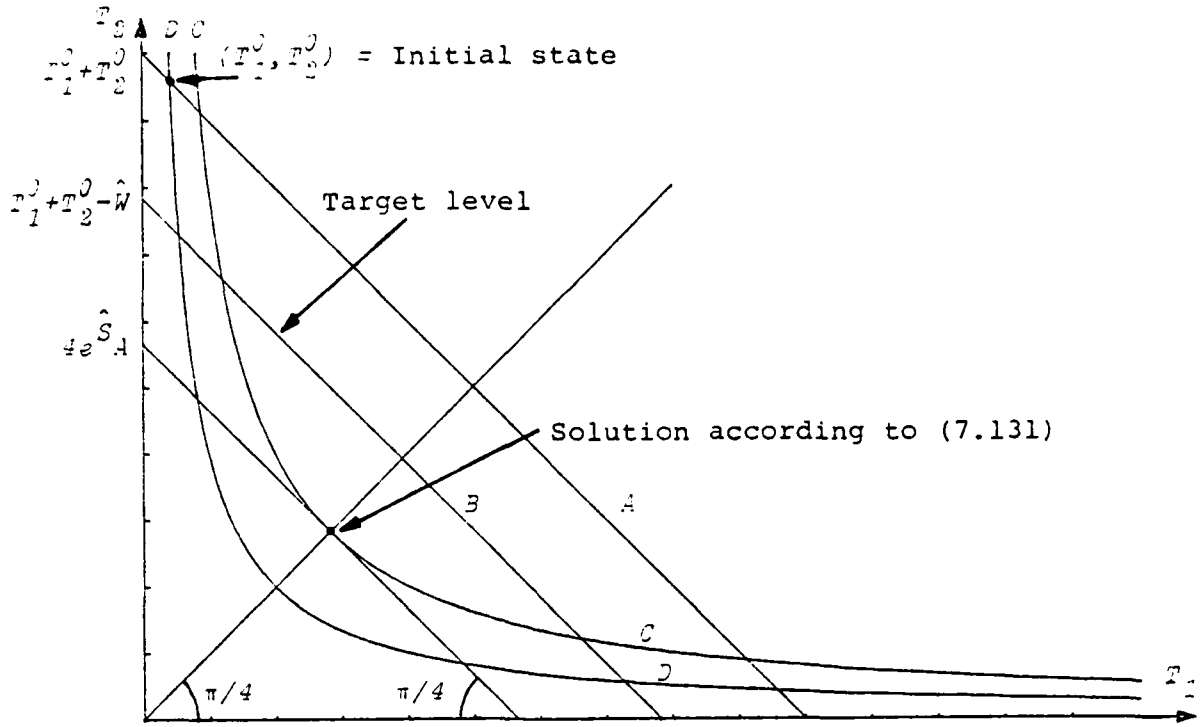

Figure 7.5. State space of two-source process

Differentiating (7.149) gives us:

$$dV_1 = \frac{A}{2T_1T_2} \frac{\frac{dT_1}{T_1} + \frac{dT_2}{T_2}}{\sqrt{\frac{1}{4} - \frac{A}{T_1T_2}}} \tag{7.152}$$

and since $dV_2 = -dV_1$, the line integral of (7.147) may be written:

$$C' = -\frac{1}{2}\int X\left(\frac{dT_1}{T_1} + \frac{dT_2}{T_2}\right) \tag{7.153}$$

where:

$$X = \frac{1}{2}\frac{p_1T_1 - p_2T_2}{\sqrt{\frac{1}{4} - \frac{A}{T_1T_2}}} - p_1T_1 - p_2T_2 \tag{7.154}$$

This integral may be evaluated along a closed loop beginning and

ending in the initial state and passing the final state. Using Green's theorem we obtain:

$$C_I' - C_{II}' = -\frac{1}{2}\iint\left(\frac{1}{T_2}\frac{\partial X}{\partial T_1} - \frac{1}{T_1}\frac{\partial X}{\partial T_2}\right)dT_1 dT_2 \qquad (7.155)$$

where the surface integration takes place over the area defined by the loop and where C_I' and C_{II}' are integrals along the two paths connecting the initial and final states.

Evaluting the integrand in (7.155) and assuming $p_2>0$ gives us:

$$\frac{1}{T_2}\frac{\partial X}{\partial T_1} - \frac{1}{T_1}\frac{\partial X}{\partial T_2} = \frac{p_2}{T_1} - \frac{p_1}{T_2} + \frac{1}{2}\frac{\frac{p_1}{T_2} + \frac{p_2}{T_1}}{\sqrt{\frac{1}{4} - \frac{A}{T_1 T_2}}} > p_2 > 0 \qquad (7.156)$$

Hence, for a positively oriented loop the integral in (7.155) must be negative, and more negative the larger the area that is defined by the loop, whereas if $p_2<0$ the integral would be positive. If the direction of the path followed is reversed the sign obtained would be the opposite. This means that if a closed loop is followed a number of cycles, the line integral can be made arbitrarily positive or negative.

This result has been obtained in a very special case, but it appears quite clear that a perfectly similar result would be obtained in any more general case.

As we have pointed out above, the results obtained indicate that prices have to depend on current values of the properties, if economically meaningful results are to be derived. Let us therefore take an approach that is shown to make the path of integration from initial to final state immaterial.

Consider a system of $(N+1)$ sources of ideal gases as given in chapter 5. Each source is characterized by its temperature and volume (or pressure) $T_i, V_i, i=0,1,\ldots,N$. The heat capacities at constant volume are functions of temperature alone $c_0(T_0), c_1(T_1), \ldots, c_N(T_N)$. The number of moles of each source are

given constants $n_0, n_1, \ldots, n_N$. Work may be extracted either by heat engines, or by piston-cylinder devices, or both.

From our foregoing results we have found that the differential costs should be an exact differential in order for the path of integration to be immaterial in our optimization. Let us therefore assume that the price of heat is a function of the *current* temperature of the heat source:

$$p_i = p_i(T_i), \quad i = 0,1,2,\ldots,N \tag{7.157}$$

and that the price of a volume displacement purchased is a function of volume V_i and temperature T_i:

$$r_i = r_i(T_i, V_i), \quad i = 0,1,2,\ldots,N \tag{7.158}$$

Our problem is to minimize total costs:

$$C = -\sum_{i=0}^{N} \int_0^{\infty} (p_i(T_i)(c_i(T_i)\dot{T}_i + Rn_i T_i V_i^{-1}\dot{V}_i) - r_i(T_i, V_i)\dot{V}_i)dt \tag{7.159}$$

subject to the entropy constraint:

$$\left(\sum_{i=0}^{N} (c_i(T_i)\dot{T}_i\, T_i^{-1} + Rn_i\dot{V}_i V_i^{-1}) - \dot{\hat{S}}\right)dt \geq 0 \tag{7.160}$$

to the work output constraint:

$$-\sum_{i=0}^{N} \int_0^{\infty} c_i(T_i)\dot{T}_i - \hat{W} \geq 0 \tag{7.161}$$

and to the volume constraint:

$$\hat{V} - \sum_{i=0}^{N} V_i = 0 \tag{7.162}$$

where $\dot{\hat{S}}$ is the given rate of entropy production and $\hat{W}$ the given amount of work to be extracted.

In order for the cost differential to be exact, we need to have (cf (2.3)):

$$\frac{\partial}{\partial V_i}(p_i(T_i)c_i(T_i)) = \frac{\partial}{\partial T_i}(p_i(T_i)Rn_iT_iV_i^{-1} - r_i(T_i,V_i)) \quad (7.163)$$

or, since the left-hand member is zero:

$$\frac{\partial}{\partial T_i}(p_i(T_i)T_i - r_i(T_i,V_i)Rn_iV_i^{-1}) = 0 \quad (7.164)$$

This partial differential equation has the solution:

$$p_i(T_i)T_i - r_i(T_i,V_i)(Rn_i)^{-1}V_i = f_i(V_i) \quad (7.165)$$

where f_i is an arbitrary function of V_i alone. This relationship we require to hold throughout the process.

The Hamiltonian of the problem to maximize $-C$ may be written:

$$H = \sum_{i=0}^{N} p_i(T_i)(c_i\dot{T}_i + Rn_iT_iV_i^{-1}\dot{V}_i) - r_i(T_i,V_i)\dot{V}_i +$$
$$+ \alpha(c_iT_i^{-1}\dot{T}_i + Rn_iV_i^{-1}\dot{V}_i - \dot{S}(N+1)^{-1}) - \beta c_i\dot{T}_i + \gamma\dot{V}_i \quad (7.166)$$

where α and β are non-negative multipliers and γ a multiplier, the sign of which as yet is undetermined. The Eulerian conditions now become:

$$\frac{\partial H}{\partial T_i} - \frac{d}{dt}\frac{\partial H}{\partial \dot{T}_i} = (-\dot{\alpha}T_i^{-1}+\beta)c_i = 0, \quad i=0,1,\ldots,N \quad (7.167)$$

$$\frac{\partial H}{\partial V_i} - \frac{d}{dt}\frac{\partial H}{\partial \dot{V}_i} = -\dot{\alpha}Rn_iV_i^{-1} + \dot{\gamma} = 0, \quad i=0,1,\ldots,N \quad (7.168)$$

where (7.163) has been used.

During the process of extraction we must have $dW>0$ giving $\beta=0$ and therefore $\dot{\beta}=0$. Since $c_i, T_i, n_i \neq 0$, we therefore conclude that during

the process we have:

$$\dot{\alpha} = \dot{\beta} = \dot{\gamma} = 0 \tag{7.169}$$

Therefore the multipliers may be brought outside of the integrals when forming the Lagrangean:

$$L = \sum_{i=0}^{N} \int_0^\infty (p_i(T_i)(c_i\dot{T}_i + Rn_iT_iV_i^{-1}\dot{V}_i) - r_i(T_i,V_i)\dot{V}_i)dt +$$

$$+ \alpha \int_0^\infty (\sum_{i=0}^{N} (c_iT_i^{-1}\dot{T}_i + Rn_iV_i^{-1}\dot{V}_i) - \dot{\hat{S}})dt -$$

$$- \beta(\int_0^\infty \sum_{i=0}^{N} c_i\dot{T}_i dt + \hat{W}) + \gamma(\hat{V} - \sum_{i=0}^{N} V_i) \tag{7.170}$$

in which all differentials are exact. Therefore the necessary Kuhn-Tucker conditions for the final state become:

$$\frac{\partial L}{\partial T_i} = (p_i(T_i) + \alpha T_i^{-1} - \beta)c_i = 0 \tag{7.171}$$

$$\frac{\partial L}{\partial V_i} = (f_i(V_i) + \alpha)Rn_iV_i^{-1} - \gamma = \beta a_i - \gamma - r_i(T_i,V_i) = 0 \tag{7.172}$$

$$\frac{\partial L}{\partial \alpha} = \sum_{i=0}^{N} (G_i(T_i)-G_i(T_i^0) + Rn_i\log V_iV_i^0) - \hat{S} \geq 0 \tag{7.173}$$

$$\frac{\partial L}{\partial \beta} = \sum_{i=0}^{N} (V_i(T_i^0)-V_i(T_i)) - \hat{W} \geq 0 \tag{7.174}$$

$$\frac{\partial L}{\partial \gamma} = \hat{V} - \sum_{i=0}^{N} V_i = 0 \tag{7.175}$$

$$\alpha, \beta \geq 0 \tag{7.176}$$

where (7.165) and the universal gas law has been used in (7.172), where a_i is pressure, and where $\alpha>0$ or $\beta>0$ yield equalities in (7.173) and (7.174) respectively. The functions U_i and C_i as before, are primitive functions of c_i and $c_iT_i^{-1}$ respectively.

From (7.171) we find the usual result:

$$p_i(T_i) = \beta(1 - \frac{\alpha}{\beta} T_i^{-1}) \tag{7.177}$$

Hence, if $T_i \to \infty$ we may interpret β as the price of work p and $\alpha\beta^{-1}$ an environment temperature T^*:

$$p_i(T_i) = p(1 - T^* T_i^{-1}) \tag{7.178}$$

which means that all temperature-discounted prices should be equal. Also we obtaing from (7.172) the dependence:

$$r_i(T_i, V_i) = p(a_i - \gamma p^{-1}) \tag{7.179}$$

which shows that γp^{-1} can be interpreted as an "environmental pressure" a^*:

$$r_i(a_i) = p(a_i - a^*) \tag{7.180}$$

In an analogous way we therefore call $r_i(a_i - a^*)^{-1}$ the *pressure-discounted price*. Eq (7.180) thus requires that *all pressure-discounted prices are equal* when trading volume displacements (such as compressed air in tubes).

Following the usual procedure of assuming differential adjustments of the given parameters we find the anticipated results:

$$\frac{\partial C}{\partial \hat{S}} = \alpha = pT^* \tag{7.181}$$

$$\frac{\partial C}{\partial \hat{W}} = \beta = p \tag{7.182}$$

$$C = p\hat{W} + pT^*\hat{S} \tag{7.183}$$

i e that the total costs are made up of the work obtained $\hat{W}$ and the lost work $T^*\hat{S}$ priced at the exergy price p. The implications of further adjustments of different parameters such as initial

temperatures or initial volumes are straight forward to derive, but are omitted here.

We now introduce an asymmetry by letting source 0 become an infinite environment with temperature T_0^0 and a finite pressure a_0^0 by having $n_0 \to \infty$. From (7.175) we obtain:

$$n_0(v_0 - v_0^0) = \sum_{i=1}^{N} n_i(v_i - v_i^0) \tag{7.184}$$

where the v_i denote specific volumes. Also we have:

$$G_0(T_0) - G_0(T_0^0) \approx n_0 \hat{c} \frac{T_0 - T_0^0}{T_0^0} \tag{7.185}$$

where $\hat{c}$ is a constant for values of T_0 close to T_0^0, and similarly

$$U_0(T_0^0) - U_0(T_0) \approx \hat{c} n_0 (T_0^0 - T_0) \tag{7.186}$$

Inserting these expressions into (7.173)-(7.175) and taking the limit $n_0 \to \infty$, we thus obtain:

$$\hat{W} = \sum_{i=1}^{N} (U_i(T_i^0) - U_i(T_i) + T_0^0(G_i(T_i^0) - G_i(T_i) - \\ - Rn_i(\log v_i/v_i^0 + \frac{v_i - v_i^0}{v_0^0})) - T_0^0 \hat{S} \tag{7.187}$$

For an infinite environment, differentials of volumes dV_0 and heat dQ_0 of temperature T_0^0 would be free entities. This gives us:

$$p_i = p(1 - T_0^0 T_i^{-1}) \tag{7.188}$$

and:

$$r_i = pR(\frac{T_i}{v_i} - \frac{T_0^0}{v_0}) = p(a_i - a_0^0) \tag{7.189}$$

from (7.178) and (7.180) where T^* has been forced to take on the value T_0^0 and a^* to take on the value $RT_0^0 v_0^{-1} = a_0^0$, i e the pressure of the ambient.

In this section we have nowhere assumed the existence of an environment with constant intensive properties until from (7.188) and onwards. Also we have nowhere presumed the use of the exergy concept. The results derived have been based on the second law directly. However, looking back at (7.178) and (7.180) we easily see that a small amount of heat δQ_i purchased from source i would cost:

$$\delta C_i' = p(1-T^*T_i^{-1})\delta Q_i = p\delta E_i' \tag{7.190}$$

and that a volume displacement δV_i similarly would cost:

$$\delta C_i'' = p(a_i - a^*)\ \delta V_i = p\delta E_i'' \tag{7.191}$$

where $\delta E_i'$ and $\delta E_i''$ are the corresponding exergy differentials. Hence, once again we find that our results may be interpreted in terms of exergy directly.

It is clear that the analysis in this section and in section 7.4 could be strengthened and developed further, but this is left for future research.

CHAPTER 8. ECONOMIC MODELS OF ENERGY UTILIZATION

8.1 Introduction

Although energy is indestructable and therefore cannot be consumed, it is indeed used for providing services to households, consumers and industries and thereby, from a second law standpoint, it is degraded. Exergy, on the other hand, which incorporates quantity as well as quality is indeed consumed in processes during which energy uses up its potential for carrying out useful tasks.

In this chapter we present a few different models for energy utilization, or exergy consumption, describing energy transformation processes as seen from the point of view of the user, interpreted as a household (consumer). It will be shown that the temperature-discounted prices derived in section 7.2 will continue to play an important rôle for determining the optimal choice of energy utilization plan.

Throughout this chapter we assume the existence of a given infinite environment having a given constant temperature T^*. The models introduced do therefore not obey the symmetry principle given in section 1.3.

8.2 Economic model of direct energy deliveries

As a first very simple model, we consider a household requiring energy supplies for various purposes, such as for space heating, for cooling, or for electrical equipment. The volumes of services using energy that are demanded per time unit (or during some time interval), will be denoted by $q_1, q_2, \ldots, q_N$. We shall characterize energy by one quality only, viz temperature. The service represented by q_i requires energy amounting to $z_i(q_i)$ having a temperature T_i of at least $\hat{T}_i$, which is a given parameter for each i. The $z_i(q_i)$ are assumed to be mo-

notonically increasing functions of q_i. Also we assume $z_i(0)=0$. In this first model, the household does not have access to any energy transforming equipment apart from natural entropy production, such as heating a space by means of a flame having temperature high above room temperature etc. We shall therefore not take into consideration cases such as cooking at a higher temperature that can be carried out in a shorter period of time and providing a similar result as cooking at a lower temperature during a longer interval.

The household is assumed to evaluate its consumption of services according to a utility function $u(q_1, q_2, \ldots, q_N)$ having usual first- and second-order properties (positive marginal utilities, concave utility function):

$$\frac{\partial u}{\partial q_i} > 0, \qquad i=1, 2, \ldots, N \tag{8.1}$$

$$d^2u = \sum_{i=1}^{N} \sum_{j=1}^{N} \frac{\partial^2 u}{\partial q_i \partial q_j} dq_i dq_j \tag{8.2}$$

where the inequality in (8.2) is valid for any displacement $(dq_1, dq_2, \ldots, dq_N)$ that is not identically zero-valued.

Energy of temperature T_i is purchased at a positive unit price of $p(T_i)$ which is assumed to be a monotonically increasing function of temperature, but constant with respect to purchased amount of energy. For purchasing energy the consumer is provided with a given budget $\hat{C}$.

The problem to be treated is to choose values of all q_i that maximize utility:

$$u=u(q_1, q_2, \ldots, q_N) \tag{8.3}$$

subject to the constraints:

$$\hat{C} \geq \sum_{i=1}^{N} p(T_i) z_i(q_i) \tag{8.4}$$

$$T_i \geq \hat{T}_i \ , \quad i=1,2,\ldots,N \tag{8.5}$$

We introduce the non-negative multiplier λ for the budget requirement and ν_i for the ith temperature requirement, and form the Lagrangean:

$$L = u + \lambda(\hat{C} - \sum_{i=1}^{N} p(T_i) z_i(q_i)) + \sum_{i=1}^{N} \nu_i (T_i - \hat{T}_i) \tag{8.6}$$

The necessary Kuhn-Tucker conditions will then be:

$$\frac{\partial L}{\partial q_i} = \frac{\partial u}{\partial q_i} - \lambda p(T_i) \frac{dz_i}{dq_i} \leq 0, \quad i=1,2,\ldots,N \tag{8.7}$$

$$\frac{\partial L}{\partial T_i} = - \lambda \frac{dp(T_i)}{dT_i} + \nu_i = 0, \quad i=1,2,\ldots,N \tag{8.8}$$

$$\frac{\partial L}{\partial \lambda} = \hat{C} - \sum_{i=1}^{N} p(T_i) z_i(q_i) \geq 0 \tag{8.9}$$

$$\frac{\partial L}{\partial \nu_i} = T_i - \hat{T}_i \geq 0, \quad i=1,2,\ldots,N \tag{8.10}$$

$$q_i, \lambda, \nu_i \geq 0, \qquad i=1,2,\ldots,N \tag{8.11}$$

where strict inequalities in (8.7),(8.9) or (8.10) imply zero-valued corresponding variables and where therefore positive values of q_i, λ or ν_i imply corresponding equalities in (8.7), (8.9) or (8.10) respectively.

Since $p(T_i)$, $\frac{dz_i}{dq_i}$ and $\frac{\partial u}{\partial q_i}$ are positive, (8.7) requires $\lambda > 0$,

and this consequence combined with $\frac{dp(T_i)}{dT_i} > 0$ in (8.8) implies $p_i > 0$ for all i. Therefore (8.9) and (8.10) will be equalities and the temperatures chosen will be lowest possible, quite as expected. Since $T_i = \hat{T}_i$, we replace the notation $p(\hat{T}_i)$ by the simpler notation p_i etc. The result $\lambda > 0$ implies that the full budget is spent, which is quite natural considering $\frac{\partial u}{\partial q_i} > 0$ for all q_i.

The solution to our problem is therefore a solution to:

$$\begin{cases} \left(\frac{\partial u}{\partial q_i} - \lambda p_i \frac{dz_i}{dq_i}\right) q_i = 0 \\ \hat{C} - \sum_{i=1}^{N} p_i z_i(q_i) = 0 \end{cases} \tag{8.12}$$

that satisfies (8.7). This is a system of $(N+1)$ equations with the $(N+1)$ unknowns $q_1, q_2, \ldots, q_N, \lambda$.

Let us briefly take a look at effects of changes in given parameter values. If we have $\frac{\partial u}{\partial q_i} - \lambda p_i \frac{dz_i}{dq_i} < 0$ for some i in the solution, q_i and therefore z_i will be zero-valued. A small parameter change in $\hat{C}$ or p_i by $\delta\hat{C}$ and δp_i will therefore have no effect on q_i. We can therefore consider the system:

$$\begin{cases} \frac{\partial u}{\partial q_i} - \lambda p_i = 0 \qquad (q_i > 0) \\ \hat{C} - \sum_i{}' \; p_i z_i(q_i) = 0 \end{cases} \tag{8.13}$$

which contains only positive variables $q_i > 0$, Σ' denoting the summation over such index values.

Taking the total differential of this system of equations and renumbering the variables p_i, q_i, z_i etc from 1 to M for positive values of q_i and using the variables z_i instead of q_i, we may write:

$$\begin{vmatrix} u_{11} & u_{12} & \cdots & u_{1N} & u_1 \\ u_{21} & u_{22} & \cdots & u_{2N} & u_2 \\ \vdots & & & \vdots & \\ u_{N1} & u_{N2} & \cdots & u_{NN} & u_N \\ u_1 & u_2 & \cdots & u_N & 0 \end{vmatrix} \begin{vmatrix} \delta z_1 \\ \delta z_2 \\ \vdots \\ \delta z_N \\ -\delta\lambda/\lambda \end{vmatrix} = \begin{vmatrix} \delta p_1 \\ \delta p_2 \\ \vdots \\ \delta p_N \\ \delta\hat{C} - \hat{C}^{-1} z_j \delta p_j \end{vmatrix} \tag{8.14}$$

in which δp_i and $\delta\hat{C}$ are considered as independent and δz_i and $\delta\lambda$ as dependent differentials, and where the abbreviations

$u_i = \frac{\partial u}{\partial z_i} = \frac{\partial u}{\partial q_i} \cdot \frac{dq_i}{dz_i}$, $u_{ij} = \frac{\partial^2 u}{\partial z_i \partial z_j} = \frac{\partial^2 u}{\partial q_i \partial q_j} \cdot \frac{dq_i}{dz_i} \cdot \frac{dq_j}{dz_j}$ are used.

The bottom row equation in (8.14) gives us the usual economic interpretation of the multiplier λ:

$$\lambda = \frac{\partial u}{\partial \hat{C}} \tag{8.15}$$

If the determinant of the coefficient matrix in the left-hand member of (8.14) is non-zero, the equation can be inverted, giving us the differentials $\delta z_1, \delta z_2, \ldots, \delta z_N, \delta\lambda$ as functions of δp_i and $\delta\hat{C}$. The resulting equation may be interpreted in terms of the *Slutsky equation* [cf e g Horowitz, 1970, p 33]:

$$\frac{\partial z_i}{\partial p_j} = \left(\frac{\partial z_i}{\partial p_j}\right)_{u=const} - \frac{\partial z_i}{\partial \hat{C}} z_j \tag{8.16}$$

where the term $\left(\frac{\partial z_i}{\partial p_j}\right)_{u=const}$ refers to the *substitution effect* assuming a change in p_j and a simultaneous change in $\hat{C}$ enabling u to remain constant. Other results may be derived and will be identical with those included in standard micro-economic litterature.

The system of equations (8.12) together with the inequality (8.17) determines the implicit demand relationships, i e the dependence of demanded energy volumes z_i as functions of all prices p_i and the budget level $\hat{C}$.

8.3. Economic model of household with access to energy transformation equipment.

In the model to be presented in this section we introduce the opportunity for the household to transform purchased energy of one kind i (temperature T_i), $i=1,2,\ldots,N$, into energy of a second kind j (temperature T_j), $j=1,2,\ldots,N$. The equipment for such a conversion produces an entropy $\hat{S}_{ij}$ which is assumed to be proportional to the volume of energy input. Also we allow for the opportunity for the equipment to interact with the environment (temperature T^*) making it possible to obtain energy outputs at higher temperatures than that of the input energy in a similar way as described in section 7.5 (cf figure 7.3). Figure 8.1 illustrates the flows associated with such a transformation.

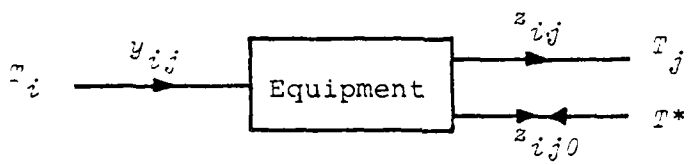

Figure 8.1. Energy flows associated with transformation equipment

According to figure 8.1 the energy input is y_{ij} and is transformed into the energy output z_{ij}. The flow from the equipment to the environment z_{ij0} may be positive (heat engine example) or negative (heat pump example). The second-order efficiency is assumed constant and is given by:

$$\xi_{ij} = \frac{(1-T^*T_j^{-1})z_{ij}}{(1-T^*T_i^{-1})y_{ij}} \tag{8.17}$$

and is related to the entropy production rate $\hat{S}_{ij}$ by (cf (7.101)):

$$\hat{S}_{ij} = (1-\xi_{ij})(T^{*-1}-T_i^{-1})y_{ij} \tag{8.18}$$

If any of y_{ij}, z_{ij}, z_{ijj} or $\hat{z}_{ij}$ are known, so are the other three. The efficiencies ξ_{ij} obey $0 \leq \xi_{ij} \leq 1$ for all i and j.

The output energy of kind j is used for producing services needing the temperature T_j. The volumes of such services produced q_j, as before, are assumed to be a monotonically increasing functions of z_j, which we write in the inverse form $z_j(q_j)$, where $z_j(0)=0$, z_j being the energy requirement for the service volume q_j. The total energy of kind i purchased is written y_i, and the total energy of kind j produced is written z_j. Figure 8.2 illustrates the overall system.

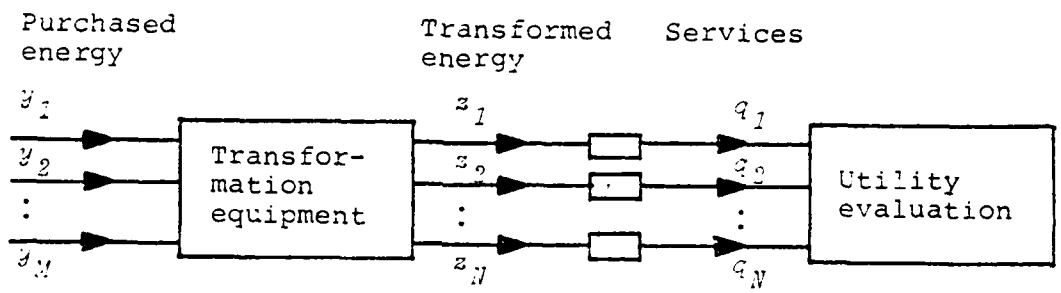

Figure 8.2. Illustration of flows in household having access to transformation equipment

As in the model of section 8.2 the energy used for producing the services cannot be used again for any additional purpose. Such possibilities will be treated in section 8.4 below. For simplicity we assume that the temperature necessary for providing service of type j is fixed at T_j in contrast to our former model in which we initially had the opportunity to use any temperature T_j above a given $\hat{T}_j$.

The costs associated with this model are of two kinds. On the hand we have the cost of purchasing energy of kind i, which is represented by the given parameter p_i, and secondly, we have the cost of transforming y_{ij} into z_{ij}, which we represent by a unit

operating and equipment cost r_{ij} per unit of energy input. The total costs may not exceed a given budget limit $\hat{C}$:

$$\sum_{i=1}^{M} p_i y_i + \sum_{i=1}^{M} \sum_{j=1}^{N} r_{ij} z_{ij} \leq \hat{C} \tag{8.19}$$

The preferences of the household for different services is described by a concave utility function $u(q_1, q_2, \ldots, q_N)$ having positive marginal utilities $\frac{\partial u}{\partial q_i} > 0$, $i=1,2,\ldots,N$.

The problem we analyze is the following. Given all p_i, r_{ij}, ξ_{ij} and $\hat{C}$, the utility function is to be maximized by a suitable choice of y_{ij}, z_{ij} (giving y_i, z_j and q_j) subject to (8.19) and to the constraints:

$$\xi_{ij}(1-T^*T_i^{-1})y_{ij} - (1-T^*T_j^{-1})z_{ij} \geq 0 \tag{8.20}$$

$$\sum_{i=1}^{M} z_{ij} - z_j(q_j) \geq 0 \tag{8.21}$$

Introducing the non-negative Lagrangean multipliers λ for (8.19), β_{ij} for (8.20) and ν_j for (8.21), we form the Lagrangean:

$$\begin{aligned} L = u &+ \lambda(\hat{C} - \sum_{i=1}^{M} \sum_{j=1}^{N} (p_i + r_{ij}) y_{ij}) + \\ &+ \sum_{i=1}^{M} \sum_{j=1}^{N} \beta_{ij}(\xi_{ij}(1-T^*T_i^{-1})y_{ij} - (1-T^*T_j^{-1})z_{ij}) + \\ &+ \sum_{j=1}^{N} \nu_j(\sum_{i=1}^{M} z_{ij} - z_j(q_j)) \end{aligned} \tag{8.22}$$

The necessary Kuhn-Tucker conditions are as follows:

$$\frac{\partial L}{\partial q_j} = \frac{\partial u}{\partial q_j} - \nu_j \frac{dz_j}{dq_j} \leq 0 \tag{8.23}$$

$$\frac{\partial L}{\partial y_{ij}} = -\lambda(p_i + r_{ij}) + \beta_{ij}\xi_{ij}(1-T^*T_i^{-1}) \leq 0 \tag{8.24}$$

$$\frac{\partial L}{\partial z_{ij}} = -z_{ij}(1-T^*T_j^{-1}) + \nu_j \geq 0 \tag{8.25}$$

$$\frac{\partial L}{\partial \lambda} = \hat{C} - \sum_{i=1}^{M} \sum_{j=1}^{N} (p_i+r_{ij})y_{ij} \geq 0 \tag{8.26}$$

$$\frac{\partial L}{\partial \beta_{ij}} = \xi_{ij}(1-T^*T_i^{-1})y_{ij} - (1-T^*T_i^{-1})z_{ij} \geq 0 \tag{8.27}$$

$$\frac{\partial L}{\partial \nu_j} = \sum_{i=1}^{M} z_{ij} - z_j(q_j) \geq 0 \tag{8.28}$$

$$q_j, y_{ij}, z_{ij}, \lambda, \beta_{ij}, \nu_j \geq 0 \tag{8.29}$$

where positive values of the respective variables require equalities in (8.23)-(8.28) and strict inequalities that the corresponding variables are zero-valued.

From (8.23) we immediately find $\nu_j>0$ for all j making (8.28) equalities. Hence by (8.25), all β_{ij} are positive making (8.27) into equalities also. The inequality (8.24) then requires $\lambda>0$, which implies an equality in (8.26) meaning that the budget available is spent in its entirety. This gives us an opportunity to eliminate many of the variables, if we so wish.

Writing $u_j = \frac{\partial u}{\partial z_j} = \frac{\partial u}{\partial q_j}\frac{dq_j}{dz_j}$ and combining (8.23)-(8.25) we obtain the fundamental inequality:

$$\bar{u}_j = \frac{u_j}{1-T^*T_j^{-1}} \leq \beta_{ij} \leq \lambda\frac{p_i+r_{ij}}{\xi_{ij}(1-T^*T_i^{-1})} = \lambda\xi_{ij}^{-1}(\bar{p}_i+\bar{r}_{ij}) \tag{8.30}$$

which is similar in nature to (7.117) and where $\bar{p}_i$ is the temperature-discounted price of energy type i, $\bar{r}_{ij}$ the discounted operating and equipment expense with respect to input temperature T_i and $\bar{u}_j$ the "temperature-discounted marginal utility" for service j.

Since $\hat{C}>0$, from (8.26) we obtain that there must be at least one $y_{ij}>0$, say $y_{kl}>0$, which implies by (8.27) and (8.28) that $z_{kl}>0$ and therefore $q_l>0$. Hence:

$$\bar{u}_l = \beta_{kl} = \lambda \xi_{kl}^{-1}(\bar{p}_k + \bar{r}_{kl}) \tag{8.31}$$

From the inequality (8.30) we find:

$$\bar{u}_l = \beta_{kl} = \underset{i}{Min}\ \beta_{il} \leq \lambda \underset{i}{Min}\ \xi_{il}^{-1}(\bar{p}_i + \bar{r}_{il}) \leq \lambda \xi_{kl}^{-1}(\bar{p}_k + \bar{r}_{kl}) \tag{8.32}$$

Therefore we must have:

$$\xi_{kl}^{-1}(\bar{p}_k + \bar{r}_{kl}) = \underset{i}{Min}\ \xi_{il}^{-1}(\bar{p}_i + \bar{r}_{il}) = \hat{p}_l \tag{8.33}$$

where we have used the short-hand notation $\hat{p}_l$ since the middle member is a function of l alone. For any positive energy output $z_l > 0$, the choice of optimal transformation equipment (k,l) providing this energy will thus be guided by (8.33), which implies that we should compare the temperature-discounted prices including operating expenses inflated for the efficiency factor ξ_{il} and then choose an equipment for which this discounted and inflated price is the lowest. In practical cases the relation between l and the minimizing value of i (ie k) would presumably be unique, meaning that there would be only one optimal kind of equipment for each energy use.

In the special case that all such values of l gave the same discounted operating expense $\bar{r}_{kl}$ (e g if this term were negligable) and the same efficiency (e g only reversible processes) then $\hat{p}_l$ would be independent of l, i e $\hat{p}_l = \hat{p}$, for all l, which implies that one type of input energy alone would suffice for providing all energy the household needs.

In the case that for each l the minimization in (8.33) is obtained for a unique $i = k(l)$, we must have:

$$y_{il} = z_{il} = 0, \quad i \neq k(l) \tag{8.34}$$

and therefore:

$$\begin{cases} y_{k(l)} = y_{kl} \\ z_l = z_{kl} = z_l(q_l) \end{cases} \tag{8.35}$$

Our problem would then be reduced to that of maximizing:

$$u = u(z_1, z_2, \ldots, z_N) \tag{8.36}$$

subject to the single constraint:

$$\sum_{l=1}^{N} \bar{p}_{kl}\xi_{k(l)l}^{-1} z_l(1-T^*T_l^{-1}) \leq \hat{C} \tag{8.37}$$

which is structure is identical with our model in the previous section if $\bar{p}_{k(l)}\xi_{k(l)l}^{-1}(1-T^*T_l^{-1})$ is interpreted as the price of energy of kind l.

Let us for the sake of analysis assume that the minimization in (8.33) does not give a unique solution for a given l. We would then have:

$$\frac{p_k+r_{kl}}{\xi_{kl}(1-T^*T_k^{-1})} = \frac{p_m+r_{ml}}{\xi_{ml}(1-T^*T_m^{-1})} \tag{8.38}$$

for some $m \neq k$, enabling us to choose arbitrarily between equipment (k,l) and (m,l) for providing energy of kind l. If the unadjusted prices are different, say:

$$p_m+r_{ml} > p_k+r_{kl} \tag{8.39}$$

we must have:

$$\xi_{ml}(1-T^*T_m^{-1}) > \xi_{kl}(1-T^*T_k^{-1}) \tag{8.40}$$

showing that a higher energy price may be compensated for either by a higher efficiency $\xi_{ml} > \xi_{kl}$ or a higher temperature $T_m > T_k$, or both. Thus there is a clear trade-off between efficiency, tempe-

rature and cost. Similarly, if the unadjusted unit prices are equal we obtain:

$$T^*T_k^{-1} - T^*T_m^{-1} = \xi_{mt} - \xi_{kt} \tag{8.41}$$

showing the higher temperature to be associated with a lower efficiency and vice versa.

If we wish to study consequences from changing our given parameter values, in the case of a unique solution to (8.33) the problem (8.36)-(8.37) will have the same structure as (8.3)-(8.4). Therefore the procedure described in (8.14) and subsequently will be valid when δp_t is exchanged for $\delta(\bar{p}_{k(l)t}\xi_{k(l)t}^{-1}(1-T^*T_l^{-1}))$. Writing δp_t^* for this differential, we derive the following sign relationships:

$$\frac{\partial p_t^*}{\partial p_{k(l)}}, \frac{\partial p_t^*}{\partial r_{k(l)t}}, \frac{\partial p_t^*}{\partial T_l} > 0 \tag{8.42}$$

$$\frac{\partial p_t^*}{\partial T_{k(l)}} < 0 \tag{8.43}$$

$$\frac{\partial p_t^*}{\partial T^*}(T_{k(l)}^{-1} - T_l^{-1}) > 0 \tag{8.44}$$

These results may be interpreted in the following way. An increase in the direct price of the energy of optimal type $k(l)$ used for transforming it into energy of type l to be utilized for providing service of kind l, has the same effect as a price increase $\delta p_t > 0$ in our former model in section 8.2. The same result applies to an increase in operating and equipment expense $r_{k(l)t}$. Also in using a higher output temperature T_l or a lower input temperature $T_{k(l)}$ the same consequence is obtained. As for the environment temperature T^*, an increase $\delta T^* > 0$ will have the same effect as a price increase, if input temperature $T_{k(l)}$ is below output temperature T_l, and the reverse effect if output temperature T_l is below input temperature $T_{k(l)}$. A warmer environment

will correspond to a cost increase when energy temperature is raised and to a cost decrease when energy temperature is lowered. This result, as well as the former consequenses appear to be in full agreement with intuition.

8.4. Economic model of household energy utilization including opportunities to reuse energy output (feedback).

The third energy utilization model introduced is somewhat more general in nature than those already treated, and they may therefore be considered as special cases of this third model.

As before, the household has the opportunity to purchase energy flows corresponding to different temperatures from outside sources. Flows will be positive when arriving from the environment and negative when leaving the household to the environment. These *primary* energy flows may be transformed into *secondary* energy flows by means of equipment the household has access to. Such equipment will be described as *transformation processes* Among these processes we have "dummy" processes available, which leave the corresponding incoming energy flows unaffected.

Secondary energy flows are fed into other equipment also described in the form of processes and called *service processes* This equipment, when supplied with energy flows in suitable forms, provides services to the household. The household then evaluates the services delivered according to a utility function.

The service equipment, when in use, will have outgoing (waste) energy flows. These flows might be of such a form that they can be recycled as inputs into other processes. Also a transformation process might yield as an output energy in different forms. All of these forms might not be required by the service equipment and residual flows can also be recycled supplementing the primary energy inputs.

The total number of energy forms present in the entire system is a given number N, the number of transformation processes is K and the number of service processes is M. The jth transformation process is described by two N-dimensional column vectors, an input vector y_j with non-negative components y_{ij} and an output vector z_j with non-negative components z_{ij}:

$$y_j = \begin{pmatrix} y_{1j} \\ y_{2j} \\ \vdots \\ y_{Nj} \end{pmatrix} \tag{8.45}$$

$$z_j = \begin{pmatrix} z_{1j} \\ z_{1j} \\ \vdots \\ z_{NJ} \end{pmatrix} \tag{8.46}$$

These vectors describe the energy inputs and outputs of transformation process j when this process is run on a *unit activity level*. Several of the components of y_j and z_j would usually be zero-valued. On unit activity level, the process will require $y_{1j}, y_{2j}, \ldots, y_{Nj}$ as input flows of energy of temperatures $T_1, T_2, \ldots, T_N$ and provide output flows $z_{1j}, z_{2j}, \ldots, z_{Nj}$ of temperatures $T_1, T_2, \ldots, T_N$. The input and output vectors are related according to first and second law relationships to be described below.

Similar applies for the service processes the activily levels of which influence the utility function of the household. For service process k, it is described by an N-dimensional non-negative input vector a_k and an N-dimensional non-negative output vector b_k, in which a_{ik} is the ith component of a_k describing the input flow and b_{ik} the output flow of energy of temperature T_i, when this kth process is run on a unit activity level.

Let us use the designation $|y_j|$ for the component sum $\sum_{i=1}^{N} y_{ij}$ and similar for $|z_j|$, $|a_k|$, $|b_k|$. The first law applied to transformation processes then requires:

$$|y_j| = |z_j|, \quad j=1,2,\ldots,K \tag{8.47}$$

and applied to service processes:

$$|a_k| = |b_k|, \quad k=1,2,\ldots,M \tag{8.48}$$

Let us now assume that the entropy production of the various processes is proportional to the level of activity at which each process is run and that s_j is the given entropy production rate of transformation process j and σ_k the similar rate of service process k. Introducing the constant N-dimensional row vector:

$$\tau = (T_1^{-1}, T_2^{-1}, \ldots, T_N^{-1}) \tag{8.49}$$

the entropy production at unit activity level of transformation process j will be:

$$\tau(z_j - y_j) = s_j \tag{8.50}$$

and of service process k:

$$\tau(b_k - a_k) = \sigma_k \tag{8.51}$$

When pure work occurs as a flow, i e a power, this corresponds to infinite temperature and the corresponding component in τ is then zero-valued.

As we know from previous chapters, the second-order efficiency requires reference to exergy and therefore to an environmental temperature T^*. Without specifying the origin of such a temperature, we define the second-order efficiency of transformation process j and service process k respectively as:

$$\xi_j = \frac{|z_j| - T^*\tau z_j}{|y_j| - T^*\tau y_j} = 1 - \frac{T^*\sigma_j}{|y_j| - T^*\tau y_j} = \frac{|z_j| - T^*\tau z_j}{|z_j| - T^*\tau z_j + T^*\sigma_j} \tag{8.52}$$

$$\xi_k = \frac{|b_k| - T^*\tau b_k}{|a_k| - T^*\tau a_k} = 1 - \frac{T^*\tau\sigma_k}{|a_k| - T^*\tau a_k} = \frac{|b_k| - T^*\tau b_k}{|b_k| - T^*\tau b_k + T^*\sigma_k} \tag{8.53}$$

which shows alternative formulations based on the relation that input exergy equals output exergy plus the product of environmental temperature and entropy production.

Let us now introduce non-negative activity levels $\alpha_1, \alpha_2, \ldots, \alpha_K$ for the transformation processes and $\beta_1, \beta_2, \ldots, \beta_M$ for the service processes. The *total* input and output vectors of the transformation processes as a whole may then be written:

$$y = \sum_{j=1}^{K} \alpha_j y_j = Y\alpha \tag{8.54}$$

$$z = \sum_{j=1}^{K} \alpha_j z_j = Z\beta \tag{8.55}$$

where Y and Z are $N \times K$-dimensional matrices, y and z N-dimensional column vectors and α a K-dimensional column vector. Similarly we obtain for the service processes as a whole:

$$a = \sum_{k=1}^{M} \beta_k a_k = A\beta \tag{8.56}$$

$$b = \sum_{k=1}^{M} \beta_k b_k = B\beta \tag{8.57}$$

where A and B are $N \times M$-dimensional matrices, a and b N-dimensional vectors and β an M-dimensional vector.

In order for activity vector β to be feasible, there must be a sufficient supply of all kinds of energy necessary for running the respective service processes having non-zero components in β. Hence an important constraint is that $a \leq z$ or:

$$A\beta \leq Z\alpha \tag{8.58}$$

The residual energy flows $Z\alpha - A\beta$ may be recycled into the transformation processes if they are of use there. This flow together with the output of the service processes will represent the feedback in the system $Z\alpha - A\beta + B\beta$. The input from external sources into the system written as an N-dimensional column vector x thus is the input flow of the transformation processes less the feedback flow:

$$x = (Y - Z)\alpha + (B - A)\beta \tag{8.59}$$

By multiplying both members by τ and using (8.50)-(8.51) we obtain:

$$\tau x = -\sum_{j=1}^{K} s_j \alpha_j - \sum_{k=1}^{M} \tau_k \beta_k \tag{8.60}$$

and the total entropy production rate of the system (dot notation omitted) when given all activity levels in α and β will be:

$$\hat{S} = -\tau x = s\alpha + \sigma\beta \tag{8.61}$$

where s is a K-dimensional row vector collecting the entropy production rates of the transformation processes at unit activity levels and σ similarly an M-dimensional row vector for the service processes. Since s, α, σ, β are all non-negative so must $-\tau x$ be. Therefore whenever an irreversible process is running, we must have a non-zero vector x, or, in other words, the system will always require an interaction with the environment whenever irreversible processes are running.

Figure 8.3 illustrates the various flows in the system, all arrows representing N-dimensional vectors.

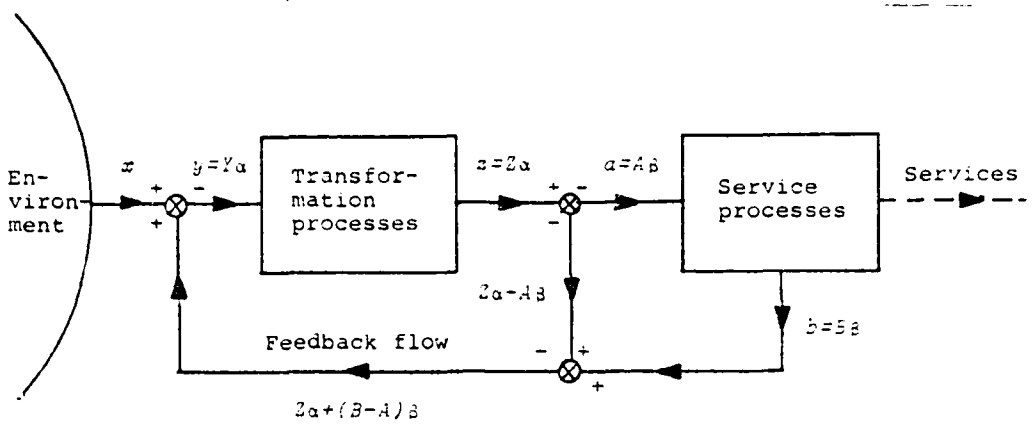

8.3

Figure 8.3. Schematic representation of energy flows in household model with recycling opportunities

We are now in a position to formulate the utility maximization problem of the household under consideration. The service volumes provided by the equipment k may be considered a monotonic function of the activity level β_k of that process. Therefore the utility function being a function of the service levels, and having positive marginal utilities, will be an indirect function of the activity levels:

$$u = u(\beta_1, \beta_2, \ldots, \beta_M) \tag{8.62}$$

The household pays the positive price p_i per unit of input of energy of temperature T_i. The operating and capital costs for running the processes are assumed to be proportional to the respective activity levels. The corresponding unit costs are denoted $r=(r_1, r_2, \ldots, r_K)$ for the transformation processes and $\rho=(\rho_1, \rho_2 \ldots, \rho_M)$ for the service processes. The total (net) outlay is not allowed to exceed a given budget limit $\hat{C}$. Collecting all prices p_i into a row vector $p=(p_1, p_2, \ldots, p_N)$, the budget constraint will be:

$$px + r\alpha + \rho\beta = p((Y-Z)\alpha+(A-B)\beta) + r\alpha + \rho\beta \leq \hat{C} \tag{8.63}$$

Also we have the vector constraint (8.58) The household is now to choose optimal values of all different α_j and β_k subject to the constraints and given the matrices Y, Z, A, B, and the vectors p, r, ρ and the budget $\hat{C}$.

Introducing a non-negative multiplier λ for (8.63) and an N-dimensional row vector of non-negative multipliers $\mu=(\mu_1, \mu_2, \ldots, \mu_N)$ for (8.58) we form the Lagrangian:

$$L = u(\beta) + \lambda(\hat{C}-p((Y-Z)\alpha+(A-B)\beta)+r\alpha+\rho\beta) + \mu(Z\alpha-A\beta) \tag{8.64}$$

The necessary Kuhn-Tucker conditions will be:

$$\frac{\partial L}{\partial \alpha_j} = -\lambda(p(y_j-z_j)+r_j) + \mu z_j \leq 0 \tag{8.65}$$

$$\frac{\partial L}{\partial \beta_k} = \frac{\partial u}{\partial \beta_k} - \lambda(p(a_k-b_k)+\rho_k) - \mu a_k \leq 0 \tag{8.66}$$

$$\frac{\partial L}{\partial \lambda} = \hat{C} - p((Y-Z)\alpha + (A-B)\beta) - r\alpha - \rho\beta \geq 0 \tag{8.67}$$

$$\frac{\partial L}{\partial \mu_i} = \sum_{j=1}^{K} Z_{ij}\alpha_j - \sum_{k=1}^{M} A_{ik}\beta_k \geq 0 \tag{8.68}$$

$$\alpha, \beta, \lambda, \mu \geq 0 \tag{8.69}$$

or rewriting (8.65), (8.66), (8.68) in matrix-vector form:

$$\mu Z \leq \lambda(p(Y-Z)+r) \tag{8.70}$$

$$\nabla u \leq \lambda(p(A-B)+\rho) + \mu A \tag{8.71}$$

$$A\beta \leq Z\alpha \tag{8.72}$$

where ∇u is the gradient of u arranged as a row vector. Since strict inequalities require zero-valued variables and positive variables require equalities we also have:

$$\mu Z\alpha = \lambda p((Y-Z)+r)\alpha \tag{8.73}$$

$$\nabla\mu\beta = \lambda(p(A-B+p)\beta + \mu A\beta \tag{8.74}$$

$$\lambda\hat{C} = \lambda p((Y-Z)\alpha+(A-B)\beta+r\alpha+p\beta) \tag{8.75}$$

$$\mu Z\alpha = \mu A\beta \tag{8.76}$$

Let us first rule out service equiment that is *technically infeasible*. If for some service process i its input vector α_i has a positive requirement of energy i, i e $\alpha_{ik}>0$, and no transformation process has such an output, i e $z_{ij}=0$ for all j, then obviously (8.68) can only be met with $\beta_k=0$ (an electric toaster cannot be used in a non-electrified area with no access to donkey generators). Such infeasible equipment can easily be ruled out of our problem, and we therefore adopt the convention that the β_k-variables do not represent any such equipment.

We nlw show that $\lambda>0$ and that therefore the entire budget $\hat{C}$ is spent. Assume by hypothesis the contrary case $\lambda=0$. Then by (8.71) $\mu A>0$ and for each k there exists an i depending on k, $i(k)$, such that $\mu_{i(k)}>0$ and $\alpha_{i(k)k}>0$. Since equipment k is not infeasible, there is at least one transformation process j providing energy $i(k)$, i e $j(i(k))$ with $z_{i(k)j(i(k))}>0$. Therefore $\mu z_{j(i(k))}>0$ which, by (8.70) requires $\lambda>0$. Hence $\lambda>0$ and we have an equality in (8.67). Furthermore we cannot have $\beta=0$, since (8.73), (8.75) and (8.76) would then require $\hat{C}=0$ contrary to hypothesis. This means that the budget is spent in such a way that some service as well as some transformation process must be in use at the optimum, quite as expected. The transformation process might however be a dummy process.

We now reformulate some of our equations in order to study relationships between the optimal behaviour of the household and the exergy consumption (or entropy production) that this behaviour gives rise to. First of all we introduce the following diagonal matriz Γ, in which T^* is interpreted as an environment

temperature and is assumed to be different from any other energy temperature:

$$\Gamma = \begin{pmatrix} (1-T^*T_1^{-1}) & & & \\ & (1-T^*T_2^{-1}) & & \\ & & \ddots & \\ & & & (1-T^*T_N^{-1}) \end{pmatrix} \tag{8.77}$$

This matrix will thus have a unique inverse Γ^{-1} which is diagonal having the element $(1-T^*T_i^{-1})^{-1}$ in its ith diagonal position.

Using Γ, the temperature-discounted prices collected in a row vector may be written:

$$\bar{p} = p\Gamma^{-1} \tag{8.78}$$

We also introduce exergy input and output measures for the various processes by premultiplying their respective matrices by Γ:

$$\bar{Y} = \Gamma Y \tag{8.79}$$

$$\bar{Z} = \Gamma Z \tag{8.80}$$

$$\bar{A} = \Gamma A \tag{8.81}$$

$$\bar{B} = \Gamma B \tag{8.82}$$

At unit activity level, exergy input of transformation process j will then be $|\Gamma y_j| = |\bar{y}_j|$, the exergy output $|\Gamma z_j| = |\bar{z}_j|$ and the entropy production:

$$s_j = (|\Gamma y_j| - |\Gamma z_j|)T^{*-1} = |\bar{y}_j - \bar{z}_j|T^{*-1} \tag{8.83}$$

and similarly for the kth service process:

$$\sigma_k = (|\Gamma a_j| - |\Gamma b_j|)T^{*-1} = |\bar{a}_j - \bar{b}_j|T^{*-1} \tag{8.84}$$

where $\bar{y}_j$ is the jth column of $\bar{Y}$ etc. Out cost constraint can thereby be rewritten as:

$$\hat{C} \geq \bar{p}(\bar{Y}-\bar{Z})\alpha + \bar{p}(\bar{A}-\bar{B})\beta + r\alpha + \rho\beta \tag{8.85}$$

and, if all diagonal elements of Γ are positive, our second constraint comparing the output of transformation processes and the input of service processes will obtain the form:

$$\bar{Z}\alpha - \bar{A}\beta \geq 0 \tag{8.86}$$

Our objective function $u(\beta)$ is entirely unaffected by these substitutions. Hence, our original problem will be identical in structure with the problem to maximize $u(\beta)$ subject to (8.85), (8.86) in which *temperature-discounted prices* and *exergy* input/output matrices appear rather than *energy prices* and input/output matrices referring to *energy flows*. Due to these similarities the Kuhn-Tucker conditions will be the same as previously obtained having taken these substitutions into consideration and therefore the solution (or solution set) will be exactly the same in either formulation.

Up to now we have considered the prices included in p, r and ρ as given. The solution in α, β, λ and μ (or $\bar{\mu}=\mu\Gamma^{-1}$) at the optimum will be functions of these prices.

Varying the prices will therefore result in variations of optimal activity levels and multipliers. For a given set of prices there will be a certain entropy production and a certain exergy consumption:

$$T^*\hat{S} = T^*(\sigma\alpha+\sigma\beta) \tag{8.87}$$

These also depend on the prices, and price variations in the general case, also will result in variations in exergy consumption. Therefore it is of interest to inquire into the relationship between the price parameters and exergy consumption, since the latter reflects the true resource that is consumed.

As a starting point let us revert to our original problem giving a solution based on the given prices. For this solution the utility function $u(\beta)$ will take on its constrained maximum level, say $u(\beta)=\hat{u}$ and the entire given budget $\hat{C}$ will be spent. Let us now allow the prices to be adjusted (but kept non-negative) such that the utility level at optimum will not fall short of $\hat{u}$ and the expenditure remain at $\hat{C}$, in such a way that the exergy consumption $T^*\hat{S}$ in (8.87) is minimized. Introducing new non-negative multipliers ω, γ and ε, the latter a row vector, we form the Lagrangean:

$$L = T^*(s\alpha+\alpha\beta) + \omega(\hat{u}-u(\beta)) + \gamma(\bar{p}(\bar{Y}-\bar{Z})\alpha+r\alpha+\bar{p}(\bar{A}-\bar{B})\beta+\rho\beta-\bar{C}) + \\ + \varepsilon(\bar{A}\beta-\bar{Z}\alpha) \tag{8.88}$$

Differentiating, we obtain our Kuhn-Tucker conditions written in the following matrix-vector form:

$$T^*s + \gamma(\bar{p}(\bar{Y}-\bar{Z})+r) - \varepsilon\bar{Z} \geq 0 \tag{8.89}$$

$$T^*\sigma - \omega\nabla u + \gamma(\bar{p}(\bar{A}-\bar{B})+\rho) + \varepsilon\bar{A} \geq 0 \tag{8.90}$$

$$\gamma((\bar{Y}-\bar{Z})\alpha + (\bar{A}-\bar{B})\beta) \geq 0 \tag{8.91}$$

$$\hat{u} - u(\beta) \leq 0 \tag{8.92}$$

$$\hat{C} - \bar{p}(\bar{Y}-\bar{Z})\alpha - r\alpha - \bar{p}(\bar{A}-\bar{B})\beta - \rho\beta \leq 0 \tag{8.93}$$

$$\bar{A}\beta - \bar{Z}\alpha \leq 0 \tag{8.94}$$

$$T^*\sigma + \gamma(\bar{p}(\bar{Y}-\bar{Z})+r)-\varepsilon\bar{Z})\alpha = 0 \tag{8.95}$$

$$(T^*\sigma-\omega\nabla u+\gamma(\bar{p}(\bar{A}-\bar{B})+\rho)+\varepsilon\bar{A})\beta = 0 \tag{8.96}$$

$$\gamma\bar{p}((\bar{Y}-\bar{Z})\alpha+(\bar{A}-\bar{B})\beta) = 0 \tag{8.97}$$

$$\omega(\hat{u}-u(\beta)) = 0 \tag{8.98}$$

$$\gamma(\hat{C}-\bar{p}(\bar{Y}-\bar{Z})\alpha-r\alpha-\bar{p}(\bar{A}-\bar{B})\beta-\rho\beta) = 0 \tag{8.99}$$

$$\varepsilon(\bar{A}\beta-\bar{Z}\alpha) = 0 \tag{8.100}$$

$$\alpha,\beta,\bar{p},\omega,\gamma,\varepsilon \geq 0 \tag{8.101}$$

where (8.91) is the condition obtained by differentiating with respect to all discounted prices. This set of conditions has some important consequences.

Eq (8.97) is γ multiplied by the total expenditure on energy purchases. If at least one energy input used has a positive price, we must require:

$$\gamma = 0 \tag{8.102}$$

Adding (8.95) and (8.96) and using (8.100), (8.102) amd (8.87) yields:

$$\omega\nabla u\beta = \hat{S} \tag{8.103}$$

If at least one process in use is irreversible, $\hat{S}>0$, which requires $\omega>0$. Hence, utility will remain at is original level $\hat{u}$ according to (8.98). Since the household behaves optimally (8.70) and (8.71) are valid, which we now write on the form:

$$\lambda(\bar{p}(\bar{Y}-\bar{Z})+r) - \bar{\mu}\bar{Z} \geq 0 \tag{8.104}$$

$$\lambda(\bar{p}(\bar{A}-\bar{B})+\rho) - \nabla u + \bar{\mu}\bar{A} \geq 0 \tag{8.105}$$

Since $\omega > 0$, we may divide (8.89)-(8.90) by ω, which, using $\gamma = 0$, gives us:

$$\frac{T^*\sigma}{\omega} = \frac{\varepsilon}{\omega}\bar{Z} \geq 0 \tag{8.106}$$

$$\frac{T^*\sigma}{\omega} - \gamma u + \frac{\varepsilon}{\omega}\bar{A} \geq 0 \tag{8.107}$$

These two inequalitites are to be compared with (8.104)-(8.105), which shows that if prices are chosen so as to satisfy:

$$\bar{p}(\bar{Y}-\bar{Z}) + r = \frac{T^*\sigma}{\omega\lambda} \tag{8.108}$$

$$\bar{p}(\bar{A}-\bar{B}) + \rho = \frac{T^*\sigma}{\omega\lambda} \tag{8.109}$$

the two pairs of conditions coincide. A sufficient condition for this to occur is (i) that all *temperature-discounted priees are equal* and (ii) that *all operating and capital costs for the equipment are proportional to the entropy production* in each process. To show this, we write the discounted prices in the form:

$$\bar{p} = (1,1,\ldots,1)c \tag{8.110}$$

where c is a positive constant. Using (8.83)-(8.84) we then obtain:

$$\left(\frac{1}{\omega\lambda} - c\right)T^*s = r \tag{8.111}$$

$$\left(\frac{1}{\omega\lambda} - c\right)T^*\sigma = \rho \tag{8.112}$$

Obviously we must have $c < \omega^{-1}\lambda^{-1}$ whenever $r \neq 0$ or $\rho \neq 0$. These two equations show that with a coefficient of proportionality $(\omega^{-1}\lambda^{-1} - c)T^*$ between entropy production and capital/operating cost, where c is a constant temperature-discounted price for all kinds of energy input, the two pairs of conditions must coincide. Furthermore, in the case of negligable capital/operating costs

The temperature-discounted price must obey $\bar{p}_i = c = \omega^{-1}\lambda^{-1}$

Combining (8.73)-(8.76) we obtain:

$$\nabla u \beta = \lambda \hat{C} \tag{8.113}$$

which by (8.103) means:

$$T^* \hat{S} = \omega \lambda \hat{C} \tag{8.114}$$

Hence (8.111)-(8.112) may be rewritten as:

$$\frac{r_j}{T^* \hat{S}} + c = \frac{s_j}{\hat{S}} \hat{C}, \quad j=1,2,\ldots,K \tag{8.115}$$

$$\frac{\rho_k}{T^* \hat{S}} + c = \frac{\sigma_k}{\hat{S}} \hat{C}, \quad k=1,2,\ldots,M \tag{8.116}$$

This means that the total energy cost per unit of activity level in each process is made up in such a way that it equals the share of the total cost that the entropy production of each process represents.

The model treated above shows the following. If a household with given irreversible equipment maximizes its utility while treating all energy prices as given, it will minimize its use of exergy on a given level of utility and with a given budget, when the cost for running the processes exactly reflect the amount of exergy consumed in the processes. This occurs when all temperature-discounted prices of energy inputs are equal and all operating and capital costs proportional to the respective rates of entropy production. Once again, this model reminds us of the important rôle played by the temperature-discounted price concept.

8.5. Example of a household using energy for heating and lighting purposes

As an illustration of the theory presented in the foregoing section we provide the following example of an interpretation of the model. A household needs electricity for lighting its house and heat for providing a comfortable temperature. The budget for these purposes is $\hat{C}$. As energy inputs, the household may purchase electricity and/or steam heat of temperature T_2 delivered from a utility network. The heat needed for space heating is of at least room temperature T_3 and the temperature of the environment of the house to which the space heat leaks is T_4. The temperature of electricity delivered is $T_1=\infty$. When using electricity for lighting-up purposes, heat from light-bulbs is discharged to the space in which these bulbs are located at room temperature.

The service processes are therefore $M=2$ in number. Process 1, space heating, has room temperature heat as an input and environment heat as an output. Process 2, lighting, has electricity as an input and room-temperature heat as an output. Altogether there are $N=4$ levels of energy quality present. Using energy input to define unit activity level, we have the following input and output matrices of the service processes:

$$A = \begin{pmatrix} 0 & 1 \\ 0 & 0 \\ 1 & 0 \\ 0 & 0 \end{pmatrix} \tag{8.117}$$

$$B = \begin{pmatrix} 0 & 0 \\ 0 & 0 \\ 0 & 1 \\ 1 & 0 \end{pmatrix} \tag{8.118}$$

As transformation processes the household needs either resistance heating equipment (process 1) transforming electrical energy into heat of room temperature or a heat exchanger (process 2) trans-

forming steam heat into heat of room temperature (or possibly both). Also we need to introduce two dummy processes, the first (process 3) transforming electricity into electricity, and the second (process 4) transforming heat of room temperature into heat of the same temperature. These dummy processes are needed for theoretical purposes, since there is no direct external input into any service process and no direct feed-back from one process (in this case lighting) into any other process (in this case space heating). Thus we have a total of $K=4$ transformation processes. Using energy input levels, as before, for defining unit activity levels, we have the following input and output matrices:

$$Y = \begin{pmatrix} 1 & 0 & 1 & 0 \\ 0 & 1 & 0 & 0 \\ 0 & 0 & 0 & 1 \\ 0 & 0 & 0 & 0 \end{pmatrix} \tag{8.119}$$

$$Z = \begin{pmatrix} 0 & 0 & 1 & 0 \\ 0 & 0 & 0 & 0 \\ 1 & 1 & 0 & 1 \\ 0 & 0 & 0 & 0 \end{pmatrix} \tag{8.120}$$

Since the transformation output cannot fall short of the service input, we have $Z\alpha \geq A\beta$, which in this example is written as:

$$\begin{pmatrix} 0 & 0 & 1 & 0 \\ 0 & 0 & 0 & 0 \\ 1 & 1 & 0 & 1 \\ 0 & 0 & 0 & 0 \end{pmatrix} \begin{pmatrix} \alpha_1 \\ \alpha_2 \\ \alpha_3 \\ \alpha_4 \end{pmatrix} = \begin{pmatrix} \alpha_3 \\ 0 \\ \alpha_1+\alpha_2+\alpha_4 \\ 0 \end{pmatrix} \geq \begin{pmatrix} 0 & 1 \\ 0 & 0 \\ 1 & 0 \\ 0 & 0 \end{pmatrix} \begin{pmatrix} \beta_1 \\ \beta_2 \end{pmatrix} = \begin{pmatrix} \beta_2 \\ 0 \\ \beta_1 \\ 0 \end{pmatrix} \tag{8.121}$$

This gives us the two constraints:

$$\begin{cases} \alpha_3 \geq \beta_2 \\ \alpha_1+\alpha_2+\alpha_4 \geq \beta_1 \end{cases} \tag{8.122}$$

Assuming that the household cannot purchase energy of room temperature from external sources, we must require $x_3 \leq 0$, which indicates that there might be an opportunity of an external discharge of excess room-temperature heat, but certainly no external input of this heat. The external flow directions of other kinds of energy are natural consequences of the optimization procedure, i e that electricity may be supplied $x_1 \geq 0$, steam heat may be supplied $x_2 \geq 0$ and environmental heat may be discharged $x_4 \leq$. Let us write these inequalities in the following form for simplicity, despite the fact that three of the inequalities are of no importance:

$$x = (Y-Z)\alpha+(A-B)\beta = \begin{cases} \alpha_1+\beta_2 & \geq 0 \\ \alpha_2 & \geq 0 \\ -\alpha_1-\alpha_2+\beta_1-\beta_2 & \geq 0 \\ -\beta_1 & \leq 0 \end{cases} \qquad (8.123)$$

For these inequalities we need a set of multipliers which we write $\lambda\nu = \lambda(\nu_1, \nu_2, \ldots, \nu_4)$, knowing λ of the budget constraint to be positive.

The household as an energy-using system may now be described as in figure 8.4.

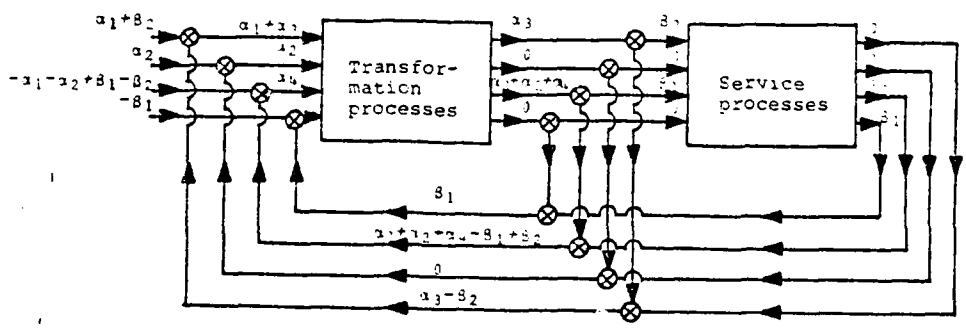

Figure 8.4. System of energy flows in household example. Top four flows indicate flows in order of falling temperature

The household is assumed to maximize a utility function of the Cobb-Douglas form:

$$u=\beta_1^{\delta_1}\ \beta_2^{\delta_2} \tag{8.124}$$

where δ_1, δ_2 are positive constants that satisfy $\delta_1+\delta_2 \leq 1$. The marginal utilities collected in a row vector, the gradient of u, will then be:

$$\nabla u = u\left(\frac{\delta_1}{\beta_1}, \frac{\delta_2}{\beta_2}\right) \tag{8.125}$$

in which the δ_k reflect the relative marginal importance of the two kinds of services provided.

The prices of electricity and network steam are denoted p_1 and p_2, where as no external price is attached neither to room temperature energy nor environmental energy, $p_3=p_4=0$. The operating and capital costs of all equipment are neglected for the sake of simplicity $r=0, \rho=0$.

The Langrangean of this household's problem needs to be extended with an additional term for the inequalities (8.123) as compared to the model in the previous section:

$$\begin{aligned} L = u &+ \lambda(\hat{C}-p(Y-Z)\alpha-p(A-B)\beta) + \\ &+ \mu(Z\alpha-A\beta) - \nu\lambda((Y-Z)\alpha + (A-B)\beta) \end{aligned} \tag{8.126}$$

The Kuhn-Tucker requirements for a constrained maximum of u are now:

$$-\lambda(p_1+\nu_1-\nu_3, p_2+\nu_2-\nu_3, 0, 0) + (\mu_3, \mu_3, \mu_1, \mu_3) \leq 0 \tag{8.127}$$

$$u\left(\frac{\delta_1}{\beta_1}, \frac{\delta_2}{\beta_2}\right) - \lambda(\nu_3-\nu_4, p_1+\nu_1-\nu_3) \leq 0 \tag{8.128}$$

$$\hat{C}-p_1\alpha_1-p_2\alpha_2-p_1\beta_2 \geq 0 \tag{8.129}$$

$$\lambda, \mu \geq 0 \tag{8.130}$$

$$\begin{cases} \nu_1 \leq 0 \\ \nu_2 \leq 0 \\ \nu_3 \geq 0 \\ \nu_4 \geq 0 \end{cases} \tag{8.131}$$

and inequalities (8.122) and (8.123). Also a strict inequality requires a zero-valued variable and a positive variable an equality. From (8.128) we obtain that β_1, β_2 both are positive in order for the multipliers to remain finite. Hence from (8.123) we find $\nu_1=\nu_4=0$. From (8.127) we obtain $\mu_1=\mu_3=0$ and therefore from (8.128) and (8.127):

$$p_1>\nu_3>0 \tag{8.132}$$

$$p_2\geq\nu_3-\nu_2 \tag{8.133}$$

The first of these two inequalities requires immediately that $\alpha_1=0$, i e no resistance heating. The levels of the two dummy processes α_3 and α_4 are only limited by (8.122). Hence we may choose:

$$\begin{cases} \alpha_3=\beta_2 \\ \alpha_4=\beta_1-\alpha_2 \end{cases} \tag{8.134}$$

Higher values of these two activity levels had been permitted but would only have represented additional circular flows of electricity and room temperature energy, having no consequence to the results. From $\nu_3>0$ we obtain the equality:

$$\alpha_2=\beta_1-\beta_2 \tag{8.135}$$

showing that always $\beta_1\geq\beta_2$.

Postmultiplication of (8.128) by β, taking the quotient of the two components and solving for ν_3 gives us:

$$\nu_3 = \frac{\xi_1}{1+\frac{\delta_2\beta_1}{\delta_1\beta_2}} \tag{8.136}$$

This shows that (8.132) gives no additional information, whereas (8.133) may be rewritten according to:

$$\frac{\beta_1}{\beta_2} \geq \frac{\delta_1}{\delta_2}\left(\frac{p_1}{p_2} - 1\right) - \frac{\nu_2}{p_2}\left(\frac{\delta_1}{\delta_2} + \frac{\beta_1}{\beta_2}\right) \tag{8.137}$$

where $\nu_2 \leq 0$ and where a strict inequality requires $\alpha_2 = 0$. We may distinguish two possible cases, the first <u>case I</u>, occurring for:

$$\frac{\delta_1}{\delta_2}\left(\frac{p_1}{p_2} - 1\right) > 1 \tag{8.138}$$

This case requires $\beta_1 > \beta_2$ and $\alpha_2 > 0$ and therefore $\nu_2 = 0$. A positive α_2 yields equality in (8.137):

$$\frac{\beta_1}{\beta_2} = \frac{\delta_1}{\delta_2}\left(\frac{p_1}{p_2} - 1\right) \tag{8.139}$$

which gives ν_3 the value:

$$\nu_3 = p_2 \tag{8.140}$$

The second case, <u>case II</u>, is obtained when:

$$\frac{\delta_1}{\delta_2}\left(\frac{p_1}{p_2} - 1\right) \leq 1 \tag{8.141}$$

If this is a strict inequality, then we either have equality in (8.137) with $\nu_2 < 0$ and therefore $\alpha_2 = 0$ or strict in equality in (8.137) demanding $\alpha_2 = 0$. If this instead were an equality, either $\beta_1/\beta_2 = 1$ and therefore $\alpha_2 = 0$ or $\nu_2 < 0$ and $\alpha_2 = 0$. Therefore (8.141) implies:

$$\alpha_2 = \beta_1 - \beta_2 = 0 \quad . \tag{8.142}$$

and by (8.136):

$$v_3 = \frac{p_2}{1+\frac{\delta_2}{\delta_1}} \tag{8.143}$$

Using the budget constraint, it is now a simple task to obtain values of the remaining variables. The results are summarized in table 8.1.

	CASE I $\frac{p_1}{p_2} > 1 + \frac{\delta_2}{\delta_1}$	CASE II $\frac{p_1}{p_2} \leq 1 + \frac{\delta_2}{\delta_1}$
$a_1 =$	0	0
$a_2 =$	$\hat{C}\delta_1(\delta_1+\delta_2)(p_2)^{-1}(1-\frac{p_2\delta_2}{\delta_1(p_1-p_2)})^{-1}$	0
$a_3 \geq$	$\hat{C}\delta_2(\delta_1+\delta_2)^{-1}(p_1-p_2)^{-1}$	$\hat{C}\, p_1^{-1}$
$a_4 \geq$	$\hat{C}\delta_2(\delta_1+\delta_2)^{-1}(p_1-p_2)^{-1}$	$\hat{C}\, p_1^{-1}$
$\beta_1 =$	$\hat{C}\delta_1(\delta_1+\delta_2)^{-1}p_2^{-1}$	$\hat{C}\, p_1^{-1}$
$\beta_2 =$	$\hat{C}\delta_2(\delta_1+\delta_2)^{-1}(p_1-p_2)^{-1}$	$\hat{C}\, p_1^{-1}$
$\lambda =$	$((\delta_1+\delta_2)/\hat{C})^{1-\delta_1-\delta_2}(\delta_1/p_2)^{\delta_1}(\delta_2/(p_1-p_2))^{\delta_2}$	$(\delta_1+\delta_2)(p_1/\hat{C})^{1-\delta_1-\delta_2}p_1^{-1}$
$u_1 =$	0	0
$u_2 \geq$	0	0
$u_3 =$	0	0
$u_4 \geq$	0	0
$v_1 =$	0	0
$v_2 =$	0	$p_1\delta_1(\delta_1+\delta_2)^{-1} - p_2 \leq 0$
$v_3 =$	p_2	$p_1\delta_1(\delta_1+\delta_2)^{-1}$
$v_4 =$	0	0
$u \lesseqgtr$	$(\hat{C}/(\delta_1+\delta_2))^{\delta_1+\delta_2}\delta_1^{\delta_1}\delta_2^{\delta_2}(p_1-p_2)^{-\delta_2}p_2^{-\delta_1}$	$(\hat{C}/p_1)^{\delta_1+\delta_1}$

Table 8.1. Solution to model for the two possible cases given by (8.138) and (8.141)

Let us now take some entropy considerations. At unit activity levels, the transformation processes will produce entropy at rates given by:

$$s = ((-\tfrac{1}{\infty}+T_3^{-1}),(-T_2^{-1}+T_3^{-1}),(-\tfrac{1}{\infty}+\tfrac{1}{\infty}),(-T_3^{-1}+T_3^{-1}) =$$
$$= (T_3^{-1}, T_3^{-1}-T_3^{-1}, 0, 0) \tag{8.144}$$

and the service processes similarly at rates:

$$\sigma = (T_4^{-1}-T_3^{-1}, T_3^{-1}) \tag{8.145}$$

Investigating into the problem of finding a price system that, at a given level of utility $\hat{u}$, minimizes total entropy $\hat{S}=s\alpha+\sigma\beta$ we form tha Langrangean:

$$L = -s\alpha - \sigma\beta + \zeta(u-\hat{u}) \tag{8.146}$$

where α,β and u are functions of p_1,p_2 and $\hat{C}$ according to table 8.1. Differentiating with respect to p_1,p_2 in case I yields the solution:

$$p_1 = \frac{p_2}{1-T_4T_3^{-1}} \tag{8.147}$$

which shows that the two temperature-discounted prices must be equal. Inserting these prices into the exergy consumtion $T_4\hat{S}$ yields:

$$T_4\hat{S} = \hat{C}p_1^{-1} \tag{8.148}$$

In case II all variables depend on p_1 alone. Therefore there will be no reference to p_2 enabling us to derive an optimal relationship between the prices. Also in this case the exergy consumtion is given by (8.148).

The two cases are interpreted as follows. When the marginal propensity to consume light is low (δ_ℓ small), the household purchases electricity and heat separately, and uses up whatever waste heat the lighting system provides for space heating. When δ_ℓ is very large on the other hand, all space heating will be provided by the waste heat and there will be no need for additional separate heat purchases. In the former case, a household will reach a given utility level at the same time minimizing entropy production (or exergy consumtion) when the energy price system is such that temperature discounted prices are equal. In the case with a high δ_ℓ-value no such conclusion can be drawn. It might be noted that lighting equipment may be used as a representative for all such kinds of electrical equipment. The model would easily be extended to cover additional needs of service such as oven heating or hot water, introducing additional temperature levels and requiring a higher value of N.

8.6. Relationship between optimal energy utilization and other consumption.

In the previous sections we have presented models for describing the optimal plan for energy utilization. In these models it has been assumed throughout the existence of a given maximal budget $\hat{C}$ for the purchase of energy in different qualities. This is of course an unrealistic simplification, since the utility of services using energy and the budget for this purpose are not independent of other consumed commodities.

Below we introduce the energy utilization plan as a subunit of an overall consumption plan including other g and services. The energy budget will then be part of a more extensive budget, possibly including the disutility of the labour provided by the household as well as the income from providing labour.

The following notations are used. The plan for energy inputs is described by the column vector x and p is the row vector of prices associated with x. Similarly the column vector y describes

the plan for consumption of other commodities and r is the row vector of prices associated with that set of consumption variables. The vector y may include delivered services and labour in which case such components, by convention, would be negative. If $\hat{I}$ represents unearned or any other income not accounted for by any terms in ry, the budget constraint will be:

$$px + ry \leq \hat{I} \tag{8.149}$$

Now let the preferences of the consumer or household be described by a utility function $u(x,y)$ with positive marginal utilities for commodities consumed and negative marginal utilities for absolute values of services and labour provided. This implies that all partial derivatives of u are positive.

In the models in our previous sections, we have made the implicit assumption that y is given and that the budget left over for energy purchase is given, $\hat{C}=\hat{I}-ry$. We let $u(\hat{C},y)$ denote the maximum utility for a given $\hat{C}$ and y. Using λ for the Lagrangean multiplier associated with this budget constraint, we have:

$$\lambda = \frac{\partial u(\hat{C},y)}{\partial \hat{C}} \tag{8.150}$$

which represents the marginal change in maximum utility when adjusting the budget $\hat{C}$.

We now consider the supreme problem, which, when given an optimal x for each $\hat{C}$, will be to maximize $u(\hat{C},y)$ subject to:

$$ry \leq \hat{I} - \hat{C} \tag{8.151}$$

Introducing a multiplier ζ for this inequality and forming the Lagrangean:

$$L = u(\hat{C},y) + \zeta(\hat{I}-\hat{C}-ry) \tag{8.152}$$

we obtain the necessary optimization conditions:

$$\frac{\partial u}{\partial q_i} - \zeta p_i \leq 0 \tag{8.153}$$

$$\frac{\partial u}{\partial \hat{C}} - \zeta = 0 \tag{8.154}$$

assuming $\hat{C} > 0$. We therefore find that $\lambda = \zeta$ at the overall optimum, or:

$$\frac{\partial u}{\partial \hat{C}} = \frac{\partial u}{\partial \hat{I}} = \frac{\partial u}{\partial (\hat{I} - \hat{C})} \tag{8.155}$$

The problem of choosing an optimal $\hat{C}$ is therefore to slice the total available budget $\hat{I}$ into two parts, the line of division being characterized by equal marginal utilities with respect to changes in either budget, based on the requirement that each of these two budgets be spent in an optimal way on energy and non-energy commodities respectively.

CHAPTER 9. CONCLUSIONS AND DISCUSSION

9.1. Introduction

In this concluding chapter we briefly review the main results of previous chapters and bring up some items that might have been included above, but for one or an other reason were left out. To tie up such loose ends may be a challenge for future research. Some ideas for future work along lines in this spirit conclude the chapter.

9.2. Main results of report

The chief objective throughout this work has been an attempt to study characteristics of energy envisaged as a *source resource*, i e a resource to which an economic value should and would be attached. The basic ideas underlying our treatment have been on the one hand that energy as such cannot be scarce, since it is indestructable, and on the other, what has been called the symmetry principle, i e that characteristics of energy extracted from a system of sources must be symmetric functions of the set of properties of these sources. The former principle requires that the scarcity property of energy must be described and explained by qualitative characteristics of energy, its "content", or amount, would not suffice, whereas the latter principle attaches a derived and abstract meaning to the existence of an environment.

According to economic theory a price system is employed to attach economic values to commodities to be produced, to commodities to be traded, and to commodities to be used. These values (prices) are *relative* values; in principle any multiple of a given set of prices would perform the same comparative evaluation task. Examples supporting this point are, for instance, the different price systems (monetary units) working in isolated

economies, or inflation under which relative prices remain but the value of the monetary unit changes. There are no absolute economic values; only values of one commodity compared to the value of a "numeraire". This also applies in the models we have been considering in which the exergy price was shown to be able to act as a suitable basis of comparison, and that temperature-discounted prices (etc) of energy in other forms were to be compared with the exergy price.

A few main results of the previous chapters appear to be the following. Chapters 4-6 were mainly technical in nature; nowhere did pure economic considerations enter. Although one might very well take the position that maximizing a work output subject to thermodynamical limitations, in essence, could be interpreted as an economic procedure, i e achieving a desired objective under certain limiting constraints. In any case, no economic value units (prices) were introduced until in chapter 7.

It is felt that the symmetry principle, when applied to the modelling of thermal and more complex systems of energy sources, was able to yield some new insights. As an example we believe that, for instance, the simple formulae in (4.30) and (4.28) showing explicit relationships between properties of sources (initial temperatures, heat capacities), the given entropy production $\hat{S}$ on the one hand, and maximum extractable work (exergy when $\hat{S} = 0$) and final temperature on the other. The most general extraction problem we looked into, was reported in section 5.4, where the abstraction adopted went to the limit that all extensive properties apart from internal energy were left uninterpreted. The symmetry principle also determines the final mutual temperature and other intensive properties as averages (in simple cases geometrical averages) and these values are conveniently interpreted as those of an artificial environment. The asymmetric case of having an infinite environment is then easily produced by requiring the molar content of one system element to tend toward infinity.

The ideas presented in chapter 6 treating radiation appear to be more preliminary in nature. Items that might have some degree of originality would include the definition of an ideal collector and the fifth-order polynomial equation (6.39), its solution shown in figure 6.2, determining the optimal operating temperature of the collector and thereby the maximal power output. A fair amount of space was devoted to the question of creating a maximal concentration of radiation and thus relating the second law to a geometrical principle. Ideas along such lines would hardly be original, but this has not been checked. The main models in chapters 4 and 5 were followed up by economic counterparts in chapter 7, whereas chapter 6 had no successor of this kind.

The economic models of chapters 7-8 appear to have some degree of novelty. These chapters treated energy extraction ("production") on the one hand, and energy utilization ("consumption"), on the other. In the basic models of sections 7.2, 7.4 and 7.6 the symmetry principle was applied, meaning that the "environmental" temperature was determined by the system itself, whereas other models in chapter 7 as well as in the whole of chapter 8 assumed a given constant environmental temperature T^*.

The most important result of chapter 7 appears to be the principle by which is required that the economic value of energy should be related to the corresponding amount of exergy, or using a different wording, that temperature-discounted, pressure-discounted, etc, prices, would be the relevant unit values of energy of interest to be used as yardsticks when appraising energy in different qualities.

According to the final result of section 7.6 the value of a unit of heat would be determined as $p(1-T^*T^{-1})$, where p is the exergy price, T^* the "environmental" temperature and T the temperature

of the heat; the value of a unit volume displacement by $p(\pi-\pi^*)$, where π^* is the "environmental" pressure and π the pressure of the volume displacement.

These results are obviously open to further generalization. Choosing the general version of Gibbs' fundamental equation (5.55) as a point of departure, we would also have the following extensive properties, namely molar contents n_i, electrical charge q, extent of chemical reaction ξ, magnetic dipole moment M (cf (5.102)) etc. The discounted value to be ascribed to a mole of substance i would be $p(\mu_i-\mu_i^*)$, to a unit charge $p(\Phi-\Phi^*)$, to a unit of reaction extent $p(\nu-\nu^*)$, to a dipole moment unit $p\hat{\mu}_0(HV-H^*V^*)$ and, quite generally, $p(y_i-y_i^*)$ to a unit of extensive property x_i, where μ_i is chemical potential of substance i, Φ electrical potential, ν affinity of chemical reaction, H magnetic field density, V volume, and y_i intensive property corresponding to extensive property of kind i. The justification for this proposition would be found directly from the symmetry of the abstract model in section 5.4. Hence apart from the already available concept of *temperature-* and *pressure-discounted* prices, we arrive at the notions of a *chemical potential*-discounted price, an *electric potential*-discounted price, an *affinity*-discounted price, and so on.

Apart from these basic results, items of special interest in chapter 8 might be the distinction made between energy deliveries to service processes and the service levels as such produced by these processes. In economic theory one would usually have the volumes of commodities and services as the arguments entering into the utility function to be maximized. For our purposes it has appeared to be more useful to distinguish between the energy flows, which do not enter into the utility function directly, and the service levels, which do. This might also provide an extra stress on the fact that energy is not consumed whereas services are, and utility should be a function of consumption.

This aspect of consumption appears to be somewhat in line with Lancaster's theory of "consumption as an activity" [1966a, 1966b, 1968, pp 113-119], according to which it is not products themselves that are desired by consumers, but rather characteristics of products. Different products have different sets of characteristics, and some characteristics are common for several products. Therefore a consumption requirement concerning a certain characteristic could be satisfied by different individual products or by a combination of different products. The "volumes" of characteristics would enter into the utility function, and product volumes would enter into the budget constraint. Also there would be a need of a function (or a matrix in simplified cases) describing for each product unit how much of each characteristic this unit provides. There is obviously an analogy betwen this theory of Lancaster and the ideas applied in sections 8.2-8.3 concerning the functions $z_i(q_i)$ and in section 7.4 concerning the energy input vector $A\beta$ and output vector $B\beta$ of the service processes, where z_i is the energy requirement to produce service level q_i, the columns in A and B representing energy inputs and outputs for different unit service levels, and β representing the service levels themselves. In the arguments of the utility functions adopted are included service levels alone. Also, to generalize our models in order to cover sets of characteristics instead of singular service levels, would offer no problem.

Of the models given in chapter 8, the feedback one in section 8.4 would be of greatest generality. The conclusions from this model and the example following in the succeeding section certainly point at the intuitively correct idea that energy produced for processes needing energy of higher quality and discharging energy still having a useful remaining potential, would be more valuable, or in other words, one would be willing to pay a higher price for a commodity that can be used for at least two purposes simultaneously as compared to a commodity having a single use alone. The waste heat from radios, from light bulbs, from stoves, and

from all similar equipment, should certainly not be a resource free of charge in cases when heat is required for keeping the surrounding space at a desired temperature level. These results are also in perfect agreement with the passage taken from [Weinberg, 1978] initially referred to in section 1.2.

9.3. Large-scale energy-economic models

Let us briefly attempt to connect our theory with the type of large-scale energy-economic models that appea to occupy a predominant place in current literature on energy economics (cf e g [Häfele, 1980]) but which we up to now have not touched upon.

One highly ambitious representative of this class of models is the *Stanford Pilot Energy/Economic Model* [Dantzig, et al, 1978]. Essentially this model is a linear multi-period input/output model describing the US economy with particular emphasis on the energy sector of the economy. In its most detailed version encompassing 23 industrial sectors and eight five-year periods, it is represented by some 800 equations and 2000 variables. The 23 industrial sectors are formed as aggregates of the 87 industrial sectors included in the Leontief input/output tableau published by the Bureau of Economic Analysis. The aggregation is based on weights represented by prices in the base year 1967. The flows in the model are interpreted, in this sense, as physical flows.

The input/output table describes the requirements from different sectors in order to produce one dollar's worth in each sector. These coefficients thus reflect aggregate transformation processes of the various sectors and may vary over time according to predetermined dependences, but are independent of the flow variables themselves. Part of the net output of the industrial sectors may be accumulated as a capital formation and the remainder is used up in the form of final goods for consumption purposes. The model maximizes a utility function determined as the discounted sum of the real consumption income over the horizon.

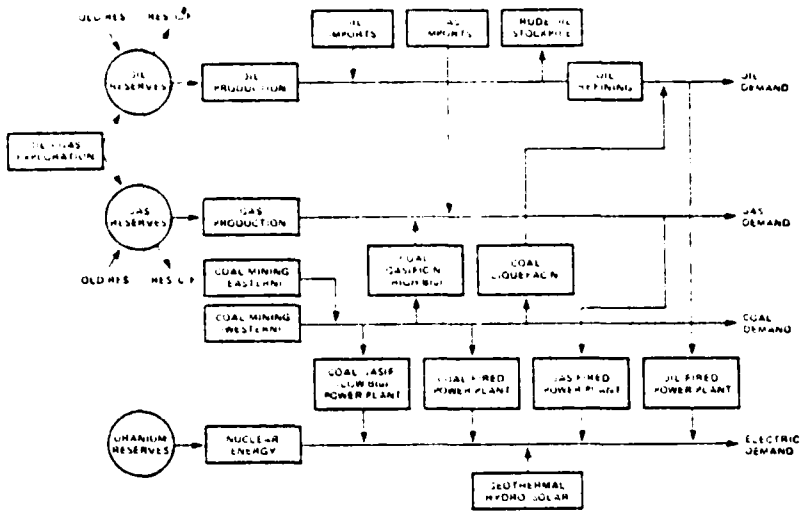

Figure 9.1. Energy sector of the Pilot Model. Figure taken from [Dantzig, et al, 1978, p 10]

The energy sector of the Pilot Model illustrated in figure 9.1 partitions the energy flows into four kinds, namely oil, gas, coal and electricity. The supplies of these are either fed into other sectors or are consumed by the population.

Although a model of this kind gives a very accurate and detailed description of essential aspects on the rôle energy-oriented factor and domestic demand flows play in the US economy, it takes no *explicit* consideration to the thermodynamic substitution availabilities and limitations in the industrial or in the domestic sectors. The very special opportunity that transformation equipment would provide in "transforming" energy of certain qualities and quantities into energy of other qualities and quantities is not analyzed explicitly, cf [ibid, p 11].

Although it might be difficult to introduce detailed thermodynamic limitations and opportunities into an aggregate model of this kind and then expect usable results having a sufficient accuracy for predictive and policy purposes, at least such considerations might prove useful for a rough estimation of the potentials that technological developments and energy conservation might have industrially and domestically and would also provide the physical

limits. In principle, it would be quite feasible to incorporate thermodynamic transformation opportunities into large-scale energy-economic models along lines similar to the basic principles described by the models in sections 7.5, 8.3 and 8.4 above.

Our conclusion is therefore that concerning models of the kinds presented in these three sections mentioned, although similar thermodynamic relationships do not appear explicitly in large-scale models of the type that the Pilot Model represents, there should be no essential obstacle preventing such relationships to be included. Whether or not this would be an improvement is, of course, an other matter.

9.4. The theory of exhaustion

A second important sector of theory related to energy economics that we have not approached so far directly, is the *theory of exhaustion*. There is a substantial amount of established and coherent research that has been carried out in this field. Important references are [Hotelling, 1931, Gordon, 1967, Smith, 1968, Cummings, Burt, 1969, Anderson, 1972, Schulze, 1974, Solow, Wan, 1976, Heal, 1976, Zimmerman, 1977, Dasgupta, Heal, 1979]. Although this theory concerns non-renewable resources in general, its current applications and interpretations often cover energy-related resources specifically.

In a typical case, the theory of exhaustion treats the problem to find an optimal rate over time regarding the extraction of one or several resources, possibly of different grades such as different mineral ores. The total stocks of these resources are limited and usually described by given numbers. The extraction rates being the negative of the time derivatives of the stocks may be restricted by capacity limits. The extracted resorce flows may enter as arguments in production functions etc. All this depends on the number of aspects one might wish to include.

Usually are given: (i) a value (a sales price) attached to the amount extracted and sold (such as a demand curve describing some inverse price-flow relationship), and (ii) an extraction cost that apart from the extraction rate itself also might depend on the cumulative amount extracted at any particular point in time (the more a mine has been excavated, the more costly a continued extraction will be). The net profits discounted over time would then form the objective function to be maximized subject to flow, stock/supply, capacity and other possible constraints.

A simple standard example of a one-resource case would be to maximize the net present value of profits V:

$$V = \int_0^T p(x,\dot{x},t)e^{-\rho t}\,dt \tag{9.1}$$

where $p(x,\dot{x},t)$ is the profit rate at t (interpreted as a net cash flow) depending on the extraction rate x and the cumulative amount extracted to date, and where ρ is the continuous interest rate and T the extraction period. This maximization would be subject to total extraction $x(T)$ being limited by total given supply and extraction rate $\dot{x}(t)$ limited to a maximum given capacity. Conditions for a maximum of V would thus be obtained by differentiating the associated Lagrangean and Hamiltonian functions using the constraints and non-negativity requirements, just as in the many thermodynamical examples investigated in our previous chapters above.

In recent research and applications the variational approach is replaced by control theory and the *maximum principle* such as in the interesting paper by Nissen and Randolph [1978] treating the extraction of hydrocarbon fuels.

In the literature dealing with the theory of exhaustion there appears to have been no explicit reference to thermodynamical considerations of the type we have dealt with in earlier chapters concerning the substitution opportunities between energy sources of different potentials etc. (In [Dasgupta, Heal, 1979, pp 208-213], the authors touch upon thermodynamical efficiency slightly.) Such relationships, however, would be included easily in certain cases. As an example we choose the penetrating work by Golabi, Scherer, et al, on questions of extracting geothermal energy [Scherer, et al, 1977, Scherer, Golabi, 1978, Golabi, Scherer, 1978]. Their basic problem concerns the recovery of heat for domestic heating purposes obtained from geothermal storages. Water is pumped out of the ground at temperature $T^{\partial}(t)$, then pumped through a heat exchanger having temperature T^{s} on its cold side, and then let back into the ground at which point its temperature has dropped to T^{i}. Back in the ground it is warmed up to $T^{\partial}(t)$ again. Depending on the distance between the resevoir in- and outlets and the flow rate Q, there is a breakthrough period after which the temperature $T^{\partial}(t)$ starts to fall. According to the authors, this time dependence is given by the sum of three exponential functions with negative arguments of the type $e^{-\psi_i \dot{Q} t}$, where the ψ_i are constants.

Introducing an energy value assumed to grow linearly with time, or alternatively, exponentially, and also various cost relationships, the net present value of the heat extracted is maximized by choosing an optimal flow rate Q, an optimal injector temperature T^{i} and an optimal life-span of the extraction process.

In the work referred to, the value of heat is assumed to be independent of its temperature and follow one of the two alternative price development functions. According to our theory, however, instead it would be the temperature-discounted price of heat, possibly inflated for second-order efficiency in the

conversion process, that would be the appropriate quantity to assign a given price or price development to. An inclusion of such a modification in the model referred to appears to be a simple task.

An evaluation over time of the value of energy extracted from a thermal or more general system of sources could also be incorporated into our models of chapter 7. This would provide a further bridge to the theory of exhaustion. A suitable objective function in a two-source case would be:

$$V = \int_0^\infty (p\dot{W} + p_1 e_1 \dot{F}_1 + p_2 e_2 \dot{F}_2)\, e^{-\rho t}\, dt \qquad (9.2)$$

where notations are the same as those of section 7.6 apart from the interest rate ρ. This function would then be maximized subject to first and second law constraints. The solution to such a problem would be slightly more involved due to the presence of the discount factor $e^{-\rho t}$. Also in this case the temperature-discounted prices will fall out of the model as important quantities. An even more complex case would be to introduce a dependence between the entropy generation rate $\dot{S}$ and the exergy extraction rate $\dot{E}$. If such a dependence were assumed to be quadratic, cf section 5.6, there would be some difficulties in obtaining a reasonably explicit solution due to the presence of this quadratic relationship. However, to obtain numerical results from specific cases ought to present no obstacle.

Let us take a final look at the intertemporal balance between exergy extraction $\dot{E}$, exergy waste (lost power) $T_0\dot{S}$ and consumption of other non-energy-related resources (in which we may include saving for future consumption, also for coming generations), and let us for simplicity use the quadratic relationship $T_0\dot{S} = \alpha\dot{E}^2$. Applying the viewpoint of a single consumer, this person

will have a utility function $u(x,y)$ (with standard properties), where x is exergy made available for services to the consumer and y the consumption of other non-energy-related commodities (including savings). A broader interpretation according to the treatment in section 8.6 is also possible. If p is the price of exergy, r the price of other commodities and $\hat{I}$ the net income available, the consumer is to maximize $u(x,y)$ subject to the two constraints:

$$p\dot{E} + ry \leq \hat{I} \tag{9.3}$$

$$x \leq \dot{E} - \chi_0 \dot{E}^2 \tag{9.4}$$

the second term in (9.4) being lost power. Assuming an internal solution (equalities in (9.3)-(9.4)), the optimal consumption x and "waste level" $T_0\dot{\hat{S}}$ will satisfy:

$$x = \frac{1 - A^2}{4\chi_0} \tag{9.5}$$

$$T_0\dot{\hat{S}} = \frac{(1-A)^2}{4\chi_0} \tag{9.6}$$

where A (≤ 1) is the abbreviation:

$$A = \frac{p}{r} \cdot \frac{\partial u}{\partial y} \Big/ \frac{\partial u}{\partial x} \tag{9.7}$$

If A is positive, i e at the optimum there is a positive marginal utility $\frac{\partial u}{\partial y}$ for the consumption of other commodities, then clearly the exergy provided for services is less than its maximum possible level $(4\chi_0)^{-1}$ and the consumption x will be in excess of waste by the amount $A(1-A)/(2\chi_0)$. Also, assuming the two marginal utilities to depend only weakly on changes in prices,

consumption will decrease quadratically in the price. Other consequences, such as the effect of an income increase, are easily derivable, but omitted. Figure 9.2 illustrates some relationships involved.

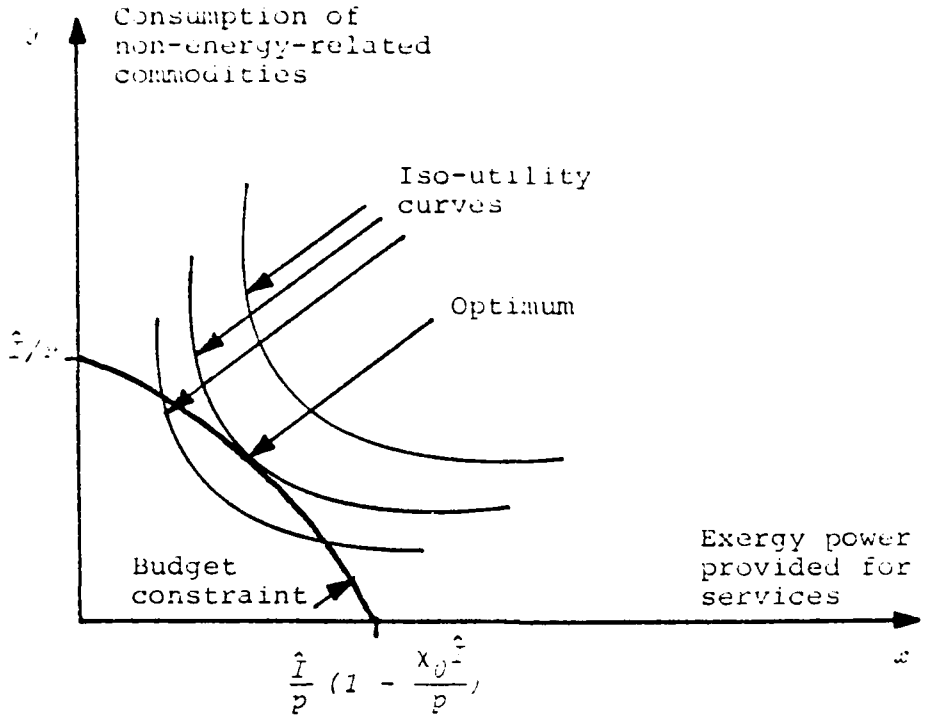

Figure 9.2. Consumption space and optimum consumption plan

This model can clearly be extended to multi-period, multi-commodity cases in which total supply constraints, capacity constraints, a discount factor etc, are included.

9.5 Thermal pollution

A third area related to energy economics is *thermal pollution*, which we only indirectly have touched upon in our preceding chapters. Thermal pollution is the effect the heat outlet from

energy transformation and utilization has on the environmental temperature. Several scientists feel that this question should be of great concern in long-run considerations regarding the technological development, two references being [Summers, 1971, Schneider, Dennett, 1975].

In essence, thermal pollution is caused by the Earth and its surrounding atmosphere having a limited heat capacity, or in other words, that our environment, at least for some time, both from an industrial and from a domestic viewpoint, is finite. The question of thermal pollution is in perfect accordance with our symmetry principle introduced in section 1.3.

There are two basic kinds of thermal pollution, one being *primary pollution* from energy transformation units interacting with the environment, the second being *secondary pollution* from all ultimate heat leakages from the industrial and domestic use of energy for space heating, for electrical appliances, for transportation, and from all other similar uses. In our models of chapters 7-8, examples of primary pollution are the flows q_i in section 7.3 (figure 7.2) and z_{kio} in section 7.5 (figure 7.3), and of secondary pollution the flows z_{ijo} in section 8.3 (figure 8.1) and x_j in section 8.5 ($x_j=-\beta_j$ in figure 8.4).

Thermal pollution is expected to have severe adverse effects on the climatic balances of the Earth concerning not only the melting of ice in polar regions but also on sea currents, winds and clouds, in their turn distorting the radiative balance, these effects causing ecological disturbances of many different kinds. Also fossil-fuel plants cause an increase in the atmosphere of carbon dioxide (and other pollutants) which affects the absorptivity of the atmosphere and thereby the radiative balance of the Earth. Both thermal outlet and other pollution are entropy creating as argued in chapter 2.

According to some authors one should make a distinction between what they call "natural" energy sources (solar, wind, water) and "unnatural" sources (fossil-fuels, nuclear, fusion). In their view, extracting power from natural sources would be performed by "invariant" energy systems, i e systems not adding to the heat load of the biosphere.

It is not clear to the author that this statement necessarily is true. Consequences of power extraction from water and wind potentials appear to be extremely difficult to derive. Therefore we limit our attention to a brief comparison between a schematic fossil-fuel plant and a similar solar energy plant as they have been modelled in sections 7.3 and 6.5. It is of course quite true that secondary thermal pollution, in a short-run perspective, would not coincide with the amount of power supplied, since a certain portion would be transformed into potential energy and other energy forms still possessing an exergy potential, for instance for contruction work etc. However, in the short run this remaining potential would presumably account for a very limited amount in relative terms, and in the long run, when buildings are pulled down etc, for a negligable amount. Therefore, in this brief discussion, we disregard any residual exergy storage. Figure 9.3 illustrates the flows involved.

Let us use the following designations. In the fossil-fuel system energy is provided as a heat flow of temperature T_1 from burning fuels, this heat being transformed into electrical power W by means of a heat engine (and a generator), the overall thermal efficiency assumed to be η_1. The primary heat load delivered to the environment is then $W(\eta_1^{-1}-1)$ and the secondary load from using W is W. Therefore the total pollution will be $Q^*_{1tot} = W\eta_1^{-1}$ in order to provide the power W. In the solar energy system incoming radiation amounts to $\hat{R}A$ where $\hat{R}$ is the radiancy and A the reflector area, of which $\sigma a \varepsilon T_2^4$ is reemitted (assuming a grey collector), and where ε is the emissivity, a collector area, T_2 collector

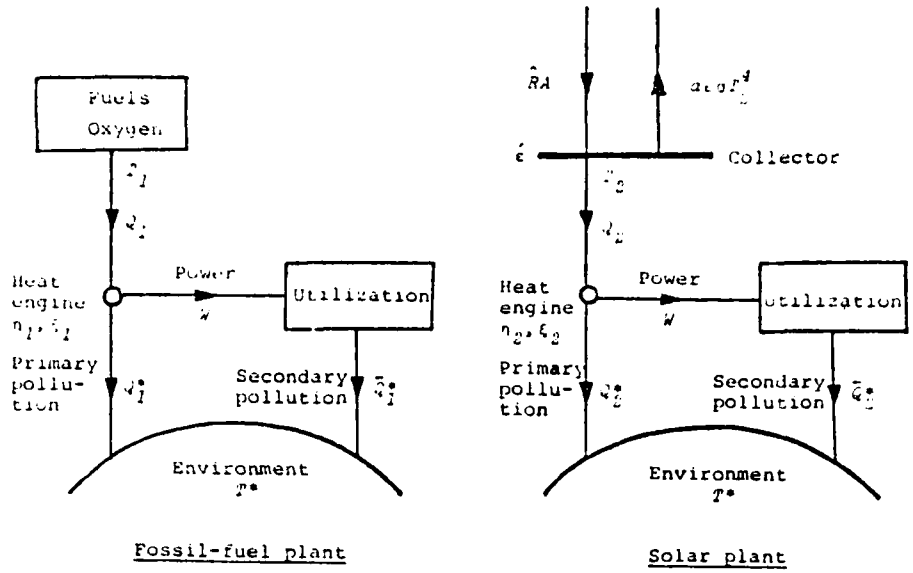

Figure 9.3. Energy flows pertaining to two schematic systems compared

temperature and σ Stefan-Bolzmann's constant. Assuming the collector is connected to a heat engine with thermal efficiency η_2, the primary heat load will be $(1-\eta_2)\varepsilon(\hat{R}A-\sigma a T_2^4)=W(\eta_2^{-1}-1)$, and the secondary load W, where W is the power extracted which eventually will dissipate into the environment as heat. The total thermal pollution is therefore $W\eta_2^{-1}$.

Now, if both heat engines have similar thermal efficiencies, the thermal pollution per power unit extracted will be the same in both cases, viz $\eta_1^{-1}=\eta_2^{-1}$. If the solar energy system is to produce a lower total heat load, then obviously we must have $\eta_1<\eta_2$, i e a thermally more efficient engine. The same applies, when primary pollution only is considered. The question of thermal pollution thus appears to be more of a question of conversion efficiency than of the choice of source.

If we take a second-law viewpoint, instead of using thermal efficiencies, the total heat load from the fossil-fuel system may be written $Q^*_{1tot}=W\xi_1^{-1}(1-T^*T_1^{-1})^{-1}$ and for the solar energy

system $Q^*_{2,1,1} = W\xi_2^{-1}(1-T^*T_2^{-1})^{-1}$, where $\xi_1 = WQ_1^{-1}(1-T^*T_1^{-1})^{-1}$ is the exergy efficiency of the heat engine applied to the fossil-fuel plant and ξ_2 the similar efficiency of the solar energy heat engine. Also from this point of view, the heat load per power unit extracted $\xi_1^{-1}(1-T^*T_1^{-1})^{-1}$ and $\xi_2^{-1}(1-T^*T_2^{-1})^{-1}$ respectively, depend on the efficiencies involved, but now also on the source temperatures T_1 and T_2. For equal efficiencies, obviously a higher temperature provides a lower pollution and vice versa. Thus it would be quite possible that the fossil-fuel plant would be preferable from this point of view. In any case, it appears as if none of the two plants should be called "invariant".

The case of comparison given above has concerned fossil-fuel versus solar energy. Analyzing effects of water or wind power would be more involved, no doubt, but would appear to provide similar results.

Since thermal pollution in itself is undesirable, it might be of interest to inquire into the effects of attaching a cost to a heat outlet. Taking a simplified version (with no domestic heat supply) of the model in section 7.3 and assuming a given electricity demand function $p(W)$, we may study the monopolistic problem of maximizing V:

$$V = p(W)W - p_1Q_1 \tag{9.8}$$

where Q_1 is the input heat provided (assumed to be equal to the total thermal load) and p_1 the price of this heat, possibly including a "penalty" of pollution, subject to a given second-order constraint. A straight forward differentiation of V yields the optimality condition:

$$\frac{\bar{p}_1}{p\xi} = 1 + e^{-1} \tag{9.9}$$

where e is the price elasticity $(\frac{dW}{dp_1} W)^{-1} p$ of the demand curve and $\bar{p}_1$ the temperature-discounted price of the energy input. A total differentiation of the parameters $\bar{p}_1$ and ξ, assuming e to be constant gives us:

$$\frac{\delta W}{W} = e\left(\frac{\delta \bar{p}_1}{\bar{p}_1} - \frac{\delta \xi}{\xi}\right) \tag{9.10}$$

$$\frac{\delta Q_1}{Q_1} = \frac{\delta \bar{p}_1}{\bar{p}_1} - (1+e)\frac{\delta \xi}{\xi} \tag{9.11}$$

Hence a relative change in the discounted input price $\bar{p}_1$ by some percentage, will change both the electricity demand and the total heat load by the product of the same percentage and the price elasticity. On the other hand, assuming the standard case with $e < 0$, will a relative improvement in the second-order efficiency by some percentage increase the power demand by this percentage multiplied by the absolute value of the elasticity, whereas for an inelastic demand $(-1 < e < 0)$ the heat load will diminish and for an elastic demand $(e < -1)$ it will increase. A number of additional considerations along similar lines would be straight forward to make, but are omitted.

9.6. Aspects on applications in practice

The title of this work "Towards a theoretical basis for energy economics" indicates on the one hand that the objectives have been theoretical, i e to provide propositions concerning relationships having a high level of generality and therefore applicable to wide, but average, sets of circumstances and phenomena, and on the other that the theoretical modelling carried out by no means is complete, rather the contrary; more questions seem to have been stated than answered. There would appear to be ample space for future research in a number of different directions.

Although the goals have been theoretical, a few aspects for the practical implementation of the ideas presented will be given in this section.

The main ideas given in the previous chapters have led to the introduction of discounted prices which were shown to be of relevance when determining the economic value of energy in different forms. Real prices are determined at the market place, whether this would be an organized market such as a stock exchange or instead a two-person bilateral monopoly situation in which two parties negotiate on some business deal. In general, prices are thus formed in a real-world system and do not come out of paper work. However, there are a number of instances in which more or less theoretical computations affect the price formation process. One such class of cases is when theoretical derivations form the basis for giving a bid offering the price of a project etc; an other when legislation influences the price mechanism such as determining a ceiling for the price of electrical utilities, or the price of gasoline in a shortage situation, or when taxes have a substantial impact on the value of a transaction (real estate etc), taxes essentially being determined from theoretical assumptions. However, there is also at least one more important case and that it when the theoretical considerations provide a source of knowledge to the selling and/or purchasing party involved in such a way that this information influences their behaviour as regards bids and counterbids, and/or their evaluation of the values involved in the commodity to be traded.

In our case, it appears that this third class of circumstances would be the most appropriate way in which our theoretical results might be applicable. Knowing of the second law, a person would not be equally interested in paying the price of electricity for some delivery of *400 K* steam. If he is in possession of bidding power, he would have an instrument for arguing for a considerably lower price. Knowledge of discounted prices as theoretical limits

for the relative values of energy (as compared to exergy) would certainly influence the price formation process if a sufficiently high proportion of the population were aware of the thermodynamical elements sufficient for understanding this concept, assuming regulatory agencies would have no objections.

When comparing energy prices, not only should they be discounted but also inflated for second-order efficiencies according to the models in sections 7.5 and 8.3, i e the relevant measure of comparison should be $\bar{p}\xi^{-1}$, where $\bar{p}$ is the discounted price and ξ the second-order efficiency. If the discounted energy input price for some kind of energy is low (compared to a second alternative), the efficiency-inflated price might still be high when it represents an inefficient conversion process (low ξ), which means that one would be willing to pay a relatively high price for an alternative energy source. Electrical resistance heating, for instance, has a very low ξ-value, in the vicinity of $\xi_1 = 0.03$ (cf table 3.1) and the input temperature is high $T_1 = \infty$. If the price of electricity including operating expenses is \$ 0.04 per watt, we obtain a ratio amounting to $\bar{p}_1\xi_1^{-1} = 1.33$ c/W. A heat pump with a heating ratio of $\sigma = 3$, cf (3.16), might provide space heat at a cost of 16c/W of input electricity and would have a second-order efficiency of $\xi_2 = 0.19$ (environment temperature -2 °C, indoor temperature + 20 °C). The ratio of the discounted price and the second-order efficiency would then be $\bar{p}_2\xi_2^{-1} = 1.13$ c/W for this equipment, which is not competitive. However, if the price dropped below 12 c/W or the efficiency were improved beyond $\xi_2 = 0.12$ (or some combination of price drop and efficiency improvement), it would be the competitive alternative. It might be noted also that second-order improvements decrease the ratio at a degressive rate since the efficiency measure is placed in the denominator.

The area to which the concept of discounted prices would be applicable most easily, quite naturally would be processes in which

temperature is the important characteristic and this temperature is not too significantly far away from the environmental temperature. In [Ford, et al, 1975] a number of practical temperature-dependent processes are discussed from a second-order point of view as well as many other types of processes involving other intensive properties than temperature alone. Domestic applications cover space heating, refridgeration, air-conditioning, cooking, and industrial applications cover combined processes, solar/chemical energy conversion, among many other examples, also including a penetrating analysis of combustion processes. It appears quite feasible to apply economic reasoning of the kind presented above to the many examples included in this reference.

A special practical problem in an energy-economic system is the question of smoothing the production of and demand for electricity over the day/night cycle and over different seasons of the year. This problem has its roots on the demand side in periodical annual environmental temperature patterns and dayly similar work/leisure/sleeping habits and routines. On the production side, there are usually large economies of scale, requiring that plants be built with high capacity and therefore operating with high fixed costs and low variable costs. Equalling out the possible differences between supply and demand can be carried out either by making the capacity more flexible (introducing, for instance, marginal gas turbines) or by smoothing out the variations in demand (for instance, by means of peak-load pricing combined with energy storage systems). Also windmill electricity generation etc depending on stochastic properties of the energy source, create the need for energy buffers for equalization purposes.

The topics of peak-load pricing, energy storage systems, electricity demand patterns etc, fall outside of the scope of this work. There are of course, quite naturally, a number of items bridging the fields. Climatic variations during the year in one region, for instance, changes the exergy rate necessary for providing a

comfortable indoor temperature. The closer the outdoor and desired indoor temperature, the less exergy need be consumed. Supply and demand relationships of exergy rather than energy, substitution opportunities etc, would be a challenging field to continue in to.

9.7. Towards a general theory

In this concluding section let us round off our treatment by introducing some more or less speculative ideas on what directions in which a general theory might be developed. Economic theory and thermodynamics in its broad sense have a number of basic categories in common. Both sciences are concerned with transformations of various kinds, both are concerned with information, and so on. Thermodynamics provides us with relationships as to the physical limitations of what is possible to achieve; economics treats questions of how people and firms would or should act when faced with such limitations, and if they act in that way, what the consequences would be.

A brief summary of some basic concepts of economic theory is the following. There is some set of commodities or products (including goods as well as services and labour of different skills). This set may include products in existence, products on their blueprint stage, products not yet invented, as well as products that could be in existence in the future, but never will be produced, and products that could be developed but never will be manufactured. Assuming this set to be large but finite and the number of products equal to n and that all volumes (flows etc) of products are infinitely divisible, we may envisage an abstract *commodity space* Γ erected by one real-valued coordinate axis for each product. For mathematical convenience it is suitable to use both the positive and negative coordinates of the axes depending on the direction of the product flow to be described according to some convention adopted for different cases. A point in commodity space will thus be given by an n-dimensional vector of positive and/or

negative real numbers. According to one general definition of commodity space [Debreu, 1959], the same kind of product at different dates or at different locations is a different product (assuming a large but finite number of possible locations and a similar number of possible dates). Products are either *manufactured*, in simple cases provided as *labour* by man, or available as *natural resources*.

Basically there are two sets of economic agents, viz *producers* and *consumers*. A producer represents a set of transformation opportunities, from product flows (goods, services, labour, natural resources) into other product flows. We choose the convention that output flows are given by positive numbers and input flows by negative numbers. A point (vector) y_j in commodity space for the jth producer is either feasible, i e the outputs in question are possible to obtain from the inputs, or it is infeasible. The set of all feasible points y_j form a subset of Γ denoted Y_j, called the jth *production set*. The total production opportunities of all producers as a collective is determined as the set $Y = \sum_j Y_j = \{y = \sum_j y_j \mid y_j \in Y_j, \text{ all } j\}$, i e the set of vectors of net inputs and outputs, when all individual production vectors belong to their respective feasible production sets. Y is called the *total production set*.

For each consumer a consumption set is defined analogously. The state of the ith consumer is represented by a *consumption vector* x_i which either is feasible or infeasible. By convention input flows of goods to be consumed are defined as positive numbers and output flows (such as labour) as negative numbers. An infeasible vector would be obtained in a case, for instance, when the input of nourishment would not suffice to provide the labour described by the vector. The set of feasible consumption vectors x_i constitutes the ith *consumption set* X_i, which also is a subset of Γ. The set formed as the sum of all consumption sets

$x = (x_1, \ldots, x_n) = \sum_i x_i^1 + x_i^2$, $x_i^1 \in X_i$, is called the total consumption set. Also the given resources are defined by a vector in commodity space. The components of this vector ω are nonnegative.

If given a total consumption vector x, a total production vector y and the resource vector ω, the vector $z = x - y - \omega$ will describe the net input (net demand) of the economy as a whole. If x and y both are made up of sums of feasible vectors and all components of z are nonpositive, then the corresponding state of the economy is *attainable*. This means that the resources, the produced volumes and the labour etc supplied by the consumers, suffice as inputs to the consumers and producers to yield these supplies.

A number of standard assumptions on the production and consumption sets are usually stated, three important ones for Y_j being:

(i) Y_j is *convex*, i e that if y_j' and y_j'' both are feasible, then so is any positively weighted average of them $\alpha y_j' + (1-\alpha) y_j''$, where $0 \leq \alpha \leq 1$. If inactivity is possible, $0 \in Y_j$, then convexity implies nonincreasing returns to scale.

(ii) $\Omega \subset Y_j$, where Ω is the negative orthant, i e the set of all vectors having nonpositive components throughout. This is an assumption of *free disposal*, since for any nonzero input one may always have a zero output.

(iii) $Y_j \cap -Y_j \subset \{0\}$, which means that if y_j is feasible then $-y_j$ is not, except if $y_j = 0$ were feasible. This is an assumption of *irreversibility*; the direction of input and output flows cannot be reversed.

The characteristics of the X_i and the Y_j are technical (or possibly biological) in nature and have no direct economic meaning.

AD-A104 628 NAVAL POSTGRADUATE SCHOOL MONTEREY CA F/G 5/3
TOWARDS A THEORETICAL BASIS FOR ENERGY ECONOMICS.(U)
AUG 80 R W GRUBBSTROM
UNCLASSIFIED NPS-54-80-015 NL

4 OF 4

END
DATE
FILMED
10-81
DTIC

In order to describe the tastes of consumers *preference preorderings* are introduced on the sets X_i. Such an ordering would be complete, transitive and reflexive, meaning that all alternatives $x_i \in X_i$ can be compared with one another along a preference scale. The preference preorderings are closely related to the utility concept, and if certain conditions for the preorderings are satisfied, the existence of a *utility function* ranking the various alternatives may be proven [Debreu, 1959, pp 56-59]. For the economy as a whole one consumption alternative x'' is preferred to a second x', if a change from x' to x'' has the consequence that no utility function decreases and at least one increases (the *Pareto-optimality criterion*).

A *price system* is an n-dimensional vector of nonnegative numbers (prices) describing the economic value of each commodity. The *profits* of the jth producer may be written py_j interpreting p as a row vector and y_j as a column vector, and the (net) *expenditure* of the ith consumer similarly as px_i. The producers (firms) are assumed to be owned by the consumers according to predetermined shares, Θ_{ij} being the share of producer j owned by consumer i, and the profits are distributed to the consumers according to these shares; $\sum_j \Theta_{ij}\, py_j$ credited to consumer i.

Also the resources are assumed to be distributed among the consumers according to some predetermined rule $\omega = \sum_i \omega_i$, where ω_i is the vector of resources owned by consumer i.

The *wealth constraint* of each consumer is given by $px_i \leq \sum_j \Theta_{ij} py_j + p\omega_i$, requiring that the net expenditure may not exceed the unearned income for each individual consumer.

Consumers and producers are assumed to behave as follows. If given a price system p, the resource vectors ω_i and profit distributions Θ_{ij}, each consumer attempts to choose an $x_i \in X_i$ that maximizes

his utility function. The resulting consumption vector x then describes volumes of commodities to be consumed and volumes of services to be provided from the consumers collectively. Given the same price system, each producer attempts to choose a $y_j \in Y_j$ that maximizes his profits. The resulting production vector describes the desired output and input levels of all commodities for the producers as a whole. The difference $x - y - \omega$ is the *excess demand*. A positive excess demand for a certain product would tend to increase the corresponding price and vice versa by means of some bidding process, the *market mechanism*.

A *market equilibrium* obtains when $y + \omega = x$. An *equilibrium of the economy* is given by an array of vectors x_1^*, x_2^*, ..., y_1^*, y_2^*, ..., p^*, where the x_i^* and y_j^* are feasible, where all consumers maximize their utility subject to their resulting wealth constraints, and where the x_i^* and y_j^* satisfy the market equilibrium condition.

An *optimum of the economy* is obtained at a state which is attainable, and no other attainable state exists giving at least one consumer a higher utility value and all others no lower values.

Under certain assumptions on the sets X_i and Y_j one may prove that *an optimum is an equilibrium relative to a price system*, and vice versa, where an equilibrium relative to a price system, loosely speaking, means an equilibrium in which the individual resources ω_i and shares Θ_{ij} are not necessarily specified [Debreu, 1959, pp 93-94].

It would go far beyond the aims of this work to attempt to analyze all concepts referred to above in terms of thermodynamics. Let us only point at a few possibilities.

In the models of our previous chapters, the items traded have been heat, work and in a couple of cases volume displacements.

These energy-oriented quantities have therefore implicitly been understood as to be the commodities transferred. Generalizing this idea from a thermodynamical standpoint would extend this class also to *matter*, since heat, work and matter are the three entities that can be exchanged between elements of a thermodynamic system.

From the point of view of economics the concept of a commodity often would be interpreted as some system possessing certain characteristics, such as material contents, structure, volume etc. Some product properties would be easily interpretable in thermodynamic terms, such as weight, whereas others would be more difficult to translate (such as a *tasteful* painting). Although a product may be defined by its physical properties, the way in which this product interacts with its possessor must be described in psychological terms. Making a distinction between these different sets of characteristics would be in correspondence with Lancaster's theory of "consumption as an activity" previously referred to in section 9.2. In any case, it appears to be an extremely difficult task to interpret the way in which products interact with their user in thermodynamic or information-theoretic terms. Certain basic products, such as food to be consumed in order to restore biological tissues, might be more amenable for analysis along such lines.

In an overwhelming majority of cases of production, the product output has a more complex structure than its input components. This would indicate that an entropy decrease of subsystems of the Universe often is a desirable objective. In few cases, on the other hand, product outputs are equalized mixes of inputs, such as in tinted paint or blended tobacco. Under these circumstances there obviously is a desired entropy increase. On the whole, however, production processes would be purifying resulting in entropy decreases. From the second law, this must mean that in some other part of the Universe, there must be a compensatory

entropy increase of more than the decrease. This might manifest itself in various forms of pollution: heat, chemical pollution, smoke and other waste products. There is thus a lower physical bound for such a contamination for any production involving an entropy decrease.

Product development work, by which the physical properties of the products are simplified whilst their functional performance remains (or maybe is improved) is an example in which the entropy differential of the product may diminish giving an opportunity to create less entropy in the dual process. If fewer screws are needed in the improved product version, fewer holes are drilled, less energy is needed and less dissipated into the environment, less waste material is turned out, etc.

Using products, either for direct consumption or for a longer wear and tear period, depreciates the product, and in general would correspond to an entropy increase. Consumption, apart from the build-up of biological tissues or memorizing pleasant information when reading a good book etc, could therefore be expected to be associated with entropy increases. Unfortunately there is no law requiring any compensatory decrease elsewhere.

Resources is a term common to economics and thermodynamics. A resource such as the exergy potential of a geothermal resevoir or the presence of a mineral ore, would be simple to interpret in either discipline. However, *human resources* in the form of knowledge, know-how, skills etc, which often are described just as an additional production factor in the economic context, would be just as difficult to analyze from a thermodynamic point of view as the consumption of a novel. An increased productivity due to, for instance, developing better work methods, would be described as a displacement of the surface boundary of the production set Y_j. From a thermodynamic point of view, the interaction

between the individual engineering the production process and the process itself would be extremely complex to analyze, even in a simplest possible case.

Let us consider the following transformation process interpreted as a production. There are M kinds of factors that may be transformed into N kinds of products. Viewing the factors as subsystems of the Universe and the products in a similar way, before the transformation we have M subsystems and an environment, and after the transformation we have N other subsystems and an environment. Assume that we use y'_j units of factor j, which has an internal energy of u'_j per unit and other extensive properties x'_{ij}, $i = 1, 2, \ldots$, also per factor unit, that the number of products of kind k obtained are y''_k and that their unit internal energy and other extensive properties are given by u''_k and x''_{ik}, $i = 1, 2, \ldots$, according to section 5.4. We would then have the balances:

$$\sum_{j=1}^{M} y'_j u'_j + U'_0 = \sum_{k=1}^{N} y''_k u''_k + U''_0 \tag{9.12}$$

$$\sum_{j=1}^{M} y'_j x'_{ij} + X'_{i0} + \hat{X}_i = \sum_{k=1}^{N} y''_k x''_{ik} + X''_{i0}, \quad i = 1, 2, \ldots \tag{9.13}$$

where U'_0 is the internal energy of the Universe apart from the factors before the transformation, and U''_0 apart from the products after the transformation, X'_{i0} other extensive property i of the environment before and X''_{i0} after, and $\hat{X}_i$ a term describing the possible autonomous change of the supply of extensive property i. With i representing entropy, $\hat{X}_i > 0$ describes the entropy generation taking place during the process. In a typical production case with index i referring to entropy, the first term in the left-hand member of (9.13) would be greater than the first term in the right-hand member, since the products would have a lower entropy than

the factors. In such a case we would have $X''_{i0} > X'_{i0} + \hat{X}_i$, meaning that the environmental entropy has increased during the process by more than the entropy generation, just as discussed above.

Let us assume that all x'_{ij} and x''_{ik} are positive constants and that the energy balance equation always can be satisfied by exchanging heat and/or work. The left-hand member of (9.13) represents the "supply" of extensive property i. Since the residual X''_{i0} cannot be negative, the different opportunities to manufacture products, given the factor supplies, must satisfy:

$$A_i - \sum_{k=1}^{N} y''_k \, x''_{ik} \geq 0 \, , \qquad i = 1, 2, \ldots \tag{9.14}$$

where A_i is the (fixed) left-hand member of (9.13). The arrays of y''_k satisfying this inequality obviously form a convex subspace, see figure 9.4(a).

If instead the product volumes are fixed, the factor volumes will have to obey inequalities of the kind:

$$\sum_{j=1}^{M} y'_j \, x'_{ij} - B_i \geq 0 \, , \qquad i = 1, 2, \ldots \tag{9.15}$$

These inequalities are illustrated in figure 9.4(b). In the (c)-section of the figure the case is illustrated, when all variables except one factor volume and one product volume are kept constant.

It is clear from figure 9.4 that the usual standard properties of production functions come out of the inequalities, such as the production opportunity curve (thick line in (a)) being concave (at least not convex), the isoquant (thick line in (b)) being convex, and the total product curve (thick line in (c)) showing decreasing marginal returns when the single factor volume increases.

If the number of inequalities is very large, one might expect each broken boundary curve to approach a smoother curve. For instance, if the index i is replaced by a continuous parameter φ representing a polar coordinate angle, then the set of inequalities given by:

$$y_1'' \cos \varphi + y_2'' \sin \varphi \leq R \,, \qquad all\ \varphi,\ 0 \leq \varphi \leq \pi/2$$

where R is constant, as a boundary curve will have a circular arc with radius R.

The term $\hat{X}_i$ when it represents entropy generation, should not be misinterpreted as a resource increasing the opportunity to choose higher values of the y_k'' more freely, since at least in the standard production case this entropy is absorbed by the environment in the term X_{i0}''.

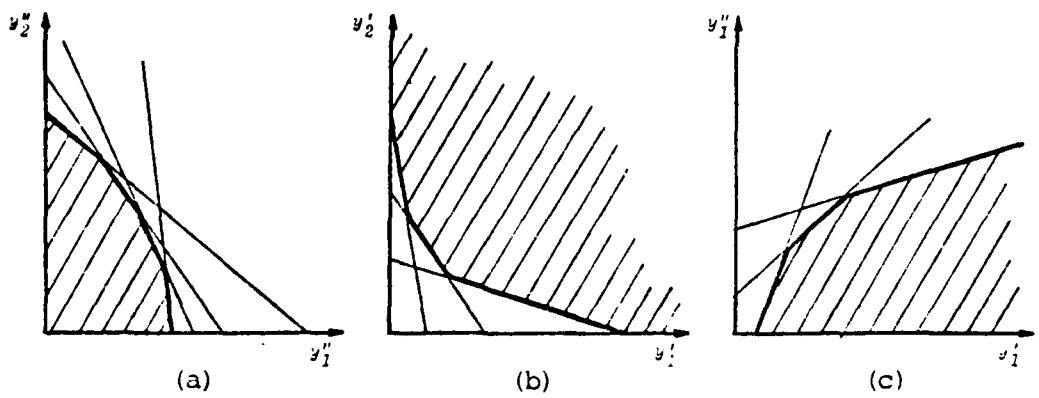

Figure 9.4. (a) Production opportunities for given factor volumes. (b) Factor substitution opportunities for given product volumes. (c) One product total product curve for different supplies of single factor

The previous discussion has indicated that there might be some interesting relationships to be found when taking thermodynamical

constraints into account and introducing them into the economic context. In the case treated, it is clear that the two disciplines are consistent as regards convexity properties of transformation opportunities. Other properties, in particular the assumptions on free disposal and irreversibility, would be interesting to examine in detail. Of perhaps even more interest would be to investigate properties of utility functions, since these functions or, equivalently, their corresponding preference preorderings, form the basis from which economic theory derives the economic values of commodities. This and many other questions are left for the future.

REFERENCES

Abbot, M M, Van Ness, H C, Thermodynamics, Schaum, New York 1972

Abramson, N, Information Theory and Coding, McGraw-Hill, New York 1963

Ahearn, J E, Coming to Terms, Mechanical Engineering, Vol 97, 1975, p 54

Anderson, K P, Optimal Growth When the Stock of Resources is Finite and Depletable, Journal of Economic Theory, Vol 4, 1972, pp 256-267

Andersson, L, Uppsats om energi och entropi, Styrelsen för teknisk utveckling, Stockholm, September 9, 1977

Andresen, B, Berry, R S, Nitzan, A, Salamon, P, Thermodynamics in Finite Time. I. The Step-Carnot Cycle, Physical Review A, Vol 15, 1977, pp 2086-2093

Arumi, F N, Entropy and Demography, Nature, Vol 243, 1973, pp 497-499

Baehr, H D, Energie und Exergie, VDI-Verlag, Düsseldorf 1965

Bell, C R, Solar Energy. Task Progress Report, Research Memorandum, RM-77-20, IIASA, Laxenburg, May 1977

Berchthold, M, Exergie: die Qualität der Energie, Schweizerische Technische Zeitschrift, No 37/38, September 1977

Berg, C A, A Technical Basis for Energy Conservation, Mechanical Engineering Science, Vol 96, 1974, pp 30-42

Bergson, H, Time and Free Will, Harper, New York 1960

Berry, R S, Recycling, Thermodynamics and Environmental Thrift, Bulletin of the Atomic Scientists, Vol 9, 1972, pp 8-15

Berry, R S, Fels, M F, The Energy Cost of Automobiles, Bulletin of the Atomic Scientists, December 1973, pp 11-60

Berry, R S, Salamon, P, Heal, G, On a Relation Between Economic and Thermodynamic Optima, Resources and Energy, Vol 1, 1978, pp 125-137

Blackburn, T R, Information and the Ecology of Scholars, Science, Vol 181, 1971, pp 1141-1146

Borel, L, Energy, Economics and Exergy - Comparison of Different Heating Systems Based on the Theory of Exergy in Camatini, E, Kester, T, (Eds), Heat Pumps and Their Contribution to Energy Conservation, NATO Advanced Studies Institute Series E: Applied Science, No 15, Nordhoff, Leyden 1976, pp 51-96

Brillouin, L, Thermodynamics and Information Theory, American Scientist, Vol 38, 1950, pp 594-599

Brillouin, L, Science and Information Theory, Academic Press, New York, 1962

Brown, H, Human Materials Production as a Process in the Biosphere, Scientific American, September 1970, pp 195-203

Brown, H, Energy in Our Future, Annual Review of Energy, Vol 1, 1976, pp 1-36

Brown, L R, Human Food Production as a Process in the Biosphere, Scientific American, September 1970, pp 161-170

Campbell, I M, Energy and the Atmosphere, Wiley, New York 1977

Cottrell, F, Energy and Society, McGraw-Hill, New York 1955

Crick, F H C, Of Molecules and Men, University of Washington Press, Seattle 1967

Cummings R C, Burt, O R, The Economics of Production from Natural Resources: Note, American Economic Review, Vol 59, 1969, pp 985-990

Dantzig, G B, Connolly, T J, Parikh, S C, Stanford Pilot Energy/Economic Model, EPRI EA-626, Electric Power Research Institute, Palo Alto, May 1978

Darrieus, G, The Rational Definition of Steam Turbine Efficiencies, Engineering, Vol 130, 1930, pp 283-285

Dasgupta, P S, Heal, G M, Economic Theory and Exhaustible Resources, Cambridge University Press, Cambridge 1979

Debreu, G, Theory of Value, Wiley, New York 1959

Donnan, F G, Guggenheim, E A, Activities of Life and the Second Law of Thermodynamics, Nature, Vol 133, 1934, pp 99, 133, 869, Vol 134, 1934, p 255

Eberstål, K, Entropifunktionens användning vid aggregering - en förstudie, Report LiTH-MAT-R-79-16, Linköping Institute of Technology, Linköping 1979

Eddington, Sir Arthur, The Nature of the Physical World, Michigan University Press, Ann Arbor 1958

Energy Analysis, IFIAS, Report No 6, Stockholm 1974

Energy Analysis and Economics, IFIAS, Report No 9, Stockholm 1975

English, J M, Some Fundamental Relationships Between Energy Use and Economic Activity, Proceedings, ASEE Annual Conference, 1979

Eriksson, B, Eriksson, K E, Olsson, K, Wall, G, Exergin - den nyttiga energin, Svenska Dagbladet, December 6, 1975

Eriksson, B, Eriksson, K E, Olsson, K, Wall, G, Towards an Integrated Accounting of Energy and Other Natural Resources, Institute of Theoretical Physics, Chalmers University of Technology, Gothenburg, March 1976

Eriksson, B, Eriksson, K E, Wall, G, Basic Thermodynamics of Energy Conversions and Energy Use, Institute of Theoretical Physics, Chalmers University of Technology, Gothenburg, January 1978

Erlander, S, Entropy in Linear Programs - An Approach to Planning, Report LiTH-MAT-R-77-3, Linköping Institute of Technology, Linköping 1977

Erlander, S, Optimal Spatial Interaction and the Gravity Model, Springer, Berlin 1980

Evans, R B, A Proof that Essergy is the Only Consistent Measure of Potential Work, Thesis, Dartmouth College, Hanover, New Hampshire, 1969, (Xerox University Microfilms, Ann Arbor 1974)

Faires, V M, Applied Thermodynamics, Macmillan, New York 1947

Fiske, M D, Havens, W W, Jr, Physics and the Energy Problem, AIP Conference Proceedings No 19, American Institue of Physics, New York 1974

Ford, K W, et al, (Eds), Efficient Use of Energy, AIP Conference Proceedings No 25, American Institute of Physics, New York 1975

Fowles, G R, Introduction to Modern Optics, Holt, Rinehart and Winston, New York 1975

Fratzscher, W, Zum Begriff des exergetischen Wirkunggrads, Brennstoff-Wärme-Kraft, Vol 13, 1961, pp 486-493

Fratzscher, W, Gruhn, G, Die Bedeutung und Bestimmung des Umgebungszustands für exergetische Untersuchungen, Brennstoff-Wärme-Kraft, Vol 17, 1965, pp 337-341

Gašparović, N, Schriftum über Exergie, Brennstoff-Wärme-Kraft, Vol 13, 1961, pp 502-509

Georgescu-Roegen, N, The Entropy Law and the Economic Process, Harvard University Press, Cambridge, Mass, 1971

Gibbs, J W, A Method of Geometrical Representation of the Thermodynamic Properties of Substances by Means of Surfaces, (1873), in The Scientific Papers of J Willard Gibbs, Vol I, Longmans, New York 1906

Gibbs, J W, On the Equilibrium of Heterogeneous Substances, (1875-1878), in The Scientific Papers of J Willard Gibbs, Vol I, Longmans, New York 1906

Gibbs, J W, On an Alleged Exception to the Second Law of Thermodynamics, (1883), in The Scientific Papers of J Willard Gibbs, Vol I, Longmans, New York 1906

Gilliland, M W, Energy Analysis and Public Policy, Science, Vol 189, 1975, pp 1051-1056

Golabi, K, Scherer, C R, Management of a Geothermal Resevoir, Presentation, ORSA/TIMS National Meeting, Los Angeles, November 1978

Gordon, R L, A Reinterpretation of the Pure Theory of Exhaustion, Journal of Political Economy, Vol 7, 1967, pp 274-286

Grassmann, P, Energie und Exergie, Brennstoff-Wärme-Kraft, Vol 13, 1961, pp 482-486

Grubbström, R W, Det ekonomiska värdet av energi i olika former, Research Report No 54, Department of Production Economics, Linköping Institute of Technology, Linköping November 1979

Grubbström, R W, Lundquist, J, Theory of Relatively Closed Systems and Applications, Production-Economic Research in Linköping (PROFIL), Linköping 1975

Grümm, H-R, Thermal Radiation and Entropy, Research Memorandum RM-78-2, IIASA, Laxenburg

Grünbaum, A, Philosophical Problems of Space and Time, Alfred A Knopf, New York 1963

Häfele, W, (Ed), Modelling of Large-Scale Energy Systems, IIASA/IFAC Symposium, February 25-29, 1980, Pergamon Press, Oxford 1980

Haywood, R W, A Critical Review of the Theorems of Thermodynamic Availability, with Concise Formulations, Journal of Mechanical Engineering Science, Vol 16, 1974, pp 160-173, 1975, pp 258-267

Heal, G, The Relationship between Price and Extraction Cost for a Resource with a Backstop Technology, Bell Journal of Economics, Vol 7, 1976, pp 371-378

Hellman, H, Energy in the World of the Future, M Evans and Co, New York 1973

Holman, J P, Thermodynamics, McGraw-Hill,New York 1969

Holmes, J, (Ed), Energy, Environment, Productivity, National Science Foundation, Washington, D C, 1973

Horowitz, A, Horowitz, I, Entropy, Markov Processes and Competition in the Brewing Industry, Journal of Industrial Economics, Vol 16, 1968, pp 196-211

Horowitz, A, Horowitz, I, The Real and Illusory Virtues of Entropy-Based Measures for Business and Economic Analysis, Decision Sciences, Vol 7, 1976, pp 121-136

Horowitz, I, Decision Making and the Theory of the Firm, Holt, Rinehart and Winston, New York 1970

Hotelling, H, The Economics of Exhaustible Resources, Journal of Political Economy, Vol 39, 1931, pp 137-175

Jaynes, E T, Information Theory and Statistical Mechanics, Brandeis Lectures, 1962, pp 182-218

Jaynes, E T, Foundations of Probability Theory and Statistical Mechanics, in Bunge, M, (Ed), Delaware Seminar in the Foundation of Physics, Springer, Berlin 1967

Jeans, Sir James, The New Background of Science, New York 1934a

Jeans, Sir James, Activities of Life and the Second Law of Thermodynamics, Nature, Vol 133, 1934b, pp 174, 612, 986

Keenan, J H, A Steam-Chart for Second Law Analysis, Mechanical Engineering, Vol 54, 1932, pp 195-205

Keenan, J H, Availability and Irreversibility in Thermodynamics, British Journal of Applied Physics, Vol 2, 1951, pp 183-192

Koefoed, J, Thermal Exergy and its Storage, Energy, Vol 2, 1977, pp 55-101

Lancaster, K, A New Approach to Consumer Theory, Journal of Political Economy, Vol 74, 1966a, pp 132-157

Lancaster, K, Change and Innovation in the Technology of Consumption, American Economic Review (Papers and Proceedings), Vol 56, 1966b, pp 14-23

Layzer, D, The Arrow of Time, Scientific American, Vol 233, 1955, pp 56-69

Lisman, J H C, Econometrics and Thermodynamics: A Remark on Davis' Theory of Budgets, Econometrica, Vol 17, 1949, pp 59-62

Lotka, A J, Contribution to the Energetics of Evolution, Proceedings, National Academy of Sciences, Vol 8, 1922, pp 147-151

Louw, N J, The Thermodynamics of Energy Utilization, Chemsa, Vol 1, 1975, pp 181-190

Lovins, A B, Soft Energy Paths, Ballinger, Cambridge, Mass, 1977

Magie, W F, (Ed), The Second Law of Thermodynamics, New York 1899

Maloney, K F, Economic Potential of Steam Turbines in the HPI, Hydrocarbon Processing, Vol 54, No 11, November 1975, pp 261-264

Marchetti, C, Energy Systems - The Broader Context, Research Memorandum RM-78-18, IIASA, Laxenburg 1978

Monod, J, Chance and Necessity, Random, London 1972

Murphy, R E, Adaptive Processes in Economic Systems, Academic Press, New York 1965

Nilsson, S, Kristoferson, L, Energy Analysis and Economics, Ambio, Vol 5, 1976, pp 27-29

Nissen, D, Randolph, P, A Pricing Model for Hydrocarbon Energy, Presentation, ORSA/TIMS National Meeting, Los Angeles, November 1978

Nämnden för energiproduktionsforskning, Solenergi i Sverige, NE 1977:21, Stockholm 1977

Näslund, B, An Analysis of Economic Size Distributions, Springer, Berlin 1977

Odum, H T, Environment, Power and Society, Wiley-Interscience, New York 1971

Odum, H T, Energy, Ecology and Economics, Ambio, Vol 11, 1973, pp 220-227

Odum, H T, Pinkerton, R C, Time's Speed Regulator: The Optimum Efficiency for Maximum Power Output in Physical and Biological Systems, American Scientist, Vol 43, 1955, pp 331-343

Oort, A H, The Energy Cycle of the Earth, Scientific American, September 1970, pp 54-63

Pitts, D R, Sissom, L E, Heat Transfer, Schaum, New York 1977

Proceedings of a NATO Science Committee Conference on Thermal Energy Storage (TES), Energy, Vol 2, 1977, 53-101

Rant, Z, Exergie, ein neues wort für „technische Arbeitsfähigkeit", Forschung auf dem Gebiete des Ingenieurswesens, Vol 22, 1956, pp 36-37

Rant, Z, Der Einfluss der Luftvorwärmung auf die nichtumkehrbarkeiten der Verbrennung, Brennstoff-Wärme-Kraft, Vol 13, 1961, pp 496-500

Rant, Z, Thermodynamische Bewertung chemischer Prozesse, Chemie Ingenieur Technik, Vol 41, 1969, pp 891-942

Raymond, R C, Communication, Entropy and Life, American Scientist, Vol 38, 1950

Reichenbach, H, The Direction of Time, California University Press, Berkeley, Cal, 1956

Reif, F, Fundamentals of Statistical and Thermal Physics, McGraw-Hill, New York 1965

Rögener, H, Exergieverluste im Dampfkraftprozess, Brennstoff-Wärme-Kraft, Vol 13, 1961, pp 493-495

Salamon, P, Andresen, B, Berry, R S, Thermodynamics in Finite Time. II. Potentials for finite-time processes, Physical Review A, Vol 15, 1977, pp 2094-2101

Sander, D E, The Price of Energy, Annual Review of Energy, Vol 1, pp 391-421

Scherer, C R, Golabi, K, Geothermal Resevoir Management, UCB/SERL Report No 78-5, Sanitary Engineering Research Laboratory, University of California, Berkeley, Cal, February 1978

Scherer, C R, Golabi, K, Tsang, C F, Mozumder, S., Optimal Energy Extraction from a Hot Water Geothermal Resvoir, Department of Civil Engineering, University of California, Berkeley, Cal, November 1977

Schipper, L, Lichtenberg, A J, Efficient Energy Use and Well-Being: The Swedish Example, Science, Vol 194, 1976, pp 1001-1013

Schneider, S H, Dennett, R D, Climatic Barriers to Long-Term Energy Growth, Ambio, Vol 4, 1975, pp 65-74

Schulze, W D, The Optimal Use of Non-Renewable Resources:The Theory of Extraction, Journal of Environmental Economics and Management, Vol 1, 1974, pp 53-73

Shannon, C, Weaver, W, The Mathematical Theory of Communication, Illinois University Press, Urbana, Ill, 1962

Shepard, M L, Chaddock, J B, Cocks, F H, Harman, C M, Introduction to Energy Technology, Ann Arbor Science, Ann Arbor 1977

Singer, S F, Human Energy Production as a Process in the Biosphere, Scientific American, September 1970, pp 175-190

Solow, R M, Wan, F Y, Extraction Costs in the Theory of Exhaustible Resources, Bell Journal of Economics, Vol 7, 1976, pp 359-370

Summers, C M, The Conversion of Energy, Scientific American, Vol 225, 1971, pp 149-160

Szilard, L, Ueber die Entropieverminderung in einem thermodynamischen System bei eingriffen intelligenter Wesen, Zeitschrift für Physik, Vol 53, 1929, pp 840-856

Thiel, H, Economics and Information Theory, North-Holland, Amsterdam 1967

Thoma, J, Energy, Entropy and Information, Research Memorandum RM-77-32, IIASA, Laxenburg, June 1977

Thoma, J, Entropy Radiation and Accumulation with Photocells, Chemical Reactions and Plant Growth, Research Memorandum RM-78-14, IIASA, Laxenburg, March 1978

Tribus, M, The Case for Essergy, Mechanical Engineering, Vol 97, 1975, p 75

Tribus, M, McIrvine, E C, Energy and Information, Scientific American, Vol 225, 1971, pp 179-188

Tribus, M, Shannon, P T, Evans, R B, Why Thermodynamics is a Logical Consequence of Information Theory, American Institute of Chemical Engineers Journal, March 1966, pp 244-248

US Energy Demand and Supply 1976-1985, Final Report, Congressional Research Service, Washington, D C, March 1978

Weinberg, A M, Reflections on the Energy Wars, American Scientist, Vol 66, 1978, pp 153-158

Weingart, J M, Systems Aspects of Large-Scale Solar Energy Conversion, Research Memorandum RM-77-20, IIASA, Laxenburg, May 1977

Wilson, A G, Entropy in Urban and Regional Modelling, Pion, London 1970

Wilson, A G, Urban and Regional Models, Wiley, London 1974

Wilson, A H, Thermodynamics and Statistical Mechanics, Cambridge University Press, Cambridge 1957

Yasnikov, G P, Belousov, V S, Exergy Representation in the Thermodynamics of Irreversible Processes, Journal of Engineering Physics, Vol 32, 1977, pp 210-214

Yourgrau, W, van der Merwe, A, Raw, G, Treatise on Irreversible and Statistical Thermodynamics, Macmillan, New York 1966

Zimmermann, M B, Modelling Depletion in a Mineral Industry: The Case of Coal, Bell Journal of Economics, Vol 8, 1977, pp 41-65

INITIAL DISTRIBUTION LIST

	Copies
Defense Documentation Center Cameron Station Alexandria, Virginia 22314	2
National Swedish Board for Technical Development % Professor Robert Grubbstrom Production Economics Dept. Linkoping Institute of Technology S-518 83 Linkoping Sweden	1
Dean of Research Naval Postgraduate School Monterey, CA 93940	1
Library Code 0412 Naval Postgraduate School Monterey, CA 93940	2
Professor Robert Grubbstrom Production Economics Dept. Linkoping Institute of Technology S-518 83 Linkoping Sweden	2

LME