AD-A113 458 NAVAL RESEARCH LAB WASHINGTON DC F/G 13/12
NRL 324-CU M CHAMBER PRESSURIZATION EXPERIMENT: PRESSURANT CONC--ETC(U)
MAR 82 J P STONE, J I ALEXANDER, T T STREET
UNCLASSIFIED NRL-8523 NL

1 - 2

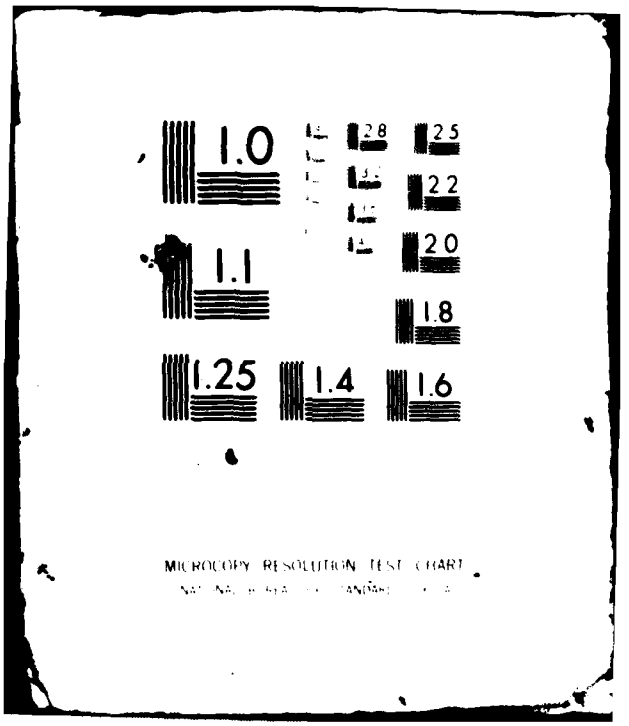
1.0
2.8
2.5
2.2
2.0
1.1
1.8
1.25
1.4
1.6
MICROCOPY RESOLUTION TEST CHART

NRL Report 8625

NRL 324-m^3 Chamber Pressurization Experiment: Pressurant Concentration Histories With and Without Obstacles to Flow

J. P. Stone, J. I. Alexander, T. T. Street,
H. J. St. Aubin, and F. W. Williams

Combustion and Fuels Branch
Chemistry Division

AD A113458

March 15, 1982

DTIC FILE COPY

NAVAL RESEARCH LABORATORY
Washington, D.C.

DTIC
ELECTE
APR 15 1982
S D
A

Approved for public release; distribution unlimited.

82 04 15 014

SECURITY CLASSIFICATION OF THIS PAGE (When Data Entered)

REPORT DOCUMENTATION PAGE		READ INSTRUCTIONS BEFORE COMPLETING FORM
1. REPORT NUMBER NRL Report 8523	2. GOVT ACCESSION NO. AD-A113458	3. RECIPIENT'S CATALOG NUMBER
4. TITLE (and Subtitle) NRL 324-m^3 CHAMBER PRESSURIZATION EXPERIMENT: PRESSURANT CONCENTRATION HISTORIES WITH AND WITHOUT OBSTACLES TO FLOW		5. TYPE OF REPORT & PERIOD COVERED Final report on one phase of an NRL problem. 6. PERFORMING ORG. REPORT NUMBER
7. AUTHOR(s) J. P. Stone, J. I. Alexander, T. T. Street, H. J. St. Aubin, and F. W. Williams		8. CONTRACT OR GRANT NUMBER(s)
9. PERFORMING ORGANIZATION NAME AND ADDRESS Naval Research Laboratory Washington, DC 20375		10. PROGRAM ELEMENT, PROJECT, TASK AREA & WORK UNIT NUMBERS 61153N-1-3; RR013-01-44 NRL Problem 61-0056-0-1
11. CONTROLLING OFFICE NAME AND ADDRESS Office of Naval Research Arlington, VA 22217		12. REPORT DATE March 15, 1982 13. NUMBER OF PAGES 104
14. MONITORING AGENCY NAME & ADDRESS(if different from Controlling Office) Naval Research Laboratory Washington, DC 20375 ATT. A. Schindler, Code 6000		15. SECURITY CLASS. (of this report) UNCLASSIFIED 15a. DECLASSIFICATION/DOWNGRADING SCHEDULE

16. DISTRIBUTION STATEMENT (of this Report)

Approved for public release; distribution unlimited.

17. DISTRIBUTION STATEMENT (of the abstract entered in Block 20, if different from Report)

18. SUPPLEMENTARY NOTES

19. KEY WORDS (Continue on reverse side if necessary and identify by block number)

Fire suppression
Enclosed spaces
Gas mixing
Scale modeling

Cu. m

20. ABSTRACT (Continue on reverse side if necessary and identify by block number)

Nitrogen pressurization of pressurizable enclosures is proposed for fire suppression. Implementation requires pressurant distribution information. Distribution histories, with and without flow obstacles, are reported as inferred from temperature measurements observed during pressurization of a 324-m^3 fire chamber from 1 to 2 atmospheres (101.3 to 202.6 kPa). For pressurant injection times of 10 and 30 s, pressurant and resident gases were judged to be well mixed within 1.6 injection times, and no grossly unmixed pockets were observed.

DD FORM 1 JAN 73 1473 EDITION OF 1 NOV 65 IS OBSOLETE
S/N 0102-014-6601

SECURITY CLASSIFICATION OF THIS PAGE (When Data Entered)

CONTENTS

INTRODUCTION 1

DESCRIPTION OF EQUIPMENT 1

- Nitrogen Pressurization System 1
- Nozzles 3
- Thermocouple and Nozzle Locations 4
- Flow Obstacle 4

EXPERIMENTAL PROCEDURE 5

- Without Flow Obstacle (Uncluttered) 5
- With Flow Obstacle (Cluttered) 6

EXPERIMENTAL RESULTS 6

- A-Tables 6
- B-Tables 26
- C-Tables 46
- D-Tables 51
- E-Tables 56

DISCUSSION 61

REFERENCES 63

APPENDIX A 65

APPENDIX B 85

APPENDIX C 95

DTIC COPY INSPECTED 2

PRECEDING PAGE BLANK-NOT FILMED

NRL 324-m^3 CHAMBER PRESSURIZATION EXPERIMENT: PRESSURANT CONCENTRATION HISTORIES WITH AND WITHOUT OBSTACLES TO FLOW

INTRODUCTION

Gas-mixing and scale-modeling studies continue in the new 324-m^3 fire-test facility at the Naval Research Laboratory (NRL). These studies extend previous studies conducted in the NRL 5-m^3 chamber and in its one-sixth-scale model at the University of Washington (UW). We explore further the concept of suppressing unwanted fires in pressurizable spaces by injection of nitrogen gas as proposed by Carhart and Fielding [1]. The chamber of this new facility is of sufficient size to allow realistic full-scale tests. Objectives of these tests were to place the new facility in operation, to infer pressurant gas-concentration histories from temperature (thermocouple) measurements during chamber pressurization from 1 to 2 atmospheres (101.3 to 202.6 kPa), and to present results in a convenient form consistent with the Corlett et al. scale-modeling hypothesis [2].

In this report, we describe the 324-m^3 chamber, its nitrogen pressure system, and experiments both with and without obstacles to flow, and we then present the reduced data.

DESCRIPTION OF EQUIPMENT

Figure 1 shows a view of the 324-m^3 facility as one looks to the southwest. The steel pressure vessel lies horizontally on two concrete piers; design pressure is 5 atmospheres (507 kPa) according to the ASME Unfired Pressure Vessel Code. The chamber was tested hydrostatically at 7.65 atmospheres (775 kPa); 324.2 m^3 of water filled the vessel. Its inside diameter is 5.85 m and its length is 14.82 m. The cylindrical section is 8.35 m long. Installed in the center of the north hemispherical end is a 457-mm-diameter pressure-relief device. The disk design rupture pressure is 5 atmospheres for temperatures to 260°C. A catwalk attaches around the vessel on all sides but the north, providing convenient access to the seven viewports, three on the east and four on the west. Above these viewports, four nitrogen pressure cylinders are mounted symmetrically. Each cylinder is 8.534 m long and each has a 0.610-m diameter. Each has a volume of 2.088 m^3 and a design pressure of 122 atmospheres (12.36 MPa). A nitrogen tube trailer shown in the right foreground of Fig. 1 supplies nitrogen gas, beginning at 233 atmospheres (23.61 MPa), to the four pressure cylinders, which normally are charged to 100 atmospheres (10.13 MPa). Just west of the chamber, and behind the tube trailer, the instrument trailer appears. It houses all instruments, data collection devices, and control devices. Facing the instrument trailer, but not visible in Fig. 1, is a walk-in hatch, centered in the west side of the chamber, which provides chamber access.

Nitrogen Pressurization System

Figure 2 is a schematic of the high-pressure piping system typical of each nitrogen pressure cylinder. For convenience, only one pressure cylinder and the north manifold are shown. Both cylinders on the west side connect to the north manifold, while the two cylinders on the east side connect to the south manifold. Flow is controlled from either or both ends of a cylinder to its manifold by a manual valve and an actuated 2-in. (5-cm) valve in series. Four pipes from each manifold extend into the chamber, so that a nozzle exit is located 1.170 m from the top inside surface of the chamber

Manuscript submitted on October 22, 1981.

Fig. 1 — The NRL 324-m^3 fire chamber facility

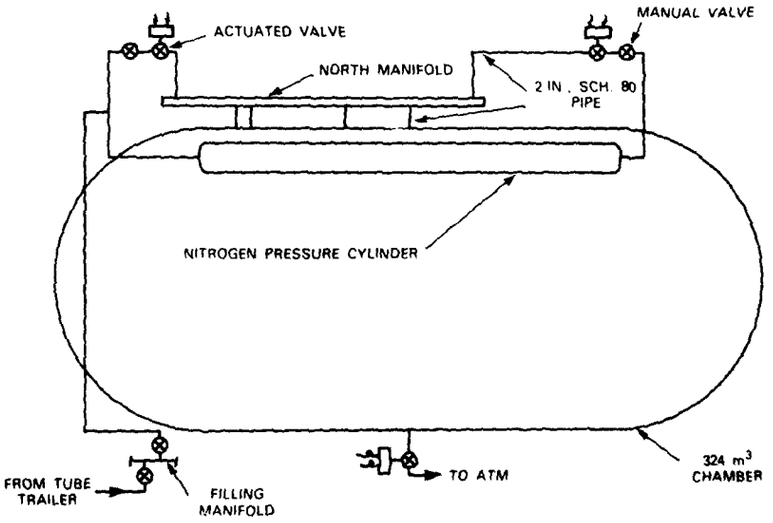

Fig. 2 — Typical high-pressure piping for each of the four nitrogen pressure cylinders

and is directed vertically downward on a line normal to the chamber axis. The four pipes from each manifold are located along the chamber length so that either a three-nozzle or a four-nozzle array (equally spaced) can be selected. Pipe extensions without nozzles are capped. The high-pressure steel pipe is 2-in. (5-cm), schedule 80. Nozzle flow calibration is possible since an ASTM, thin-plate, square-edged orifice [3] connects between the north and south manifold.

Nozzles

Figure 3 shows a nozzle assembly view. Nozzles connect to the 2-in. pipe extensions. The high-density polyethylene liner minimizes heat flow to the nitrogen gas stream and thus maximizes the temperature difference between the injected pressurant gas and the chamber resident gas. In this system flow in each nozzle throat remains critical [4] during chamber pressurization.

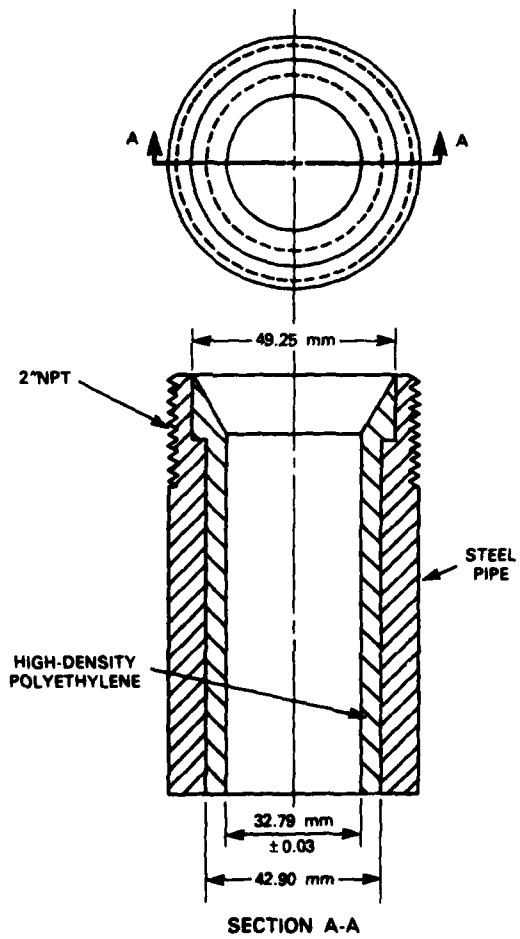

Fig. 3 — Sectional view of nozzle assembly

Thermocouple and Nozzle Locations

In Fig. 4, we show the two positions of the 13-thermocouple array. Position 2 is along the chamber centerline, while position 1 is displaced laterally 0.6 of the distance to the chamber wall and is in the upper northwest quadrant of the chamber. If the $z = 0$ plane bisects the chamber normal to its axis and positive z-values are to the north and negative ones to the south, then the cylindrical r- and θ-coordinates for position 2 are 0.000 m and 0°, respectively; for position 1 they are 2.017 m and 45°, respectively. The z-coordinates for each of the 13 thermocouples remain the same for both positions, i.e., $z = z_l$, where $l = 1, \ldots, 13$, and the 13 z-coordinates are, respectively, −0.586, −0.293, 0.000, 0.293, 0.586, 0.878, 2.049, 2.342, 2.635, 2.928, 3.220, 3.513, and 3.806 m. The thermocouples are bare-wire chromel-alumel, 0.10 mm in diameter, with time constants of less than 0.2 s.

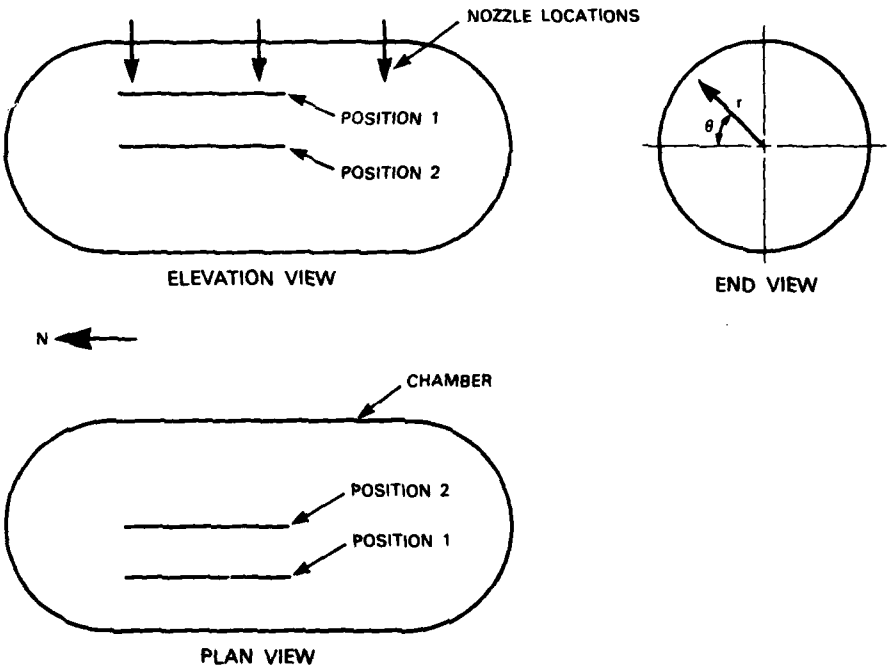

Fig. 4 — Schematic showing the two positions inside the chamber of the 13-thermocouple array; position 1 is off center; position 2 is along the chamber centerline. Three nozzle locations are also shown.

When three nozzles are used, they are located in the three vertical planes $z = +1.216$, 0.0, and −1.216 m, with nozzle exits directed downward normal to the chamber axis and positioned 1.170 m below the top of the chamber wall. The south nozzle is in the plane $z = -1.216$ m.

Flow Obstacle

Figure 5 is a plan-view sketch that shows the location of the flow obstacle in the chamber. The obstacle is a metal cabinet, 1.216 m wide by 1.216 m deep by 2.667 m high, with the top, bottom, and three sides closed. The fourth side is covered with a screen wire that has 15 openings per 25.4 mm with 0.25 mm wire diameter; the screen side is shown in Fig. 5 facing to the west. In the experiments, it also faced to the north. The top of the cabinet extends 0.686 m above the chamber centerline, along which the 13 thermocouples are positioned.

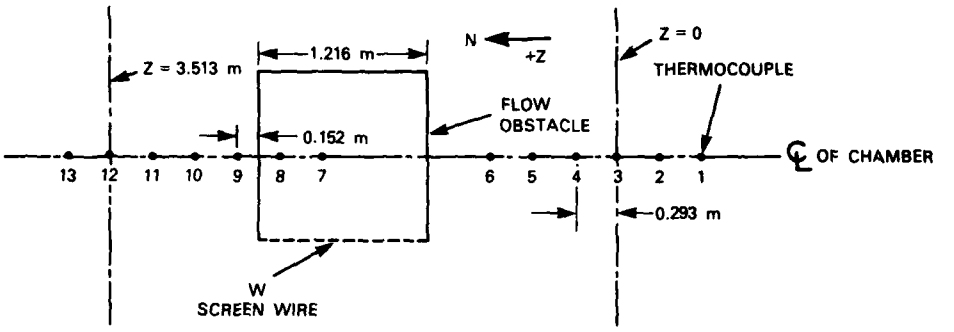

PLAN VIEW

Fig. 5 — Plan-view schematic of chamber interior giving obstacle location and thermocouple *l* locations for position 2 relative to the vertical plane $z = 0$

EXPERIMENTAL PROCEDURE

The procedure used for experiments without the flow obstacle (uncluttered) and the procedure used with the flow obstacle (cluttered) are described as follows.

Without Flow Obstacle (Uncluttered)

The same procedure was repeated in each of two sets of runs with no flow obstacle. There were seven replicate runs in set 1 and four in set 2 (see Table 1). For set 1, the thermocouple array was in position 1; for set 2, it was in position 2. Three pressure cylinders charged to about 100 atmospheres were used in each set. The two west cylinders fed nitrogen gas to the north manifold, and one east cylinder fed the south manifold. Flow was from both ends of each cylinder. The north manifold fed two nozzles (north and center) while the south fed the third (south). The *z*-coordinates for the north, center, and south nozzles were 3.513, 0.000, and −3.413 m, respectively.

Table 1 — Description of Experiments

Experimental Set Number	Scaling Run Numbers	Number of Runs	Thermocouple Position Number	Nozzles Used	Clutter Condition	Obstacle Screen Position	Numbers of A- and B-Tables
1	230-236	7	1	3	Unclut.	—	2-8
2	237-240	4	2	3	Unclut.	—	9-12
3	241-244	4	2	1 (South)	Cluttered	West	13-16
4	245-248	4	2	1 (South)	Cluttered	North	17-20

Data collection was started 30 s prior to the start of a run. A run was started by the simultaneous opening of the appropriate six activated valves. Nitrogen gas flowed into the chamber until its pressure increased from 1 to 2 atmospheres, requiring about 12 s. The valves were then closed. Data collection continued for a total of 300 s. Seventeen channels of data were recorded by two data loggers (Doric-Digitrend 200) as follows:

13 channels for the thermocouple array,
2 channels for pressurant gas supply temperatures,

1 channel for chamber pressure, and
1 channel for nitrogen cylinder pressures.

Data loggers scanned each channel twice per second. Loggers were controlled in parallel so that each agreed in time.

With Flow Obstacle (Cluttered)

Two sets (3 and 4), of four replicate runs each, were made with an obstacle (see Table 1). The same procedure was used as described above, with the following exceptions. The thermocouple array was used only in position 1 and only the south nozzle was used. The south manifold was fed nitrogen by three pressure cylinders, the two east cylinders and one west cylinder. The chamber was pressurized to 2 atmospheres in about 30 s. For set 3, the screened side of the obstacle faced west; for set 4, it faced north.

EXPERIMENTAL RESULTS

Detailed data for the four sets of experiments listed in Table 1 are presented in a comprehensive series of five tables, A, B, C, D, and E. The information found in each comprehensive table is described below prior to discussion of the data.

A-Tables

Tables 2A to 20A, called A-tables, present temperature histories at 1-s intervals, as determined by the 13-thermocouple array at each *I*-Location, 1 through 13. Interior chamber coordinates of each *I*-location are given by the subtable located in the upper right-hand corner of the A-tables. In addition, the first four columns in the A-tables, respectively, give:

(1) Time in seconds with $t = 0$ corresponding to the time the activated-valve switch is thrown to open.

(2) Nitrogen pressure cylinder pressures in atmospheres.

(3) Pressurant gas supply temperature at nozzle exit in K.

(4) Chamber pressure in atmospheres.

Each A-table is programmatically produced (see Appendix A) from the two magnetic data tapes obtained during the experimental run. Accordingly, A-tables are produced for all the runs in each set.

Table 2A — Scaling Run 230: Uncluttered 324–m^3 Chamber, Three 3.279-cm Nozzles

Time t (s)	Press Cyl P (atm)	T_1 (K)	Chamber P (atm)	Chamber Absolute Temperatures (K) at Locations I 1	2	3	4	5	6	7	8	9	10	11	12	13
-5	***	***	1.002	285.2	284.0	283.9	285.0	285.0	285.1	283.2	283.2	284.2	284.2	284.2	284.2	283.2
-4	***	***	1.002	285.2	284.0	283.9	285.0	285.0	285.2	283.2	283.2	284.2	284.2	284.2	284.2	283.2
-3	***	***	1.002	285.2	284.0	283.9	285.0	285.0	285.1	283.2	283.2	284.2	284.2	284.2	284.2	283.2
-2	***	***	1.002	285.2	284.0	283.9	285.0	285.0	285.1	283.2	283.2	284.2	284.2	284.2	284.2	283.2
-1	*	***	1.002	285.9	284.3	283.9	285.3	285.4	286.4	283.2	283.2	284.2	284.2	284.2	284.2	283.2
0[illegible]	[illegible]4	262.0	1.055	292.9	290.6	289.2	291.2	292.4	293.6	285.7	287.2	288.2	287.2	288.7	287.2	286.7
1[illegible]	[illegible]5	257.6	1.185	298.4	296.3	295.7	297.5	298.5	299.6	291.2	292.2	294.2	293.2	294.2	293.2	293.2
27[illegible].442		254.3	1.304	301.5	299.5	299.4	300.8	301.5	301.9	296.2	296.2	297.2	296.7	297.7	297.2	297.2
364.415		252.2	1.413	303.5	301.3	301.6	302.6	303.1	302.7	299.2	299.2	300.2	300.2	300.2	299.2	299.2
459[illegible]07		250.4	1.509	303.9	302.8	302.4	303.7	304.0	304.1	300.2	300.7	301.7	301.7	302.2	301.2	301.2
55[illegible]	[illegible]1	247.9	1.597	305.1	303.5	303.6	304.5	304.5	304.7	303.2	302.2	303.2	303.2	304.2	303.2	302.2
650.[illegible]		244.3	1.678	305.5	305.0	304.8	305.5	305.4	305.4	303.2	302.2	303.7	303.7	303.7	303.7	303.7
746.45[illegible]		[illegible]41.6	1.753	305.8	304.5	304.7	305.3	305.2	305.4	303.2	303.2	304.2	303.2	303.2	303.2	303.2
844.895		239.2	1.798	306.2	304.7	304.5	305.5	305.3	305.5	303.2	302.2	304.2	304.2	304.2	304.2	303.2
940.864		236.7	1.863	306.2	304.7	304.3	305.7	305.6	305.5	303.7	302.7	304.2	304.7	304.2	303.7	303.2
1037.986		232.6	1.922	305.5	304.5	304.5	305.4	304.9	304.9	303.2	302.2	303.2	304.2	304.2	304.2	304.2
1136.935		196.3	1.966	304.8	303.4	303.7	304.5	304.2	304.4	301.7	301.7	302.7	302.7	303.7	302.7	302.7
1237.524		164.7	1.976	303.5	301.9	302.1	303.0	302.8	302.8	301.2	301.2	302.2	302.2	302.2	302.2	302.2
13	***	***	1.975	302.5	300.9	300.9	302.1	302.0	302.0	300.7	300.2	302.2	302.2	302.2	302.2	302.2
14	***	***	1.973	302.4	301.0	301.0	302.2	301.7	302.0	300.2	300.2	301.2	302.2	302.2	302.2	302.2
15	***	***	1.971	302.3	300.9	300.8	301.8	301.4	301.6	300.2	300.2	301.2	301.2	302.2	302.2	302.2
16	***	***	1.970	301.7	300.2	300.4	301.4	301.2	301.0	300.2	300.2	301.2	301.2	302.2	302.2	301.2
17	***	***	1.969	301.0	300.0	300.0	301.0	300.8	300.9	300.2	300.2	301.2	301.2	301.2	301.2	301.2
18	***	***	1.967	300.9	299.7	299.9	301.0	300.6	300.1	299.2	299.2	300.2	300.7	301.2	300.7	300.2
19	***	***	1.966	300.2	299.3	299.2	300.2	300.2	299.8	298.2	299.2	300.2	300.2	301.2	300.2	300.2
20	***	***	1.965	299.8	298.8	298.4	299.3	299.6	299.8	299.2	299.2	300.2	300.2	300.2	300.2	299.2
25	***	***	1.960	299.2	298.0	298.2	299.5	300.1	300.0	298.2	297.2	299.2	299.2	300.2	299.2	298.2
30	***	***	1.956	299.1	298.0	298.0	299.0	298.9	299.0	297.2	297.2	298.2	298.2	299.2	299.2	298.2
35	***	***	1.953	298.7	297.5	297.5	298.5	298.5	298.7	297.2	297.2	299.2	299.2	299.2	298.2	298.2
40	***	***	1.950	298.2	297.1	297.2	298.2	298.3	298.5	297.2	297.2	298.2	298.2	299.2	298.2	298.2
45	***	***	1.948	298.1	296.9	297.3	298.2	298.2	298.4	297.2	297.2	298.7	299.2	299.2	298.2	298.2
50	***	***	1.945	297.7	296.8	297.0	298.0	298.1	298.1	297.2	297.2	298.2	298.2	298.2	297.2	297.2
55	***	***	1.943	297.7	296.8	296.5	297.7	297.8	297.9	296.2	296.2	297.2	298.2	298.2	297.2	297.2
60	***	***	1.942	297.8	296.7	296.0	297.3	297.4	297.5	296.2	296.2	297.2	297.2	298.2	296.2	297.2
65	***	***	1.940	297.7	296.4	296.1	296.7	297.2	296.9	296.2	296.2	297.2	297.2	297.2	294.2	297.2
70	***	***	1.938	297.4	296.1	295.4	295.8	296.9	296.9	296.2	296.2	297.2	297.2	296.2	294.2	296.2
80	***	***	1.936	297.3	295.5	295.9	296.0	296.8	296.0	295.2	295.2	296.2	296.2	296.2	294.2	296.2
90	***	***	1.933	296.7	295.2	295.1	296.2	296.2	296.4	295.2	295.2	296.2	296.2	296.2	294.2	295.2
100	***	***	1.931	295.7	294.6	294.5	296.0	296.2	296.3	294.2	294.2	296.2	296.2	295.2	294.2	295.2
110	***	***	1.929	296.0	294.7	294.6	296.0	295.7	296.0	294.2	294.2	295.2	295.2	295.2	294.2	295.2
120	***	***	1.927	295.9	294.6	294.6	295.5	295.5	295.6	294.2	294.2	295.2	295.2	295.2	293.2	294.2
130	***	***	1.925	295.7	294.4	294.5	295.5	295.6	295.5	294.2	294.2	295.2	295.2	294.2	293.2	294.2
140	***	***	1.923	295.4	294.2	294.3	295.2	295.1	295.2	294.2	293.2	294.2	294.7	294.2	293.2	294.2
150	***	***	1.921	295.1	293.9	294.0	295.2	295.0	294.9	294.2	293.2	294.2	294.2	294.2	292.2	294.2
160	***	***	1.920	295.0	293.8	293.9	294.8	294.8	294.8	293.2	293.2	294.2	294.2	294.2	293.2	293.2
170	***	***	1.918	294.8	293.5	293.4	294.2	294.5	294.1	293.2	293.2	294.2	294.2	294.2	293.2	293.2
180	***	***	1.917	294.2	293.1	293.2	294.2	294.2	294.2	293.2	293.2	294.2	294.2	294.2	293.2	293.2
190	***	***	1.915	294.3	292.9	293.2	294.1	294.1	294.1	292.2	292.2	293.2	294.2	293.2	292.2	292.2
200	***	***	1.914	294.1	292.8	292.9	293.9	293.8	293.9	292.2	292.2	293.2	293.2	293.2	292.2	292.2
210	***	***	1.913	293.8	292.8	292.8	293.7	293.8	293.7	292.2	292.2	293.2	293.2	293.2	292.2	292.2

COORDINATES

I	R (M)	THETA (DEG)	Z (M)
1	1.756	45	-0.586
2	1.756	45	-0.293
3	1.756	45	0.000
4	1.756	45	0.293
5	1.756	45	0.586
6	1.756	45	0.878
7	1.756	45	2.049
8	1.756	45	2.342
9	1.756	45	2.635
10	1.756	45	2.928
11	1.756	45	3.220
12	1.756	45	3.513
13	1.756	45	3.806

Table 3A — Scaling Run 231: Uncluttered 324–m^3 Chamber, Three 3.279-cm Nozzles

Time t (s)	Press Cyl P (atm)	T_i (K)	Chamber P (atm)	Chamber Absolute Temperatures (K) at Locations I												
				1	2	3	4	5	6	7	8	9	10	11	12	13
-5	***	***	1.003	286.5	285.6	285.6	286.5	286.4	286.5	286.2	286.2	287.2	287.2	287.2	286.2	286.2
-4	***	***	1.003	286.6	285.6	285.6	286.5	286.5	286.5	286.2	286.2	287.2	287.2	287.2	286.2	286.2
-3	***	***	1.003	286.5	285.6	285.6	286.5	286.5	286.5	286.2	286.2	287.2	287.2	287.2	286.2	286.2
-2	***	***	1.003	286.5	285.6	285.6	286.5	286.5	286.5	286.2	286.2	287.2	287.2	287.2	286.2	286.2
-1	***	***	1.003	286.5	285.6	285.6	286.5	286.5	286.5	286.2	286.2	287.2	287.2	287.2	286.2	286.2
0	.483	307.1	1.003	287.3	285.9	285.6	286.7	286.9	287.9	286.2	286.2	287.2	287.2	287.2	286.7	286.2
1	.503	261.2	1.065	294.8	292.4	290.7	292.7	293.5	294.4	289.2	290.2	291.2	290.2	291.2	289.2	289.2
2	.497	257.1	1.195	299.5	298.1	297.8	298.8	299.0	298.4	293.7	295.2	296.2	294.7	295.7	294.7	295.2
3	.490	254.2	1.313	302.9	301.5	301.4	302.0	302.5	302.4	298.2	298.2	300.2	299.2	300.2	300.2	300.2
4	.490	251.8	1.418	304.5	303.6	303.2	303.8	304.3	304.8	301.2	301.2	301.7	302.2	302.7	301.7	301.7
5	.483	250.1	1.513	305.9	304.5	303.9	305.2	305.4	305.1	303.2	304.2	304.2	303.2	303.2	303.2	304.2
6	.483	247.4	1.600	306.8	304.7	304.7	305.2	305.4	305.5	304.2	304.2	305.2	305.2	305.7	304.7	305.2
7	.483	244.5	1.681	306.7	304.9	305.1	305.9	305.8	305.3	304.2	304.2	305.2	305.2	305.2	305.2	305.2
8	.480	240.5	1.754	306.3	304.9	305.6	306.4	306.0	305.3	305.2	305.2	306.2	305.7	305.7	305.2	305.7
9	.476	238.3	1.822	306.1	305.2	304.9	305.9	305.8	305.5	306.2	304.2	305.2	305.2	305.2	305.2	306.2
10	.476	235.8	1.884	305.7	304.7	304.7	305.7	306.0	306.2	305.2	304.7	305.2	305.2	304.7	305.2	305.7
11	.429	229.1	1.941	305.9	304.6	304.8	305.1	304.7	304.5	305.2	304.2	305.2	305.2	306.2	304.2	304.2
12	.429	180.2	1.976	303.8	303.5	303.8	304.6	304.4	304.4	304.2	303.7	304.7	304.7	304.7	304.2	304.2
13	.429	163.0	1.982	303.5	302.5	302.5	303.7	303.5	303.2	303.2	303.2	304.2	305.2	305.2	304.2	304.2
14	***	***	1.980	303.8	301.8	302.1	303.5	302.9	302.9	303.2	303.2	304.2	304.2	304.2	303.7	303.7
15	***	***	1.978	303.2	301.4	301.8	302.8	302.1	301.9	302.2	302.2	304.2	304.2	304.2	304.2	303.2
16	***	***	1.977	303.0	301.6	301.6	302.4	302.3	301.7	301.7	302.2	303.2	304.2	304.2	303.7	303.2
17	***	***	1.975	302.9	301.7	301.8	302.4	302.4	302.1	302.2	302.2	303.2	304.2	303.2	303.2	302.2
18	***	***	1.974	302.2	301.3	301.5	302.6	302.2	302.0	301.2	302.2	302.2	303.2	303.2	303.2	302.2
19	***	***	1.973	301.9	301.0	301.5	302.4	302.1	302.1	301.2	301.2	302.2	302.7	303.2	301.7	301.2
20	***	***	1.971	301.5	300.6	301.2	302.0	301.9	302.1	301.2	301.2	302.2	302.2	302.2	301.2	301.2
21	***	***	1.970	301.2	300.2	300.6	301.5	301.4	301.7	301.2	301.2	302.2	302.2	302.2	301.7	301.2
26	***	***	1.966	300.8	299.5	299.3	300.1	300.0	299.9	300.2	300.2	300.2	301.2	301.2	300.2	300.2
31	***	***	1.962	299.9	298.9	299.2	300.0	299.9	300.0	300.2	300.2	301.2	301.2	301.2	301.2	301.2
36	***	***	1.959	299.9	298.8	298.8	299.7	299.5	299.5	300.2	300.2	301.2	301.2	301.2	300.2	300.2
41	***	***	1.956	299.7	298.8	298.9	299.6	299.5	299.5	299.2	299.2	300.2	300.2	300.2	299.2	299.2
46	***	***	1.954	299.4	298.4	298.5	299.2	299.5	299.5	298.2	298.2	299.2	299.2	299.2	298.2	299.2
51	***	***	1.952	299.3	298.4	298.5	299.1	299.0	299.1	298.2	298.2	299.2	299.2	299.2	299.2	299.2
56	***	***	1.950	299.1	298.3	298.1	298.6	298.6	298.9	299.2	299.2	300.2	299.2	299.2	298.2	298.2
61	***	***	1.948	298.7	297.7	297.7	298.8	298.8	299.0	298.2	298.2	299.2	299.2	299.2	298.2	298.2
66	***	***	1.946	298.6	297.4	297.7	298.5	298.6	298.7	298.2	298.2	299.2	298.2	298.2	298.2	298.2
71	***	***	1.945	298.4	297.4	297.5	298.5	298.4	298.3	298.2	297.2	298.2	298.2	297.7	297.2	298.2
81	***	***	1.942	298.1	297.3	297.3	298.1	298.1	298.3	297.2	296.7	298.2	298.2	297.2	297.2	298.2
91	***	***	1.940	298.0	296.9	297.1	298.0	297.4	297.4	297.2	296.2	297.2	297.2	297.2	295.7	297.7
101	***	***	1.938	297.4	296.5	296.6	297.4	297.1	297.1	297.2	296.2	297.7	297.2	297.2	296.2	297.2
111	***	***	1.936	296.9	296.2	296.4	297.2	297.2	297.2	297.2	296.2	297.2	297.2	297.2	296.2	297.2
121	***	***	1.934	297.1	295.9	295.8	297.0	297.0	297.1	296.2	296.2	297.2	297.2	297.2	296.2	296.2
131	***	***	1.932	296.9	295.7	295.5	296.7	296.7	296.9	296.2	296.2	297.2	297.2	297.2	295.2	296.2
141	***	***	1.930	296.6	295.5	295.5	296.4	296.0	296.4	296.2	296.2	296.2	297.2	296.2	295.2	296.2
151	***	***	1.929	296.4	295.2	295.4	296.2	295.9	295.9	296.2	296.2	296.2	297.2	296.2	294.2	296.2
161	***	***	1.927	295.9	295.0	295.2	296.0	296.0	296.1	296.2	296.2	296.2	296.2	296.2	294.2	295.2
171	***	***	1.926	296.0	294.6	294.8	296.0	295.9	295.8	296.2	295.2	296.2	296.2	296.2	294.2	295.2
181	***	***	1.924	295.9	294.5	294.5	295.9	295.8	295.9	295.2	295.2	296.2	296.2	295.2	295.2	295.2
191	***	***	1.923	295.7	294.5	294.5	295.2	295.1	295.7	295.2	295.2	296.2	296.2	296.2	294.2	295.2
201	***	***	1.922	295.4	294.3	294.3	295.1	295.0	295.2	295.2	295.2	296.2	296.2	295.2	293.2	294.2

COORDINATES

I	R (M)	THETA (DEG)	Z (M)
1	1.756	45	-0.586
2	1.756	45	-0.293
3	1.756	45	0.000
4	1.756	45	0.293
5	1.756	45	0.586
6	1.756	45	0.878
7	1.756	45	2.049
8	1.756	45	2.342
9	1.756	45	2.635
10	1.756	45	2.928
11	1.756	45	3.220
12	1.756	45	3.513
13	1.756	45	3.806

Table 4A — Scaling Run 232: Uncluttered 324–m^3 Chamber, Three 3.279-cm Nozzles

Time t (s)	Press Cyl P (atm)	T_s (K)	Chamber P (atm)	Chamber Absolute Temperatures (K) at Locations I 1	2	3	4	5	6	7	8	9	10	11	12	13
-5	***	***	1.005	281.6	280.7	280.6	281.6	281.4	281.5	281.2	281.2	282.2	282.2	282.2	282.2	281.2
-4	***	***	1.005	281.6	280.7	280.6	281.6	281.5	281.5	281.2	281.2	282.2	282.2	282.2	282.2	281.2
-3	***	***	1.005	281.6	280.7	280.7	281.6	281.4	281.5	281.2	281.2	282.2	282.2	282.2	282.2	281.2
-2	***	***	1.005	281.5	280.7	280.7	281.6	281.4	281.5	281.2	281.2	282.2	282.2	282.2	282.2	281.2
-1	***	***	1.005	281.5	280.7	280.6	281.6	281.4	281.5	281.2	281.2	282.2	282.2	282.2	282.2	281.2
097.061	279.6		1.046	282.7	281.4	280.9	282.1	282.4	283.3	281.2	281.2	282.2	282.2	282.2	282.2	281.2
183.895	256.9		1.096	289.9	287.6	285.6	287.5	289.4	290.1	285.2	286.2	287.7	286.7	287.2	285.7	285.7
276.365	252.1		1.227	295.3	293.6	292.5	294.0	294.9	294.9	291.2	291.2	292.2	291.2	292.2	292.2	292.2
371.952	248.4		1.307	298.4	297.3	296.7	297.1	297.9	297.7	294.2	295.2	296.2	294.2	295.2	294.2	294.2
465.932	246.2		1.415	299.8	298.5	298.0	298.9	299.3	299.2	295.7	296.2	297.2	296.2	297.2	296.7	296.7
560.497	244.0		1.516	300.7	299.4	299.8	300.4	300.8	300.9	298.2	298.2	299.2	298.2	299.2	298.2	298.2
655.755	241.3		1.604	300.9	300.1	300.0	300.8	300.8	301.0	299.7	298.7	299.7	299.7	299.2	299.2	299.7
751.442	238.3		1.687	300.8	300.0	300.2	301.0	301.5	301.2	300.2	300.2	301.2	300.2	300.2	300.2	300.2
847.602	236.7		1.762	301.4	300.0	300.6	301.3	301.7	300.9	300.2	299.7	299.7	299.7	299.7	299.2	300.2
944.177	234.2		1.831	301.8	300.7	300.7	301.7	301.9	301.7	301.2	300.2	301.2	300.2	300.2	298.2	300.2
1040.973	231.3		1.894	301.3	300.4	301.1	302.0	301.6	300.2	299.7	298.7	300.7	300.7	300.7	300.2	300.7
1138.776	219.3		1.952	301.1	300.0	300.6	300.8	300.3	300.0	299.2	298.2	299.2	300.2	300.2	300.2	300.2
1239.265	172.3		1.974	299.9	299.5	300.0	300.5	299.9	299.5	299.2	298.2	298.2	298.2	299.2	299.2	299.2
1339.806	169.8		1.979	299.4	298.0	298.6	298.9	298.7	298.7	298.2	298.2	299.2	298.7	299.2	299.2	298.2
14	***	***	1.978	298.6	297.4	297.5	298.0	297.6	298.0	298.2	297.2	298.2	299.2	299.2	299.2	299.2
15	***	***	1.976	298.0	296.8	296.7	297.9	297.5	297.8	297.7	297.2	298.2	297.2	297.7	298.2	297.7
16	***	***	1.975	297.6	296.9	296.7	297.6	297.1	297.0	297.2	297.2	298.2	297.2	298.2	297.2	297.2
17	***	***	1.973	296.7	295.7	296.3	296.8	296.4	296.8	297.2	297.2	298.2	298.2	298.2	298.2	296.7
18	***	***	1.972	296.9	295.5	295.5	296.8	296.7	296.8	297.2	297.2	298.2	298.2	297.2	297.2	296.2
19	***	***	1.970	297.2	295.6	295.7	296.8	296.6	296.7	296.7	296.7	297.7	297.2	298.2	297.2	297.2
20	***	***	1.969	297.2	296.0	295.8	296.8	296.6	296.5	296.2	296.2	297.2	297.2	297.2	297.2	296.2
21	***	***	1.968	296.5	295.5	295.7	296.4	295.9	295.9	295.2	296.2	297.2	297.2	297.2	297.2	296.2
26	***	***	1.963	296.4	295.4	295.5	296.0	295.5	295.8	295.7	295.7	296.7	296.7	297.2	296.2	296.2
31	***	***	1.959	295.7	295.0	294.5	295.2	295.1	295.1	295.2	295.2	296.2	296.2	296.2	296.2	296.2
36	***	***	1.956	295.2	294.3	294.0	295.0	295.0	295.2	295.2	295.2	296.2	296.2	295.2	295.2	295.2
41	***	***	1.954	295.3	294.0	293.8	294.2	294.0	294.1	294.2	294.2	295.2	295.2	295.2	295.2	295.2
46	***	***	1.951	294.2	293.2	293.1	293.8	293.7	293.6	294.2	294.2	295.2	295.2	295.2	294.2	294.2
51	***	***	1.949	293.8	292.9	292.9	293.8	293.7	293.8	293.2	293.2	294.2	294.2	294.2	293.2	293.2
56	***	***	1.946	293.6	292.4	292.8	293.7	293.7	293.5	293.2	293.2	294.2	294.2	294.2	293.2	293.7
61	***	***	1.944	293.5	292.4	292.6	293.4	293.2	293.2	293.2	293.2	294.2	294.2	294.2	293.2	293.2
66	***	***	1.942	293.2	292.3	292.4	293.2	293.3	293.3	292.2	293.2	294.2	294.2	294.2	293.2	293.2
71	***	***	1.941	293.2	292.0	292.0	292.7	292.9	293.0	292.2	292.2	294.2	294.2	293.2	292.2	292.2
81	***	***	1.938	293.0	291.8	290.9	292.7	292.8	292.6	292.2	292.2	293.2	292.2	293.2	292.2	292.2
91	***	***	1.935	292.8	291.3	291.0	292.2	292.2	292.5	292.2	292.2	292.2	292.2	292.2	292.2	292.2
101	***	***	1.932	292.4	291.2	291.3	292.0	291.8	291.8	291.2	291.2	292.2	292.2	292.2	291.2	291.2
111	***	***	1.930	291.7	290.8	290.8	291.5	291.5	291.5	291.2	291.2	292.2	292.2	292.2	291.2	291.2
121	***	***	1.927	291.7	290.8	290.7	291.6	291.5	291.6	291.2	291.2	292.2	292.2	291.2	291.2	291.2
131	***	***	1.925	291.5	290.4	290.4	291.3	291.2	291.3	291.2	291.2	292.2	292.2	291.2	290.2	290.2
141	***	***	1.923	290.9	289.9	289.7	291.0	291.0	291.0	290.2	290.2	291.2	291.2	291.2	289.2	290.2
151	***	***	1.921	290.5	289.5	289.6	290.5	290.5	290.3	290.2	290.2	291.2	291.2	291.2	290.2	290.2
161	***	***	1.920	290.4	289.5	289.6	290.5	290.3	290.2	290.2	290.2	290.2	291.2	290.2	290.2	290.2
171	***	***	1.918	290.0	289.1	289.2	289.6	290.1	290.1	289.2	289.2	290.2	290.2	290.2	289.2	289.2
181	***	***	1.917	289.9	289.1	289.2	289.9	289.8	289.9	289.2	289.2	290.2	290.2	290.2	289.2	289.2
191	***	***	1.915	289.7	288.8	288.9	289.6	289.6	289.7	289.2	289.2	290.2	290.2	290.2	289.2	289.2
201	***	***	1.914	289.5	288.6	288.5	289.2	288.9	289.1	289.2	288.2	289.2	289.2	290.2	289.2	289.2

I	COORDINATES R (M)	THETA (DEG)	Z (M)
1	1.756	45	-0.586
2	1.756	45	-0.293
3	1.756	45	0.000
4	1.756	45	0.293
5	1.756	45	0.586
6	1.756	45	0.878
7	1.756	45	2.049
8	1.756	45	2.342
9	1.756	45	2.635
10	1.756	45	2.928
11	1.756	45	3.220
12	1.756	45	3.513
13	1.756	45	3.806

Table 5A — Scaling Run 233: Uncluttered 324–m^3 Chamber, Three 3.279-cm Nozzles

Time t (s)	Press Cyl P (atm)	T_s (K)	Chamber P (atm)	Chamber Absolute Temperatures (K) at Locations I 1	2	3	4	5	6	7	8	9	10	11	12	13
-5	***	***	1.000	285.6	284.5	284.5	285.5	285.4	285.4	285.2	285.2	286.2	286.2	286.2	285.2	285.2
-4	***	***	1.000	285.6	284.5	284.4	285.5	285.4	285.4	285.2	285.2	286.2	286.2	286.2	285.2	285.2
-3	***	***	1.000	285.6	284.5	284.4	285.5	285.4	285.4	285.2	285.2	286.2	286.2	286.2	285.2	285.2
-2	***	***	1.000	285.6	284.5	284.5	285.5	285.4	285.5	285.2	285.2	286.2	286.2	286.2	285.2	285.2
-1	***	***	1.000	285.6	284.5	284.5	285.5	285.4	285.4	285.2	285.2	286.2	286.2	286.2	285.2	285.2
0	.483	305.1	1.000	286.7	285.0	284.5	285.9	286.4	287.9	285.2	285.2	286.2	286.2	286.2	285.2	285.2
1	.497	262.4	1.060	292.6	290.0	287.9	289.6	291.2	292.4	287.2	288.2	290.2	289.2	289.2	288.2	288.2
2	.497	256.5	1.195	298.0	296.0	294.9	296.1	296.5	296.9	292.7	294.2	295.2	294.2	295.7	294.2	294.2
3	.490	254.1	1.312	301.2	299.6	298.7	299.7	300.5	299.9	296.2	297.2	298.2	297.2	298.2	297.2	297.2
4	.486	250.8	1.416	303.1	301.5	301.2	302.4	303.0	303.0	299.7	299.7	301.2	300.2	300.7	299.7	299.7
5	.483	247.7	1.511	304.5	303.0	302.3	303.8	303.9	304.1	302.2	302.2	302.2	302.2	302.2	301.2	302.2
6	.483	244.7	1.597	304.5	303.3	303.5	304.2	304.5	304.8	303.7	303.2	304.2	303.7	304.2	303.2	303.2
7	.476	243.3	1.676	305.4	303.8	303.8	304.2	304.6	305.3	304.2	304.2	305.2	304.2	304.2	302.2	303.2
8	.476	240.7	1.748	305.2	303.9	303.8	304.9	305.0	305.6	304.2	304.2	305.2	304.7	304.7	304.2	304.7
9	.476	237.9	1.815	305.4	303.6	304.0	304.6	304.7	305.2	304.2	303.2	304.2	304.2	304.2	304.2	304.2
10	.476	235.4	1.877	305.5	303.7	303.9	304.6	304.5	305.2	303.7	303.2	304.2	304.2	304.2	303.7	304.2
11	.429	231.7	1.934	304.3	302.7	303.4	304.2	304.7	304.6	303.2	303.2	304.2	304.2	304.2	304.2	304.2
12	.429	186.5	1.972	302.7	301.7	302.1	303.3	303.5	303.5	302.7	302.2	303.2	303.2	303.7	302.7	303.7
13	.429	169.7	1.979	302.8	301.5	301.9	302.8	302.5	302.5	302.2	302.2	303.2	303.2	303.2	302.2	303.2
14	***	***	1.978	302.8	301.6	301.8	302.4	302.0	302.0	302.2	302.2	303.2	302.7	303.2	302.2	302.2
15	***	***	1.976	302.3	301.2	301.2	302.2	301.9	301.8	302.2	301.2	302.2	302.2	302.2	302.2	302.2
16	***	***	1.974	301.7	300.4	300.5	301.4	300.8	300.7	300.7	300.7	302.2	302.2	302.2	302.2	301.7
17	***	***	1.973	301.0	299.6	299.5	300.8	300.4	300.6	300.2	300.2	302.2	302.2	302.2	302.2	302.2
18	***	***	1.971	300.5	299.3	299.2	300.0	299.5	300.0	300.2	300.2	302.2	302.2	302.2	302.2	301.2
19	***	***	1.970	300.1	298.7	299.0	300.2	300.2	300.3	300.2	300.2	302.2	301.2	302.2	302.2	301.2
20	***	***	1.969	300.0	299.3	299.3	300.3	300.2	299.6	300.2	300.2	301.2	301.2	302.2	301.2	300.7
21	***	***	1.968	300.6	299.5	299.5	300.3	299.9	299.8	300.2	300.2	301.2	301.2	301.2	301.2	300.2
26	***	***	1.963	299.7	298.6	298.7	300.0	300.0	300.0	299.2	300.2	301.2	301.2	301.2	300.2	300.2
31	***	***	1.960	299.0	298.1	298.3	299.5	299.3	299.3	298.7	299.2	300.2	300.2	299.7	299.2	298.2
36	***	***	1.956	298.5	297.8	297.9	298.9	299.0	299.1	298.2	298.2	299.2	300.2	300.2	299.2	298.2
41	***	***	1.954	298.5	297.2	297.5	298.5	298.5	298.6	298.2	298.2	299.2	299.2	299.2	298.2	298.7
46	***	***	1.951	298.5	297.4	297.5	298.5	298.4	298.3	297.2	297.2	299.2	299.2	299.2	298.2	298.2
51	***	***	1.949	298.2	297.2	297.3	298.1	298.0	297.7	297.2	297.2	298.7	299.2	299.2	298.2	298.2
56	***	***	1.947	297.9	296.7	296.8	297.7	297.8	298.0	297.2	297.2	298.2	298.2	298.2	296.2	298.2
61	***	***	1.945	297.8	296.5	296.7	297.5	297.8	297.8	297.2	297.2	298.2	298.2	298.2	295.7	297.2
66	***	***	1.944	298.0	296.4	296.4	297.3	297.3	297.5	297.2	297.2	298.2	298.2	297.2	295.2	297.2
71	***	***	1.942	297.8	296.6	296.7	297.0	297.2	297.4	297.2	297.2	298.2	298.2	297.2	295.2	297.2
81	***	***	1.940	297.4	296.2	296.2	297.4	297.2	297.2	297.2	296.2	297.2	297.2	297.2	294.2	296.2
91	***	***	1.937	296.8	295.9	296.0	297.1	297.1	296.9	296.2	296.2	297.2	297.2	296.2	295.2	296.2
101	***	***	1.935	296.3	295.2	295.6	296.7	296.7	296.5	296.2	295.2	297.2	296.2	296.2	294.2	296.2
111	***	***	1.933	296.4	294.9	294.5	295.6	295.8	295.9	296.2	295.2	297.2	296.2	296.2	295.2	295.2
121	***	***	1.931	296.1	294.9	294.8	295.8	296.0	295.8	295.2	295.2	296.2	296.2	296.2	295.2	295.2
131	***	***	1.929	296.2	295.0	295.0	295.7	295.6	295.7	295.2	295.2	296.2	296.2	296.2	295.2	295.2
141	***	***	1.927	295.9	294.7	294.6	295.3	295.5	295.5	295.2	295.2	296.2	296.2	296.2	295.2	295.2
151	***	***	1.926	295.8	294.5	294.5	294.8	295.2	295.2	295.2	295.2	296.2	296.2	296.2	295.2	295.2
161	***	***	1.924	295.4	294.3	294.3	295.1	295.0	294.8	295.2	295.2	296.2	296.2	296.2	295.2	295.2
171	***	***	1.923	295.1	293.5	294.2	295.0	295.0	294.7	295.2	294.2	295.2	295.2	295.2	294.2	294.2
181	***	***	1.921	294.7	293.6	293.8	295.0	295.0	294.6	294.2	294.2	295.2	295.2	295.2	294.2	294.2
191	***	***	1.920	294.6	293.4	293.0	294.5	294.7	294.5	294.2	294.2	295.2	295.2	295.2	293.2	294.2
201	***	***	1.919	294.5	293.1	293.1	294.2	294.4	294.5	294.2	293.2	295.2	295.2	295.2	293.2	293.2

COORDINATES

I	R (M)	THETA (DEG)	Z (M)
1	1.756	45	-0.386
2	1.756	45	-0.293
3	1.756	45	0.000
4	1.756	45	0.293
5	1.756	45	0.586
6	1.756	45	0.878
7	1.756	45	2.049
8	1.756	45	2.342
9	1.756	45	2.635
10	1.756	45	2.928
11	1.756	45	3.220
12	1.756	45	3.513
13	1.756	45	3.806

Table 6A — Scaling Run 234: Uncluttered 324–m^3 Chamber, Three 3.279-cm Nozzles

Time t (s)	Press Cyl P (atm)	T_c (K)	Chamber P (atm)	Chamber Absolute Temperatures (K) at Locations I 1	2	3	4	5	6	7	8	9	10	11	12	13
-5	***	***	1.001	281.9	280.9	280.9	281.9	281.8	281.8	281.2	281.2	282.2	282.2	282.2	282.2	281.2
-4	***	***	1.001	281.9	280.9	280.9	281.9	281.8	281.8	281.2	281.2	282.2	282.2	282.2	282.2	281.2
-3	***	***	1.001	281.9	280.9	280.9	281.8	281.8	281.8	281.2	281.2	282.2	282.2	282.2	282.2	281.2
-2	***	***	1.001	281.9	280.9	280.9	281.9	281.8	281.8	281.2	281.2	282.2	282.2	282.2	282.2	281.2
-1	***	***	1.001	282.0	280.9	280.9	281.9	281.8	281.8	281.2	281.2	282.2	282.2	282.2	282.2	281.2
094.456	277.9		1.001	283.4	281.9	281.2	282.7	283.3	283.6	281.2	281.2	282.2	282.2	282.2	282.2	281.2
182.014	256.8		1.089	289.5	288.1	286.8	288.1	289.3	290.7	285.2	286.7	287.2	286.2	287.2	286.2	285.7
274.735	252.8		1.219	295.5	293.6	292.7	294.2	295.0	295.2	290.2	290.2	292.2	291.2	292.2	292.2	292.2
370.367	249.7		1.299	298.6	297.1	296.6	297.3	297.7	298.0	293.2	293.2	294.2	294.2	295.2	295.2	295.2
464.480	247.2		1.405	300.1	298.7	298.5	299.5	299.8	299.6	296.7	296.2	296.7	296.7	297.2	296.7	296.2
559.143	244.1		1.503	300.8	299.7	299.7	300.6	300.8	300.6	298.2	297.2	299.2	298.2	299.2	298.2	298.2
654.480	242.1		1.593	301.7	300.3	300.2	301.5	301.8	301.7	299.2	298.2	300.2	299.7	300.2	299.2	299.2
750.293	239.4		1.673	302.2	300.5	301.0	302.0	302.0	301.5	300.2	300.2	300.2	300.2	301.2	300.2	300.2
846.612	236.2		1.747	301.3	300.0	300.8	301.5	301.4	301.7	300.2	300.2	301.2	301.2	301.2	301.7	302.2
943.238	234.1		1.817	301.7	300.1	300.3	301.3	301.7	301.8	301.2	301.2	302.2	302.2	302.2	301.2	302.2
1040.201	232.4		1.879	301.0	299.8	300.2	301.4	302.0	301.6	300.7	300.2	301.2	301.2	301.2	300.7	301.7
1137.673	219.6		1.937	301.2	299.8	299.9	301.0	300.9	300.7	300.2	300.2	301.2	301.2	301.2	300.2	301.2
1238.476	171.2		1.966	300.3	299.5	299.5	300.4	300.2	300.0	300.2	300.2	301.2	301.2	301.2	300.2	301.2
1338.537	163.7		1.974	299.3	298.7	299.0	299.5	299.0	298.8	299.7	299.2	300.2	300.2	300.2	299.7	299.7
14	***	***	1.974	298.5	297.7	297.8	298.5	298.8	298.9	299.2	299.2	300.2	299.2	300.2	299.2	299.2
15	***	***	1.972	298.1	296.9	296.7	296.8	297.5	298.7	298.2	298.7	299.7	299.7	299.7	299.2	299.2
16	***	***	1.971	297.8	296.9	296.5	297.6	297.7	298.0	297.2	298.2	298.2	298.2	298.2	298.2	298.2
17	***	***	1.969	297.0	296.1	296.2	296.9	297.5	297.8	297.2	297.2	298.2	298.2	298.2	298.2	297.2
18	***	***	1.968	296.7	295.5	295.7	296.5	296.9	297.2	297.2	297.2	298.2	298.2	298.2	298.2	298.2
19	***	***	1.966	296.9	295.8	295.5	296.2	296.3	296.8	297.7	297.2	298.2	298.2	298.2	297.7	297.2
20	***	***	1.965	297.3	296.2	295.5	296.7	296.7	296.8	297.2	297.2	297.2	297.2	297.2	297.2	296.2
21	***	***	1.965	297.0	296.0	296.0	296.8	296.5	296.6	297.2	296.2	297.2	297.2	297.2	296.2	296.2
26	***	***	1.960	295.7	295.1	295.3	296.5	296.7	296.7	296.2	296.2	297.2	297.2	297.2	296.2	296.2
31	***	***	1.956	295.9	295.0	295.0	296.2	296.2	296.4	296.2	296.2	297.2	297.2	297.2	296.2	295.7
36	***	***	1.953	295.9	294.6	295.1	296.0	295.7	295.9	295.2	295.2	296.2	296.2	296.2	295.2	295.2
41	***	***	1.951	295.6	294.0	294.1	295.2	295.2	295.9	295.2	295.2	296.2	296.2	296.2	295.2	294.2
46	***	***	1.949	295.0	294.5	294.7	295.2	295.0	295.2	295.2	295.2	296.2	296.2	296.2	295.2	294.2
51	***	***	1.947	295.0	294.1	294.2	294.7	294.5	294.9	295.2	295.2	295.7	296.2	296.2	295.2	294.2
56	***	***	1.945	294.6	293.3	293.5	294.5	294.5	294.7	295.2	294.2	295.2	295.2	295.2	295.2	294.2
61	***	***	1.943	294.4	293.1	292.7	293.3	293.4	294.3	294.2	294.2	295.2	295.2	295.2	294.2	294.2
66	***	***	1.941	294.2	292.6	292.2	293.1	293.2	293.8	294.2	293.2	294.2	294.2	295.2	293.2	294.2
71	***	***	1.940	294.1	291.9	291.7	292.6	292.8	293.8	293.2	292.2	294.2	294.2	294.2	293.2	293.2
81	***	***	1.937	293.5	291.7	291.7	292.7	292.9	293.1	293.2	292.2	293.2	293.2	293.7	292.2	293.2
91	***	***	1.935	293.1	291.7	291.9	292.4	292.7	292.9	292.2	292.2	293.2	293.2	293.2	291.2	292.2
101	***	***	1.932	293.0	291.8	291.8	292.7	292.7	292.8	292.2	292.2	293.2	293.2	293.2	292.2	292.2
111	***	***	1.930	292.8	291.9	292.0	292.8	292.9	292.9	292.2	292.2	293.2	293.2	292.2	291.2	292.2
121	***	***	1.928	292.6	291.6	291.7	292.6	292.7	292.7	292.2	291.2	292.2	292.2	292.2	291.2	292.2
131	***	***	1.926	292.4	291.3	291.2	292.2	292.2	292.4	292.2	291.2	292.2	292.2	292.2	290.2	291.2
141	***	***	1.925	292.3	291.1	290.9	291.3	291.8	291.9	291.2	291.2	292.2	292.2	291.2	289.2	291.2
151	***	***	1.923	292.1	291.0	291.0	291.6	291.6	291.7	291.2	291.2	292.2	292.2	291.2	289.2	291.2
161	***	***	1.921	291.9	290.9	290.9	291.6	291.7	291.6	291.2	290.2	292.2	292.2	291.2	290.2	291.2
171	***	***	1.920	291.5	290.4	290.5	291.0	291.2	291.4	290.7	290.2	291.2	291.2	291.2	290.2	290.2
181	***	***	1.918	291.3	290.1	289.9	290.7	290.9	291.0	290.2	290.2	291.2	291.2	291.2	290.2	290.2
191	***	***	1.917	290.8	289.7	289.6	290.4	290.4	290.8	290.2	290.2	291.2	291.2	291.2	289.2	290.2
201	***	***	1.916	290.7	289.4	289.4	290.3	290.1	290.2	290.2	290.2	291.2	291.2	291.2	289.2	290.2

COORDINATES

I	R (M)	THETA (DEG)	Z (M)
1	1.756	45	-0.586
2	1.756	45	-0.293
3	1.756	45	0.000
4	1.756	45	0.293
5	1.756	45	0.586
6	1.756	45	0.878
7	1.756	45	2.049
8	1.756	45	2.342
9	1.756	45	2.635
10	1.756	45	2.928
11	1.756	45	3.220
12	1.756	45	3.513
13	1.756	45	3.806

Table 7A — Scaling Run 235: Uncluttered 324–m^3 Chamber, Three 3.279-cm Nozzles

Time t (s)	Press Cyl P (atm)	T_s (K)	Chamber P (atm)	Chamber Absolute Temperatures (K) at Locations l 1	2	3	4	5	6	7	8	9	10	11	12	13
-5	***	***	1.001	283.9	283.0	282.9	283.8	283.8	283.9	283.2	283.2	283.2	283.2	283.2	283.2	283.2
-4	***	***	1.001	283.9	283.0	282.9	283.8	283.8	283.9	283.2	283.2	283.2	283.2	283.2	283.2	283.2
-3	***	***	1.001	283.9	283.0	282.9	283.8	283.8	283.9	283.2	283.2	283.2	283.2	283.2	283.2	283.2
-2	***	***	1.001	283.9	283.0	282.9	283.8	283.8	283.9	283.2	283.2	283.2	283.2	283.2	283.2	283.2
-1	***	***	1.001	283.9	283.0	282.9	283.8	283.8	283.9	283.2	283.2	283.7	283.2	283.2	283.2	283.2
094.653	300.8		1.001	284.5	283.3	282.9	283.9	284.3	285.0	283.2	283.2	284.2	283.2	283.2	283.2	283.2
183.367	268.2		1.072	291.8	289.5	288.0	289.7	290.7	291.8	286.2	288.2	288.2	287.2	288.7	286.7	287.2
276.313	256.3		1.202	297.1	295.6	295.2	296.1	296.9	297.1	293.2	292.2	293.2	293.2	295.2	293.2	292.2
369.867	254.9		1.318	300.2	299.2	298.8	299.4	299.8	299.4	295.2	295.7	296.2	296.2	297.2	296.7	295.7
463.959	253.8		1.424	302.2	300.8	300.6	301.6	302.1	301.8	297.2	298.2	299.2	298.2	299.2	298.2	297.2
558.772	248.5		1.519	303.1	301.9	301.8	302.5	302.8	303.0	300.7	301.2	302.2	301.2	301.7	300.2	300.7
654.061	245.7		1.606	304.0	303.1	301.9	302.6	302.7	302.4	302.2	302.2	302.2	302.2	302.2	302.2	302.2
751.306	243.1		1.659	303.4	302.4	302.4	303.1	303.5	303.3	302.2	302.2	302.2	302.2	302.2	301.2	302.2
847.486	240.2		1.733	304.5	302.7	302.9	303.8	303.7	303.5	302.2	301.7	302.2	302.2	303.2	302.2	303.2
943.980	237.1		1.802	304.0	302.7	302.6	303.8	303.6	303.8	301.2	301.2	302.2	302.2	303.2	303.2	303.2
1040.895	235.2		1.865	304.4	303.1	302.7	303.8	303.5	303.3	301.7	301.7	302.2	302.2	302.2	301.7	302.2
1138.020	231.5		1.923	303.4	302.2	303.1	303.6	303.3	302.7	303.2	301.2	302.2	302.2	302.2	301.2	302.2
1237.160	182.8		1.964	302.5	301.3	301.7	302.2	302.0	301.9	300.7	300.7	301.7	301.7	301.7	300.7	300.7
1337.680	164.5		1.974	301.5	300.2	300.9	301.8	301.6	300.7	300.2	300.2	301.2	301.2	301.2	301.2	300.2
14	***	***	1.973	301.4	300.1	300.3	301.2	301.0	300.9	300.2	300.2	301.2	301.2	301.2	301.2	300.7
15	***	***	1.971	301.2	300.0	299.0	300.4	299.9	300.0	300.2	300.2	300.2	301.2	301.2	300.2	300.2
16	***	***	1.970	299.7	298.9	298.6	299.5	299.0	299.3	299.2	299.2	300.2	300.2	301.2	300.2	300.2
17	***	***	1.968	299.0	297.7	297.7	298.6	298.7	299.2	299.2	299.2	300.2	300.2	300.7	300.2	299.7
18	***	***	1.967	298.7	297.8	297.7	299.1	299.1	299.5	299.2	299.2	300.2	300.2	300.2	299.2	299.2
19	***	***	1.966	298.6	297.8	298.0	299.1	299.5	299.5	299.2	299.2	300.2	300.2	300.2	299.2	299.2
20	***	***	1.964	298.6	297.5	297.7	299.0	299.5	299.5	299.2	299.2	300.2	300.2	300.2	299.2	298.2
21	***	***	1.963	298.2	297.4	298.1	299.1	299.4	299.3	299.2	299.2	299.7	299.2	299.7	299.2	298.2
26	***	***	1.959	299.0	297.9	297.9	298.4	298.5	298.5	298.2	297.2	298.2	298.2	298.2	297.7	297.2
31	***	***	1.955	298.5	297.3	296.8	297.4	297.0	297.1	297.2	297.2	297.2	298.2	298.2	297.2	297.2
36	***	***	1.952	298.0	296.8	296.2	296.9	296.8	297.0	297.2	297.2	297.2	297.2	297.2	297.2	296.2
41	***	***	1.949	297.0	296.0	295.9	296.8	296.7	297.1	296.2	297.2	297.2	297.2	297.2	297.2	296.2
46	***	***	1.947	296.8	295.9	296.0	296.7	296.7	296.7	296.2	296.2	297.2	297.2	297.2	296.2	296.2
51	***	***	1.945	296.8	295.8	295.9	296.6	296.5	296.7	296.2	296.2	297.2	297.2	297.2	294.7	296.2
56	***	***	1.943	296.3	295.5	295.5	296.5	296.2	295.7	295.2	295.2	296.2	296.2	296.2	294.2	296.2
61	***	***	1.941	296.3	295.2	295.2	296.2	296.2	295.7	295.2	295.2	296.2	296.2	296.2	294.2	295.2
66	***	***	1.940	296.5	295.2	295.2	296.0	295.8	295.7	295.2	294.2	296.2	295.2	295.2	293.2	295.2
71	***	***	1.938	296.0	295.2	295.2	295.8	294.9	295.0	294.2	294.2	295.2	295.2	295.2	293.2	295.2
81	***	***	1.936	295.7	294.8	293.7	294.6	294.5	294.8	294.2	294.2	296.2	295.2	295.2	293.2	295.2
91	***	***	1.933	295.2	293.8	293.4	294.5	293.9	294.0	294.2	294.2	295.2	295.2	295.2	292.2	294.2
101	***	***	1.931	294.9	293.6	293.5	294.2	294.3	294.5	294.2	294.2	295.2	295.2	295.2	294.2	294.2
111	***	***	1.929	294.8	293.6	293.7	294.0	294.4	294.8	294.2	294.2	294.2	294.2	294.2	293.2	294.2
121	***	***	1.927	294.6	293.7	293.5	293.9	293.8	294.1	293.2	292.2	294.2	294.2	294.2	292.7	293.2
131	***	***	1.925	294.5	293.3	293.2	293.9	293.8	294.1	293.2	293.2	294.2	294.2	294.2	292.2	293.2
141	***	***	1.924	293.8	293.2	293.3	294.1	294.1	293.9	293.2	293.2	294.2	294.2	293.2	292.2	293.2
151	***	***	1.922	293.8	292.9	293.2	294.0	293.9	293.9	293.2	293.2	294.2	294.2	293.2	292.2	293.2
161	***	***	1.921	293.6	292.6	292.6	293.1	293.7	293.8	293.2	292.2	293.2	293.2	293.2	292.2	293.2
171	***	***	1.919	293.4	292.2	291.9	293.1	293.1	293.3	292.2	292.2	293.2	293.2	293.2	292.2	292.2
181	***	***	1.918	293.2	292.4	292.4	293.1	293.3	293.3	292.2	292.2	293.2	293.2	292.2	291.2	292.2
191	***	***	1.917	293.1	291.7	291.7	292.9	292.8	292.6	292.2	292.2	292.2	293.2	292.2	291.2	292.2
201	***	***	1.915	292.9	291.4	291.7	292.6	292.4	292.4	292.2	292.2	292.2	292.2	292.2	291.2	292.2

COORDINATES

l	R (M)	THETA (DEG)	Z (M)
1	1.756	45	-0.586
2	1.756	45	-0.293
3	1.756	45	0.000
4	1.756	45	0.293
5	1.756	45	0.586
6	1.756	45	0.878
7	1.756	45	2.049
8	1.756	45	2.342
9	1.756	45	2.635
10	1.756	45	2.928
11	1.756	45	3.220
12	1.756	45	3.513
13	1.756	45	3.806

Table 8A — Scaling Run 236: Uncluttered 324–m^3 Chamber, Three 3.279-cm Nozzles

Time t (s)	Press Cyl P (atm)	T_s (K)	Chamber P (atm)	Chamber Absolute Temperatures (K) at Locations I 1	2	3	4	5	6	7	8	9	10	11	12	13
-5	***	***	.999	290.1	288.8	288.8	289.8	289.8	289.8	289.2	288.7	290.2	290.2	289.2	289.2	289.2
-4	***	***	.999	290.1	288.8	288.8	289.8	289.8	289.9	289.2	289.2	290.2	290.2	289.2	289.2	289.2
-3	***	***	.999	290.0	288.9	288.8	289.8	289.8	289.9	289.2	288.2	290.2	290.2	289.2	289.2	289.2
-2	***	***	.999	290.0	288.9	288.8	289.8	289.8	289.9	289.2	289.2	290.2	290.2	289.2	289.2	289.2
-1	***	***	.999	290.1	288.9	288.8	289.8	289.8	289.9	289.2	289.2	290.2	290.2	289.2	289.2	289.2
093.816	286.3		.999	292.8	291.2	290.0	291.7	292.2	293.0	289.2	289.2	290.2	290.2	290.2	289.2	289.2
177.442	266.8		1.086	300.4	298.2	296.2	298.2	299.5	300.3	293.2	294.2	294.7	294.2	295.2	293.7	293.7
272.673	265.1		1.219	303.9	302.4	301.3	302.6	302.7	302.9	299.2	299.2	301.2	300.2	301.2	300.2	299.2
366.622	261.7		1.334	307.2	305.2	305.1	305.8	306.3	306.6	302.2	301.7	303.7	303.7	304.7	303.7	303.7
461.279	259.8		1.441	309.7	307.6	307.9	308.7	308.5	308.4	306.2	306.2	307.2	306.2	307.2	306.2	306.2
558.027	257.2		1.506	310.3	308.9	308.9	309.7	309.6	309.5	308.2	306.2	308.2	308.2	308.2	308.2	307.2
653.524	253.2		1.594	311.3	309.6	308.8	310.0	310.1	310.0	307.2	307.7	308.2	308.7	308.7	308.7	308.2
749.517	249.5		1.675	311.3	309.8	309.8	310.5	310.0	310.5	308.2	308.2	310.2	309.2	310.2	309.2	309.2
845.905	247.1		1.749	310.2	310.0	310.1	311.1	311.3	311.0	309.2	308.2	308.7	308.7	308.7	308.7	309.2
942.592	244.4		1.818	311.0	309.5	309.6	310.4	310.3	309.4	309.2	308.2	310.2	309.2	309.2	309.2	309.2
1039.646	241.7		1.881	310.5	309.3	309.9	310.5	310.0	310.2	308.7	308.7	309.7	310.2	310.2	309.7	309.7
1137.857	236.8		1.937	309.8	308.9	309.2	309.8	309.8	310.2	308.2	308.2	309.2	309.2	309.2	308.2	309.2
1238.388	176.7		1.964	309.0	307.9	308.0	308.7	308.7	308.3	307.2	307.2	308.2	308.2	308.2	308.2	308.2
1338.514	165.8		1.969	307.6	306.9	307.3	308.1	308.0	308.0	306.7	307.2	307.7	307.2	307.7	306.7	307.2
14	***	***	1.968	306.3	305.5	306.5	307.5	306.9	306.8	306.2	306.2	307.2	307.2	307.2	306.2	307.2
15	***	***	1.966	305.9	304.7	305.9	307.1	306.7	306.4	306.2	306.2	307.2	307.2	307.2	306.2	306.2
16	***	***	1.964	306.1	305.0	305.7	306.6	306.4	306.4	305.2	305.2	307.2	307.2	307.2	306.2	306.2
17	***	***	1.963	306.1	304.8	305.3	306.0	305.6	305.8	305.2	305.2	306.7	306.2	307.2	306.2	306.2
18	***	***	1.961	305.9	304.4	304.6	305.5	305.3	305.6	305.2	305.2	306.2	306.2	306.2	306.2	306.2
19	***	***	1.960	305.5	304.0	304.1	305.2	305.0	305.2	305.2	305.2	306.2	306.2	306.2	305.7	305.7
20	***	***	1.958	305.0	303.8	304.0	305.0	304.9	305.2	305.2	304.2	306.2	306.2	306.2	305.2	305.2
21	***	***	1.957	305.0	303.8	303.4	304.5	304.7	305.1	304.2	304.2	306.2	306.2	306.2	305.2	305.2
26	***	***	1.952	305.0	304.0	303.7	304.6	304.5	304.2	303.2	303.2	304.2	305.2	305.2	304.2	303.7
31	***	***	1.949	304.5	303.4	303.0	303.8	303.8	303.7	303.2	304.2	305.2	305.2	305.2	304.2	304.2
36	***	***	1.946	304.2	303.1	303.1	303.8	303.8	304.0	303.2	303.2	304.7	304.2	304.2	303.2	304.2
41	***	***	1.943	303.9	302.6	302.6	303.5	303.5	303.9	303.2	303.2	304.2	304.2	304.2	303.2	303.2
46	***	***	1.941	303.5	302.4	302.4	303.1	303.1	303.2	302.2	302.2	303.2	303.2	303.2	303.2	303.2
51	***	***	1.939	302.6	301.8	301.8	302.7	302.7	302.9	302.2	302.2	303.2	303.2	303.2	302.2	302.2
56	***	***	1.936	302.6	301.5	301.6	302.5	302.4	302.7	302.2	301.2	303.2	303.2	303.2	302.2	302.2
61	***	***	1.935	302.6	301.2	301.0	301.5	302.4	302.9	301.2	301.2	303.2	303.2	303.2	302.2	302.2
66	***	***	1.933	302.4	300.9	300.2	300.5	302.2	302.2	301.2	301.2	302.2	302.2	302.2	301.2	301.2
71	***	***	1.932	302.4	301.1	300.8	301.6	302.2	302.3	301.2	301.2	302.2	302.2	301.2	301.2	301.2
81	***	***	1.929	302.2	301.2	301.0	302.1	302.1	302.2	301.2	301.2	302.2	302.2	301.2	299.7	301.2
91	***	***	1.926	302.3	300.8	300.7	301.4	301.6	301.8	301.2	300.2	301.2	302.2	301.2	300.2	300.2
101	***	***	1.924	301.7	300.4	300.3	301.3	301.5	301.6	300.2	299.7	301.2	301.2	301.2	299.2	300.2
111	***	***	1.922	301.2	299.5	300.1	301.2	301.2	301.0	300.2	299.2	300.2	301.2	300.2	299.2	300.2
121	***	***	1.920	300.9	299.0	300.0	300.9	301.0	301.1	300.2	300.2	300.2	300.2	300.2	299.2	300.2
131	***	***	1.919	300.5	299.1	299.8	300.8	300.9	300.9	300.2	300.2	300.2	300.2	300.2	299.2	300.2
141	***	***	1.917	300.5	299.1	299.1	300.2	300.5	300.9	300.2	299.2	300.2	300.2	300.2	299.2	299.2
151	***	***	1.915	300.4	299.0	299.0	299.9	300.3	300.6	299.2	299.2	300.2	300.2	300.2	299.2	299.2
161	***	***	1.913	300.2	298.9	299.0	299.9	299.5	299.8	299.2	299.2	300.2	300.2	300.2	298.2	299.2
171	***	***	1.912	300.1	298.8	298.8	299.7	299.6	299.7	299.2	298.2	300.2	300.2	300.2	299.2	299.2
181	***	***	1.910	299.9	298.7	298.6	299.5	299.6	299.5	299.2	298.2	300.2	299.2	299.2	299.2	299.2
191	***	***	1.909	299.7	298.5	298.2	299.4	299.5	299.5	299.2	298.2	299.2	299.2	299.2	298.2	298.2
201	***	***	1.908	299.5	298.1	298.0	299.1	298.7	299.1	298.2	298.2	299.2	299.2	299.2	298.2	298.2

COORDINATES I	R (M)	THETA (DEG)	Z (M)
1	1.756	45	-0.586
2	1.756	45	-0.293
3	1.756	45	0.000
4	1.756	45	0.293
5	1.756	45	0.586
6	1.756	45	0.878
7	1.756	45	2.049
8	1.756	45	2.342
9	1.756	45	2.635
10	1.756	45	2.928
11	1.756	45	3.220
12	1.756	45	3.513
13	1.756	45	3.806

Table 9A — Scaling Run 237: Uncluttered 324–m^3 Chamber, Three 3.279-cm Nozzles

Time t (s)	Press Cyl P (atm)	T_s (K)	Chamber P (atm)	Chamber Absolute Temperatures (K) at Locations I 1	2	3	4	5	6	7	8	9	10	11	12	13
-5	***	***	.979	281.8	280.8	280.9	281.9	281.8	281.6	281.2	281.2	282.2	282.2	282.2	282.2	281.2
-4	***	***	.979	281.9	280.6	280.9	281.9	281.7	281.7	281.2	281.2	282.2	282.2	282.2	282.2	281.2
-3	***	***	.979	281.8	280.8	280.9	281.9	281.8	281.7	281.2	281.2	282.2	282.2	282.2	282.2	281.2
-2	***	***	.979	281.8	280.8	280.9	281.9	281.8	281.6	281.2	281.2	282.2	282.2	282.2	282.2	281.2
-1	***	***	.979	283.3	280.9	282.4	281.7	293.1	283.7	281.2	281.2	282.2	282.2	282.2	282.2	281.2
0	.503	253.6	1.025	289.4	283.4	277.2	284.7	288.6	289.4	283.2	265.7	285.7	284.7	283.7	284.2	262.2
1	.503	249.9	1.147	294.4	288.0	277.9	290.3	292.9	293.2	288.2	291.2	291.2	290.2	290.2	275.2	266.2
2	.497	247.3	1.260	298.6	291.7	279.1	292.2	295.5	295.6	292.2	294.2	294.7	293.7	293.7	280.7	268.7
3	.497	244.7	1.363	299.7	292.4	279.5	295.3	297.5	296.9	295.2	296.2	298.2	297.2	294.2	280.2	293.2
4	.490	242.4	1.456	301.3	294.5	279.4	296.4	298.6	298.5	297.7	298.2	299.2	298.7	297.2	280.7	295.7
5	.490	240.7	1.541	301.8	296.7	279.6	298.1	299.8	299.5	298.2	299.2	300.2	300.2	298.2	281.2	296.2
6	.486	238.5	1.618	302.2	296.8	280.6	299.2	300.0	300.7	297.7	299.2	300.7	300.7	298.7	281.7	295.2
7	.483	236.0	1.690	302.3	297.8	280.9	300.1	301.1	300.4	298.2	298.2	300.2	300.2	298.2	282.2	295.2
8	.483	232.5	1.756	302.3	296.8	280.3	299.3	299.7	299.4	298.7	299.2	300.7	300.7	298.2	281.2	298.7
9	.476	230.1	1.818	301.8	297.7	280.3	299.9	299.5	298.4	298.2	299.2	301.2	300.2	298.2	282.2	298.2
10	.456	228.4	1.874	301.4	297.6	279.7	298.8	299.5	299.5	298.2	298.7	300.2	300.2	297.2	281.2	298.2
11	.435	200.1	1.923	300.8	297.4	281.4	299.0	299.9	299.8	298.2	298.2	299.2	299.2	297.2	280.2	297.2
12	.435	161.4	1.937	299.9	298.2	290.4	295.7	299.1	299.0	297.7	298.7	300.2	300.2	297.2	286.2	297.2
13	.435	165.1	1.938	298.5	297.6	295.2	297.8	298.5	298.3	298.2	298.2	300.2	299.2	298.2	292.2	298.2
14	***	***	1.937	298.0	296.5	295.1	296.9	297.2	297.3	297.7	298.2	299.2	299.2	298.7	295.2	298.2
15	***	***	1.935	297.9	296.5	295.5	297.2	297.1	296.8	297.2	298.2	299.2	299.2	299.2	297.2	298.2
16	***	***	1.934	297.6	296.4	295.9	297.4	297.2	297.1	297.2	297.7	298.7	298.2	298.2	297.2	298.2
17	***	***	1.933	297.4	296.4	296.0	297.3	297.1	297.0	296.2	297.2	298.2	298.2	298.2	296.2	298.2
18	***	***	1.931	297.3	296.1	295.9	297.3	297.1	296.8	297.2	297.2	298.2	298.2	298.2	297.2	297.2
19	***	***	1.930	297.1	295.8	295.6	296.9	296.6	296.5	297.2	297.2	298.2	298.2	298.2	297.2	297.2
20	***	***	1.929	296.8	295.5	295.2	296.6	296.4	296.3	296.7	296.7	297.7	297.7	298.2	296.2	297.2
21	***	***	1.928	296.7	295.5	295.2	296.4	296.1	296.5	296.2	296.2	297.2	297.2	298.2	296.2	297.2
26	***	***	1.924	296.0	295.0	294.8	296.0	295.7	295.6	295.2	295.7	297.2	297.2	297.2	296.2	295.7
31	***	***	1.921	295.2	294.4	294.5	295.6	295.5	295.4	295.2	295.2	297.2	297.2	297.2	296.2	296.2
36	***	***	1.918	295.0	293.9	294.2	294.8	294.8	294.7	295.2	295.2	296.2	296.2	297.2	292.2	296.2
41	***	***	1.916	294.7	293.9	293.5	294.8	294.9	294.7	295.2	295.2	295.2	295.2	295.2	291.2	295.2
46	***	***	1.914	294.5	293.5	293.0	294.2	294.7	294.6	295.2	294.2	295.2	295.2	295.2	290.2	295.2
51	***	***	1.912	294.5	293.3	292.6	293.1	293.4	293.5	294.2	293.2	294.2	294.2	294.2	289.2	294.2
56	***	***	1.910	294.0	292.8	292.4	292.9	293.0	292.5	292.7	292.2	293.2	293.7	294.2	290.2	294.2
61	***	***	1.908	293.8	292.6	291.7	292.4	292.5	292.0	292.2	291.2	294.2	294.2	294.2	290.2	294.2
66	***	***	1.906	293.6	292.4	290.3	292.5	292.4	291.9	292.2	291.2	293.2	293.2	293.2	289.2	292.2
71	***	***	1.905	293.0	291.5	290.6	292.4	292.4	292.0	292.2	291.2	293.2	293.2	293.2	289.2	292.2
81	***	***	1.902	292.2	291.1	291.3	292.3	292.2	292.4	292.2	292.2	293.2	293.2	293.2	291.2	292.2
91	***	***	1.900	292.4	291.4	291.6	292.5	292.6	292.6	292.2	292.2	293.2	293.2	293.2	291.2	292.2
101	***	***	1.897	291.9	291.0	290.8	292.0	292.2	292.4	292.2	292.2	292.2	293.2	292.2	290.2	292.2
111	***	***	1.895	291.7	290.6	290.4	291.4	291.4	291.1	291.2	291.2	292.2	292.2	292.2	291.2	291.2
121	***	***	1.893	291.5	290.5	290.3	291.1	291.1	290.9	291.2	291.2	292.2	292.2	292.2	290.2	291.2
131	***	***	1.891	291.0	289.9	289.9	291.0	290.9	290.6	290.2	290.2	292.2	291.2	291.2	289.2	291.2
141	***	***	1.890	290.8	289.6	289.6	290.7	290.6	290.6	290.2	290.2	291.2	291.2	291.2	289.2	291.2
151	***	***	1.888	290.5	289.5	289.3	290.2	290.3	290.4	290.2	290.2	291.2	291.2	291.2	290.2	290.2
161	***	***	1.886	290.1	289.1	288.8	289.7	289.8	289.7	290.2	290.2	291.2	291.2	291.2	289.2	290.2
171	***	***	1.885	289.7	288.8	288.6	289.6	289.5	289.6	289.2	289.2	291.2	290.2	290.2	289.2	290.2
181	***	***	1.883	289.5	288.0	288.3	289.5	289.2	289.4	289.2	289.2	290.2	290.2	290.2	288.2	289.2
191	***	***	1.882	289.3	288.3	287.7	289.0	288.9	288.9	289.2	289.2	290.2	290.2	290.2	288.2	289.2
201	***	***	1.880	289.2	288.2	287.9	288.9	288.8	288.8	289.2	288.7	290.2	289.2	290.2	289.2	289.2

COORDINATES

I	R (M)	THETA (DEG)	Z (M)
1	0.000	00	-0.586
2	0.000	00	-0.293
3	0.000	00	0.000
4	0.000	00	0.293
5	0.000	00	0.586
6	0.000	00	0.878
7	0.000	00	2.049
8	0.000	00	2.342
9	0.000	00	2.635
10	0.000	00	2.928
11	0.000	00	3.220
12	0.000	00	3.513
13	0.000	00	3.806

Table 10A — Scaling Run 238: Uncluttered 324–m^3 Chamber, Three 3.279-cm Nozzles

Time t (s)	Press Cyl P (atm)	T_c (K)	Chamber P (atm)	Chamber Absolute Temperatures (K) at Locations I 1	2	3	4	5	6	7	8	9	10	11	12	13
-5	***	***	.985	280.1	279.1	279.1	280.0	280.0	280.0	280.2	280.2	280.2	280.2	280.2	280.2	279.2
-4	***	***	.985	280.2	279.1	279.1	280.0	280.0	280.0	280.2	279.2	280.2	280.2	280.2	280.2	279.2
-3	***	***	.985	280.1	279.1	279.1	280.0	280.0	280.0	280.2	279.7	280.7	280.2	280.2	280.2	279.2
-2	***	***	.985	280.1	279.2	279.1	280.0	280.0	280.0	280.2	280.2	280.2	280.2	280.2	280.2	279.2
-1	***	***	.985	280.1	279.1	279.1	280.0	280.0	279.9	280.2	279.2	280.7	280.2	280.2	280.2	279.2
091.796	277.0		.986	281.8	279.4	281.3	280.2	281.4	281.9	280.2	280.2	280.2	280.2	281.2	280.2	280.2
176.061	257.9		1.052	289.1	284.2	275.5	283.5	287.5	288.1	283.7	285.2	286.2	285.2	284.2	280.2	281.2
272.122	255.0		1.178	294.7	289.5	277.7	289.6	292.5	292.3	289.2	290.2	291.2	290.2	290.2	279.2	286.2
366.344	252.7		1.291	297.5	291.1	279.7	293.2	295.5	296.2	293.2	293.7	294.2	293.7	291.2	280.7	290.2
461.041	249.8		1.395	299.3	292.8	280.4	295.9	297.5	297.0	296.2	296.2	297.2	297.2	296.2	281.2	293.2
556.344	245.5		1.488	301.4	295.5	280.6	296.5	297.7	297.4	297.7	297.7	299.2	298.7	297.2	281.2	294.7
652.034	243.1		1.574	301.5	296.0	280.5	298.5	299.3	298.5	298.2	298.2	300.2	300.2	297.2	282.2	294.2
748.119	239.3		1.651	301.4	296.9	279.6	298.2	300.2	300.5	298.2	299.2	300.2	300.2	297.7	281.2	293.7
844.694	237.5		1.722	301.7	296.2	280.9	298.4	300.1	298.6	298.2	300.2	301.2	301.2	298.2	281.2	296.2
942.585	234.7		1.766	301.9	296.7	279.4	298.2	299.4	298.5	300.2	298.2	301.2	300.2	297.2	280.2	296.2
1039.592	232.6		1.828	301.2	295.1	279.5	298.4	298.8	298.1	298.2	298.2	299.7	299.7	297.7	280.2	296.7
1136.871	228.7		1.885	300.0	296.2	279.9	298.6	298.9	297.9	297.2	298.2	300.2	299.2	296.2	281.2	298.2
1237.422	180.3		1.929	299.5	292.2	280.0	297.7	297.7	298.1	297.2	297.7	299.7	299.7	296.2	279.7	295.2
1337.027	159.2		1.941	297.8	293.0	290.8	298.3	298.4	298.2	296.2	297.2	298.2	298.2	296.2	286.2	289.2
14	***	***	1.941	297.4	295.2	294.9	297.8	297.7	297.2	297.7	297.7	298.2	298.2	297.7	292.2	294.2
15	***	***	1.939	296.8	295.5	295.2	297.3	296.9	296.4	297.2	297.2	298.2	298.2	298.2	296.2	296.2
16	***	***	1.938	296.4	295.0	295.0	296.5	296.2	296.0	297.2	297.2	298.2	298.2	298.2	296.7	296.7
17	***	***	1.936	296.4	295.1	295.1	296.2	295.7	295.6	297.2	297.2	298.2	298.2	298.2	296.2	296.2
18	***	***	1.935	296.0	295.2	295.2	296.2	295.9	295.8	297.2	296.2	298.2	298.2	298.2	296.2	296.2
19	***	***	1.934	295.5	294.6	294.8	295.8	295.7	295.6	296.2	296.2	297.2	297.2	297.2	296.2	296.7
20	***	***	1.933	294.9	294.4	294.8	295.6	295.4	295.5	296.2	296.2	297.2	297.2	297.2	296.2	296.2
21	***	***	1.932	295.1	294.3	294.9	295.7	295.6	295.5	296.2	296.2	297.2	297.2	297.2	294.7	296.2
26	***	***	1.927	294.8	293.8	293.9	294.6	294.8	294.8	295.2	295.2	296.2	296.2	296.2	294.2	295.2
31	***	***	1.924	294.5	293.3	293.1	293.7	293.8	294.3	295.2	295.2	295.2	295.2	296.2	294.2	295.2
36	***	***	1.920	293.9	293.0	293.1	293.8	294.1	294.1	294.2	294.7	295.2	295.2	295.2	294.2	294.2
41	***	***	1.918	293.5	292.3	291.5	293.5	294.2	294.0	294.2	294.2	295.2	295.2	294.2	291.7	294.2
46	***	***	1.916	293.1	292.2	292.0	293.1	293.5	293.5	294.2	294.2	294.2	294.2	294.2	291.2	293.2
51	***	***	1.914	292.4	291.3	291.7	292.6	293.2	293.1	293.2	294.2	294.7	294.2	294.2	290.2	293.2
56	***	***	1.912	291.9	290.9	290.4	291.2	292.8	292.9	293.2	293.2	294.2	293.2	293.2	289.2	293.2
61	***	***	1.910	292.4	290.9	290.6	291.1	291.9	291.9	293.2	292.2	292.7	293.2	293.2	288.2	292.2
66	***	***	1.909	292.3	291.5	291.3	291.9	291.9	292.2	292.2	292.2	292.2	292.2	292.2	289.2	291.2
71	***	***	1.907	292.0	291.0	291.0	291.7	291.8	292.1	291.7	291.2	292.2	291.2	291.7	290.2	291.2
81	***	***	1.905	292.0	290.8	290.7	291.7	291.5	291.5	291.2	291.2	292.2	292.2	292.2	290.7	291.2
91	***	***	1.902	291.4	290.4	290.2	291.3	291.3	291.4	291.2	291.2	291.7	292.2	292.2	291.2	291.2
101	***	***	1.900	291.1	290.0	289.9	290.9	291.0	291.1	291.2	291.2	292.2	292.2	292.2	289.2	291.2
111	***	***	1.898	290.9	290.1	290.1	291.0	291.0	290.7	291.2	291.2	292.2	292.2	292.2	290.2	290.2
121	***	***	1.896	290.7	289.9	289.8	290.9	290.9	290.7	290.2	290.2	292.2	291.2	291.2	289.2	290.2
131	***	***	1.894	290.6	289.5	289.5	290.5	290.5	290.6	290.2	290.2	291.2	290.2	290.2	288.2	290.2
141	***	***	1.893	290.4	289.3	289.5	290.4	290.1	290.2	290.2	289.2	290.2	290.2	290.2	289.2	289.2
151	***	***	1.891	290.1	289.0	289.0	289.7	289.7	289.6	290.2	289.2	290.2	290.2	290.2	289.2	289.2
161	***	***	1.890	289.6	288.8	288.8	289.6	289.5	289.5	289.2	289.2	290.2	290.2	290.2	288.2	289.2
171	***	***	1.888	289.4	288.4	288.3	289.3	289.3	289.3	289.2	289.2	290.2	290.2	290.2	287.2	269.2
181	***	***	1.887	289.3	288.3	288.4	289.3	289.3	289.0	289.2	288.2	290.2	289.2	289.2	288.2	268.2
191	***	***	1.885	289.1	288.1	288.1	289.0	288.8	289.8	288.2	268.2	289.2	289.2	289.2	288.2	268.2
201	***	***	1.884	288.8	288.1	287.9	288.8	288.6	288.6	288.2	268.2	289.2	289.2	289.2	286.2	269.2

COORDINATES

I	R (M)	THETA (DEG)	Z (M)
1	0.000	00	-0.586
2	0.000	00	-0.293
3	0.000	00	0.000
4	0.000	00	0.293
5	0.000	00	0.586
6	0.000	00	0.878
7	0.000	00	2.049
8	0.000	00	2.342
9	0.000	00	2.635
10	0.000	00	2.928
11	0.000	00	3.220
12	0.000	00	3.513
13	0.000	00	3.606

Table 11A — Scaling Run 239: Uncluttered 324–m^3 Chamber, Three 3.279-cm Nozzles

Time t (s)	Press Cyl P (atm)	T_c (K)	Chamber P (atm)	Chamber Absolute Temperatures (K) at Locations I												
				1	2	3	4	5	6	7	8	9	10	11	12	13
-5	***	***	.996	274.2	273.2	273.2	274.3	274.2	274.1	274.2	274.2	275.2	275.2	275.2	274.2	273.2
-4	***	***	.996	274.2	273.2	273.2	274.3	274.2	274.2	274.2	274.2	275.2	275.2	275.2	274.2	273.2
-3	***	***	.996	274.2	273.3	273.2	274.3	274.2	274.2	274.2	274.2	275.2	275.2	275.2	274.2	273.2
-2	***	***	.996	274.2	273.2	273.2	274.3	274.2	274.1	274.2	274.2	275.2	275.2	275.2	274.2	273.2
-1	***	***	.996	274.2	273.2	273.2	274.3	274.2	274.2	274.2	274.2	275.2	275.2	275.2	274.2	273.2
087.663	265.6		.996	276.5	273.9	271.4	274.7	276.4	277.3	274.2	274.7	275.2	275.2	275.2	280.7	273.7
170.810	248.4		1.057	283.8	278.1	267.2	278.7	281.5	282.1	277.2	279.2	279.2	278.2	278.2	271.2	275.2
272.446	247.6		1.182	288.5	282.9	271.3	283.4	286.3	286.9	282.2	284.2	284.7	284.2	283.2	272.7	279.7
366.163	246.7		1.297	291.8	287.2	273.3	285.2	288.6	288.1	286.2	287.2	288.2	287.2	286.2	273.2	283.2
460.928	244.2		1.399	293.1	285.8	273.9	287.5	290.2	289.9	289.2	289.7	290.7	290.2	289.7	273.7	286.2
556.075	238.3		1.492	293.8	287.5	272.8	288.9	290.9	290.7	290.2	290.2	292.2	292.2	291.2	273.2	289.2
651.895	235.2		1.577	294.6	289.2	272.6	290.7	291.8	291.5	291.2	291.7	293.2	292.2	291.2	274.2	287.7
747.939	232.3		1.654	294.9	290.5	272.9	291.0	293.7	293.5	290.2	290.2	292.2	293.2	289.2	274.2	289.2
844.937	229.1		1.726	294.8	290.4	272.3	292.7	293.5	291.6	291.2	292.2	293.2	293.7	291.7	273.2	289.2
941.374	226.4		1.792	294.2	290.3	272.1	291.3	292.4	292.0	291.2	292.2	293.2	293.2	292.2	274.2	292.2
1039.395	223.8		1.834	294.4	290.4	272.2	291.3	293.2	293.1	291.2	292.2	293.2	293.2	291.2	273.2	291.2
1136.762	223.0		1.891	294.5	290.5	272.5	291.5	291.8	291.5	292.2	292.2	293.2	293.2	291.2	273.2	290.2
1235.667	182.9		1.938	292.8	287.4	272.8	291.2	291.3	290.4	292.2	292.2	293.2	293.2	291.2	273.2	290.2
1335.976	159.5		1.947	289.8	286.5	280.8	290.4	290.5	290.6	291.2	290.7	291.7	291.7	290.2	279.2	285.7
1436.116	164.1		1.947	290.4	288.2	285.8	290.2	290.1	289.9	290.2	290.2	291.2	291.2	290.2	286.2	288.2
15	***	***	1.946	289.8	288.5	287.3	289.9	289.6	289.7	289.2	289.2	290.2	290.2	290.7	286.7	289.2
16	***	***	1.944	289.5	288.2	287.4	289.8	289.8	289.7	290.2	289.2	290.2	290.2	290.2	287.2	289.2
17	***	***	1.943	289.4	288.1	287.6	289.6	289.5	289.5	290.2	289.2	290.2	290.2	290.2	288.2	289.7
18	***	***	1.941	288.8	287.7	287.7	289.4	289.3	289.3	289.2	289.2	290.2	290.2	290.2	287.2	290.2
19	***	***	1.940	288.2	287.0	287.2	288.5	288.4	288.5	289.2	289.2	290.2	290.2	290.2	287.2	290.2
20	***	***	1.939	288.4	286.8	287.0	288.5	288.2	288.1	289.2	289.2	290.2	290.7	291.2	286.2	290.2
21	***	***	1.938	288.9	287.4	287.2	288.3	288.0	288.0	289.2	289.2	290.2	290.2	290.2	288.2	290.2
22	***	***	1.937	288.8	287.3	287.5	288.6	288.4	288.4	288.2	288.7	289.7	289.7	289.7	289.2	289.2
27	***	***	1.933	288.1	286.9	287.1	288.1	288.0	288.0	288.2	288.2	289.2	289.2	289.2	288.2	288.2
32	***	***	1.930	287.5	286.3	285.9	287.5	287.9	287.9	288.2	287.2	289.2	289.2	289.2	286.2	288.2
37	***	***	1.927	287.3	286.0	285.4	286.5	286.4	286.4	287.2	287.2	288.2	288.7	289.2	287.2	287.7
42	***	***	1.924	286.4	285.0	285.3	286.8	286.4	286.6	287.2	287.2	287.7	288.2	288.2	287.2	287.2
47	***	***	1.922	286.7	285.5	285.7	286.7	286.6	286.5	287.2	286.2	287.2	288.2	288.2	286.2	287.2
52	***	***	1.920	286.5	285.3	285.0	286.3	286.2	286.2	286.2	286.2	287.2	287.2	287.2	286.2	287.2
57	***	***	1.919	286.2	285.1	285.0	285.9	285.9	285.5	285.7	285.2	286.2	287.2	287.2	284.7	286.2
62	***	***	1.917	286.2	284.9	284.7	285.8	285.5	285.4	285.7	285.2	286.2	286.2	286.2	285.2	286.2
67	***	***	1.915	285.9	284.8	284.7	285.6	285.5	285.4	285.2	284.2	286.2	286.2	286.2	283.2	285.2
72	***	***	1.914	285.5	284.5	284.5	285.8	285.8	285.4	285.2	285.2	286.2	285.2	285.2	282.2	284.2
82	***	***	1.911	284.8	283.6	283.5	284.5	284.7	285.0	284.2	284.2	285.2	285.2	285.2	284.2	284.2
92	***	***	1.909	284.8	283.8	283.8	284.8	284.7	284.6	284.2	284.2	285.2	285.2	285.2	284.2	284.2
102	***	***	1.907	284.8	283.7	283.8	284.8	284.7	284.7	284.2	284.2	285.2	285.2	285.2	284.2	284.2
112	***	***	1.905	284.5	283.5	283.5	284.4	284.2	284.4	284.2	284.2	284.7	285.2	285.2	283.2	284.2
122	***	***	1.903	283.8	282.6	282.5	283.7	283.6	283.8	284.2	283.2	284.2	284.2	284.2	283.2	284.2
132	***	***	1.901	283.8	282.7	282.5	283.5	283.4	283.5	283.2	283.2	284.2	284.2	284.2	283.2	283.2
142	***	***	1.900	283.7	282.6	282.7	283.8	283.4	283.7	283.2	283.2	284.2	284.2	284.2	282.2	283.2
152	***	***	1.898	283.6	282.7	282.3	283.4	283.4	283.3	283.2	283.2	284.2	283.2	284.2	282.2	283.2
162	***	***	1.897	283.1	281.9	282.2	283.2	283.0	282.8	283.2	282.2	283.7	283.2	283.2	282.2	282.2
172	***	***	1.895	282.9	281.8	281.8	282.8	282.7	282.7	282.2	282.2	283.2	283.2	283.2	281.2	282.2
182	***	***	1.894	282.8	281.8	281.7	282.7	282.5	282.4	282.2	282.2	283.2	283.2	283.2	281.2	282.2
192	***	***	1.893	282.9	281.9	281.9	282.8	282.2	282.3	282.2	282.2	283.2	283.2	283.2	281.2	282.2

COORDINATES

I	R (M)	THETA (DEG)	Z (M)
1	0.000	00	-0.586
2	0.000	00	-0.293
3	0.000	00	0.000
4	0.000	00	0.293
5	0.000	00	0.586
6	0.000	00	0.878
7	0.000	00	2.049
8	0.000	00	2.342
9	0.000	00	2.635
10	0.000	00	2.928
11	0.000	00	3.220
12	0.000	00	3.513
13	0.000	00	3.806

Table 12A — Scaling Run 240: Uncluttered 324–m^3 Chamber, Three 3.279-cm Nozzles

Time t (s)	Press Cyl P (atm)	T_c (K)	Chamber P (atm)	Chamber Absolute Temperatures (K) at Locations I 1	2	3	4	5	6	7	8	9	10	11	12	13
-5	***	***	.993	275.3	274.3	274.2	275.2	275.2	275.3	274.2	274.2	275.2	275.2	275.2	275.2	274.2
-4	***	***	.993	275.3	274.2	274.2	275.3	275.2	275.3	274.2	274.2	275.2	275.2	275.2	275.2	274.2
-3	***	***	.993	275.3	274.3	274.2	275.3	275.2	275.3	274.2	274.2	275.2	275.2	275.2	275.2	274.2
-2	***	***	.993	275.3	274.3	274.2	275.3	275.2	275.3	274.2	274.2	275.2	275.2	275.2	275.2	274.2
-1	***	***	.993	275.3	274.3	274.2	275.3	275.2	275.3	274.2	274.2	275.2	275.2	275.2	275.2	274.2
094.687	274.2		.993	275.7	274.7	275.7	275.5	275.5	276.0	274.2	274.7	275.7	275.7	275.7	281.7	274.2
178.986	254.8		1.045	282.9	278.3	270.2	278.4	281.7	282.4	277.2	279.2	280.2	279.2	278.2	273.2	275.2
275.235	250.3		1.170	288.3	284.7	271.2	283.3	288.1	288.8	283.2	284.2	285.2	284.2	284.2	273.2	277.7
369.347	249.9		1.285	292.4	287.3	274.3	287.0	290.3	289.8	287.2	287.2	289.2	289.2	288.2	273.2	281.2
463.939	246.9		1.387	294.2	287.3	274.7	289.9	292.2	292.0	289.2	289.7	291.2	290.7	288.7	274.2	283.7
559.061	241.9		1.479	295.3	290.3	275.0	291.5	293.1	293.1	291.2	291.2	293.2	292.2	290.2	276.2	285.2
654.796	238.6		1.564	295.9	290.6	274.8	291.6	293.8	293.8	291.7	292.2	293.2	293.2	291.7	275.2	284.7
750.735	235.2		1.641	295.7	290.2	274.3	292.9	294.0	293.2	291.2	293.2	294.2	293.2	291.2	274.2	289.2
847.248	233.1		1.713	295.9	289.9	274.1	292.9	294.1	294.2	292.2	292.7	294.2	294.2	291.2	275.2	290.2
944.116	230.8		1.778	296.0	289.3	274.0	293.8	294.5	293.1	292.2	292.2	293.2	293.2	291.2	274.2	290.2
1042.048	228.9		1.819	296.3	291.9	274.7	293.4	294.2	293.8	292.2	292.2	293.2	293.2	292.2	274.2	292.2
1139.320	226.5		1.875	295.2	291.5	273.9	293.2	293.8	294.4	292.2	292.2	294.2	294.2	291.2	275.2	289.7
1239.054	199.9		1.927	294.7	290.0	274.5	293.9	294.3	293.4	291.2	292.2	293.2	293.2	291.2	274.2	287.2
1338.616	160.5		1.950	293.7	290.6	279.9	293.3	293.3	293.5	292.2	291.7	292.7	292.7	291.2	281.2	288.2
1438.864	164.6		1.952	293.1	291.0	288.6	293.1	292.4	291.7	290.2	290.2	292.2	291.2	291.2	288.2	289.2
15	***	***	1.951	292.2	290.8	289.6	292.4	291.7	291.6	290.7	290.2	291.2	291.2	291.2	289.2	289.7
16	***	***	1.949	291.7	290.4	289.6	291.7	291.5	291.3	290.2	290.2	291.2	291.2	292.2	289.2	290.2
17	***	***	1.947	291.5	290.0	289.3	291.3	290.9	290.9	290.2	290.2	291.2	291.2	291.2	289.7	290.2
18	***	***	1.946	291.2	289.7	289.5	290.7	290.7	290.8	290.2	290.2	291.2	291.2	291.2	289.2	290.2
19	***	***	1.945	291.0	289.5	289.4	290.4	290.0	290.6	290.2	290.2	291.2	291.2	291.2	288.2	290.2
20	***	***	1.944	290.7	289.4	289.4	290.0	289.9	290.5	290.2	290.2	291.2	291.2	291.2	289.2	290.2
21	***	***	1.943	290.5	289.2	289.3	290.0	289.9	290.2	289.2	289.2	291.2	291.2	291.2	289.2	290.2
22	***	***	1.942	290.2	289.0	288.9	289.5	289.6	289.7	289.2	289.2	290.2	290.7	291.2	289.2	290.2
27	***	***	1.938	288.8	287.7	287.8	289.3	288.8	288.9	289.2	289.2	290.2	290.2	290.2	289.2	289.2
32	***	***	1.934	288.8	288.1	288.1	288.8	289.1	289.0	289.2	289.2	290.2	290.2	290.2	288.2	288.2
37	***	***	1.931	288.4	287.3	287.4	288.7	288.6	288.9	288.2	288.2	289.2	289.2	289.2	286.7	288.2
42	***	***	1.929	288.3	286.5	287.2	288.1	288.5	288.5	288.2	288.2	289.2	289.2	289.2	287.7	288.2
47	***	***	1.927	286.9	285.7	285.5	286.8	286.9	287.0	287.2	287.2	288.2	288.2	289.2	287.2	287.2
52	***	***	1.925	287.3	286.2	285.1	286.4	287.0	286.8	287.2	287.2	288.2	288.2	288.2	286.2	287.2
57	***	***	1.923	287.7	285.8	284.9	286.6	287.0	286.3	286.2	286.2	287.2	287.2	287.2	284.7	286.7
62	***	***	1.921	287.2	284.7	285.0	285.9	285.8	285.5	287.2	287.2	287.2	287.7	287.2	283.2	286.2
67	***	***	1.920	286.5	284.7	284.8	285.9	285.8	286.0	286.2	286.2	286.2	286.2	286.2	283.2	285.2
72	***	***	1.918	286.4	285.1	285.0	286.1	286.3	286.2	285.2	285.2	286.2	286.2	286.2	284.2	285.2
82	***	***	1.916	286.5	285.5	285.4	286.3	286.3	286.3	285.2	285.2	286.2	286.2	286.2	285.2	285.2
92	***	***	1.913	286.5	285.5	285.4	286.4	286.2	285.9	285.2	285.2	286.2	286.2	286.2	285.2	285.2
102	***	***	1.911	286.1	284.9	284.8	285.9	286.0	286.0	285.2	285.2	286.2	286.2	286.2	285.2	285.2
112	***	***	1.909	285.9	284.8	284.8	285.9	285.8	285.8	285.2	284.2	285.2	285.2	286.2	284.2	285.2
122	***	***	1.907	285.3	284.3	284.3	285.4	285.3	285.2	285.2	284.2	285.2	285.2	285.2	284.2	284.2
132	***	***	1.906	285.2	284.1	284.2	285.3	285.4	285.2	284.2	284.2	285.2	285.2	285.2	284.2	284.2
142	***	***	1.904	284.9	283.9	283.9	285.0	284.5	284.8	284.2	284.2	285.2	285.2	284.2	283.2	284.2
152	***	***	1.902	284.8	283.8	283.7	284.7	284.5	284.5	284.2	283.2	284.2	284.2	284.2	283.2	283.2
162	***	***	1.901	284.5	283.5	283.5	284.3	284.3	284.4	283.2	283.2	284.2	284.2	284.2	282.7	283.2
172	***	***	1.899	284.2	283.1	283.0	284.3	284.2	284.2	283.2	283.2	284.2	284.2	284.2	282.2	283.2
182	***	***	1.898	284.0	283.0	282.9	284.0	283.9	283.7	283.2	283.2	284.2	284.2	284.2	282.2	283.2
192	***	***	1.897	283.7	282.7	282.7	283.8	283.8	283.8	283.2	283.2	283.2	284.2	284.2	283.2	282.2

COORDINATES

I	R (M)	THETA (DEG)	Z (M)
1	0.000	00	-0.586
2	0.000	00	-0.293
3	0.000	00	0.000
4	0.000	00	0.293
5	0.000	00	0.586
6	0.000	00	0.878
7	0.000	00	2.049
8	0.000	00	2.342
9	0.000	00	2.635
10	0.000	00	2.928
11	0.000	00	3.220
12	0.000	00	3.513
13	0.000	00	3.806

Table 13A — Scaling Run 241: Cluttered 324–m^3 Chamber, South 3.279-cm Nozzle

Time t (s)	Press Cyl P (atm)	T_c (K)	Chamber P (atm)	Chamber Absolute Temperatures (K) at Locations I 1	2	3	4	5	6	7	8	9	10	11	12	13
-5	***	***	1.009	289.6	289.1	289.0	289.6	289.6	289.5	290.2	290.2	290.2	290.2	290.2	290.2	290.2
-4	***	***	1.009	289.6	289.2	289.0	289.6	289.6	289.5	290.2	290.2	290.2	290.2	290.2	290.2	290.2
-3	***	***	1.009	289.6	289.1	289.0	289.6	289.6	289.5	290.2	290.2	290.2	290.2	290.2	290.2	290.2
-2	***	***	1.009	289.6	289.1	289.0	289.6	289.6	289.5	290.2	290.2	290.2	290.2	290.2	290.2	290.2
-1	***	***	1.009	289.6	289.1	289.0	289.6	289.6	289.6	290.2	290.2	290.2	290.2	290.2	290.2	290.2
094.269	290.6		1.010	289.7	289.2	289.1	289.6	289.6	289.6	290.2	290.2	290.2	290.2	290.2	290.2	290.2
185.490	301.8		1.036	293.6	292.4	291.0	292.1	292.5	293.8	290.2	291.2	291.2	291.2	291.2	290.2	290.2
282.405	275.6		1.091	297.8	296.9	296.5	296.9	297.5	298.1	293.2	293.2	294.7	294.2	294.7	293.2	293.2
379.408	268.4		1.143	300.5	299.7	299.4	299.9	300.4	300.5	295.2	296.2	298.2	297.2	297.2	296.2	296.2
476.265	266.3		1.192	302.6	301.8	301.7	302.3	302.4	302.6	299.2	298.7	299.7	299.7	300.2	298.7	299.2
572.701	262.6		1.237	302.6	302.5	303.1	303.8	303.4	303.5	302.2	302.2	301.2	302.2	302.2	301.2	302.2
668.303	263.0		1.281	303.6	303.7	304.2	304.6	305.4	305.7	303.7	304.2	303.7	304.7	305.7	303.7	304.2
763.347	262.2		1.323	304.9	305.0	304.9	305.9	306.1	305.9	305.2	306.2	306.2	306.2	306.2	305.2	305.2
864.582	261.2		1.363	305.8	305.2	304.5	306.4	306.3	306.1	307.2	306.7	307.7	307.7	307.7	306.7	306.2
970.122	260.4		1.402	307.4	306.7	307.0	307.3	307.3	307.4	309.2	308.2	308.2	308.2	308.2	307.2	306.2
1068.714	258.9		1.427	306.9	306.3	307.5	307.0	306.6	306.6	310.2	309.2	308.2	308.2	308.2	307.2	307.2
1166.724	258.9		1.463	307.3	307.3	307.3	308.1	307.9	307.8	310.7	310.2	308.7	308.7	308.2	307.2	307.2
1264.694	257.7		1.498	308.7	308.3	308.9	309.1	308.6	308.2	311.2	311.2	309.2	309.2	309.2	307.2	307.2
1362.806	256.7		1.531	307.0	307.0	307.8	307.5	306.6	306.1	312.2	311.2	309.2	309.2	309.2	308.2	307.7
1460.932	256.9		1.563	307.9	306.8	306.1	307.4	307.8	307.9	311.2	312.2	309.2	310.2	310.2	309.2	309.2
1559.099	255.7		1.595	306.6	307.9	308.0	308.8	309.7	310.4	311.7	310.2	310.7	310.7	311.7	309.7	310.7
1657.408	253.6		1.625	307.3	306.8	306.8	308.1	309.4	310.3	312.2	312.2	311.2	311.2	312.2	310.2	310.2
1755.779	254.1		1.655	308.7	308.3	308.3	309.0	309.2	309.3	313.2	312.7	311.2	310.2	311.2	309.7	308.7
1854.184	252.3		1.684	308.1	307.9	308.9	308.8	308.7	309.0	314.2	313.2	311.2	312.2	311.2	308.2	308.2
1953.177	252.0		1.702	307.5	307.3	306.6	307.3	307.8	308.4	314.2	314.2	310.2	311.2	311.2	309.2	308.2
2051.650	251.5		1.729	307.0	307.0	306.9	307.5	307.8	307.1	314.2	313.7	311.2	312.7	312.2	310.2	309.7
2150.218	251.9		1.756	307.6	306.6	306.6	306.6	306.8	308.3	314.2	312.2	312.2	312.2	311.2	309.2	309.2
2248.765	250.5		1.781	307.8	307.3	306.7	306.8	306.6	307.0	313.2	313.2	310.2	310.2	310.2	308.2	309.2
2347.279	249.8		1.806	308.5	307.9	307.5	308.4	308.6	309.1	314.2	311.2	310.2	311.2	311.2	309.2	309.2
2445.871	249.1		1.830	308.4	308.0	308.0	309.1	308.8	309.3	314.2	312.7	310.2	309.7	309.2	308.7	308.7
2544.469	248.1		1.854	309.9	309.4	308.8	310.2	310.0	310.0	314.2	313.2	309.2	309.2	308.2	307.2	307.2
2643.728	247.8		1.869	309.0	308.4	308.4	308.9	308.9	307.9	314.2	313.2	310.2	309.2	309.2	307.2	307.2
2742.384	246.9		1.892	308.0	307.0	306.9	307.6	307.2	307.1	314.2	312.7	309.2	309.2	309.2	307.2	307.7
2841.265	246.0		1.913	307.2	306.6	306.3	307.0	306.8	306.6	312.2	312.2	309.2	309.2	309.2	308.2	307.2
2940.027	244.8		1.934	305.8	306.4	305.3	307.1	306.7	307.0	312.2	312.2	308.7	308.7	309.2	308.7	308.7
3039.092	239.5		1.954	305.2	305.1	305.7	305.9	305.4	304.8	311.2	311.2	310.2	310.2	310.2	309.2	310.2
3139.003	227.5		1.967	304.9	304.9	305.3	306.0	306.3	305.5	311.2	311.2	309.7	309.2	309.2	307.7	307.7
32	***	***	1.974	304.9	304.2	303.8	305.4	305.9	306.7	310.2	310.2	308.2	308.2	308.2	307.2	307.2
33	***	***	1.977	304.8	304.3	304.6	305.9	306.1	306.4	310.2	310.2	308.2	308.2	307.2	307.2	306.2
34	***	***	1.979	304.2	303.5	304.0	305.0	305.6	306.0	310.2	309.2	307.7	307.2	307.2	306.2	306.2
35	***	***	1.980	303.6	303.5	303.5	305.2	305.2	304.9	309.2	309.2	307.2	307.2	306.2	305.2	305.2
36	***	***	1.981	303.8	303.5	303.9	304.7	304.6	304.5	309.2	309.2	306.7	306.2	306.2	304.2	305.2
37	***	***	1.981	303.8	303.3	303.9	304.5	304.8	304.9	308.2	308.2	306.2	306.2	307.2	304.2	305.2
38	***	***	1.980	304.1	303.6	303.8	304.5	304.4	304.2	308.2	307.2	305.2	306.2	306.7	305.2	305.2
39	***	***	1.980	304.0	303.4	302.8	303.3	303.0	303.4	308.2	306.2	305.2	306.2	305.2	304.2	304.2
44	***	***	1.976	302.7	302.2	301.8	302.4	302.6	302.0	306.2	305.2	304.2	304.2	304.2	303.2	304.2
49	***	***	1.974	301.6	301.5	301.5	302.7	302.2	301.8	304.2	304.2	303.2	303.2	304.2	302.7	304.2
54	***	***	1.971	301.5	301.4	301.5	302.4	302.3	301.8	303.2	303.2	303.2	303.2	303.2	300.2	303.2
59	***	***	1.970	301.0	300.8	300.6	301.8	302.1	302.0	303.2	302.2	301.2	303.2	303.2	301.2	303.2
64	***	***	1.968	301.1	301.0	300.9	301.4	301.0	300.8	303.2	302.2	301.7	302.2	302.2	299.2	302.2
69	***	***	1.966	300.3	299.7	299.5	300.2	300.4	299.9	302.2	302.2	301.7	301.2	301.2	298.7	301.2
74	***	***	1.965	300.2	299.4	299.2	299.5	299.3	299.2	301.2	301.2	302.2	301.2	301.2	300.2	301.2
79	***	***	1.964	299.9	299.4	299.5	300.0	300.0	299.7	301.2	300.2	301.2	301.2	301.2	300.2	301.2
84	***	***	1.962	299.5	299.0	299.2	300.0	300.0	299.9	301.2	300.2	301.2	301.2	301.2	299.2	301.2
89	***	***	1.961	299.0	298.7	299.0	299.8	300.2	299.7	300.2	300.2	301.2	301.2	301.2	299.2	300.2

COORDINATES

I	R (M)	THETA (DEG)	Z (M)
1	0.000	00	-0.586
2	0.000	00	-0.293
3	0.000	00	0.000
4	0.000	00	0.293
5	0.000	00	0.586
6	0.000	00	0.878
7	0.000	00	2.049
8	0.000	00	2.342
9	0.000	00	2.635
10	0.000	00	2.928
11	0.000	00	3.220
12	0.000	00	3.513
13	0.000	00	3.806

Table 14A — Scaling Run 242: Cluttered 324–m^3 Chamber, South 3.279-cm Nozzle

Time t (s)	Press Cyl P (atm)	T_s (K)	Chamber P (atm)	Chamber Absolute Temperatures (K) at Locations I 1	2	3	4	5	6	7	8	9	10	11	12	13
-5	***	***	1.006	292.4	291.8	291.8	292.4	292.3	292.3	292.2	292.2	293.2	293.2	293.2	293.2	292.2
-4	***	***	1.006	292.4	291.8	291.7	292.4	292.3	292.3	292.2	292.2	293.2	293.2	293.2	293.2	292.2
-3	***	***	1.006	292.4	291.8	291.8	292.4	292.3	292.3	292.2	292.2	293.2	293.2	293.2	293.2	292.2
-2	***	***	1.006	292.4	291.8	291.8	292.4	292.2	292.3	292.2	292.2	293.2	293.2	293.2	293.2	292.2
-1	***	***	1.006	292.4	291.8	291.8	292.4	292.3	292.3	292.2	292.2	293.2	293.2	293.2	293.2	292.2
085.925	330.8		1.008	293.2	292.4	292.1	292.8	292.9	293.2	292.7	292.7	293.2	293.2	293.2	293.2	292.7
185.442	287.1		1.047	298.2	296.9	294.6	295.7	297.1	298.6	294.2	294.2	294.2	294.2	295.2	294.2	294.2
282.793	277.9		1.101	301.4	300.6	300.3	300.9	301.4	301.8	296.7	297.2	298.2	297.2	298.2	297.2	297.2
380.306	271.6		1.152	304.5	303.5	303.1	303.8	304.1	304.4	299.2	300.2	301.2	300.2	301.2	300.2	300.2
477.905	267.3		1.199	305.9	304.9	304.7	305.4	305.5	306.4	301.2	302.7	304.2	303.7	303.7	301.7	302.7
575.476	267.5		1.245	307.4	307.0	306.8	307.2	307.6	307.9	305.2	305.2	305.2	305.2	305.2	304.2	305.2
673.830	266.0		1.274	308.1	307.8	307.0	307.9	308.1	309.2	307.2	307.2	307.2	307.2	307.2	305.2	306.2
771.442	265.9		1.315	308.4	307.7	308.0	308.0	308.0	308.3	309.2	309.2	309.7	308.7	309.7	308.2	308.2
869.143	265.3		1.355	308.8	308.9	308.6	310.0	310.6	311.3	310.2	310.2	310.2	310.2	311.2	309.2	310.2
967.000	263.4		1.393	310.2	310.2	310.7	311.9	311.6	310.7	311.2	311.2	310.2	310.7	310.7	309.2	310.2
1064.871	262.6		1.430	311.1	310.5	310.0	310.9	310.5	311.1	311.2	311.2	311.2	311.2	311.2	309.2	310.2
1162.861	261.7		1.466	311.8	310.8	310.9	311.3	311.3	311.7	313.2	311.7	311.2	312.2	312.2	310.2	311.2
1260.864	261.2		1.500	311.2	310.8	310.6	310.4	310.2	310.8	315.2	312.2	312.2	312.2	313.2	310.2	311.2
1358.932	260.5		1.533	311.0	310.4	309.9	311.1	311.2	311.4	315.2	314.2	312.7	313.2	313.2	311.2	312.2
1457.156	259.5		1.564	311.7	310.4	310.9	310.9	310.9	313.0	316.2	315.2	313.2	313.2	313.2	311.2	312.2
1556.034	259.1		1.585	311.9	310.8	311.1	311.6	311.5	310.9	315.2	314.2	313.2	313.2	313.2	311.2	312.2
1654.220	258.5		1.615	312.4	311.8	311.9	312.2	312.3	312.4	315.2	314.7	312.7	312.2	312.7	310.2	312.2
1752.578	257.1		1.644	312.3	311.9	311.9	312.6	312.5	311.9	315.2	314.2	313.2	313.2	315.2	311.2	313.2
1851.031	256.8		1.673	312.9	312.3	311.8	312.8	312.3	312.7	315.2	314.2	313.2	313.2	314.2	311.2	313.2
1949.558	256.0		1.701	312.4	312.1	312.3	312.3	312.0	312.2	315.2	315.2	313.2	313.2	314.2	312.2	313.2
2048.051	255.5		1.727	311.9	311.6	311.2	311.3	311.0	311.3	315.7	315.2	313.2	312.7	314.2	312.2	312.2
2146.585	254.5		1.753	311.1	310.6	310.9	310.9	310.5	310.4	316.2	315.2	313.2	313.2	314.2	312.2	313.2
2245.578	254.4		1.769	310.4	310.2	310.8	311.6	312.2	313.2	315.2	315.2	314.2	313.2	314.2	313.2	312.2
2344.088	253.6		1.794	309.8	309.9	310.4	311.9	313.1	313.8	315.2	314.2	312.7	312.2	312.2	310.7	311.2
2442.388	253.0		1.818	310.3	311.0	310.9	312.2	312.4	312.8	315.2	314.2	312.2	312.2	312.2	309.2	311.2
2540.296	252.5		1.841	312.0	311.7	311.6	312.3	312.4	312.7	315.2	313.7	312.7	313.2	312.7	310.2	311.7
2638.898	251.8		1.864	311.7	311.3	311.5	311.7	312.6	313.1	316.2	315.2	312.2	313.2	313.2	309.2	310.2
2741.524	250.7		1.886	312.7	312.6	312.7	312.6	312.8	312.5	316.2	315.7	311.7	312.7	313.2	309.7	310.7
2840.558	250.4		1.907	310.9	311.2	311.5	311.1	310.6	310.4	316.2	316.2	312.2	312.2	313.2	310.2	310.2
2939.823	249.6		1.921	309.8	309.3	309.1	309.8	309.6	309.8	315.2	316.2	312.2	312.2	312.2	309.2	310.2
3038.942	242.9		1.940	309.6	309.4	309.8	309.9	309.9	310.1	315.2	315.7	312.2	312.2	312.2	310.2	310.7
3138.925	230.0		1.954	309.3	308.7	308.8	309.8	310.0	310.0	315.2	314.2	311.2	311.2	311.2	310.2	311.2
32	***	***	1.961	309.3	309.5	310.2	310.4	309.8	309.4	313.7	314.2	310.7	311.2	311.2	309.7	311.2
33	***	***	1.965	308.3	309.0	309.8	310.1	309.7	309.9	314.2	313.2	310.2	311.2	311.2	310.2	311.2
34	***	***	1.967	308.1	308.1	308.9	309.7	309.5	309.1	314.2	313.2	310.2	311.2	311.7	309.2	310.7
35	***	***	1.968	308.3	307.9	308.1	308.9	308.5	308.4	313.2	313.2	309.2	310.2	311.2	309.2	310.2
36	***	***	1.968	308.1	307.6	307.6	308.1	308.1	308.4	313.2	313.2	309.2	310.2	310.2	308.2	309.2
37	***	***	1.968	308.0	307.5	307.4	308.1	308.1	308.2	312.2	311.7	309.2	309.2	309.2	306.7	308.2
38	***	***	1.968	308.0	307.5	307.5	308.1	307.8	308.0	312.2	311.2	308.2	309.2	309.2	307.2	307.2
39	***	***	1.967	308.2	307.5	306.9	307.7	307.3	307.1	310.7	310.7	308.2	308.2	309.2	306.7	307.7
44	***	***	1.964	306.6	306.1	305.9	306.9	305.7	305.8	309.2	309.2	307.2	306.7	306.7	305.2	306.2
49	***	***	1.961	305.2	305.0	304.8	305.0	304.5	304.4	306.2	308.2	307.2	307.2	307.2	304.2	305.2
54	***	***	1.959	305.1	304.3	303.2	303.2	303.3	303.9	306.2	306.2	307.2	307.2	306.2	304.2	304.2
59	***	***	1.957	303.9	303.5	303.5	303.6	303.8	303.9	305.2	305.2	306.2	306.2	306.2	304.2	305.2
64	***	***	1.955	303.3	303.0	303.1	303.7	303.7	303.6	305.2	304.2	306.2	305.2	305.2	304.2	305.2
69	***	***	1.954	303.5	302.9	302.7	303.3	303.2	303.5	305.2	305.2	305.2	305.2	305.2	304.2	305.2
74	***	***	1.952	303.1	302.8	302.7	303.2	303.4	303.5	305.2	304.2	305.2	305.2	305.2	304.2	304.7
79	***	***	1.951	303.5	303.0	303.0	303.1	303.1	303.5	304.2	304.2	305.2	305.2	304.2	302.2	304.2
84	***	***	1.950	303.8	302.7	302.7	302.5	303.1	303.3	304.2	304.2	305.2	304.2	304.2	302.2	304.2
89	***	***	1.949	303.5	302.7	302.5	302.7	302.9	303.0	303.2	303.2	304.2	304.2	304.2	302.2	304.2

COORDINATES

I	R (M)	THETA (DEG)	Z (M)
1	0.000	00	-0.586
2	0.000	00	-0.293
3	0.000	00	0.000
4	0.000	00	0.293
5	0.000	00	0.586
6	0.000	00	0.678
7	0.000	00	2.049
8	0.000	00	2.342
9	0.000	00	2.635
10	0.000	00	2.928
11	0.000	00	3.220
12	0.000	00	3.513
13	0.000	00	3.806

Table 15A — Scaling Run 243: Cluttered 324–m³ Chamber, South 3.279-cm Nozzle

Time t (s)	Press Cyl P (atm)	T_s (K)	Chamber P (atm)	Chamber Absolute Temperatures (K) at Locations I 1	2	3	4	5	6	7	8	9	10	11	12	13
-5	***	***	1.000	289.0	288.4	288.5	289.1	288.9	289.0	290.2	290.2	291.2	291.2	291.2	290.2	290.2
-4	***	***	1.000	289.0	288.5	288.5	289.0	288.9	289.0	290.2	290.2	291.2	291.2	291.2	290.2	290.2
-3	***	***	1.000	289.0	288.5	288.5	289.0	288.9	288.9	290.2	290.2	291.2	291.2	291.2	290.2	290.2
-2	***	***	1.000	289.0	288.5	288.5	289.1	288.9	288.9	290.2	290.2	291.2	291.2	291.2	290.2	290.2
-1	***	***	1.000	289.0	288.5	288.5	289.1	288.9	288.9	290.2	290.2	291.2	291.2	291.2	290.2	290.2
099.020	289.2		1.000	289.1	288.5	288.6	289.0	288.9	289.1	290.2	290.2	291.2	291.2	291.2	290.7	290.2
191.272	290.9		1.028	293.0	291.7	290.5	291.7	292.4	293.3	291.2	291.2	291.2	291.2	292.2	291.2	291.2
288.255	275.7		1.082	297.2	296.4	296.3	296.7	297.3	297.4	294.2	294.2	294.7	294.7	295.7	294.2	294.7
385.667	266.6		1.134	300.1	299.2	298.9	299.7	300.3	300.7	297.2	297.2	298.2	298.2	299.2	297.2	297.2
483.207	262.6		1.182	302.4	301.0	301.0	302.0	302.2	302.2	298.7	299.7	300.2	301.2	301.2	299.7	300.2
580.796	261.4		1.228	303.3	302.5	301.7	302.7	303.2	303.9	302.2	302.2	303.2	302.2	303.2	301.2	302.2
678.354	260.8		1.271	304.5	304.0	303.9	304.5	305.0	305.4	303.2	304.7	304.2	304.7	305.2	302.7	303.7
776.020	259.2		1.313	306.6	305.5	305.8	305.8	305.9	306.8	306.2	306.2	306.2	306.2	307.2	305.2	305.2
873.687	259.4		1.353	305.3	305.5	306.2	306.3	306.1	306.2	307.7	306.7	307.7	307.7	308.2	305.7	306.7
971.503	259.2		1.391	306.5	305.5	305.7	306.3	306.0	307.1	308.2	307.2	309.2	309.2	309.2	307.2	308.2
1070.102	257.6		1.416	306.0	305.2	305.0	305.9	305.8	306.5	309.2	309.2	309.2	309.2	310.2	308.2	308.2
1167.929	257.1		1.452	307.1	306.1	305.7	306.3	307.0	307.4	309.7	310.2	310.7	310.7	310.7	308.7	309.2
1265.939	256.5		1.487	308.7	308.3	308.0	308.8	308.8	309.1	311.2	310.2	311.2	311.2	311.2	308.2	309.2
1363.990	255.8		1.521	308.8	307.5	307.7	308.1	307.4	306.9	311.7	309.7	310.2	310.2	310.7	308.7	309.2
1462.136	254.2		1.553	308.1	307.5	307.6	307.4	307.1	308.0	312.2	311.2	311.2	310.2	311.2	310.2	309.2
1560.381	253.8		1.584	307.6	307.0	306.2	308.0	308.6	308.5	312.7	311.7	311.2	310.2	310.2	308.2	308.7
1658.667	253.5		1.614	306.3	307.9	308.1	310.2	309.7	310.2	314.2	313.2	311.2	310.2	311.2	309.2	309.2
1757.585	252.4		1.634	306.8	307.1	307.8	309.2	309.2	309.3	314.2	313.2	310.2	310.2	310.2	309.2	309.2
1855.966	251.0		1.662	307.3	306.4	307.2	310.0	308.3	309.3	314.2	312.7	310.2	310.2	310.2	307.7	308.7
1954.422	250.5		1.690	307.9	307.3	307.4	308.6	307.6	307.0	313.2	313.2	310.2	310.2	310.2	308.2	309.2
2052.949	249.9		1.717	308.0	307.2	307.4	307.8	306.8	307.0	314.2	312.2	310.2	310.7	311.2	307.2	308.7
2151.558	248.9		1.743	308.3	307.3	306.8	308.0	308.2	308.3	314.2	312.2	310.2	310.2	310.2	308.2	309.2
2250.211	249.9		1.769	308.9	308.5	308.8	308.9	308.7	308.8	315.2	312.7	311.2	310.7	310.7	309.2	309.7
2348.905	248.1		1.794	307.5	306.9	308.3	308.2	308.0	307.9	315.2	312.2	311.2	311.2	310.2	309.2	309.2
2448.082	247.6		1.810	306.3	306.6	307.1	308.2	308.2	308.0	314.2	313.2	310.2	310.2	310.2	308.2	309.2
2546.833	246.7		1.833	306.0	305.9	307.1	308.6	308.3	308.3	313.7	312.7	310.2	310.2	310.2	308.7	308.7
2645.646	246.6		1.856	306.4	306.4	307.1	308.2	308.5	308.8	313.2	312.2	310.2	310.2	310.2	308.2	308.2
2744.524	245.5		1.879	307.1	307.2	308.1	308.0	308.0	308.5	312.7	313.2	309.7	310.2	309.7	306.7	308.2
2843.435	244.8		1.901	307.3	306.8	306.6	307.5	306.6	307.1	313.2	314.2	309.2	310.2	310.2	306.2	308.2
2942.405	242.5		1.922	307.2	306.9	307.4	307.7	307.6	308.2	312.2	312.7	309.7	310.2	310.2	306.7	307.7
3041.905	234.5		1.939	305.7	305.4	305.9	306.4	306.3	307.0	313.2	313.2	309.2	310.2	310.2	308.2	308.2
3142.048	221.3		1.946	305.8	305.5	306.5	306.6	306.2	306.5	313.2	314.2	309.2	310.2	309.2	308.2	309.2
32	***	***	1.952	305.8	305.5	305.2	305.9	305.7	305.7	312.7	312.7	308.7	308.7	308.7	307.7	308.2
33	***	***	1.955	305.8	305.2	305.3	305.8	305.5	305.3	312.2	311.2	308.2	308.2	308.2	307.2	308.2
34	***	***	1.957	305.2	304.6	304.8	305.4	305.1	305.2	311.2	310.2	307.7	308.2	308.2	306.2	308.2
35	***	***	1.957	304.7	304.4	304.5	305.2	304.9	305.1	311.2	310.2	307.2	308.2	308.2	305.2	307.2
36	***	***	1.957	304.8	304.4	304.5	305.0	304.7	304.9	310.7	310.2	306.7	307.2	307.2	304.7	305.7
37	***	***	1.957	304.7	304.0	304.4	304.6	304.4	304.6	310.2	310.2	306.2	306.2	306.2	305.2	305.2
38	***	***	1.956	304.9	304.0	304.1	304.5	304.4	304.5	309.2	310.2	306.2	306.2	306.2	305.2	305.7
39	***	***	1.956	304.7	303.9	303.9	304.5	304.3	304.3	309.2	310.2	306.2	306.2	306.2	304.2	305.2
44	***	***	1.953	302.9	302.7	303.1	303.6	303.5	303.3	308.2	308.2	305.2	306.2	305.2	304.2	305.2
49	***	***	1.950	302.7	301.8	302.6	302.6	302.9	302.8	306.2	306.2	305.2	305.2	305.2	303.2	304.2
54	***	***	1.948	301.7	301.2	301.0	301.2	302.0	301.9	305.2	305.2	303.2	303.2	303.2	301.2	303.2
59	***	***	1.946	300.9	300.2	300.6	300.9	301.0	301.7	304.2	303.2	303.2	302.2	302.2	301.2	302.2
64	***	***	1.944	300.2	299.8	300.0	300.2	300.0	299.8	303.2	303.2	303.2	302.7	302.2	301.2	302.2
69	***	***	1.942	300.4	299.5	299.5	300.2	300.0	299.9	303.2	303.2	303.2	303.2	302.2	302.2	302.2
74	***	***	1.941	301.0	300.3	300.4	300.8	300.4	300.3	302.2	302.2	303.2	303.2	302.2	301.2	302.2
79	***	***	1.940	300.2	299.9	300.1	300.3	300.4	300.6	302.2	302.2	302.2	302.2	302.2	300.2	302.2
84	***	***	1.938	300.3	299.5	299.2	299.9	300.0	300.0	301.2	301.2	301.2	302.2	302.2	300.2	301.2
89	***	***	1.937	299.6	298.8	299.0	299.7	299.7	299.9	301.2	301.2	301.2	302.2	302.2	301.2	301.2

COORDINATES

I	R (M)	THETA (DEG)	Z (M)
1	0.000	00	-0.586
2	0.000	00	-0.293
3	0.000	00	0.000
4	0.000	00	0.293
5	0.000	00	0.586
6	0.000	00	0.878
7	0.000	00	2.049
8	0.000	00	2.342
9	0.000	00	2.635
10	0.000	00	2.928
11	0.000	00	3.220
12	0.000	00	3.513
13	0.000	00	3.806

Table 16A — Scaling Run 244: Cluttered 324–m^3 Chamber, South 3.279-cm Nozzle

Time t (s)	Press Cyl P (atm)	T_i (K)	Chamber P (atm)	1	2	3	4	5	6	7	8	9	10	11	12	13
				Chamber Absolute Temperatures (K) at Locations l												
-5	***	***	.993	290.4	290.1	290.2	290.5	290.3	290.4	291.2	291.2	291.2	291.2	291.2	291.2	291.2
-4	***	***	.993	290.4	290.1	290.2	290.5	290.4	290.4	291.2	291.2	291.2	291.2	291.2	291.2	291.2
-3	***	***	.993	290.4	290.1	290.1	290.5	290.3	290.4	291.2	291.2	291.2	291.2	291.2	291.2	291.2
-2	***	***	.993	290.4	290.1	290.2	290.5	290.3	290.4	291.2	291.2	291.2	291.2	291.2	291.2	291.2
-1	***	***	.993	290.4	290.1	290.2	290.4	290.4	290.4	291.2	291.2	291.2	291.2	291.2	291.2	291.2
.097	224	291.0	.994	290.6	290.1	290.1	290.5	290.4	290.5	291.2	291.2	291.2	291.2	291.2	291.2	291.2
190	.918	304.6	1.023	294.4	293.3	292.1	293.0	293.7	294.2	292.2	292.2	292.2	292.2	292.2	292.2	292.2
287	.906	277.7	1.077	298.7	298.1	297.8	298.0	298.6	299.2	295.2	295.2	295.2	295.2	295.7	294.7	295.2
385	.537	269.6	1.129	301.4	300.9	300.9	301.2	301.7	302.0	298.2	298.2	299.2	298.2	299.2	297.2	298.2
483	.068	266.1	1.177	303.9	303.3	302.7	303.1	303.5	303.8	300.2	299.7	301.2	300.7	301.7	300.2	301.2
580	.687	266.1	1.222	304.8	304.5	304.1	304.7	304.8	305.2	303.2	302.2	303.2	303.2	304.2	302.2	303.2
678	.279	263.0	1.265	305.3	305.4	305.4	305.6	306.0	306.0	305.7	303.7	305.2	305.7	305.2	304.2	304.2
775	.925	262.5	1.307	307.7	307.2	306.8	307.3	307.1	308.1	307.2	306.2	307.2	307.2	307.2	305.2	305.2
873	.676	261.5	1.347	308.5	308.0	308.0	308.1	307.8	308.5	309.2	308.7	308.7	308.7	308.7	307.7	307.2
971	.442	261.0	1.385	308.4	307.7	308.0	308.5	308.5	309.3	311.2	309.2	310.2	309.2	309.2	307.2	308.2
1070	.075	260.5	1.409	309.4	308.7	308.8	309.5	310.0	309.7	311.2	309.2	310.2	310.2	310.2	307.2	308.2
1167	.963	259.2	1.445	308.8	309.0	309.5	309.3	308.8	307.5	312.7	311.2	310.2	310.2	310.7	308.7	308.7
1265	.939	258.5	1.480	309.5	309.2	308.8	309.4	309.3	308.5	313.2	312.2	311.2	311.2	312.2	310.2	310.2
1364	.037	257.8	1.513	309.7	310.4	310.3	310.4	310.2	309.4	313.7	311.2	311.7	311.2	311.2	309.7	310.2
1462	.211	257.6	1.545	310.6	310.5	310.6	310.4	310.2	310.6	313.2	311.2	312.2	312.2	312.2	311.2	311.2
1560	.391	256.0	1.576	309.9	309.4	310.0	310.6	310.4	310.8	314.2	313.2	311.7	312.2	311.2	309.7	310.2
1658	.707	256.5	1.606	310.4	309.5	309.5	310.0	309.4	309.3	314.2	313.2	311.2	311.2	311.2	309.2	310.2
1757	.071	254.9	1.634	309.4	309.0	309.0	309.5	308.8	308.6	314.7	314.2	312.2	311.7	311.7	310.2	310.7
1855	.531	254.2	1.663	309.3	309.1	309.0	309.3	309.7	311.0	316.2	314.2	312.2	312.2	312.2	310.2	311.2
1954	.469	253.0	1.681	308.7	308.8	309.7	310.0	310.6	311.2	316.2	315.2	312.2	313.2	312.2	310.2	310.2
2053	.010	252.6	1.708	310.1	309.8	309.1	310.2	311.1	311.7	316.2	313.2	312.2	312.2	311.7	309.2	310.2
2151	.633	251.4	1.734	310.4	309.5	310.2	310.2	310.0	310.2	315.2	313.2	312.2	311.2	311.2	309.2	309.2
2250	.276	251.4	1.760	310.7	310.2	310.2	310.2	309.7	310.8	315.2	313.2	312.2	311.7	311.7	309.2	310.2
2348	.959	251.3	1.784	311.0	310.4	310.5	310.2	310.4	310.7	316.2	313.2	312.2	312.2	312.2	310.2	310.2
2447	.697	250.5	1.808	311.6	310.9	310.6	310.4	311.0	311.7	316.2	313.2	310.7	311.7	312.2	310.7	311.2
2546	.503	249.7	1.831	312.2	312.3	311.6	312.0	312.2	312.0	316.2	313.2	311.2	312.2	312.2	310.2	311.2
2645	.728	248.7	1.847	310.8	310.3	310.5	310.3	309.8	308.3	315.2	314.2	312.2	312.2	313.2	311.2	312.2
2744	.602	248.2	1.869	309.6	309.0	309.0	309.4	308.5	307.9	314.7	313.2	312.2	312.2	312.2	311.7	312.2
2843	.483	247.6	1.890	308.7	308.5	308.1	308.5	308.0	307.6	313.2	312.2	311.2	312.2	311.2	311.2	311.2
2942	.405	247.3	1.911	308.9	308.5	307.5	307.8	307.4	308.0	313.2	312.7	311.2	312.2	312.2	311.2	311.2
3041	.429	244.5	1.931	309.1	308.7	308.0	308.0	308.5	308.9	313.2	312.2	311.2	311.2	312.2	311.2	311.2
3141	.279	233.1	1.942	309.2	308.8	309.1	308.9	308.7	309.0	313.2	312.2	310.2	311.2	312.2	311.2	311.2
3241	.289	222.2	1.952	309.3	309.4	308.6	308.9	308.8	308.7	313.2	311.2	310.2	310.7	311.2	310.7	310.7
33	***	***	1.958	309.5	309.3	309.3	309.2	308.8	308.7	313.2	310.2	310.2	310.2	310.2	309.2	310.2
34	***	***	1.960	308.4	308.2	308.5	308.9	308.5	308.1	312.2	310.2	310.2	310.2	310.2	309.2	309.7
35	***	***	1.961	306.6	307.5	308.1	308.2	307.8	307.5	312.2	310.2	309.2	309.2	309.2	308.2	308.2
36	***	***	1.962	306.4	307.3	307.7	308.0	307.5	307.4	311.2	309.7	308.2	308.2	308.7	307.2	308.2
37	***	***	1.962	306.6	306.6	307.0	307.6	307.1	307.0	311.2	310.2	308.2	308.2	309.2	307.2	308.2
38	***	***	1.962	305.7	306.4	307.3	307.5	306.8	307.0	310.2	309.2	307.7	307.7	308.2	306.2	307.7
39	***	***	1.961	306.0	306.2	306.3	306.7	306.6	306.5	310.2	309.2	307.2	307.2	308.2	306.2	307.2
40	***	***	1.960	306.1	306.0	306.1	306.4	306.2	306.1	310.2	309.2	307.2	307.2	307.2	306.2	307.2
45	***	***	1.957	305.7	305.3	304.9	305.0	304.9	304.2	308.2	307.7	306.2	306.2	306.2	305.2	306.2
50	***	***	1.954	303.0	302.6	302.6	302.7	303.2	303.3	307.2	306.2	304.2	305.2	305.2	303.7	305.2
55	***	***	1.952	302.4	301.9	301.9	302.0	302.3	302.4	306.2	305.7	304.2	304.7	304.2	303.2	304.7
60	***	***	1.950	302.0	301.4	301.5	301.6	302.1	301.8	305.2	305.2	304.2	304.2	303.2	301.2	303.2
65	***	***	1.949	302.4	301.9	302.2	302.0	302.0	301.8	304.2	304.2	304.2	303.2	302.2	301.2	302.2
70	***	***	1.947	302.3	302.0	302.1	302.1	302.2	302.2	303.2	303.2	303.2	303.2	302.2	301.2	302.2
75	***	***	1.946	302.3	301.5	302.0	302.0	302.0	302.0	303.2	303.2	303.2	302.7	302.2	301.2	302.2
80	***	***	1.944	302.3	301.7	301.6	301.5	301.8	301.8	303.2	302.7	303.2	303.2	303.2	301.2	302.7
85	***	***	1.943	302.3	301.5	301.5	301.5	301.8	301.5	303.2	302.2	303.2	303.2	303.2	302.2	303.2

COORDINATES

l	R (M)	THETA (DEG)	Z (M)
1	0.000	00	-0.586
2	0.000	00	-0.293
3	0.000	00	0.000
4	0.000	00	0.293
5	0.000	00	0.586
6	0.000	00	0.878
7	0.000	00	2.049
8	0.000	00	2.342
9	0.000	00	2.635
10	0.000	00	2.928
11	0.000	00	3.220
12	0.000	00	3.513
13	0.000	00	3.606

Table 17A — Scaling Run 245: Cluttered 324–m^3 Chamber, South 3.279-cm Nozzle

Time t (s)	Press Cyl P (atm)	T_c (K)	Chamber P (atm)	Chamber Absolute Temperatures (K) at Locations I 1	2	3	4	5	6	7	8	9	10	11	12	13
-5	***	***	1.006	298.6	298.1	298.1	298.6	298.5	298.4	300.2	299.2	300.2	300.2	300.2	300.2	299.2
-4	***	***	1.006	298.6	298.1	298.1	298.6	298.5	298.4	300.2	299.2	300.2	300.2	300.2	300.2	299.2
-3	***	***	1.006	298.6	298.1	298.1	298.6	298.5	298.4	300.2	299.2	300.2	300.2	300.2	300.2	299.2
-2	***	***	1.006	298.6	298.1	298.1	298.6	298.5	298.4	300.2	299.2	300.2	300.2	300.2	300.2	299.2
-1	***	***	1.006	298.6	298.1	298.1	298.6	298.5	298.4	300.2	299.2	300.2	300.2	300.2	300.2	299.2
096.378	337.2		1.006	298.8	298.2	298.1	298.6	298.6	298.7	300.2	299.2	300.2	300.2	300.2	300.2	299.2
189.605	297.5		1.037	303.8	302.7	301.5	302.4	303.1	303.8	300.2	300.2	301.2	301.2	301.2	300.2	300.2
286.714	285.6		1.093	308.2	307.3	307.2	308.0	308.5	308.4	303.2	302.7	304.7	304.7	304.7	303.7	303.2
384.136	280.7		1.146	310.8	310.0	309.4	309.6	310.2	310.2	306.2	306.2	308.2	308.2	308.2	307.2	306.2
481.660	276.3		1.195	312.4	312.0	311.5	311.8	312.2	312.9	308.7	308.7	311.2	311.7	311.2	309.7	308.7
579.592	275.0		1.233	314.5	313.1	314.3	313.8	313.8	313.5	311.0	310.5	313.2	313.5	313.2	311.0	310.5
676.650	273.2		1.286	315.6	313.0	314.4	314.7	315.2	315.2	314.2	312.7	315.7	315.7	315.7	312.7	312.7
774.150	272.3		1.329	316.5	315.9	316.2	316.3	316.7	316.8	315.2	314.2	317.2	317.2	317.2	315.2	314.2
872.503	270.6		1.356	316.5	316.1	316.7	316.5	315.9	315.6	316.2	315.2	317.2	318.2	318.2	316.2	316.2
970.136	270.2		1.396	316.2	316.0	316.6	316.9	316.9	316.8	317.7	316.7	318.7	318.2	318.2	317.2	316.7
1067.789	269.7		1.434	317.0	316.5	316.9	317.0	316.9	316.9	321.2	318.2	319.2	319.2	318.2	316.2	316.2
1165.497	269.2		1.471	318.5	317.7	317.3	317.8	318.1	317.8	323.2	318.2	320.7	320.7	320.7	316.7	316.7
1263.136	266.8		1.506	318.7	318.1	318.0	317.9	318.2	318.5	323.2	319.2	321.2	321.2	321.2	319.2	319.2
1360.663	266.9		1.540	318.7	318.2	318.7	319.5	319.2	319.2	325.2	321.2	322.7	322.2	321.7	319.2	318.2
1458.265	266.2		1.573	319.4	319.0	319.3	319.6	319.1	318.0	324.2	321.2	322.2	322.2	321.2	318.2	318.2
1556.782	265.3		1.594	318.0	317.8	318.9	319.2	318.7	318.4	325.2	321.2	322.2	322.2	322.2	319.2	319.2
1653.755	264.2		1.635	316.8	317.3	318.1	318.6	319.2	319.5	323.2	322.2	322.2	322.2	322.2	320.2	319.2
1752.347	263.9		1.655	317.4	317.0	318.2	319.1	319.5	320.3	324.2	323.2	322.2	323.2	323.2	320.2	320.2
1849.854	262.5		1.685	318.3	318.1	318.5	319.3	320.0	319.7	326.7	324.2	321.2	322.7	323.7	321.2	319.2
1947.327	261.7		1.713	319.8	319.4	319.7	319.4	319.9	319.6	327.2	324.2	322.2	323.2	324.2	322.2	321.2
2043.881	261.7		1.741	319.0	319.9	319.3	319.2	318.1	317.1	327.2	325.7	324.2	323.2	322.2	320.2	320.2
2132.517	260.6		1.767	318.3	317.9	317.9	318.2	317.8	317.7	327.2	327.2	326.2	325.2	323.2	321.2	321.2
2241.000	259.8		1.784	318.1	317.7	317.3	317.8	317.6	317.3	328.2	327.2	325.2	324.2	322.2	321.2	321.2
2338.969	259.9		1.810	317.3	317.3	318.5	318.2	317.8	317.8	328.7	327.2	324.2	324.2	322.7	321.2	321.2
2435.844	258.8		1.834	317.8	318.1	317.9	318.6	318.6	319.0	327.2	326.2	324.2	324.2	323.2	321.2	319.2
2531.388	257.6		1.858	318.2	318.0	318.5	318.8	317.5	317.3	326.2	325.2	325.2	324.2	324.2	321.7	319.7
2630.116	257.2		1.881	318.0	317.8	317.9	318.4	318.0	319.0	326.2	324.2	324.2	323.2	324.2	322.2	320.2
2726.942	256.4		1.903	317.6	318.6	318.7	319.4	319.8	320.9	325.7	324.2	324.7	323.2	322.2	320.7	320.7
2831.449	255.3		1.924	315.6	315.6	316.6	317.4	319.0	318.8	324.2	324.2	325.2	323.2	322.2	319.2	319.2
2933.585	247.8		1.938	316.0	316.3	317.3	317.8	317.5	317.4	325.2	325.2	325.2	324.2	322.2	319.2	318.2
3032.861	234.1		1.953	316.4	315.2	316.0	318.0	317.8	317.7	323.7	323.7	323.2	322.7	320.7	318.2	317.7
31	***	***	1.962	315.3	315.4	316.0	316.9	316.5	316.9	325.2	323.2	320.2	320.2	319.2	317.2	317.2
32	***	***	1.966	315.4	314.9	315.1	316.3	316.5	315.9	322.7	321.7	319.7	319.7	319.2	317.2	318.2
33	***	***	1.968	315.3	314.6	314.7	315.6	315.4	315.3	321.2	320.2	319.2	319.2	318.2	317.2	317.2
34	***	***	1.969	315.1	314.7	314.5	315.3	315.1	315.2	319.7	319.7	318.7	318.2	318.7	317.2	317.2
35	***	***	1.969	314.7	314.3	314.4	314.9	314.7	314.6	320.2	319.2	318.2	319.2	319.2	317.2	316.2
36	***	***	1.969	314.3	313.8	314.3	314.6	314.4	314.5	319.2	318.2	318.2	318.2	318.2	316.7	315.7
37	***	***	1.969	314.4	313.8	313.5	314.5	314.4	314.3	319.2	318.2	318.2	318.2	318.2	316.2	316.2
38	***	***	1.968	314.3	313.8	313.1	314.1	314.0	313.4	319.2	318.2	318.2	318.2	318.2	316.2	316.2
43	***	***	1.964	312.3	311.7	311.8	312.4	312.3	312.2	317.7	316.2	316.2	316.2	316.2	313.7	314.7
48	***	***	1.961	312.0	310.9	311.1	311.1	311.3	310.8	316.2	313.7	316.2	315.5	314.7	311.5	312.0
53	***	***	1.959	311.6	310.7	310.1	310.0	310.2	310.0	315.2	313.2	313.2	314.2	314.2	312.2	311.2
58	***	***	1.956	310.7	310.3	310.2	309.8	311.0	310.4	314.2	312.2	313.2	313.2	313.2	312.2	311.2
63	***	***	1.955	310.5	309.6	309.9	309.8	310.1	310.0	313.2	312.2	312.2	313.2	313.2	312.2	312.2
68	***	***	1.953	310.0	309.6	309.9	310.0	310.2	309.6	312.2	311.2	313.2	313.2	313.2	311.2	311.2
73	***	***	1.951	310.2	309.5	309.5	309.7	309.8	309.5	312.2	311.2	313.2	313.2	312.2	310.2	311.2
78	***	***	1.950	310.2	309.6	309.5	309.7	309.8	309.5	312.2	311.2	312.2	312.2	312.2	310.2	310.2
83	***	***	1.949	310.2	309.7	309.7	309.8	309.9	309.6	312.2	311.2	312.2	312.2	312.2	311.2	310.2
88	***	***	1.947	310.5	310.0	310.0	310.2	310.0	309.9	312.2	310.2	312.2	311.2	312.2	311.2	310.2
98	***	***	1.945	310.6	309.8	309.6	309.4	310.2	310.1	311.2	310.2	311.2	312.2	312.2	311.2	310.2

COORDINATES

I	R (M)	THETA (DEG)	Z (M)
1	0.000	00	-0.586
2	0.000	00	-0.293
3	0.000	00	0.000
4	0.000	00	0.293
5	0.000	00	0.586
6	0.000	00	0.878
7	0.000	00	2.049
8	0.000	00	2.342
9	0.000	00	2.635
10	0.000	00	2.928
11	0.000	00	3.220
12	0.000	00	3.513
13	0.000	00	3.806

Table 18A — Scaling Run 246: Cluttered 324–m³ Chamber, South 3.279-cm Nozzle

Time t (s)	Press Cyl P (atm)	T_c (K)	Chamber P (atm)	Chamber Absolute Temperatures (K) at Locations I 1	2	3	4	5	6	7	8	9	10	11	12	13
-5	***	***	1.005	289.0	288.6	288.5	288.9	288.9	288.8	290.2	289.2	290.2	290.2	290.2	290.2	289.2
-4	***	***	1.005	289.0	288.6	288.5	288.9	288.9	288.8	290.2	289.2	290.2	290.2	290.2	290.2	289.2
-3	***	***	1.005	289.0	288.6	288.6	288.9	288.9	288.8	290.2	289.2	290.2	290.2	290.2	290.2	289.2
-2	***	***	1.005	289.0	288.6	288.6	288.9	288.9	288.8	290.2	289.2	290.2	290.2	290.2	290.2	289.2
-1	***	***	1.005	289.0	288.6	288.6	288.9	288.9	288.8	290.2	289.2	290.2	290.2	290.2	290.2	289.2
092.412	290.4		1.005	289.1	288.6	288.5	288.9	288.9	288.8	290.2	289.2	290.2	290.2	290.7	290.2	289.2
185.361	299.6		1.031	292.9	291.6	290.5	291.3	291.7	292.1	290.2	290.2	291.2	291.2	291.2	291.2	290.2
283.119	275.0		1.085	297.1	295.9	294.7	295.6	296.3	296.7	293.2	292.7	294.7	294.2	294.7	293.7	293.2
380.884	268.4		1.136	299.8	298.7	298.5	299.2	300.0	299.9	296.2	296.2	298.2	298.2	298.2	297.2	296.2
478.684	264.9		1.183	302.2	301.2	301.1	301.5	301.7	301.5	299.7	297.7	300.2	300.7	301.2	299.2	298.2
576.537	262.9		1.228	303.1	302.4	302.1	302.4	303.0	303.5	301.2	300.2	302.2	303.2	303.2	301.2	300.2
674.330	263.1		1.270	304.9	304.0	304.0	304.2	304.2	304.2	303.7	302.2	304.7	304.7	304.7	302.2	302.2
772.156	261.1		1.312	305.1	304.4	304.8	305.3	305.7	305.4	305.2	304.2	306.2	306.2	307.2	304.2	303.2
870.054	261.7		1.351	305.1	304.5	304.6	305.2	305.7	305.3	306.2	305.7	307.7	307.7	307.2	305.2	304.7
967.959	259.8		1.389	305.4	305.4	305.2	306.1	306.4	306.4	308.2	307.2	308.2	308.2	308.2	305.2	305.2
1065.918	258.5		1.425	305.2	305.3	305.7	307.1	307.1	307.5	310.7	308.2	309.2	309.2	309.2	306.2	306.2
1164.048	258.2		1.460	306.8	306.3	306.8	307.4	307.8	308.4	311.2	310.2	309.2	309.2	309.2	307.2	307.2
1262.748	257.7		1.482	307.9	307.0	306.7	307.7	308.5	309.4	313.2	313.2	310.2	310.2	310.2	308.2	308.2
1360.946	256.7		1.515	309.4	308.7	308.5	308.9	309.5	310.0	313.2	312.7	310.7	310.2	310.2	308.7	308.7
1459.177	255.6		1.547	308.7	307.7	307.8	308.7	308.7	308.9	315.2	313.2	311.2	311.2	311.2	310.2	309.2
1557.531	255.1		1.578	308.5	307.6	307.1	308.0	307.9	307.6	314.7	314.2	311.7	311.2	311.2	309.7	309.2
1655.918	254.3		1.608	307.7	306.7	307.1	307.6	307.0	306.8	314.2	313.2	311.2	311.2	311.2	309.2	309.2
1754.388	254.0		1.636	307.4	307.0	306.8	307.9	307.3	306.8	314.7	313.2	311.2	310.7	310.2	308.7	308.2
1852.891	253.4		1.664	307.8	307.2	306.8	307.8	308.1	308.0	314.2	312.2	311.2	311.2	310.2	309.2	309.2
1951.939	252.6		1.682	308.0	307.8	308.1	308.2	308.5	308.0	313.2	312.2	311.2	311.2	311.2	309.2	308.2
2050.531	251.5		1.709	309.3	308.3	308.6	308.9	309.1	309.2	314.2	312.2	312.2	312.2	312.2	309.7	309.2
2149.218	250.4		1.735	308.4	308.8	309.2	308.8	309.3	309.1	315.2	313.2	312.2	312.2	311.2	310.2	309.2
2247.952	250.4		1.760	307.8	308.7	309.5	309.5	308.1	307.4	315.7	312.2	312.2	311.7	311.2	309.7	309.2
2346.721	249.3		1.784	307.3	306.8	307.2	307.4	307.0	306.9	315.2	315.2	312.2	312.2	310.2	309.2	310.2
2445.551	248.3		1.807	306.6	306.4	306.4	307.1	306.8	306.6	316.7	314.2	312.2	312.2	310.7	309.2	310.2
2544.374	247.9		1.830	307.0	306.8	307.3	307.7	307.8	307.5	318.2	315.2	312.2	311.2	310.2	309.2	309.2
2643.646	247.5		1.845	306.5	305.9	306.1	306.3	306.7	308.1	318.2	314.2	311.2	310.2	310.2	308.2	308.2
2742.575	246.9		1.868	307.9	307.0	306.8	307.1	307.1	306.6	317.7	314.2	311.7	311.7	311.7	308.2	308.7
2841.537	246.4		1.889	308.5	307.7	307.7	307.5	307.9	308.0	317.2	314.2	311.2	311.2	312.2	310.2	309.2
2940.541	245.1		1.910	305.5	305.7	306.6	307.5	307.1	305.3	315.7	312.7	312.2	311.7	311.7	310.2	308.7
3039.558	244.0		1.930	306.4	306.0	306.1	306.8	306.8	306.6	315.2	313.2	311.2	311.2	312.2	310.2	308.2
3139.119	234.6		1.947	305.5	305.2	306.2	306.5	306.7	305.4	315.2	312.7	311.7	311.2	311.7	310.2	308.7
3239.061	223.2		1.957	304.5	304.9	305.1	305.7	305.6	305.5	315.2	311.2	310.2	310.2	311.2	310.2	308.2
33	***	***	1.961	304.9	304.5	304.9	305.5	306.1	305.7	313.2	310.2	309.2	309.2	310.2	309.2	308.2
34	***	***	1.964	304.5	304.0	304.3	304.8	304.8	304.9	313.2	310.7	309.7	309.2	309.2	307.7	307.7
35	***	***	1.966	303.8	303.6	304.0	304.7	304.6	305.2	312.2	310.2	309.2	308.2	308.2	307.2	307.2
36	***	***	1.967	303.9	303.4	303.6	304.2	304.1	304.9	311.2	310.2	308.2	308.2	307.7	306.2	306.2
37	***	***	1.967	303.5	303.1	303.1	303.7	303.9	303.9	311.2	309.2	308.2	307.2	307.2	305.2	305.2
38	***	***	1.967	303.8	303.1	303.0	303.3	303.2	303.3	309.7	309.2	307.2	307.2	306.7	304.7	304.7
39	***	***	1.966	303.8	303.1	302.9	303.0	303.1	303.1	309.2	309.2	307.2	306.2	306.2	303.2	304.2
40	***	***	1.966	303.7	303.1	303.5	303.4	303.6	303.9	308.7	308.2	306.2	306.2	305.7	303.2	304.2
45	***	***	1.963	302.3	302.2	301.8	303.0	303.1	302.7	306.2	305.7	304.2	305.2	304.2	302.2	303.2
50	***	***	1.960	300.4	300.0	300.1	300.3	300.9	300.4	304.2	304.2	304.2	305.2	303.7	301.2	302.2
55	***	***	1.958	300.2	299.4	299.4	299.5	300.2	300.2	304.2	304.2	303.2	303.2	303.2	301.2	302.2
60	***	***	1.956	300.4	299.9	299.8	300.0	299.9	299.7	304.2	303.2	303.2	303.2	302.2	301.2	302.2
65	***	***	1.954	300.9	300.4	300.3	300.4	300.2	299.9	303.2	302.2	303.2	303.2	302.2	299.2	301.2
70	***	***	1.953	300.6	300.6	300.2	300.7	300.4	300.3	302.2	301.7	303.2	302.2	301.7	299.2	301.2
75	***	***	1.951	300.2	300.0	299.9	300.0	300.5	300.3	302.2	301.2	302.2	302.2	301.2	298.7	300.2
80	***	***	1.950	300.0	299.7	299.7	299.8	299.7	300.2	302.2	301.2	302.2	302.2	301.2	299.2	300.2
85	***	***	1.949	299.9	299.7	299.7	299.7	299.6	299.7	302.2	301.2	302.2	302.2	301.2	300.2	300.2

I	COORDINATES R (M)	THETA (DEG)	Z (M)
1	0.000	00	-0.586
2	0.000	00	-0.293
3	0.000	00	0.000
4	0.000	00	0.293
5	0.000	00	0.586
6	0.000	00	0.878
7	0.000	00	2.049
8	0.000	00	2.342
9	0.000	00	2.635
10	0.000	00	2.928
11	0.000	00	3.220
12	0.000	00	3.513
13	0.000	00	3.606

Table 19A — Scaling Run 247: Cluttered 324–m^3 Chamber, South 3.279-cm Nozzle

Time t (s)	Press Cyl P (atm)	T_s (K)	Chamber P (atm)	Chamber Absolute Temperatures (K) at Locations I 1	2	3	4	5	6	7	8	9	10	11	12	13
-5	***	***	1.000	291.8	291.4	291.3	291.7	291.7	291.5	292.2	291.2	293.2	293.2	292.2	292.2	292.2
-4	***	***	1.000	291.8	291.4	291.3	291.7	291.7	291.6	292.2	291.2	293.2	293.2	292.2	292.2	292.2
-3	***	***	1.000	291.8	291.4	291.3	291.7	291.7	291.6	292.2	291.2	293.2	293.2	292.2	292.2	292.2
-2	***	***	1.000	291.9	291.4	291.3	291.7	291.7	291.6	292.2	291.2	293.2	293.2	292.2	292.2	292.2
-1	***	***	1.000	291.8	291.4	291.3	291.7	291.7	291.6	292.2	291.2	293.2	293.2	292.2	292.2	292.2
098.306		311.3	1.000	292.1	291.5	291.3	291.8	291.9	292.0	292.2	291.2	293.2	293.2	292.7	292.2	292.2
190.068		291.9	1.016	295.0	293.8	293.0	293.8	294.4	295.0	292.2	292.2	293.2	293.2	293.2	292.2	292.2
288.248		285.5	1.073	299.0	297.8	297.1	296.6	297.6	298.3	294.7	294.2	296.2	295.7	296.7	295.2	295.2
385.694		275.7	1.126	302.5	301.6	301.0	301.3	302.0	302.3	296.2	297.2	300.2	300.2	301.2	299.2	298.2
483.221		272.0	1.175	305.1	304.2	303.6	304.2	304.8	305.1	300.7	299.7	302.2	302.7	302.7	301.2	300.7
580.748		268.3	1.221	306.1	305.7	305.8	306.1	306.4	306.5	303.2	302.2	303.2	304.2	304.2	303.2	303.2
678.367		267.6	1.266	306.8	306.8	306.6	307.5	308.5	308.1	304.7	304.7	306.2	306.2	306.7	305.7	304.7
775.993		265.4	1.308	307.9	307.1	306.9	308.4	309.8	308.1	307.2	306.2	308.2	308.2	308.2	307.2	306.2
874.449		265.6	1.335	309.0	308.5	308.8	309.3	309.8	309.5	308.2	307.2	309.2	308.2	309.2	307.2	307.2
972.197		264.9	1.374	311.0	310.1	310.2	310.6	311.0	311.2	310.2	308.7	310.2	310.2	310.7	307.7	307.7
1069.973		263.1	1.412	310.2	309.6	309.0	309.4	309.6	309.5	312.2	310.2	312.2	312.2	312.2	309.2	309.2
1167.939		262.5	1.449	309.5	309.2	309.2	310.1	310.8	312.0	312.7	311.2	312.7	312.2	311.2	309.7	309.2
1265.864		261.2	1.483	309.7	309.3	310.4	310.2	311.2	310.3	314.2	311.2	312.2	313.2	312.2	309.2	309.2
1363.929		261.1	1.517	309.7	308.8	310.0	310.7	312.0	311.7	316.2	313.7	313.7	313.7	314.2	311.2	311.7
1462.048		260.4	1.550	311.2	310.7	310.7	311.2	312.0	312.0	317.2	315.2	313.2	314.2	314.2	313.2	313.2
1560.258		259.5	1.582	314.0	312.8	312.6	311.6	311.4	311.5	318.7	316.7	314.7	314.7	313.7	311.7	311.7
1658.524		258.3	1.613	310.7	309.7	310.0	311.2	311.0	312.0	321.2	317.2	315.2	314.2	314.2	311.2	310.2
1757.361		257.9	1.632	310.4	310.2	310.3	311.4	313.1	314.2	321.2	316.2	315.2	315.2	314.2	310.2	310.2
1855.799		257.0	1.661	311.6	311.2	310.2	312.7	314.1	314.0	321.2	318.2	315.2	315.2	314.7	311.2	311.2
1954.231		256.1	1.689	310.8	311.1	311.4	311.8	311.5	311.5	321.2	320.2	316.2	315.2	316.2	314.2	314.2
2052.772		255.7	1.717	312.0	311.7	312.4	312.0	311.5	311.3	321.7	317.2	314.7	314.7	314.2	312.7	312.2
2151.333		254.7	1.743	312.4	311.3	310.9	311.2	310.9	311.2	320.2	315.2	314.2	313.2	312.2	311.2	311.2
2249.959		254.5	1.769	311.6	311.2	310.9	311.3	311.6	311.3	320.7	315.7	314.2	313.2	312.7	310.7	310.7
2348.653		253.5	1.794	309.7	310.0	309.5	310.6	310.1	310.2	321.2	315.2	314.2	313.2	313.2	310.2	311.2
2447.789		252.9	1.810	310.9	310.8	310.2	310.9	310.7	311.0	320.2	315.2	313.2	313.2	313.2	312.2	312.2
2546.548		252.2	1.834	309.5	309.4	309.4	310.1	309.5	309.0	320.2	316.7	314.2	314.2	314.2	312.7	313.2
2645.354		251.4	1.857	309.7	308.9	308.5	310.2	310.2	309.5	320.2	318.2	315.2	315.2	316.2	314.2	313.2
2744.224		251.2	1.880	310.2	309.5	309.6	309.7	310.0	310.0	319.7	318.7	315.7	314.7	314.7	313.2	312.7
2843.116		250.2	1.902	311.6	311.0	310.9	310.7	310.9	310.3	320.2	317.2	315.2	314.2	314.2	313.2	311.2
2942.408		249.7	1.917	311.7	311.7	311.3	311.2	311.9	312.1	320.2	317.2	314.2	314.2	313.2	312.2	311.2
3041.592		244.6	1.937	311.0	310.5	310.5	311.2	310.9	309.4	319.2	317.2	314.2	313.7	312.7	310.7	309.7
3140.755		231.2	1.952	310.7	310.4	310.6	310.3	308.8	309.1	320.2	315.2	314.2	313.2	312.2	310.2	309.2
32	***	***	1.960	310.5	310.2	309.6	309.3	308.5	308.7	317.2	314.2	313.2	312.2	312.2	309.7	309.7
33	***	***	1.964	309.8	309.4	309.3	309.2	308.7	308.5	314.2	313.2	312.2	312.2	311.2	310.2	310.2
34	***	***	1.966	309.0	308.7	308.8	308.8	308.4	308.1	313.2	312.7	312.2	312.7	310.7	309.2	310.2
35	***	***	1.967	308.6	308.3	308.3	308.5	308.4	308.2	313.2	312.2	312.2	312.2	311.2	309.2	309.2
36	***	***	1.968	308.3	308.1	308.1	308.3	308.2	308.1	313.2	312.2	312.2	311.2	311.2	309.2	308.2
37	***	***	1.968	308.0	307.6	307.9	308.1	307.9	307.8	312.7	311.7	310.7	311.2	311.2	309.2	309.2
38	***	***	1.967	308.0	307.7	307.7	308.0	307.6	307.6	311.2	310.2	310.2	310.2	310.2	309.2	308.2
39	***	***	1.966	307.5	307.5	307.6	307.6	307.5	307.2	311.2	311.2	309.7	309.7	310.2	308.7	308.2
44	***	***	1.963	306.7	306.7	306.8	307.2	306.7	306.1	308.7	309.2	306.7	306.7	306.7	304.7	306.2
49	***	***	1.960	305.4	305.2	304.6	305.4	305.1	305.1	307.2	307.2	305.2	306.2	306.2	303.2	305.2
54	***	***	1.958	304.2	303.4	303.2	303.8	303.4	303.3	307.2	306.2	306.2	306.2	306.2	303.2	305.2
59	***	***	1.956	303.4	302.9	302.8	302.9	303.3	303.0	306.2	305.2	305.2	305.2	304.2	301.2	304.2
64	***	***	1.954	303.1	302.7	302.9	302.9	303.1	302.8	306.2	304.2	305.2	305.2	305.2	302.2	303.2
69	***	***	1.953	303.1	302.6	302.7	303.1	303.1	302.9	305.2	304.2	305.2	305.2	305.2	303.2	304.2
74	***	***	1.951	303.2	302.7	302.7	303.1	303.1	302.9	305.2	304.2	304.7	304.2	304.2	303.2	304.2
79	***	***	1.950	303.5	302.9	302.8	303.1	303.0	302.5	304.2	304.2	304.2	304.2	304.2	302.2	303.2
84	***	***	1.949	303.9	303.1	303.1	303.0	302.7	302.3	304.2	303.2	304.2	304.2	304.2	302.2	303.2
89	***	***	1.947	303.8	303.3	303.0	303.1	302.5	302.1	304.2	303.2	304.2	304.2	304.2	302.2	303.2

COORDINATES

I	R (M)	THETA (DEG)	Z (M)
1	0.000	00	-0.586
2	0.000	00	-0.293
3	0.000	00	0.000
4	0.000	00	0.293
5	0.000	00	0.586
6	0.000	00	0.878
7	0.000	00	2.049
8	0.000	00	2.342
9	0.000	00	2.635
10	0.000	00	2.928
11	0.000	00	3.220
12	0.000	00	3.513
13	0.000	00	3.606

Table 20A — Scaling Run 248: Cluttered 324–m³ Chamber, South 3.279-cm Nozzle

Time t (s)	Press Cyl P (atm)	T (K)	Chamber P (atm)	Chamber Absolute Temperatures (K) at Locations I 1	2	3	4	5	6	7	8	9	10	11	12	13
-5	***	***	.996	295.7	295.2	295.2	295.6	295.5	295.4	296.2	295.2	296.2	296.2	296.2	296.2	295.2
-4	***	***	.996	295.7	295.2	295.2	295.6	295.5	295.4	296.2	295.2	296.2	296.2	296.2	296.2	295.2
-3	***	***	.996	295.7	295.2	295.2	295.6	295.5	295.4	296.2	295.2	296.2	296.2	296.2	296.2	295.2
-2	***	***	.996	295.7	295.2	295.2	295.6	295.5	295.4	296.2	295.2	296.2	296.2	296.2	296.2	295.2
-1	***	***	.996	295.7	295.2	295.2	295.6	295.5	295.4	296.2	295.2	296.2	296.2	296.2	296.2	295.2
098.190	331.1		.996	296.4	295.6	295.2	295.7	295.9	296.2	296.2	295.2	296.2	296.2	296.2	296.2	295.2
188.690	288.8		1.026	303.1	302.3	301.3	302.0	302.9	303.1	296.7	296.2	297.2	297.2	297.2	296.7	296.2
287.878	281.7		1.082	305.1	304.5	304.2	304.4	305.1	305.1	299.2	298.2	301.2	301.2	302.2	300.2	300.2
385.395	277.8		1.134	306.7	305.9	305.9	306.1	307.0	307.1	301.7	301.7	303.7	304.2	304.2	302.7	302.7
482.871	273.9		1.182	309.5	308.6	308.4	308.7	309.3	309.3	304.2	304.2	306.2	306.2	306.2	305.2	305.2
580.452	271.8		1.228	310.5	309.5	309.5	309.6	309.8	310.2	307.2	306.2	308.7	309.2	309.2	306.7	308.2
677.932	271.0		1.272	311.6	310.9	310.4	311.3	311.7	311.6	309.2	308.2	310.2	311.2	312.2	310.2	311.2
775.684	269.5		1.313	312.2	311.8	311.5	312.3	313.0	313.0	311.7	310.7	312.7	313.2	313.7	312.7	312.2
873.293	268.9		1.354	312.9	312.9	313.5	314.2	314.6	314.2	313.2	311.2	313.2	314.2	314.2	314.2	313.2
971.810	268.0		1.380	313.6	313.5	313.8	314.4	314.9	314.7	314.2	313.2	314.2	314.2	315.2	313.2	314.2
1069.619	267.0		1.417	314.3	314.0	314.0	314.5	315.2	315.1	314.7	314.7	315.7	315.7	314.7	313.7	313.7
1167.476	266.0		1.454	314.9	315.2	314.7	314.9	314.3	314.2	317.2	316.2	316.2	316.2	316.2	314.2	313.2
1265.442	265.1		1.488	315.2	314.0	313.9	314.7	314.6	315.1	316.7	315.7	316.2	316.7	317.2	314.7	314.7
1363.510	264.8		1.522	314.6	314.3	314.5	315.1	315.6	315.4	318.2	316.2	316.2	317.2	317.2	315.2	315.2
1461.650	263.6		1.554	315.2	314.5	313.8	314.4	314.9	314.7	318.7	316.7	317.2	317.2	316.2	314.2	314.2
1559.830	262.6		1.586	315.1	314.9	314.0	314.2	313.6	315.2	320.2	317.2	318.2	318.2	317.2	314.2	315.2
1658.673	261.8		1.606	316.1	315.6	315.4	315.5	315.5	315.6	320.2	316.2	318.2	317.2	316.2	315.2	315.2
1757.010	261.7		1.636	315.2	316.4	316.6	316.7	316.7	317.2	320.2	317.7	318.2	317.2	317.2	315.7	316.2
1855.381	260.8		1.665	315.8	315.4	315.2	315.4	315.0	315.7	321.2	318.2	320.2	317.2	317.2	315.2	315.2
1953.850	260.6		1.692	315.2	314.6	314.1	313.8	313.2	314.2	322.7	319.7	318.7	317.7	316.7	315.7	316.2
2052.395	259.3		1.719	314.7	313.8	313.8	313.1	312.8	313.1	324.2	321.2	320.2	319.2	318.2	317.2	318.2
2150.963	258.8		1.745	315.0	314.2	313.8	314.0	314.0	314.7	323.2	320.2	319.2	318.7	318.2	318.2	317.7
2249.626	257.8		1.771	315.8	315.6	315.5	315.1	315.2	315.8	322.2	319.2	319.2	318.2	319.2	318.2	317.2
2348.735	257.6		1.788	316.1	315.2	315.1	315.1	314.5	315.1	321.2	319.2	318.2	319.2	317.2	316.2	315.2
2447.469	256.8		1.812	315.2	314.5	316.5	315.5	315.3	314.6	320.7	319.2	318.7	318.7	318.7	317.2	317.2
2546.218	255.6		1.835	314.6	314.5	314.4	315.1	314.6	314.6	319.2	319.2	319.2	318.2	318.2	318.2	317.2
2645.071	255.3		1.858	314.6	314.2	314.6	315.2	315.2	315.3	320.2	319.2	319.7	318.7	319.7	318.2	316.2
2743.932	254.0		1.880	314.4	313.6	313.4	313.8	313.6	314.0	320.2	319.2	318.2	318.2	319.2	318.2	316.2
2843.177	254.2		1.894	312.0	312.3	312.8	313.4	314.0	314.6	321.2	319.2	318.2	318.2	319.2	317.2	315.2
2942.102	253.8		1.915	312.9	313.6	314.4	314.6	315.2	315.4	321.7	319.2	318.2	318.2	317.7	316.2	314.7
3041.102	248.6		1.936	312.7	312.3	313.5	313.7	313.8	314.1	322.2	319.2	318.2	318.2	318.2	316.2	316.2
3140.544	240.1		1.952	312.9	312.3	312.4	312.2	313.2	313.1	321.2	318.2	318.2	317.7	317.7	315.2	315.2
3240.782	235.5		1.964	313.1	312.6	312.7	313.0	312.3	312.0	321.2	318.2	318.2	317.2	317.2	316.2	316.2
33	***	***	1.970	313.3	312.5	312.6	312.7	312.5	311.9	321.2	317.7	316.7	316.2	316.2	315.7	315.2
34	***	***	1.973	313.0	312.3	312.5	312.8	312.8	312.6	321.2	317.2	316.2	316.2	315.2	315.2	314.2
35	***	***	1.974	312.0	311.9	312.0	311.8	312.0	312.2	319.2	317.2	316.2	316.2	315.2	314.2	314.2
36	***	***	1.975	311.9	311.6	311.5	311.5	311.8	312.2	319.2	316.7	315.7	315.2	315.2	313.7	313.2
37	***	***	1.975	310.8	310.6	310.7	311.4	311.8	312.3	318.2	315.2	314.2	315.2	314.2	313.2	313.2
38	***	***	1.974	310.7	310.4	310.9	312.0	311.9	312.1	317.2	315.2	314.2	314.2	314.2	313.2	312.7
39	***	***	1.974	310.9	310.5	311.1	311.6	311.6	311.8	316.2	315.2	314.2	313.2	313.2	312.2	312.2
40	***	***	1.973	310.9	310.7	310.8	311.5	311.2	311.6	316.2	315.2	314.2	313.2	313.2	312.2	312.2
45	***	***	1.970	310.2	309.9	309.3	310.2	310.0	309.5	313.7	312.2	312.7	312.7	312.7	311.2	311.2
50	***	***	1.967	308.4	308.0	307.8	307.8	308.0	307.6	312.2	310.2	310.7	311.7	311.2	310.2	310.2
55	***	***	1.965	308.1	307.3	307.6	307.0	306.9	307.1	311.2	310.2	309.2	311.2	310.2	309.2	309.2
60	***	***	1.963	307.5	307.2	307.2	307.3	307.5	306.7	310.2	309.2	309.2	309.2	309.2	308.2	308.2
65	***	***	1.962	307.3	306.9	306.6	306.8	307.0	306.9	309.2	308.2	308.2	308.2	308.2	306.2	307.2
70	***	***	1.960	306.8	306.2	306.6	307.0	306.8	307.0	308.2	307.2	308.2	308.2	307.2	305.2	307.2
75	***	***	1.958	307.0	306.1	305.9	306.4	307.1	307.0	308.2	306.2	308.2	308.2	307.2	305.2	306.2
80	***	***	1.957	306.7	306.6	306.1	306.2	306.3	306.7	307.2	306.2	308.2	308.2	308.2	306.2	307.2
85	***	***	1.956	306.7	306.4	305.9	306.2	306.2	306.2	307.2	306.2	307.2	307.2	307.2	306.2	307.2

COORDINATES

I	R (M)	THETA (DEG)	Z (M)
1	0.000	00	-0.586
2	0.000	00	-0.293
3	0.000	00	0.000
4	0.000	00	0.293
5	0.000	00	0.586
6	0.000	00	0.878
7	0.000	00	2.049
8	0.000	00	2.342
9	0.000	00	2.635
10	0.000	00	2.928
11	0.000	00	3.220
12	0.000	00	3.513
13	0.000	00	3.806

B-Tables

Tables 2B to 20B, called B-tables, present the pressurant mole fraction histories as inferred from the l-location temperature histories from the A-tables. The basis of this data reduction program (see Appendix B) is the transient thermodynamic analysis by Corlett et al. [2]. Reference 5 gives this analysis in more detail.

In addition to pressurant concentrations at each l-location corresponding to those in the matching A-tables, values of the mean pressurant concentration $\bar{X}$ are given. These values represent theoretical perfect mixing; they are determined from the known amount of resident gas initially in the chamber and the estimated amount of pressurant gas injected during any given time interval. Further, in the first six columns of the table, variables are given, respectively, as follows:

(1) time t in seconds,

(2) mean temperature of chamber contents $\bar{T}$ in °C,

(3) mean temperature of resident air $\bar{T}_a$ in °C,

(4) mean temperature of pressurant gas $\bar{T}_p$ in °C,

(5) dimensionless parameter-characterizing molar heat-transfer coefficient β, and

(6) the ratio β/θ, where θ is a characteristic time in seconds.

Table 2B — Inferred Pressurant Distribution, Scaling Run 230; Three 3.279-cm Nozzles

t (s)	$\bar{T}$ (°C)	$\bar{T}_a$ (°C)	$\bar{T}_p$ (°C)	β	β/θ	$\bar{X}$	Pressurant Fractions (X) at Locations l: $l = 1$	2	3	4	5	6	7	8	9	10	11	12	13
CONMENCE VALVE OPENING																			
0.0	16.1	16.1	15.9	1.6	0.0000	0.000	0.000	0.000	0.000	0.000	0.000	0.000	0.000	0.000	0.000	0.000	0.000	0.000	
1.0	21.9	24.9	-7.4	9.5	.9170	.092	.102	.095	.071	.077	.083	.117	.102	.117	.086	.086	.102	.086	.071
VALVE FULLY OPEN																			
2.0	25.5	31.4	-4.3	6.1	.5091	.165	.187	.179	.142	.159	.173	.195	.134	.176	.176	.162	.176	.148	.134
3.0	27.7	36.3	-2.1	5.7	.4124	.223	.251	.248	.204	.230	.248	.290	.175	.214	.214	.188	.227	.214	.201
4.0	29.1	40.0	-.4	5.7	.3489	.269	.319	.289	.264	.282	.304	.331	.232	.257	.257	.232	.257	.245	.232
5.0	30.5	43.7	.5	3.6	.1882	.307	.357	.338	.306	.329	.359	.382	.234	.292	.292	.269	.280	.269	.280
6.0	31.1	46.3	1.2	4.7	.2232	.339	.391	.352	.325	.354	.383	.409	.283	.338	.327	.305	.338	.305	.294
7.0	31.0	47.9	1.9	6.4	.2801	.367	.410	.389	.354	.384	.413	.434	.310	.343	.343	.343	.376	.343	.332
8.0	31.2	49.3	2.0	3.9	.0967	.383	.421	.404	.378	.400	.429	.450	.332	.385	.364	.342	.374	.342	.353
CONMENCE VALVE CLOSURE																			
9.0	31.3	51.1	2.0	4.3	.1525	.404	.444	.426	.408	.418	.444	.471	.347	.398	.387	.357	.398	.377	.377
10.0	31.0	52.3	2.0	1.7	.1673	.423	.469	.444	.416	.438	.471	.495	.372	.422	.422	.382	.412	.382	.372
VALVE FULLY CLOSED																			
11.0	30.1	52.9	.8	1.4	.1464	.437	.478	.461	.428	.451	.480	.499	.399	.428	.428	.409	.418	.409	.399
12.0	31.6	56.2	.1	-2.6	-.2610	.437	.480	.467	.439	.458	.483	.505	.392	.419	.419	.401	.428	.401	.392
13.0	31.5	55.9	.1	.2	.0249	.437	.488	.475	.450	.465	.488	.510	.391	.427	.409	.391	.418	.391	.382
14.0	31.2	55.2	.3	.5	.0506	.437	.488	.472	.446	.461	.492	.508	.397	.425	.425	.388	.416	.388	.379
15.0	30.9	54.5	.4	.5	.0517	.437	.487	.471	.447	.465	.495	.513	.393	.421	.421	.402	.412	.384	.375
16.0	30.7	54.2	.5	.3	.0262	.437	.493	.479	.449	.467	.493	.519	.387	.415	.415	.397	.406	.378	.387
17.0	30.6	53.9	.6	.3	.0265	.437	.501	.477	.450	.469	.495	.516	.381	.409	.409	.390	.418	.390	.381
18.0	30.3	53.2	.7	.5	.0539	.437	.494	.473	.443	.460	.490	.523	.389	.418	.418	.389	.409	.389	.389
19.0	30.1	52.9	.8	.3	.0274	.437	.500	.475	.448	.467	.490	.523	.400	.410	.410	.391	.400	.391	.381
20.0	29.9	52.5	.9	.3	.0277	.437	.502	.477	.458	.479	.497	.516	.375	.404	.404	.384	.413	.384	.394
21.0	29.8	52.2	1.0	.3	.0280	.437	.505	.483	.458	.479	.497	.512	.374	.403	.403	.383	.413	.383	.393
22.0	29.6	51.8	1.1	.3	.0283	.437	.504	.480	.453	.474	.492	.510	.378	.417	.407	.378	.407	.388	.398
23.0	29.5	51.5	1.2	.3	.0286	.437	.504	.482	.456	.472	.490	.514	.387	.417	.397	.377	.407	.397	.387
24.0	29.3	51.2	1.2	.3	.0290	.437	.508	.484	.454	.466	.486	.504	.382	.412	.402	.392	.412	.402	.382
25.0	29.2	50.8	1.3	.3	.0293	.437	.505	.483	.451	.465	.477	.503	.380	.431	.410	.390	.400	.390	.400
26.0	29.0	50.5	1.4	.3	.0296	.437	.500	.482	.443	.458	.472	.507	.401	.431	.431	.390	.401	.390	.380
27.0	28.9	50.1	1.5	.3	.0300	.437	.503	.485	.450	.464	.476	.503	.396	.427	.407	.386	.417	.386	.386
28.0	28.7	49.8	1.6	.3	.0304	.437	.503	.472	.441	.461	.482	.507	.391	.422	.401	.401	.412	.401	.391
29.0	28.7	49.8	1.6	0.0	0.0000	.437	.499	.472	.441	.464	.486	.515	.391	.422	.422	.401	.412	.391	.370
30.0	28.6	49.5	1.7	.3	.0308	.437	.499	.473	.444	.465	.492	.515	.388	.419	.419	.398	.409	.377	.388
31.0	28.4	49.1	1.8	.3	.0311	.437	.497	.472	.445	.466	.497	.514	.386	.417	.417	.386	.407	.396	.386
32.0	28.2	48.8	1.8	.3	.0315	.437	.497	.478	.450	.471	.501	.522	.386	.418	.397	.375	.407	.397	.386
33.0	28.2	48.8	1.8	0.0	0.0000	.437	.499	.476	.448	.472	.506	.531	.384	.416	.395	.374	.406	.395	.384
34.0	28.1	48.4	1.9	.3	.0319	.437	.504	.482	.452	.473	.506	.523	.383	.415	.394	.372	.405	.394	.383

Table 3B — Inferred Pressurant Distribution, Scaling Run 231; Three 3.279-cm Nozzles

t (s)	$\bar{T}$ (°C)	$\bar{T}_e$ (°C)	$\bar{T}_p$ (°C)	β	β/θ	$\bar{X}$	Pressurant Fractions (X) at Locations l: l = 1	2	3	4	5	6	7	8	9	10	11	12	13
COMMENCE VALVE OPENING																			
0.0	13.5	13.5	38.7	1.7	0.0000	0.000	0.000	0.000	0.000	0.000	0.000	0.000	0.000	0.000	0.000	0.000	0.000	0.000	
1.0	18.3	18.5	13.4	-.6	-.0255	.043	-.494	-.299	-.025	-.201	-.338	-.299	.385	.190	.190	.385	.190	.483	.385
VALVE FULLY OPEN																			
2.0	23.5	25.7	8.9	5.1	.4921	.131	-.000	-.000	-.000	.006	.006	.101	.279	.190	.190	.279	.220	.250	.190
3.0	27.5	32.5	7.5	2.0	.1508	.199	.135	.131	.127	.147	.135	.179	.279	.279	.239	.279	.239	.219	.199
4.0	29.6	37.5	6.3	3.7	.2509	.253	.218	.202	.205	.221	.212	.228	.288	.288	.304	.288	.272	.288	.272
5.0	31.1	41.9	5.4	3.5	.2116	.296	.268	.268	.276	.271	.271	.306	.312	.284	.312	.339	.339	.325	.284
6.0	31.9	45.8	4.1	3.8	.2003	.333	.307	.324	.317	.331	.331	.353	.343	.343	.343	.343	.331	.343	.319
7.0	32.0	48.9	2.6	5.0	.2451	.365	.346	.355	.344	.350	.357	.389	.376	.376	.376	.376	.376	.368	.385
8.0	32.4	51.5	2.7	3.2	.1323	.390	.389	.389	.369	.375	.387	.422	.389	.389	.389	.399	.399	.399	.379
9.0	32.2	53.1	2.7	4.6	.1702	.414	.412	.402	.402	.404	.410	.436	.388	.428	.428	.428	.428	.416	.388
COMMENCE VALVE CLOSURE																			
10.0	32.1	54.6	2.7	4.1	.1397	.433	.437	.429	.423	.425	.423	.439	.425	.435	.445	.445	.454	.435	.416
11.0	31.7	55.8	2.4	3.1	.1366	.450	.443	.441	.432	.447	.438	.481	.436	.454	.454	.454	.436	.464	.454
VALVE FULLY CLOSED																			
12.0	31.0	56.9	.9	1.1	.0470	.461	.480	.460	.449	.455	.462	.480	.453	.462	.462	.462	.462	.462	.453
13.0	31.9	58.0	.6	-2.9	-.1285	.461	.475	.468	.463	.462	.468	.491	.462	.462	.462	.444	.444	.453	.444
14.0	31.6	58.1	.7	.9	.0421	.461	.464	.474	.464	.458	.472	.490	.455	.455	.455	.455	.455	.455	.446
15.0	31.3	57.5	.8	1.0	.0428	.461	.466	.473	.461	.463	.479	.500	.465	.465	.447	.447	.447	.438	.447
16.0	31.2	57.2	.8	.5	.0217	.461	.466	.466	.461	.466	.472	.500	.470	.461	.461	.443	.443	.443	.443
17.0	30.9	56.6	.9	1.0	.0440	.461	.467	.463	.456	.465	.468	.492	.459	.459	.459	.441	.459	.450	.459
18.0	30.7	56.2	.9	.5	.0223	.461	.473	.464	.455	.455	.466	.487	.471	.453	.471	.453	.453	.444	.453
19.0	30.6	55.9	1.0	.5	.0225	.461	.472	.463	.448	.452	.461	.479	.464	.464	.464	.453	.446	.464	.464
20.0	30.3	55.3	1.1	1.0	.0456	.461	.474	.465	.448	.454	.459	.474	.459	.459	.459	.459	.459	.468	.459
21.0	30.1	54.9	1.1	.5	.0231	.461	.477	.469	.456	.460	.465	.478	.456	.456	.456	.456	.456	.456	.456
22.0	29.9	54.6	1.1	.5	.0233	.461	.478	.468	.457	.467	.467	.483	.455	.455	.455	.455	.455	.446	.455
23.0	29.8	54.3	1.2	.5	.0235	.461	.473	.468	.460	.470	.466	.485	.453	.453	.453	.453	.453	.462	.453
24.0	29.6	54.0	1.2	.5	.0237	.461	.471	.467	.455	.469	.465	.484	.465	.465	.446	.446	.465	.455	.446
25.0	29.6	54.0	1.2	0.0	0.0000	.461	.469	.463	.456	.465	.469	.488	.456	.456	.456	.456	.456	.456	.456
26.0	29.5	53.7	1.3	.5	.0240	.461	.462	.460	.458	.464	.469	.490	.452	.452	.471	.452	.452	.462	.452
27.0	29.3	53.3	1.3	.5	.0242	.461	.472	.469	.463	.471	.476	.490	.455	.455	.455	.455	.446	.446	.446
28.0	29.2	53.0	1.4	.5	.0244	.461	.478	.476	.468	.474	.480	.493	.457	.457	.457	.437	.437	.447	.437
29.0	29.0	52.7	1.4	.6	.0247	.461	.479	.476	.466	.472	.483	.489	.456	.456	.456	.446	.436	.446	.436
30.0	29.0	52.6	1.5	0.0	0.0000	.461	.481	.477	.461	.469	.479	.493	.455	.455	.455	.455	.436	.446	.436
31.0	28.9	51.3	2.7	.6	.0249	.461	.483	.474	.462	.468	.474	.491	.454	.454	.454	.454	.454	.444	.433
32.0	28.7	50.1	3.8	.6	.0252	.461	.479	.475	.464	.469	.473	.494	.453	.453	.453	.453	.453	.443	.432
33.0	28.7	49.5	4.5	0.0	0.0000	.461	.478	.472	.461	.465	.472	.492	.450	.450	.450	.450	.450	.461	.450
34.0	28.6	48.5	5.3	.6	.0254	.461	.480	.473	.462	.467	.473	.494	.448	.448	.448	.448	.448	.460	.448

Table 4B — Inferred Pressurant Distribution, Scaling Run 232; Three 3.279-cm Nozzles

t (s)	$\bar{T}$ (°C)	$\bar{T}_a$ (°C)	$\bar{T}_p$ (°C)	β	β/θ	$\bar{X}$	Pressurant Fractions (X) at Locations l: l = 1	2	3	4	5	6	7	8	9	10	11	12	13
CONMENCE VALVE OPENING																			
0.0	8.7	8.7	21.1	1.5	0.0000	0.000	0.000	0.000	0.000	0.000	0.000	0.000	0.000	0.000	0.000	0.000	0.000	0.000	
1.0	14.1	15.1	-1.2	10.1	.6784	.065	-.049	.007	.099	.062	-.036	-.030	.148	.086	.056	.117	.086	.179	.117
VALVE FULLY OPEN																			
2.0	19.7	24.1	-5.3	1.8	.1649	.148	.093	.104	.121	.114	.097	.124	.182	.182	.182	.216	.182	.182	.148
3.0	22.8	29.7	-6.0	-.8	-.0398	.192	.148	.139	.142	.167	.153	.181	.223	.195	.195	.251	.223	.251	.223
4.0	24.4	34.3	-5.3	4.6	.3423	.249	.217	.212	.212	.222	.222	.243	.280	.260	.260	.293	.260	.280	.255
5.0	26.1	39.1	-4.7	2.7	.1707	.295	.282	.280	.259	.275	.273	.289	.305	.305	.305	.326	.305	.328	.305
6.0	26.8	42.1	-4.1	4.0	.2190	.333	.329	.316	.308	.319	.325	.338	.323	.344	.344	.344	.355	.355	.323
7.0	27.3	45.1	-3.7	3.2	.1548	.364	.375	.363	.349	.359	.355	.377	.357	.357	.357	.377	.377	.377	.357
8.0	27.1	46.8	-3.4	5.0	.2204	.392	.386	.386	.364	.376	.374	.406	.380	.390	.410	.410	.410	.420	.380
9.0	27.6	49.3	-3.3	2.3	.0865	.414	.409	.403	.394	.400	.401	.420	.392	.411	.411	.430	.430	.468	.411
CONMENCE VALVE CLOSURE																			
10.0	27.4	50.9	-3.2	3.9	.1344	.434	.435	.426	.404	.411	.424	.465	.437	.456	.437	.437	.437	.447	.419
11.0	26.8	51.9	-3.6	2.1	.1464	.452	.446	.441	.421	.441	.455	.473	.453	.472	.472	.453	.453	.453	.435
VALVE FULLY CLOSED																			
12.0	26.1	52.2	-4.7	.8	.0347	.459	.462	.444	.427	.441	.457	.478	.448	.465	.483	.483	.465	.465	.448
13.0	26.8	53.8	-5.0	-1.5	-.1068	.459	.461	.461	.442	.459	.467	.481	.455	.455	.455	.464	.455	.455	.455
14.0	26.7	53.5	-4.9	.3	.0210	.459	.467	.463	.453	.467	.479	.486	.448	.465	.465	.448	.448	.448	.431
15.0	26.4	52.9	-4.8	.6	.0425	.459	.465	.462	.455	.457	.469	.478	.445	.453	.453	.471	.462	.453	.445
16.0	26.2	52.5	-4.8	.3	.0215	.459	.468	.456	.451	.458	.472	.486	.449	.449	.449	.466	.449	.466	.449
17.0	25.9	51.9	-4.7	.6	.0436	.459	.480	.473	.454	.468	.480	.487	.445	.445	.445	.445	.445	.445	.454
18.0	25.8	51.6	-4.6	.3	.0221	.459	.473	.473	.462	.464	.471	.485	.441	.441	.441	.441	.459	.459	.459
19.0	25.5	51.0	-4.6	.6	.0448	.459	.467	.471	.460	.464	.473	.485	.449	.449	.449	.458	.440	.458	.440
20.0	25.3	50.6	-4.5	.3	.0227	.459	.463	.459	.455	.461	.468	.485	.454	.454	.454	.454	.454	.454	.454
21.0	25.2	50.3	-4.5	.3	.0229	.459	.470	.463	.450	.461	.476	.490	.467	.448	.448	.448	.448	.448	.448
22.0	25.0	50.0	-4.4	.3	.0231	.459	.476	.469	.456	.462	.476	.493	.445	.445	.445	.445	.454	.454	.445
23.0	24.9	49.7	-4.4	.3	.0234	.459	.468	.462	.455	.462	.472	.488	.457	.457	.457	.457	.438	.457	.438
24.0	24.7	49.4	-4.3	.3	.0236	.459	.470	.464	.461	.468	.479	.494	.461	.442	.442	.442	.442	.461	.442
25.0	24.6	49.0	-4.3	.3	.0238	.459	.470	.462	.457	.470	.481	.492	.445	.445	.445	.445	.445	.464	.445
26.0	24.4	48.7	-4.2	.3	.0240	.459	.468	.460	.449	.464	.479	.488	.453	.453	.453	.453	.443	.462	.443
27.0	24.3	48.4	-4.2	.4	.0243	.459	.465	.461	.446	.457	.474	.488	.459	.459	.459	.459	.440	.459	.440
28.0	24.3	48.4	-4.2	0.0	0.0000	.459	.466	.459	.449	.457	.470	.485	.457	.457	.457	.457	.457	.457	.438
29.0	24.1	48.1	-4.1	.4	.0245	.459	.470	.459	.449	.457	.468	.486	.457	.457	.457	.457	.457	.457	.438
30.0	24.0	47.7	-4.1	.4	.0247	.459	.470	.459	.451	.462	.470	.491	.455	.455	.455	.455	.455	.455	.435
31.0	23.8	47.4	-4.0	.4	.0250	.459	.471	.457	.457	.469	.477	.492	.452	.452	.452	.452	.452	.452	.432
32.0	23.8	47.4	-4.0	0.0	0.0000	.459	.476	.468	.456	.470	.476	.489	.450	.450	.450	.450	.450	.450	.431
33.0	23.7	47.1	-4.0	.4	.0252	.459	.474	.476	.461	.469	.476	.490	.457	.447	.447	.447	.447	.447	.427
34.0	23.5	46.8	-3.9	.4	.0255	.459	.475	.473	.459	.473	.479	.488	.443	.443	.443	.443	.443	.463	.443

Table 5B — Inferred Pressurant Distribution, Scaling Run 233; Three 3.279-cm Nozzles

t (s)	$\bar{T}$ (°C)	$\bar{T}_c$ (°C)	$\bar{T}_p$ (°C)	β	β/θ	$\bar{X}$	Pressurant Fractions (X) at Locations l: l = 1	2	3	4	5	6	7	8	9	10	11	12	13
COMMENCE VALVE OPENING																			
0.0	12.6	12.6	40.5	1.9	0.0000	0.000	0.000	0.000	0.000	0.000	0.000	0.000	0.000	0.000	0.000	0.000	0.000	0.000	
1.0	16.3	16.5	12.9	36.1	1.6199	.044	-.554	-.307	.130	.048	-.253	-.171	.513	.240	-.034	.240	.240	.240	.240
VALVE FULLY OPEN																			
2.0	22.1	24.3	7.6	3.2	.2931	.120	.020	.038	.074	.086	.068	.158	.248	.158	.158	.218	.128	.158	.158
3.0	25.3	30.0	6.4	4.0	.4002	.198	.122	.117	.134	.151	.139	.228	.270	.228	.228	.270	.228	.228	.228
4.0	28.0	35.7	4.7	2.6	.1764	.250	.215	.212	.206	.212	.209	.257	.277	.277	.261	.293	.277	.277	.277
5.0	29.6	40.5	3.2	3.1	.1841	.293	.270	.265	.270	.268	.278	.313	.292	.292	.319	.319	.319	.319	.292
6.0	30.7	44.9	1.7	2.9	.1485	.329	.332	.323	.307	.323	.328	.355	.318	.330	.330	.341	.330	.330	.330
7.0	31.0	47.7	1.2	4.2	.1993	.360	.353	.350	.340	.361	.363	.381	.346	.346	.346	.368	.368	.389	.368
8.0	31.4	50.3	1.4	3.1	.1273	.385	.392	.384	.375	.381	.390	.408	.381	.381	.381	.392	.392	.381	.371
9.0	31.1	51.5	1.6	5.3	.2037	.409	.404	.406	.388	.404	.412	.432	.398	.418	.418	.418	.418	.398	.398
COMMENCE VALVE CLOSURE																			
10.0	31.0	53.1	1.5	4.0	.1358	.428	.420	.422	.409	.422	.434	.449	.426	.436	.436	.436	.436	.426	.416
11.0	30.7	54.3	1.4	2.9	.1331	.446	.456	.454	.431	.442	.442	.473	.448	.448	.448	.448	.448	.429	.429
VALVE FULLY CLOSED																			
12.0	29.7	54.9	.0	2.4	.1082	.458	.478	.466	.449	.453	.458	.486	.451	.460	.460	.460	.451	.451	.433
13.0	30.8	57.1	-.2	-3.3	-.1524	.458	.470	.461	.447	.457	.468	.494	.454	.454	.454	.454	.454	.454	.437
14.0	30.7	56.8	-.2	.5	.0212	.458	.466	.457	.444	.459	.474	.501	.450	.450	.450	.459	.450	.450	.450
15.0	30.4	56.1	-.1	.9	.0430	.458	.467	.456	.447	.455	.469	.497	.442	.460	.460	.460	.460	.442	.442
16.0	30.0	55.5	-.0	1.0	.0437	.458	.467	.460	.448	.458	.480	.507	.458	.458	.449	.449	.449	.431	.440
17.0	29.9	55.2	-.0	.5	.0222	.458	.474	.469	.462	.464	.480	.503	.462	.462	.444	.444	.444	.425	.425
18.0	29.6	54.5	.1	1.0	.0449	.458	.476	.470	.461	.472	.489	.509	.456	.456	.437	.437	.437	.419	.437
19.0	29.4	54.2	.1	.5	.0228	.458	.484	.478	.463	.467	.476	.502	.454	.454	.436	.454	.436	.417	.436
20.0	29.3	53.9	.2	.5	.0230	.458	.482	.464	.456	.462	.473	.512	.451	.451	.451	.451	.432	.432	.441
21.0	29.1	53.6	.2	.5	.0232	.458	.470	.459	.450	.461	.478	.508	.450	.450	.450	.450	.450	.431	.450
22.0	29.0	53.3	.3	.5	.0234	.458	.473	.463	.446	.456	.475	.503	.446	.446	.446	.437	.456	.446	.465
23.0	28.8	52.9	.3	.5	.0236	.458	.479	.463	.446	.458	.467	.496	.444	.444	.463	.444	.444	.444	.463
24.0	28.7	52.6	.3	.5	.0238	.458	.483	.467	.454	.464	.477	.502	.444	.444	.444	.444	.444	.444	.444
25.0	28.5	52.3	.4	.5	.0241	.458	.480	.464	.453	.462	.472	.505	.449	.458	.458	.439	.439	.439	.439
26.0	28.4	52.0	.4	.5	.0243	.458	.482	.470	.458	.460	.470	.499	.462	.443	.443	.443	.443	.443	.443
27.0	28.4	52.0	.4	0.0	0.0000	.458	.472	.464	.456	.462	.468	.497	.438	.439	.448	.448	.438	.439	.448
28.0	28.2	51.7	.5	.5	.0245	.458	.470	.459	.449	.457	.468	.498	.451	.451	.451	.451	.451	.451	.451
29.0	28.0	51.3	.5	.5	.0248	.458	.473	.463	.452	.457	.467	.497	.450	.450	.450	.450	.450	.450	.450
30.0	27.9	51.0	.6	.5	.0250	.458	.477	.465	.453	.455	.465	.495	.447	.447	.447	.467	.447	.447	.447
31.0	27.9	49.5	2.4	0.0	0.0000	.458	.480	.463	.448	.452	.467	.499	.454	.444	.444	.444	.454	.444	.465
32.0	27.7	48.3	3.5	.6	.0253	.458	.484	.464	.450	.453	.470	.502	.441	.441	.441	.441	.464	.441	.464
33.0	27.6	47.1	4.5	.6	.0256	.458	.487	.471	.452	.462	.473	.511	.443	.443	.443	.443	.443	.443	.443
34.0	27.6	46.6	5.1	0.0	0.0000	.458	.484	.465	.453	.460	.474	.513	.441	.441	.441	.441	.441	.441	.465

Table 6B — Inferred Pressurant Distribution, Scaling Run 234; Three 3.279-cm Nozzles

t (s)	$\bar{T}$ (°C)	$\bar{T}_s$ (°C)	$\bar{T}_p$ (°C)	β	β/α	$\bar{X}$	Pressurant Fractions (X) at Locations l: l = 1	2	3	4	5	6	7	8	9	10	11	12	13
CONMENCE VALVE OPENING																			
0.0	9.0	9.0	21.4	1.5	0.0000	0.000	0.000	0.000	0.000	0.000	0.000	0.000	0.000	0.000	0.000	0.000	0.000	0.000	
1.0	14.3	15.4	-2.2	8.9	.5068	.064	.016	.010	.044	.056	.022	-.041	.136	.050	.079	.136	.079	.136	.107
VALVE FULLY OPEN																			
2.0	19.6	23.9	-5.3	3.0	.2071	.148	.097	.111	.118	.118	.111	.115	.203	.203	.169	.203	.169	.169	.135
3.0	22.6	29.3	-5.6	.2	.0114	.192	.147	.147	.141	.164	.170	.170	.239	.239	.239	.239	.210	.210	.182
4.0	24.7	34.4	-4.8	3.8	.2680	.248	.222	.220	.205	.220	.230	.240	.253	.266	.278	.278	.266	.278	.266
5.0	26.1	38.6	-4.1	3.5	.2227	.294	.286	.277	.261	.275	.284	.296	.296	.319	.296	.319	.296	.319	.296
6.0	27.0	42.2	-3.6	3.3	.1804	.331	.326	.324	.311	.315	.322	.330	.332	.354	.332	.343	.332	.354	.332
7.0	27.7	45.2	-3.2	3.1	.1434	.362	.360	.364	.339	.350	.362	.379	.356	.356	.376	.376	.356	.376	.356
8.0	27.9	47.6	-3.0	3.5	.1496	.389	.409	.405	.375	.391	.405	.405	.387	.387	.387	.387	.387	.377	.348
9.0	28.3	50.1	-3.0	2.5	.0940	.411	.430	.432	.417	.424	.428	.434	.398	.398	.398	.398	.398	.417	.379
CONMENCE VALVE CLOSURE																			
10.0	27.8	51.1	-2.9	5.1	.1794	.432	.454	.448	.428	.434	.434	.447	.419	.428	.428	.428	.428	.437	.400
11.0	27.5	52.6	-3.3	1.6	.1079	.449	.462	.462	.446	.453	.465	.474	.440	.440	.440	.440	.440	.458	.422
VALVE FULLY CLOSED																			
12.0	27.2	54.3	-4.8	-.3	-.0212	.458	.480	.468	.457	.467	.480	.489	.445	.445	.445	.445	.445	.462	.428
13.0	28.4	56.8	-5.1	-2.4	-.1623	.458	.480	.466	.450	.466	.484	.492	.438	.446	.446	.446	.446	.455	.438
14.0	28.4	56.8	-5.1	0.0	0.0000	.458	.485	.474	.461	.474	.479	.482	.438	.438	.438	.454	.438	.454	.438
15.0	28.1	56.2	-5.1	.6	.0396	.458	.482	.478	.469	.492	.491	.476	.445	.437	.437	.437	.437	.445	.429
16.0	28.0	55.8	-5.0	.3	.0200	.458	.479	.467	.462	.469	.477	.476	.451	.434	.451	.451	.451	.451	.434
17.0	27.7	55.2	-4.9	.6	.0406	.458	.484	.474	.461	.474	.474	.474	.444	.444	.444	.444	.444	.444	.444
18.0	27.5	54.9	-4.9	.3	.0206	.458	.487	.480	.467	.479	.482	.482	.442	.442	.442	.442	.442	.442	.425
19.0	27.2	54.3	-4.8	.6	.0416	.458	.481	.475	.468	.481	.490	.486	.430	.439	.439	.439	.439	.447	.439
20.0	27.1	53.9	-4.8	.3	.0211	.458	.470	.463	.463	.469	.479	.482	.435	.435	.452	.452	.452	.452	.452
21.0	27.1	53.9	-4.8	0.0	0.0000	.458	.472	.464	.452	.466	.478	.483	.432	.449	.449	.449	.449	.466	.449
22.0	26.9	53.6	-4.7	.3	.0212	.458	.474	.464	.460	.467	.479	.486	.446	.446	.446	.446	.446	.455	.438
23.0	26.7	53.3	-4.7	.3	.0214	.458	.485	.476	.464	.473	.473	.482	.445	.445	.445	.445	.445	.445	.428
24.0	26.6	53.0	-4.6	.3	.0216	.458	.487	.475	.465	.466	.473	.478	.445	.445	.445	.445	.445	.445	.437
25.0	26.4	52.7	-4.6	.3	.0218	.458	.488	.476	.459	.464	.472	.483	.445	.445	.445	.445	.445	.445	.445
26.0	26.3	52.3	-4.5	.3	.0220	.458	.490	.475	.459	.464	.471	.476	.443	.443	.443	.443	.443	.461	.443
27.0	26.1	52.0	-4.5	.3	.0222	.458	.486	.475	.457	.464	.475	.477	.443	.443	.443	.443	.443	.461	.443
28.0	26.0	51.7	-4.4	.3	.0224	.458	.483	.472	.461	.465	.474	.479	.443	.443	.443	.443	.443	.461	.443
29.0	26.0	51.7	-4.4	0.0	0.0000	.458	.480	.471	.457	.464	.476	.480	.444	.444	.444	.444	.444	.462	.444
30.0	25.8	51.4	-4.4	.3	.0226	.458	.480	.475	.460	.466	.472	.480	.443	.443	.443	.443	.443	.460	.443
31.0	25.7	51.1	-4.3	.3	.0228	.458	.485	.474	.462	.467	.478	.480	.440	.440	.440	.440	.440	.458	.449
32.0	25.7	51.1	-4.3	0.0	0.0000	.458	.482	.475	.460	.466	.480	.482	.439	.439	.439	.439	.439	.457	.457
33.0	25.5	50.7	-4.3	.3	.0230	.458	.485	.474	.460	.469	.482	.482	.438	.438	.438	.438	.438	.456	.456
34.0	25.5	50.7	-4.3	0.0	0.0000	.458	.483	.477	.461	.470	.484	.483	.437	.437	.437	.437	.437	.455	.455

Table 7B — Inferred Pressurant Distribution, Scaling Run 235; Three 3.279-cm Nozzles

t (s)	$\bar{T}$ (°C)	$\bar{T}_s$ (°C)	$\bar{T}_g$ (°C)	β	β/θ	$\bar{X}$	Pressurant Fractions (X) at Locations l: l = 1	2	3	4	5	6	7	8	9	10	11	12	13
COMMENCE VALVE OPENING																			
0.0	10.4	10.4	30.4	1.6	0.0000	0.000	0.000	0.000	0.000	0.000	0.000	0.000	0.000	0.000	0.000	0.000	0.000	0.000	
1.0	15.6	15.0	10.5	5.6	.2011	.049	-.359	-.152	.036	-.077	-.189	-.265	.450	.074	.262	.262	-.020	.356	.262
VALVE FULLY OPEN																			
2.0	21.4	24.0	5.3	2.5	.2369	.135	.049	.065	.065	.071	.049	.076	.189	.243	.243	.189	.082	.189	.243
3.0	24.5	29.5	4.6	5.0	.4037	.203	.136	.128	.132	.144	.144	.168	.204	.264	.204	.244	.204	.224	.264
4.0	26.5	34.3	4.1	4.6	.3264	.257	.204	.211	.204	.204	.201	.234	.326	.293	.293	.293	.260	.293	.326
5.0	28.6	40.1	1.6	2.3	.1316	.299	.287	.287	.279	.287	.289	.302	.315	.302	.302	.302	.289	.328	.315
6.0	29.3	43.1	1.8	4.2	.2216	.335	.319	.312	.331	.339	.346	.370	.331	.331	.355	.331	.331	.331	.331
7.0	29.3	44.5	1.9	5.1	.1663	.356	.356	.351	.341	.349	.349	.370	.353	.353	.377	.353	.353	.377	.353
8.0	29.7	47.0	1.9	3.4	.1416	.383	.367	.381	.367	.369	.381	.401	.389	.401	.412	.389	.367	.389	.367
9.0	29.6	48.8	1.8	4.3	.1705	.407	.401	.403	.396	.392	.405	.415	.432	.432	.432	.411	.390	.390	.390
COMMENCE VALVE CLOSURE																			
10.0	29.5	50.3	1.6	4.3	.1494	.427	.409	.411	.411	.409	.424	.442	.438	.438	.448	.428	.428	.438	.428
11.0	29.3	51.7	1.3	2.3	.1192	.445	.444	.444	.419	.428	.442	.468	.423	.462	.462	.442	.442	.462	.442
VALVE FULLY CLOSED																			
12.0	28.3	52.5	-.3	1.9	.0993	.458	.455	.457	.440	.450	.461	.476	.465	.465	.465	.446	.446	.465	.465
13.0	29.8	55.5	-.6	-4.0	-.2061	.458	.463	.465	.446	.447	.458	.487	.463	.463	.463	.446	.446	.446	.463
14.0	29.7	55.2	-.5	.4	.0199	.458	.463	.465	.455	.456	.467	.481	.462	.462	.462	.444	.444	.444	.453
15.0	29.4	54.6	-.5	.8	.0402	.458	.458	.458	.469	.461	.470	.487	.452	.452	.470	.434	.434	.452	.452
16.0	29.2	54.3	-.5	.4	.0204	.458	.473	.466	.464	.466	.482	.489	.458	.458	.458	.440	.422	.440	.440
17.0	28.9	53.7	-.4	.8	.0412	.458	.479	.481	.473	.475	.481	.484	.451	.451	.451	.433	.423	.433	.442
18.0	28.8	53.4	-.4	.4	.0209	.458	.483	.478	.472	.465	.472	.478	.450	.450	.450	.431	.431	.450	.450
19.0	28.6	53.1	-.4	.4	.0211	.458	.486	.479	.467	.465	.465	.479	.450	.450	.450	.432	.432	.450	.450
20.0	28.3	52.5	-.3	.8	.0426	.458	.484	.482	.471	.465	.463	.476	.448	.448	.448	.429	.429	.448	.467
21.0	28.1	52.2	-.3	.4	.0216	.458	.488	.481	.460	.460	.462	.477	.444	.444	.454	.444	.435	.444	.464
22.0	28.0	51.9	-.3	.4	.0218	.458	.480	.487	.457	.459	.466	.480	.461	.461	.441	.441	.422	.441	.461
23.0	27.8	51.6	-.2	.4	.0220	.458	.468	.470	.456	.464	.470	.481	.458	.458	.458	.439	.439	.439	.458
24.0	27.8	51.6	-.2	0.0	0.0000	.458	.464	.460	.453	.458	.468	.478	.456	.456	.456	.437	.437	.456	.476
25.0	27.7	51.3	-.2	.4	.0222	.458	.459	.461	.449	.455	.463	.474	.451	.470	.470	.451	.432	.451	.470
26.0	27.5	51.0	-.2	.4	.0224	.458	.457	.455	.448	.457	.463	.475	.448	.467	.467	.448	.448	.457	.467
27.0	27.4	50.7	-.2	.4	.0226	.458	.456	.458	.450	.458	.466	.477	.462	.462	.462	.442	.442	.462	.462
28.0	27.2	50.4	-.1	.4	.0228	.458	.455	.457	.447	.455	.463	.473	.459	.469	.479	.439	.439	.459	.459
29.0	27.1	50.0	-.1	.4	.0230	.458	.459	.453	.443	.451	.461	.483	.475	.475	.475	.435	.435	.455	.455
30.0	27.1	50.0	-.1	0.0	0.0000	.458	.458	.458	.450	.458	.474	.490	.464	.464	.464	.434	.434	.454	.454
31.0	26.9	49.7	-.1	.4	.0232	.458	.454	.458	.458	.466	.480	.494	.456	.456	.456	.436	.436	.456	.456
32.0	26.8	49.4	-.0	.5	.0234	.458	.452	.452	.454	.462	.475	.489	.450	.471	.471	.430	.450	.450	.450
33.0	26.8	49.4	-.0	0.0	0.0000	.458	.453	.457	.459	.469	.477	.489	.471	.461	.451	.430	.441	.451	.451
34.0	26.6	49.0	.1	.5	.0236	.458	.457	.461	.463	.469	.479	.496	.451	.451	.451	.430	.451	.451	.451

Table 8B — Inferred Pressurant Distribution, Scaling Run 236; Three 3.279-cm Nozzles

t (s)	$\bar{T}$ (°C)	$\bar{T}_s$ (°C)	$\bar{T}_p$ (°C)	β	β/θ	$\bar{X}$	Pressurant Fractions (X) at Locations l: l = 1	2	3	4	5	6	7	8	9	10	11	12	13
COMMENCE VALVE OPENING																			
0.0	17.4	17.4	23.7	1.6	0.0000	0.000	0.000	0.000	0.000	0.000	0.000	0.000	0.000	0.000	0.000	0.000	0.000	0.000	
1.0	23.1	24.2	6.9	5.1	.3260	.062	-.051	-.016	.030	.013	-.033	-.033	.157	.100	.129	.157	.100	.129	.129
VALVE FULLY OPEN																			
2.0	28.0	32.0	5.9	7.2	.7105	.151	.132	.128	.124	.139	.155	.178	.174	.174	.136	.174	.136	.136	.174
3.0	31.4	38.0	7.2	4.8	.3846	.215	.200	.213	.178	.210	.210	.226	.246	.262	.230	.230	.197	.197	.197
4.0	34.2	43.6	8.3	2.9	.1948	.267	.263	.277	.235	.260	.280	.305	.260	.260	.260	.288	.260	.260	.260
5.0	35.4	46.5	8.9	3.6	.1461	.296	.307	.302	.270	.294	.310	.334	.267	.320	.294	.294	.294	.267	.294
6.0	35.8	49.0	9.4	5.5	.3069	.334	.331	.333	.323	.336	.346	.368	.343	.331	.343	.331	.331	.305	.318
7.0	36.5	52.0	9.6	3.7	.1750	.364	.378	.376	.347	.371	.395	.402	.366	.366	.343	.366	.343	.343	.343
8.0	36.4	53.7	9.6	5.3	.2291	.392	.427	.396	.366	.382	.389	.414	.368	.391	.403	.403	.403	.380	.368
9.0	36.4	55.4	9.6	4.7	.1813	.415	.431	.429	.400	.420	.433	.470	.392	.413	.392	.413	.413	.392	.392
COMMENCE VALVE CLOSURE																			
10.0	36.6	57.4	9.4	3.2	.1079	.434	.464	.456	.418	.441	.462	.477	.427	.427	.427	.416	.416	.406	.406
11.0	36.0	58.0	9.2	2.8	.1087	.451	.483	.468	.439	.460	.470	.479	.442	.442	.442	.442	.442	.442	.421
VALVE FULLY CLOSED																			
12.0	34.9	58.2	7.7	1.4	.0953	.461	.487	.477	.451	.471	.483	.504	.451	.451	.451	.451	.451	.431	.431
13.0	35.7	59.7	7.6	-1.7	-.1096	.461	.499	.481	.451	.468	.479	.495	.447	.437	.447	.456	.447	.447	.437
14.0	35.6	59.4	7.7	.3	.0215	.461	.510	.494	.452	.465	.487	.504	.442	.442	.442	.442	.442	.442	.423
15.0	35.3	58.8	7.7	.7	.0436	.461	.513	.503	.458	.468	.485	.507	.436	.436	.436	.436	.436	.436	.436
16.0	34.9	58.2	7.7	.7	.0444	.461	.506	.496	.458	.474	.488	.504	.452	.452	.432	.432	.432	.432	.432
17.0	34.8	57.9	7.8	.3	.0225	.461	.500	.494	.460	.480	.498	.510	.446	.446	.436	.446	.426	.426	.426
18.0	34.5	57.3	7.8	.7	.0456	.461	.498	.496	.468	.484	.498	.508	.440	.440	.440	.440	.440	.419	.419
19.0	34.3	57.0	7.8	.3	.0231	.461	.502	.498	.473	.485	.498	.512	.435	.435	.435	.435	.435	.424	.424
20.0	34.0	56.3	7.9	.7	.0469	.461	.507	.499	.470	.485	.497	.507	.429	.450	.429	.429	.429	.429	.429
21.0	33.8	56.0	7.9	.4	.0238	.461	.504	.496	.479	.491	.498	.506	.446	.446	.425	.425	.425	.425	.425
22.0	33.7	55.7	7.9	.4	.0240	.461	.505	.494	.465	.480	.500	.513	.448	.448	.427	.427	.427	.427	.427
23.0	33.5	55.4	7.9	.4	.0243	.461	.494	.488	.465	.477	.494	.513	.446	.446	.446	.425	.425	.425	.446
24.0	33.4	55.1	8.0	.4	.0245	.461	.486	.482	.456	.473	.488	.512	.442	.442	.442	.442	.442	.442	.442
25.0	33.2	54.8	8.0	.4	.0247	.461	.488	.475	.456	.475	.490	.509	.436	.458	.436	.436	.458	.436	.436
26.0	33.1	54.5	8.0	.4	.0250	.461	.491	.476	.458	.476	.489	.512	.452	.452	.452	.430	.430	.430	.441
27.0	33.1	54.5	8.0	0.0	0.0000	.461	.491	.485	.467	.482	.493	.506	.450	.450	.450	.429	.429	.429	.429
28.0	32.9	54.1	8.0	.4	.0252	.461	.492	.488	.468	.490	.496	.509	.451	.451	.429	.429	.429	.429	.429
29.0	32.7	53.8	8.1	.4	.0255	.461	.492	.492	.470	.490	.503	.516	.440	.440	.429	.429	.429	.429	.429
30.0	32.7	53.8	8.1	0.0	0.0000	.461	.497	.488	.462	.488	.501	.521	.449	.449	.427	.427	.427	.427	.427
31.0	32.6	53.5	8.1	.4	.0258	.461	.500	.489	.469	.491	.504	.522	.449	.427	.427	.427	.427	.427	.427
32.0	32.4	53.2	8.1	.4	.0260	.461	.499	.492	.470	.492	.501	.519	.450	.428	.428	.428	.428	.428	.428
33.0	32.3	52.9	8.2	.4	.0263	.461	.501	.490	.477	.495	.501	.515	.430	.430	.430	.430	.430	.430	.430
34.0	32.3	52.9	8.2	0.0	0.0000	.461	.502	.493	.473	.493	.502	.509	.431	.431	.431	.431	.431	.431	.431

XXX

Table 9B — Inferred Pressurant Distribution, Scaling Run 237; Three 3.279-cm Nozzles

t (s)	$\bar{T}$ (°C)	$\bar{T}_e$ (°C)	$\bar{T}_p$ (°C)	β	β/θ	$\bar{X}$	Pressurant Fractions (X) at Locations l: l = 1	2	3	4	5	6	7	8	9	10	11	12	13
COMMENCE VALVE OPENING																			
0.0	7.4	7.4	35.8	1.9	0.0000	0.000	0.000	0.000	0.000	0.000	0.000	0.000	0.000	0.000	0.000	0.000	0.000	0.000	
1.0	10.9	11.6	-1.0	36.4	1.9066	.051	-.232	-.046	.742	.065	-.143	-.150	.051	-.061	-.135	-.061	.068	.311	.236
VALVE FULLY OPEN																			
2.0	15.5	18.6	-3.9	11.3	1.0980	.139	-.078	.047	.657	.078	.002	.033	.096	.051	.006	.051	.096	.541	.229
3.0	18.3	23.8	-2.4	7.9	.6480	.207	.023	.176	.684	.126	.084	.077	.126	.107	.088	.107	.241	.603	.241
4.0	20.7	28.4	-1.4	5.3	.3692	.260	.116	.254	.733	.177	.163	.197	.167	.167	.133	.133	.200	.670	.267
5.0	21.8	31.7	-.8	6.0	.3612	.303	.143	.251	.769	.245	.245	.269	.208	.208	.161	.177	.254	.716	.300
6.0	22.6	34.4	-.4	5.6	.3035	.340	.208	.294	.797	.248	.260	.297	.257	.257	.199	.199	.314	.717	.372
7.0	22.7	36.2	-.2	6.2	.2939	.370	.252	.310	.836	.296	.274	.280	.296	.269	.241	.241	.337	.762	.419
8.0	23.1	38.4	-.2	4.5	.1843	.395	.286	.367	.812	.330	.317	.369	.335	.284	.258	.258	.361	.776	.387
9.0	22.8	38.8	-.2	7.8	.2061	.411	.289	.360	.852	.342	.342	.378	.291	.342	.266	.291	.394	.603	.394
COMMENCE VALVE CLOSURE																			
10.0	22.3	39.5	-.3	7.3	.2636	.432	.318	.411	.850	.340	.368	.398	.353	.353	.315	.315	.391	.605	.391
11.0	22.3	41.0	-.5	2.5	.1334	.449	.369	.403	.841	.365	.386	.422	.398	.374	.326	.350	.446	.784	.374
VALVE FULLY CLOSED																			
12.0	21.5	42.0	-2.3	2.1	.1105	.463	.380	.491	.809	.385	.412	.414	.396	.385	.339	.339	.441	.791	.441
13.0	23.3	45.7	-2.7	-5.7	-.3069	.463	.434	.483	.568	.391	.413	.428	.434	.413	.393	.393	.455	.640	.578
14.0	23.3	45.7	-2.7	0.0	0.0000	.463	.471	.467	.512	.430	.457	.477	.432	.432	.422	.422	.453	.545	.504
15.0	23.0	45.1	-2.6	.9	.0487	.463	.489	.466	.512	.445	.479	.500	.447	.447	.426	.426	.447	.468	.468
16.0	22.8	44.8	-2.6	.5	.0247	.463	.495	.474	.514	.459	.490	.505	.444	.444	.423	.423	.444	.455	.455
17.0	22.5	44.2	-2.5	.9	.0501	.463	.492	.468	.509	.462	.498	.511	.440	.440	.419	.419	.440	.462	.462
18.0	22.4	43.9	-2.5	.5	.0254	.463	.499	.465	.506	.461	.493	.506	.439	.461	.417	.417	.439	.461	.461
19.0	22.2	43.6	-2.5	.5	.0257	.463	.501	.468	.505	.459	.488	.501	.451	.451	.429	.429	.451	.451	.440
20.0	22.1	43.2	-2.4	.5	.0260	.463	.511	.469	.504	.460	.491	.500	.447	.447	.425	.425	.447	.447	.447
21.0	21.9	42.9	-2.4	.5	.0262	.463	.505	.470	.499	.457	.485	.499	.446	.446	.424	.424	.446	.479	.446
22.0	21.8	42.6	-2.4	.5	.0265	.463	.496	.461	.496	.454	.483	.494	.461	.461	.439	.439	.439	.461	.439
23.0	21.6	42.3	-2.3	.5	.0268	.463	.492	.459	.497	.459	.483	.497	.454	.454	.432	.432	.454	.466	.443
24.0	21.5	42.0	-2.3	.5	.0271	.463	.493	.454	.504	.464	.491	.493	.448	.448	.425	.425	.448	.471	.448
25.0	21.3	41.7	-2.3	.5	.0274	.463	.492	.461	.513	.470	.488	.495	.447	.447	.424	.424	.447	.470	.447
26.0	21.2	41.4	-2.2	.5	.0277	.463	.495	.462	.504	.462	.485	.497	.449	.449	.426	.426	.449	.472	.449
27.0	21.2	41.4	-2.2	0.0	0.0000	.463	.490	.460	.501	.460	.488	.499	.446	.446	.446	.423	.446	.469	.446
28.0	21.0	41.0	-2.2	.5	.0280	.463	.496	.461	.505	.463	.491	.502	.447	.447	.424	.424	.447	.470	.447
29.0	20.9	40.7	-2.2	.5	.0283	.463	.496	.471	.505	.471	.489	.501	.445	.445	.422	.422	.445	.468	.445
30.0	20.7	40.4	-2.1	.5	.0287	.463	.496	.467	.519	.479	.496	.498	.442	.442	.418	.418	.442	.465	.442
31.0	20.7	40.4	-2.1	0.0	0.0000	.463	.492	.463	.513	.473	.499	.499	.437	.437	.437	.437	.437	.461	.437
32.0	20.5	40.1	-2.1	.5	.0290	.463	.490	.462	.509	.467	.495	.502	.436	.436	.436	.436	.448	.459	.448
33.0	20.4	39.8	-2.0	.5	.0293	.463	.492	.457	.502	.461	.492	.502	.435	.435	.435	.435	.459	.459	.459
34.0	20.4	39.8	-2.0	0.0	0.0000	.463	.498	.462	.505	.465	.489	.498	.434	.434	.434	.434	.457	.457	.457

Table 10B — Inferred Pressurant Distribution, Scaling Run 238; Three 3.279-cm Nozzles

t (s)	$\bar{T}$ (°C)	$\bar{T}_a$ (°C)	$\bar{T}_p$ (°C)	β	β/θ	$\bar{X}$	Pressurant Fractions (X) at Locations l: l = 1	2	3	4	5	6	7	8	9	10	11	12	13
COMMENCE VALVE OPENING																			
0.0	7.4	7.4	35.8	1.9	0.0000	0.000	0.000	0.000	0.000	0.000	0.000	0.000	0.000	0.000	0.000	0.000	0.000	0.000	
1.0	10.9	11.6	-1.0	36.4	1.9066	.051	-.232	-.046	.742	.065	-.143	-.150	.051	-.061	-.135	-.061	.088	.311	.236
VALVE FULLY OPEN																			
2.0	15.5	18.6	-3.9	11.3	1.0988	.139	-.078	.047	.657	.078	.002	.033	.096	.051	.006	.051	.096	.541	.229
3.0	18.3	23.8	-2.4	7.9	.6480	.207	.023	.176	.684	.126	.084	.077	.126	.107	.088	.107	.241	.603	.241
4.0	20.7	28.4	-1.4	5.3	.3692	.260	.116	.254	.733	.177	.163	.197	.167	.167	.133	.133	.200	.670	.267
5.0	21.8	31.7	-.8	6.0	.3612	.303	.143	.251	.769	.245	.245	.269	.208	.208	.161	.177	.254	.716	.300
6.0	22.6	34.4	-.4	5.6	.3035	.340	.208	.294	.797	.248	.260	.297	.257	.257	.199	.199	.314	.717	.372
7.0	22.7	36.2	-.2	6.2	.2939	.370	.252	.310	.836	.296	.274	.280	.296	.269	.241	.241	.337	.762	.419
8.0	23.1	38.4	-.2	4.5	.1843	.395	.286	.367	.812	.330	.317	.369	.335	.284	.258	.258	.361	.776	.387
9.0	22.8	38.8	-.2	7.8	.2061	.411	.289	.360	.852	.342	.342	.378	.291	.342	.266	.291	.394	.603	.394
COMMENCE VALVE CLOSURE																			
10.0	22.3	39.5	-.3	7.3	.2636	.432	.318	.411	.850	.348	.368	.398	.353	.353	.315	.315	.391	.605	.391
11.0	22.3	41.0	-.5	2.5	.1354	.449	.369	.403	.841	.365	.386	.422	.398	.374	.326	.350	.446	.784	.374
VALVE FULLY CLOSED																			
12.0	21.5	42.0	-2.3	2.1	.1105	.463	.380	.491	.809	.385	.412	.414	.396	.385	.339	.339	.441	.791	.441
13.0	23.3	45.7	-2.7	-5.7	-.3069	.463	.434	.483	.568	.391	.413	.428	.434	.413	.393	.393	.455	.640	.578
14.0	23.3	45.7	-2.7	0.0	0.0000	.463	.471	.467	.512	.430	.457	.477	.432	.432	.422	.422	.453	.545	.504
15.0	23.0	45.1	-2.6	.9	.0487	.463	.489	.466	.512	.445	.479	.500	.447	.447	.426	.426	.447	.468	.468
16.0	22.8	44.8	-2.6	.5	.0247	.463	.495	.474	.514	.459	.490	.505	.444	.444	.423	.423	.444	.455	.455
17.0	22.5	44.2	-2.5	.9	.0501	.463	.492	.468	.509	.462	.498	.511	.440	.440	.419	.419	.440	.462	.462
18.0	22.4	43.9	-2.5	.5	.0254	.463	.499	.465	.506	.461	.493	.506	.439	.461	.417	.417	.439	.461	.461
19.0	22.2	43.6	-2.5	.5	.0257	.463	.501	.468	.505	.459	.488	.501	.451	.451	.429	.429	.451	.451	.440
20.0	22.1	43.2	-2.4	.5	.0260	.463	.511	.469	.504	.460	.491	.500	.447	.447	.425	.425	.447	.447	.447
21.0	21.9	42.9	-2.4	.5	.0262	.463	.505	.470	.499	.457	.485	.499	.446	.446	.424	.424	.446	.479	.446
22.0	21.8	42.6	-2.4	.5	.0265	.463	.496	.461	.496	.454	.483	.494	.461	.461	.439	.439	.439	.461	.439
23.0	21.6	42.3	-2.3	.5	.0268	.463	.492	.459	.497	.459	.483	.497	.454	.454	.432	.432	.454	.466	.443
24.0	21.5	42.0	-2.3	.5	.0271	.463	.493	.464	.504	.464	.491	.493	.448	.448	.425	.425	.448	.471	.448
25.0	21.3	41.7	-2.3	.5	.0274	.463	.492	.461	.513	.470	.488	.495	.447	.447	.424	.424	.447	.470	.447
26.0	21.2	41.4	-2.2	.5	.0277	.463	.495	.462	.504	.462	.485	.497	.449	.449	.426	.426	.449	.472	.449
27.0	21.2	41.4	-2.2	0.0	0.0000	.463	.490	.460	.501	.460	.488	.499	.446	.446	.446	.423	.446	.469	.446
28.0	21.0	41.0	-2.2	.5	.0280	.463	.496	.461	.505	.463	.491	.502	.447	.447	.424	.424	.447	.470	.447
29.0	20.9	40.7	-2.2	.5	.0283	.463	.496	.471	.505	.471	.489	.501	.445	.445	.422	.422	.445	.468	.445
30.0	20.7	40.4	-2.1	.5	.0287	.463	.496	.467	.519	.479	.496	.498	.442	.442	.418	.418	.442	.465	.442
31.0	20.7	40.4	-2.1	0.0	0.0000	.463	.492	.463	.513	.473	.499	.499	.437	.437	.437	.437	.437	.461	.437
32.0	20.5	40.1	-2.1	.5	.0290	.463	.490	.462	.509	.467	.495	.502	.436	.436	.436	.436	.448	.459	.448
33.0	20.4	39.8	-2.0	.5	.0293	.463	.492	.457	.502	.461	.492	.502	.435	.435	.435	.435	.459	.459	.459
34.0	20.4	39.8	-2.0	0.0	0.0000	.463	.498	.462	.505	.465	.489	.498	.434	.434	.434	.434	.457	.457	.457

Table 11B — Inferred Pressurant Distribution, Scaling Run 239; Three 3.279-cm Nozzles

t (s)	T (°C)	$\bar{T}_a$ (°C)	$\bar{T}_p$ (°C)	β	β/θ	$\bar{X}$	Pressurant Fractions (X) at Locations l: l = 1	2	3	4	5	6	7	8	9	10	11	12	13
COMMENCE VALVE OPENING																			
0.0	2.1	2.1	37.2	1.9	0.0000	0.000	0.000	0.000	0.000	0.000	0.000	0.000	0.000	0.000	0.000	0.000	0.000	0.000	
1.0	4.5	5.2	-9.3	78.8	4.0103	.050	-.284	-.077	.500	-.064	-.139	-.119	.005	-.098	-.064	.005	.005	.865	.108
VALVE FULLY OPEN																			
2.0	9.1	12.5	-12.1	9.9	.9388	.136	-.064	.054	.425	.066	.017	.034	.095	.034	.034	.054	.095	.747	.176
3.0	11.8	17.4	-9.8	8.8	.7338	.205	.003	.073	.493	.176	.114	.165	.121	.103	.084	.121	.158	.839	.213
4.0	13.7	21.3	-8.1	7.2	.4989	.258	.091	.247	.567	.217	.183	.224	.142	.142	.125	.142	.159	.891	.227
5.0	14.7	24.2	-7.3	6.9	.4208	.302	.156	.267	.657	.251	.242	.277	.194	.210	.163	.163	.194	.940	.210
6.0	15.4	26.9	-7.1	5.9	.3134	.338	.199	.278	.694	.258	.275	.311	.228	.228	.199	.228	.258	.920	.317
7.0	15.6	28.8	-7.0	6.2	.2899	.368	.235	.280	.704	.291	.263	.294	.299	.313	.271	.243	.355	.927	.313
8.0	16.0	31.0	-7.1	4.6	.1897	.394	.281	.325	.734	.286	.310	.383	.312	.299	.286	.273	.325	.955	.351
9.0	16.1	32.7	-7.3	5.0	.1874	.416	.325	.357	.747	.352	.365	.397	.340	.327	.315	.315	.340	.927	.302
10.0	16.0	33.7	-7.5	4.9	.1152	.429	.335	.367	.748	.364	.359	.384	.354	.342	.330	.330	.379	.950	.342
COMMENCE VALVE CLOSURE																			
11.0	15.9	34.9	-7.7	5.3	.1654	.447	.349	.380	.744	.375	.408	.436	.347	.358	.347	.347	.394	.946	.382
12.0	15.4	36.4	-9.2	1.3	.0696	.461	.396	.455	.723	.390	.425	.464	.357	.368	.357	.357	.401	.916	.390
VALVE FULLY CLOSED																			
13.0	15.2	36.9	-9.9	-.3	-.0165	.464	.461	.474	.542	.408	.442	.459	.380	.402	.391	.391	.423	.775	.487
14.0	15.2	36.9	-9.9	0.0	0.0000	.464	.470	.459	.457	.433	.472	.495	.423	.433	.423	.423	.444	.647	.455
15.0	15.0	36.6	-9.9	.5	.0285	.464	.480	.450	.422	.437	.480	.497	.441	.452	.441	.441	.430	.635	.430
16.0	14.7	36.0	-9.8	1.1	.0580	.464	.487	.457	.420	.441	.476	.498	.420	.452	.441	.441	.441	.627	.431
17.0	14.6	35.6	-9.7	.6	.0295	.464	.491	.460	.416	.445	.485	.505	.421	.454	.443	.443	.443	.608	.421
18.0	14.3	35.0	-9.6	1.2	.0601	.464	.500	.464	.408	.444	.484	.505	.437	.448	.437	.437	.437	.628	.404
19.0	14.1	34.6	-9.5	.6	.0306	.464	.507	.471	.412	.455	.498	.514	.430	.441	.430	.430	.430	.622	.396
20.0	14.0	34.3	-9.4	.6	.0310	.464	.505	.480	.418	.459	.505	.528	.432	.443	.432	.421	.409	.603	.398
21.0	13.9	34.0	-9.4	.6	.0314	.464	.493	.467	.412	.463	.509	.527	.430	.442	.430	.430	.430	.603	.396
22.0	13.7	33.6	-9.3	.6	.0318	.464	.492	.464	.401	.453	.497	.518	.450	.450	.439	.439	.439	.578	.415
23.0	13.6	33.3	-9.3	.6	.0322	.464	.494	.458	.400	.451	.494	.512	.449	.461	.426	.449	.449	.578	.414
24.0	13.4	33.0	-9.2	.6	.0326	.464	.500	.455	.393	.446	.488	.507	.443	.455	.443	.443	.443	.597	.419
25.0	13.4	33.0	-9.2	0.0	0.0000	.464	.496	.460	.394	.443	.488	.512	.441	.453	.441	.441	.441	.595	.429
26.0	13.3	32.6	-9.1	.6	.0330	.464	.499	.461	.398	.446	.489	.511	.439	.451	.439	.439	.439	.595	.427
27.0	13.1	32.3	-9.0	.6	.0335	.464	.497	.461	.396	.452	.495	.517	.437	.449	.437	.437	.437	.594	.425
28.0	13.0	32.0	-9.0	.6	.0339	.464	.504	.465	.397	.450	.497	.514	.436	.448	.436	.436	.436	.594	.423
29.0	12.8	31.6	-8.9	.7	.0344	.464	.506	.469	.395	.452	.496	.514	.435	.447	.435	.435	.435	.595	.422
30.0	12.8	31.6	-8.9	0.0	0.0000	.464	.506	.469	.397	.449	.496	.516	.434	.447	.434	.434	.434	.595	.422
31.0	12.7	31.3	-8.8	.7	.0349	.464	.509	.469	.409	.457	.494	.514	.432	.444	.432	.432	.432	.594	.419
32.0	12.7	31.3	-8.8	0.0	0.0000	.464	.505	.468	.416	.458	.490	.513	.428	.466	.428	.428	.428	.590	.416
33.0	12.5	31.0	-8.8	.7	.0354	.464	.501	.471	.418	.460	.493	.513	.438	.463	.425	.425	.425	.589	.413
34.0	12.4	30.6	-8.7	.7	.0359	.464	.498	.465	.421	.462	.503	.513	.444	.457	.419	.419	.419	.610	.406

Table 12B — Inferred Pressurant Distribution, Scaling Run 240; Three 3.279-cm Nozzles

t (s)	$\bar{T}$ (°C)	$\bar{T}_s$ (°C)	$\bar{T}_p$ (°C)	β	β/θ	$\bar{X}$	Pressurant Fractions (X) at Locations I: I = 1	2	3	4	5	6	7	8	9	10	11	12	13
CONMENCE VALVE OPENING																			
0.0	2.6	2.6	43.4	1.9	0.0000	0.000	0.000	0.000	0.000	0.000	0.000	0.000	0.000	0.000	0.000	0.000	0.000	0.000	
1.0	5.0	5.4	-4.7	75.6	3.2002	.041	-.436	-.077	.829	-.008	-.336	-.356	-.018	-.167	-.167	-.067	.032	1.127	.182
VALVE FULLY OPEN																			
2.0	9.6	12.3	-8.4	13.3	1.2869	.130	-.141	-.015	.689	.092	-.141	-.150	.034	.010	.010	.058	.058	.882	.301
3.0	12.7	17.6	-7.0	8.2	.6[illegible]	.199	-.069	.098	.668	.139	.009	.049	.082	.102	.062	.062	.102	.956	.326
4.0	14.3	21.0	-5.4	8.7	.6146	.254	-.002	.221	.735	.153	.066	.093	.131	.131	.112	.131	.206	.981	.338
5.0	15.9	24.6	-4.9	5.5	.3262	.296	.085	.218	.771	.201	.150	.167	.170	.187	.153	.187	.255	.935	.374
6.0	16.2	26.6	-4.6	7.5	.4107	.334	.124	.262	.799	.255	.185	.201	.210	.210	.210	.210	.258	.979	.434
7.0	16.5	28.6	-4.6	6.3	.2968	.364	.183	.318	.827	.261	.228	.267	.273	.228	.228	.258	.318	1.011	.333
8.0	16.9	30.6	-4.6	5.3	.2210	.390	.223	.365	.841	.303	.269	.280	.286	.286	.271	.271	.356	.980	.342
9.0	16.6	31.5	-4.7	7.5	.2882	.413	.239	.397	.847	.295	.275	.328	.303	.317	.317	.317	.372	1.007	.358
10.0	17.1	33.3	-4.8	1.4	.0297	.425	.268	.355	.833	.336	.315	.339	.334	.347	.347	.347	.373	1.004	.334
CONMENCE VALVE CLOSURE																			
11.0	16.9	34.2	-5.0	6.1	.1901	.443	.310	.379	.854	.356	.341	.338	.349	.361	.336	.336	.412	.974	.412
12.0	16.3	35.3	-6.1	3.5	.1500	.459	.331	.418	.820	.346	.336	.370	.380	.367	.367	.367	.416	.972	.476
VALVE FULLY CLOSED																			
13.0	17.1	38.3	-7.4	-4.8	-.2083	.464	.389	.434	.690	.393	.393	.399	.389	.410	.410	.410	.443	.793	.476
14.0	17.4	39.0	-7.5	-1.2	-.0506	.464	.416	.440	.513	.412	.427	.453	.446	.457	.435	.457	.457	.651	.468
15.0	17.3	38.7	-7.4	.6	.0252	.464	.434	.443	.491	.426	.441	.454	.434	.456	.456	.456	.456	.629	.456
16.0	17.0	38.0	-7.4	1.2	.0512	.464	.443	.449	.489	.438	.443	.458	.443	.454	.454	.454	.432	.630	.443
17.0	16.7	37.4	-7.3	1.2	.0522	.464	.440	.453	.491	.444	.451	.462	.438	.449	.449	.449	.449	.617	.438
18.0	16.5	37.1	-7.3	.6	.0265	.464	.446	.457	.484	.452	.452	.461	.434	.446	.446	.446	.446	.626	.434
19.0	16.4	36.8	-7.2	.6	.0268	.464	.445	.457	.482	.454	.464	.461	.429	.441	.441	.441	.441	.645	.429
20.0	16.2	36.5	-7.2	.6	.0271	.464	.452	.459	.482	.464	.466	.464	.429	.441	.441	.441	.441	.624	.429
21.0	16.1	36.2	-7.2	.6	.0274	.464	.452	.459	.479	.459	.461	.465	.447	.459	.435	.435	.435	.620	.424
22.0	15.9	35.9	-7.1	.6	.0277	.464	.452	.457	.482	.464	.461	.471	.440	.452	.452	.440	.429	.615	.417
23.0	15.8	35.6	-7.1	.6	.0280	.464	.454	.461	.485	.464	.461	.473	.440	.452	.452	.428	.428	.616	.417
24.0	15.6	35.3	-7.0	.7	.0283	.464	.455	.459	.485	.459	.462	.474	.440	.452	.452	.429	.429	.618	.417
25.0	15.5	34.9	-7.0	.7	.0287	.464	.457	.464	.483	.457	.459	.471	.437	.449	.449	.426	.426	.616	.437
26.0	15.3	34.6	-7.0	.7	.0290	.464	.462	.467	.488	.455	.457	.469	.431	.443	.443	.443	.431	.611	.431
27.0	15.3	34.6	-7.0	0.0	0.0000	.464	.470	.473	.494	.453	.465	.475	.424	.437	.437	.437	.437	.605	.424
28.0	15.2	34.3	-6.9	.7	.0293	.464	.465	.479	.499	.453	.455	.472	.424	.436	.436	.436	.436	.618	.424
29.0	15.0	34.0	-6.9	.7	.0297	.464	.462	.467	.486	.452	.454	.469	.447	.435	.435	.435	.435	.631	.423
30.0	15.0	34.0	-6.9	0.0	0.0000	.464	.460	.463	.485	.455	.455	.467	.448	.436	.436	.436	.436	.631	.423
31.0	14.9	33.7	-6.8	.7	.0300	.464	.465	.463	.483	.458	.456	.470	.423	.436	.436	.436	.436	.633	.436
32.0	14.7	33.4	-6.8	.7	.0304	.464	.468	.460	.485	.463	.455	.470	.420	.433	.433	.433	.433	.632	.445
33.0	14.7	33.4	-6.8	0.0	0.0000	.464	.463	.458	.481	.458	.458	.466	.428	.453	.428	.428	.428	.640	.441
34.0	14.6	33.1	-6.8	.7	.0308	.464	.458	.461	.479	.453	.453	.461	.436	.448	.423	.423	.423	.674	.436
XXX																			

Table 13B — Inferred Pressurant Distribution, Scaling Run 241; South 3.279-cm Nozzle

t (s)	$\bar{T}$ (°C)	$\bar{T}_e$ (°C)	$\bar{T}_p$ (°C)	β	β/θ	$\bar{X}$	Pressurant Fractions (X) at Locations l: l = 1	2	3	4	5	6	7	8	9	10	11	12	13
COMMENCE VALVE OPENING																			
0.0	16.7	16.7	22.4	.4	0.0000	0.000	0.000	0.000	0.000	0.000	0.000	0.000	0.000	0.000	0.000	0.000	0.000	0.000	
1.0	18.4	18.3	23.1	97.3	1.0892	.019	.472	.325	.073	.178	.283	.514	-.348	-.138	-.138	-.138	-.138	-.348	-.348
VALVE FULLY OPEN																			
2.0	22.2	22.3	20.5	9.1	.3523	.057	-1.380	-1.156	-.989	-.933	-1.268	-1.604	1.472	1.472	.633	.913	.633	1.472	1.472
3.0	25.0	26.0	14.9	2.6	.0937	.091	-.136	-.100	-.082	-.082	-.127	-.145	.392	.303	.124	.213	.213	.303	.303
4.0	27.5	29.6	12.2	.6	.0212	.121	.002	.019	.019	.013	.007	-.004	.225	.254	.197	.197	.168	.254	.225
5.0	29.3	32.5	10.6	2.2	.0692	.148	.135	.117	.085	.076	.094	.090	.176	.176	.222	.176	.176	.222	.176
6.0	31.2	35.6	9.7	-.4	-.0113	.172	.196	.173	.150	.154	.123	.111	.212	.193	.212	.173	.135	.212	.193
7.0	32.4	38.0	9.4	3.1	.0883	.195	.215	.194	.194	.176	.169	.176	.222	.187	.187	.187	.187	.222	.222
8.0	33.3	39.9	9.3	4.4	.1196	.217	.233	.237	.256	.210	.214	.220	.204	.220	.188	.186	.188	.220	.237
9.0	34.4	42.1	9.3	2.0	.0482	.236	.236	.242	.230	.236	.236	.233	.196	.227	.227	.227	.227	.257	.288
10.0	34.4	42.7	9.4	7.4	.1289	.249	.266	.269	.230	.260	.272	.272	.182	.212	.242	.242	.242	.272	.272
11.0	35.0	44.2	9.5	4.2	.0966	.266	.287	.273	.270	.261	.267	.270	.204	.218	.261	.261	.276	.304	.304
12.0	35.7	46.0	9.6	2.4	.0518	.281	.284	.281	.262	.270	.284	.294	.229	.229	.284	.284	.284	.338	.338
13.0	35.2	46.0	9.7	10.0	.2339	.298	.332	.318	.293	.315	.340	.354	.202	.230	.285	.285	.285	.312	.326
14.0	35.7	47.3	9.9	3.3	.0639	.311	.333	.349	.365	.344	.333	.330	.258	.232	.312	.285	.285	.312	.312
15.0	36.6	49.2	10.0	-.2	-.0029	.323	.400	.354	.349	.341	.318	.300	.282	.321	.308	.308	.282	.333	.308
16.0	36.7	50.0	10.1	5.2	.0947	.336	.396	.396	.393	.373	.340	.318	.285	.285	.310	.310	.285	.335	.335
17.0	36.8	50.9	10.2	4.8	.0859	.347	.375	.372	.370	.365	.360	.358	.276	.289	.326	.350	.326	.363	.387
18.0	36.8	51.6	10.3	5.5	.0948	.359	.400	.393	.366	.381	.383	.376	.265	.289	.337	.313	.337	.410	.410
19.0	36.3	51.3	10.4	10.6	.1296	.366	.411	.404	.418	.413	.401	.387	.259	.259	.357	.333	.333	.382	.406
20.0	36.6	52.3	10.4	2.8	.0420	.376	.438	.426	.426	.424	.417	.434	.278	.290	.350	.314	.326	.374	.386
21.0	36.3	52.4	10.5	7.9	.1315	.386	.426	.438	.436	.448	.443	.407	.281	.328	.328	.328	.352	.400	.400
22.0	35.8	52.2	10.6	9.5	.1488	.396	.420	.420	.432	.441	.446	.437	.302	.302	.374	.374	.374	.422	.398
23.0	36.5	53.9	10.7	-3.2	-.0364	.402	.427	.429	.436	.427	.422	.411	.307	.376	.399	.376	.376	.422	.422
24.0	36.4	54.3	10.8	6.0	.0812	.410	.435	.432	.430	.416	.423	.412	.313	.347	.405	.416	.428	.439	.439
25.0	36.5	55.0	10.8	3.5	.0445	.418	.411	.411	.422	.402	.406	.406	.325	.347	.438	.438	.461	.483	.483
26.0	36.2	54.8	10.8	9.8	.0909	.423	.428	.430	.428	.428	.428	.451	.321	.344	.412	.435	.435	.481	.481
27.0	35.5	54.2	10.9	10.9	.1570	.431	.444	.456	.456	.451	.460	.463	.313	.347	.428	.428	.428	.474	.463
COMMENCE VALVE CLOSURE																			
28.0	35.1	54.0	10.9	9.3	.1152	.438	.460	.463	.467	.463	.467	.472	.356	.356	.425	.425	.425	.449	.472
29.0	35.0	54.3	10.9	3.4	.0664	.445	.456	.471	.494	.464	.473	.467	.361	.361	.441	.441	.430	.441	.441
VALVE FULLY CLOSED																			
30.0	34.8	54.5	10.8	3.5	.0690	.451	.512	.503	.487	.494	.505	.519	.386	.386	.409	.409	.409	.432	.409
31.0	36.9	58.2	10.9	-13.6	-.2668	.451	.504	.494	.483	.479	.473	.490	.382	.382	.413	.424	.424	.456	.456
32.0	38.0	60.1	11.0	-6.8	-.1328	.451	.489	.493	.499	.477	.467	.450	.391	.391	.432	.432	.432	.452	.452
33.0	38.5	61.0	11.0	-2.8	-.0548	.451	.489	.489	.481	.465	.461	.455	.391	.391	.431	.431	.451	.451	.471
34.0	38.8	61.5	11.1	-1.8	-.0359	.451	.490	.494	.480	.470	.460	.452	.381	.401	.430	.440	.440	.460	.460
35.0	38.9	61.8	11.1	-.9	-.0177	.451	.491	.483	.481	.457	.457	.463	.390	.390	.430	.430	.449	.469	.469
36.0	39.1	62.1	11.1	-.9	-.0176	.451	.481	.478	.468	.462	.464	.466	.385	.385	.434	.444	.444	.483	.464
37.0	39.1	62.1	11.1	0.0	0.0000	.451	.480	.480	.466	.464	.458	.456	.403	.403	.442	.442	.423	.481	.462
38.0	38.9	61.8	11.1	.9	.0176	.451	.471	.471	.465	.461	.463	.467	.400	.419	.459	.439	.429	.459	.459
39.0	38.9	61.8	11.1	0.0	0.0000	.451	.458	.460	.470	.472	.476	.468	.386	.425	.445	.425	.445	.464	.464
40.0	38.9	61.8	11.1	0.0	0.0000	.451	.456	.462	.471	.469	.481	.479	.381	.420	.440	.440	.440	.460	.460
41.0	38.8	61.5	11.1	.9	.0177	.451	.460	.464	.472	.474	.478	.476	.395	.425	.435	.435	.435	.455	.455
42.0	38.6	61.2	11.0	.9	.0179	.451	.457	.464	.476	.468	.470	.470	.405	.425	.445	.425	.445	.464	.445
43.0	38.5	61.0	11.0	.9	.0180	.451	.459	.463	.471	.467	.463	.473	.403	.433	.443	.433	.443	.463	.443
44.0	38.3	60.7	11.0	.9	.0181	.451	.463	.463	.469	.467	.463	.475	.403	.423	.443	.443	.443	.463	.443
45.0	38.3	60.7	11.0	0.0	0.0000	.451	.465	.461	.465	.465	.461	.469	.400	.441	.441	.451	.441	.461	.441
46.0	38.1	60.4	11.0	.9	.0183	.451	.464	.460	.462	.458	.460	.466	.418	.438	.438	.458	.438	.458	.438
47.0	38.1	60.4	11.0	0.0	0.0000	.451	.466	.466	.458	.456	.456	.472	.425	.435	.445	.456	.435	.456	.435
48.0	38.0	60.1	11.0	.9	.0184	.451	.465	.467	.457	.451	.455	.472	.433	.433	.453	.453	.433	.453	.433
49.0	38.0	60.1	11.0	0.0	0.0000	.451	.473	.465	.463	.449	.459	.467	.430	.430	.451	.451	.430	.461	.430
50.0	37.8	59.9	11.0	.9	.0185	.451	.472	.464	.460	.452	.452	.466	.448	.427	.448	.448	.427	.468	.427

Table 14B — Inferred Pressurant Distribution, Scaling Run 242; South 3.279-cm Nozzle

t (s)	$\bar{T}$ (°C)	$\bar{T}_e$ (°C)	T_p (°C)	β	β/θ	$\bar{X}$	Pressurant Fractions (X) at Locations l: l = 1	2	3	4	5	6	7	8	9	10	11	12	13
COMMENCE VALVE OPENING																			
0.0	19.7	19.7	65.1	1.9	0.0000	0.000	0.000	0.000	0.000	0.000	0.000	0.000	0.000	0.000	0.000	0.000	0.000	0.000	
1.0	22.3	21.9	35.8	92.5	2.6076	.029	.201	.165	.020	.049	.143	.230	-.052	-.052	-.088	-.088	-.016	-.088	-.052
VALVE FULLY OPEN																			
2.0	25.9	25.5	31.2	2.2	.0843	.065	.418	.418	.418	.401	.472	.490	-.329	-.240	-.151	-.329	-.151	-.329	-.240
3.0	28.8	28.9	28.0	1.1	.0379	.098	-2.431	-2.201	-2.087	-2.087	-2.316	-2.316	3.087	1.937	1.363	2.512	1.363	2.512	1.937
4.0	30.9	31.6	25.8	2.9	.0965	.127	-.140	-.105	-.122	-.122	-.122	-.227	.593	.331	.157	.244	.244	.593	.331
5.0	32.9	34.2	25.9	.6	.0195	.154	.035	-.014	-.026	.011	-.026	-.026	.240	.240	.301	.301	.301	.422	.240
6.0	34.1	36.0	25.2	.2	.0032	.170	.129	.083	.129	.110	.101	.027	.166	.166	.213	.213	.213	.398	.259
7.0	35.4	37.8	25.2	3.4	.0945	.192	.230	.222	.175	.230	.238	.238	.127	.127	.127	.206	.127	.246	.206
8.0	36.8	40.0	24.8	1.1	.0278	.213	.311	.251	.251	.205	.172	.146	.185	.185	.218	.218	.152	.284	.185
9.0	37.5	41.6	23.9	4.6	.1173	.232	.277	.232	.186	.158	.181	.249	.192	.192	.277	.249	.249	.333	.249
10.0	37.5	42.3	23.5	7.7	.2013	.252	.249	.239	.249	.239	.265	.249	.217	.217	.244	.244	.244	.351	.271
11.0	38.3	43.9	23.0	2.8	.0636	.269	.270	.280	.261	.275	.280	.275	.179	.251	.299	.251	.251	.347	.275
12.0	38.4	44.6	22.8	7.0	.1589	.285	.317	.298	.294	.335	.349	.335	.110	.248	.271	.271	.225	.362	.294
13.0	38.9	45.9	22.3	3.8	.0760	.299	.358	.350	.358	.337	.337	.341	.158	.201	.286	.265	.265	.350	.286
14.0	39.3	47.2	21.9	3.9	.0721	.312	.336	.375	.344	.371	.375	.304	.158	.197	.296	.296	.296	.375	.316
15.0	39.1	47.4	21.8	7.9	.1093	.322	.351	.362	.339	.347	.355	.390	.202	.241	.300	.300	.300	.378	.319
16.0	39.3	48.3	21.4	4.9	.0887	.334	.351	.343	.328	.343	.343	.351	.228	.247	.339	.358	.339	.432	.339
17.0	39.8	49.8	20.8	2.8	.0432	.345	.378	.365	.354	.354	.361	.392	.261	.296	.347	.347	.279	.416	.330
18.0	39.8	50.4	20.6	5.4	.0939	.356	.371	.364	.371	.360	.381	.377	.277	.310	.360	.360	.327	.427	.344
19.0	39.9	51.2	20.2	5.4	.0891	.367	.398	.382	.366	.388	.401	.404	.291	.291	.372	.372	.340	.404	.356
20.0	39.4	51.2	20.0	9.1	.1523	.377	.409	.393	.397	.416	.429	.429	.272	.288	.368	.384	.336	.400	.384
21.0	39.2	51.7	19.5	6.9	.1059	.387	.438	.429	.410	.432	.447	.460	.265	.296	.373	.373	.342	.404	.358
22.0	39.6	52.5	19.4	.7	.0058	.392	.472	.454	.427	.424	.409	.388	.312	.312	.357	.388	.357	.388	.403
23.0	38.9	52.2	19.0	10.7	.1727	.401	.480	.453	.429	.405	.372	.360	.302	.333	.393	.408	.408	.453	.423
24.0	38.8	52.7	18.7	6.5	.0886	.409	.469	.425	.419	.401	.398	.395	.310	.339	.413	.413	.413	.501	.427
25.0	39.3	54.2	18.5	-.6	-.0068	.416	.439	.425	.419	.419	.419	.419	.321	.377	.419	.405	.419	.489	.433
26.0	39.2	54.7	18.1	6.2	.0787	.423	.451	.440	.427	.440	.418	.413	.315	.342	.437	.410	.410	.519	.478
27.0	39.6	56.1	17.5	.8	.0089	.429	.439	.421	.410	.431	.428	.444	.335	.348	.465	.439	.426	.517	.478
COMMENCE VALVE CLOSURE																			
28.0	38.8	55.4	17.4	12.0	.1620	.437	.474	.445	.430	.459	.474	.487	.322	.322	.440	.440	.414	.493	.480
29.0	37.9	54.6	17.0	5.7	.1682	.443	.487	.479	.476	.476	.484	.487	.330	.303	.423	.423	.423	.503	.463
VALVE FULLY CLOSED																			
30.0	38.1	57.2	14.6	.6	.0183	.448	.495	.481	.465	.479	.481	.484	.352	.340	.434	.434	.434	.481	.458
31.0	40.4	61.1	14.8	-9.7	-.2872	.448	.488	.484	.475	.468	.466	.473	.350	.371	.447	.447	.447	.468	.436
32.0	41.5	63.0	14.9	-4.5	-.1322	.448	.486	.465	.444	.454	.469	.484	.384	.373	.457	.446	.446	.477	.436
33.0	42.1	64.1	15.0	-2.5	-.0725	.448	.502	.471	.449	.457	.467	.469	.371	.392	.463	.443	.443	.463	.432
34.0	42.4	64.7	15.0	-1.2	-.0355	.448	.498	.482	.460	.458	.464	.478	.365	.385	.456	.436	.426	.476	.436
35.0	42.6	65.0	15.0	-.6	-.0176	.448	.483	.475	.465	.463	.473	.481	.375	.375	.465	.445	.425	.465	.435
36.0	42.6	65.0	15.0	0.0	0.0000	.448	.479	.473	.467	.471	.473	.473	.367	.367	.457	.437	.437	.477	.447
37.0	42.6	65.0	15.0	0.0	0.0000	.448	.469	.463	.459	.459	.461	.465	.375	.385	.445	.445	.445	.495	.455
38.0	42.6	65.0	15.0	0.0	0.0000	.448	.465	.459	.453	.455	.463	.465	.371	.391	.461	.441	.441	.481	.471
39.0	42.4	64.7	15.0	.6	.0176	.448	.453	.451	.457	.455	.465	.475	.393	.393	.453	.453	.433	.483	.453
40.0	42.3	64.4	15.0	.6	.0177	.448	.457	.453	.457	.461	.477	.485	.398	.398	.449	.449	.429	.469	.439
41.0	42.1	64.1	15.0	.6	.0178	.448	.456	.454	.456	.462	.476	.478	.401	.391	.462	.452	.441	.462	.431
42.0	42.1	64.1	15.0	0.0	0.0000	.448	.453	.451	.451	.461	.469	.473	.406	.385	.457	.457	.436	.477	.446
43.0	42.0	63.1	15.9	.6	.0179	.448	.462	.457	.451	.464	.474	.477	.379	.379	.453	.453	.453	.474	.443
44.0	42.0	62.6	16.5	0.0	0.0000	.448	.456	.449	.447	.462	.469	.473	.388	.388	.443	.453	.453	.486	.453
45.0	41.8	61.6	17.3	.6	.0181	.448	.466	.448	.443	.461	.466	.475	.382	.382	.439	.461	.439	.507	.450
46.0	41.6	60.7	18.2	.6	.0182	.448	.474	.446	.453	.462	.471	.479	.398	.398	.434	.434	.434	.493	.446
47.0	41.6	60.0	19.0	0.0	0.0000	.448	.476	.447	.449	.471	.474	.483	.393	.393	.430	.430	.430	.503	.442
48.0	41.5	59.1	19.7	.6	.0183	.448	.475	.457	.449	.472	.480	.493	.399	.386	.424	.424	.424	.500	.437
49.0	41.5	58.7	20.3	0.0	0.0000	.448	.470	.454	.451	.464	.477	.490	.430	.378	.417	.417	.417	.496	.457
50.0	41.5	58.2	20.9	0.0	0.0000	.448	.477	.464	.466	.469	.472	.498	.402	.375	.415	.415	.415	.496	.456

Table 15B — Inferred Pressurant Distribution, Scaling Run 243; South 3.279-cm Nozzle

t (s)	$\bar{T}$ (°C)	$\bar{T}_e$ (°C)	$\bar{T}_\ell$ (°C)	β	β/θ	$\bar{X}$	Pressurant Fractions (X) at Locations l: l = 1	2	3	4	5	6	7	8	9	10	11	12	13
CONMENCE VALVE OPENING																			
0.0	16.7	16.7	16.6	.4	0.0000	0.000	0.000	0.000	0.000	0.000	0.000	0.000	0.000	0.000	0.000	0.000	0.000	0.000	
1.0	18.5	18.4	21.2	95.5	2.0351	.021	.771	.518	.046	.336	.626	.844	-.280	-.280	-.643	-.643	-.280	-.461	-.280
VALVE FULLY OPEN																			
2.0	22.5	22.7	19.4	1.7	.0631	.057	-.654	-.592	-.529	-.529	-.747	-.716	.622	.622	.778	.778	.467	.778	.467
3.0	25.5	26.7	14.1	-.1	-.0043	.091	-.079	-.055	-.024	-.055	-.103	-.127	.238	.238	.238	.238	.159	.276	.238
4.0	27.7	30.0	10.8	1.6	.0551	.122	.005	.046	.051	.020	.005	.015	.254	.202	.228	.176	.176	.228	.176
5.0	29.4	33.0	9.0	2.8	.0896	.150	.089	.097	.135	.110	.085	.064	.181	.181	.181	.222	.181	.243	.181
6.0	31.1	35.9	8.1	.5	.0143	.174	.136	.136	.143	.133	.115	.107	.226	.172	.226	.206	.190	.262	.208
7.0	32.9	39.0	7.6	-1.2	-.0311	.196	.155	.171	.164	.177	.171	.148	.202	.202	.234	.234	.202	.250	.234
8.0	33.4	40.6	7.5	5.6	.1564	.218	.235	.211	.193	.202	.203	.208	.196	.226	.226	.226	.211	.271	.226
9.0	34.1	42.4	7.6	4.0	.1002	.238	.240	.252	.249	.243	.249	.223	.223	.252	.223	.223	.223	.266	.223
10.0	34.3	43.2	7.7	6.3	.1078	.251	.272	.278	.286	.272	.272	.258	.213	.213	.241	.241	.213	.255	.241
11.0	35.2	45.2	7.8	1.6	.0359	.267	.282	.293	.306	.301	.280	.274	.242	.229	.242	.242	.242	.282	.256
12.0	36.3	47.5	7.9	-.7	-.0137	.282	.284	.279	.289	.279	.277	.274	.249	.274	.274	.274	.274	.337	.299
13.0	35.8	47.6	8.2	9.3	.2273	.299	.285	.302	.300	.300	.315	.333	.239	.290	.302	.302	.290	.328	.302
14.0	36.1	48.8	8.3	4.0	.0796	.313	.324	.324	.324	.339	.344	.327	.250	.275	.300	.324	.300	.312	.324
15.0	35.9	49.3	8.5	7.1	.1443	.327	.346	.346	.368	.334	.316	.324	.248	.272	.309	.334	.334	.370	.346
16.0	36.9	51.2	8.6	-1.7	-.0261	.337	.408	.356	.354	.314	.323	.316	.248	.272	.342	.366	.342	.377	.366
17.0	36.5	51.2	8.7	9.1	.1230	.346	.396	.375	.361	.337	.335	.337	.248	.271	.366	.366	.366	.377	.366
18.0	36.2	51.5	8.9	7.3	.1302	.358	.390	.397	.380	.324	.362	.343	.254	.289	.371	.371	.371	.418	.383
19.0	36.0	51.9	9.0	6.6	.1141	.369	.383	.383	.383	.364	.383	.403	.285	.285	.378	.378	.378	.413	.378
20.0	35.9	52.3	9.1	6.3	.1021	.379	.387	.392	.390	.390	.411	.411	.269	.316	.385	.374	.362	.443	.397
21.0	36.1	53.2	9.2	3.3	.0471	.388	.394	.403	.417	.399	.392	.394	.285	.330	.399	.399	.399	.433	.399
22.0	37.0	55.1	9.2	-3.6	-.0433	.395	.406	.402	.397	.404	.406	.408	.293	.347	.402	.413	.413	.434	.413
23.0	36.4	54.8	9.3	9.0	.1412	.405	.435	.435	.406	.417	.419	.426	.290	.356	.400	.400	.422	.433	.422
24.0	36.0	54.6	9.4	10.0	.1021	.411	.458	.439	.430	.414	.412	.421	.308	.330	.419	.419	.419	.452	.419
25.0	35.9	54.9	9.5	5.7	.0736	.418	.470	.459	.435	.411	.415	.420	.325	.347	.424	.424	.424	.446	.435
26.0	35.9	55.4	9.5	5.3	.0676	.426	.467	.454	.441	.426	.417	.415	.343	.365	.430	.430	.430	.463	.452
27.0	35.8	55.8	9.6	5.0	.0624	.433	.458	.443	.425	.436	.434	.428	.361	.350	.447	.436	.447	.501	.458
CONMENCE VALVE CLOSURE																			
28.0	35.5	55.8	9.6	7.7	.0975	.440	.454	.452	.458	.448	.465	.458	.350	.328	.458	.437	.437	.513	.458
29.0	35.6	56.5	9.6	1.7	.0357	.446	.464	.457	.449	.451	.451	.444	.380	.370	.455	.444	.444	.508	.476
VALVE FULLY CLOSED																			
30.0	35.2	56.3	9.5	4.1	.0874	.451	.493	.486	.478	.476	.476	.465	.356	.356	.463	.441	.441	.473	.463
31.0	36.3	58.3	9.5	-6.8	-.1458	.451	.491	.485	.467	.473	.479	.477	.362	.342	.465	.444	.465	.475	.444
32.0	37.3	60.1	9.5	-5.5	-.1185	.451	.476	.470	.478	.472	.474	.478	.361	.361	.460	.460	.460	.470	.450
33.0	37.7	60.9	9.5	-2.7	-.0572	.451	.468	.468	.468	.466	.470	.478	.365	.384	.462	.462	.462	.472	.443
34.0	38.1	61.5	9.5	-1.7	-.0374	.451	.470	.470	.468	.464	.468	.470	.376	.395	.463	.453	.453	.482	.434
35.0	38.1	61.5	9.5	0.0	0.0000	.451	.474	.468	.468	.462	.466	.466	.370	.389	.466	.447	.447	.495	.447
36.0	38.1	61.5	9.5	0.0	0.0000	.451	.464	.460	.460	.458	.462	.462	.371	.381	.468	.458	.458	.497	.468
37.0	38.1	61.5	9.5	0.0	0.0000	.451	.459	.461	.455	.459	.461	.461	.374	.374	.471	.471	.471	.480	.471
38.0	37.9	61.2	9.5	.9	.0186	.451	.454	.460	.460	.460	.460	.462	.392	.373	.469	.469	.469	.479	.460
39.0	37.9	61.2	9.5	0.0	0.0000	.451	.454	.458	.460	.456	.458	.462	.389	.369	.466	.466	.466	.495	.466
40.0	37.7	60.9	9.5	.9	.0188	.451	.456	.456	.456	.458	.462	.468	.384	.384	.462	.462	.462	.491	.462
41.0	37.6	60.6	9.5	.9	.0189	.451	.465	.459	.453	.457	.461	.469	.389	.389	.457	.457	.467	.487	.457
42.0	37.6	60.6	9.5	0.0	0.0000	.451	.464	.460	.456	.464	.458	.474	.395	.395	.454	.454	.454	.483	.454
43.0	37.4	60.4	9.5	.9	.0191	.451	.470	.466	.460	.462	.460	.472	.393	.393	.452	.452	.452	.482	.452
44.0	37.4	60.4	9.5	0.0	0.0000	.451	.472	.465	.459	.457	.457	.465	.390	.390	.469	.449	.469	.478	.449
45.0	37.3	60.1	9.5	.9	.0192	.451	.469	.469	.456	.454	.454	.465	.406	.395	.465	.446	.465	.475	.446
46.0	37.1	59.8	9.5	.9	.0194	.451	.463	.461	.451	.453	.457	.463	.401	.401	.461	.461	.461	.471	.461
47.0	37.1	59.8	9.5	0.0	0.0000	.451	.464	.462	.454	.458	.458	.460	.400	.400	.460	.460	.460	.470	.460
48.0	36.9	59.5	9.5	.9	.0195	.451	.465	.469	.455	.455	.453	.461	.397	.407	.457	.457	.457	.477	.457
49.0	36.9	59.5	9.5	0.0	0.0000	.451	.460	.466	.452	.460	.452	.458	.412	.412	.452	.452	.452	.482	.452
50.0	36.8	59.2	9.5	.9	.0197	.451	.462	.466	.458	.460	.452	.456	.407	.407	.458	.448	.458	.486	.448

Table 16B — Inferred Pressurant Distribution, Scaling Run 244; South 3.279-cm Nozzle

t (s)	$\bar{T}$ (°C)	$\bar{T}_a$ (°C)	$\bar{T}_p$ (°C)	β	β/θ	$\bar{X}$	Pressurant Fractions (X) at Locations l: l = 1	2	3	4	5	6	7	8	9	10	11	12	13
COMMENCE VALVE OPENING																			
0.0	17.6	17.6	18.9	.4	.0000	0.000	0.000	0.000	0.000	0.000	0.000	0.000	0.000	0.000	0.000	0.000	0.000	0.000	
1.0	19.6	19.5	24.6	92.0	2.0273	.022	.378	.262	.029	.126	.281	.358	-.164	-.164	-.164	-.164	-.164	-.164	-.164
VALVE FULLY OPEN																			
2.0	23.5	23.5	23.0	6.9	.2637	.059	-4.174	-3.985	-3.417	-3.039	-4.363	-5.308	3.578	3.578	3.578	3.578	2.633	4.523	3.578
3.0	26.5	27.5	17.3	.8	.0279	.093	-.093	-.093	-.093	-.084	-.143	-.162	.282	.282	.183	.282	.183	.380	.282
4.0	28.7	30.8	14.1	2.5	.0843	.123	-.008	-.002	.034	.034	.004	-.008	.251	.281	.191	.221	.161	.251	.191
5.0	30.6	33.8	12.6	2.1	.0652	.150	.093	.084	.103	.093	.084	.070	.197	.244	.197	.197	.150	.244	.197
6.0	32.0	36.3	11.8	3.6	.1067	.175	.163	.138	.138	.146	.126	.130	.171	.252	.191	.171	.191	.232	.232
7.0	33.7	39.2	11.2	-.1	-.0025	.197	.161	.161	.175	.172	.175	.143	.200	.236	.200	.200	.200	.272	.272
8.0	35.1	41.8	11.0	.7	.0172	.218	.204	.204	.204	.214	.220	.201	.201	.217	.217	.217	.217	.249	.266
9.0	35.6	43.4	10.9	5.1	.1342	.238	.244	.251	.241	.238	.235	.214	.177	.238	.208	.238	.238	.300	.269
10.0	36.2	44.7	10.9	2.3	.0357	.249	.244	.250	.247	.238	.220	.232	.208	.267	.238	.238	.238	.327	.297
11.0	36.4	45.8	10.9	6.1	.1490	.268	.285	.265	.251	.268	.280	.320	.191	.234	.263	.263	.248	.306	.306
12.0	37.2	47.5	11.0	2.3	.0495	.283	.301	.299	.307	.301	.301	.326	.217	.244	.271	.271	.244	.299	.299
13.0	37.5	48.8	11.0	4.4	.0931	.298	.319	.287	.290	.298	.301	.325	.229	.295	.282	.295	.295	.335	.322
14.0	38.1	50.2	11.2	2.7	.0518	.311	.323	.312	.310	.325	.328	.320	.271	.323	.297	.297	.297	.323	.323
15.0	37.8	50.7	11.3	7.2	.1488	.325	.349	.349	.334	.329	.331	.323	.255	.280	.318	.306	.331	.369	.356
16.0	37.5	50.8	11.4	8.4	.1681	.339	.340	.350	.350	.347	.360	.365	.259	.284	.335	.335	.335	.385	.360
17.0	37.5	51.6	11.5	5.3	.0894	.350	.378	.376	.376	.373	.388	.396	.261	.273	.323	.336	.336	.373	.361
18.0	38.0	52.9	11.6	2.0	.0323	.360	.402	.394	.397	.399	.387	.358	.249	.297	.346	.346	.346	.394	.370
19.0	38.2	53.6	11.7	2.9	.0296	.367	.426	.412	.391	.393	.376	.364	.262	.286	.357	.333	.357	.405	.405
20.0	38.1	54.0	11.8	6.1	.0996	.377	.400	.395	.412	.398	.372	.360	.270	.341	.365	.365	.377	.436	.412
21.0	37.7	54.1	11.8	8.0	.1303	.387	.394	.404	.387	.397	.399	.397	.295	.342	.366	.390	.390	.437	.437
22.0	38.0	55.1	11.9	2.8	.0398	.396	.402	.402	.402	.411	.420	.397	.311	.358	.381	.392	.392	.450	.427
23.0	38.3	56.1	11.9	1.6	.0202	.403	.410	.412	.410	.426	.419	.414	.306	.374	.396	.396	.396	.441	.441
24.0	38.5	57.0	12.0	2.9	.0376	.411	.408	.413	.419	.433	.417	.404	.319	.386	.442	.419	.408	.442	.430
25.0	39.0	58.3	12.1	-.9	-.0103	.417	.413	.400	.415	.415	.408	.415	.339	.404	.447	.426	.426	.469	.447
26.0	38.4	57.7	12.1	11.4	.1229	.423	.436	.436	.431	.444	.453	.488	.352	.374	.418	.418	.396	.440	.418
27.0	37.7	57.2	12.1	10.3	.1435	.431	.456	.458	.458	.458	.476	.491	.356	.389	.411	.411	.411	.422	.411
28.0	36.9	56.4	12.1	11.8	.1619	.439	.469	.460	.469	.469	.478	.489	.379	.401	.424	.401	.424	.424	.424
COMMENCE VALVE CLOSURE																			
29.0	37.0	56.9	12.1	4.4	.0484	.445	.468	.466	.489	.491	.497	.486	.386	.397	.431	.406	.408	.431	.431
30.0	37.1	57.7	12.1	.9	.0192	.451	.473	.471	.469	.495	.482	.475	.396	.418	.440	.440	.418	.440	.440
VALVE FULLY CLOSED																			
31.0	37.2	58.1	12.0	.4	.0100	.454	.475	.473	.466	.479	.481	.477	.401	.423	.466	.445	.423	.445	.445
32.0	38.8	60.9	12.1	-8.8	-.1961	.454	.466	.454	.470	.472	.472	.476	.399	.440	.460	.450	.440	.450	.450
33.0	39.7	62.6	12.2	-5.0	-.1187	.454	.457	.451	.451	.461	.467	.470	.395	.455	.455	.455	.455	.474	.455
34.0	40.1	63.2	12.2	-1.6	-.0339	.454	.470	.464	.458	.458	.464	.473	.407	.446	.446	.446	.446	.466	.456
35.0	40.2	63.5	12.3	-.8	-.0177	.454	.489	.462	.450	.456	.462	.469	.391	.430	.450	.450	.450	.469	.469
36.0	40.4	63.7	12.3	-.8	-.0176	.454	.483	.456	.448	.450	.458	.462	.402	.431	.460	.460	.450	.479	.460
37.0	40.4	63.7	12.3	0.0	0.0000	.454	.477	.467	.460	.456	.464	.467	.399	.419	.458	.458	.438	.477	.458
38.0	40.4	63.7	12.3	0.0	0.0000	.454	.485	.461	.444	.448	.459	.457	.409	.428	.457	.457	.448	.487	.457
39.0	40.2	63.5	12.3	.8	.0176	.454	.473	.459	.457	.457	.457	.461	.403	.422	.461	.461	.442	.481	.461
40.0	40.1	63.2	12.2	.8	.0177	.454	.468	.460	.458	.460	.462	.466	.399	.419	.458	.458	.458	.477	.458
41.0	39.9	62.9	12.2	.8	.0179	.454	.464	.457	.455	.461	.463	.466	.415	.425	.455	.455	.455	.474	.455
42.0	39.9	62.9	12.2	0.0	0.0000	.454	.462	.454	.456	.462	.464	.470	.413	.413	.452	.472	.452	.472	.452
43.0	39.7	62.6	12.2	.8	.0180	.454	.459	.451	.455	.467	.469	.472	.407	.417	.467	.467	.457	.467	.447
44.0	39.6	62.3	12.2	.8	.0181	.454	.454	.446	.458	.464	.468	.480	.418	.418	.458	.458	.458	.458	.458
45.0	39.6	62.3	12.2	0.0	0.0000	.454	.452	.450	.458	.464	.464	.480	.414	.424	.454	.454	.454	.474	.454
46.0	39.4	62.1	12.2	.8	.0182	.454	.453	.449	.461	.465	.463	.475	.405	.425	.465	.465	.465	.465	.445
47.	39.4	62.1	12.2	0.0	0.0000	.454	.466	.458	.462	.470	.464	.472	.418	.418	.458	.458	.458	.458	.438
48.	39.3	61.8	12.2	.8	.0184	.454	.469	.463	.461	.465	.461	.463	.409	.419	.469	.449	.449	.469	.449
49.0	39.3	61.8	12.2	0.0	0.0000	.454	.473	.467	.467	.471	.459	.463	.402	.423	.463	.443	.463	.463	.443
50.0	39.1	61.5	12.2	.8	.0185	.454	.471	.471	.471	.477	.465	.467	.400	.420	[illegible]	.441	.441	.471	.441

Table 17B — Inferred Pressurant Distribution, Scaling Run 245; South 3.279-cm Nozzle

t (s)	$\bar{T}$ (°C)	$\bar{T}_a$ (°C)	$\bar{T}_p$ (°C)	β	β/θ	$\bar{X}$	Pressurant Fractions (X) at Locations l: l = 1	2	3	4	5	6	7	8	9	10	11	12	13
CONMENCE VALVE OPENING																			
0.0	26.1	26.1	54.8	1.2	0.0000	0.000	0.000	0.000	0.000	0.000	0.000	0.000	0.000	0.000	0.000	0.000	0.000	0.000	
1.0	28.5	28.1	44.2	76.0	1.7000	.022	.178	.153	.091	.109	.153	.184	-.127	-.065	-.065	-.065	-.065	-.127	-.065
VALVE FULLY OPEN																			
2.0	32.5	32.2	38.2	.4	.0142	.060	.546	.496	.496	.546	.629	.596	-.516	-.433	-.267	-.267	-.267	-.433	-.350
3.0	35.3	35.3	35.8	5.3	.2047	.095	5.730	5.321	4.298	3.684	4.911	4.707	-6.547	-4.501	-2.455	-2.455	-2.455	-4.501	-4.501
4.0	37.8	38.4	33.5	1.7	.0590	.125	-.265	-.306	-.223	-.182	-.265	-.389	.791	.584	.273	.170	.273	.584	.584
5.0	39.6	40.7	32.9	.8	.0217	.147	-.134	-.032	-.198	-.070	-.070	-.019	.493	.429	.211	.173	.211	.493	.429
6.0	41.4	43.4	32.0	3.5	.1263	.178	.048	.048	.091	.109	.065	.074	.293	.337	.162	.162	.162	.425	.337
7.0	42.9	45.7	31.5	2.2	.0688	.201	.137	.137	.109	.137	.109	.109	.328	.328	.186	.186	.186	.328	.328
8.0	43.3	46.8	30.7	5.8	.1081	.215	.188	.175	.132	.175	.212	.237	.293	.293	.231	.169	.169	.293	.231
9.0	43.9	48.1	30.5	5.5	.1495	.236	.263	.241	.201	.212	.212	.224	.258	.258	.201	.229	.229	.286	.258
10.0	44.5	49.4	30.2	5.5	.1380	.255	.266	.261	.234	.255	.261	.266	.120	.224	.224	.224	.276	.381	.328
11.0	45.6	51.4	30.0	1.1	.0237	.272	.263	.272	.286	.286	.272	.291	.109	.296	.225	.225	.225	.413	.366
12.0	46.3	53.4	28.8	2.6	.0554	.287	.301	.301	.301	.326	.314	.306	.175	.297	.257	.257	.257	.338	.297
13.0	47.1	55.0	28.5	1.8	.0352	.301	.344	.341	.318	.306	.318	.321	.149	.264	.245	.264	.283	.379	.379
14.0	46.9	55.5	28.5	7.2	.1564	.316	.326	.319	.304	.311	.330	.374	.200	.274	.274	.274	.311	.423	.385
15.0	47.0	56.1	28.0	5.8	.0759	.325	.386	.372	.329	.336	.354	.368	.179	.286	.286	.286	.286	.393	.358
16.0	46.9	56.9	27.5	6.6	.1697	.342	.437	.400	.369	.369	.349	.342	.267	.267	.301	.301	.301	.369	.369
17.0	47.4	58.2	27.4	-.2	-.0026	.349	.438	.431	.389	.376	.363	.341	.263	.263	.328	.293	.293	.392	.360
18.0	47.8	59.7	26.6	2.9	.0490	.360	.427	.415	.400	.391	.369	.381	.215	.261	.381	.336	.306	.381	.412
19.0	48.5	61.5	26.3	-.6	-.0085	.369	.410	.404	.393	.415	.401	.413	.240	.296	.381	.353	.325	.381	.381
20.0	48.0	61.3	26.3	8.3	.1483	.380	.429	.386	.401	.418	.449	.481	.235	.249	.321	.349	.378	.435	.406
21.0	48.3	62.6	25.7	2.7	.0377	.388	.462	.457	.454	.459	.470	.476	.259	.232	.286	.313	.367	.421	.394
22.0	48.0	62.8	25.3	8.2	.0861	.395	.464	.459	.467	.467	.472	.483	.232	.232	.312	.339	.392	.419	.392
23.0	48.1	63.4	25.4	4.2	.0592	.403	.495	.479	.445	.466	.477	.479	.232	.245	.351	.351	.390	.429	.403
24.0	48.0	64.2	24.8	5.3	.0716	.411	.485	.463	.465	.460	.460	.452	.283	.283	.359	.359	.384	.435	.460
25.0	47.9	65.0	24.2	5.1	.0667	.419	.479	.470	.455	.460	.492	.499	.318	.318	.342	.367	.367	.428	.453
26.0	47.8	65.5	24.0	5.3	.0672	.426	.488	.479	.474	.474	.483	.462	.325	.349	.373	.397	.373	.421	.445
CONMENCE VALVE CLOSURE																			
27.0	48.1	66.7	23.5	2.0	.0223	.432	.507	.470	.465	.460	.451	.428	.351	.363	.375	.409	.432	.467	.444
28.0	46.8	65.6	23.0	9.2	.2088	.441	.534	.520	.494	.487	.450	.457	.365	.341	.341	.388	.412	.482	.459
VALVE FULLY CLOSED																			
29.0	46.9	67.3	21.5	.7	.0147	.445	.525	.505	.481	.481	.488	.492	.355	.333	.355	.376	.420	.485	.485
30.0	49.4	71.6	21.7	-12.4	-.2802	.445	.495	.487	.489	.459	.463	.467	.377	.397	.387	.397	.437	.487	.477
31.0	50.9	74.1	21.9	-6.8	-.1543	.445	.496	.482	.469	.461	.469	.463	.333	.352	.428	.428	.448	.486	.467
32.0	51.6	75.2	22.0	-2.9	-.0636	.445	.483	.481	.475	.462	.458	.471	.372	.372	.428	.428	.438	.475	.438
33.0	51.9	75.7	22.1	-1.4	-.0322	.445	.471	.473	.469	.462	.465	.469	.387	.387	.424	.424	.443	.462	.443
34.0	52.1	76.0	22.1	-.7	-.0159	.445	.469	.465	.467	.462	.465	.465	.410	.391	.428	.437	.428	.456	.437
35.0	52.1	76.0	22.1	0.0	0.0000	.445	.473	.469	.466	.466	.471	.473	.397	.397	.434	.415	.415	.453	.453
36.0	52.1	76.0	22.1	0.0	0.0000	.445	.471	.469	.458	.462	.465	.465	.406	.406	.425	.425	.425	.452	.452
37.0	52.1	76.0	22.1	0.0	0.0000	.445	.468	.468	.471	.462	.464	.468	.405	.405	.423	.423	.423	.460	.442
38.0	51.9	75.7	22.1	.7	.0159	.445	.467	.465	.476	.467	.468	.481	.401	.401	.420	.420	.420	.457	.439
39.0	51.7	75.5	22.1	.7	.0160	.445	.465	.467	.477	.467	.467	.478	.396	.396	.415	.415	.433	.452	.452
40.0	51.6	75.2	22.0	.7	.0161	.445	.467	.464	.467	.466	.467	.471	.396	.405	.424	.424	.424	.462	.443
41.0	51.4	74.9	22.0	.7	.0163	.445	.473	.473	.465	.463	.469	.476	.399	.418	.418	.418	.418	.456	.437
42.0	51.4	74.8	22.1	0.0	0.0000	.445	.473	.473	.469	.467	.471	.476	.395	.414	.414	.414	.433	.452	.433
43.0	51.2	73.8	23.0	.7	.0164	.445	.472	.472	.468	.466	.468	.472	.393	.403	.422	.422	.422	.472	.432
44.0	51.1	72.9	23.8	.7	.0165	.445	.468	.468	.466	.470	.468	.474	.395	.395	.415	.415	.415	.497	.435
45.0	51.1	72.3	24.5	0.0	0.0000	.445	.468	.468	.468	.473	.473	.479	.389	.410	.410	.410	.410	.493	.431
46.0	50.9	71.6	25.1	.7	.0166	.445	.464	.464	.467	.469	.471	.482	.402	.424	.402	.402	.402	.488	.445
47.0	50.7	70.7	25.8	.7	.0167	.445	.459	.461	.461	.465	.467	.483	.396	.418	.396	.407	.418	.496	.452
48.0	50.7	70.4	26.2	0.0	0.0000	.445	.453	.465	.458	.469	.465	.478	.390	.424	.390	.406	.424	.496	.462
49.0	50.7	69.9	26.8	0.0	0.0000	.445	.453	.458	.455	.471	.460	.476	.383	.430	.383	.407	.430	.499	.476
50.0	50.6	69.1	27.4	.7	.0168	.445	.449	.456	.456	.473	.459	.475	.396	.420	.396	.420	.420	.492	.468

Table 18B — Inferred Pressurant Distribution, Scaling Run 246; South 3.279-cm Nozzle

t (s)	$\bar{T}$ (°C)	$\bar{T}_e$ (°C)	$\bar{T}_p$ (°C)	β	β/θ	$\bar{X}$	Pressurant Fractions (X) at Locations l: l = 1	2	3	4	5	6	7	8	9	10	11	12	13
COMMENCE VALVE OPENING																			
0.0	16.2	16.2	25.3	.5	0.0000	0.000	0.000	0.000	0.000	0.000	0.000	0.000	0.000	0.000	0.000	0.000	0.000	0.000	
1.0	18.0	17.9	22.0	93.4	1.8204	.019	519	.324	.079	.177	275	.397	-.409	-.165	-.165	-.165	-.287	-.165	-.165
VALVE FULLY OPEN																			
2.0	21.6	21.8	19.2	10.7	.4138	.056	-.957	-.685	-.259	-.453	-.724	-.918	.980	.787	.399	.593	.593	.787	.593
3.0	25.0	26.0	14.4	-4.8	-.1662	.089	-.078	-.027	-.018	-.044	-.112	-.112	.324	.239	.153	.153	.196	.239	.239
4.0	27.3	29.4	11.5	1.2	.0402	.118	.002	.030	.030	.030	.019	.025	.204	.260	.176	.148	.148	.232	.232
5.0	28.9	32.2	9.9	3.2	.1028	.146	.080	.097	.106	.110	.083	.056	.222	.222	.177	.133	.155	.222	.222
6.0	30.6	35.0	9.1	.8	.0234	.169	.115	.127	.127	.135	.135	.131	.204	.224	.166	.166	.165	.262	.224
7.0	32.0	37.5	8.8	2.6	.0740	.192	.183	.190	.172	.169	.155	.162	.218	.218	.183	.183	.165	.252	.252
8.0	32.6	39.0	8.7	6	.1658	.214	.225	.228	.221	.215	.198	.208	.225	.208	.175	.175	.208	.258	.241
9.0	33.4	40.8	8.8		.1002	.234	.259	.244	.247	.231	.222	.219	.206	.206	.206	.206	.222	.300	.269
10.0	34.2	42.8	8.8		.0544	.251	.307	.289	.275	.245	.245	.230	.177	.222	.222	.222	.236	.310	.281
11.0	35.0	44.5	8.9		.0535	.267	.297	.297	.281	.275	.264	.244	.205	.205	.261	.261	.275	.317	.289
12.0	36.1	46.4	9.0		-.0582	.275	.303	.314	.319	.303	.282	.255	.191	.164	.271	.271	.264	.325	.298
13.0	36.8	48.0	9.1	2.0	.0402	.290	.295	.300	.303	.303	.287	.272	.226	.213	.290	.303	.316	.341	.316
14.0	36.9	49.1	9.2	4.8	.0972	.304	.334	.344	.339	.326	.326	.319	.196	.221	.296	.296	.309	.321	.321
15.0	36.7	49.5	9.3	7.2	.1489	.318	.344	.354	.364	.352	.354	.359	.217	.205	.292	.305	.317	.342	.329
16.0	36.2	49.5	9.4	8.7	.1784	.332	.366	.378	.366	.364	.378	.381	.231	.231	.306	.306	.319	.356	.331
17.0	36.0	49.9	9.5	7.0	.1254	.344	.381	.378	.381	.363	.378	.388	.227	.240	.314	.326	.351	.376	.363
18.0	36.3	50.9	9.7	4.0	.0644	.354	.387	.389	.396	.382	.374	.374	.258	.282	.331	.331	.367	.379	.355
19.0	36.4	51.5	9.8	3.8	.0390	.361	.391	.384	.375	.382	.375	.384	.293	.293	.341	.341	.353	.389	.389
20.0	37.2	53.2	9.9	-2.0	-.0267	.369	.387	.399	.399	.392	.387	.382	.299	.322	.346	.346	.357	.403	.392
21.0	37.3	54.0	9.9	3.8	.0557	.379	.419	.399	.388	.406	.394	.397	.290	.313	.358	.358	.392	.403	.403
22.0	37.0	54.2	10.0	7.3	.1111	.388	.435	.403	.383	.392	.424	.437	.281	.338	.360	.372	.394	.417	.406
23.0	36.6	54.1	10.0	8.5	.1278	.397	.445	.445	.434	.439	.448	.448	.291	.268	.359	.359	.416	.427	.382
24.0	36.4	54.4	10.1	6.0	.0792	.405	.466	.459	.457	.450	.457	.459	.263	.297	.364	.364	.410	.432	.382
25.0	36.8	55.4	10.1	1.2	.0138	.412	.470	.463	.450	.450	.448	.452	.247	.291	.379	.401	.434	.445	.423
26.0	36.0	54.7	10.1	13.2	.1391	.418	.472	.474	.467	.472	.463	.429	.234	.301	.391	.413	.425	.456	.430
27.0	36.5	55.9	10.2	-1.1	-.0122	.424	.457	.465	.468	.476	.470	.479	.267	.321	.398	.389	.409	.474	.441
28.0	37.0	57.2	10.2	-1.8	-.0177	.430	.459	.465	.463	.476	.462	.463	.297	.340	.425	.425	.414	.446	.446
COMMENCE VALVE CLOSURE																			
29.0	36.1	56.2	10.2	12.4	.1739	.438	.512	.497	.476	.465	.473	.510	.315	.358	.391	.402	.413	.434	.445
30.0	36.0	56.7	10.2	2.5	.0489	.444	.497	.495	.491	.485	.485	.487	.332	.353	.418	.418	.407	.439	.461
VALVE FULLY CLOSED																			
31.0	35.8	56.7	10.1	3.2	.0638	.449	.516	.512	.489	.491	.489	.512	.332	.364	.407	.418	.418	.439	.450
32.0	37.4	59.6	10.1	-9.9	-.1951	.449	.519	.500	.494	.490	.492	.492	.324	.385	.426	.426	.416	.426	.446
33.0	38.0	60.7	10.2	-3.8	-.0740	.449	.499	.497	.487	.483	.471	.477	.357	.396	.436	.436	.426	.436	.436
34.0	38.5	61.5	10.2	-2.7	-.0541	.449	.497	.497	.489	.487	.487	.483	.349	.378	.417	.426	.436	.456	.436
35.0	38.8	62.1	10.2	-1.6	-.0354	.449	.500	.494	.485	.479	.481	.467	.359	.379	.417	.437	.446	.456	.437
36.0	39.0	62.4	10.2	-.9	-.0175	.449	.489	.489	.483	.479	.481	.464	.370	.370	.427	.427	.446	.466	.446
37.0	39.0	62.4	10.2	0.0	0.0000	.449	.485	.483	.482	.478	.474	.472	.359	.378	.416	.436	.445	.474	.455
38.0	39.0	62.4	10.2	0.0	0.0000	.449	.472	.475	.475	.477	.479	.475	.379	.370	.427	.427	.447	.475	.456
39.0	38.8	62.1	10.2	.9	.0175	.449	.465	.469	.470	.476	.474	.472	.382	.363	.420	.440	.449	.497	.459
40.0	38.8	62.1	10.2	0.0	0.0000	.449	.465	.467	.458	.467	.463	.456	.390	.381	.438	.438	.458	.496	.459
41.0	38.6	61.8	10.2	.9	.0176	.449	.464	.458	.444	.452	.452	.456	.410	.390	.448	.446	.458	.487	.468
42.0	38.5	61.5	10.2	.9	.0178	.449	.468	.462	.453	.451	.459	.459	.406	.406	.445	.445	.455	.484	.445
43.0	38.5	61.5	10.2	0.0	0.0000	.449	.471	.467	.461	.443	.455	.465	.404	.395	.443	.443	.453	.482	.442
44.0	38.3	61.2	10.2	.9	.0179	.449	.476	.471	.467	.447	.453	.465	.402	.402	.441	.441	.451	.480	.441
45.0	38.3	61.2	10.2	0.0	0.0000	.449	.467	.459	.465	.449	.447	.453	.412	.402	.451	.431	.461	.490	.451
46.0	38.2	61.0	10.2	.9	.0180	.449	.475	.471	.463	.457	.453	.453	.409	.408	.447	.428	.438	.487	.447
47.0	38.0	60.7	10.2	.9	.0182	.449	.475	.473	.469	.465	.459	.449	.438	.438	.439	.428	.449	.479	.439
48.0	38.0	60.7	10.2	0.0	0.0000	.449	.475	.471	.469	.467	.467	.467	.413	.384	.433	.433	.443	.473	.432
49.0	38.0	60.7	10.2	0.0	0.0000	.449	.472	.468	.466	.468	.464	.466	.426	.406	.426	.426	.436	.486	.426
50.0	37.8	60.4	10.2	.9	.0183	.449	.476	.472	.470	.476	.462	.470	.422	.402	.422	.402	.442	.482	.442

Table 19B — Inferred Pressurant Distribution, Scaling Run 247; South 3.279-cm Nozzle

t (s)	$\bar{T}$ (°C)	$\bar{T}_a$ (°C)	$\bar{T}_p$ (°C)	β	β/θ	$\bar{X}$	Pressurant Fractions (X) at Locations l: $l = 1$	2	3	4	5	6	7	8	9	10	11	12	13
COMMENCE VALVE OPENING																			
0.0	18.5	18.9	77.3	.9	0.0000	0.000	0.000	0.000	0.000	0.000	0.000	0.000	0.000	0.000	0.000	0.000	0.000	0.000	
1.0	20.1	20.0	20.4	106.2	1.2449	.012	.213	.129	.070	.106	.165	.225	-.134	-.014	-.134	-.134	-.074	-.134	-.134
VALVE FULLY OPEN																			
2.0	23.3	23.2	25.2	33.7	1.4809	.054	1.308	.962	.764	.271	.715	1.011	-.865	-.618	-.618	-.865	-.124	-.618	-.618
3.0	27.0	27.7	20.3	-4.4	-.1564	.087	-.220	-.166	-.139	-.099	-.180	-.193	.641	.372	.237	.237	.036	.237	.372
4.0	29.6	31.1	18.5	1.4	.0473	.118	-.062	-.031	-.007	-.015	-.055	-.070	.292	.292	.253	.214	.174	.253	.292
5.0	31.4	33.9	16.6	4.3	.1395	.146	.059	.053	.030	.042	.030	.030	.232	.232	.290	.232	.213	.232	.232
6.0	33.2	36.7	16.3	2.0	.0613	.172	.151	.126	.121	.102	.056	.082	.258	.209	.234	.234	.185	.209	.258
7.0	34.5	39.1	15.2	3.7	.1045	.195	.184	.196	.192	.151	.096	.171	.217	.217	.217	.217	.196	.217	.259
8.0	35.4	40.7	15.3	1.9	.0334	.209	.191	.191	.167	.167	.151	.167	.226	.226	.226	.265	.206	.265	.265
9.0	36.8	43.2	14.9	.6	.0156	.226	.190	.204	.190	.194	.183	.180	.222	.240	.257	.257	.222	.310	.310
10.0	37.2	44.8	14.0	6.1	.1587	.240	.252	.255	.265	.268	.265	.275	.199	.228	.243	.223	.207	.288	.288
11.0	37.5	46.2	13.7	5.7	.1395	.266	.304	.297	.288	.276	.257	.233	.208	.223	.239	.254	.270	.300	.316
12.0	37.8	47.2	13.7	6.2	.1386	.282	.319	.316	.274	.295	.269	.298	.188	.248	.277	.248	.262	.337	.337
13.0	38.9	49.4	13.8	-.7	-.0142	.296	.363	.374	.332	.326	.292	.304	.183	.225	.281	.281	.253	.323	.309
14.0	39.7	51.2	14.0	1.0	.0184	.309	.355	.355	.347	.347	.325	.331	.197	.223	.331	.304	.290	.304	.301
15.0	40.3	52.7	14.1	2.3	.0421	.322	.309	.327	.324	.363	.371	.371	.190	.215	.319	.319	.332	.371	.371
16.0	39.7	52.7	14.1	9.2	.1955	.336	.393	.406	.390	.372	.380	.357	.123	.201	.305	.331	.318	.383	.409
17.0	40.0	53.5	14.2	2.3	.0251	.343	.414	.407	.397	.381	.341	.315	.142	.244	.320	.320	.333	.422	.422
18.0	40.7	55.1	14.3	.4	.0065	.353	.409	.406	.424	.375	.343	.348	.176	.225	.348	.346	.348	.421	.421
19.0	41.1	56.3	14.4	2.4	.0377	.363	.445	.426	.412	.414	.424	.426	.199	.199	.343	.367	.331	.367	.367
20.0	40.5	56.2	14.4	9.5	.1555	.375	.415	.410	.386	.408	.422	.423	.185	.269	.377	.377	.377	.401	.413
21.0	39.5	55.3	14.4	11.7	.2137	.386	.393	.408	.410	.415	.425	.420	.205	.303	.376	.400	.412	.425	.425
22.0	39.6	55.9	14.4	5.0	.0732	.395	.422	.420	.420	.422	.417	.427	.205	.302	.386	.410	.410	.446	.446
23.0	39.0	55.7	14.4	9.7	.1529	.404	.464	.445	.450	.435	.450	.450	.188	.309	.382	.406	.394	.454	.439
24.0	39.4	56.6	14.5	-1.6	-.0120	.409	.449	.439	.446	.442	.449	.444	.239	.325	.420	.420	.408	.420	.420
25.0	39.3	57.0	14.5	6.1	.0832	.417	.487	.477	.470	.465	.482	.496	.237	.296	.402	.402	.390	.413	.402
26.0	39.8	58.3	14.6	-1.4	-.0146	.423	.499	.506	.508	.480	.483	.501	.261	.283	.398	.398	.364	.398	.421
27.0	39.8	58.7	14.7	5.4	.0676	.430	.492	.497	.488	.497	.493	.494	.279	.279	.392	.415	.404	.426	.439
COMMENCE VALVE CLOSURE																			
28.0	39.9	59.5	14.7	2.5	.0280	.436	.470	.472	.468	.484	.481	.497	.280	.325	.414	.437	.426	.437	.481
29.0	40.1	60.0	14.7	1.6	.0189	.441	.474	.463	.466	.479	.466	.463	.289	.333	.444	.444	.455	.466	.488
VALVE FULLY CLOSED																			
30.0	39.2	59.2	14.6	13.5	.1587	.448	.478	.478	.472	.467	.476	.512	.297	.319	.431	.442	.454	.487	.510
31.0	41.6	63.3	14.8	-23.9	-.2818	.448	.472	.467	.457	.474	.507	.503	.278	.360	.422	.443	.453	.484	.500
32.0	42.9	65.5	15.0	-11.7	-.1380	.448	.461	.457	.463	.479	.476	.494	.310	.376	.429	.449	.439	.479	.479
33.0	43.5	66.6	15.1	-5.6	-.0664	.448	.464	.462	.458	.470	.481	.487	.300	.390	.439	.439	.440	.458	.458
34.0	43.9	67.1	15.2	-2.8	-.0326	.448	.471	.467	.459	.469	.478	.486	.292	.382	.430	.421	.450	.469	.450
35.0	44.0	67.4	15.2	-1.4	-.0161	.448	.474	.470	.464	.470	.474	.480	.380	.388	.426	.426	.436	.464	.464
36.0	44.2	67.7	15.2	-1.4	-.0160	.448	.475	.469	.463	.469	.473	.477	.383	.393	.421	.440	.431	.460	.479
37.0	44.2	67.7	15.2	0.0	0.0000	.448	.476	.474	.462	.468	.474	.478	.388	.386	.445	.436	.436	.455	.455
38.0	44.0	67.4	15.2	1.4	.0160	.448	.465	.461	.456	.459	.469	.471	.406	.406	.444	.444	.435	.444	.463
39.0	43.9	67.1	15.2	1.4	.0161	.448	.472	.462	.454	.464	.468	.475	.402	.383	.450	.450	.431	.450	.460
40.0	43.9	67.1	15.2	0.0	0.0000	.448	.464	.462	.456	.458	.462	.469	.396	.377	.473	.454	.444	.454	.454
41.0	43.7	66.9	15.1	1.4	.0162	.448	.466	.459	.453	.455	.460	.470	.399	.379	.466	.466	.437	.457	.457
42.0	43.5	66.6	15.1	1.4	.0163	.448	.453	.453	.443	.445	.453	.463	.418	.379	.476	.457	.447	.476	.457
43.0	43.5	66.6	15.1	0.0	0.0000	.448	.448	.446	.436	.438	.450	.460	.409	.390	.467	.467	.458	.487	.467
44.0	43.4	66.3	15.1	1.4	.0164	.448	.450	.441	.433	.435	.447	.460	.413	.384	.472	.472	.462	.492	.462
45.0	43.2	66.0	15.1	1.4	.0165	.448	.445	.437	.430	.431	.439	.451	.418	.398	.477	.477	.467	.496	.457
46.0	43.2	66.0	15.1	0.0	0.0000	.448	.446	.436	.432	.440	.442	.451	.416	.396	.475	.475	.465	.495	.455
47.0	43.0	65.8	15.1	1.4	.0167	.448	.447	.439	.445	.445	.449	.455	.411	.392	.471	.471	.461	.491	.471
48.0	43.0	65.8	15.1	0.0	0.0000	.448	.451	.443	.449	.445	.449	.455	.405	.405	.464	.464	.455	.484	.455
49.0	42.9	65.5	15.0	1.4	.0168	.448	.449	.443	.449	.443	.449	.453	.415	.396	.475	.455	.445	.495	.455
50.0	42.9	65.5	15.0	0.0	0.0000	.448	.454	.450	.450	.454	.454	.456	.411	.391	.470	.450	.440	.490	.450

Table 20B — Inferred Pressurant Distribution, Scaling Run 248; South 3.279-cm Nozzle

t (s)	$\bar{T}$ (°C)	$\bar{T}_a$ (°C)	$\bar{T}_p$ (°C)	β	β/θ	$\bar{X}$	Pressurant Fractions (X) at Locations l: 1	2	3	4	5	6	7	8	9	10	11	12	13
CONMENCE VALVE OPENING																			
0.0	22.7	22.7	49.6	.9	0.0000	0.000	0.000	0.000	0.000	0.000	0.000	0.000	0.000	0.000	0.000	0.000	0.000	0.000	
1.0	26.2	25.9	39.9	-66.0	-1.5370	.018	.246	.246	.203	.217	.266	.260	-.198	-.163	-.163	-.163	-.163	-.198	-.163
VALVE FULLY OPEN																			
2.0	29.2	29.9	33.2	14.8	.6401	.059	.575	.621	.645	.575	.691	.621	-.756	-.756	-.289	-.289	-.056	-.522	-.289
3.0	31.4	31.4	31.3	10.6	.4209	.096	-10.601	-10.69	-13.29	-11.27	-15.97	-14.6321	.64314	.926	8.208	4.850	4.85014	.926	8.208
4.0	33.8	34.5	29.3	2.0	.0656	.126	-.250	-.231	-.269	-.231	-.307	-.250	.727	.535	.344	.344	.344	.535	.344
5.0	35.6	36.9	28.3	3.9	.1251	.153	.019	.042	-.004	.042	.042	.030	.376	.376	.203	.146	.146	.433	.146
6.0	37.6	39.7	27.9	.5	.0133	.178	.151	.142	.151	.117	.100	.134	.337	.337	.253	.166	.083	.253	.083
7.0	39.2	42.2	27.1	1.0	.0277	.199	.244	.218	.211	.192	.158	.178	.264	.264	.198	.165	.132	.198	.165
8.0	40.3	44.1	26.8	3.1	.0842	.221	.286	.240	.182	.171	.159	.200	.257	.315	.257	.209	.290	.200	.209
9.0	40.9	45.4	26.3	3.9	.0667	.234	.287	.251	.214	.209	.193	.219	.246	.246	.246	.246	.193	.298	.193
10.0	41.4	46.7	25.9	5.3	.1320	.253	.293	.269	.250	.250	.226	.245	.264	.216	.216	.216	.264	.312	.264
11.0	42.0	48.2	25.4	4.4	.1060	.270	.306	.258	.263	.276	.311	.328	.197	.197	.241	.241	.241	.328	.328
12.0	42.1	49.1	24.9	6.5	.1473	.287	.314	.331	.318	.306	.316	.310	.244	.244	.264	.244	.223	.326	.280
13.0	42.6	50.3	24.7	4.5	.0956	.302	.367	.348	.324	.321	.309	.328	.219	.258	.297	.258	.258	.336	.297
14.0	42.3	50.7	24.2	8.2	.1767	.316	.349	.345	.356	.352	.341	.360	.209	.247	.266	.266	.303	.379	.341
15.0	42.8	52.1	23.7	3.8	.0728	.329	.378	.357	.374	.385	.413	.367	.192	.262	.262	.262	.297	.402	.332
16.0	43.1	53.2	23.2	2.4	.0269	.337	.362	.352	.345	.358	.345	.372	.218	.318	.285	.318	.352	.385	.352
17.0	43.8	54.9	23.2	.8	.0133	.348	.422	.356	.339	.352	.358	.35[illegible]	.257	.305	.324	.357	.352	.400	.357
18.0	43.5	55.2	22.7	7.9	.1478	.360	.403	.391	.385	.394	.472	.400	.231	.292	.261	.354	.354	.415	.385
19.0	43.1	55.2	22.7	8.3	.1416	.371	.422	.416	.419	.443	.468	.446	.185	.247	.308	.339	.370	.400	.354
20.0	43.7	57.0	22.0	1.0	.0135	.379	.457	.460	.449	.483	.497	.497	.189	.237	.294	.323	.351	.380	.323
21.0	43.8	57.8	21.8	4.6	.0668	.388	.459	.459	.459	.467	.472	.461	.226	.281	.337	.351	.364	.364	.351
22.0	44.2	59.3	21.3	1.7	.0225	.397	.453	.437	.429	.453	.455	.448	.279	.332	.358	.385	.358	.385	.385
23.0	43.5	58.7	21.2	12.0	.1411	.404	.434	.437	.429	.442	.464	.456	.293	.320	.373	.347	.400	.426	.426
24.0	43.9	60.0	20.7	1.8	.0216	.411	.472	.469	.408	.447	.457	.482	.327	.340	.378	.378	.378	.416	.391
25.0	43.5	60.4	20.2	8.1	.1123	.419	.484	.467	.460	.455	.472	.479	.365	.340	.365	.390	.390	.390	.390
26.0	43.8	61.4	20.0	1.8	.0212	.426	.496	.487	.467	.465	.470	.474	.356	.356	.368	.392	.368	.405	.429
27.0	43.1	61.3	19.4	10.6	.1481	.434	.492	.492	.487	.490	.499	.497	.349	.349	.397	.397	.373	.397	.420
28.0	42.8	61.0	19.5	10.1	.0864	.438	.546	.520	.498	.496	.488	.479	.320	.344	.392	.392	.368	.416	.440
CONMENCE VALVE CLOSURE																			
29.0	43.1	62.2	19.3	.6	.0056	.444	.536	.501	.473	.480	.470	.473	.326	.361	.407	.407	.419	.454	.466
30.0	42.8	62.7	18.6	4.7	.0845	.450	.538	.529	.493	.499	.502	.502	.318	.364	.409	.409	.409	.454	.432
VALVE FULLY CLOSED																			
31.0	42.1	62.1	18.3	6.8	.1220	.456	.524	.519	.508	.524	.506	.515	.330	.376	.398	.410	.410	.467	.444
32.0	44.1	65.5	18.5	-13.2	-.2371	.456	.516	.516	.499	.503	.522	.535	.339	.382	.403	.425	.425	.446	.425
33.0	45.1	67.2	18.7	-6.1	-.1107	.456	.501	.501	.491	.499	.507	.526	.334	.386	.427	.437	.437	.447	.437
34.0	45.5	68.0	18.7	-3.0	-.0536	.456	.502	.500	.488	.492	.496	.506	.331	.392	.433	.433	.453	.453	.453
35.0	45.7	68.3	18.7	-1.0	-.0176	.456	.511	.497	.486	.501	.501	.503	.361	.382	.422	.422	.442	.462	.442
36.0	45.9	68.6	18.8	-1.0	-.0175	.456	.505	.495	.489	.499	.497	.495	.354	.384	.425	.435	.435	.465	.455
37.0	45.9	68.6	18.6	0.0	0.0000	.456	.514	.502	.494	.488	.484	.480	.361	.401	.442	.421	.442	.462	.442
38.0	45.7	68.3	18.7	1.0	.0175	.456	.513	.503	.485	.473	.479	.481	.378	.398	.438	.436	.438	.459	.448
39.0	45.7	68.3	18.7	0.0	0.0000	.456	.501	.493	.472	.473	.477	.479	.390	.390	.431	.451	.451	.471	.451
40.0	45.5	68.0	18.7	1.0	.0176	.456	.500	.488	.478	.474	.484	.482	.389	.389	.429	.449	.449	.470	.449
41.0	45.4	67.8	18.7	1.0	.0177	.456	.495	.487	.481	.470	.479	.477	.401	.411	.442	.442	.442	.462	.442
42.0	45.4	67.8	18.7	0.0	0.0000	.456	.489	.483	.475	.475	.485	.493	.395	.416	.436	.436	.436	.456	.456
43.0	45.2	67.5	18.7	1.0	.0179	.456	.488	.482	.470	.472	.488	.502	.392	.412	.433	.433	.443	.463	.453
44.0	45.1	66.3	19.7	1.0	.0180	.456	.490	.479	.472	.474	.483	.492	.404	.425	.425	.425	.447	.468	.447
45.0	45.1	65.7	20.5	0.0	0.0000	.456	.490	.479	.483	.474	.483	.501	.408	.419	.430	.430	.430	.463	.441
46.0	44.9	64.9	21.0	1.0	.0181	.456	.489	.478	.471	.480	.485	.492	.408	.430	.453	.430	.430	.453	.430
47.0	44.9	64.4	21.6	0.0	0.0000	.456	.492	.480	.466	.478	.485	.487	.424	.424	.448	.424	.424	.448	.448
48.0	44.7	63.7	22.2	1.0	.0183	.456	.493	.483	.474	.488	.491	.488	.418	.418	.442	.418	.418	.455	.442
49.0	44.7	63.2	22.7	0.0	0.0000	.456	.495	.483	.475	.492	.495	.500	.406	.431	.431	.406	.431	.455	.431
50.0	44.6	62.5	23.2	1.0	.0184	.456	.498	.488	.483	.496	.496	.514	.397	.422	.435	.409	.422	.448	.422

C-Tables

Each of the four sets of experiments has a C-table. These tables give mean values for replicate runs in each set. Otherwise, they are similar to the B-tables, with two exceptions: Dimensionless time τ is added in the last column of the table, and all values in the table have been extrapolated to correspond to equal τ-increments of 0.05 (see Appendix C for program).

Set 1, Table C — Mean Values of All Quantities, Scaling Runs 230-236

MEAN VALUES OF ALL QUANTITIES

t (s)	$\bar{T}$ (°C)	$\bar{T}_e$ (°C)	$\bar{T}_p$ (°C)	β	β/θ	$\bar{X}$	MEAN PRESSURANT FRACTIONS AT LOCATIONS I 1	2	3	4	5	6	7	8	9	10	11	12	13	TAU
0.0	12.5	12.5	27.4	1.6	0.0000	0.000	0.000	0.000	0.000	0.000	0.000	0.000	0.000	0.000	0.000	0.000	0.000	0.000	0.000	0.00
.4	14.6	14.9	18.1	5.5	.2499	.023	-.104	-.053	.022	-.008	-.057	-.055	.124	.054	.046	.089	.046	.104	.085	.05
.8	16.6	17.2	9.1	9.2	.4092	.046	-.196	-.098	.042	-.012	-.106	-.102	.239	.103	.091	.172	.093	.201	.164	.10
1.1	18.2	19.4	5.0	9.0	.5521	.069	-.140	-.061	.054	.011	-.070	-.061	.243	.122	.115	.188	.108	.208	.173	.15
1.4	19.7	21.5	3.3	7.6	.5315	.091	-.065	-.012	.063	.038	-.017	.003	.227	.142	.134	.190	.121	.194	.168	.20
1.6	21.1	23.7	2.4	5.9	.4725	.114	.010	.038	.073	.065	.036	.067	.209	.161	.153	.193	.134	.180	.164	.25
1.9	22.4	25.8	1.7	4.6	.4163	.137	.074	.081	.087	.093	.084	.123	.198	.182	.171	.199	.150	.172	.164	.30
2.3	23.7	28.0	1.5	4.0	.3621	.159	.106	.109	.109	.120	.116	.155	.212	.203	.192	.214	.173	.185	.179	.35
2.7	25.0	30.3	1.5	3.4	.2945	.182	.137	.135	.130	.148	.145	.182	.229	.223	.214	.230	.197	.203	.197	.40
3.1	26.0	32.4	1.5	3.5	.2786	.205	.167	.164	.155	.175	.174	.209	.245	.242	.235	.244	.220	.222	.216	.45
3.5	27.0	34.5	1.6	3.8	.2842	.228	.198	.196	.183	.200	.202	.233	.256	.256	.253	.259	.241	.246	.241	.50
3.9	27.9	36.7	1.6	4.0	.2848	.251	.230	.226	.212	.226	.230	.257	.268	.270	.270	.275	.261	.270	.263	.55
4.4	28.7	39.0	1.6	3.7	.2460	.274	.262	.257	.243	.254	.261	.286	.281	.284	.285	.293	.283	.290	.279	.60
5.0	29.6	41.4	1.5	3.4	.1954	.297	.293	.287	.274	.285	.293	.316	.291	.302	.302	.308	.303	.307	.293	.65
5.6	30.1	43.5	1.4	3.7	.1992	.319	.319	.314	.302	.315	.324	.344	.309	.323	.324	.323	.319	.321	.312	.70
6.3	30.5	45.6	1.4	4.1	.2024	.342	.345	.339	.326	.340	.349	.370	.332	.343	.345	.343	.342	.343	.331	.75
7.1	30.8	47.6	1.4	4.1	.1859	.365	.372	.366	.347	.362	.372	.393	.354	.362	.364	.367	.365	.366	.351	.80
8.0	30.8	49.4	1.6	4.3	.1784	.387	.399	.392	.370	.382	.393	.414	.375	.387	.392	.391	.392	.364	.366	.85
9.0	30.9	51.3	1.6	4.0	.1472	.410	.418	.414	.400	.409	.419	.440	.393	.414	.409	.408	.411	.408	.391	.90
10.2	30.7	53.0	1.5	3.6	.1428	.433	.445	.438	.419	.429	.442	.463	.421	.437	.436	.427	.432	.429	.413	.95
11.9	29.6	54.6	-.1	1.2	.0757	.456	.474	.462	.443	.455	.469	.487	.445	.454	.456	.451	.446	.449	.437	1.00
13.1	30.7	56.7	-.4	-1.8	-.1098	.456	.476	.468	.450	.461	.474	.493	.444	.448	.448	.444	.445	.443	.436	1.05
14.4	30.4	56.2	-.3	.6	.0331	.456	.477	.472	.456	.464	.479	.493	.441	.448	.447	.440	.442	.438	.432	1.10
15.7	30.1	55.5	-.2	.6	.0341	.456	.478	.470	.457	.465	.481	.496	.445	.446	.446	.441	.438	.435	.432	1.15
16.9	29.8	55.0	-.1	.6	.0342	.456	.483	.475	.459	.470	.482	.495	.442	.446	.441	.435	.437	.431	.433	1.20
18.2	29.6	54.4	-.1	.5	.0321	.456	.484	.477	.461	.469	.481	.496	.441	.443	.442	.434	.438	.433	.433	1.25
19.4	29.3	53.9	.0	.5	.0296	.456	.484	.475	.461	.469	.478	.494	.438	.442	.442	.438	.436	.437	.437	1.30
20.7	29.1	53.4	.1	.4	.0256	.456	.484	.474	.458	.468	.478	.493	.437	.443	.442	.436	.439	.437	.442	1.35
22.0	28.9	53.0	.2	.4	.0236	.456	.484	.475	.457	.467	.479	.495	.441	.445	.438	.433	.438	.437	.440	1.40
23.2	28.7	52.6	.2	.4	.0239	.456	.483	.474	.457	.467	.476	.493	.441	.445	.445	.436	.436	.439	.437	1.45
24.5	28.5	52.3	.3	.3	.0199	.456	.480	.471	.455	.465	.474	.494	.443	.447	.445	.436	.438	.441	.440	1.50
25.7	28.3	51.9	.3	.4	.0234	.456	.479	.469	.455	.464	.474	.492	.441	.449	.446	.437	.441	.442	.439	1.55
27.0	28.2	51.6	.3	.3	.0183	.456	.478	.468	.453	.465	.476	.493	.444	.447	.447	.440	.439	.442	.437	1.60
28.3	28.1	51.3	.4	.3	.0189	.456	.478	.469	.455	.466	.478	.493	.444	.449	.449	.437	.438	.441	.435	1.65
29.5	27.9	50.9	.5	.4	.0221	.456	.479	.470	.455	.465	.479	.495	.444	.448	.446	.437	.436	.442	.434	1.70
30.8	27.8	50.4	.8	.2	.0116	.456	.481	.470	.455	.467	.482	.500	.443	.446	.440	.433	.438	.440	.435	1.75
27.1	23.6	42.9	1.0	.3	.0159	.394	.410	.403	.394	.402	.412	.426	.384	.382	.382	.378	.382	.382	.380	1.80
28.2	23.5	42.4	1.3	.2	.0132	.394	.411	.405	.395	.403	.412	.426	.384	.382	.381	.377	.379	.384	.381	1.85
14.5	11.8	21.3	.6	.1	.0081	.197	.205	.204	.199	.205	.209	.214	.190	.190	.189	.186	.189	.192	.189	1.90
0.0	0.0	0.0	0.0	0.0	0.0000	0.000	0.000	0.000	0.000	0.000	0.000	0.000	0.000	0.000	0.000	0.000	0.000	0.000	0.000	1.95
0.0	0.0	0.0	0.0	0.0	0.0000	0.000	0.000	0.000	0.000	0.000	0.000	0.000	0.000	0.000	0.000	0.000	0.000	0.000	0.000	2.00
0.0	0.0	0.0	0.0	0.0	0.0000	0.000	0.000	0.000	0.000	0.000	0.000	0.000	0.000	0.000	0.000	0.000	0.000	0.000	0.000	2.05
0.0	0.0	0.0	0.0	0.0	0.0000	0.000	0.000	0.000	0.000	0.000	0.000	0.000	0.000	0.000	0.000	0.000	0.000	0.000	0.000	2.10
0.0	0.0	0.0	0.0	0.0	0.0000	0.000	0.000	0.000	0.000	0.000	0.000	0.000	0.000	0.000	0.000	0.000	0.000	0.000	0.000	2.15
0.0	0.0	0.0	0.0	0.0	0.0000	0.000	0.000	0.000	0.000	0.000	0.000	0.000	0.000	0.000	0.000	0.000	0.000	0.000	0.000	2.20
0.0	0.0	0.0	0.0	0.0	0.0000	0.000	0.000	0.000	0.000	0.000	0.000	0.000	0.000	0.000	0.000	0.000	0.000	0.000	0.000	2.25
0.0	0.0	0.0	0.0	0.0	0.0000	0.000	0.000	0.000	0.000	0.000	0.000	0.000	0.000	0.000	0.000	0.000	0.000	0.000	0.000	2.30
0.0	0.0	0.0	0.0	0.0	0.0000	0.000	0.000	0.000	0.000	0.000	0.000	0.000	0.000	0.000	0.000	0.000	0.000	0.000	0.000	2.35
0.0	0.0	0.0	0.0	0.0	0.0000	0.000	0.000	0.000	0.000	0.000	0.000	0.000	0.000	0.000	0.000	0.000	0.000	0.000	0.000	2.40
0.0	0.0	0.0	0.0	0.0	0.0000	0.000	0.000	0.000	0.000	0.000	0.000	0.000	0.000	0.000	0.000	0.000	0.000	0.000	0.000	2.45

Set 2, Table C — Mean Values of All Quantities, Scaling Runs 237-240

MEAN VALUES OF ALL QUANTITIES

t (s)	$\bar{T}$ (°C)	$\bar{T}_s$ (°C)	$\bar{T}_p$ (°C)	β	β/θ	$\bar{X}$	MEAN PRESSURANT FRACTIONS AT LOCATIONS I 1	2	3	4	5	6	7	8	9	10	11	12	13	TAU
0.0	17.7	17.7	30.8	.8	0.0000	0.000	0.000	0.000	0.000	0.000	0.000	0.000	0.000	0.000	0.000	0.000	0.000	0.000	0.000	0.00
1.0	19.7	19.6	27.8	65.7	1.9414	.023	.364	.242	-.006	.119	.252	.380	-.138	-.090	-.202	-.196	-.109	-.162	-.140	.05
1.6	22.1	22.0	24.7	40.1	1.0014	.045	-.797	-.766	-.738	-.625	-.861	-1.006	.814	.640	.697	.725	.536	.969	.798	.10
2.3	24.2	24.5	22.2	3.9	.1489	.068	-1.079	-.987	-.838	-.765	-1.101	-1.327	1.058	1.052	.926	.965	.700	1.250	1.026	.15
2.9	26.2	26.9	18.9	1.3	.0480	.090	-.580	-.518	-.474	-.474	-.574	-.604	.844	.614	.442	.691	.427	.765	.613	.20
3.7	27.9	29.4	16.7	1.6	.0529	.113	-.354	-.304	-.281	-.289	-.339	-.359	.666	.481	.344	.513	.336	.597	.456	.25
4.5	29.5	31.8	15.1	2.1	.0671	.135	.017	.025	.029	.021	.011	-.014	.285	.244	.201	.213	.192	.317	.219	.30
5.3	31.1	34.2	14.3	1.5	.0495	.158	.108	.089	.092	.091	.074	.063	.201	.209	.224	.217	.199	.281	.206	.35
6.3	32.6	36.8	13.6	1.2	.0354	.180	.170	.153	.153	.156	.143	.126	.191	.192	.201	.196	.180	.263	.225	.40
7.4	34.0	39.3	13.3	1.8	.0492	.203	.211	.201	.196	.195	.192	.180	.192	.198	.198	.209	.184	.231	.231	.45
8.5	35.0	41.4	13.0	3.5	.0935	.226	.246	.233	.223	.211	.212	.213	.196	.219	.224	.223	.214	.273	.244	.50
9.9	35.6	43.1	12.9	5.5	.1117	.248	.258	.257	.247	.245	.250	.251	.204	.228	.243	.41	.235	.300	.268	.55
11.2	36.4	45.2	12.8	3.1	.0730	.271	.282	.280	.275	.278	.279	.287	.208	.237	.270	.259	.257	.315	.290	.60
12.7	36.8	46.8	12.9	5.8	.1337	.293	.314	.303	.299	.308	.318	.328	.203	.257	.284	.284	.274	.334	.310	.65
14.3	37.4	48.6	12.8	4.0	.0767	.316	.345	.345	.339	.344	.342	.321	.236	.262	.304	.305	.301	.341	.323	.70
16.2	37.6	50.2	12.9	4.4	.0814	.338	.375	.363	.358	.346	.345	.343	.256	.274	.333	.344	.325	.383	.352	.75
18.3	37.7	51.7	12.8	5.4	.0884	.361	.395	.390	.381	.371	.381	.370	.265	.292	.357	.349	.346	.410	.381	.80
20.6	37.4	52.7	12.8	6.9	.1112	.383	.409	.411	.407	.414	.418	.413	.280	.319	.365	.369	.363	.418	.401	.85
23.4	37.5	54.5	12.7	5.6	.0846	.406	.439	.431	.421	.419	.409	.403	.306	.358	.408	.405	.409	.443	.427	.90
26.6	37.2	55.6	12.6	7.5	.0986	.428	.451	.447	.440	.442	.443	.449	.336	.360	.430	.424	.424	.473	.453	.95
30.3	36.3	56.5	11.7	2.2	.0462	.451	.494	.486	.474	.482	.486	.486	.374	.376	.443	.432	.427	.458	.444	1.00
34.3	39.9	62.8	12.0	-1.4	-.0306	.451	.483	.475	.466	.461	.465	.470	.382	.402	.450	.445	.443	.471	.450	1.05
38.4	39.9	62.9	12.0	.3	.0081	.451	.464	.459	.457	.459	.465	.463	.393	.404	.457	.452	.449	.478	.460	1.10
42.5	39.5	61.8	12.2	.5	.0114	.451	.462	.458	.458	.463	.465	.473	.398	.405	.451	.453	.453	.475	.450	1.15
46.5	39.1	60.5	13.1	.5	.0126	.451	.463	.460	.455	.461	.463	.477	.411	.411	.449	.7	.445	.475	.444	1.20
50.6	38.8	59.5	13.7	.3	.0067	.451	.466	.464	.460	.465	.461	.466	.411	.422	.439	.433	.445	.478	.451	1.25
54.7	38.5	58.6	14.1	.5	.0106	.451	.467	.464	.461	.469	.462	.464	.410	.423	.436	.439	.441	.487	.436	1.30
58.7	38.3	57.9	14.4	.2	.0049	.451	.469	.464	.460	.461	.457	.463	.414	.439	.438	.442	.438	.483	.437	1.35
62.7	38.1	57.3	14.6	.3	.0060	.451	.466	.463	.456	.464	.464	.467	.417	.425	.434	.440	.444	.484	.436	1.40
66.8	37.8	56.7	14.9	.5	.0103	.451	.467	.464	.462	.468	.467	.473	.413	.418	.434	.436	.444	.477	.439	1.45
70.9	37.7	56.3	15.0	.3	.0065	.451	.467	.464	.460	.466	.464	.472	.420	.436	.425	.436	.446	.465	.439	1.50
75.0	37.5	56.0	15.1	.0	.0007	.451	.458	.453	.450	.459	.461	.463	.437	.441	.429	.432	.452	.484	.442	1.55
79.0	37.3	55.5	15.1	.6	.0112	.451	.453	.458	.452	.461	.453	.459	.433	.439	.428	.445	.450	.493	.439	1.60
83.1	37.1	55.2	15.1	.3	.0065	.451	.456	.456	.450	.458	.452	.458	.437	.445	.439	.439	.439	.495	.438	1.65
87.2	37.0	54.9	15.1	.2	.0045	.451	.453	.453	.453	.458	.455	.457	.445	.450	.439	.440	.444	.487	.431	1.70
91.2	36.8	54.6	15.1	.5	.0094	.451	.454	.454	.448	.459	.453	.459	.441	.447	.447	.447	.447	.477	.429	1.75
44.8	18.0	28.4	5.4	.3	.0061	.226	.226	.228	.228	.229	.226	.227	.226	.226	.226	.223	.221	.229	.226	1.80
46.7	18.0	28.4	5.4	.1	.0029	.226	.225	.227	.226	.229	.223	.225	.223	.223	.223	.229	.226	.240	.223	1.85
48.5	17.9	28.2	5.4	0.0	0.0000	.226	.224	.225	.227	.229	.224	.225	.222	.222	.222	.228	.228	.242	.222	1.90
24.7	9.2	14.4	3.0	0.0	0.0000	.113	.112	.112	.113	.114	.114	.115	.112	.112	.112	.112	.112	.118	.112	1.95
0.0	0.0	0.0	0.0	0.0	0.0000	0.000	0.000	0.000	0.000	0.000	0.000	0.000	0.000	0.000	0.000	0.000	0.000	0.000	0.000	2.00
0.0	0.0	0.0	0.0	0.0	0.0000	0.000	0.000	0.000	0.000	0.000	0.000	0.000	0.000	0.000	0.000	0.000	0.000	0.000	0.000	2.05
0.0	0.0	0.0	0.0	0.0	0.0000	0.000	0.000	0.000	0.000	0.000	0.000	0.000	0.000	0.000	0.000	0.000	0.000	0.000	0.000	2.10
0.0	0.0	0.0	0.0	0.0	0.0000	0.000	0.000	0.000	0.000	0.000	0.000	0.000	0.000	0.000	0.000	0.000	0.000	0.000	0.000	2.15
0.0	0.0	0.0	0.0	0.0	0.0000	0.000	0.000	0.000	0.000	0.000	0.000	0.000	0.000	0.000	0.000	0.000	0.000	0.000	0.000	2.20
0.0	0.0	0.0	0.0	0.0	0.0000	0.000	0.000	0.000	0.000	0.000	0.000	0.000	0.000	0.000	0.000	0.000	0.000	0.000	0.000	2.25
0.0	0.0	0.0	0.0	0.0	0.0000	0.000	0.000	0.000	0.000	0.000	0.000	0.000	0.000	0.000	0.000	0.000	0.000	0.000	0.000	2.30
0.0	0.0	0.0	0.0	0.0	0.0000	0.000	0.000	0.000	0.000	0.000	0.000	0.000	0.000	0.000	0.000	0.000	0.000	0.000	0.000	2.35
0.0	0.0	0.0	0.0	0.0	0.0000	0.000	0.000	0.000	0.000	0.000	0.000	0.000	0.000	0.000	0.000	0.000	0.000	0.000	0.000	2.40
0.0	0.0	0.0	0.0	0.0	0.0000	0.000	0.000	0.000	0.000	0.000	0.000	0.000	0.000	0.000	0.000	0.000	0.000	0.000	0.000	2.45

Set 3, Table C — Mean Values of All Quantities, Scaling Runs 241-244

MEAN VALUES OF ALL QUANTITIES

t (s)	$\bar{T}$ (°C)	$\bar{T}_e$ (°C)	$\bar{T}_p$ (°C)	β	β/θ	$\bar{X}$	MEAN PRESSURANT FRACTIONS AT LOCATIONS I 1	2	3	4	5	6	7	8	9	10	11	12	13	TAU
0.0	5.9	5.9	35.8	2.1	0.0000	0.000	0.000	0.000	0.000	0.000	0.000	0.000	0.000	0.000	0.000	0.000	0.000	0.000	0.000	0.00
.5	7.2	7.6	17.1	27.2	1.3294	.023	-.118	-.021	.272	.001	-.075	-.075	.007	-.040	-.044	-.014	.015	.319	.071	.05
.9	8.4	9.2	-.1	48.9	2.5245	.046	-.217	-.038	.514	.004	-.136	-.136	.016	-.071	-.080	-.023	.030	.597	.137	.10
1.1	9.6	11.0	-4.5	43.6	2.4937	.069	-.184	-.020	.535	.021	-.108	-.104	.032	-.047	-.057	-.005	.040	.633	.161	.15
1.4	10.7	12.8	-7.3	35.0	2.3039	.092	-.136	.003	.527	.040	-.070	-.062	.047	-.017	-.027	.016	.048	.649	.176	.20
1.6	11.9	14.6	-8.1	23.7	1.8117	.115	-.085	.026	.516	.063	-.031	-.020	.063	.016	.004	.039	.060	.650	.196	.25
1.9	13.0	16.4	-8.3	13.7	1.3012	.138	-.049	.050	.510	.086	.007	.024	.078	.048	.033	.060	.074	.659	.213	.30
2.3	13.9	18.1	-7.7	11.1	1.0137	.161	-.026	.076	.526	.112	.041	.062	.090	.072	.053	.075	.100	.685	.225	.35
2.6	14.8	19.8	-7.1	9.4	.8071	.184	.000	.105	.541	.134	.075	.101	.102	.096	.072	.089	.125	.713	.234	.40
3.0	15.7	21.5	-6.5	8.5	.6858	.207	.030	.140	.560	.152	.105	.134	.115	.118	.089	.103	.162	.741	.236	.45
3.4	16.6	23.2	-5.8	7.8	.5899	.230	.066	.190	.589	.166	.133	.166	.129	.138	.105	.117	.179	.766	.241	.50
3.8	17.3	25.0	-5.3	7.1	.4947	.253	.099	.234	.618	.185	.162	.196	.145	.157	.128	.137	.187	.787	.250	.55
4.4	18.1	26.8	-4.9	6.3	.4047	.276	.131	.244	.649	.212	.200	.228	.165	.183	.152	.159	.204	.799	.261	.60
4.9	18.7	28.6	-4.5	6.1	.3588	.299	.161	.249	.678	.237	.233	.260	.191	.210	.173	.179	.227	.813	.277	.65
5.6	19.1	30.2	-4.2	6.2	.3438	.322	.191	.266	.698	.251	.253	.280	.219	.230	.199	.201	.253	.821	.322	.70
6.2	19.4	31.7	-4.0	6.3	.3225	.345	.222	.289	.714	.264	.270	.294	.255	.256	.226	.226	.287	.832	.346	.75
7.0	19.5	33.2	-3.8	6.3	.2894	.368	.255	.308	.732	.284	.283	.308	.290	.289	.260	.253	.326	.847	.350	.80
7.9	19.8	34.5	-3.7	5.4	.2226	.391	.287	.348	.742	.305	.319	.362	.308	.307	.284	.274	.340	.859	.348	.85
9.1	19.7	36.2	-3.7	6.0	.2039	.414	.314	.367	.761	.335	.356	.391	.322	.341	.312	.314	.363	.868	.337	.90
10.5	19.6	37.7	-3.9	5.7	.1886	.437	.351	.381	.767	.360	.386	.408	.334	.366	.338	.336	.397	.867	.369	.95
12.5	19.4	41.0	-6.1	-1.3	-.0881	.460	.428	.449	.617	.414	.432	.442	.392	.407	.386	.381	.432	.751	.449	1.00
14.1	19.9	42.1	-6.2	-.7	-.0364	.460	.470	.450	.456	.429	.466	.484	.429	.445	.429	.429	.439	.598	.457	1.05
15.6	19.5	41.3	-6.1	.9	.0503	.460	.488	.455	.441	.446	.484	.503	.433	.452	.439	.434	.432	.543	.431	1.10
17.2	19.2	40.6	-6.0	.7	.0386	.460	.495	.459	.433	.451	.491	.506	.434	.450	.437	.434	.434	.539	.419	1.15
18.7	18.9	40.0	-5.8	.5	.0330	.460	.499	.460	.431	.457	.498	.511	.432	.452	.434	.427	.425	.537	.418	1.20
20.3	18.7	39.4	-5.8	.5	.0317	.460	.499	.459	.429	.457	.497	.512	.436	.454	.437	.431	.429	.524	.415	1.25
21.8	18.5	38.9	-5.7	.5	.0303	.460	.500	.459	.426	.455	.494	.509	.438	.457	.438	.432	.429	.530	.415	1.30
23.4	18.2	38.5	-5.6	.4	.0246	.460	.498	.456	.422	.451	.492	.506	.440	.459	.445	.434	.427	.528	.420	1.35
24.9	18.1	38.1	-5.5	.4	.0200	.460	.501	.460	.426	.454	.497	.510	.434	.453	.439	.434	.428	.524	.419	1.40
26.5	17.9	37.6	-5.4	.6	.0319	.460	.502	.461	.429	.456	.497	.511	.432	.450	.436	.431	.431	.528	.420	1.45
28.0	17.7	37.3	-5.3	.2	.0125	.460	.502	.458	.423	.453	.495	.511	.437	.450	.439	.428	.429	.532	.421	1.50
29.6	17.6	36.9	-5.3	.4	.0200	.460	.505	.459	.427	.458	.494	.511	.432	.455	.432	.427	.427	.531	.423	1.55
31.1	17.4	36.6	-5.2	.5	.0280	.460	.503	.460	.430	.460	.496	.508	.435	.460	.428	.422	.422	.535	.420	1.60
15.2	10.5	20.4	-1.3	.1	.0062	.228	.262	.227	.204	.230	.260	.265	.216	.230	.219	.213	.209	.222	.206	1.65
16.0	10.4	20.2	-1.2	.2	.0167	.228	.265	.227	.202	.228	.259	.266	.215	.229	.218	.212	.212	.221	.209	1.70
8.1	5.3	10.1	-.7	.1	.0069	.112	.144	.114	.075	.113	.135	.141	.105	.120	.109	.103	.097	.107	.094	1.75
8.4	5.3	10.0	-.7	.1	.0067	.112	.144	.114	.074	.113	.136	.141	.104	.119	.109	.102	.096	.112	.093	1.80
0.0	0.0	0.0	0.0	0.0	0.0000	0.000	0.000	0.000	0.000	0.000	0.000	0.000	0.000	0.000	0.000	0.000	0.000	0.000	0.000	1.85
0.0	0.0	0.0	0.0	0.0	0.0000	0.000	0.000	0.000	0.000	0.000	0.000	0.000	0.000	0.000	0.000	0.000	0.000	0.000	0.000	1.90
0.0	0.0	0.0	0.0	0.0	0.0000	0.000	0.000	0.000	0.000	0.000	0.000	0.000	0.000	0.000	0.000	0.000	0.000	0.000	0.000	1.95
0.0	0.0	0.0	0.0	0.0	0.0000	0.000	0.000	0.000	0.000	0.000	0.000	0.000	0.000	0.000	0.000	0.000	0.000	0.000	0.000	2.00
0.0	0.0	0.0	0.0	0.0	0.0000	0.000	0.000	0.000	0.000	0.000	0.000	0.000	0.000	0.000	0.000	0.000	0.000	0.000	0.000	2.05
0.0	0.0	0.0	0.0	0.0	0.0000	0.000	0.000	0.000	0.000	0.000	0.000	0.000	0.000	0.000	0.000	0.000	0.000	0.000	0.000	2.10
0.0	0.0	0.0	0.0	0.0	0.0000	0.000	0.000	0.000	0.000	0.000	0.000	0.000	0.000	0.000	0.000	0.000	0.000	0.000	0.000	2.15
0.0	0.0	0.0	0.0	0.0	0.0000	0.000	0.000	0.000	0.000	0.000	0.000	0.000	0.000	0.000	0.000	0.000	0.000	0.000	0.000	2.20
0.0	0.0	0.0	0.0	0.0	0.0000	0.000	0.000	0.000	0.000	0.000	0.000	0.000	0.000	0.000	0.000	0.000	0.000	0.000	0.000	2.25
0.0	0.0	0.0	0.0	0.0	0.0000	0.000	0.000	0.000	0.000	0.000	0.000	0.000	0.000	0.000	0.000	0.000	0.000	0.000	0.000	2.30
0.0	0.0	0.0	0.0	0.0	0.0000	0.000	0.000	0.000	0.000	0.000	0.000	0.000	0.000	0.000	0.000	0.000	0.000	0.000	0.000	2.35
0.0	0.0	0.0	0.0	0.0	0.0000	0.000	0.000	0.000	0.000	0.000	0.000	0.000	0.000	0.000	0.000	0.000	0.000	0.000	0.000	2.40
0.0	0.0	0.0	0.0	0.0	0.0000	0.000	0.000	0.000	0.000	0.000	0.000	0.000	0.000	0.000	0.000	0.000	0.000	0.000	0.000	2.45

Set 4, Table C — Mean Values of All Quantities, Scaling Runs 245-248

MEAN VALUES OF ALL QUANTITIES

t (s)	$\bar{T}$ (°C)	$\bar{T}_o$ (°C)	$\bar{T}_s$ (°C)	β	β/θ	$\bar{X}$	MEAN PRESSURANT FRACTIONS AT LOCATIONS I 1	2	3	4	5	6	7	8	9	10	11	12	13	TAU
0.0	21.0	21.0	51.8	.9	0.0000	0.000	0.000	0.000	0.000	0.000	0.000	0.000	0.000	0.000	0.000	0.000	0.000	0.000	0.000	0.00
1.1	23.6	23.4	33.2	43.8	.8498	.022	.333	.252	.160	.159	.239	.296	-.247	-.135	-.153	-.163	-.127	-.174	-.148	.05
1.7	25.5	25.4	30.5	24.6	.7239	.045	.354	.313	.322	.199	.290	.312	-.260	-.208	-.179	-.193	-.015	-.164	-.157	.10
2.3	27.6	27.6	27.8	9.7	.4189	.067	-.169	-.188	-.360	-.368	-.561	-.494	.937	.597	.305	.086	.224	.627	.242	.15
2.9	29.6	30.0	25.5	1.8	.0804	.090	-1.148	-1.207	-1.995	-1.680	-2.478	-2.235	3.539	2.423	1.355	.623	.594	2.399	.980	.20
3.7	31.4	32.4	23.9	2.3	.0852	.112	-.504	-.536	-.910	-.768	-1.138	-1.038	1.777	1.277	.734	.370	.368	1.257	.571	.25
4.5	33.0	34.7	22.5	2.4	.0782	.135	-.073	-.058	-.072	-.041	-.076	-.088	.434	.372	.247	.200	.214	.377	.318	.30
5.4	34.5	37.0	21.7	2.5	.0795	.157	.042	.064	.026	.058	.044	.052	.315	.303	.213	.176	.173	.331	.250	.35
6.3	36.0	39.3	21.2	2.1	.0660	.180	.131	.127	.137	.127	.098	.118	.268	.273	.202	.183	.155	.284	.233	.40
7.3	37.4	41.6	20.6	2.7	.0734	.202	.193	.190	.171	.168	.141	.161	.258	.260	.200	.195	.181	.256	.253	.45
8.6	38.4	43.7	20.2	3.8	.0871	.225	.234	.221	.194	.197	.194	.208	.242	.251	.228	.216	.205	.281	.248	.50
9.8	39.2	45.6	19.8	4.8	.1203	.247	.273	.262	.247	.245	.239	.244	.208	.226	.219	.222	.237	.310	.279	.55
11.1	40.1	47.7	19.5	3.3	.0828	.270	.293	.286	.281	.280	.277	.273	.181	.226	.245	.246	.256	.339	.322	.60
12.7	41.0	50.1	19.1	3.0	.0633	.292	.326	.327	.312	.315	.301	.302	.202	.248	.278	.271	.269	.336	.310	.65
14.3	41.5	51.9	19.0	5.2	.1083	.315	.342	.343	.341	.342	.344	.353	.199	.238	.288	.287	.306	.365	.344	.70
16.1	41.1	53.2	18.6	6.3	.1244	.337	.391	.381	.363	.361	.368	.363	.203	.256	.302	.318	.324	.380	.367	.75
18.3	42.1	55.4	18.5	3.8	.0610	.359	.415	.406	.399	.395	.391	.389	.229	.259	.332	.341	.340	.393	.384	.80
20.7	42.3	57.2	18.1	6.6	.1115	.382	.428	.414	.411	.425	.435	.442	.236	.285	.350	.363	.380	.403	.394	.85
23.4	41.9	58.3	17.7	6.0	.0825	.404	.470	.460	.441	.449	.459	.467	.253	.295	.366	.373	.394	.432	.403	.90
26.6	41.9	60.4	17.1	3.7	.0510	.427	.483	.484	.479	.478	.484	.486	.305	.324	.390	.398	.383	.423	.435	.95
30.3	41.0	61.3	16.1	6.1	.0898	.450	.511	.503	.488	.491	.490	.506	.329	.348	.398	.412	.426	.470	.472	1.00
34.7	45.2	68.4	16.6	-1.5	-.0251	.450	.486	.482	.475	.478	.480	.479	.375	.381	.425	.427	.442	.465	.449	1.05
39.2	45.1	68.2	16.6	.7	.0111	.450	.476	.470	.463	.464	.468	.469	.401	.394	.438	.441	.440	.466	.454	1.10
43.6	44.6	67.0	17.0	.4	.0080	.450	.470	.464	.461	.457	.462	.472	.407	.407	.443	.437	.440	.474	.448	1.15
48.1	44.1	65.3	18.2	.6	.0111	.450	.473	.468	.467	.472	.470	.479	.405	.408	.434	.422	.433	.479	.438	1.20
52.6	43.8	63.9	19.1	.1	.0023	.450	.468	.472	.467	.479	.475	.481	.401	.405	.427	.420	.430	.475	.443	1.25
57.0	43.5	62.7	20.0	.3	.0045	.450	.467	.465	.464	.475	.469	.484	.399	.403	.430	.428	.442	.474	.444	1.30
61.5	43.3	61.5	20.8	.7	.0107	.450	.457	.458	.458	.467	.469	.471	.407	.418	.432	.432	.439	.494	.441	1.35
65.9	43.0	60.5	21.6	.3	.0043	.450	.463	.459	.451	.459	.458	.460	.425	.425	.429	.434	.444	.489	.450	1.40
70.4	42.8	59.5	22.2	.6	.0089	.450	.462	.462	.455	.459	.452	.464	.421	.435	.431	.427	.442	.493	.442	1.45
74.9	42.6	58.8	22.7	.7	.0105	.450	.462	.456	.454	.461	.457	.464	.435	.435	.426	.428	.443	.480	.442	1.50
79.3	42.4	58.2	22.8	.3	.0047	.450	.460	.456	.451	.459	.462	.466	.437	.431	.424	.435	.438	.487	.437	1.55
83.8	42.2	57.8	23.0	.0	.0010	.450	.452	.448	.444	.456	.460	.473	.432	.437	.434	.438	.436	.487	.445	1.60
88.2	42.0	57.4	23.1	.1	.0018	.450	.448	.443	.439	.451	.460	.473	.432	.438	.438	.438	.438	.492	.455	1.65
92.7	41.9	57.1	23.2	.1	.0026	.450	.444	.443	.433	.446	.454	.468	.436	.436	.437	.445	.442	.489	.469	1.70
45.9	22.3	29.7	13.2	.0	.0007	.223	.220	.218	.216	.222	.223	.229	.218	.222	.218	.228	.215	.234	.234	1.75
22.8	12.1	14.9	8.6	0.0	.0001	.111	.109	.108	.106	.111	.111	.116	.107	.117	.107	.117	.107	.117	.117	1.80
23.7	12.1	14.8	8.7	0.0	0.0000	.111	.108	.110	.109	.114	.110	.112	.108	.118	.118	.108	.108	.118	.108	1.85
24.7	12.0	14.7	8.7	0.0	0.0000	.111	.109	.109	.110	.117	.109	.112	.116	.116	.116	.105	.105	.116	.108	1.90
0.0	0.0	0.0	0.0	0.0	0.0000	0.000	0.000	0.000	0.000	0.000	0.000	0.000	0.000	0.000	0.000	0.000	0.000	0.000	0.000	1.95
0.0	0.0	0.0	0.0	0.0	0.0000	0.000	0.000	0.000	0.000	0.000	0.000	0.000	0.000	0.000	0.000	0.000	0.000	0.000	0.000	2.00
0.0	0.0	0.0	0.0	0.0	0.0000	0.000	0.000	0.000	0.000	0.000	0.000	0.000	0.000	0.000	0.000	0.000	0.000	0.000	0.000	2.05
0.0	0.0	0.0	0.0	0.0	0.0000	0.000	0.000	0.000	0.000	0.000	0.000	0.000	0.000	0.000	0.000	0.000	0.000	0.000	0.000	2.10
0.0	0.0	0.0	0.0	0.0	0.0000	0.000	0.000	0.000	0.000	0.000	0.000	0.000	0.000	0.000	0.000	0.000	0.000	0.000	0.000	2.15
0.0	0.0	0.0	0.0	0.0	0.0000	0.000	0.000	0.000	0.000	0.000	0.000	0.000	0.000	0.000	0.000	0.000	0.000	0.000	0.000	2.20
0.0	0.0	0.0	0.0	0.0	0.0000	0.000	0.000	0.000	0.000	0.000	0.000	0.000	0.000	0.000	0.000	0.000	0.000	0.000	0.000	2.25
0.0	0.0	0.0	0.0	0.0	0.0000	0.000	0.000	0.000	0.000	0.000	0.000	0.000	0.000	0.000	0.000	0.000	0.000	0.000	0.000	2.30
0.0	0.0	0.0	0.0	0.0	0.0000	0.000	0.000	0.000	0.000	0.000	0.000	0.000	0.000	0.000	0.000	0.000	0.000	0.000	0.000	2.35
0.0	0.0	0.0	0.0	0.0	0.0000	0.000	0.000	0.000	0.000	0.000	0.000	0.000	0.000	0.000	0.000	0.000	0.000	0.000	0.000	2.40
0.0	0.0	0.0	0.0	0.0	0.0000	0.000	0.000	0.000	0.000	0.000	0.000	0.000	0.000	0.000	0.000	0.000	0.000	0.000	0.000	2.45

D-Tables

The D-tables give the standard-deviation history of each local mean pressurant mole fraction, according to experimental set, for values of dimensionless time τ from 0.00 to 2.45 (see Appendix C for program). Each experimental set is treated in a separate D-table.

Set 1, Table D — Standard Deviation of Mean Local Pressurant Fractions, Scaling Runs 230-236

LOCATIONS I

1	2	3	4	5	6	7	8	9	10	11	12	13	TAU
0.000	0.000	0.000	0.000	0.000	0.000	0.000	0.000	0.000	0.000	0.000	0.000	0.000	0.00
.271	.160	.051	.099	.157	.142	.203	.085	.100	.133	.096	.172	.138	.05
.505	.297	.096	.184	.290	.264	.384	.158	.193	.245	.181	.318	.253	.10
.380	.228	.088	.155	.219	.195	.294	.118	.169	.197	.147	.246	.197	.15
.270	.172	.078	.125	.164	.142	.213	.078	.132	.158	.116	.186	.154	.20
.162	.120	.076	.096	.114	.097	.143	.056	.100	.121	.094	.129	.115	.25
.092	.084	.075	.072	.081	.069	.107	.064	.078	.095	.084	.084	.091	.30
.084	.077	.057	.058	.075	.061	.100	.060	.072	.084	.067	.069	.081	.35
.072	.071	.040	.047	.065	.053	.094	.061	.064	.075	.051	.059	.072	.40
.063	.069	.032	.042	.057	.049	.089	.058	.059	.072	.040	.053	.064	.45
.054	.061	.024	.039	.055	.056	.085	.049	.053	.071	.035	.048	.063	.50
.052	.051	.020	.037	.055	.058	.079	.041	.050	.065	.032	.050	.067	.55
.050	.039	.013	.027	.046	.050	.063	.032	.038	.064	.039	.056	.056	.60
.043	.028	.014	.021	.038	.044	.060	.036	.032	.062	.047	.063	.042	.65
.038	.025	.013	.019	.035	.042	.069	.033	.031	.052	.040	.059	.032	.70
.035	.016	.012	.014	.030	.035	.062	.024	.032	.047	.028	.054	.040	.75
.032	.014	.011	.013	.031	.028	.057	.025	.039	.044	.025	.049	.041	.80
.036	.014	.013	.013	.029	.025	.056	.033	.044	.045	.028	.046	.033	.85
.026	.026	.018	.021	.027	.038	.057	.031	.044	.057	.033	.066	.030	.90
.032	.025	.017	.021	.029	.027	.054	.030	.031	.052	.029	.051	.040	.95
.023	.021	.024	.021	.024	.022	.043	.028	.035	.046	.031	.044	.043	1.00
.028	.016	.014	.013	.019	.017	.049	.029	.034	.044	.021	.043	.048	1.05
.036	.028	.016	.018	.017	.024	.043	.028	.030	.050	.028	.045	.050	1.10
.033	.029	.015	.013	.016	.028	.051	.031	.030	.043	.032	.052	.048	1.15
.026	.020	.014	.011	.021	.031	.055	.035	.032	.040	.031	.043	.052	1.20
.021	.020	.020	.021	.024	.034	.049	.027	.032	.042	.033	.050	.050	1.25
.028	.023	.017	.022	.030	.035	.054	.037	.036	.051	.029	.055	.049	1.30
.033	.029	.017	.022	.028	.032	.059	.035	.038	.053	.032	.055	.049	1.35
.028	.025	.015	.020	.025	.027	.051	.026	.038	.053	.038	.043	.052	1.40
.031	.021	.012	.013	.021	.025	.054	.031	.039	.045	.029	.042	.053	1.45
.027	.019	.010	.010	.015	.027	.048	.021	.024	.042	.037	.049	.051	1.50
.033	.020	.008	.012	.018	.026	.043	.026	.041	.047	.026	.054	.052	1.55
.032	.016	.016	.015	.017	.028	.049	.028	.036	.039	.030	.047	.052	1.60
.031	.022	.020	.022	.024	.031	.051	.031	.036	.039	.031	.059	.048	1.65
.026	.026	.019	.026	.032	.030	.057	.036	.042	.054	.032	.046	.046	1.70
.030	.023	.013	.022	.030	.036	.054	.030	.046	.057	.035	.045	.052	1.75
.368	.362	.353	.361	.369	.382	.344	.343	.343	.339	.343	.342	.342	1.80
.369	.363	.353	.362	.369	.382	.345	.342	.342	.338	.339	.344	.342	1.85
.519	.516	.505	.520	.528	.541	.481	.480	.479	.472	.479	.487	.479	1.90
0.000	0.000	0.000	0.000	0.000	0.000	0.000	0.000	0.000	0.000	0.000	0.000	0.000	1.95
0.000	0.000	0.000	0.000	0.000	0.000	0.000	0.000	0.000	0.000	0.000	0.000	0.000	2.00
0.000	0.000	0.000	0.000	0.000	0.000	0.000	0.000	0.000	0.000	0.000	0.000	0.000	2.05
0.000	0.000	0.000	0.000	0.000	0.000	0.000	0.000	0.000	0.000	0.000	0.000	0.000	2.10
0.000	0.000	0.000	0.000	0.000	0.000	0.000	0.000	0.000	0.000	0.000	0.000	0.000	2.15
0.000	0.000	0.000	0.000	0.000	0.000	0.000	0.000	0.000	0.000	0.000	0.000	0.000	2.20
0.000	0.000	0.000	0.000	0.000	0.000	0.000	0.000	0.000	0.000	0.000	0.000	0.000	2.25
0.000	0.000	0.000	0.000	0.000	0.000	0.000	0.000	0.000	0.000	0.000	0.000	0.000	2.30
0.000	0.000	0.000	0.000	0.000	0.000	0.000	0.000	0.000	0.000	0.000	0.000	0.000	2.35
0.000	0.000	0.000	0.000	0.000	0.000	0.000	0.000	0.000	0.000	0.000	0.000	0.000	2.40
0.000	0.000	0.000	0.000	0.000	0.000	0.000	0.000	0.000	0.000	0.000	0.000	0.000	2.45

Set 2, Table D — Standard Deviation of Mean Local Pressurant Fractions, Scaling Runs 237-240

LOCATIONS I

1	2	3	4	5	6	7	8	9	10	11	12	13	TAU
0.000	0.000	0.000	0.000	0.000	0.000	0.000	0.000	0.000	0.000	0.000	0.000	0.000	0.00
.202	.051	.334	.047	.162	.175	.027	.081	.083	.043	.034	.474	.078	.05
.348	.093	.591	.093	.200	.303	.050	.137	.145	.076	.060	.822	.149	.10
.304	.091	.545	.079	.255	.278	.049	.109	.122	.061	.069	.695	.152	.15
.254	.086	.479	.055	.231	.254	.048	.080	.093	.039	.067	.554	.146	.20
.203	.083	.421	.035	.211	.234	.048	.060	.071	.026	.059	.446	.142	.25
.166	.076	.372	.026	.191	.209	.050	.047	.055	.017	.053	.375	.134	.30
.152	.062	.339	.028	.172	.180	.043	.043	.050	.024	.074	.377	.122	.35
.151	.072	.307	.033	.152	.156	.038	.039	.041	.036	.093	.374	.120	.40
.157	.086	.283	.043	.139	.152	.031	.040	.029	.039	.102	.364	.128	.45
.160	.051	.273	.044	.137	.150	.026	.046	.018	.023	.055	.342	.137	.50
.156	.020	.263	.052	.139	.147	.025	.050	.028	.011	.043	.330	.133	.55
.137	.032	.244	.046	.125	.130	.025	.037	.039	.017	.054	.298	.145	.60
.131	.034	.232	.036	.110	.119	.023	.034	.044	.024	.058	.281	.154	.65
.133	.021	.226	.014	.109	.118	.020	.045	.043	.014	.048	.279	.141	.70
.120	.015	.239	.010	.105	.090	.023	.055	.036	.021	.052	.281	.087	.75
.107	.035	.249	.021	.088	.087	.021	.074	.044	.021	.052	.269	.087	.80
.099	.042	.221	.032	.086	.099	.036	.058	.041	.024	.043	.246	.062	.85
.105	.024	.217	.034	.101	.096	.028	.031	.042	.023	.047	.233	.081	.90
.084	.035	.200	.014	.080	.099	.025	.030	.025	.008	.035	.214	.062	.95
.095	.080	.315	.073	.072	.084	.018	.036	.060	.057	.021	.134	.081	1.00
.077	.036	.157	.033	.071	.073	.023	.030	.034	.041	.038	.104	.121	1.05
.070	.018	.144	.014	.068	.071	.025	.006	.021	.031	.043	.173	.065	1.10
.071	.023	.136	.013	.060	.067	.015	.016	.021	.020	.029	.193	.063	1.15
.069	.031	.157	.015	.048	.068	.009	.025	.025	.019	.033	.179	.065	1.20
.071	.020	.155	.010	.058	.070	.025	.017	.016	.011	.036	.179	.041	1.25
.070	.019	.157	.012	.058	.063	.028	.019	.027	.021	.047	.153	.049	1.30
.067	.018	.159	.012	.062	.060	.028	.022	.015	.012	.043	.170	.053	1.35
.064	.021	.168	.012	.067	.071	.024	.027	.020	.012	.049	.173	.056	1.40
.064	.028	.174	.014	.073	.072	.027	.025	.016	.012	.036	.177	.051	1.45
.071	.025	.168	.010	.067	.075	.023	.027	.008	.015	.039	.182	.040	1.50
.064	.021	.167	.015	.064	.069	.020	.040	.014	.013	.040	.182	.052	1.55
.071	.022	.175	.025	.064	.073	.013	.034	.018	.007	.037	.196	.051	1.60
.572	.494	.471	.501	.567	.578	.470	.502	.476	.464	.455	.483	.450	1.65
.579	.493	.465	.496	.564	.580	.468	.500	.474	.462	.464	.481	.459	1.70
.543	.429	.282	.426	.509	.531	.397	.452	.409	.386	.364	.404	.354	1.75
.542	.430	.279	.428	.511	.531	.393	.448	.412	.382	.360	.423	.349	1.80
0.000	0.000	0.000	0.000	0.000	0.000	0.000	0.000	0.000	0.000	0.000	0.000	0.000	1.85
0.000	0.000	0.000	0.000	0.000	0.000	0.000	0.000	0.000	0.000	0.000	0.000	0.000	1.90
0.000	0.000	0.000	0.000	0.000	0.000	0.000	0.000	0.000	0.000	0.000	0.000	0.000	1.95
0.000	0.000	0.000	0.000	0.000	0.000	0.000	0.000	0.000	0.000	0.000	0.000	0.000	2.00
0.000	0.000	0.000	0.000	0.000	0.000	0.000	0.000	0.000	0.000	0.000	0.000	0.000	2.05
0.000	0.000	0.000	0.000	0.000	0.000	0.000	0.000	0.000	0.000	0.000	0.000	0.000	2.10
0.000	0.000	0.000	0.000	0.000	0.000	0.000	0.000	0.000	0.000	0.000	0.000	0.000	2.15
0.000	0.000	0.000	0.000	0.000	0.000	0.000	0.000	0.000	0.000	0.000	0.000	0.000	2.20
0.000	0.000	0.000	0.000	0.000	0.000	0.000	0.000	0.000	0.000	0.000	0.000	0.000	2.25
0.000	0.000	0.000	0.000	0.000	0.000	0.000	0.000	0.000	0.000	0.000	0.000	0.000	2.30
0.000	0.000	0.000	0.000	0.000	0.000	0.000	0.000	0.000	0.000	0.000	0.000	0.000	2.35
0.000	0.000	0.000	0.000	0.000	0.000	0.000	0.000	0.000	0.000	0.000	0.000	0.000	2.40
0.000	0.000	0.000	0.000	0.000	0.000	0.000	0.000	0.000	0.000	0.000	0.000	0.000	2.45

Set 3, Table D — Standard Deviation of Mean Local Pressurant Fractions, Scaling Runs 241-244

LOCATIONS I

1	2	3	4	5	6	7	8	9	10	11	12	13	TAU
0.000	0.000	0.000	0.000	0.000	0.000	0.000	0.000	0.000	0.000	0.000	0.000	0.000	0.00
.461	.297	.055	.232	.409	.519	.171	.210	.487	.496	.194	.305	.176	.05
2.345	2.254	1.930	1.717	2.446	3.016	1.969	1.949	1.975	1.990	1.418	2.497	1.980	.10
2.737	2.643	2.292	2.031	2.895	3.524	2.310	2.305	2.298	2.330	1.696	2.940	2.339	.15
1.457	1.321	1.268	1.266	1.346	1.313	1.769	1.004	.718	1.425	.719	1.347	1.006	.20
1.243	1.133	1.098	1.087	1.175	1.215	1.558	.874	.561	1.158	.624	1.267	.945	.25
.141	.138	.163	.138	.137	.202	.271	.098	.015	.063	.089	.294	.112	.30
.086	.114	.118	.082	.100	.103	.035	.065	.082	.095	.114	.177	.052	.35
.049	.036	.017	.014	.022	.020	.063	.078	.041	.038	.036	.097	.036	.40
.082	.051	.039	.031	.022	.032	.051	.061	.051	.035	.061	.039	.058	.45
.059	.016	.028	.042	.045	.018	.016	.039	.039	.025	.018	.059	.045	.50
.017	.031	.043	.042	.043	.027	.027	.050	.014	.007	.026	.082	.048	.55
.017	.014	.036	.025	.011	.045	.052	.024	.039	.018	.028	.044	.044	.60
.040	.028	.031	.037	.039	.023	.095	.062	.012	.021	.040	.031	.033	.65
.029	.040	.030	.032	.040	.007	.092	.079	.011	.028	.025	.049	.025	.70
.056	.037	.044	.043	.031	.047	.040	.026	.027	.041	.043	.069	.025	.75
.031	.029	.019	.054	.017	.024	.020	.020	.026	.047	.037	.021	.049	.80
.036	.032	.035	.043	.041	.040	.018	.040	.046	.058	.049	.045	.048	.85
.054	.026	.020	.022	.039	.045	.018	.038	.026	.014	.018	.030	.010	.90
.021	.021	.031	.024	.049	.063	.038	.039	.031	.018	.022	.076	.057	.95
.029	.024	.020	.016	.025	.045	.045	.070	.052	.031	.027	.044	.047	1.00
.019	.022	.021	.007	.008	.018	.025	.047	.029	.016	.024	.013	.030	1.05
.027	.009	.019	.017	.013	.014	.019	.050	.018	.035	.029	.020	.009	1.10
.005	.008	.017	.006	.010	.006	.027	.042	.011	.024	.014	.018	.012	1.15
.018	.016	.008	.018	.022	.022	.028	.041	.032	.028	.035	.037	.017	1.20
.010	.006	.017	.034	.032	.028	.044	.027	.056	.047	.029	.018	.024	1.25
.022	.011	.020	.038	.043	.039	.038	.024	.068	.045	.044	.030	.017	1.30
.027	.026	.017	.032	.033	.038	.025	.030	.051	.060	.062	.019	.033	1.35
.039	.034	.020	.019	.019	.028	.027	.026	.037	.034	.034	.038	.043	1.40
.030	.017	.020	.029	.036	.020	.021	.028	.021	.025	.036	.034	.054	1.45
.048	.026	.024	.025	.018	.018	.042	.021	.026	.032	.050	.033	.053	1.50
.023	.012	.009	.018	.023	.018	.024	.033	.044	.046	.028	.066	.038	1.55
.015	.015	.012	.038	.024	.023	.029	.040	.052	.025	.031	.051	.042	1.60
.015	.007	.007	.031	.022	.027	.030	.013	.029	.029	.029	.032	.057	1.65
.020	.014	.012	.021	.027	.019	.008	.019	.042	.016	.041	.035	.052	1.70
.010	.013	.030	.013	.006	.021	.016	.028	.035	.009	.009	.054	.063	1.75
.500	.505	.506	.508	.501	.503	.502	.502	.502	.494	.489	.508	.501	1.80
.499	.503	.502	.507	.495	.499	.495	.495	.495	.507	.501	.532	.495	1.85
.497	.506	.503	.509	.497	.499	.493	.493	.493	.505	.505	.536	.493	1.90
.430	.430	.435	.439	.437	.442	.432	.432	.432	.432	.432	.453	.432	1.95
0.000	0.000	0.000	0.000	0.000	0.000	0.000	0.000	0.000	0.000	0.000	0.000	0.000	2.00
0.000	0.000	0.000	0.000	0.000	0.000	0.000	0.000	0.000	0.000	0.000	0.000	0.000	2.05
0.000	0.000	0.000	0.000	0.000	0.000	0.000	0.000	0.000	0.000	0.000	0.000	0.000	2.10
0.000	0.000	0.000	0.000	0.000	0.000	0.000	0.000	0.000	0.000	0.000	0.000	0.000	2.15
0.000	0.000	0.000	0.000	0.000	0.000	0.000	0.000	0.000	0.000	0.000	0.000	0.000	2.20
0.000	0.000	0.000	0.000	0.000	0.000	0.000	0.000	0.000	0.000	0.000	0.000	0.000	2.25
0.000	0.000	0.000	0.000	0.000	0.000	0.000	0.000	0.000	0.000	0.000	0.000	0.000	2.30
0.000	0.000	0.000	0.000	0.000	0.000	0.000	0.000	0.000	0.000	0.000	0.000	0.000	2.35
0.000	0.000	0.000	0.000	0.000	0.000	0.000	0.000	0.000	0.000	0.000	0.000	0.000	2.40
0.000	0.000	0.000	0.000	0.000	0.000	0.000	0.000	0.000	0.000	0.000	0.000	0.000	2.45

Set 4, Table D — Standard Deviation of Mean Local Pressurant Fractions, Scaling Runs 245-248

LOCATIONS I

1	2	3	4	5	6	7	8	9	10	11	12	13	TAU
0.000	0.000	0.000	0.000	0.000	0.000	0.000	0.000	0.000	0.000	0.000	0.000	0.000	0.00
.251	.150	.202	.132	.158	.185	.156	.151	.158	.215	.122	.165	.164	.05
1.257	.955	.655	.621	.926	1.127	1.103	.938	.592	.845	.449	.894	.716	.10
3.208	3.014	3.441	2.905	4.132	3.890	5.483	3.670	2.161	1.515	1.534	3.841	2.452	.15
11.231	11.012	12.643	10.747	15.074	13.898	20.263	13.954	7.671	5.018	5.062	14.006	8.702	.20
5.498	5.357	6.103	5.189	7.248	6.629	9.751	6.699	3.702	2.535	2.503	6.714	4.174	.25
.242	.240	.266	.205	.233	.250	.447	.282	.095	.108	.101	.323	.267	.30
.166	.100	.193	.112	.111	.067	.202	.183	.078	.075	.061	.232	.219	.35
.109	.102	.061	.036	.072	.064	.096	.126	.076	.060	.082	.185	.190	.40
.097	.075	.083	.049	.060	.069	.096	.104	.041	.059	.041	.106	.121	.45
.080	.046	.062	.033	.039	.044	.057	.068	.055	.063	.027	.040	.083	.50
.045	.026	.044	.024	.029	.030	.070	.021	.011	.009	.042	.032	.031	.55
.040	.034	.019	.005	.046	.077	.089	.069	.031	.032	.040	.085	.050	.60
.049	.047	.015	.013	.029	.035	.054	.064	.030	.042	.060	.014	.023	.65
.020	.022	.046	.044	.026	.016	.022	.055	.057	.043	.011	.076	.051	.70
.032	.041	.042	.017	.027	.026	.103	.093	.012	.035	.047	.023	.056	.75
.036	.032	.030	.028	.060	.044	.079	.065	.067	.030	.052	.020	.020	.80
.045	.060	.062	.057	.057	.057	.073	.051	.041	.035	.031	.051	.058	.85
.021	.025	.040	.025	.023	.031	.109	.078	.038	.048	.025	.029	.038	.90
.033	.032	.033	.019	.022	.024	.073	.057	.041	.022	.037	.054	.025	.95
.043	.035	.030	.047	.024	.020	.046	.051	.061	.053	.038	.043	.060	1.00
.033	.025	.024	.032	.027	.028	.030	.012	.004	.008	.007	.003	.013	1.05
.029	.024	.026	.011	.021	.020	.008	.018	.022	.023	.030	.035	.019	1.10
.032	.029	.037	.031	.032	.039	.011	.027	.040	.042	.035	.033	.024	1.15
.038	.037	.027	.040	.038	.048	.025	.020	.045	.057	.038	.040	.025	1.20
.035	.031	.015	.035	.045	.043	.020	.029	.053	.039	.018	.040	.034	1.25
.042	.027	.011	.018	.018	.042	.023	.020	.015	.032	.019	.022	.029	1.30
.036	.021	.010	.019	.020	.027	.025	.022	.015	.015	.021	.051	.030	1.35
.024	.022	.006	.018	.008	.025	.027	.008	.016	.017	.039	.072	.028	1.40
.015	.031	.017	.018	.020	.025	.018	.029	.021	.027	.045	.058	.038	1.45
.016	.011	.019	.021	.010	.028	.031	.031	.041	.047	.049	.032	.014	1.50
.029	.018	.011	.019	.027	.026	.020	.035	.048	.052	.040	.029	.038	1.55
.025	.010	.012	.015	.017	.031	.012	.024	.037	.023	.015	.051	.021	1.60
.019	.010	.016	.007	.017	.021	.017	.026	.024	.024	.019	.056	.015	1.65
.012	.011	.019	.012	.006	.023	.021	.021	.027	.012	.025	.052	.035	1.70
.489	.486	.481	.494	.497	.511	.487	.495	.487	.508	.479	.521	.521	1.75
.419	.415	.407	.427	.427	.446	.411	.450	.412	.449	.411	.450	.450	1.80
.414	.422	.418	.440	.426	.433	.414	.454	.454	.416	.414	.454	.416	1.85
.419	.421	.425	.449	.421	.432	.445	.445	.445	.405	.405	.445	.414	1.90
0.000	0.000	0.000	0.000	0.000	0.000	0.000	0.000	0.000	0.000	0.000	0.000	0.000	1.95
0.000	0.000	0.000	0.000	0.000	0.000	0.000	0.000	0.000	0.000	0.000	0.000	0.000	2.00
0.000	0.000	0.000	0.000	0.000	0.000	0.000	0.000	0.000	0.000	0.000	0.000	0.000	2.05
0.000	0.000	0.000	0.000	0.000	0.000	0.000	0.000	0.000	0.000	0.000	0.000	0.000	2.10
0.000	0.000	0.000	0.000	0.000	0.000	0.000	0.000	0.000	0.000	0.000	0.000	0.000	2.15
0.000	0.000	0.000	0.000	0.000	0.000	0.000	0.000	0.000	0.000	0.000	0.000	0.000	2.20
0.000	0.000	0.000	0.000	0.000	0.000	0.000	0.000	0.000	0.000	0.000	0.000	0.000	2.25
0.000	0.000	0.000	0.000	0.000	0.000	0.000	0.000	0.000	0.000	0.000	0.000	0.000	2.30
0.000	0.000	0.000	0.000	0.000	0.000	0.000	0.000	0.000	0.000	0.000	0.000	0.000	2.35
0.000	0.000	0.000	0.000	0.000	0.000	0.000	0.000	0.000	0.000	0.000	0.000	0.000	2.40
0.000	0.000	0.000	0.000	0.000	0.000	0.000	0.000	0.000	0.000	0.000	0.000	0.000	2.45

E-Tables

These tables give the local mean pressurant fraction deviations for dimensionless-time values 0.00 to 2.45. By pressurant-fraction deviation, we mean the ratio of the difference between the local pressurant and the mean pressurant fraction at time t to the mean pressurant fraction at the time of valve closure, $t = t_c$. As in the D-tables, these values are given at equal intervals of dimensionless time τ (see Appendix C for program).

Set 1, Table E — Deviations of Mean Local Pressurant Fractions, Scaling Runs 230-236

LOCATIONS I

1	2	3	4	5	6	7	8	9	10	11	12	13	TAU
0.000	0.000	0.000	0.000	0.000	0.000	0.000	0.000	0.000	0.000	0.000	0.000	0.000	0.00
-.278	-.165	-.003	-.067	-.175	-.170	.221	.067	.051	.144	.055	.179	.137	.05
-.329	-.315	-.008	-.127	-.333	-.325	.425	.127	.100	.277	.103	.340	.260	.10
-.458	-.284	-.033	-.126	-.304	-.285	.382	.118	.102	.261	.087	.306	.229	.15
-.343	-.227	-.062	-.117	-.238	-.193	.297	.112	.093	.217	.066	.226	.169	.20
-.227	-.168	-.090	-.107	-.170	-.102	.208	.102	.085	.173	.044	.146	.109	.25
-.138	-.122	-.108	-.096	-.115	-.029	.135	.101	.076	.137	.029	.078	.061	.30
-.117	-.111	-.111	-.087	-.096	-.011	.115	.096	.072	.121	.030	.056	.044	.35
-.100	-.103	-.114	-.075	-.081	-.001	.102	.088	.070	.105	.033	.045	.033	.40
-.083	-.090	-.110	-.066	-.068	.008	.086	.080	.066	.086	.032	.037	.024	.45
-.066	-.070	-.098	-.060	-.057	.012	.061	.061	.055	.068	.028	.040	.028	.50
-.047	-.054	-.085	-.055	-.045	.013	.039	.041	.043	.053	.023	.041	.031	.55
-.027	-.038	-.067	-.043	-.027	.028	.016	.022	.026	.042	.019	.035	.011	.60
-.007	-.021	-.050	-.026	-.007	.042	-.012	.011	.012	.026	.013	.024	-.007	.65
-.002	-.013	-.038	-.010	.009	.055	-.022	.008	.010	.008	-.000	.004	-.016	.70
.006	-.007	-.035	-.004	.017	.061	-.022	.003	.007	.002	.001	.002	-.024	.75
.016	.003	-.039	-.006	.017	.061	-.023	-.005	-.001	.005	.002	.004	-.030	.80
.026	.010	-.038	-.012	.013	.059	-.028	-.001	.009	.007	.010	-.007	-.047	.85
.017	.008	-.023	-.003	.019	.064	-.039	.008	-.003	-.005	.002	-.004	-.042	.90
.026	.011	-.031	-.008	.019	.066	-.026	.009	.006	-.014	-.003	-.009	-.044	.95
.040	.013	-.029	-.001	.028	.069	-.023	-.005	.001	-.011	-.017	-.015	-.042	1.00
.044	.027	-.013	.010	.039	.080	-.027	-.017	-.017	-.027	-.025	-.028	-.043	1.05
.047	.034	-.001	.018	.051	.081	-.032	-.018	-.019	-.034	-.031	-.039	-.053	1.10
.048	.031	.002	.020	.054	.088	-.025	-.021	-.022	-.034	-.039	-.045	-.053	1.15
.060	.042	.007	.031	.057	.086	-.032	-.023	-.032	-.046	-.042	-.055	-.050	1.20
.060	.045	.011	.028	.054	.087	-.033	-.029	-.030	-.048	-.040	-.051	-.049	1.25
.061	.042	.010	.028	.048	.084	-.040	-.030	-.031	-.040	-.044	-.042	-.041	1.30
.060	.039	.005	.026	.048	.081	-.042	-.028	-.032	-.043	-.036	-.041	-.031	1.35
.062	.041	.003	.024	.050	.086	-.034	-.025	-.039	-.051	-.039	-.041	-.034	1.40
.059	.039	.003	.025	.044	.081	-.033	-.023	-.025	-.043	-.043	-.038	-.041	1.45
.053	.032	-.002	.020	.040	.084	-.029	-.019	-.025	-.044	-.039	-.032	-.034	1.50
.051	.029	-.003	.018	.040	.079	-.032	-.015	-.023	-.042	-.032	-.030	-.037	1.55
.047	.026	-.006	.019	.044	.080	-.025	-.019	-.020	-.035	-.037	-.030	-.041	1.60
.047	.029	-.002	.021	.048	.081	-.027	-.015	-.016	-.042	-.040	-.034	-.046	1.65
.050	.031	-.003	.021	.050	.086	-.026	-.017	-.023	-.043	-.043	-.031	-.049	1.70
.055	.031	-.002	.025	.057	.097	-.029	-.022	-.035	-.050	-.040	-.036	-.047	1.75
.037	.021	-.000	.018	.040	.071	-.021	-.026	-.026	-.034	-.025	-.026	-.029	1.80
.038	.025	.002	.021	.039	.071	-.020	-.026	-.028	-.037	-.032	-.021	-.028	1.85
.017	.015	.006	.018	.026	.037	-.015	-.016	-.017	-.023	-.017	-.010	-.017	1.90
0.000	0.000	0.000	0.000	0.000	0.000	0.000	0.000	0.000	0.000	0.000	0.000	0.000	1.95
0.000	0.000	0.000	0.000	0.000	0.000	0.000	0.000	0.000	0.000	0.000	0.000	0.000	2.00
0.000	0.000	0.000	0.000	0.000	0.000	0.000	0.000	0.000	0.000	0.000	0.000	0.000	2.05
0.000	0.000	0.000	0.000	0.000	0.000	0.000	0.000	0.000	0.000	0.000	0.000	0.000	2.10
0.000	0.000	0.000	0.000	0.000	0.000	0.000	0.000	0.000	0.000	0.000	0.000	0.000	2.15
0.000	0.000	0.000	0.000	0.000	0.000	0.000	0.000	0.000	0.000	0.000	0.000	0.000	2.20
0.000	0.000	0.000	0.000	0.000	0.000	0.000	0.000	0.000	0.000	0.000	0.000	0.000	2.25
0.000	0.000	0.000	0.000	0.000	0.000	0.000	0.000	0.000	0.000	0.000	0.000	0.000	2.30
0.000	0.000	0.000	0.000	0.000	0.000	0.000	0.000	0.000	0.000	0.000	0.000	0.000	2.35
0.000	0.000	0.000	0.000	0.000	0.000	0.000	0.000	0.000	0.000	0.000	0.000	0.000	2.40
0.000	0.000	0.000	0.000	0.000	0.000	0.000	0.000	0.000	0.000	0.000	0.000	0.000	2.45

7 CASES

Set 2, Table E — Deviations of Mean Local Pressurant Fractions, Scaling Runs 237-240

LOCATIONS I

1	2	3	4	5	6	7	8	9	10	11	12	13	TAU
0.000	0.000	0.000	0.000	0.000	0.000	0.000	0.000	0.000	0.000	0.000	0.000	0.000	0.00
-.305	-.095	.542	-.047	-.213	-.213	-.034	-.135	-.145	-.079	-.016	.644	.104	.05
-.570	-.183	1.019	-.090	-.395	-.395	-.065	-.253	-.273	-.148	-.034	1.206	.197	.10
-.549	-.194	1.013	-.103	-.384	-.376	-.082	-.252	-.275	-.162	-.063	1.227	.200	.15
-.496	-.194	.946	-.114	-.353	-.336	-.098	-.237	-.260	-.166	-.095	1.210	.187	.20
-.444	-.194	.873	-.113	-.319	-.293	-.114	-.216	-.241	-.165	-.119	1.164	.177	.25
-.405	-.191	.810	-.112	-.284	-.247	-.130	-.196	-.228	-.170	-.138	1.134	.163	.30
-.406	-.185	.793	-.107	-.260	-.214	-.154	-.194	-.235	-.187	-.132	1.141	.140	.35
-.399	-.172	.775	-.109	-.237	-.181	-.178	-.191	-.245	-.208	-.119	1.151	.108	.40
-.385	-.145	.767	-.120	-.221	-.158	-.201	-.194	-.257	-.226	-.097	1.160	.066	.45
-.357	-.086	.782	-.138	-.210	-.140	-.219	-.201	-.271	-.245	-.110	1.166	.025	.50
-.335	-.040	.796	-.147	-.197	-.125	-.235	-.209	-.271	-.253	-.142	1.162	-.006	.55
-.315	-.070	.812	-.138	-.166	-.103	-.240	-.202	-.270	-.254	-.157	1.138	-.033	.60
-.300	-.109	.823	-.135	-.143	-.086	-.234	-.194	-.274	-.261	-.157	1.117	-.049	.65
-.285	-.121	.818	-.156	-.151	-.092	-.224	-.200	-.266	-.263	-.150	1.085	.001	.70
-.266	-.121	.803	-.176	-.163	-.110	-.196	-.194	-.259	-.259	-.125	1.060	.002	.75
-.245	-.131	.794	-.181	-.184	-.131	-.169	-.171	-.233	-.249	-.090	1.044	-.039	.80
-.227	-.092	.765	-.186	-.156	-.063	-.179	-.183	-.233	-.253	-.110	1.017	-.093	.85
-.218	-.102	.754	-.172	-.126	-.049	-.200	-.158	-.222	-.218	-.112	.987	-.167	.90
-.188	-.122	.717	-.167	-.110	-.064	-.180	-.136	-.216	-.219	-.088	.934	-.147	.95
-.070	-.024	.342	-.100	-.061	-.038	-.148	-.115	-.162	-.172	-.060	.633	-.023	1.00
.023	-.021	-.009	-.066	.013	.052	-.066	-.033	-.067	-.067	-.045	.300	-.006	1.05
.061	-.011	-.041	-.030	.053	.094	-.059	-.017	-.046	-.057	-.061	.181	-.063	1.10
.076	-.003	-.058	-.019	.067	.100	-.056	-.022	-.051	-.056	-.055	.172	-.088	1.15
.084	.001	-.063	-.007	.082	.110	-.061	-.016	-.056	-.071	-.075	.167	-.091	1.20
.084	-.001	-.067	-.006	.082	.114	-.051	-.013	-.049	-.064	-.066	.139	-.097	1.25
.088	-.003	-.074	-.010	.074	.108	-.048	-.007	-.048	-.061	-.067	.152	-.097	1.30
.083	-.008	-.082	-.018	.070	.101	-.044	-.002	-.032	-.057	-.072	.148	-.086	1.35
.090	-.001	-.073	-.013	.082	.109	-.057	-.014	-.045	-.057	-.070	.139	-.088	1.40
.091	.003	-.067	-.009	.080	.110	-.061	-.021	-.052	-.064	-.063	.149	-.088	1.45
.091	-.004	-.080	-.014	.077	.111	-.049	-.022	-.046	-.069	-.067	.156	-.084	1.50
.098	-.001	-.071	-.004	.074	.111	-.061	-.011	-.060	-.072	-.072	.154	-.080	1.55
.093	.001	-.064	.001	.079	.106	-.053	.001	-.070	-.083	-.082	.163	-.087	1.60
.074	-.001	-.052	.005	.071	.081	-.025	.005	-.019	-.032	-.041	-.013	-.048	1.65
.080	-.003	-.057	.001	.067	.083	-.028	.003	-.021	-.034	-.034	-.015	-.040	1.70
.070	.004	-.081	.002	.050	.063	-.014	.017	-.008	-.021	-.033	-.010	-.039	1.75
.069	.005	-.083	.003	.052	.063	-.017	.015	-.006	-.023	-.036	.001	-.042	1.80
0.000	0.000	0.000	0.000	0.000	0.000	0.000	0.000	0.000	0.000	0.000	0.000	0.000	1.85
0.000	0.000	0.000	0.000	0.000	0.000	0.000	0.000	0.000	0.000	0.000	0.000	0.000	1.90
0.000	0.000	0.000	0.000	0.000	0.000	0.000	0.000	0.000	0.000	0.000	0.000	0.000	1.95
0.000	0.000	0.000	0.000	0.000	0.000	0.000	0.000	0.000	0.000	0.000	0.000	0.000	2.00
0.000	0.000	0.000	0.000	0.000	0.000	0.000	0.000	0.000	0.000	0.000	0.000	0.000	2.05
0.000	0.000	0.000	0.000	0.000	0.000	0.000	0.000	0.000	0.000	0.000	0.000	0.000	2.10
0.000	0.000	0.000	0.000	0.000	0.000	0.000	0.000	0.000	0.000	0.000	0.000	0.000	2.15
0.000	0.000	0.000	0.000	0.000	0.000	0.000	0.000	0.000	0.000	0.000	0.000	0.000	2.20
0.000	0.000	0.000	0.000	0.000	0.000	0.000	0.000	0.000	0.000	0.000	0.000	0.000	2.25
0.000	0.000	0.000	0.000	0.000	0.000	0.000	0.000	0.000	0.000	0.000	0.000	0.000	2.30
0.000	0.000	0.000	0.000	0.000	0.000	0.000	0.000	0.000	0.000	0.000	0.000	0.000	2.35
0.000	0.000	0.000	0.000	0.000	0.000	0.000	0.000	0.000	0.000	0.000	0.000	0.000	2.40
0.000	0.000	0.000	0.000	0.000	0.000	0.000	0.000	0.000	0.000	0.000	0.000	0.000	2.45

4 CASES

Set 3, Table E — Deviations of Mean Local Pressurant Fractions, Scaling Runs 241-244

LOCATIONS I

1	2	3	4	5	6	7	8	9	10	11	12	13	TAU
0.000	0.000	0.000	0.000	0.000	0.000	0.000	0.000	0.000	0.000	0.000	0.000	0.000	0.00
.757	.485	-.065	.214	.508	.793	-.356	-.251	-.499	-.484	-.293	-.455	-.360	.05
-1.867	-1.799	-1.735	-1.486	-2.009	-2.329	1.705	1.763	1.445	1.508	1.088	2.049	1.669	.10
-2.544	-2.339	-2.008	-1.846	-2.591	-3.092	2.195	2.183	1.902	1.989	1.401	2.622	2.124	.15
-1.487	-1.349	-1.251	-1.252	-1.472	-1.540	1.671	1.161	.780	1.332	.747	1.495	1.159	.20
-1.035	-.925	-.873	-.891	-1.002	-1.045	1.227	.816	.513	.887	.494	1.074	.760	.25
-.263	-.243	-.234	-.252	-.275	-.331	.332	.241	.147	.174	.125	.402	.187	.30
-.110	-.153	-.147	-.147	-.186	-.211	.094	.113	.146	.130	.090	.273	.107	.35
-.024	-.060	-.060	-.055	-.084	-.121	.024	.027	.045	.035	-.002	.184	.100	.40
.018	-.004	-.016	-.018	-.025	-.052	-.024	-.011	-.011	.013	-.042	.107	.062	.45
.045	.016	-.006	-.033	-.029	-.027	-.065	-.016	-.004	-.006	-.027	.104	.040	.50
.022	.019	-.003	-.008	.004	.006	-.098	-.045	-.012	-.017	-.029	.115	.044	.55
.025	.021	.008	.017	.019	.036	-.138	-.074	-.001	-.027	-.032	.098	.042	.60
.045	.022	.013	.032	.055	.078	-.201	-.081	-.021	-.021	-.042	.090	.037	.65
.063	.065	.051	.062	.057	.011	-.177	-.120	-.027	-.025	-.034	.055	.016	.70
.081	.055	.043	.018	.015	.011	-.182	-.141	-.012	.013	-.028	.099	.032	.75
.076	.064	.045	.023	.044	.021	-.212	-.153	-.008	-.027	-.029	.110	.045	.80
.056	.060	.053	.068	.076	.065	-.230	-.144	-.039	-.031	-.045	.076	.038	.85
.073	.055	.034	.028	.007	-.006	-.223	-.107	.004	-.003	.007	.083	.047	.90
.051	.042	.026	.030	.032	.046	-.203	-.151	.003	-.009	-.011	.099	.055	.95
.095	.077	.051	.069	.077	.078	-.171	-.166	-.018	-.042	-.054	.015	-.016	1.00
.071	.054	.033	.023	.030	.041	-.154	-.109	-.002	-.014	-.017	.044	-.003	1.05
.028	.017	.014	.017	.030	.032	-.129	-.104	.013	.001	-.006	.059	.019	1.10
.024	.015	.014	.027	.030	.048	-.118	-.101	-.001	.004	.003	.053	-.003	1.15
.030	.019	.008	.021	.027	.057	-.088	-.089	-.004	-.010	-.014	.054	-.016	1.20
.033	.028	.019	.032	.022	.033	-.090	-.065	-.027	-.039	-.013	.060	.001	1.25
.036	.029	.023	.039	.025	.029	-.092	-.063	-.033	-.027	-.023	.079	-.029	1.30
.040	.028	.020	.023	.013	.025	-.083	-.026	-.029	-.021	-.029	.071	-.032	1.35
.034	.026	.011	.028	.028	.034	-.076	-.057	-.038	-.024	-.016	.074	-.030	1.40
.034	.029	.024	.038	.035	.048	-.084	-.073	-.038	-.034	-.015	.057	-.028	1.45
.035	.029	.021	.033	.028	.047	-.069	-.033	-.057	-.034	-.011	.032	-.027	1.50
.014	.004	-.003	.018	.021	.027	-.032	-.022	-.048	-.043	.003	.074	-.020	1.55
.004	.015	.002	.022	.004	.018	-.041	-.027	-.052	-.014	-.002	.093	-.028	1.60
.010	.011	-.003	.016	.003	.016	-.030	-.014	-.028	-.028	-.028	.098	-.028	1.65
.004	.003	.003	.016	.008	.012	-.014	-.003	-.028	-.024	-.016	.080	-.044	1.70
.007	.006	-.007	.017	.005	.017	-.022	-.010	-.008	-.008	-.008	.058	-.049	1.75
-.002	.003	.004	.006	-.001	.001	.000	.000	.000	-.008	-.012	.006	-.001	1.80
-.003	.002	0.000	.005	-.007	-.003	-.007	-.007	-.007	.005	-.001	.030	-.007	1.85
-.004	-.002	.002	.007	-.004	-.003	-.009	-.009	-.009	.003	.003	.034	-.009	1.90
-.003	-.003	-.001	.002	.001	.003	-.002	-.002	-.002	-.002	-.002	.010	-.002	1.95
0.000	0.000	0.000	0.000	0.000	0.000	0.000	0.000	0.000	0.000	0.000	0.000	0.000	2.00
0.000	0.000	0.000	0.000	0.000	0.000	0.000	0.000	0.000	0.000	0.000	0.000	0.000	2.05
0.000	0.000	0.000	0.000	0.000	0.000	0.000	0.000	0.000	0.000	0.000	0.000	0.000	2.10
0.000	0.000	0.000	0.000	0.000	0.000	0.000	0.000	0.000	0.000	0.000	0.000	0.000	2.15
0.000	0.000	0.000	0.000	0.000	0.000	0.000	0.000	0.000	0.000	0.000	0.000	0.000	2.20
0.000	0.000	0.000	0.000	0.000	0.000	0.000	0.000	0.000	0.000	0.000	0.000	0.000	2.25
0.000	0.000	0.000	0.000	0.000	0.000	0.000	0.000	0.000	0.000	0.000	0.000	0.000	2.30
0.000	0.000	0.000	0.000	0.000	0.000	0.000	0.000	0.000	0.000	0.000	0.000	0.000	2.35
0.000	0.000	0.000	0.000	0.000	0.000	0.000	0.000	0.000	0.000	0.000	0.000	0.000	2.40
0.000	0.000	0.000	0.000	0.000	0.000	0.000	0.000	0.000	0.000	0.000	0.000	0.000	2.45

4 CASES

Set 4, Table E — Deviations of Mean Local Pressurant Fractions, Scaling Runs 245-248

LOCATIONS I

1	2	3	4	5	6	7	8	9	10	11	12	13	TAU
0.000	0.000	0.000	0.000	0.000	0.000	0.000	0.000	0.000	0.000	0.000	0.000	0.000	0.00
.690	.512	.305	.304	.483	.608	-.598	-.349	-.389	-.413	-.331	-.436	-.379	.05
.687	.596	.615	.343	.544	.592	-.697	-.562	-.498	-.530	-.134	-.509	-.450	.10
-.526	-.567	-.950	-.968	-1.398	-1.249	1.934	1.178	.528	.043	.349	1.245	.389	.15
-2.755	-2.887	-4.638	-3.938	-5.712	-5.172	7.674	5.191	2.813	1.185	1.122	5.136	1.981	.20
-1.370	-1.442	-2.275	-1.959	-2.781	-2.558	3.704	2.591	1.382	.573	.570	2.546	1.020	.25
-.464	-.430	-.459	-.392	-.470	-.496	.665	.528	.250	.145	.176	.539	.407	.30
-.256	-.209	-.292	-.221	-.253	-.235	.350	.325	.123	.041	.034	.385	.205	.35
-.108	-.116	-.096	-.116	-.182	-.137	.195	.207	.048	.007	-.056	.231	.118	.40
-.017	-.028	-.069	-.077	-.137	-.092	.123	.128	-.005	-.017	-.048	.120	.113	.45
.020	-.009	-.068	-.061	-.068	-.037	.039	.057	.007	-.019	-.044	.125	.053	.50
.061	.032	0.000	-.004	-.019	-.007	-.087	-.048	-.063	-.055	-.023	.138	.070	.55
.055	.036	.025	.023	.017	.007	-.197	-.098	-.055	-.053	-.031	.155	.115	.60
.075	.078	.043	.051	.019	.023	-.201	-.098	-.032	-.047	-.051	.097	.039	.65
.061	.062	.059	.061	.065	.086	-.257	-.171	-.060	-.061	-.018	.112	.066	.70
.121	.098	.058	.053	.068	.061	-.299	-.181	-.078	-.043	-.029	.095	.067	.75
.123	.104	.087	.078	.071	.066	-.291	-.224	-.062	-.041	-.044	.074	.055	.80
.102	.071	.065	.095	.118	.132	-.326	-.215	-.071	-.043	-.004	.046	.026	.85
.145	.123	.081	.100	.122	.138	-.336	-.242	-.086	-.070	-.022	.061	-.003	.90
.123	.125	.116	.113	.127	.131	-.272	-.230	-.084	-.065	-.098	-.009	.017	.95
.136	.120	.085	.092	.090	.130	-.269	-.226	-.115	-.085	-.053	.044	.051	1.00
.080	.072	.058	.062	.067	.065	-.166	-.152	-.054	-.050	-.016	.034	-.002	1.05
.058	.046	.029	.032	.040	.044	-.107	-.123	-.026	-.020	-.022	.037	.009	1.10
.046	.033	.027	.017	.028	.049	-.096	-.096	-.014	-.027	-.021	.055	-.003	1.15
.052	.041	.038	.050	.045	.065	-.100	-.093	-.035	-.061	-.037	.065	-.026	1.20
.042	.050	.038	.065	.057	.071	-.107	-.099	-.050	-.066	-.043	.056	-.016	1.25
.039	.033	.031	.057	.043	.076	-.112	-.104	-.044	-.047	-.017	.055	-.013	1.30
.017	.018	.019	.039	.043	.048	-.095	-.071	-.038	-.038	-.023	.098	-.019	1.35
.030	.020	.002	.020	.019	.023	-.055	-.056	-.046	-.034	-.012	.087	.001	1.40
.028	.028	.012	.021	.007	.031	-.063	-.033	-.041	-.051	-.018	.096	-.017	1.45
.028	.014	.009	.026	.017	.031	-.033	-.033	-.052	-.048	-.015	.069	-.016	1.50
.023	.015	.002	.022	.028	.037	-.027	-.041	-.056	-.033	-.025	.083	-.027	1.55
.006	-.003	-.012	.013	.023	.052	-.039	-.027	-.035	-.025	-.026	.082	-.011	1.60
-.004	-.013	-.023	.002	.022	.052	-.039	-.027	-.026	-.026	-.026	.095	.012	1.65
-.013	-.014	-.037	-.008	.009	.042	-.029	-.029	-.028	-.010	-.017	.088	.043	1.70
-.007	-.011	-.016	-.002	0.000	.014	-.011	-.003	-.011	.011	-.018	.024	.024	1.75
-.006	-.008	-.012	-.001	-.001	.010	-.010	.012	-.009	.012	-.010	.012	.012	1.80
-.008	-.004	-.006	.007	-.002	.003	-.008	.014	.014	-.007	-.008	.014	-.007	1.85
-.006	-.004	-.002	.012	-.004	.002	.009	.009	.009	-.014	-.014	.009	-.008	1.90
0.000	0.000	0.000	0.000	0.000	0.000	0.000	0.000	0.000	0.000	0.000	0.000	0.000	1.95
0.000	0.000	0.000	0.000	0.000	0.000	0.000	0.000	0.000	0.000	0.000	0.000	0.000	2.00
0.000	0.000	0.000	0.000	0.000	0.000	0.000	0.000	0.000	0.000	0.000	0.000	0.000	2.05
0.000	0.000	0.000	0.000	0.000	0.000	0.000	0.000	0.000	0.000	0.000	0.000	0.000	2.10
0.000	0.000	0.000	0.000	0.000	0.000	0.000	0.000	0.000	0.000	0.000	0.000	0.000	2.15
0.000	0.000	0.000	0.000	0.000	0.000	0.000	0.000	0.000	0.000	0.000	0.000	0.000	2.20
0.000	0.000	0.000	0.000	0.000	0.000	0.000	0.000	0.000	0.000	0.000	0.000	0.000	2.25
0.000	0.000	0.000	0.000	0.000	0.000	0.000	0.000	0.000	0.000	0.000	0.000	0.000	2.30
0.000	0.000	0.000	0.000	0.000	0.000	0.000	0.000	0.000	0.000	0.000	0.000	0.000	2.35
0.000	0.000	0.000	0.000	0.000	0.000	0.000	0.000	0.000	0.000	0.000	0.000	0.000	2.40
0.000	0.000	0.000	0.000	0.000	0.000	0.000	0.000	0.000	0.000	0.000	0.000	0.000	2.45

4 CASES

DISCUSSION

For convenience of discussion, we have plotted in Figs. 6 through 9 typical data from the four sets of experiments described in Table 1. Mean local pressurant fractions for selected I locations, $\bar{X}_I$ are plotted vs dimensionless times τ. From scale-modeling considerations [2], values of τ are defined for the pressurization period as follows:

$$\tau = \bar{X}/\bar{X}_c \qquad (t < t_c)$$

and

$$\tau - 1 = (t - t_c)/\theta_c \qquad (t > t_c),$$

where t_c is the time of valve closure, $\bar{X} = \bar{X}_c$ when $t = t_c$, and

$$\theta_c = -\,[\ln\,(1 - \bar{X})/dt]^{-1}_{t=t_c}.$$

Typical error bars are given in Figs. 6 to 9 for I location number 8; they show ± 1 standard deviation. In general, these data are statistically meaningless for low values of τ, below 0.5 or 0.6. We attribute this condition at the beginning of each experimental run to the time required for control valves to open (about 2 s) and for flows to become quasi-steady. The analysis that infers local pressurant history from measured local temperature history, called the thermal method [2], assumes quasi-steady flow conditions. Response times for the bare-wire thermocouples, 0.1 mm in diameter, are conservatively 0.2 s or less; bead diameters are 2 to 2.5 times the wire diameter. Thus, these results represent engineering approximations, average values that show no turbulent structure. Even so, the data imply that the gases mix rapidly and that no pockets with large excesses of oxygen or nitrogen gas exist for any appreciable time period.

In Fig. 6, we show typical local mean pressurant mole fractions at three I-locations for experimental set 1, which had seven replicate runs. The solid line represents perfect mixing; at $\tau = 1.0$, $t = t_c$. With pressurant delivered from three 32.79-mm nozzles at Mach-1 velocities, mixing is almost instantaneous when there are no flow obstacles. These I-locations are off center, 0.6 of the distance to the

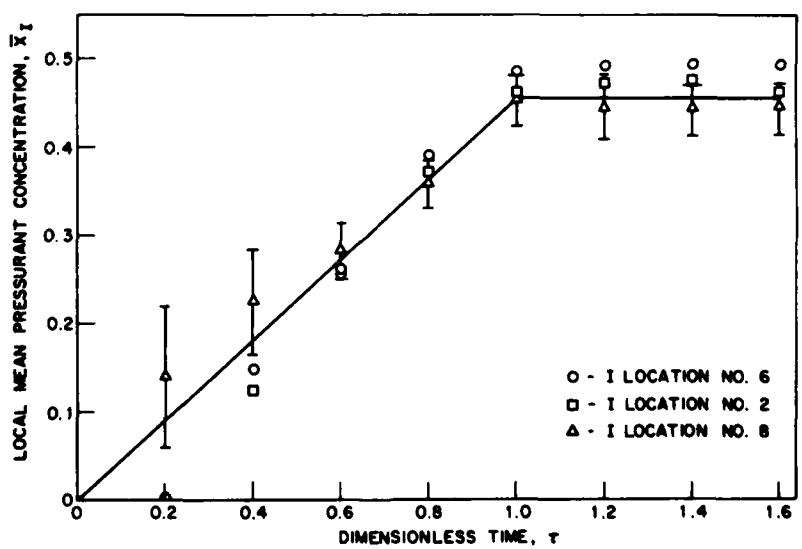

Fig. 6 — Local mean pressurant concentration (mole fraction) vs dimensionless time for three I locations of experimental set 1, off-center thermocouple-array position 1 with three nozzles and no flow obstacle

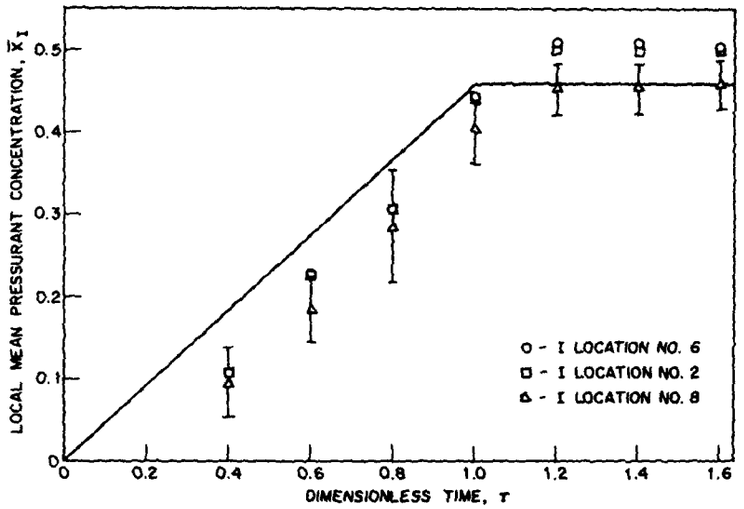

Fig. 7 — Local mean pressurant concentration (mole fraction) vs dimensionless time for three I locations of experimental set 2, chamber-centerline thermocouple-array position 2, with three nozzles and no flow obstacle

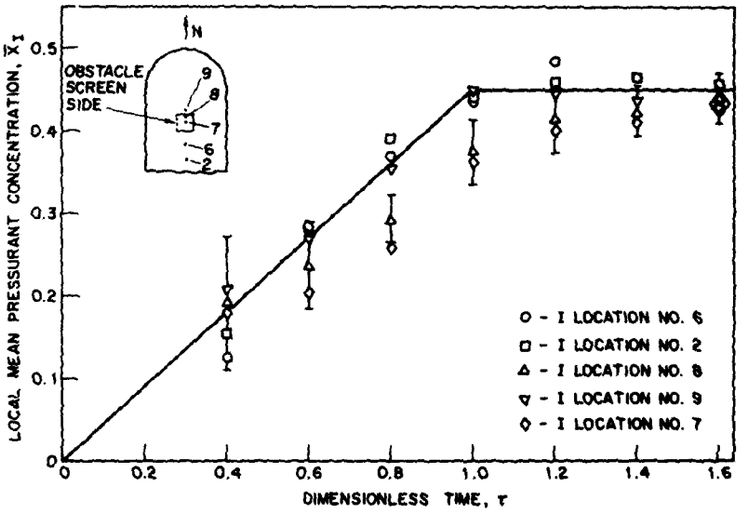

Fig. 8 — Local mean pressurant concentration (mole fraction) vs dimensionless time for five I locations of experimental set 3, centerline thermocouple-array position 2, with the south nozzle and flow obstacle, screen side facing west.

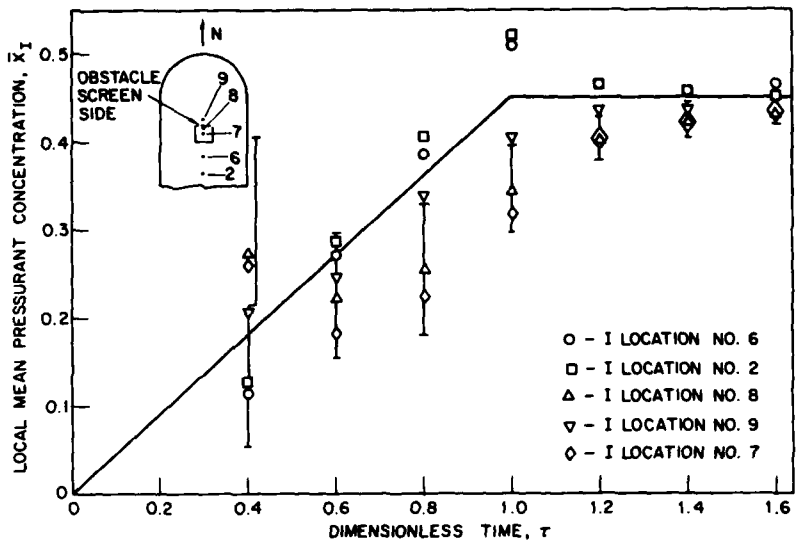

Fig. 9 — Local mean pressurant concentration (mole fraction) vs dimensionless time for five *I* locations of experimental set 4, centerline thermocouple-array position 2, with the south nozzle and flow obstacle, screen side facing north.

chamber wall. Figure 7 shows the same experimental conditions, but the *I*-locations are along the chamber centerline. Notice that mixing is less rapid here, and 1.2 injection times pass before complete mixing is indicated. These data represent set 2, which had four replicate runs. Although pressurant deficiences were small, they were statistically significant. These centerline *I*-locations were not beneath any of the three nozzles, where pressurant concentrations are high.

Experimental sets 3 and 4 were performed with a flow obstacle; Figs. 8 and 9, respectively, show typical data for them. The obstacle was a cabinetlike enclosure with top, bottom, and three sides closed; the fourth side was covered with a screen wire. As the sketches in Figs. 8 and 9 show, *I*-locations 7 and 8 are inside the obstacle and *I*-location 9 is directly behind the obstacle (see Fig. 5), relative to the south-nozzle location. Pressurant was injected only from the south nozzle in sets 3 and 4, thus giving the most severe conditions for mixing; injection times were about 30 s. With the obstacle screen side facing west, Fig. 8 shows that pressurant is mixed inside and behind the obstacle within about 1.4 injection times. With the screen side facing north, Fig. 9 shows that these conditions are met in about 1.6 injection times.

REFERENCES

1. H.W. Carhart and G.H. Fielding, "Applications of Gaseous Fire Extinguishants in Submarines," in *Proceedings of a Symposium on Appraisal of Halogenated Fire Extinguishing Agents*, National Academy of Sciences, National Research Council, Washington, D.C., Apr. 1972, pp. 239-256.

2. R.C. Corlett, J.P. Stone, and F.W. Williams, "Scale Modeling of Inert Pressurant Distribution," Fire Technology **16**, 259-272 (Nov. 1980).

3. H.S. Bean, ed., *Fluid Meters: Their Theory and Application*, 6th ed., American Society of Mechanical Engineers, New York, 1971.

4. A.S. Shapiro, "*The Dynamics and Thermodynamics of Compressible Fluid Flow*," Ronald Press, New York, 1953, Vol. 1, pp. 83-93.

5. J.P. Stone, R.C. Corlett, J.I. Alexander, and F.W. Williams, "NRL 5-m^3 Chamber Pressurization Experiment: Pressurant Concentration Histories," NRL Report 8503, Sept. 8, 1981.

6. R.C. Corlett, University of Washington, original computer programs written under Contract N00014-75-C-1085 (1979).

APPENDIX A

Programs BIGST and PRODF accept raw data tapes and produce the A-tables [6].

```
&BIGST T=00004 IS ON CR00069 USING 00075 BLKS R=0000

      FTN4
      C-----------------------------------------------------C
            PROGRAM BIGST
      C                                                     C
      C     VERSION 800721--4   BY STEVE LUSTIG             C
      C                                                     C
      C-----FUNCTIONS:------------------------------------C
      C  1) TO MAKE ASCII DISC FILES FROM EBCIDIC DATA      C
      C     LOGGER TAPES                                    C
      C  2) TO MAKE ASCII DISC FILES FROM ASCII OR          C
      C     EBCIDIC MASTER TAPE                             C
      C  3) TO BUILD ASCII MASTER TAPE FROM EBCIDIC         C
      C     DATA LOGGER TAPES                               C
      C  4) TO BUILD A 'PRODA INPUT TAPE' FROM DISC FILES   C
      C  5) TO PRINT DISC FILES ON LINEPRINTER/TERMINAL     C
      C                                                     C
      C-----MISCELLANEOUS:--------------------------------C
      C  1) THIS PROGRAM & ITS SUBROUTINES CALL:            C
      C                                                     C
      C  2) DATA LOGGERS WHICH THIS PROGRAM ACCOMODATES:    C
      C     DORIC #220 (FIXED,EBCIDIC)                      C
      C     DORIC #220 (MOBILE,EBCIDIC)                     C
      C     DORIC #240 (MOBILE,EBCIDIC)                     C
      C  3) THIS PROGRAM ASSUMES:                           C
      C     -MAXIMUM 20 CHANNELS/SCAN                       C
      C      ( 0< CHANNEL #'S < 100 )                       C
      C     -TAPE DRIVES LU8 & LU18 ARE AVAILABLE           C
      C      ON REQUEST                                     C
      C     -MASTER TAPE CHARACTER SET IS ASCII             C
      C  4) NO FUNCTION IN THIS PROGRAM IS DEPENDENT        C
      C     ON THE USER'S RUNNING ANY PREVIOUS FUNCTION     C
      C     DURING THE SAME SCHEDULING OF THIS PROGRAM      C
      C-----------------------------------------------------C
            COMMON  LU(5),NAME(3,20),NAMCNT,ICR(20),IPAST(3),IBUFR(272),
           +IDCB(272),ISCR(214)
            INTEGER BWD,IBLANK(384),ANS
            DATA IBLANK/384*2H  /
      C
      C       ----------DETERMINE LU# OF THE DEVICE------------------------
              CALL RMPAR(LU)
      C       ----------ARRAY PAST ACCOUNTS VISITED TASKS-------------------
              DO 1 I=1,3
        1     IPAST(I)=0
              NAMCNT = 0
      C       ----------DETERMINE TASK--------------------------------------
        2     WRITE(LU,5)
        5     FORMAT(1X 'ENTER:     0     TO CREATE ASCII DISC FILE'
           +/17X,'FROM ONE DATA LOGGER TAPE'
           +/17X,'OR MASTER TAPE'
           +/11X,'1     TO CREATE ASCII DISC FILES FROM'
           +/17X,'FROM 2 DATA LOGGER TAPES'
           +/11X,'2     TO CREATE A MASTER TAPE FROM DISC FILES'
           +/11X,'3     TO LIST DATA ON A PRODA INPUT TAPE'
           +/17X,'OR ON A TERMINAL/LINEPRINTER'
           +/11X,'4     TO END PROGRAM')
              READ(LU,*)MODE
              GO TO (100,100,200,300,400),MODE+1
      C
```

```
C
  100   IPAST(1)=1
C       ------------------------------------------------------------C
C       FUNCTION: TO TRANSFER A FILE (EG. DATA) OF ANY RECORD       C
C                 LENGTH FROM MT TO ONE OF THE PLATTERS             C
C         FORMAT: USER IS REQUIRED TO INPUT RECORD LENGTH           C
C                 THIS FUNCTION  USES ONLY AS MUCH SPACE AS FILE    C
C                 REQUIRES, RETURNING THE REST BACK TO FMGR.        C
C        !!MAXIMUM OF 20 CHANNELS/SCAN!!(SOUNDS REASONABLE)         C
C-------------------------------------------------------------------C
    7   ITAPE=MODE+1
C
C
        IF(ITAPE.EQ.1)WRITE(LU,15)
        IF(ITAPE.EQ.2)WRITE(LU,16)
   15   FORMAT('MOUNT TAPE ON LU 8 ..... ENTER "1" WHEN READY')
   16   FORMAT('MOUNT TAPE WITH 1ST  CHANNELS ON LU 8',
       1/'MOUNT TAPE WITH 2ND  CHANNELS ON LU 10',
       2/'ENTER "1" WHEN READY')
        READ(LU,*)IANS
C
C------CHARACTERS/RECORD FOR BUFFER
C
        WRITE(LU,35)
  35    FORMAT('ENTER # OF CHANNELS PER SCAN')
        READ(LU,*)NOCHAN
        NCHAR=(NOCHAN*11+23)
        NWORDS=(NCHAR+1)/2
        IOCBS=256
        NINTEG=NOCHAN*8+6
C
C------SKIP FILES
C
        WRITE(LU,17)
  17    FORMAT('ENTER # OF TAPE FILES TO SKIP')
        READ(LU,*)NSKIP
        IF(NSKIP.GT.0)CALL SKIP(IANS,ITAPE,NWORDS)
C
C------FILE NAME
C
        WRITE(LU,20)
  20    FORMAT('ENTER A DISC FILE NAME - 6 ASCII CHARS')
        NAMCNT = NAMCNT + 1
        READ(LU,30)(NAME(II,NAMCNT),II=1,3)
  30    FORMAT(3A2)
        WRITE(LU,40)
 40     FORMAT('ENTER PREFERRED CARTRIDGE (0 IF NO PREFERENCE)')
        READ(LU,*)(ICR(NAMCNT))
C
C       DEFINE FILE PARAMETERS FOR EXCLUSIVE OPEN, STANDARD
C       SEQUENTIAL ACCESS,WITH FILE TYPE DEFINED AT CREATION
C       (OR DEFAULT TO TYPE 3)
C
        ISIZE=-1
        IOPTN=0
        ITYPE = 3
        ISECU = 0
C
C------CALL CREAT: CREATE DISC FILE USING INFO SUPPLIED BY USER
C
```

```
0119          CALL CREAT(IDCB,IERR,NAME(1,NAMCNT),ISIZE,
0120        + ITYPE,ISECU,ICR(NAMCNT),IDCBS)
0121          WRITE(LU,21)IERR
0122   21     FORMAT(/'**CREAT MESSAGE IER=',I6)
0123          IF(IERR.LT.0)CALL ERR(IERR)
0124  C
0125  C------CALL OPEN: EXCLUSIVE OPEN, WITH STANDARDSEQUENTIAL ACESS
0126  C       SEARCH ALL CARTRIDGES FOR FILE, RETURNING SUCCESS OF OPEN
0127  C       IN IER
0128  C
0129          CALL OPEN(IDCB,IERR,NAME(1,NAMCNT),IOPTN,ISECU,ICR(NAMCNT),
0130        + IDCBS)
0131          WRITE(LU,22)IERR
0132   22     FORMAT(/'**OPEN MESSAGE IER=',I3)
0133          IF(IERR.LT.0)CALL ERR(IERR)
0134  C
0135  C------THIS LOOP WILL READ IN DATA FROM TAPE,
0136  C       TRANSFER IT TO THE DISC, AND TEST RECORD
0137  C
0138          IRNO = 0
0139          ITPNO = 8
0140  C
0141  C-----TYPE TAPE CHARACTER SET
0142  C
0143         ICNVRT=0
0144         IF (ITAPE.NE.1) GOTO 31
0145   28    WRITE(LU,29)
0146   29    FORMAT(' FOR SINGLE TAPE CHARACTER SET:'
0147        +/2X,"ENTER '0' FOR EBCIDIC "
0148        +/8X,"'1' FOR ASCII")
0149         READ(LU,*)ICNVRT
0150         IF((ICNVRT.NE.0).AND.(ICNVRT.NE.1))GOTO28
0151   31    WRITE(LU,86)
0152   86    FORMAT('**WAIT FOR TAPE READ')
0153  C
0154  C
0155          DO  97 LOOP=1,ITAPE
0156               IF(LOOP.EQ.2)ITPNO=10
0157  C
0158  C----------------GET A RECORD OF SIZE IDCBS
0159  C
0160   44                CALL EXEC(1,ITPNO,IBUFR,NWORDS)
0161  C
0162  C----------------CHECK IF END OF TAPE FILE
0163  C
0164                    CALL EXEC(13,ITPNO,ISTAT)
0165                    ISTAT = IAND(ISTAT,40200B)
0166                    IF(ISTAT.NE.200B)GO TO 47
0167                    IF(ITAPE.EQ.1.OR.LOOP.EQ.2)GO TO 97
0168                    CALL WRITF(IDCB,IERR,IBLANK,NWORDS)
0169                    GO TO 97
0170  C
0171  C----------------CONVERT SCAN TO ASCII
0172  C
0173   47               IF(ICNVRT.NE.0) GOTO 32
0174               CALL EBCAS(IBUFR,NWORDS)
0175  C----------------CHECK IF RECORD IS A GOOD ONE
0176  C
0177   32               CALL CODE(NCHAR)
0178                    READ(IBUFR,41)(ISCR(J),J=1,NINTEG)
```

```
                    CONTINUE
 41                 FORMAT(13X,3(2I1,1X),20(2X,2I1,1X,6I1),1X)
                    DO 14 K=1,NINTEG
                    BAD=1
                    DO 95 J=0,9
                    IF(ISCR(K).EQ.J)BAD=0
 95                 CONTINUE
C                   IF BAD=1, THROW AWAY SCAN
                    IF(BAD.NE.1) GO TO 14
                    WRITE(LU,50)(IBUFR(IJ),IJ=1,NWORDS)
 50                 FORMAT('**BAD INPUT*LINE BEING DISCARDED',(' ',249A2))
                    GO TO 44
 14                 CONTINUE
C
C
C----------------WRITE RECORD TO DISC FILE
C
 60                 CALL WRITF(IDCB,IERR,IBUFR,NWORDS)
                    IF(IERR .LT. 0) CALL ERR(IERR)
                    IRNO = IRNO + 1
                    GO TO 44
 97                 CONTINUE
C
C
C------CALL LOCF: EXECUTION OF THE NEXT STATEMENTS RELEASES THE UNUSED
C       PORTION OF THE CR HELD BY THIS ROUTINE
C
        CALL LOCF(IDCB,IERR,IREC,IRB,IOFF,JSEC)
        WRITE(LU,98)IERR
 98     FORMAT('**LOCF MESSAGE IER= ',I6)
        IF(IERR.LT.0)CALL ERR(IERR)
        ITRUN=JSEC/2-IRB-1
C
C------CALL CLOSE: TRUNCATING THE UNUSED PORTION OF THE CR.
C
        CALL CLOSE(IDCB,IERR,ITRUN)
        WRITE(LU,66)IERR
  66    FORMAT('**CLOSE MESSAGE IER=',I6)
        IF(IERR.LT.0)CALL ERR(IERR)
C
        WRITE(LU,65)IRNO,(NAME(N,NAMCNT),N=1,3)
65      FORMAT('**',I6,' RECORDS WRITTEN TO FILE ',3A2)
C
        WRITE(LU,70)
   70   FORMAT(' TRANSFER ANOTHER FILE ? (Y\N)')
        READ(LU,201)IANS
        IF(IANS.EQ.1HY)GO TO 7
C
        GOTO2
 200  IPAST(2)=1
C-------------------------------------------------------C
C                   OLD MASTR                           C
C       THIS SECTION ALLOWS THE USER TO SAVE DISC       C
C       FILES ONTO A MASTER TAPE.  THIS MASTER TAPE     C
C       CAN LATER BE USED AS INPUT TO THIS PROGRAM.     C
C       DISC FILES NEED NOT HAVE BEEN CREATED DURING    C
C       THIS SCHEDULE OF BICST. MASTER TAPE ASSUMED ASCII C
C-------------------------------------------------------C
        IF(IPAST(1).EQ.0) GOTO 23
C
```

```
C
      WRITE(LU,3)
 3    FORMAT('TO TRANSFER DISC FILES MOUNT MASTER TAPE ON LU0'
     + /1X,'AND ENTER AN INTEGER WHEN READY')
      READ(LU,*)IANS
C
C
      DO 101 I=1,NAMCNT
C
C----------PROMPT WITH NAMES OF FILES CREATED SO FAR
C
            WRITE(LU,11)(NAME(II,I),II=1,3)
 11         FORMAT('TRANSFER FILE ',3A2,' ?  (Y\N)')
            READ(LU,201) ANS
            IF(ANS.EQ.1HN) GOTO 101
C
C----------TRANSFER THE I'TH FILE ON THE LIST
C
            CALL TRANS(I)
C
101   CONTINUE
C
C
      WRITE(LU,27)
 27   FORMAT('XFER A PREVIOUS FILE? (Y/N)')
      READ(LU,201)ANS
 201  FORMAT(A1)
      IF (ANS.NE.1HY) GOTO2
C
C-----TRANSFER FILES CREATED PREVIOUSLY OUTSIDE THIS SCHEDULE
C     FILES ARE ASSUMED ALL READY EDITED & CONVERTED
C
 23   WRITE(LU,13)
 13   FORMAT(1X,'MASTER TAPE SHOULD BE ON LU 0')
      NAMCNT=NAMCNT+1
      WRITE(LU,24)
 24   FORMAT('ENTER FILE NAME--6 ASCII CHARACTERS')
      READ(LU,30)(NAME(II,NAMCNT),II=1,3)
      WRITE(LU,25)
 25   FORMAT('ENTER CARTRIDGE #')
      READ(LU,*)(ICR(NAMCNT))
      WRITE(LU,26)
      CALL TRANS(NAMCNT)
 26   FORMAT('TRANSFER ANOTHER FILE? (Y/N)')
      READ(LU,201)ANS
      IF(ANS.NE.1HN) GOTO 23
C
C
      GO TO 2
 300  IPAST(3)=1
C-----------------------------------------------------------C
C     THIS SECTION ALLOWS THE USER TO MAKE A                C
C     PRODA INPUT TAPE FROM DISC FILES CREATED              C
C     DURING PAST AND CURRENT RUNS OF THE PROGRAM.          C
C     THE USER MAY USE EITHER TAPE DRIVES FOR OUTPUT.       C
C     THE USER MAY ALSO SIMPLY PRINT THE OUTPUT ON          C
C     ANY TERMINAL OR PRINTER                               C
C-----------------------------------------------------------C
      WRITE(LU,4)
 4    FORMAT(' TO CREATE PRODA INPUT TAPE FROM DISC FILES:'
```

```
     + /5X,'MOUNT PRODA TAPE ON A TAPE DRIVE &'
     + /5X,'ENTER THE LUN OF THE TAPE WHEN READY.'
     + /1X,'TO LIST THE OUTPUT ELSEWHERE:'
     + /5X,'ENTER THE LU NUMBER WHEN READY.')
      READ(LU,*)IOUTDV
C
      IF((IPAST(1).EQ.0).AND.(IPAST(2).EQ.0)) GOTO 19
 39   DO 103 I=1,NAMCNT
C
C---------PROMPT WITH NAMES OF FILES CREATED SO FAR
C
            WRITE(LU,6)(NAME(II,I),II=1,3)
 6          FORMAT('TRANSFER FILE ',3A2,' ? (Y\N)')
            READ(LU,201) ANS
            IF(ANS.EQ.1HN) GO TO 103
C
C---------WRITE OUT THE I'TH FILE ON THE LIST
C
            CALL OUTPR(I,IOUTDV)
C
C---------OPEN & THEN PURGE THIS DISC FILE
C
            CALL OPEN(IDCB,IERR,NAME(1,I),0,0,ICR(I))
            IF(IERR.LT.0)CALL ERR(IERR)
D           CALL PURGE(IDCB,IERR,NAME(1,I),0,ICR(I))
D           IF(IERR.LT.0) CALL ERR(IERR)
C
 103  CONTINUE
C
C-----TRANSFER FILES WHICH WERE NOT CREATED DURING THIS
C           SCHEDULE
C
 19   NAMCNT=0
      WRITE(LU,34)
 34   FORMAT('TRANSFER PREVIOUSLY CREATED FILE? (Y\N)')
      READ(LU,201) ANS
      IF(ANS.EQ.1HN) GOTO 36
      NAMCNT=NAMCNT+1
      WRITE(LU,37)
 37   FORMAT('ENTER FILE NAME--6 ASCII CHARACTERS')
      READ(LU,30) (NAME(II,NAMCNT),II=1,3)
      WRITE(LU,38)
 38   FORMAT('ENTER CARTRIDGE #')
      READ(LU,*)(ICR(NAMCNT))
      GOTO 39
C
C
 36   IF ((IOUTDV.NE.8).AND.(IOUTDV.NE.18)) GOTO 2
C
C-----WRITE OUT 'END OF TAPE' MARK (WILL BE USED BY PRODA).
C
      WRITE(IOUTDV,75)
      ENDFILE IOUTDV
C     CALL EXEC(3,10,IOUTDV)
 75   FORMAT('XXXX')
C
      GOTO 2
C
C
C-----------------------------------------------------------C
```

```
C            END PROGRAM                                          C
C-------------------------------------------------------------C
 400  WRITE(LU,401)
 401  FORMAT('END OF BIGST')
      STOP
      END
C
C
C*************************************************************C
      SUBROUTINE OUTPR(NUM,IOUTDV)
C
C     THIS SUBROUTINE TRANSFERS THE NUM'TH FILE ON THE LIST
C     TO THE OUTPUT MEDIUM.
C
C
      COMMON LU(5),NAME(3,20),NAMCNT,ICR(20),IPAST(3)
      INTEGER HTIME,MTIME,STIME,ICHAR(550),ICHAN(20)
      INTEGER IDCB(272),ITITLE(40),NCHAN(20)
      INTEGER IPOW(20)
      REAL STORE(20),OUT(20)
      DATA IBLANK/384*2H  /,IDCBS/256/
C
C     INITIALIZE ARRAYS
C
      DO 2 I = 1 , 40
 2    ITITLE(I) = IBLANK
C
C     OPEN THE FILE
C
      CALL OPEN(IDCB,IERR,NAME(1,NUM),0,0,ICR(NUM),IDCBS)
      IF(IERR.LT.0) CALL ERR(IERR)
C
C     GET INFORMATION ABOUT THE LOGGERS
C
 9    WRITE(LU,10)
 10   FORMAT(' ENTER # OF CHANNELS, & CHANNEL #S (I2)')
      READ(LU,3)NCHAN,(ICHAN(I),I=1,NCHAN)
      NCHAR=NCHAN*(1+2)
 3    FORMAT(2I,I2,1X))
      IF(NCHAN GT.20) GO TO 9
C
       DO 4 I = 1 , 20
 4      OUT(I) = 0.0
C
 41   WRITE(LU,15)
 15   FORMAT('ENTER TITLE FOR THIS FILE (UP TO 80 CHARS)')
      READ(LU,20) (ITITLE(I), I = 1, 40)
 20   FORMAT(40A2)
C
C     WRITE OUT THE HEADER TO OUTPUT LU
C
      WRITE(IOUTDV,25) (ITITLE(I), I = 1, 40)
      WRITE(IOUTDV,30)(ICHAN(I),I=1,NCHAN)
      WRITE(IOUTDV,35)
 25   FORMAT(1X,40A2)
 30   FORMAT('0 CHANNELS ',20(7X,I2))
 35   FORMAT('0 TIME')
C
C     READ A RECORD
C
```

```
 37   CALL READF(IDCB,IERR,ICHAR,550,LEN)
            IF(IERR.LT.0)CALL ERR(IERR)
            IF(LEN.EQ.-1)GO TO 70
C
            IF(ICHAR.NE.IBLANK)GO TO 39
C
C                 WRITE(IOUTDV,75)
C                 WRITE(LU,38)
C38               FORMAT('SECOND GROUP OF CHANNELS WILL BE'
C     1           ,' PROCESSED NOW.'/'FOR SECOND GROUP OF'
C     2           ,' CHANNELS, PLEASE')
C                 GO TO 9
C
C           CONVERT ASCII STRING TO INTEGERS AND REALS
C
 39         CONTINUE
            CALL CODE(2*LEN)
            READ(ICHAR,40)NTIME,MTIME,STIME,(KCHAN(I),STORE(I),
     1                          IPOW(I), I = 1, NCHAN)
 40         FORMAT(13X,3(I2,1X),20(2X,I2,1X,F5.5,I1),1X)
C
C           MULTIPLY BY APPROPRIATE POWER OF 10
C
            DO 50 I = 1 , NCHAN
 50         STORE(I) = STORE(I)*(10.0**(3-IPOW(I)))
C
C           WRITE DATA OUT TO RIGHT LU
C
            WRITE(IOUTDV,66)NTIME,MTIME,STIME,(STORE(JK), JK = 1, NCHAN)
 66         FORMAT(1H ,2X,I2,':',I2,':',I2,20(3X,F7.1))

C
 70   WRITE(IOUTDV,75)
 75   FORMAT(1H1,110X)
C
      CALL CLOSE(IDCB,IERR)
      IF(IERR.LT.0)CALL ERR(IERR)
C
      RETURN
      END
C*************************************************************C
      SUBROUTINE SKIP(NUM,ITAPE,NWDS)
      INTEGER NUM,ITAPE,IBUFR(384)
C
      ITPNO = 0
C
      DO 100 I = 1 , ITAPE
        IF(I.EQ.2)ITPNO = 18
        DO 50 J = 1 , NUM
 25       REC = EXEC(1,ITPNO,IBUFR,NWDS)
          REC = EXEC(13,ITPNO,ISTAT)
          ISTAT = IAND(ISTAT,040200B)
          IF(ISTAT.EQ.0) GO TO 25
 50     CONTINUE
 100  CONTINUE
C
      RETURN
      END
C*************************************************************C
      SUBROUTINE ERR(IERR)
```

```
C
C       THIS SUBROUTINE PRINTS THE ERROR CODE PASSED TO IT
C
        COMMON LU(5),NAME(3,20),NAMCNT,ICR(20),IPAST(3)
        INTEGER ANS
        WRITE(LU,10)IERR
 10     FORMAT('  IERR = ',I6,'ABORT PROGRAM? (Y/N)')
        READ(LU,201) ANS
 201    FORMAT(A1)
        IF(ANS.NE.1HY) RETURN
        STOP
        END
C
C*************************************************************C
        SUBROUTINE TRANS(NUM)
C
C       THIS SUBROUTINE TRANSFERS THE N'TH FILE ON THE
C       LIST TO THE MASTER TAPE
C
        DIMENSION IDCB(272),IBUFR(272),ISCR(166)
        COMMON LU(5),NAME(3,20),NAMCNT,ICR(20).IPAST(3)
C
C       OPEN THE FILE
C
        CALL OPEN(IDCB,IERR,NAME(1,NUM),IDUM,IDUM,ICR(NUM),256)
        IF(IERR.LT.0) CALL ERR(IERR)
C
C       READ A RECORD
C
 5      CALL READF(IDCB,IERR,IBUFR,256,LEN)
              IF(IERR.LT.0)CALL ERR(IERR)
              IF(LEN.LT.0) GOTO 50
C
C             CHECK IF RECORD IS GOOD
C
              NCHAN=(LEN-23)/11
              NINTEG=NCHAN*8+6
              CALL CODE(LEN)
              READ(IBUFR,41)(ISCR(J),J=1,NINTEG)
 41           FORMAT(13X,3(2I1,1X),20(2X,2I1,1X,6I1),1X)
              DO 14 K=1,NINTEG
              IBAD=1
              DO 95 I=0,9
              IF(ISCR(K).EQ.I) IBAD=0
 95           CONTINUE
              IF (IBAD.EQ.1) GO TO 5
 14           CONTINUE
C
C             WRITE IT OUT
C
              REG=EXEC(2,0,IBUFR,LEN)
              GOTO 5
C
C       WRITE EOF ON TAPE  & AND CLOSE THE DISC FILE
C
 50     REG=EXEC(3,0110B)
        CALL CLOSE(IDCB)
        RETURN
        END
C*************************************************************C
```

```
      SUBROUTINE EBCAS(ICHAR,LEN)
C
C     THIS SUBROUTINE CONVERTS A BUFFER OF EBCIDIC
C     CHARACTERS ( CONTAINED IN AN INTEGER ARRAY),
C     FROM THE DATA LOGGER, INTO ASCII.
C
      DIMENSION ICHAR(550)
      INTEGER RCHAR,LCHAR
C
C
      DO 100 I = 1 , LEN
C
C        GET RIGHT BYTE & CONVERT IT
C
         RCHAR = IAND(ICHAR(I),077B)
            IF(RCHAR.EQ.040B)RCHAR = 055B
            IF(RCHAR.EQ.0)RCHAR = 040B
C
C        GET LEFT BYTE & CONVERT IT
C
         LCHAR = IAND(ICHAR(I),037400B)
            IF(LCHAR.EQ.020000B)LCHAR = 026400B
            IF(LCHAR.EQ.0)LCHAR = 020000B
C
C        PACK THE TWO BYTES BACK TOGETHER AGAIN
C
         ICHAR(I) = IOR(LCHAR , RCHAR)
C
  100 CONTINUE
C
C
      RETURN
C*****************************************************C
      END
```

```
&PRODF T=00003 IS ON CR00056 USING 00074 BLKS R=0000

0001  FTN4
0002  C    NOTE!! THIS IS A MODIFIED FORM OF PRODA TO HANDLE LONGER DUMP TIME
0003  C    IT SHOULD BE USED WITH &CINFF AND &CINSF.
0004  C
0005  C    THIS IS THE FIRST OF THREE PROGRAM FOR REDUCING
0006  C    EXPERIMENTAL DATA.  INPUT IS ON TAPE UNIT 18.
0007  C    OUTPUT IS TO A DISK FILE.   SOME OUTPUT IS ALSO
0008  C    SENT TO THE  LINE PRINTER AND TAPE UNIT 8
0009  C    SIMULTANEOUSLY.  THIS PROGRAM'S OUTPUT (DISK FILE)
0010  C    IS USED AS INPUT TO CINFER.
0011  C    THIS PROGRAM IS CONSTRUCTED TO HANDLE A MAXIMUM OF 20
0012  C    CHANNELS WITH A TOTAL OF 350 SCANS OF DATA PER CHANNEL.
0013  C    THIS IS AVERAGED DATA SO IT CORRESPONDS TO 350 SECONDS.
0014  C    IN ORDER TO PUT THE FULL 350 SCANS INTO THE OUTPUT DISC FILE,
0015  C    THE VARIABLE NTH MUST BE CHANGED(SEE LINE 725).
0016  C
0017  C    NOTE!!!!! THIS PROGRAM HAS TO BE MODIFIED DEPENDING WHETHER THE
0018  C              DATA IS FROM THE 200 OR 10000 CU FT CHAMBER. SEE LINES
0019  C              296, 301 AND 306. THE LOGIC FUNCTION SWITCH, CHANNEL
0020  C              63 IS DIFFERENT,LINE 306. THE PRESSURE TRANSDUCERS
0021  C              OUTPUT IS DIFFERENT IN THE TWO CHAMBERS.
0022  C
0023  C              THE CONSTANTS FOR NOZZLE DIAMETER AND CHAMBER VOLUME
0024  C              AN AND VT RESPECTIVELY MUST BE MODIFIED.
0025  C
0026  C       DOCUMENTED BY ALAN BRODER   3/3/80
0027  C       COMMENTED BY ANDREA HUNTER  7-30-80
0028  C       MODIFIED BY FRED W  WILLIAMS 810408
0029  C
0030        PROGRAM PRODF
0031        DOUBLE PRECISION AG
0032        REAL NT1,NT2,NT(350)
0033        INTEGER AK2(140)
0034        DIMENSION AK(70),IBUF(144),NAME(3),ISIZE(2),X(350,20)
0035        INTEGER AC(5),IOBUF(100)
0036        DIMENSION A(40),NC(20),X1(20),X2(20),IS(50
0037       10),XT(20),NCT(20)
0038        LOGICAL F,FLAG,F2
0039        COMMON IPAR(5)
0040        EQUIVALENCE (AK2,AK)
0041        DATA XES/4HXXXX/
0042        DATA IBLANK/2H  /
0043  C
0044  C*****************************************************
0045  C*            VARIABLE DEFINITIONS                   *
0046  C*  A-TITLE OF FILE                                  *
0047  C*  AC-'CHANNEL'                                     *
0048  C*  IS-FUNCTION SWITCH                               *
0049  C*  NAME-UNIQUE NAME ISSUED TO OUTPUT FILE           *
0050  C*  NC-CHANNEL NUMBERS                               *
0051  C*  NT-TIMES FOR EACH SCAN                           *
0052  C*  NT1-BEGINNING TIME OF RUN                        *
0053  C*  NT2-TIME OF CURRENT SCAN                         *
0054  C*  X,X1,X2-DATA PER SCAN                            *
0055  C*                                                  *
0056  C*****************************************************
0057  C
0058  C
```

```
      IOUT=8
C
C
C
C  READ IN AND WRITE OUT FILE LABEL AND CHANNEL NUMBERS
C
      CALL RMPAR(IPAR)
      WRITE(IPAR(1),1000)
1000  FORMAT('$GIVE CARTRIDGE #,OUTPUT FILE NAME
     1.'(I5,A6)')
      READ(IPAR(1),1002)ICR,NAME
1002  FORMAT(I5,1X,3A2)
      ISIZE(1) = -1
      ITYPE = 3
C
C     CREATE A DISK FILE
C
      CALL CREAT(IBUF,IERR,NAME,ISIZE,ITYPE,IDUN,ICR)
      IF(IERR.LE.0)CALL ERR(IERR,37)
      CALL OPEN(IBUF,IERR,NAME)
1005  READ(18,1)(A(I),I=1,20)
C
C    CHECK IF WE HAVE REACHED THE END OF FILE
C
      IF(A(1) EQ XES)GO TO 9090
 1    FORMAT(20A4)
      READ(18,2)AC,(X1(I),I=1,10)
 2    FORMAT(1X,5A2,10F10.1)
      DO 3 I=1,10
 3    NC(I)=X1(I)
C     WRITE(IOUT,4)(A(I),I=1,20),AC,(NC(I),I=1,10)
 4    FORMAT(1H1,20A4//1H ,5A2,10I6/11H    I    TIME)
C
C  SKIP A LINE OF INPUT
C
      READ(18,55)GAR1,GAR2,GAR3
 55   FORMAT(3A4)
C
C  READ IN TIME AND 1ST 10 COLUMNS OF DATA FOR THAT TIME
C
      READ(18,5)MH,AH,MM,AM,MS,(X1(I),I=1,10)
 5    FORMAT(1X,I4,A1,I2,A1,I2,10F10.1)
C
C  CONVERT TIME TO TIME IN SECONDS
C
      NT1=MS+MM*60.+MH*3600.
C
C  F WILL BE SET WHEN THERE IS NO DATA LEFT
C
      F= FALSE.
C
C  J WILL POINT TO CURRENT LINE OF DATA IN THE X ARRAY
C
      J=0
C
C  READ IN DATA, CONVERT TIME TO SECONDS
C
 6    READ(18,5)MH,AH,MM,AM,MS,(X2(I),I=1,10)
      NT2=MS+MM*60.+MH*3600.
      IF(NT2.EQ.0.0)F=.TRUE.
```

```
C
C  IF BAD DATA GO BACK FOR MORE
C
      IF(NT2.GT.NT1+2.OR.(NT2.LT.NT1 AND..NOT.F))GO TO 6
C
C  GO TO 8 IF YOU HAVE TO INTERPOLATE
C
      IF(NT2.NE.NT1)GO TO 8
C
C  AVERAGE DATA AND GO BACK FOR NEXT LINE IF NOT EOF
C
      DO 7 I=1,10
 7    X1(I)=0.5*(X1(I)+X2(I))
      IF(F)GO TO 100
      GO TO 6
C
C  STORE GOOD LINE OF DATA IN X ARRAY,CREATE NEXT GOOD LINE,
C  (INTERPOLATING IF NECESSARY), WRITE OUT LINE JUST STORED
C  IN X ARRAY THIS IS DATA ONLY, TIME IS STORED IN NT.
C
 8    J=J+1
      NT(J)=NT1
C
C     DT-DIFFERENCE IN BEGINNING TIME AND CURRENT SCAN TIME
C
      DT=NT2-NT1
      DO 9 I=1,10
      X(J,I)=X1(I)
 9    X1(I)=X1(I)+(X2(I)-X1(I))/DT
      NT1=NT1+1
C     WRITE(IOUT,10)J,NT(J),(X(J,I),I=1,10)
 10   FORMAT(1H ,I3,F7.0,10F6.1)
      IF(NT2.GT.NT1)GO TO 8
      IF(F)GO TO 100
      GO TO 6
C
C  NJ WILL POINT TO BOTTOM OF DATA IN X ARRAY
C
 100  NJ=J
C
C  NOW DO SAME THINGS TO 2ND 10 COLUMNS OF DATA FOR
C  THE SAME TIMES.
C
      READ(18,1)(A(I),I=21,40)
      READ(18,2)AC,(X1(I),I=11,20)
      DO 101 I=11,20
 101  NC(I)=X1(I)
C     WRITE(IOUT,4)(A(I),I=21,40),AC,(NC(I),I=11,20)
C
C     SKIP A LINE OF INPUT
C
      READ(18,55)GAR1,GAR2,GAR3
C
C     READ IN TIME AND 2ND 10 COLUMNS OF DATA FOR THAT TIME
C
 102  READ(18,5)MH,AH,MM,AM,MS,(X1(I),I=11,20)
C
C     CONVERT TIME TO TIME IN SECONDS
C
      NT1=MS+MM*60.+MH*3600.
```

```
0179          IF(NT1 LT.NT(1))GO TO 102
0180    C
0181    C     F WILL BE SET WHEN THERE IS NO DATA LEFT ALSO F2
0182          F=.FALSE.
0183          F2 = .FALSE.
0184          J=NT1-NT(1)
0185          NJ0=J+1
0186    C
0187    C     READ IN DATA ,CONVERT TIME TO SECONDS
0188    C
0189     103  READ(18,5)MH,AH,MM,AM,MS,(X2(I),I=11,20)
0190          NT2=MS+MM*60.+MH*3600.
0191          IF(NT2.GT.NT1+2)GO TO 103
0192          IF(NT2.EQ.0)F2=.TRUE.
0193    C
0194    C     GO TO 105  IF YOU HAVE TO INTERPOLATE
0195    C
0196          IF(NT2.NE.NT1)GO TO 105
0197    C
0198    C     AVERAGE DATA AND GO BACK FOR NEXT LINE IF NOT EOF
0199    C
0200          DO 104 I=11,20
0201     104  X1(I)=0.5*(X1(I)+X2(I))
0202          GO TO 103
0203    C
0204    C     STORE GOOD LINE OF DATA IN X ARRAY, CREATE NEXT GOOD LINE,
0205    C     (INTERPOLATING IF NESSACARY),WRITE OUT LINE JUST STORED
0206    C     IN X ARRAY.
0207    C
0208     105  J=J+1
0209          IF(J.GT.NJ)F=.TRUE.
0210          NT(J)=NT1
0211          DT=NT2-NT1
0212          DO 106 I=11,20
0213          X(J,I)=X1(I)
0214     106  X1(I)=X1(I)+(X2(I)-X1(I))/DT
0215          NT1=NT1+1
0216    C     WRITE(IOUT,10)J,NT(J),(X(J,I),I=11,20)
0217          IF(NT2.GT.NT1)GO TO 105
0218          IF(.NOT.(F.OR.F2))GO TO 103
0219          IF(F2)GO TO 108
0220     107  READ(18,5)MH,AH,MM,AM,MS
0221          IF(MH.NE.0.OR.MM.NE.0.OR.MS.NE.0)GO TO 107
0222    C
0223    C  NJM WILL NOW POINT TO BOTTOM OF LAST COMPLETE SET OF DATA
0224    C  (COMPLETE = ALL 20 COLUMNS OF DATA). IT IS DETERMINED WHETHER CHANNELS
0225    C  60-69 OR 70-79 HAS THE LEAST NUMBER OF SCANS AND IS RETURNED TO NJM.
0226    C
0227     108  NJM=NJ
0228          IF(J.LT.NJ)NJM=J
0229    C
0230    C  PRINT OUT HEADINGS AND COLUMN HEADINGS WITH
0231    C  CHANNEL NUMBERS REARRANGED.
0232    C
0233    C*****************************************************************
0234    C*  THIS IS THE ARRANGEMENT OF CHANNEL NUMBERS IN ONE ARRAY, THE  *
0235    C*  SECOND ARRAY CONTAINS THE CHANNEL NUMBERS REARRANGED IN A     *
0236    C*  PRE-DETERMINED ORDER.                                         *
0237    C*---------------------------------------------------------------*
0238    C*              DEFINITION OF HEADERS                            *
```

```
C*   CHANNEL NUMBERS-CHANNELS 60-79                                    *
C*   ARRAY #1-(NC) THE ORIGINAL ORDER OF CHANNEL NUMBERS IN             *
C*                    ASCENDING ORDER                                  *
C*   ARRAY #2-(NCT) ALTERED ORDER OF CHANNEL NUMBERS                    *
C*   LOCATION- THE POSITION OF PURPOSE OF CHANNEL NUMBERS               *
C*-------------------------------------------------------------------*
C*-------------------------------------------------------------------*
C*   ARRAY #1      CHANNEL NUMBER      ARRAY #2      LOCATION          *
C*   --------      --------------      --------      --------          *
C*     NC(1)             60             NCT(1)       PRESSURE          *
C*     NC(2)             61             NCT(3)       PRESSURE          *
C*     NC(3)             62             NCT(10)      TEMPERATURE(C)    *
C*     NC(4)             63               *          FUNCTION          *
C*     NC(5)             64             NCT(16)      TEMPERATURE(C)    *
C*     NC(6)             65             NCT(15)      TEMPERATURE(C)    *
C*     NC(7)             66             NCT(14)      TEMPERATURE(C)    *
C*     NC(8)             67             NCT(13)      TEMPERATURE(C)    *
C*     NC(9)             68             NCT(12)      TEMPERATURE(C)    *
C*     NC(10)            69             NCT(11)      TEMPERATURE(C)    *
C*     NC(11)            70             NCT(2)       NOZZLE ENTRANCE   *
C*     NC(12)            71             NCT(6)       TEMPERATURE(C)    *
C*     NC(13)            72               *          TANK 1 EXIT       *
C
C*     NC(14)            73               *          NOZZLE THROAT     *
C*     NC(15)            74             NCT(7)       TEMPERATURE(C)    *
C*     NC(16)            75             NCT(5)       TEMPERATURE(C)    *
C*     NC(17)            76             NCT(8)       TEMPERATURE(C)    *
C*     NC(18)            77             NCT(4)       TEMPERATURE(C)    *
C*     NC(19)            78             NCT(9)       TEMPERATURE(C)    *
C*     NC(20)            79               *          TANK 1            *
C*-------------------------------------------------------------------*
C*NOTE:*****************************************************************
C* (*) INDICATES NO CORRESPONDENCE TO THIS LOCATION                    *
C*-------------------------------------------------------------------*
C*******************************************************************
C
      NCT(1)=NC(1)
      NCT(2)=NC(11)
      NCT(3)=NC(2)
      NCT(4)=NC(18)
      NCT(5)=NC(16)
      NCT(6)=NC(12)
      NCT(7)=NC(15)
      NCT(8)=NC(17)
      NCT(9)=NC(19)
      NCT(10)=NC(3)
      NCT(11)=NC(10)
      NCT(12)=NC(9)
      NCT(13)=NC(8)
      NCT(14)=NC(7)
      NCT(15)=NC(6)
      NCT(16)=NC(5)
C     WRITE(IOUT,200)(A(I),I=1,20),(NCT(I),I=1,16),(I,I=1,16)
 200  FORMAT(1H1,1X,20A4/18H0CHANNEL OF ORIGIN,I4,15I6/1H ,5X1HI,9X,16I6
     1,6H VALVE/,0H    J   TIME)
C
C  REARRANGE THE ORDER OF THE COLUMNS OF DATA.
C  ALSO MOVE THE FIRST GOOD ROW OF DATA TO THE
C  TOP OF THE ARRAY  THEN DUMP OUT DATA TO THE
C  LINE PRINTER  (THE DO 202 LOOP SCALES
```

```
C  CHANNELS 60 AND 61 AND SETS ARRAY IS(N) WHEN
C  THE NOZZLE IS ON.)
C
C
C   WRITE THE VALUE OF NJO
C
          WRITE(IPAR(1),1111)NJO,NJM
1111      FORMAT("NJO=",I8,"NJM=",I8)
        DO 206 K=NJO,NJM
        J=K+1-NJO
        NT(J)=NT(K)
        IS(J)=0
        DO 202 I=1,20
C
C       CONVERT TANK 1 (CHANNEL 60) TRANSDUCER TO PASCAL'S
C       PER SQUARE METER PRESSURE, FOR THE 200 CU FT CHAMBER THE MULT
C       FACTOR IS 0.15 WHERE AS FOR THE 10,000 CU FT CHAMBER THE FACTOR
C       IS 0.1
C
        IF(NC(I).EQ.60)X(K,I)=X(K,I)*0.15/14.7
C
C       CONVERT CHAMBER(CHANNEL 61) TRANSDUCER TO PASCAL'S
C       PER SQUARE METER PRESSURE, FOR THE 200 CU FT CHAMBER THE MULT
C       FACTOR IS 0.05 WHERE AS FOR THE 10,000 CU FT CHAMBER THE FACTOR
C       IS 0.001
C
        IF(NC(I).EQ.61)X(K,I)=X(K,I)*0.050/14.7
C
C       DETERMINE IF THE FUNCTION SWITCH(CHANNEL 63) IS
C       ON OR OFF  FOR THE 200 CU FT CHAMBER THE TRIGGER LEVEL SHOULD BE
C       5.0 WHERE AS FOR THE 10,000 CU FT CHAMBER THE LEVEL IS 1000.0.
C
        IF(NC(I).EQ.63 AND.ABS(X(K,I)).GT.5.0000)IS(J)=1
C
C       THE FIRST SUBSCRIPT OF X ARRAY  J=THE NTH SCAN #
C       AND THE SECOND SUBSCRIPT HOLD THE CHANNEL NUMBER
C
 202    X(J,I)=X(K,I)
        XT(1)=X(J,1)
        XT(2)=X(J,11)
        XT(3)=X(J,2)
        XT(4)=X(J,18)
        XT(5)=X(J,16)
        XT(6)=X(J,12)
        XT(7)=X(J,15)
        XT(8)=X(J,17)
        XT(9)=X(J,19)
        XT(10)=X(J,3)
        XT(11)=X(J,10)
        XT(12)=X(J,9)
        XT(13)=X(J,8)
        XT(14)=X(J,7)
        XT(15)=X(J,6)
        XT(16)=X(J,5)
        DO 204 I=1,16
 204    X(J,I)=XT(I)
C       WRITE(IOUT,208)J,NT(J),(X(J,I),I=1,16),IS(J)
206     CONTINUE
208     FORMAT(1H ,I3,F7.0,6X,F6.3,F6.1,F6.3,13F6.1,I6)
C
```

```
C  WRITE OUT NEW PAGE HEADERS, AND DUMP OUT CHART OF DATA
      WRITE(IOUT,700)(A(I),I=1,20),(I,I=1,13)
 700  FORMAT(1H1,20A4//7X10HPRESSURANT   FILL-,5X13HTHERMOCOUPLES/6X12HFL
     104 - 107HL 3X4HTANK 5X10HLOCATION 1,27X11HCOORDINATES/1X4HTIME,3X1
     2HP 5X4HT 7X1HI 7X8HT(DEG K) 74X16HI   R   THETA  Z/1X24H(SEC)(BAR)
     3(DEG K)  (BAR),2X13I6,10X14H(M)  (DEG) (M))
      CALL CODE
C
C  INITIALIZE TABLE OF OUTPUT CONSTANTS
C
      WRITE(AK2,209)
 209  FORMAT(10H 1  0.000 ,10H 00 -0.586,10H 2  0.000 ,10H 00 -0.293,10
     1H 3  0.000 ,10H 00  0.000,10H 4  0.000 ,10H 00  0.293,10H 5  0.000
     2 ,10H 00  0.586,10H 6  0.000 ,10H 00  0.878,10H 7  0.000 ,10H 00
     3 2.049,10H 8  0.000 ,10H 00  2.342,10H 9  0.000 ,10H 00  2.635,10H1
     4H  0.000 ,10H 00  2.928,10H11  0.000 ,10H 00  3.220,10H12  0.000 ,
     510H 00  3.513,10H13  0.000 ,10H 00  3.806,5(4H    ))
      DATA AG/6H  *** /
 701  FORMAT(1X,I4,F6.3,F6.1,F8.3,4X,13F6.1,4X,5A4)
 702  FORMAT(1X,I4,2X6,F8.3,4X,13F6.1,4X,5A4)
      FLAG=.TRUE.
C
C  FIND WHERE NOZZLE WAS TURNED ON AND OFF.
C  K0 POINTS TO ON POSITION
C  KP POINTS TO OFF+1 POSITION
C
      DO 300 K=1,J
      IF(IS(K).EQ.1 AND.FLAG)K0=K
      IF(IS(K).EQ.1.AND.FLAG)FLAG=.FALSE.
      IF(IS(K).EQ.0.AND..NOT.FLAG)KP=K
 300  IF IS(K).EQ.0.AND..NOT.FLAG)FLAG=.TRUE.
      T0=10
      TP=T0+KP-K0+1
C
C  SHOW EVERY SECOND OF DATA TILL KP+10 SECONDS
C  THEN SHOW EVERY 5 SECONDS OF DATA TILL KP+60 SECONDS
C  THEN SHOW EVERY 10 SECONDS OF DATA PAST KP+60 SECONDS
C  NOTE:!!! THIS SECTION MAY TAKE A LITTLE WORK TO GET ALL THE
C  BUGS OUT.
C
      K1=K0-10
      K2=K1+49
      JMAX=NJM-K1
      J=K1+4
D        WRITE(IPAR(1),606) JMAX,KP,K0,K1,K2
D606     FORMAT(" JMAX=",I4,"KP=",I4,"K0=",I4,"K1=",I4,"K2=",I4)
      L=0
 710  L=L+1
      IF(L.GT.JMAX)GO TO 725
      J=J+1
      IF(J.LE.KP+10)GO TO 715
      J=J+4
      IF(J.LE.KP+60)GO TO 715
      J=J+5
 715  IF(J.GT.JMAX)GO TO 725
      ITM=NT(J)-NT(K0)
      XT(1)=X(J,1)
      XT(2)=X(J,2)+273.2
      XT(3)=X(J,3)
      DO 717 I=4,16
```

```
 717  XT(I)=X(J,1)+273.2
      IF(J.LT.KO.OR.J.GT.KP+2)GO TO 720
      L2=5*L-4
      IF(L.GT.13)L2=66
      WRITE(IOUT,701)ITM,(XT(I),I=1,16),(AK(I),I=L2,L2+4)
      GO TO 710
 720  L2=5*L-4
      IF(L.GT.13)L2=66
      WRITE(IOUT,702)ITM,AG,AG,(XT(I),I=3,16),(AK(I),I=L2,L2+4)
      GO TO 710
C
C  DUMP OUT DATA TO DISK THAT WILL BE USED AS INPUT
C  TO CINFER
C
C  NOTE!!  IF NTH IS SET TO JMAX ALL THE DATA THAT IS ON THE PRODA
C  TAPE WILL OUTPUT TO THE PRODA OUTPUT DISC FILE  THE TAPE OUTPUT
C  REFLECTS ALL THE DATA, BUT FOR THE LONGER TIMES, NOT ALL THE DATA
C  IS SHOWN AS SOME SCANS ARE SKIPPED.
C  OTHERWISE SET NTH TO A SPECIFIC NUMBER, REMEMBER TO MODIFY THE NEXT
C  PROGRAM FOR THE PROPER NUMBER OF SCANS.
C
 725  FLAG= TRUE.
      NTH=JMAX
       IF(JMAX.GE. 149) NTH=149
C     NTH REPRESENTS NT IN PROGRAM CINFER
C     NTI= NUMBER OF THERMOCOUPLES
C     DT=  TIME SERIES NOMINAL INCREMENT (SEC)
C     AN=  NOZZLE NOMINAL AREA(CM**2)
C     VT=  TANK VOLUME(M**3)
C     CF=  FLOW COEFICIENT   (SEE NOTES IN CINFR)
C     GA=  SPECIFIC HEAT RATIO("   "     "   "  )
C     WA=  MOL WT OF AIR      ("   "     "   "  )
C     WP=  MOL WT OF PRESSURANT("  "     "   "  )
C
      NTI=13
      DT=1.0
      AN=0.010
      VT=5.1
      CF=0.0
      GA=0.0
      WA=0.0
      WP=0.0
      NUM=40
C
C     POSITION RECORD IN REFERENCE TO FILE
C
      CALL WRITF(IBUF,IERR,A,NUM)
      IF(IERR.LT.0)CALL ERR(IERR,304)
      CALL CODE
C
C    WRITE DATA TO DISK
C
      WRITE(IOBUF,302)NTI,NTH,DT,TO,TP,AN,VT,CF,GA,WA,WP
 302  FORMAT(2I4,9F7.3,1H )
      NUM = 36
      CALL WRITF(IBUF,IERR,IOBUF,NUM)
      IF(IERR.LT.0)CALL ERR(IERR,310)
C  NOTE!!!! THIS STATEMENT MAY STILL NEED WORK!!!!
       K4=NTH+K1-1
      DO 303 J=K1,K4
```

```
0479          CALL CODE
0480    C
0481    C     WRITE OUT DATA TO DISK
0482    C
0483          WRITE(IOBUF,304)X(J,3),X(J,1),X(J,2),(X(J,I),I=4,16)
0484     304  FORMAT(F8 3,F7 3,14F5.1,' ')
0485          NUM = 43
0486          CALL WRITF(IBUF,IERR,IOBUF,NUM)
0487          IF(IERR.LT 0)CALL ERR(IERR,317)
0488    303   CONTINUE
0489    C
0490    C     CHECK TO SEE IF EOF
0491    C
0492          GO TO 1005
0493    9090  DO 9091 I=1,100
0494    C
0495    C    WRITE OUT A LINE OF BLANKS
0496    C
0497    9091  IOBUF(I)=IDLANK
0498    C
0499    C     LOOKING FOR THE EOF MARKER
0500    C
0501          CALL WRITF(IBUF,IERR,XES,2)
0502          IF(IERR.LT 0)CALL ERR(IERR,323)
0503          DO 9092 I=1,4
0504          CALL WRITF(IBUF,IERR,IOBUF,100)
0505    9092  IF(IERR.LT 0)CALL ERR(IERR,326)
0506    C
0507    C     DETERMINE THE ACTUAL LOCATION OF THE RECORD POINTER
0508    C
0509          CALL LOCF(IBUF,IERR,IDUM,IRB,IDUM,JSEC)
0510          IF(IERR.LT.0)CALL ERR(IERR,328)
0511          ITRUN = JSEC/2 - (IRB +1)
0512    C
0513    C     CLOSE  THE DISK FILE
0514    C
0515          CALL CLOSE(IBUF,IERR,ITRUN)
0516          IF(IERR LT.0)CALL ERR(IERR,331)
0517    C
0518          WRITE(IPAR(1),2000)NAME
0519     2000 FORMAT ('AT THIS POINT PRODA IS FINISHED WITH ',3A2)
0520          STOP
0521     1919 FORMAT('DANGER IERR=',I6)
0522          END
0523    C
0524    C*****************************************************
0525    C     SUBROUTINE TO PRINT OUT FMP ERRORS AS THEY OCCUR
0526    C     FMP ERROR DESCRIPTIONS ARE LOCATED IN
0527    C     'RTE 4B PROGRAMMER'S RET SPOOLING MANUAL'
0528    C
0529          SUBROUTINE ERR(IER,LINE)
0530          COMMON IPAR(5)
0531          WRITE (IPAR(1),9999)IER,LINE
0532     9999 FORMAT ('IER=',I8,'LINE NUMBER =',I8)
0533          RETURN
0534          END
0535    C*****************************************************
0536          END$
0537
```

APPENDIX B

Program CINFR accepts data from PRODF and produces the B-tables [6].

```
&CINFF T=00004 IS ON CR00056 USING 00062 BLKS R=0000

FTN4
      PROGRAM CINFR
C
C     NOTE!!! THIS IS A MODIFIED FORM OF CINFR TO HANDLE LONGER DUMP TI
C     IT SHOULD BE USED WITH &PRODF AND &CINSF.
C      THIS PROGRAM IS THE SECOND OF THREE IN THE SERIES OF DATA
C      REDUCING PROGRAMS.  INPUT IS THE OUTPUT DISC FILE
C      FROM PROGRAM PRODA AND OUTPUT IS TO A DISC FILE.
C
C      IF THE NUMBER OF INPUT SCANS FOR THIS PROGRAM CHANGES, THE FOLLO
C      BUFFERS MUST BE REVISED, TI(NTI,NT),TIN(NT),P(NT),PS(NT),TS(NT),
C      FLIN(NT),TB(NT),CN(NT),BTA(NT),TAR(NT),TPRS(NT),PD(NT),BTTS(NT).
C
C      NOTE!!!!! THE AREA OF THE NOZZLES MUST BE VARIED ALONG WITH THE
C      VOLUME OF THE CHAMBER IF IT IS CHANGED.
C          PROGRAM WRITTEN BY PROF R. C. CORLETT
C          ADAPTED FOR USE AT NRL BY ALLEN BRODER
C          MODIFIED AND COMMENTED BY F.W.WILLIAMS 810408
C
      DIMENSION TI(13,150),TIN(150),P(150),PS(150),TS(150),A(10),XP(20),
     1FLIN(150),TB(150),CN(150),BTA(150),TAIR(150),TPRS(150),XPB(150),B1
     2TS(150)
      INTEGER IPAR(5),IBUF(144),OBUF(144),IOBUF(100),ISIZE(2)
      INTEGER NAME(3),NAME2(3)
      INTEGER CBUF1(32),CBUF2(61),CBUF3(12),CBUF4(9),CBUF5(12),CBUF6(10
      LOGICAL FI
      DATA XES/4HXXXX/
      DATA IBLANK/2H  /
C
      CALL RMPAR(IPAR)
1011  FORMAT('0 TIME  TEMP(DEG C)',9X,'BETA BETA'
     1,'/TSTAR PRESSURANT FRACTION ')
CC1012  FORMAT('0MAXIMUM OVERESTIMATE OF PRESSURANT FRACTION',
CC   1' DUE TO PLACEMENT IN INLET JET IS (TMEAN - TPRESS)/'
CC   2'(TAIR - TPRESS) * 3/20.     ')
1013  FORMAT('0COMMENCE VALVE OPENING ')
1014  FORMAT(' VALVE FULLY OPEN ')
1015  FORMAT(' COMMENCE VALVE CLOSURE ')
1016  FORMAT(' VALVE FULLY CLOSED ')
C
C     WRITE OUT HEADINGS TO DISC
C
      CALL CODE
      WRITE(CBUF1,1011)
CC    CALL CODE
CC    WRITE(CBUF2,1012)
      CALL CODE
      WRITE(CBUF3,1013)
      CALL CODE
      WRITE(CBUF4,1014)
      CALL CODE
      WRITE(CBUF5,1015)
      CALL CODE
      WRITE(CBUF6,1016)
      WRITE(IPAR(1),1000)
C
C     INPUT NAME IS THE PRODA OUTPUT FILE NAME
C
```

```
0059          CALL CINAV(IBUF,TBUF)
0060    C
0061    C  REWIND TEMPORARY FILE SO THAT IT CAN BE USED FOR
0062    C  INPUT BY CINFV
0063    C
0064          CALL RWNDF(TBUF,IERR)
0065          IF(IERR.LT.0)CALL ERR(IERR)
0066    C
0067    C  CINFV IS A SUBROUTINE THAT AVERAGES THE CASES FOR THE STATISTICAL
0068    C  ANALYSIS AND PREFORMS THE STATISTICS, MEAN VALUE OF ALL QUANTITIES
0069    C  NORMALIZED MEAN LOCAL PRESSURANT FRACTIONS, VARIANCES OF MEAN
0070    C  LOCAL PRESSURANT FRACTIONS AND DEVIATIONS OF MEAN LOCAL PRESSURANT
0071    C  FRACTIONS.
0072    C
0073          CALL CINFV(TBUF,OBUF)
0074    C
0075    C  DELETE TEMPORARY FILE
0076    C
0077          CALL PURGE(TBUF,IERR,TNAME)
0078          IF(IERR.LT.0)CALL ERR(IERR)
0079    C
0080    C  INITIALIZE AND WRITE OUT PADDING BUFFER TO END OF OUTPUT FILE
0081    C
0082    CC       TBUF(101)=13
0083           DO  5  I=1,100
0084      5    TBUF(I)=IBLANK
0085           DO  10  I=1,4
0086               CALL WRITF(OBUF,IERR,TBUF,100)
0087   10      IF(IERR.LT.0) CALL ERR(IERR)
0088    C
0089    C  CLOSE AND TRUNCATE OUTPUT FILE TO CORRECT SIZE
0090    C
0091          CALL LOCF(OBUF,IERR,IDUM,IRB,IDUM,ISEC)
0092          IF(IERR.LT.0)CALL ERR(IERR)
0093          ITRUN = ISEC/2  -  (IRB + 1)
0094          CALL CLOSE(OBUF,IERR,ITRUN)
0095          IF(IERR.LT.0)CALL ERR(IERR)
0096    C
0097    C  WRITE OUT MESSAGE THAT CINST HAS FINISHED.
0098    C
0099          WRITE(IPWR(1),2000) ONAME
0100   2000   FORMAT(" AT THIS POINT CINST IS FINISHED WITH ",3A2)
0101          STOP
0102          END
0103    C
0104    CCCCCCCCCCCCCCCCCCCCCCCCCCCCCCCCCCCCCCCCCCCCCCCC
0105    C
0106          SUBROUTINE ERR(IERR,LINE)
0107    C  THIS SUBROUTINE WRITES OUT THE ERROR # PASSED TO
0108    C  IT, AND THEN HALTS THE PROGRAM. THESE ERRORS ARE FOR FMP
0109    C  CALLS. IN SOME CASES THE LINE NUMBER IS GIVEN.
0110    C
0111          INTEGER IERR,IPAR(5)
0112          COMMON IPAR
0113          WRITE(IPAR(1),10)IERR,LINE
0114     10   FORMAT(' IERR = ',I6,' LINE NUMBER=',I8)
0115          STOP
0116          END
0117    C
0118    CCCCCCCCCCCCCCCCCCCCCCCCCCCCCCCCCCCCCCCCCCCCCCCC
```

```
C
      SUBROUTINE CINAV(INBUF,OUTBUF)
      INTEGER INBUF(144),OUTBUF(144),IOBUF(100)
      DIMENSION D(101,25),DI(50,21)
      DATA IBLANK/2H  /
      DATA NC/99/
      DATA IXES/2HXX/
      DATA ICO/2H V/
C READ IN THE FIRST RECORD FROM OPEN INPUT DISC FILE
C THE LARGEST INPUT RECORD IS CONTROLLED BY THE SIZE OF IOBUF,
C WHICH CURRENTLY IS 100,SEE DIMENSION STATENENT.
  1   CALL READF(INBUF,IERR,IOBUF)
      IF(IERR.LT.0)CALL ERR(IERR,1)
C SET THE DATA ARRAY EQUAL TO 0'S
      DO 3 NTK=1,50
        DO 3 I=1,21
          DI(NTK,I)=0.0
 3    CONTINUE
C TEST TO SEE IF YOU ARE AT THE END OF THE FILE(LOOKING FOR "XX")
      IF(IOBUF(1).EQ.IXES)GO TO 9090
C READ THE NEXT THREE RECORDS FROM THE OPEN INPUT DISC FILE
      DO 101 I=1,3
          CALL READF(INBUF,IERR,IOBUF,101)
 101  IF(IERR.LT.0)CALL ERR(IERR)
C READS IN 101 LINES OF DATA, STORING ONLY DATA AND DISREGUARDING
C TITLE LINES. TO CHANGE THE AMOUNT OF DATA INPUT THE DIMENSION
C STATENENT D(101,25) MUST BE CHANGED ALONG WITH DO LOOP 20,30
C LINE AFTER 210.
      DO 10 NT=1,101
 9        CALL READF(INBUF,IERR,IOBUF)
          IF (IERR.LT.0)CALL ERR(IERR,9)
          IF(IOBUF(1).EQ.ICO)NTC=NT-1
C  TEST THIRD CHARACTER TO BE A NUMBER
          ITEST=(IAND(IOBUF(2),177B))-60B
          IF(ITEST.LT.0.OR.ITEST.GT.9) GOTO 9
          CALL CODE
          READ(IOBUF,110)(D(NT,I),I=1,20)
D         WRITE(6,110)(D(NT,I),I=1,20)
 110      FORMAT(4F6.1,F8.1,F8.4,F12.3,F8.3,12F6.3)
 10   CONTINUE
C
C  CREATE A NEW COLUMN OF DATA(25TH) WHICH IS DERIVED FROM N/NO
C  WHERE N=NO. OF MOLES AT TIME T AND NO= INITIAL NO. OF MOLES.
C
      DO 20 NT=1,101
          D(NT,25)=1.0/(1.0-D(NT,7))
 20   CONTINUE
C
C  CALCULATE TC CONSIDERING TAU 7 AND TAU 5 . NTC=9
C
      TC=2.0/ALOG(D(NTC-2,25)/D(NTC-4,25))
C CALCULATE A TAU, CREATES A NEW COLUMN OF DATA(24TH) WHICH IS TIME
C NORMALIZED.  IT IS NORMALIZED TO FULL VALVE CLOSURE AS 1.00.
C TAU=XBAR/XBAR SUB C.
C
      DO 30 NT=1,101
          D(NT,24)=D(NT,7)/D(35,7)
          DTC=NT-NTC-1
          IF(NT.GT.NTC)D(NT,24)=1.0+DTC/TC
 30   CONTINUE
```

```
0179  C
0180  C  CREATES A NEW ARRAY,DI(50,21)
0181  C
0182        DO 200 I=1,20
0183            DI(1,I)=D(1,I)
0184   200  CONTINUE
0185  C
0186  C  CONSTANTS
0187  C
0188        NT=1
0189        NTK=2
0190        TAUK=0.05
0191   210  NT=NT+1
0192        IF(NT.GT.101)GO TO 300
0193   215  IF(D(NT,24).LT.TAUK)GO TO 210
0194  C
0195  C  SIZE OF THE TIME INCREMENT IN THE TAU TABLE.
0196  C
0197        DD24=D(NT,24)-D(NT-1,24)
0198  C
0199  C  INTERPOLATES FOR THE NEW TABLE NORMALIZED TO TAU AND
0200  C  BUILDS A NEW ARRAY, DI(50,21)
0201  C
0202        DO 220 I=1,20
0203            DI(NTK,I)=D(NT-1,I)
0204            IF(DD24.GT.0.0001)DI(NTK,I)=DI(NTK,I)+(D(NT,I)-D(NT-1,I))
0205       1    *(TAUK-D(NT-1,24))/DD24
0206   220  CONTINUE
0207        IF(NTK.GE.50)GO TO 300
0208        NTK=NTK+1
0209        TAUK=TAUK+0.05
0210        GO TO 215
0211   300  TAUKN=TAUK-0.05
0212  D     WRITE(6,150)TC,TAUKN,NC,NTC
0213  C WRITE          VALUES TO THE TEMPORARY DISC FILE
0214   150  FORMAT(1H1,2F10.2,2I10,1H )
0215  C
0216  C  WRITE OUT SELECTED VALUES TO THE TEMPORARY DISC FILE,TMPBUF:
0217  C           TC=
0218  C           TAUKN=
0219  C           NC=
0220  C           NTC= SCAN WHERE THE VALVE IS FULLY CLOSED.
0221  C
0222        CALL CODE
0223        WRITE(IOBUF,150)TC,TAUKN,NC,NTC
0224        CALL WRITF(OUTBUF,IERR,IOBUF,21)
0225        IF(IERR.LT.0)CALL ERR(IERR,160)
0226  C WRITE THE DATA TO THE TEMPORARY DISC FILE "TMPBUF"
0227        DO 310 NTK=1,50
0228            DNTK=NTK-1
0229            DI(NTK,21)=0.05*DNTK
0230   160      FORMAT(1H ,F5.1,3F6.1,F8.1,F8.4,F6.3,F8.3,12F6.3,F5.2,1H )
0231            CALL CODE
0232            WRITE(IOBUF,160)(DI(NTK,I),I=1,21)
0233            CALL WRITF(OUTBUF,IERR,IOBUF,66)
0234            IF(IERR.LT.0)CALL ERR(IERR,310)
0235   310      CONTINUE
0236  C
0237  C  PICK UP THE NEXT CASE TO PROCESS
0238  C
```

```
0239          GO TO 1
0240   C
0241   C  WRITE OUT A LINE OF BLANKS AT THE END OF TEMPORARY FILE.
0242   C
0243   9090    IOBUF(101)=13
0244              DO 9091   I=1,100
0245   9091       IOBUF(I)=IBLANK
0246              CALL WRITF(OUTBUF,IERR,IOBUF,101)
0247              IF(IERR.LT.0)CALL ERR(IERR,9091)
0248          RETURN
0249          END
0250   C
0251   CCCC
```

```
0299          GO TO 12
0300   C
0301   C  CALCULATE THE AVERAGE MEAN PRESSURANT AT THE 21ST TIME FROM
0302   C  WELL AFTER VALVE CLOSURE.
0303   C
0304    500  XBARAV=S1(23,7)/CN
0305   C
0306   C  CALCULATE THE AVERAGE VALUES FOR THE X NO. OF CASES FOR ARRAY S1
0307   C  (SUMS), S2(SUM OF SQUARES), AND SSG(SUM OF DIFFERENCE OF SQUARES)
0308   C
0309          DO 520 NT=1,50
0310            DO 510 I=1,21
0311              S1(NT,I)=S1(NT,I)/CN
0312              S2(NT,I)=S2(NT,I)/CN
0313   C  REINITIALIZE ARRAY SG
0314              SG(NT,I)=0.0
0315              SGG=S2(NT,I)-S1(NT,I)**2
0316              IF(SGG.GT.0.0)SG(NT,I)=SQRT(SGG)
0317              IF(I.GT.7.AND.I.LT.21)DS(NT,I)=S1(NT,I)-S1(NT,7)
0318              S2(NT,I)=0.0
0319              IF(I.GT.7.AND.I.LT.21)S2(NT,I)=S1(NT,I)/XBARAV
0320              DS(NT,I)=DS(NT,I)/XBARAV
0321              IF(I.GT.7.AND.I.LT.21)SG(NT,I)=SG(NT,I)/XBARAV
0322              IF(I.EQ.21)S2(NT,I)=S1(NT,I)
0323              IF(I.EQ.21)SG(NT,I)=S1(NT,I)
0324              IF(I.EQ.21)DS(NT,I)=S1(NT,I)
0325    510     CONTINUE
0326              IF(NT.GT.20.OR.NT.LT.5)GO TO 520
0327              TBAR=S1(NT,2)+273.2
0328              T0=S1(1,2)+273.2
0329              DTBAR=S1(NT,2)-S1(NT-1,2)
0330              SN=1.0/(1.0-S1(NT,7))
0331              SN1=1.0/(1.0-S1(NT-1,7))
0332              DLN=ALOG(SN/SN1)
0333              IF(DLN.LE.0.00001)GO TO 520
0334              BETA=S1(NT,5)
0335              TS=(0.4*BETA*(TBAR-T0)+TBAR+DTBAR/DLN)/1.4
0336              S2(NT,2)=TS-273.2
0337              S2(NT,6)=(S1(NT,4)-S2(NT,2))/(S1(NT,3)-S1(NT,4))/XBARAV
0338   D    WRITE(6,997)TBAR,T0,DTBAR,SN,SN1,DLN,BETA,TS
0339   D997       FORMAT(1H ,3F8.1,3F8.4,2F8.1)
0340    520  CONTINUE
0341    120  FORMAT(/(1H ,F5.1,3F6.1,F8.1,F8.4,F6.3,F8.3,12F6.3,F5.2))
0342   D      WRITE(6,120)((S1(NT,I),I=1,21),NT=1,50)
0343   C
0344   C  WRITE A HEADING FOR THE FIRST STAT TABLE,S1
0345   C
0346          CALL CODE
0347          WRITE(IOBUF,65)
0348   65     FORMAT('0 MEAN VALUES OF ALL QUANTITIES  ',/)
0349          CALL WRITE(OUTBUF,IERR,IOBUF,17)
0350          IF(IERR.LT.0)CALL ERR(IERR,65)
0351          CALL CODE
0352          WRITE(CBUF1,1010)
0353   1010   FORMAT("0  TIME",1X,"TMP,C",1X,"TMP,C",1X,"TMP,C",3X,"BETA",
0354         1  2X,"BETA/",3X," X ",20X,"MEAN PRESSURANT FRACTIONS AT"
0355         2  " LOCATIONS I",22X,"TAU")
0356          CALL CODE
0357          WRITE(CBUF2,1020)
0358   1020   FORMAT("   SEC",2X,"INIT",2X,"      ",1X,"      ",9X,"THETA",
```

```
      1       3X,"BAR",6X,"1",5X,"2",5X,"3",5X,"4",5X,"5",5X,"6",
      2       5X,"7",5X,"8",5X,"9",5X,"10",4X,"11",4X,"12",4X,"13 ")
       CALL WRITF(OUTBUF,IERR,CBUF1,65)
       IF(IERR.LT.0) CALL ERR(IERR)
       CALL WRITF(OUTBUF,IERR,CBUF2,63)
       IF(IERR.LT.0) CALL ERR(IERR)
        CALL WRIT1(S1,OUTBUF)
C
C  WRITE A HEADING FOR THE SECOND STAT TABLE,S2
C
       CALL CODE
       WRITE(IOBUF,70)
70     FORMAT('1 NORMALIZED MEAN LOCAL'
      1,' PRESSURANT FRACTIONS ',/)
       CALL WRITF(OUTBUF,IERR,IOBUF,23)
       IF(IERR.LT 0)CALL ERR(IERR)
        CALL WRIT2(S2,OUTBUF)
C
C  WRITE A HEADING FOR THE THIRD STAT TABLE,SG
C
C
       CALL CODE
       WRITE(IOBUF,75)
75     FORMAT('1 STANDARD DEVIATION OF MEAN LOCAL'
      1,' PRESSURANT FRACTIONS  ')
       CALL WRITF(OUTBUF,IERR,IOBUF,29)
       IF(IERR.LT.0)CALL ERR(IERR)
        CALL WRIT2(SG,OUTBUF)
C
C  WRITE A HEADING FOR THE FORTH STAT TABLE,DS
C
       CALL CODE
       WRITE(IOBUF,80)
80     FORMAT('1 DEVIATIONS OF MEAN LOCAL'
      1,' PRESSURANT FRACTIONS ')
       CALL WRITF(OUTBUF,IERR,IOBUF,24)
       IF(IERR.LT.0)CALL ERR(IERR)
        CALL WRIT2(DS,OUTBUF)
C
C  WRITE THE NUMBER OF CASES TREATED
C
       NCH=CN
       CALL CODE
       WRITE(IOBUF,130)NCH
       CALL WRITF(OUTBUF,IERR,IOBUF,5)
       IF(IERR.LT.0)CALL ERR(IERR)
130    FORMAT(I4,2H CASES )
       RETURN
       END
C
CCCC
```

```
      DO 20 NT=1,50
          CALL CODE
          WRITE(IOBUF,120)(AR(NT,I),I=1,21)
120       FORMAT(1H ,F5.1,3F6.1,F8.1,F8.4,F6.3,F8.3,12F6.3,F5.2,1H )
          CALL WRITE(OUTBUF,IERR,IOBUF,66)
20    IF(IERR LT 0)CALL ERR(IERR)
      RETURN
      END
C
C
C
      SUBROUTINE WRITE(AR,OUTBUF)
C
C  THIS IS A SUBROUTINE THAT OUTPUTS THE DATA TO A DISC FILE,DNAME
C  FROM DIRECT ACCESS, AND ALSO DEVIATION AND DEVIATION
C  OF MEAN
C
      REAL AR(50,21)
      INTEGER IOBUF(100),OUTBUF(144),CBUF1(21),CBUF2(43)
C
C  WRITE OUT THE TWELVE MEANS
C
      CALL CODE
      WRITE(CBUF1,1010)
1010  FORMAT(1H ,'TOTAL OBSERVATIONS I')
      CALL CODE
      WRITE(CBUF2,1020)(I,I=1,13)
1020  FORMAT(1H ,13(2X,I4),"   TAU ")
      CALL WRITE(OUTBUF,IERR,CBUF1,21)
      IF(IERR LT 0) CALL ERR(IERR)
      CALL WRITE(OUTBUF,IERR,CBUF2,43)
      IF (IERR LT.0) CALL ERR(IERR)
C
C  WRITE OUT THE DATA TO THE DISC
C
      DO 20 NT=1,50
          CALL CODE
          WRITE(IOBUF,120)(AR(NT,I),I=8,21)
120       FORMAT(2H   ,12F6.3,F5.2,1H )
          CALL WRITE(OUTBUF,IERR,IOBUF,66)
          IF (IERR LT 0) CALL ERR(IERR)
20        CONTINUE
          RETURN
          END
          END$
```

AD-A113 458 NAVAL RESEARCH LAB WASHINGTON DC F/G 13/12
NRL 324-CU M CHAMBER PRESSURIZATION EXPERIMENT: PRESSURANT CONC--ETC(U)
MAR 82 J P STONE, J I ALEXANDER, T T STREET
UNCLASSIFIED NRL-8523 NL

2 OF 2

END
DATE
FILMED
5-82
DTIC

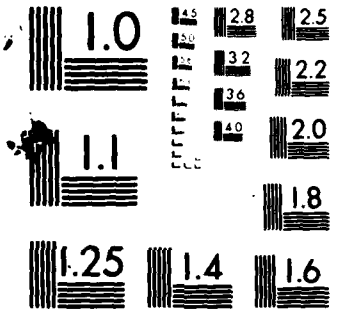

MICROCOPY RESOLUTION TEST CHART
NATIONAL BUREAU OF STANDARDS 1963 A

APPENDIX C

Program CINST accepts data from CINFR and produces the C-, D-, and E-tables [6].

```
&CINBF T=00004 IS ON CR000056 USING 00060 BLKS R=0000

      FTN4
      C
      C     NOTE!!!! THIS IS A MODIFIED FORM OF CINST TO HANDLE LONGER DUMP
      C     TIMES. IT DOES NOT CHANGE THE NONDIMENSIONAL TIME TAU AT 2.5.
            PROGRAM CINST(4,99), FWW VERSION 810213 M002
      C
      C
      C  THIS PROGRAM DOES STATISTICS ON THE DATA FROM CINFR
      C  THE RUNS FROM CINFR ARE GROUPED ACCORDING TO A PARTICULAR
      C  TEST CONFIGURATION.  THE INPUT DATA IS FROM DISC FILES THAT
      C  WERE CREATED FROM CINFR.  THE OUTPUT DATA FROM THIS PROGRAM
      C  IS STORE IN DISC FILES AND MAYBE TRANSFERED TO MAGNETIC TAPE
      C  WITH STORE COMMANDS FROM THE FILE MANAGER.
      C
      C
      C  THIS PROGRAM WAS WRITTEN BY PROF. R. C. CONLETT, UNIV OF
      C  WASHINGTON, SEATTLE WASHINGTON.
      C  THIS PROGRAM WAS ADAPTED FOR USE ON THE NRL COMPUTER,CODE
      C  6180 BY A. BRODER AND D. INDRITZ.
      C  IT WAS BEEN COMMENTED BY F. W. WILLIAMS.
      C  PROGRAM MODIFIED BY F.W.WILLIAMS 810404
      C
      C
            INTEGER INAME(3),ISIZE(2),OBUF(144),IBUF(144)
            INTEGER TBUF(144),ONAME(3),TNAME(3),IPAR(5)
            COMMON IPAR
            DATA TNAME/2HTN,2HPB,2HUF/
            DATA IBLANK/2H  /
            CALL RMPAR(IPAR)
            WRITE(IPAR,1)
      1     FORMAT('CARTRIDGE #, INPUT FILE NAME :(I5,A6)')
            READ(IPAR,2)ICR,INAME
      2     FORMAT(I5,1X,3A2)
            WRITE(IPAR,3)
      3     FORMAT('CARTRIDGE #, OUTPUT FILE NAME :(I5,A6)')
            READ(IPAR,2)ICR2,ONAME
            ISIZE(1)=-1
            ITYPE=3
      C
      C  CREATE OUTPUT FILE
      C
            CALL CREAT(OBUF,IERR,ONAME,ISIZE,ITYPE,IDUN,ICR2)
            IF(IERR.LT.0)CALL ERR(IERR)
      C
      C  OPEN INPUT FILE
      C
            CALL OPEN(IBUF,IERR,INAME,IDUN,IDUN,ICR)
            IF(IERR.LT.0)CALL ERR(IE
      C
      C  CREATE TEMPORARY FILE FOR S,U..    -TERMEDIATE RESULTS
      C  FROM CINAV
      C
            CALL CREAT(TBUF,IERR,TNAME,ISIZE,ITYPE,IDUN)
            IF(IERR.LT.0)CALL ERR(IERR)
      C
      C  CINAV IS A SUBROUTINE WHICH INTERPOLATES THE DATA, CREATES A
      C  NONDIMENSIONAL TIME AND NORMALIZES THE DATA TO IT.
      C
```

```
0059  1000  FORMAT('GIVE CARTRIDGE #, NAME FOR INPUT FILE'
0060       1,'(I5,A6)')
0061        READ(IPAR(1),1002)ICR,NAME
0062  1002  FORMAT(I5,1X,3A2)
0063        WRITE(IPAR(1),1004)
0064  1004  FORMAT('GIVE CARTRIDGE #, NAME FOR OUTPUT FILE'
0065       1,'(I5,A6)')
0066        READ(IPAR(1),1002)ICR2,NAME2
0067        ISIZE(1)=-1
0068        ITYPE = 3
0069  C
0070  C     CREATE A DISK FILE
0071  C
0072        CALL CREAT(OBUF,IERR,NAME2,ISIZE,ITYPE,IDUM,ICR2)
0073        IF(IERR.LT.0)CALL ERR(IPAR(1),IERR)
0074  C
0075  C     OPEN INPUT FILE
0076  C
0077        CALL OPEN(IBUF,IERR,NAME,IDUM,IDUM,ICR)
0078        IF(IERR.LT.0)CALL ERR(IPAR(1),IERR)
0079  C
0080   10   DO 9 I=1,100
0081  C
0082  C     CONSTRUCT A LINE OF BLANKS
0083  C
0084    9   IOBUF(I) = IBLANK
0085        CALL READF(IBUF,IERR,A)
0086        IF(IERR.LT.0)CALL ERR(IPAR(1),IERR)
0087  C
0088  C     CHECK FOR EOF
0089  C
0090        IF(A(1).EQ.XES)GO TO 9090
0091        CALL READF(IBUF,IERR,IOBUF)
0092        IF(IERR.LT.0) CALL ERR(IPAR(1),IERR)
0093        CALL CODE
0094        READ(IOBUF,20)NTI,NT,DT,TO,TP,AN,VT,CF,GA,WA,WP
0095  C
0096  C     DESCRIPTION OF VARIBLE MEANING
0097  C
0098  C     NTI= NO. OF THERMOCOUPLES, NT=NO. OF POINTS IN DATA TIME SERIES,
0099  C     DT=TIME SERIES NOMINAL INCREMENT (SEC), TO AND TP RESPECTIVELY
0100  C     EQUAL TIMES OF VALVE OPENING AND CLOSURE (SEC), AN=NOZZLE NOMINAL
0101  C     AREA (CM**2), VT=TANK VOLUME (M**3), CF=FLOW COEFFICIENT -
0102  C     IF CF IS INPUT AS ZERO AND NTI EXCEEDS 5 CF IS DEFAULT CALCULATED
0103  C     USING MEAN OF TC DATA AS ESTIMATE OF MEAN TANK TEMPERATURE,
0104  C     GA=SPEC. HEATS RATIO - IF INPUT AS ZERO ASSIGNED 1.4 DEFAULT,
0105  C     WA=MOL. WT. OF AIR.- IF INPUT AS ZERO ASSIGNED 28.97 DEFAULT,
0106  C     WP=MOL. WT. OF PRESSURANT - IF INPUT AS ZERO DEFAULT SET =WA.
0107  C
0108   20   FORMAT(2I4,9F7.3)
0109  C
0110  C     IF THERE ARE NO THERMOCOUPLES THE PROGRAM IS FINISHED
0111  C     AND A MESSAGE INDICATING COMPLETION WILL BE PRINTED
0112  C
0113        IF(NTI.GT.0.0)GO TO 30
0114        WRITE(IPAR(1),2000)NAME2
0115  2000  FORMAT ('AT THIS POINT CINFR IS FINISHED WITH ',3A2)
0116        STOP
0117  C
0118  C     INITIALIZING HEAT RATIO, MOL. WEIGHT OF AIR, AND
```

```
C     MOL. WEIGHT  OF PRESSURE TO DEFAULT IF APPROPRIATE
C
 30   IF(GA.EQ.0.0)GA=1.4
      IF(WA.EQ.0.0)WA=28.94
      IF(WP.EQ.0.0)WP=WA
C
C     WRITES TO LINE PRINTER
C
D     WRITE(6,40)NTI,NT,DT,TO,TP,AN,VT,GA,WA,WP
D40   FORMAT(1H120X14HPROGRAM CINFER/71H0 NTI   NT    DT     TO       TP
D    1     AN       VT       GA       WA       WP/1H I4,I5,F7.3,7F8.3)
C
C    IF NUMBER OF THERMOCOUPLES ARE  LESS OR EQUAL TO 5
C    OR IF FLOW COEFFICIENT EQUALS 0, PRINT MESSAGE INDICATING
C    SO AND ALSO PRINT A MESSAGE INDICATING PROGRAM IS
C    COMPLETED.
C
      IF(NTI.GT.5.OR.CF.NE.0.0)GO TO 60
      WRITE(IPAR(1),50)
 50   FORMAT(20H0NO FLOW COEFFICIENT)
      WRITE(IPAR(1),2000)NAME2
      STOP
C
C
C     PRINT OUT FLOW COEFFICIENT IF ANY
C
 60   IF(CF.NE.0.0)WRITE(IPAR(1),70)CF
 70   FORMAT(20H0FLOW COEF. INPUT ASF7.4)
C
C     PRINT OUT NUMBERS UP TO THE TOTAL NUMBER OF
C     THERMOCOUPLES
C
D     WRITE(6,80) (I,I=1,NTI)
D80   FORMAT(21H0RAW TIME SERIES DATA/30H   TIME   P     PS    TS    TI/
D    11H ,26X2HI=I1,8I5/1H ,I29,8I5)
      DO 100 J=1,NT
      RJ=J-1
      TIM(J)=RJ*DT
C
C     MUST BE MATED TO NRL DATA RECORD.
C
      CALL READF(IBUF,IERR,IOBUF)
      IF(IERR.LT.0) CALL ERR(IPAR(1),IERR)
      CALL CODE
      READ(IOBUF,90)P(J),PS(J),TS(J),(TI(I,J),I=1,NTI)
 90   FORMAT(F8.3,F7.3,14F5.1)
C
C     DESCIPTION OF VARIBLES
C     TIM=TIME(SEC), P=TANK PRESS. (ATM), PS=NOZZLE PRESS. (ATM),
C     TS=NOZZLE TOTAL TEMP. (DEG C), AND TI=TEMP. (DEG C) OF ITH TC.
C
D     WRITE(6,110)TIM(J),P(J),PS(J),TS(J),(TI(I,J),I=1,NTI)
D110  FORMAT(1H0,F6.2,2F6.3,F6.1,9F5.1/1H ,F29.1,8F5.1)
 100  CONTINUE
C
C
C     CONVERT TEMP. DATA TO DEG. K AND PRESS. DATA TO NEWTONS/M**2.
C
      DO 120 J=1,NT
      P(J)=P(J)*101322.0
```

```
0179          PS(J)=PS(J)*101322.0
0180          TS(J)=TS(J)+273.2
0181          DO 120 I=1,NTI
0182   120    TI(I,J)=TI(I,J)+273.2
0183    C
0184    C     CONVERT AN TO M**2, NOZZLE NOMINAL AREA
0185    C
0186          AN=AN*0.0001
0187    C
0188    C     ALTER TIME SERIES TO INCLUDE TO AND TP.
0189    C
0190          L=TO/DT
0191          L=L+1
0192          M=TP/DT
0193          M=M+1
0194          IF(M-L.GT.4)GO TO 140
0195    C
0196    C     IF (M-L) IS LESS OR EQUAL TO 4 PRINT OUT
0197    C     MESSSAGE AND STOP PROGRAM
0198    C
0199          WRITE(IPAR(1),130)
0200   130    FORMAT(52HONOT ENOUGH FILLING DATA TO EVALUATE PRESSURANT FLOW)
0201          WRITE(IPAR(1),2000)NAME2
0202          STOP
0203    C
0204   140    CONTINUE
0205    D     DO 916 J=1,NT
0206   D916   WRITE(6,917)TIN(J),P(J),PS(J),TS(J),(TI(I,J),I=1,NTI)
0207   D917   FORMAT(1H0,F7.2,2F10.1,F7.1/1H ,13F7.1)
0208    C
0209    C     ADJUST TANK TEMPS. TO UNIFORM VALUE AT TIME TO.
0210    C     CALCULATE MEAN TEMPERATURE.
0211    C
0212          NTEF=NTI
0213          CNTI=NTEF
0214          TB(L)=0.0
0215          DO 160 I=1,NTI
0216    C
0217          TB(L)=TB(L)+TI(I,L)/CNTI
0218   160    CONTINUE
0219          DO 170 I=1,NTI
0220          TCOR=TB(L)-TI(I,L)
0221          DO 170 J=1,NT
0222   170    TI(I,J)=TI(I,J)+TCOR
0223    C
0224    C     GAS CONST. RG (JOULE/KGM-MOL/DEG K) AND CRIT. PRESS. RATIO RP
0225    C
0226          RG=8314.5
0227          RP=(2.0/(GA+1.0))**(GA/(GA-1.0))
0228    C
0229    C     CALCULATE NOMINAL FLOW INTEGRAL  ( ARRAY FLIN), MEAN TEMP. ( ARRAY TB),
0230    C     AND NO. MOLES IN TANK (ARRAY CN).
0231    C
0232          DO 190 J=1,NT
0233          PRAT=AMAX1(RP,P(J)/PS(J))
0234          VEL=SQRT(2.0*GA*RG/WP*TS(J)/(GA-1.0)*(1.0-PRAT**((GA-1.0)/GA)))
0235          DENS=PS(J)/RG/TS(J)*PRAT**(1.0/GA)
0236          FLIN(J)=AN*VEL*DENS
0237          TB(J)=0.0
0238          DO 180 I=1,NTI
```

```
      TB(J)=TB(J)+TI(I,J)/CNTI
 180  CONTINUE
C
      CN(J)=P(J)*VT/TB(J)/RG
D     WRITE(6,919)J,PRAT,VEL,DENS,FLIN(J)
D919  FORMAT(1H ,I5,4F15.4)
 190  CONTINUE
      IF(CF.NE.0.0)GO TO 240
C
C     CALCULATE FLOW DATA FROM NOMINAL MEAN TEMP. DATA (THAT IS, FROM
C     MEAN TC. DATA) AS ESTIMATE OF MEAN TANK TEMP. (INPUT VALUE OF CF
C     IS ZERO.) THIS IS BETWEEN TO AND TP.
C     EVALUATE FLOW INTEGRAL FLINT.
C
      FLINT=0.0
      M1=M-1
      DO 200 J=L,M1
 200  FLINT=FLINT+(FLIN(J)+FLIN(J+1))/2.0*(TIN(J+1)-TIN(J))
      CF=(CN(M)-CN(L))/FLINT
D     WRITE(6,210)CF
D210  FORMAT(4H0CF=F6.4,61H -INFERRED USING MEAN OF TC. DATA TO APPROX.
D    1 MEAN TANK TEMP.)
C
C     DEVELOP CONSISTENT VALUES FOR MEAN TEMP. TB AND NO. MOLS. CN
C     FOR NON-FILLING PERIODS.
C
      DO 220 J=1,L
      CN(J)=CN(L)
 220  TB(J)=P(J)*VT/CN(J)/RG
      DO 230 J=M,NT
      TBJ=0.0
      DO 225 I=1,NTI
      TBJ=TBJ+TI(I,J)/CNTI
 225  CONTINUE
      CN(J)=CN(M)
      TB(J)=P(J)*VT/CN(J)/RG
      DO 228 I=1,NTI
 228  TI(I,J)=TI(I,J)+TB(J)-TBJ
 230  CONTINUE
      GO TO 260
C
C     INTEGRATE FLOW INTO TANK USING INPUT VALUE OF CF.
C
 240  DO 250 J=1,NT
      IF(J.LT.L)CN(J)=CN(L)
      IF(J.GT.L.AND.J.LE.M)CN(J)=CN(J-1)+CF*(FLIN(J-1)+FLIN(J))/2.0*(TIN
     1(J)-TIN(J-1))
      IF(J.GT.M)CN(J)=CN(M)
 250  TB(J)=P(J)*VT/CN(J)/RG
C
C     INTEGRATION OF TAIR AND TPRS
C
 260  CONTINUE
D     WRITE(6,270)L,M
D270  FORMAT(50H1SUMMARY OF CALCULATIONS THRU ARRAYS TAIR AND TPRS/3H J=
D    1I2,2X6HAND M=I3/58H0  J   TIME   TAIR   TPRS  TSTAR   BETA   XPBAR
D    2 BETA/TSTAR/)
D280  FORMAT(1H ,I3,5F7.1,F8.3,E10.2)
      NTM1=NT-1
      DO 460 J=L,NTM1
```

```
      T1=TB(L)
      TAIR(J)=T1
      TPRS(J)=TS(L)
      TSTAR=CN(L)/(CN(L+1)-CN(L))
      IF(J.GT.L.AND.TB(J).GT.T1)GO TO 420
      TB2=T1
      TA2=T1
      TS2=TS(J)
      P2=P(J)
      CN2=CN(J)
      GM1=GA-1.0
      DLTP=(TB(J+2)-T1)/(0.5*(TB(J+2)+T1))/ALOG(P(J+2)/P(L))
      CNU2=GM1*T1/(GA*(T1-TS(L))+GA*TS(L)-T1)
      BTA(J)=(1.D0*GA*TS2-TB2-CN2*1.D0*(TB(J+2)-T1)/(CN(J+2)-CN(L)))/
     1(GM1*1.D0*0.5*(TB(J+2)-T1))
D     WRITE(6,410)J,DLTP,CNU2
D410  FORMAT(3H0J=I3,10X5HDLTP=F6.3,10X4HCNU=F6.3)
      GO TO 450
 420  TB1=TB2
      TS1=TS2
      P1=P2
      CN1=CN2
      TA1=TA2
      CNU1=CNU2
      TS2=TS(J)
      TB2=TB(J)
      P2=P(J)
      CN2=CN(J)
      TBB=0.5*(TB1+TB2)
      TSB=0.5*(TS1+TS2)
      PB=0.5*(P1+P2)
      CNB=0.5*(CN1+CN2)
      TAB=TA1
      CNUB=CNU1
      DP=P2-P1
      DN=CN2-CN1
      DTB=TB2-TB1
      FI=.FALSE.
 430  DTA=GM1/GA*TAB*DP/PB-CNUB/GA*((GA*TSB-TBB)/CNB*DN-DTB)
      TA2=TA1+DTA
      TAB=0.5*(TA1+TA2)
      CNU2=(TA2-T1)/(TB2-T1)
      CNUB=0.5*(CNU1+CNU2)
      IF(FI)GO TO 440
      FI=.TRUE.
      GO TO 430
 440  TAIR(J)=TA2
      IF(J.LE.M-2)TSTAR=CNB/DN*DT
      BTA(J)=((1.D0*GA*TSB-TBB)*DN/CNB-DTB)/GM1/(TBB-T1)*TSTAR/DT
      TPRS(J)=(CN2*TB2-CN(L)*TA2)/(CN2-CN(L))
      TSAV=0.5*(TS2+TS(L))
      IF(TPRS(J).GE.TSAV)GO TO 445
      TPRS(J)=TSAV
      TAIR(J)=TSAV+CN2/CN(L)*(TB2-TSAV)
 445  CONTINUE
D     WRITE(6,440)J,TB1,TS1,P1,CN1,TA1,CNU1,TB2,TS2,P2,CN2,TA2,CNU2,TBB,
D    1TSB,PB,CNB,TAB,CNUB,DP,DTB,DN,DTA,DT,TSTAR,TAIR(J),TPRS(J),BTA(J),
D    2TSAV
D440  FORMAT(3H0J=I3,10X17HTB,TS,P,CN,TA,CNU/
D    15X1H1,2F8.1,F8.0,F8.4,F8.1,F8.4/
```

```
D     25X1H2,2F8.1,F8.0,F8.4,F8.1,F8.4/
D     35X1H8,2F8.1,F8.0,F8.4,F8.1,F8.4/
D     44H DP=F8.0,5X4HDTB=F8.1,5X3HDN=F8.4,5X4HDTA=F8.1,5X3HDT=F6.3/
D     57H TSTAR=F8.1,5X5HTAIR=F8.1,5X5HTPRS=F8.1,5X5HBETA=F8.1,5X5HTSAV=F
D     68.1)
 450   XPB(J)=0.0
        IF(TAIR(J).NE.TPRS(J))XPB(J)=(TAIR(J)-TB(J))/(TAIR(J)
      1-TPRS(J))
        BTTS(J)=BTA(J)/TSTAR
D       WRITE(6,280)J,TIN(J),TAIR(J),TPRS(J),TSTAR,BTA(J),XPB(J),BTTS(J)
 460   CONTINUE
C
        DO 926 J=1,NT
D       WRITE(6,925)TIN(J),TB(J),CN(J),(TI(I,J),I=1,NTI)
D925    FORMAT(1H0,F10.3,F10.2,F15.4/(1H ,7F10.2))
 926   CONTINUE
C
C       CALCULATION AND DISPLAY OF PRESSURANT FRACTIONS
C
 800   CALL CODE
        WRITE(IOBUF,802)(A(I),I=1,10)
 802   FORMAT(36H1INFERRED PRESSURANT DISTRIBUTION - ,10A4)
        CALL WRITF(OBUF,IERR,IOBUF,38)
        IF(IERR.LT.0)CALL ERR(IPAR(1),IERR)
        CALL WRITF(OBUF,IERR,CBUF1,32)
        IF(IERR.LT.0)CALL ERR(IPAR(1),IERR)
        CALL CODE
        WRITE(IOBUF,803)(I,I=1,13)
803     FORMAT(28H (SEC)  MEAN  AIR PRESSURANT,20X9HMEAN I = I1,12I6)
        CALL WRITF(OBUF,IERR,IOBUF,65)
        IF(IERR.LT.0)CALL ERR(IPAR(1),IERR)
C
C       CONSTRUCT A LINE OF BLANKS
C
        DO 804 I=1,100
 804    IOBUF(I) = IBLANK
C
C
 806   FORMAT(1H ,F5.1,3F6.1,F8.1,F8.4,F12.3,F6.3,12F6.3)
        TME=0.0
        XPI=0.0
        TB(L)=TB(L)-273.2
        CALL WRITF(OBUF,IERR,CBUF3,12)
        IF(IERR.LT.0)CALL ERR(IPAR(1),IERR)
        CALL CODE
        WRITE(IOBUF,806)TME,TB(L),TB(L),BTA(L),BTTS(L),XPB(L),(XPI,I=1,13)
        CALL WRITF(OBUF,IERR,IOBUF,66)
        IF(IERR.LT.0)CALL ERR(IPAR(1),IERR)
C
C     NOTE!!!! THIS HAS TO BE CHANGED TO COINCIDE WITH WHAT IS AVAILABLE
C       IN SCANS AND WHAT CINST IS EXPECTING. THE KB=L+100  THE 100 HAS TO
C       BE CHANGED.
C
C
        KA=L+1
        KB=L+100
C
        DO 850 K=KA,KB
        TME=TIN(K)-TIN(L)
C
```

```
      DO 830 I=1,13
      XP(I)=0.0
      IF(TAIR(K).NE.TB(K))XP(I)=1.D0*XPB(K)*(TAIR(K)-TI(I,K))/
     1(TAIR(K)-TB(K))
 830  CONTINUE
      TB(K)=TB(K)-273.2
      TAIR(K)=TAIR(K)-273.2
      TPRS(K)=TPRS(K)-273.2
      IF(K.NE.L+2)GO TO 831
      CALL WRITF(OBUF,IERR,CBUF4,9)
      IF(IERR.LT.0) CALL ERR(IPAR(1),IERR)
 831  IF(K.NE.M-2)GO TO 832
      CALL WRITF(OBUF,IERR,CBUF5,12)
      IF(IERR.LT.0)CALL ERR(IPAR(1),IERR)
 832  IF(K.NE.M)GO TO 833
      CALL WRITF(OBUF,IERR,CBUF6,10)
      IF(IERR.LT.0)CALL ERR(IPAR(1),IERR)
 833  CALL CODE
      WRITE(IOBUF,806)TME,TB(K),TAIR(K),TPRS(K),BTA(K),BTTS(K),XPB(K),
     1(XP(I),I=1,13)
      CALL WRITF(OBUF,IERR,IOBUF,66)
 850  IF(IERR.LT.0)CALL ERR(IPAR(1),IERR)
C
CC    CALL WRITF(OBUF,IERR,CBUF2,61)
CC    IF(IERR.LT.0) CALL ERR(IPAR(1),IERR)
C
C     RETURN TO BEGINNING OF PROGRAM
C
      GO TO 10
C
C     CONSTRUCT LINE OF BLANKS
C
9090  DO 9091 I=1,100
9091  IOBUF(I)=IBLANK
C
C     CHECK FOR EOF MARKER
C
      CALL WRITF(OBUF,IERR,XES,2)
      IF(IERR.LT.0)CALL ERR(IPAR(1),IERR)
C
      DO 9092 I=1,4
      CALL WRITF(OBUF,IERR,IOBUF,100)
 9092 IF(IERR.LT.0)CALL ERR(IPAR(1),IERR)
C
C     DETERMINE THE ACTUAL LOCATION OF THE RECORD POINTS
C
      CALL LOCF(OBUF,IERR,IDUM,IRB,IDUM,ISEC)
      IF(IERR.LT.0)CALL ERR(IPAR(1),IERR)
      ITRUN = ISEC/2 - (IRB - 1)
C
C     CLOSE THE DISK FILE
C
      CALL CLOSE(OBUF,IERR,ITRUN)
      IF(IERR.LT.0)CALL ERR(IPAR(1),IERR)
C
C     PRINT ENDING MESSAGE
C
      WRITE(IPAR(1),2000)NAME2
      STOP
      END
```

```
C
C*************************************************************
C SUBROUTINE TO PRINT OUT FMP ERRORS AS THEY OCCUR
C FMP ERROR DESCRIPTIONS ARE LOCATED IN 'RTE 4B
C PROGRAMMERS' RET SPOOLING MANUAL'
C
      SUBROUTINE ERR(LU,IERR)
      INTEGER LU,IERR
      WRITE(LU,10)IERR
   10 FORMAT(' IERR = ',I6)
      STOP
      END
C*************************************************************
      END$
```