REPORT NO. AER 1263

AD

AD A139160

ORGANIC RANKINE CYCLE SILENT POWER PLANT, 1.5 KW, 28 VDC

FOR

U. S. ARMY MOBILITY R & D CENTER

FORT BELVOIR, VIRGINIA

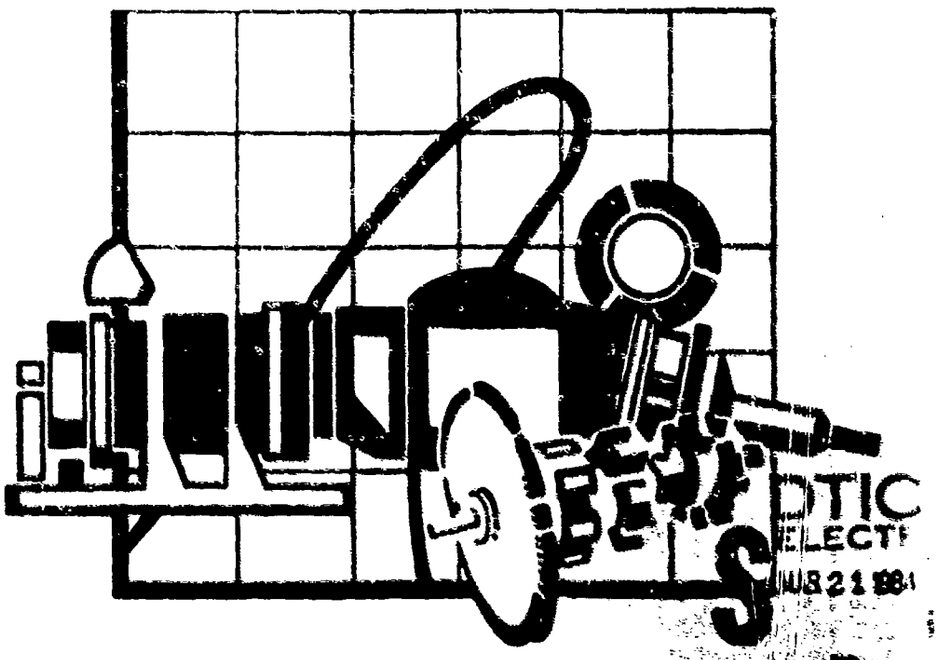

DTIC
ELECTE
JUN 21 1984
D

Sundstrand Energy Systems

DTIC FILE COPY

DISTRIBUTION STATEMENT A
Approved for public release;
Distribution Unlimited

DC 4 1977

NOTICES

DISTRIBUTION STATEMENT

THIS DOCUMENT HAS BEEN APPROVED FOR PUBLIC RELEASE AND SALE. ITS DISTRIBUTION IS UNLIMITED.

DISCLAIMERS

THE FINDINGS IN THIS REPORT ARE NOT TO BE CONSTRUED AS AN OFFICIAL DEPARTMENT OF THE ARMY POSITION, UNLESS SO DESIGNATED BY OTHER AUTHORIZED DOCUMENTS.

THE CITATION OF TRADE NAMES AND NAMES OF MANUFACTURERS IN THIS REPORT IS NOT TO BE CONSTRUED AS OFFICIAL GOVERNMENT ENDORSEMENT OR APPROVAL OF COMMERCIAL PRODUCTS OR SERVICES REFERENCED HEREIN

DISPOSITION

DESTROY THIS REPORT WHEN IT IS NO LONGER NEEDED. DO NOT RETURN IT TO THE ORIGINATOR.

Accession For
NTIS GRA&I ☒
DTIC TAB ☐
Unannounced ☐
Justification
By Per DTIC Form 50
Distribution/on file
Availability Codes
Dist | Avail and/or Special
A/1

REPORT NO. AER 1263
DATE 9/22/75
REVISION _____ DATE _____

SUNDSTRAND AVIATION
DIVISION OF SUNDSTRAND CORPORATION
ROCKFORD, ILLINOIS

DAAK02-72-C-0472

ENGINEERING REPORT

ORGANIC RANKINE CYCLE SILENT POWER PLANT, 1.5 KWe, 28v DC FOR ELECTROTECHNOLOGY DEPARTMENT ELECTROMECHANICAL DIVISION U. S. ARMY MOBILITY R & D CENTER FORT BELVOIR, VIRGINIA 22060

DTIC
ELECTE
MAR 21 1984
S D
D

DISTRIBUTION STATEMENT A
Approved for public release;
Distribution Unlimited

APPROVAL AND CLASSIFICATION

Material Distribution Only	DIRECTOR OF ENGINEERING	DATE
Controlled Distribution (See EN 18 87)	S. S. Bob — DIRECTOR OF ENGINEERING	DATE 11-18-75
Distribution Prohibited	DIRECTOR OF ENGINEERING	DATE

Military Contract No. _____

Withheld by Act of Congress _____
Withheld by Supervision _____
JAMES DEASE, ROCKFORD — DATE

Ronald J. McKenna — PREPARED BY	10-20-75 DATE
Ronald J. McKenna — SECOND ENGINEER	10-20-75 DATE
[illegible]	[illegible] DATE
[illegible]	DATE
DT [illegible]	DATE
MGR. QUALITY ASSURANCE	DATE

Form 5160.1

SECTION I

ACKNOWLEDGEMENT

I. ACKNOWLEDGEMENT

Many individuals and groups have worked enthusiastically toward developing this Organic Rankine Cycle Silent Power Plant. While all individuals cannot be identified, following is a list of those who formed a nucleus on this extension program. Louis Suit, Roland Christen, Gary Peach, Timothy Bland, William Smith, and many other support individuals and groups.

SECTION II

TABLE OF CONTENTS

TABLE OF CONTENTS

Section		Page No
I	ACKNOWLEDGEMENT	1
II	TABLE OF CONTENTS	2
III	INTRODUCTION	3
	Set 1 Development Summary and Conclusions	4
	Set 2 Improvement Plan	6
IV	SUMMARY	10
V	DESCRIPTION	15
VI	COMPONENT DEVELOPMENT	24
	Constant Frequency Motor	24
	Noise	24
	Gearbox Noise	24
	Noise Frequencies Identification from Test Data	28
	Improvements in Gear Noise Reduction	29
	CRU Noise	34
	Offset Gearbox	35
	CRU (Combined Rotating Unit)	44
	Valves	56
	Pitot Pump	56
	Boost Pump	56
	Start Approach	60
VII	SYSTEM DEVELOPMENT	69
	Steady State Operation	69
VIII	IMPROVEMENTS	98
	Startup	98
	Output Power and Efficiency	98
	Repackaging Concept	108
IX	CALIBRATION REQUIREMENTS SUMMARY	110

SECTION III

INTRODUCTION

III. INTRODUCTION

Under USAMERDC Contract DAAK02-72-C-0472, Sundstrand has been developing an organic Rankine cycle, 1.5 KWe, 28 VDC, portable silent power plant. A summary of the specification requirements is presented in Table III-A. To date, two (2) development sets have been delivered to USAMERDC, Ft. Belvoir, Va. The development of Set 1 is described in Sundstrand Report ATR 1182, 6-24-74; the following report describes the development of Set 2. The following introductory paragraphs summarize the results of Set I development and the basis for improvements planned for Set 2.

Table III-A Specification Requirements

- 1.5 KW, 28 VDC, Closed Rankine Cycle
- Portable, skid mounted
- Silent at 100 meters
- Capable of withstanding extremely hard usage encountered in military field application simulated by free fall flat and end drop (18 and 12 inches respectively), vibration, railroad impact at 10 mph and in transit road test
- Locally or remote station startup within 10 minutes by an integral stored energy source and a manual or external energy source
- 65°F to $+125^{o}$F ambient temperature, any humidity
- Minimum 3000 hours operating life
- Minimum 7.5% Set efficiency at 1.5 KW output
- Maximum 150 lb. dry weight
- Maximum 8 cubic foot volume
- Multi fuel operation
- Inclined operation, $31^{o}$from horizontal
- Minimum 95% Set reliability
- Start and operate at 1.5 KW in rain and wind (12 in/hr and 40 mph respectively)
- 4% voltage regulation, 2 seconds recovery time, 2% voltage stability, 26-34 volts adjustment, 3% voltage ripple, adjustable current limit, 30% voltage dip and rise, overload of 110% and overspeed of 125%
- Design for human performance and engineering
- Major component characteristics
  - Boiler-Burner: Heatup to operating temperature and pressure in three minutes, equipped with automatic controls, electrical power supplied from alternators
  - Working Fluid Circulating System: Includes condenser, preheater if required, feed pump. No significant working fluid loss for two years or 10,000 hours of operation
  - Throttle Valve: Used to control vapor flow
  - Governor: Required to sense and control engine speed to essentially a constant level
  - Condenser: Must be compact, light weight, vapor to air using blower(s).
  - Regenerator: Utilize if overall cycle efficiency can be improved
  - Lubrication System: Must be suitable for moving parts and hermetically sealed for engine
  - Alternator: To be brushless and have a static excitation system
  - Fuel System: Includes ignition source, integral fuel pump capable of pumping through a 25 foot line with a six foot static suction head, lines, filter and positive shutoff
  - Battery and charger
  - Controls for pressure, speed, temperature and power conditioning

SET 1 DEVELOPMENT SUMMARY AND CONCLUSIONS

The program consisted of:

- Packaged development Set and breadboard controls
- Limited component and subsystem testing
- No breadboard system testing

In terms of development effort, some of the critical subsystems of Set No. 1 resulted in:

- Air/Fuel System developed - more than 100 hours of operation
- Turbine development - 2900 hours of bearing testing
- Breadboard control system demonstrated/operational

A significant amount of set testing resulted in:

- 69 hot tests
- 15 hours of hot testing on the turboalternator, regenerator and condenser
- 20 hours of hot testing on the heater and burner
- 75 hours of operation on all accessories

There were several nuisance types of problems encountered throughout the Set 1 development period, some of these were resolved. There were major problems which were identified, including potential solutions. These prevented complete self-contained operation and full power output from being demonstrated and are listed below

- Low turbine performance
- Apparent low turbine exhaust temperature
- Structural flexibility of the turbine balance assembly and hotwell
- Pitot pump performance

It was demonstrated that low turbine performance was primarily due to too large spacing of the turbine nozzles and correcting this would enable at least 84% of predicted turbine power to be achieved. Figure III 1 shows the data for the Set No. 1 nozzle plate and a test nozzle plate with close spaced (touching edge to edge) nozzles (Figure III 2). With the exception of the one point taken from set data, all data are for tests conducted on a test rig using high pressure nitrogen to drive the turbine. It can be seen that the original nozzle plate produced 48% of the predicted turbine efficiency. By reducing the nozzle spacing, the turbine views a continuous rather than intermittent driving gas stream as the wheel rotates past each nozzle. The result is a substantial increase in turbine efficiency.

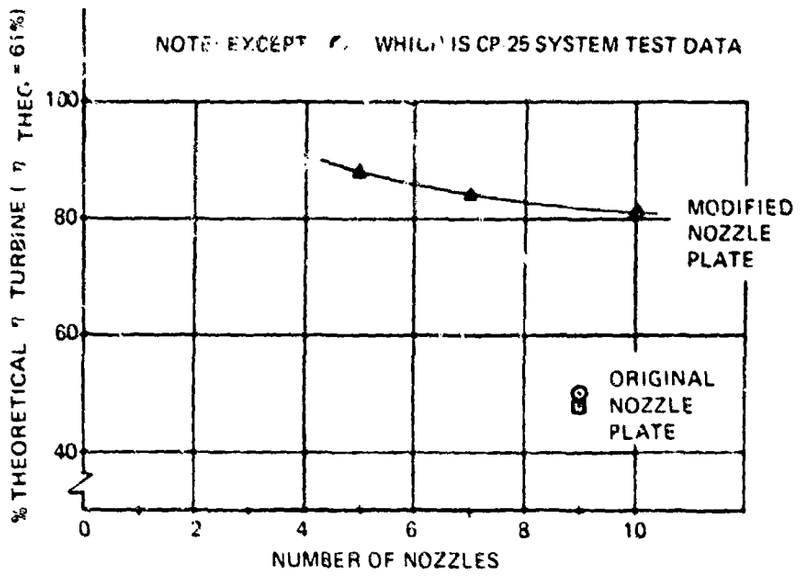

Figure III-1 N_2 Test Results

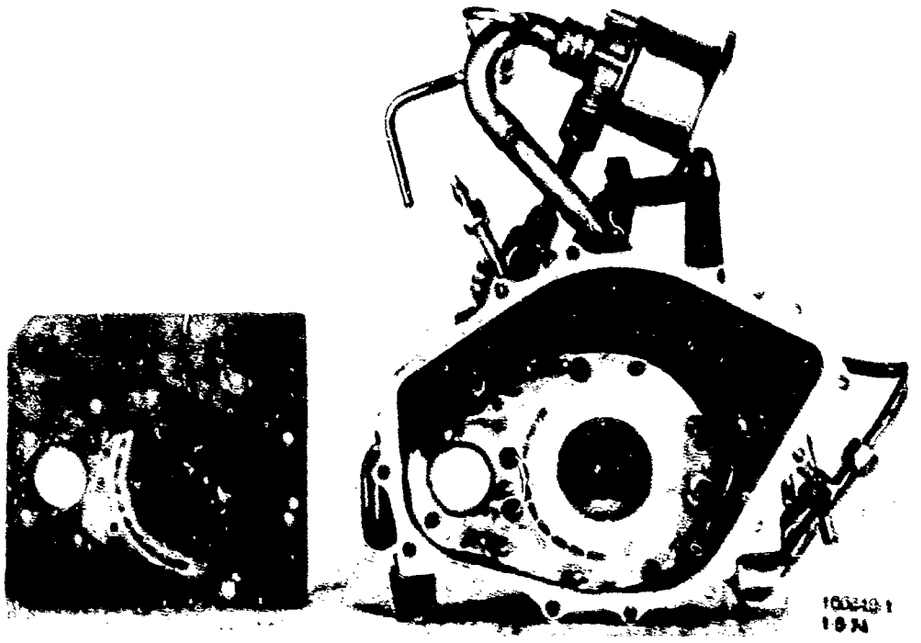

Figure III-2 Test and Set 1 Nozzle Plates

The resultant projected system performance with the modified nozzle plate is shown in Figure III 3 to be 1.1 KW net output at an average 8 active nozzles which corresponds to the maximum flow that the system can support. The burner has overfire capability but of unknown extent. However, at 10 active nozzles (the limit of the present design), 1.47 KW net output power can be produced. Whether this can be achieved is dependent upon the extent of the overfire capability, the heat exchangers, the achievable reduction in parasitic power and the turbine pump characteristics.

Another problem was low turbine exhaust temperature. It was hypothesized that quenching of the turbine exhaust was occurring due to fluid migrating from the pitot pump area. Shifting the pitot pump from the turbine wheel end of the assembly would permit any leakage to fall to the hotwell. The Set No. 1 and revised configurations are shown in Figure III 4.

Also, the flexibility of the turbine balance assembly and hotwell, or the CRU (combined rotating unit), has resulted in rubbing at the turbine wheel hub and pitot pump housing regions. These have all been light and non-damaging in nature but nonetheless result in undesirable noise, vibration and power consumption. Improved balancing, an increase in the shaft diameter and noncantilevered mounting of the turbine balance assembly in the hotwell have shown by test to be an improvement.

SET 2 IMPROVEMENT PLAN

The following improvements were considered advantageous to incorporate into Set No. 2 which comprises the basis of this report.

CRU redesign	Includes a new, close spaced nozzle plate, stiffening of the forward and aft hotwell housings, larger diameter shaft, shifting the pitot pump aft and moving the bending critical speeds above the 55,000 rpm operating speed.
Boost pump	Improving the capability of the boost pump to operate with a boiling fluid will improve operation margin.
Noise reduction	Several sources of emitted noise include the CRU (housing resonance) and accessories such as condenser fan and gearbox, should be identified and reduced to acceptable level.
Control valves	Sticking of the control valves appears to be related to clearances, contamination and coil size, reliability of operation should be improved through correction.
Packaged controller	The present (Set No. 1) breadboard controller should be packaged into a configuration consistent with mounting in the unit.

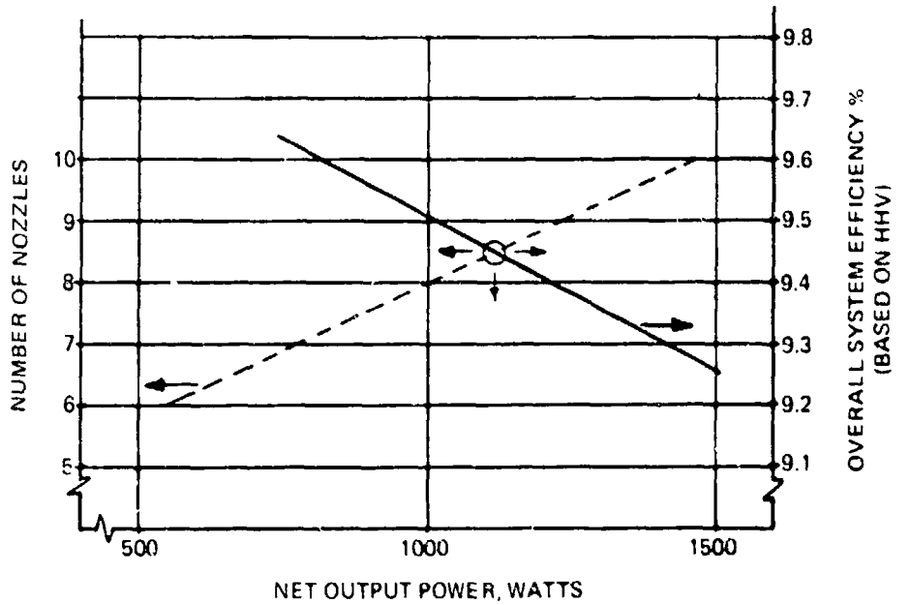

Figure III-3 Projected System Performance

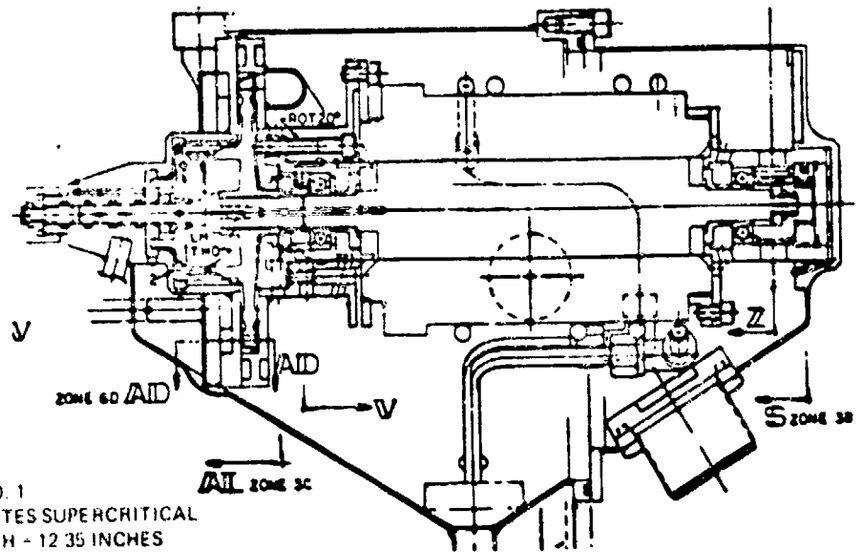

SET NO. 1
OPERATES SUPERCRITICAL
LENGTH - 12 35 INCHES
REF EP 2559 1001

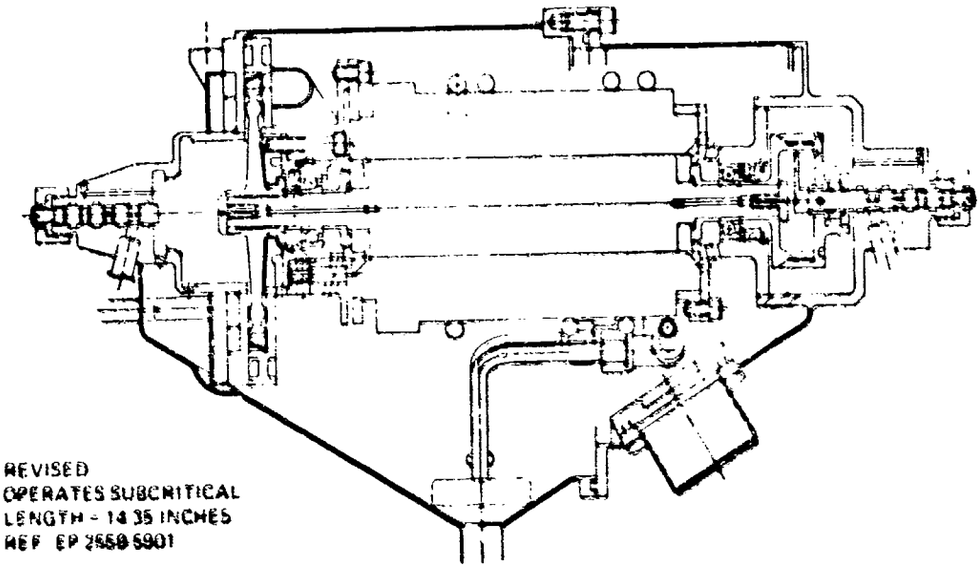

REVISED
OPERATES SUBCRITICAL
LENGTH - 14 35 INCHES
REF EP 2559 5901

Figure III-4 Set No. 1 and Revised CRU Configurations

Parasitic power reduction	Accessory power is considerably higher than desired and those areas where reduction is readily achievable should be investigated.
Startup	The Set No. 1 startup method involves retaining pressure in the accumulator from the shutdown and/or pressurizing as required to the desired level by the handpump. Both start pressure and start flow valves must be extremely leak tight. Other approaches, which may be simpler, e.g., start pump assisted starts, should also be investigated.

SECTION IV

SUMMARY

IV SUMMARY

This report is a summary of the development of a 1.5 KWe, 28 VDC organic Rankine cycle power plant. It specifically describes the degree of progress made between Set 1 and Set 2. Set 1 was described in Report ATR 1182 and delivered to USAMERDC at Ft. Belvoir in the first quarter of 1974. Set 2 is described in this report and was delivered in the first quarter of 1975.

Figure IV-1 is a photo of Set 2. Table IV-A summarizes its characteristics and Table IV-B is a summary of the 1.5 KW organic Rankine cycle modification benefit matrix. The Set is a low volume (~2' x 2' x 2'), low weight (212 lb), multifuel (demonstrated on MIL-T-5161 primary fuel and W-F-800 alternate fuel) machine that has had several improvements incorporated. Relative to Table IV-B these include all of Item 1.0, 2.0, 4.0, 5.0, 6.0, 7.0 and part of 8.0.

Except for battery start, the set is self-sufficient. Output power has been as high as 477 watts. The set has not achieved design power (1.5 KW) primarily due to heat losses and shunts within the machine, slightly lower than design turbine efficiency and lower pitot pump efficiency. Of these, the pitot pump predominates. A small effect in low output power is due to the regenerator effectiveness and heater efficiency being lower on Set 2 than that demonstrated on Set 1.

The lower pitot pump efficiency is attributed to changes in the pump housing and the pitot probe between Set 1 and Set 2. When designing the pump for Set 2, an approach thought to not functionally impact the pump performance was followed to reduce fabrication cost. This has proved to be detrimental.

Set 2 is a functional power plant. Its deficient output power needs correction through improvement in the performance of the components contributing most to the problem. Table IV-C summarizes these improvements and the resulting output power using actual test data presented in this report as a basis.

Other areas in need of further development include automatic startup and noise level, neither of which meet specification requirements although improvements have been made in both areas in progressing from Set 1 to Set 2.

Other areas where improvements have been made include control valves that are free from sticking, a significant reduction in parasitic power (approximately 76 watts), and an improved boost pump.

Set 2 is a significantly improved functional unit compared to Set 1 and represents a considerable step towards evolving a portable multifuel, 1.5 KWe, 28 VDC, silent power plant.

Figure IV-1 Set No. 2 on Test Stand

Table IV-A Power Plant Characteristics

Production Prototype Package	
Weight:	212 lb.
Volume:	7.7 cu. ft.
Performance:	Tests show potential for thermal efficiency of 10.4-13.9%
Durability:	In accord with specification
Operation:	1500 hrs. on CRU bearings 60 hrs. on accessories each Set 20 hrs. on hermetic system each Set Demonstrated multi-fuel capability Packaged controls demonstrated
Other:	Reduced gearbox noise (Set 2 lower than Set 1) Reduced start complexity (Set 2 less complex than Set 1) Reduced parasitic power (Set 2 lower than Set 1)

Table IV-8 1.5 KW Organic Rankine Cycle Modification – Benefit Matrix

MODIFICATION	COST		WEIGHT		EFFICIENCY		RELIABILITY		NOISE		
	Reduce	Increase	Reduce	Increase	Reduce	Increase	Reduce	Increase	Reduce	Increase	Comments
1.0 Eliminate											
1.1 Accumulators	X		X					X			
1.2 Handvalves	X		X					X			
1.3 Stop Flow Valve	X		X			X		X			
1.4 Stop Pressurization Valve	X		X			X		X			
1.5 Hand Pump	X		X					X			
1.6 Temperature Ready Circuit	X		X			X		X			
2.0 Use three phase motors to obtain constant speed accessories		X				X		X			
3.0 Modify relay logic	X		X			X		X			
4.0 Add Start Pump		X		X	X			X		X	
5.0 Redesign Nozzle Plate						X					
6.0 Relocate Pilot Pump						X		X	X		
7.0 Redesign Boost Pump				X				X			
8.0 Redesign Accessory Drive(s)	X						X		X		
9.0 Add Panel of Fire Circuit		X		X		X		X			
10.0 Redesign Electronics	X		X			X		X			
11.0 Add Acoustical Damping		X		X					X		
12.0 Redesign Variable Speed Motor						X					
13.0 Redesign Heater	X		X			X		X			
14.0 Redesign Regenerator	X		X			X		X			
15.0 Redesign Turbine						X					

Table IV-C Improvements

Improvements

Turbine:	Increase lap ratio to raise turbine efficiency from mid-50's to design point of 62%; requires no R&D.
Pitot Pump:	Increase efficiency by reducing drag, recirculation losses and housing effects through examination of variables experimentally.
Regenerator:	Lower effectiveness of Set 2 compared to Set 1 hypothesized due to sidewall leakage; design to eliminate.
Heater:	Lower η of Set 2 compared to Set 1 hypothesized due to manufacturing QC; improve and go to fin-tube design.

Performance Expections

	Output Power
At $\eta t = .58$	.35–.65 KW (met)
Plus reduced heat loss	.38–.68
Plus design regenerator effectiveness	.60–.85
Plus design pitot pump efficiency	1.1–1.43
Plus design heater efficiency	1.2–1.57
Plus increased fuel flow	>1.5 KW (net)
System thermal efficiency (based on HHV)	10.4–13.9%

Output power improvement would also be achieved in a variety of other ways including reduced parasitics, improved rectifier efficiency and increased generator performance.

SECTION V

DESCRIPTION

V. DESCRIPTION

A general description is presented, followed by a description of how Set No. 2 differs from Set No. 1.

The Set uses a supercritical closed loop organic Rankine cycle with CP-25 as the working fluid. Figure V-1 shows a working fluid flow schematic and corresponding TS diagram.

The general overall mechanical arrangement of the Set is shown in Figure V-2 with some of the details in Figure V-3. All of the components are mounted to a common support plate which is shock mounted from the main support structure. The condenser regenerator, battery/instrument compartment, and condenser fan are located in the upper portion of the unit. The rest of the components are located in the lower section.

Protection of the unit from rough handling is provided by a tubular frame surrounding the unit. For further protection, including environmental conditions, covering and weather cap are provided. The weather cap is aluminum with a layer of sound absorption material bonded to the inner side. The upper cover is a fiberglass shroud while the lower covering consists of five panels of an aluminum/rubber honeycomb composite. These materials provide protection as well as reduce emitted noise.

Easy access to all interface points is provided though the Set is tightly packaged. Both the burner exhaust and cooling air flow merge in the unit and exit through the opening between the upper portion of the shroud and the weather cap. When operating in an enclosure where warm air exhaust is to be used as space heat, the burner exhaust can be separately ducted away.

Access to the operator interface points is provided through the hinged front door. This area exposes the hand crank, hand pump, manual valves, fuel reservoir and fuel filter. The battery door is also hinged for access and battery replacement. Electrical and fuel hook-up points are accessible externally since these connectors protrude through recesses in the side panels. For maintenance purposes, all panels may be removed using a screwdriver.

A system schematic of Set No. 1 is shown in Figure V-4, and Figure V-5 illustrates the schematic for Set No. 2 along with identification of instrumentation. Figure V-6 is a functional schematic of the working fluid portion of the system. It can be seen that for Set No. 2, the accumulators, a bank valve, the start pressure valve, a check valve, the hand pump and the air compressor solenoid valve have been eliminated. Instead of a pressurized accumulator start, a start pump is used which reduces the start complexity considerably. Table V-A is a weight summary of Set 2.

The controller of Set 2 is slightly different to that of Set 1 due to the component changes and development improvements as the following list indicates:

Set 1	Set 2
Fixed inverter	Purchased
Start pressure valve	Eliminated
Temperature ready circuit	Eliminated

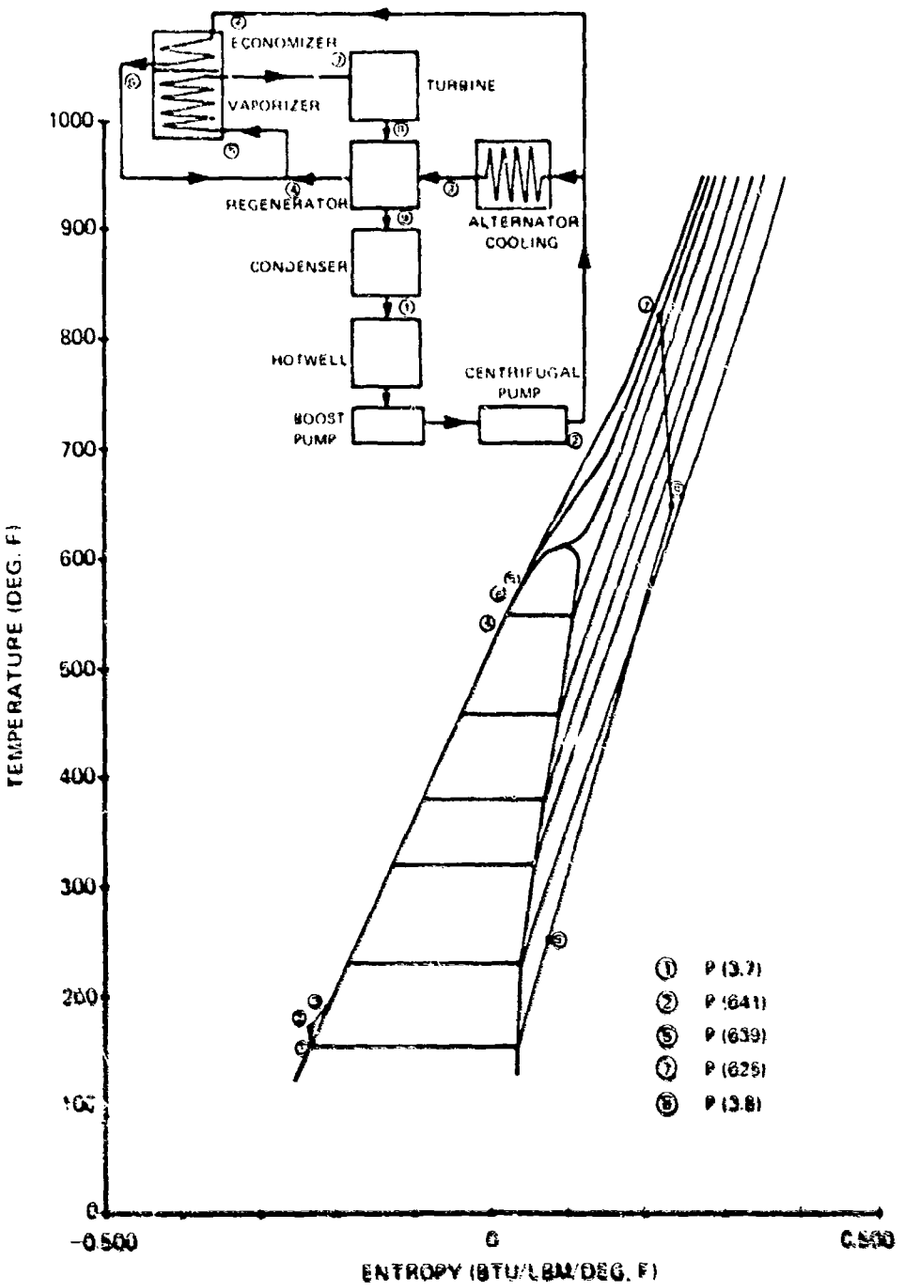

Figure V-1 Working Fluid Flow Schematic and T-S Diagram

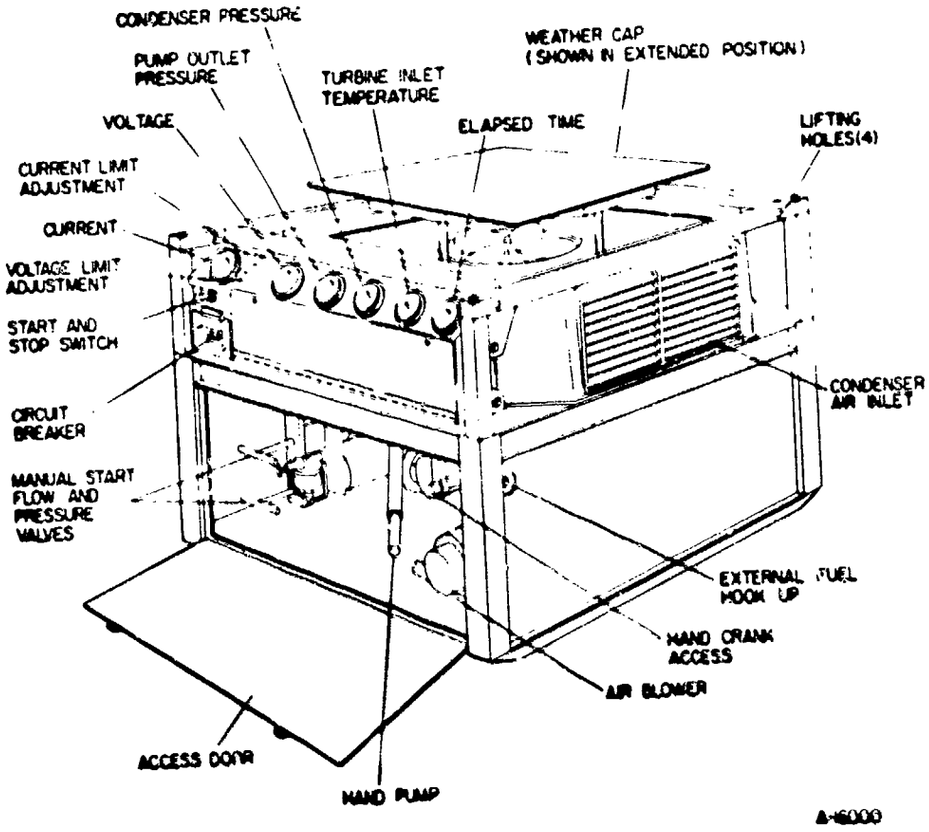

Figure V-2 Power Plant

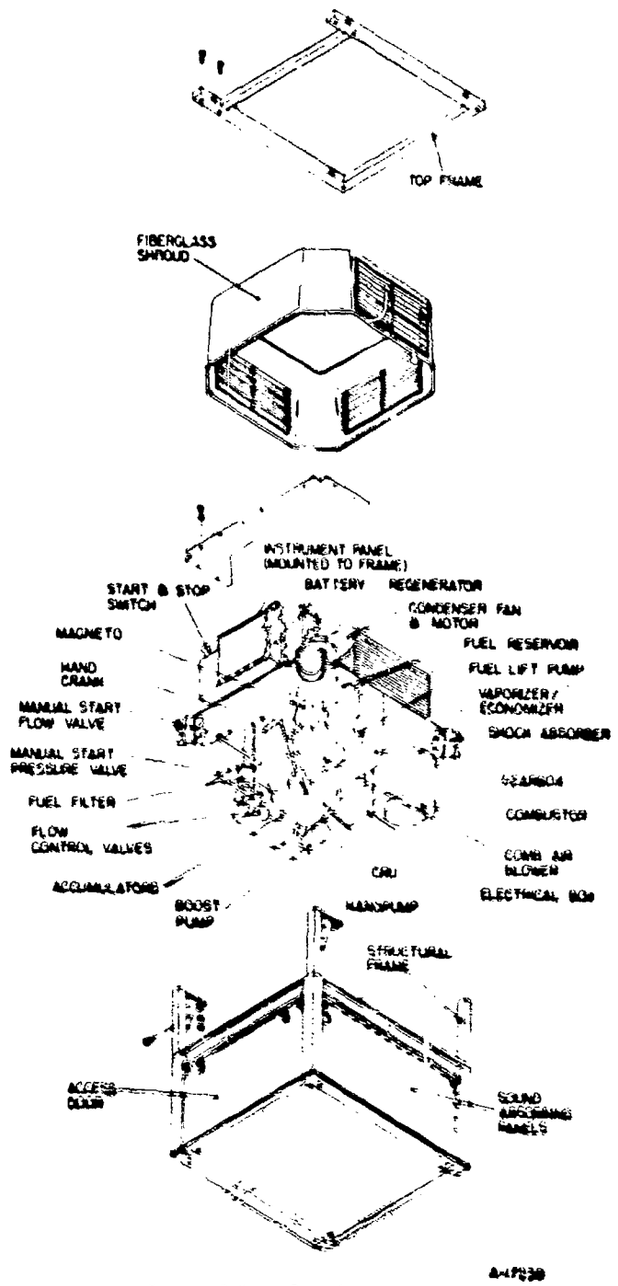

Figure V-3 Power Plant Arrangement

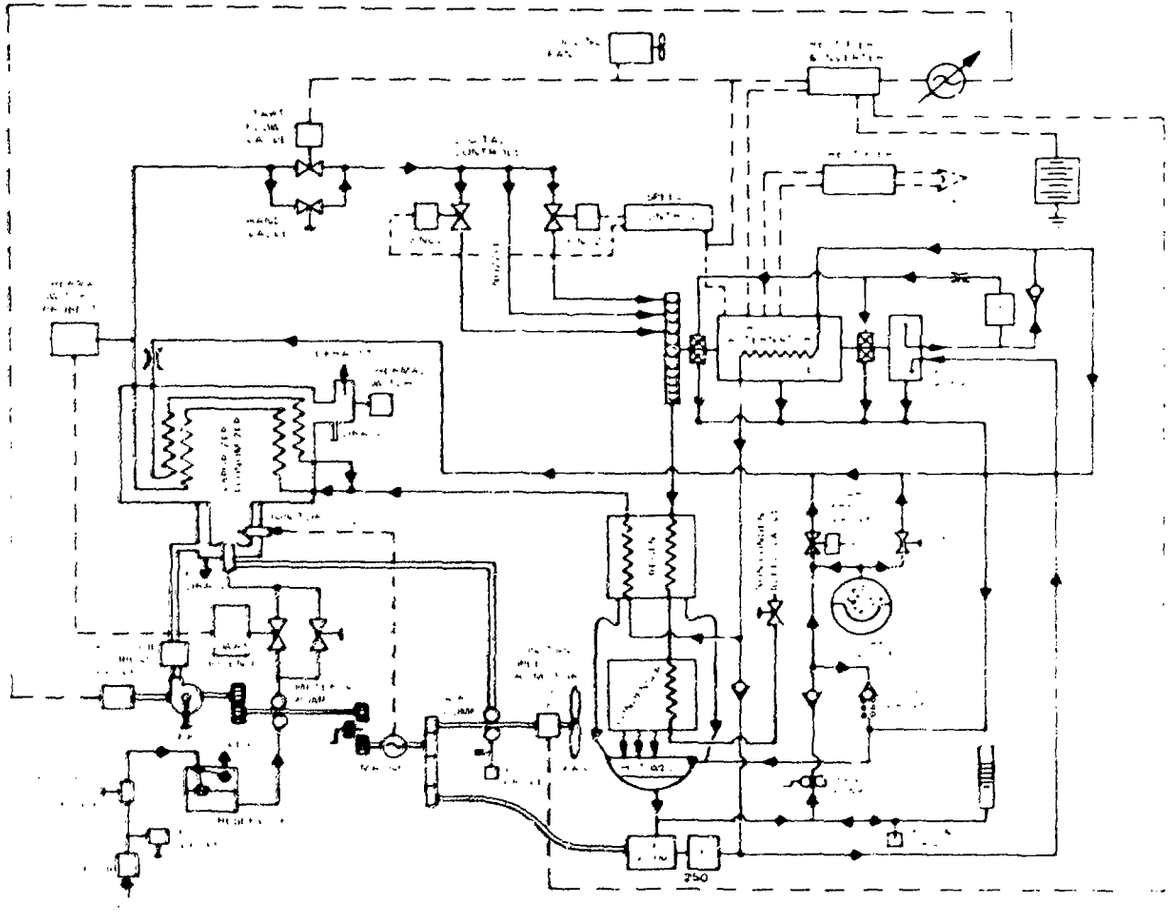

Figure V-4 Set 1 System Schematic

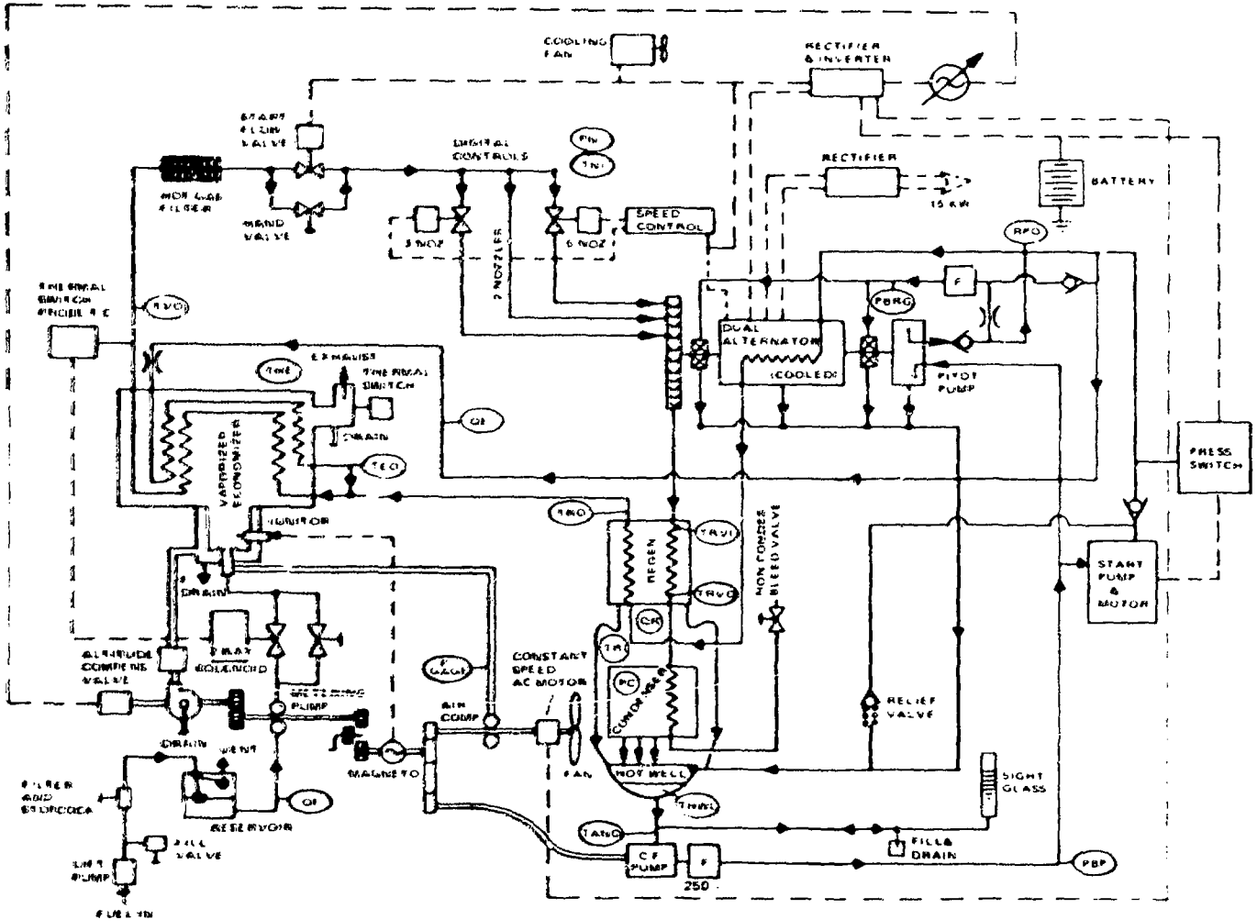

Figure V-5 Set 2 System Schematic

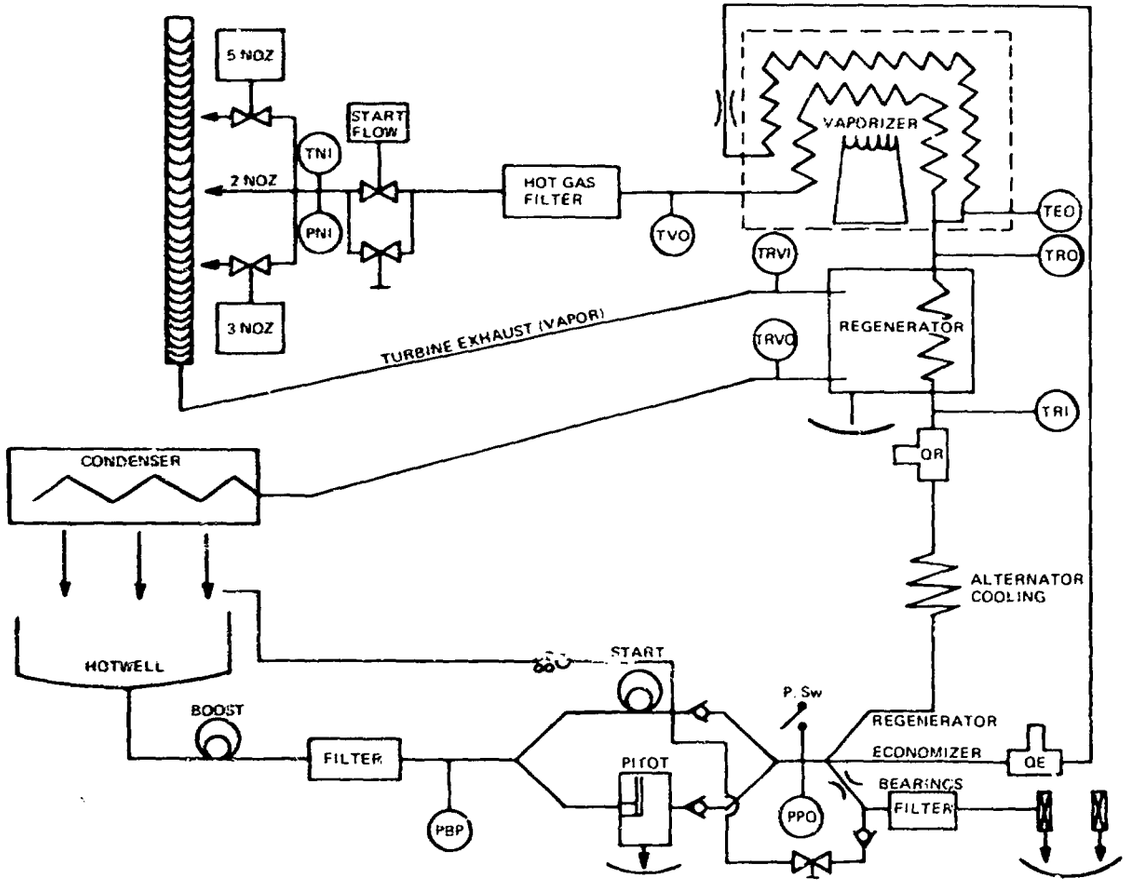

Figure V-6 1.5 KW MERDC Functional Schematic

Table V-A Set 2 Weight Summary

Combustor Extension + Sight Tube	3.450 lb.
Hot Gas Filter	1.450 lb.
Shutoff & Control Solenoid Valve (S.B. 1.264 ea.)	3.795 lb.
Boost Pump (Gear Type)	1.812 lb.
Boost Pump Inlet & Outlet Plumbing + Fittings	0.700 lb.
Constant Frequency Fan	0.063 lb.
Condenser Overpressure Switch	0.512 lb.
Start Pump (.700), Motor (5.013), Coupling (3.000*)	9.713 lb.
Shutoff Hot Gas & Fill Hand Valves (1.000 ea.)	2.000 lb.
Battery and Gage Box	2.870 lb.
N–C Battery (9.637), Retainer (.250)	9.887 lb.
Constant Frequency Motor	6.575 lb.
Controller + Cover	9.188 lb.
Lift Pump, Fuel Sol. Valve, Bracket	2.000 lb.
Variable Frequency Blower, Motor, Mount Assy.	5.437 lb.
Magneto + Cable	3.000 lb.
Atomizing Air Compressor	2.938 lb.
Fuel Reservoir	0.563 lb.
Altitude Compensating Valve	0.375 lb.
Gages (.563 ea.)	3.380 lb.
Turbine-to-Regenerator Bellows	0.188 lb.
Combustor	1.250 lb.
Fuel Metering Pump, Coupling, Screws	0.300 lb.
Condenser Assy.	12.375 lb.
Fiberglass Cover (6.938), Weather Cap (2.500)	9.438 lb.
Regenerator	7.750 lb.
Panels (4 Sides + Bottom)	6.750 lb.
Heater	32.000 lb.
Accessory Gearbox (Lower)	5.100 lb.
Offset Gearbox (Upper*)	1.625 lb.
CRU (Noz. Plt. = 11.1, Aft Cover = 6.11, Bal. Assy. = 17.3	34.510 lb.
Frame, Shocks, Mount Plate	26.900 lb.
Miscellaneous*	2.706 lb.
Total Dry Weight	209.600 lb.
Total Wet Weight (2.4 lb. CP-25*)	212.000 lb.

* Estimates; all others are measured weights

Controller cooling fan	Eliminated
Solenoid air compressor valve	Eliminated
Accumulator underpressure	Eliminated
Eliminated	Start pump pressure switch
Eliminated	Start pump soft start circuit

The fixed inverter was purchased for Set 2 and mounted outside the controller, consequently, the cooling fan was eliminated due to lower controller heating. For the pump assisted start, the temperature ready, accumulator underpressure and the start pressure valve circuits were not necessary. The combustor was determined to operate satisfactorily at low fire without reduction in air compressor pressure, consequently, the solenoid valve was eliminated. A pressure switch was added to shut off the start pump after the pitot pump takes over. For startup, to prevent overriding the start pump magnetic drive, a soft start circuit was also added.

SECTION VI

COMPONENT DEVELOPMENT

VI. COMPONENT DEVELOPMENT

Development tests were performed on the constant frequency motor to reduce parasitic power, the noise output of the accessory components, the boost pump to improve cavitation sensitive characteristics, the pitot pump to develop a cheaper manufacturing process, the control valves to provide more reliable operation, and the CRU to develop a higher efficiency, more vibration free and less noise producing assembly.

Following is a discussion of each of these development items:

CONSTANT FREQUENCY MOTOR

The constant frequency circuit consists of motor, inverter, gearbox, cover, magneto, boost pump, air compressor and condenser fan. It was predicted to draw 210 watts and measured to be 360 watts. Without the cover, the power consumption was 346 watts, and the largest difference between this and predicted was due to the 1 phase motor being 43% efficient. A 3 phase motor and inverter were designed. The test data is shown in Figures VI-1 and VI-2. In the operating region, the motor runs at 65% efficiency for an input power requirement of 270 watts.

When compared to the 1 phase motor/inverter, a power savings of about 76 watts is achieved and a start relay and capacitor are eliminated.

NOISE

The noise level of Set No. 1 was excessive. This was largely due to the vibration of the turbine rotating assembly inducing resonances in the hotwell fore and aft shells in which it is mounted. A variety of tests were conducted (at MERDC) using Set No. 1 as a test bed to separate out the excessive from the non-excessive noise producing components so that an improvement could be made with Set No. 2.

Audible noise spectrum data was taken with the constant frequency motor and associated accessories operating and then with the turbine and variable frequency circuit running. This data is shown in Figure VI-3, the analysis of which is summarized below:

GEARBOX NOISE

CALCULATING FREQUENCIES:

(1) All fundamental constant speed motor gear mesh frequencies are about 3507.7 Hz, and the sum of gear mesh frequencies are about 7015.4 Hz.

(2) The magnetomotive force wave frequencies from the electric motor are 1556.5 Hz, 1686.5 Hz, and 1826.5 Hz.

(3) Line frequency and its first harmonics are 65 Hz and 130 Hz.

(4) Rotor unbalance frequency is 57.5 Hz.

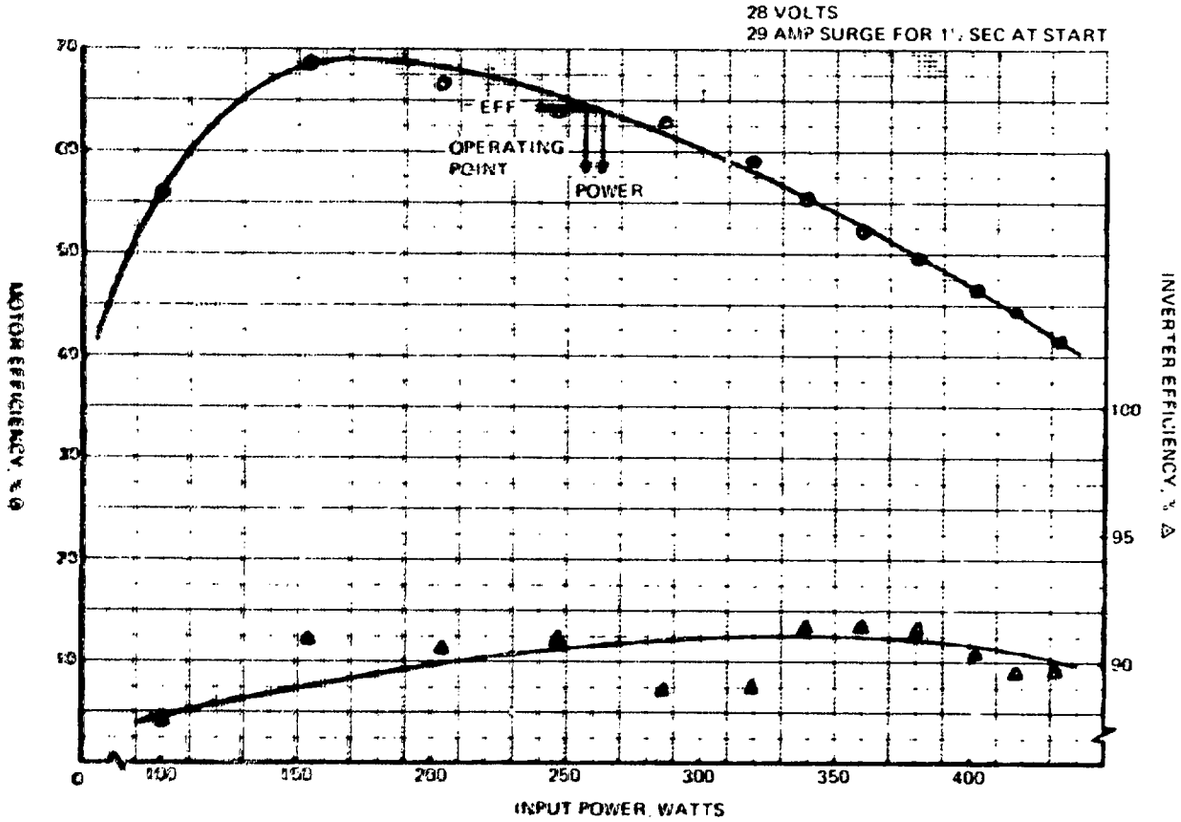

Figure VI-1 3 - Phase Motor

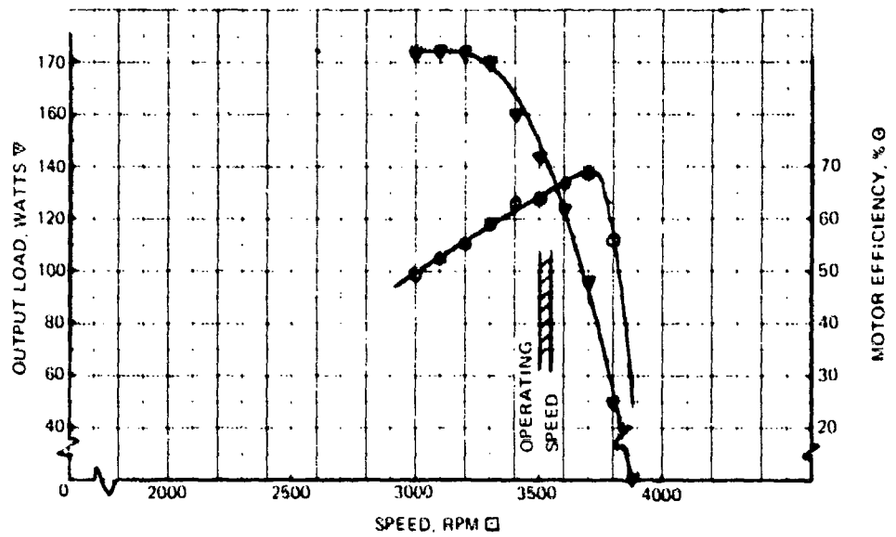

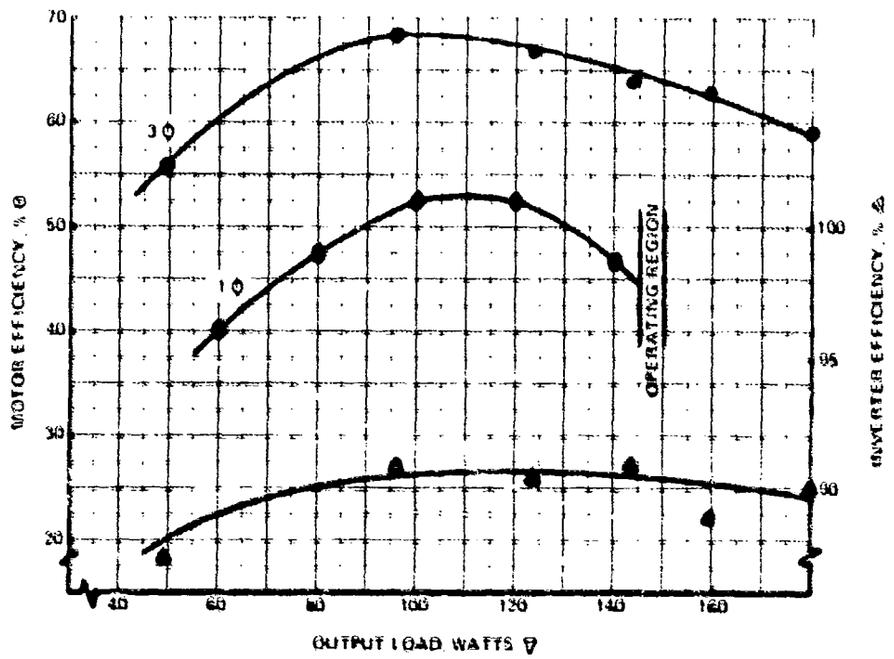

Figure VI-2 3 · Power Motor Performance

AUDIBLE NOISE SPECTRUM ANALYSIS

1.8KW SUNDSTRAND ORGANIC RANKINE CYCLE

Microphone located 18" from center of fuel pump side condenser face.

Chart 1. Constant speed motor & accessories, inverter drive
Chart 2. Constant speed motor & accessories, variac drive
Chart 3. Unit running (variac)
Chart 4. Unit running (variac)
Chart 5. Unit running, expanded analyzer scale (variac)
Chart 6. Unit running, analyzer on 50 Hz bandwidth (variac)

General Radio Spectrum Analyzer, Serial Nos. 376 & 1413.

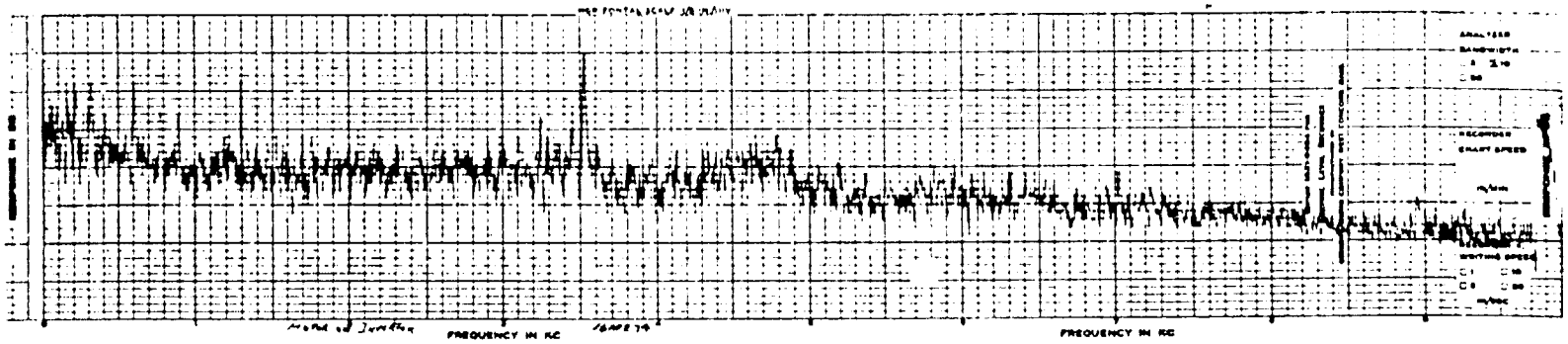

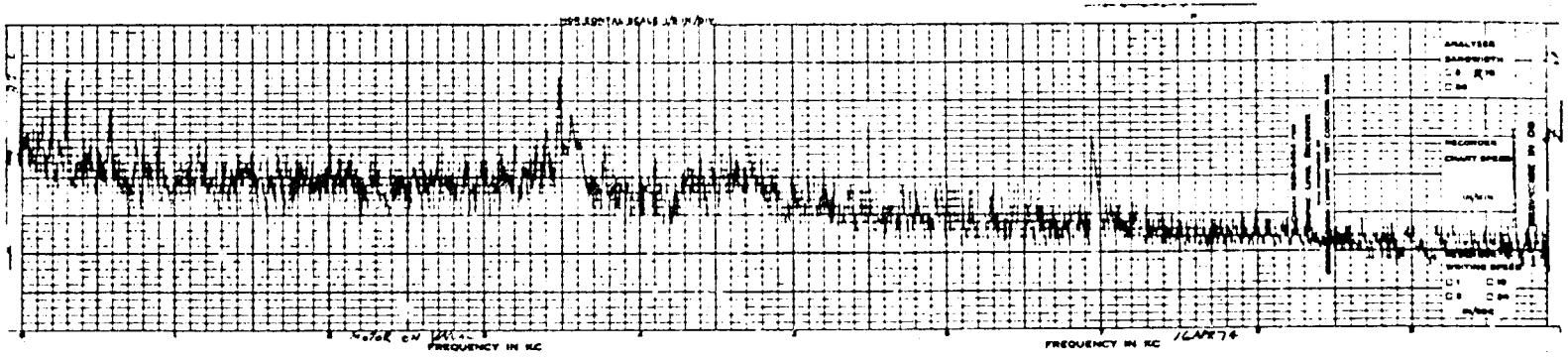

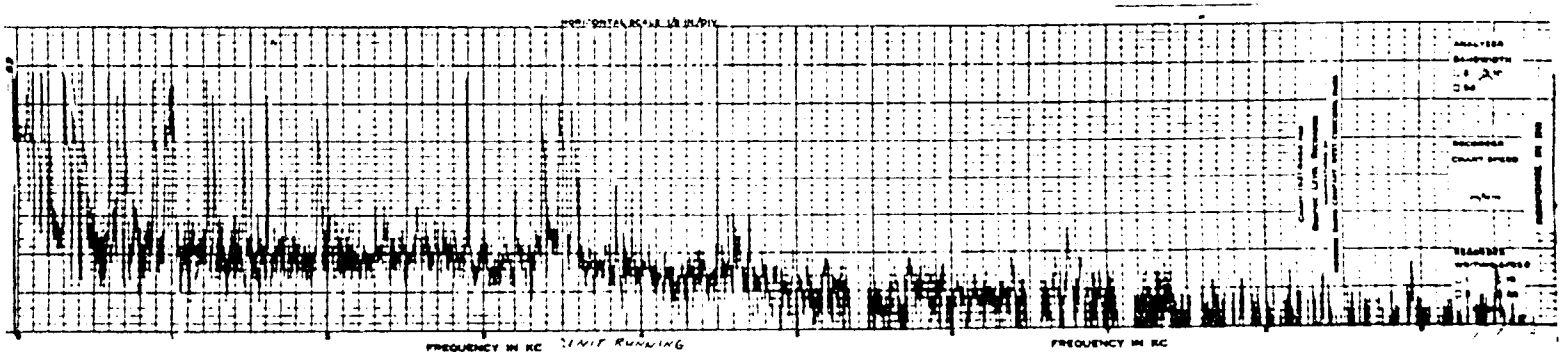

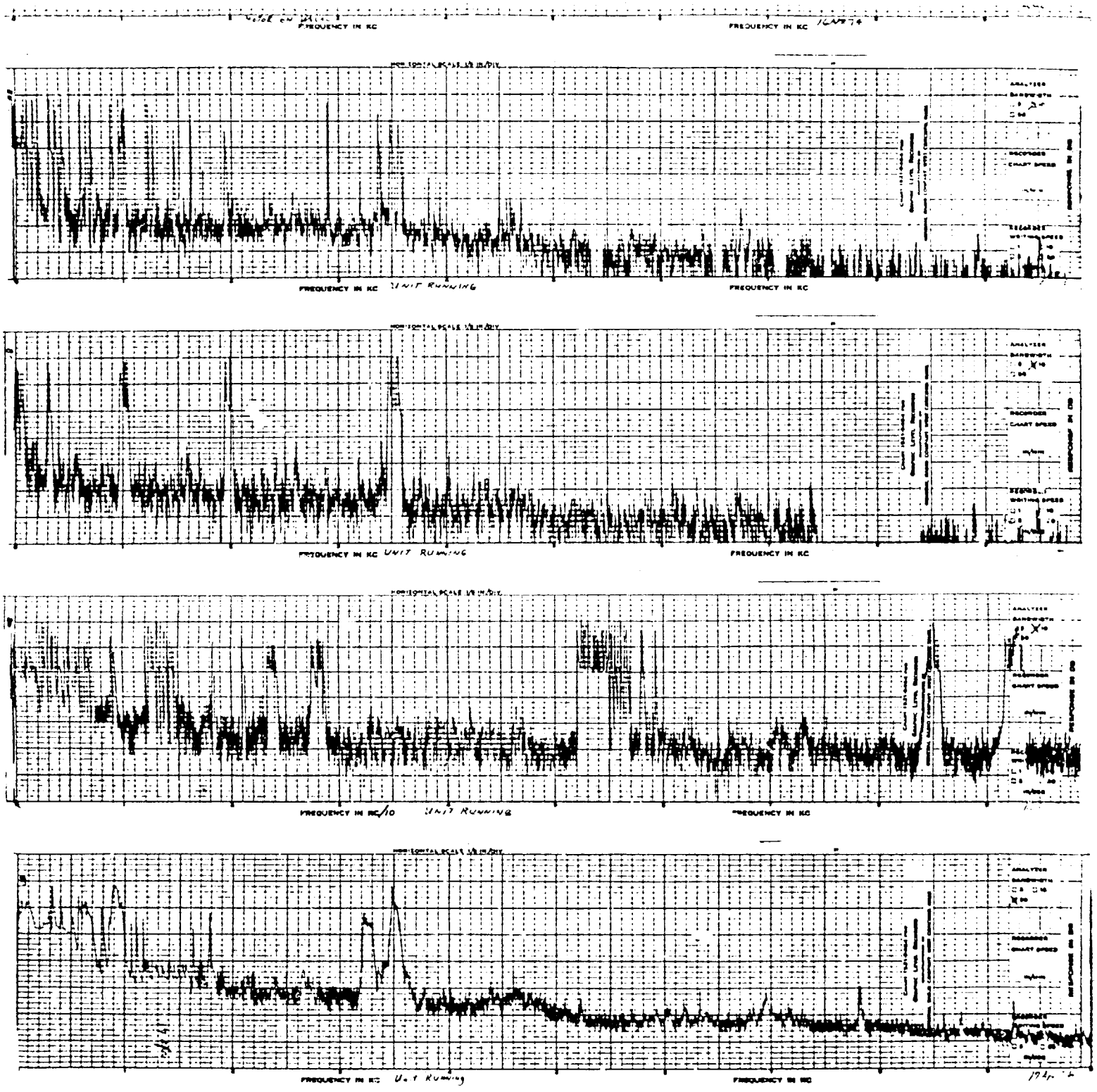

Figure VI-3 Audible Noise Spectrum Analysis

[illegible]

[illegible]

[illegible]

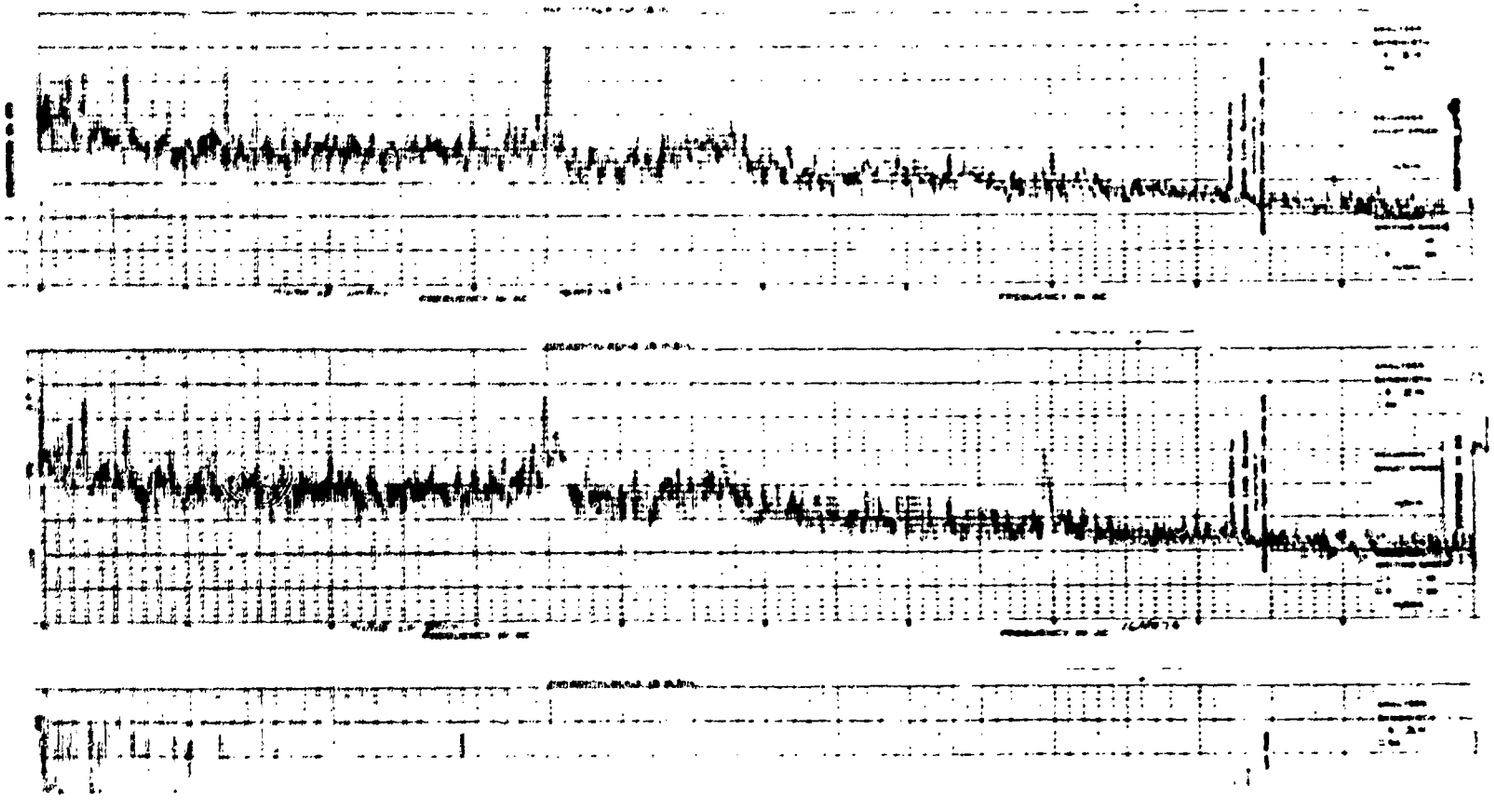

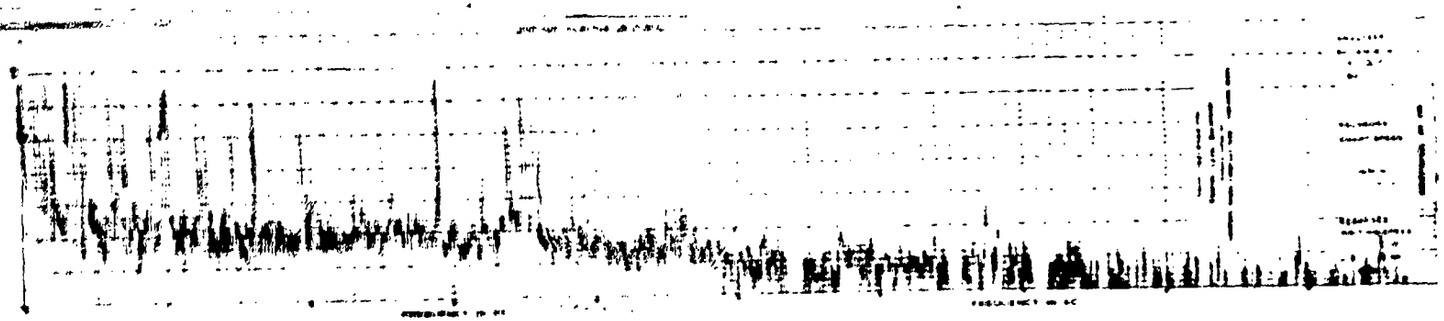

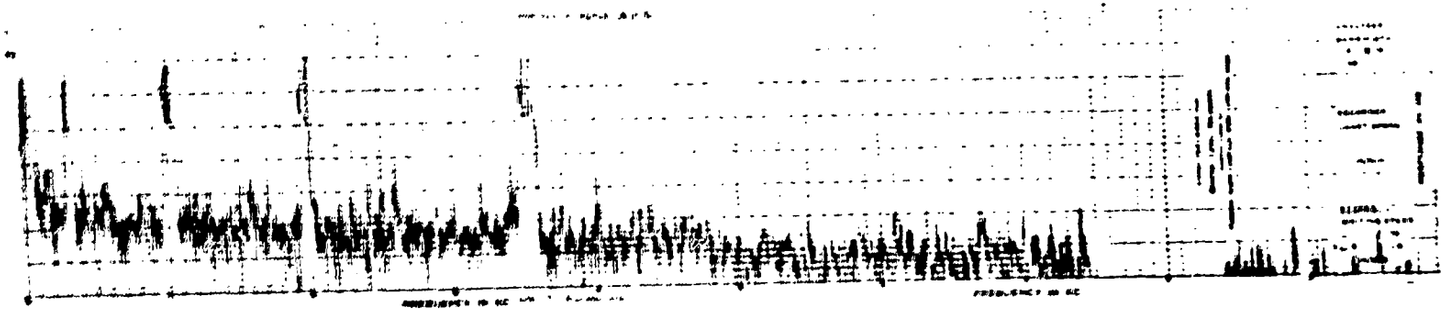

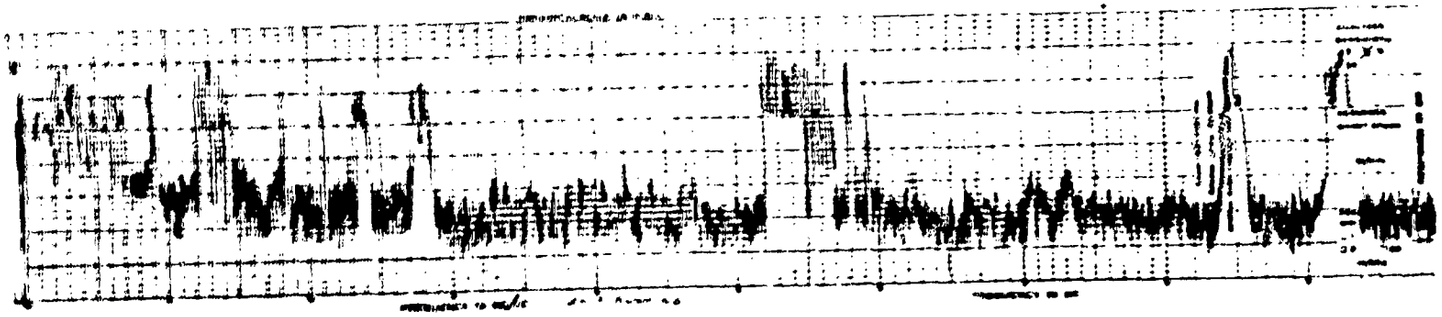

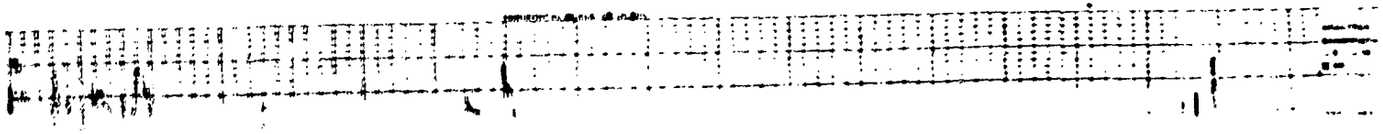

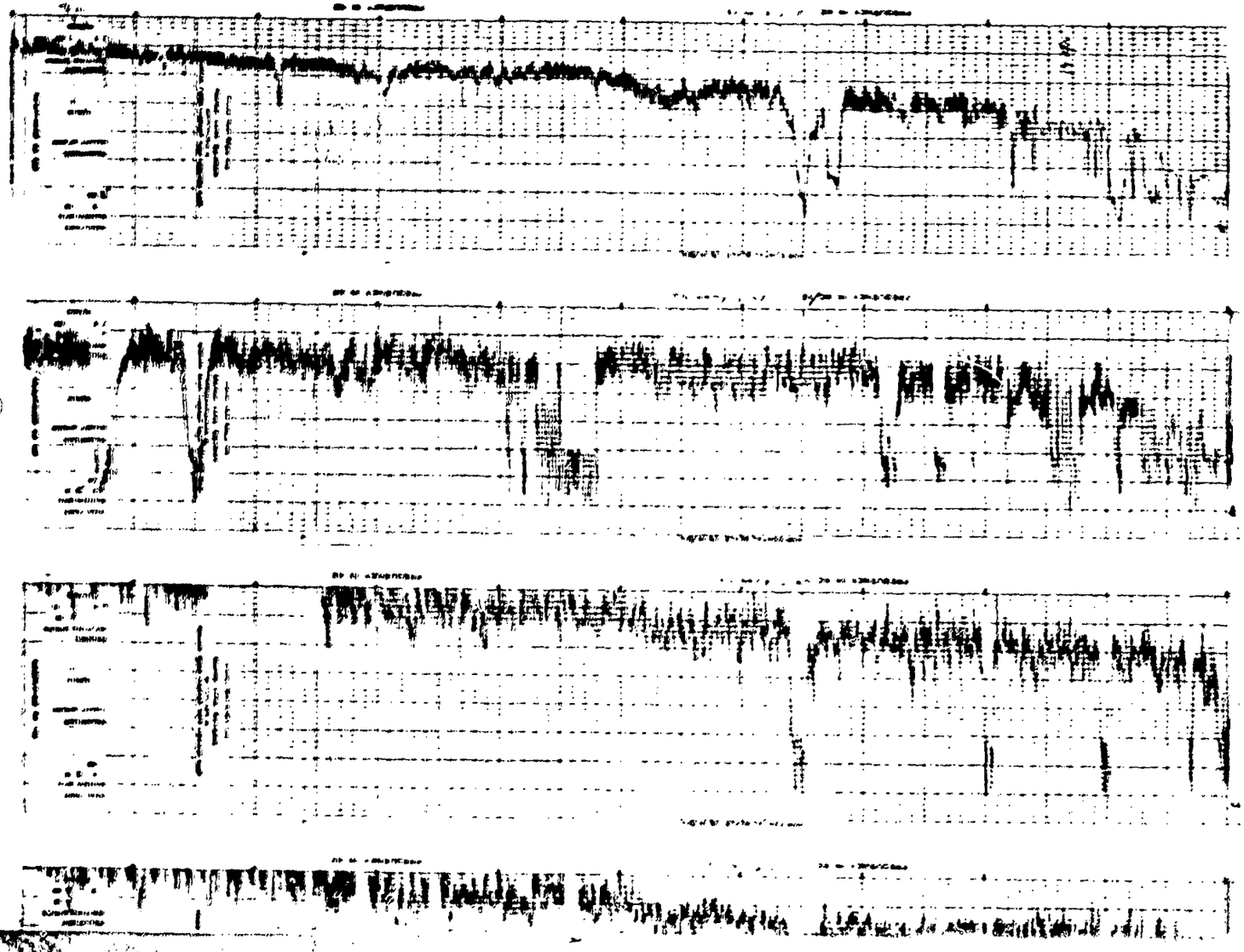

FIVE MOST PROMINENT FREQUENCIES FROM BEARINGS ARE LISTED BELOW:

(5) Irregularity of a rolling element or the case = 23 Hz.

(6) Fundamental rotational frequency of unbalance or eccentricity = 57.5 Hz.

(7) Ball spin frequency = 110.4 Hz; 220.8 Hz.

(8) Rough spot on inner race frequency = 310.5 Hz.

(9) Rough spot on outer race frequency = 207 Hz.

NOISE FREQUENCIES IDENTIFICATION FROM TEST DATA:

Five frequencies with high noise level in two sets of noise spectrum were identified and shown in the following table.

From these data, it is evident that the gear meshes caused the major noise in the motor gear system. A redesign of the gear train should substantially reduce the total gear motor noise.

Inverter Drive	Variac Drive	Cause Associated with Frequencies
3510 (80 d.B.)	3490 (76 d.B.)	(1) Gear Mesh (4 gears at the same frequency).
200 (72 d.B.)	200 (69 d.B.)	(9) Rough Spot on Outer Race
310 (72 d.B.)	300 (76 d.B.)	(8) Rough Spot on Inner Race
600 (72 d.B.)	590 (68 d.B.)	(9) First Harmonics
160 (72 d.B.)	130 (66 d.B.)	(3) (4) (6) (7)

IMPROVEMENTS IN GEAR NOISE REDUCTION:

(1) Helical types have the advantage of maintaining more than two teeth in contact during operation. Because of this, it is possible to get as much as 12 d.B.A. reduction in noise by using them instead of spur gears.

(2) The finest possible pitch should be selected for the given load condition. This increases the amount of tooth overlap; the higher tooth overlap produces a smoother transfer of load, reducing dynamic oscillation of the gear mesh. This also will produce a higher mesh frequency; however, higher frequencies are easier to damp and easier to isolate than low frequencies.

(3) The lowest possible pressure angle also can make gears tend to be quieter, because the transverse overlap ratio is higher.

(4) For only one direction gear drive, recess-action gears can provide a further reduction in noise.

(5) Gear noise at the mesh can be reduced by designing so that the total overlap ratio is an integral number of teeth. (Tests have shown that if the ratio is exactly 2.0, the smoothest transfer of load is obtained.)

(6) Higher AGMA quality level (12 or better) gives smooth operation.

(7) A non-integral gear ratio should be selected to prevent a tooth on the pinion from contracting periodically the same teeth on the mating gear.

Based upon these results, alternative offset (constant frequency) gearbox designs were made. Simultaneously, accelerometers were attached to selected locations on Set No. 1 and tested as follows:

Channel	Location	Test Condition
1	Aft CRU can, longitudinal	Constant f motor running
1	Right front frame, vertical	Constant f motor running
4	Aft CRU can, vertical	Constant f motor running
5	Mount plate, vertical	Constant f motor running
6	Offset gearbox, vertical	Constant f motor running
1	Aft CRU can, longitudinal	Turbine running
5	Mounting plate, vertical	Turbine running
4	Aft CRU can, vertical	Turbine running

Figures VI 4, 5, 6 and 7 are representative plots of this data. Its analysis is summarized below:

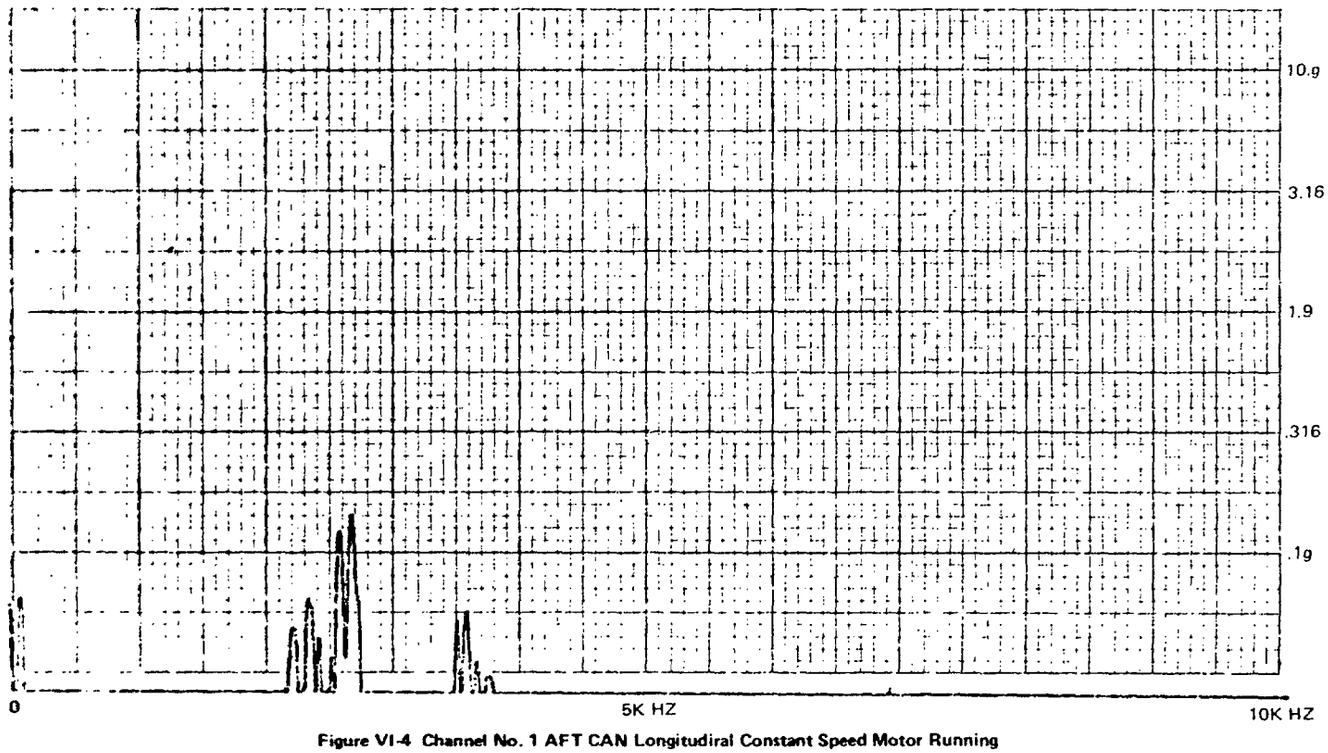

Figure VI-4 Channel No. 1 AFT CAN Longitudiral Constant Speed Motor Running

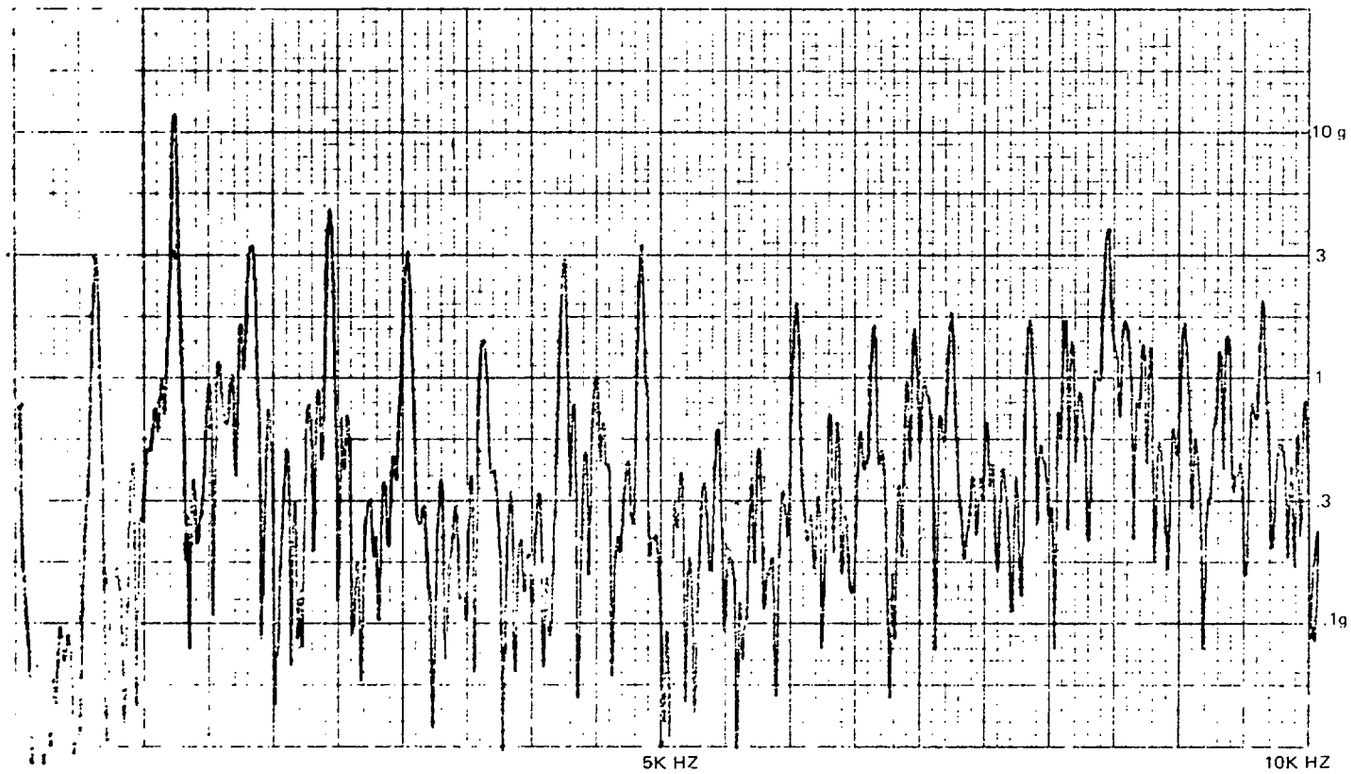

Figure VI-5 Channel No. 1 AFT CAN longitudinal Turbine Running

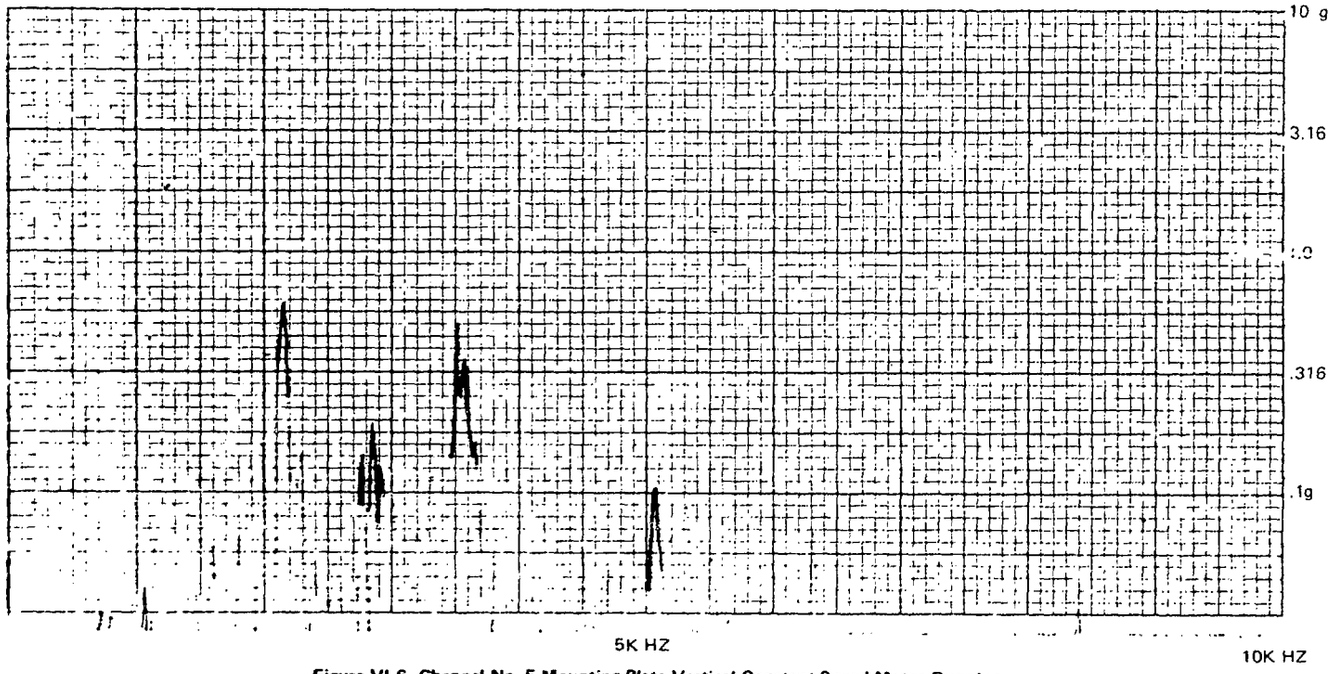

Figure VI-6 Channel No. 5 Mounting Plate Vertical Constant Speed Motor Running

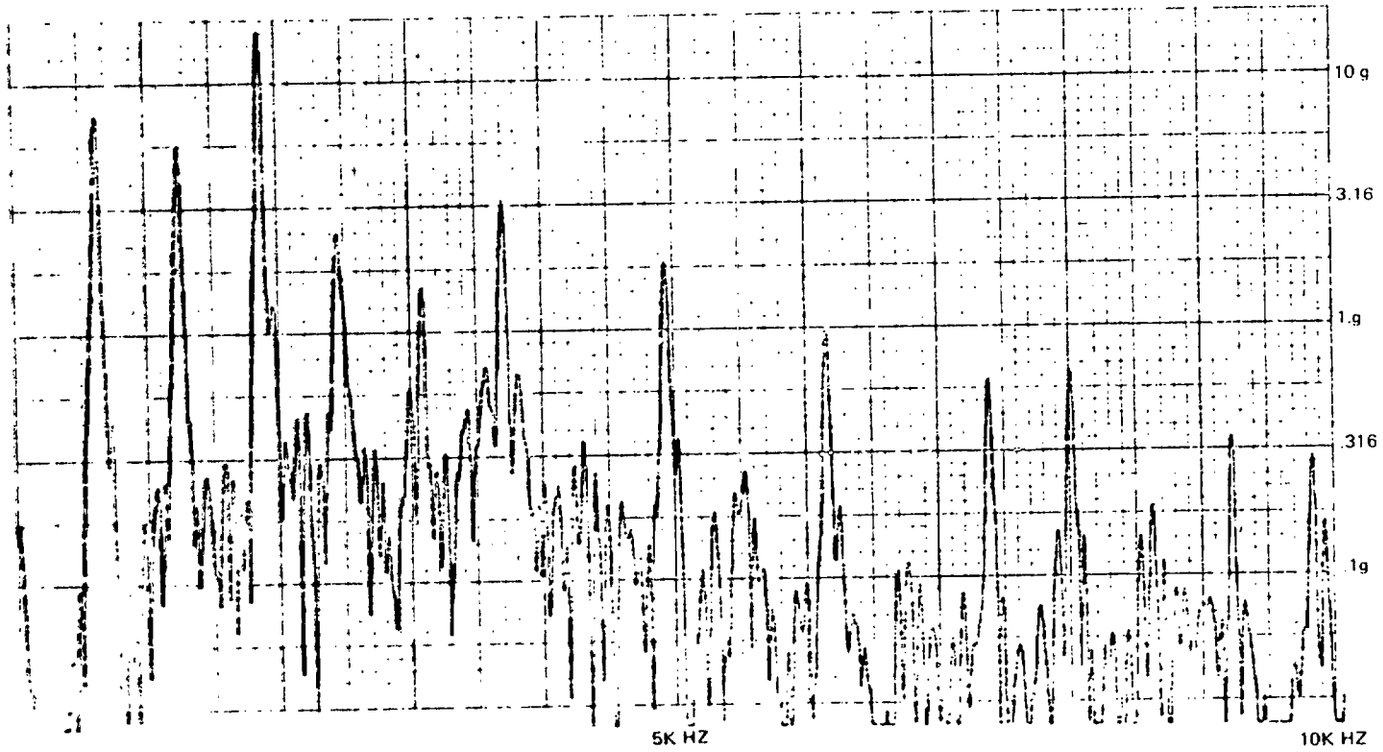

Figure VI-7 Channel No. 5 Mounting Plate Vertical Turbine Running

CPU NOISE

CALCULATING FREQUENCIES:

(1) Rotor unbalance frequency = 625 Hz (37,500 RPM).

(2) Element train passage or cage frequency = 260 Hz.

(3) Ball spin and waviness frequency = 1247 Hz, 2494 Hz, 3741 Hz and 4988 Hz.

(4) Rough spot on inner race frequency = 3287 Hz.

(5) Rough spot on outer race frequency = 2340 Hz.

(6) Variable contact compliance vibration frequency = 2340 Hz, 4680 Hz, and 7020 Hz.

(7) Flexural vibration of the outer ring caused by inner ring waviness of lower order = 1250 Hz, 1875 Hz, 2500 Hz, 3125 Hz, and 3750 Hz.

FREQUENCIES IDENTIFICATION:

Vibration data of Channel No. 5 was used to identify vibratory mechanisms. The following table shows the result.

Frequency (Hz)	"G" Level	Cause Associated with Frequencies
620	7.4	(1)
1250	5.5	(3) (7)
1870	17.0	(7)
2450	2.5	(3) (7)
3100	1.5	(7)
3720	3.1	(3) (7)
4940	1.9	(3) (7)

DISCUSSION:

A) From these data, it is evident that the rotor unbalance, ball waviness, and inner ring waviness of different orders caused the major vibration in this rotor-bearing system.

B) The blade passing frequency is above the data cut-off (>10K Hz).

C) Random type vibration is negligible.

IMPROVEMENTS:

A) Better rotor balance (flexural rotor balance may be needed) gives smooth operation.

B) An increase in the number of balls results in a reduced vibration level generated from ring and balls waviness. For example, the change of nine balls to eleven balls could reduce the correlative vibration level by 10%.

C) Axial load and alignment of the bearing should be carefully designed and checked; the loose balls passing the unload zone or insufficient land height creates additional vibration.

It should be noted that this data was taken with the turbine operating at 37,500 RPM. Based upon these test results, the following changes were implemented to the CRU to reduce imbalance induced vibrations:

Type Nozzle	Forward Can	Aft Can	Bending Criticals
EP2559-1228 Used on Set 1	Stainless Steel .032 thick	Aluminum .032 thick	32 Krpm, pump hsg. 48 Krpm, no pump
EP2559-1228A Used on Set 2	Stainless Steel .075 thick	Stainless Steel .075 thick	65 Krpm, pump hsg. both ends

It should be noted that the noise emitted from Set 1 is significantly greater than the specification. The major contributor is the CRU noise. The changes that were implemented for Set 2 were based upon analysis of the data from Set 1 and were limited to those items that could be readily implemented to qualitatively reduce noise. A significant reduction in the component noise levels have been made. When performance testing Set 2, no measurements of noise level were made. To the naked ear, the noise level of Set 2 has been reduced significantly over that of Set 1. Although improved, the CRU hotwell shell still appears to be acting as an amplifier such that the Set is not sufficiently quiet to meet the specification. The improvements need to be carried further to reduce noise to an acceptable level.

Since the hotwell shell was responding to the rotating assembly imbalance, a significant reduction in the amount of imbalance would also help to reduce noise. Consideration was given to both improved low speed balancing and balancing at speed. For Set 2, the low speed (~2000 rpm) balancing was improved from 0.002 to 0.0002 in-oz imbalance. Though not employed, further improvement would be made by balancing at speed at this sensitivity.

OFFSET GEARBOX

Four gearbox design approaches were considered as presented in Table VI-A. The Berg sprocket belt driven gearbox is shown as an example in Figure VI-8. Each gearbox was installed in Set No. 1 and tested with a microphone located at the center of the condenser louvers 1 foot from the Set on each side. The following data are attached:

Table VI-B Gear and Belt Data

Figure VI-9 Gear and Belt dB-f Plot (worst case)

Table VI-C Belt Data

Figure VI-10 Belt dB-f Plot (worst case)

Table VI-D Berg Data

Figure VI-11 Berg dB-f Plot (worst case)

Table VI-A Gearbox Design Approaches

Type	Gear	No. Teeth	Pitch dia.	Speed (rpm)
Spur (Set 1)	1	61	1.906	3450
	2	42	1.312	5010
	3	46	1.437	4575
	4	75	2.344	2806
Belt Drive	1	18	1.375	3450
	2	12	.764	5117
	4	22	1.401	2820
Berg Drive	1	22	1.162	3450
	2	15	.812	5057
	4	28	1.462	2710
Helical	1	85	1.906	3450
	2	60	1.348	4887
	3	66	1.480	4443
	4	105	2.358	2792

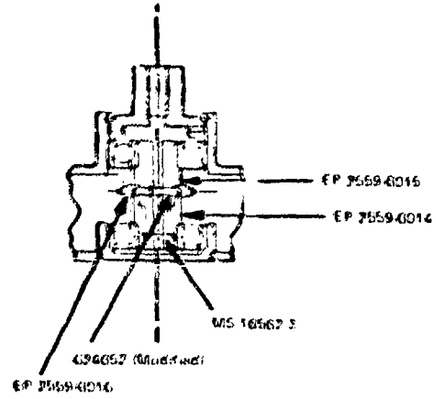

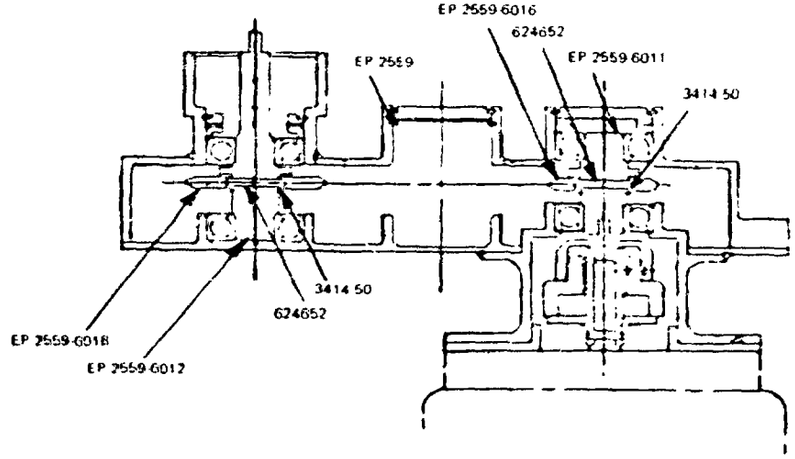

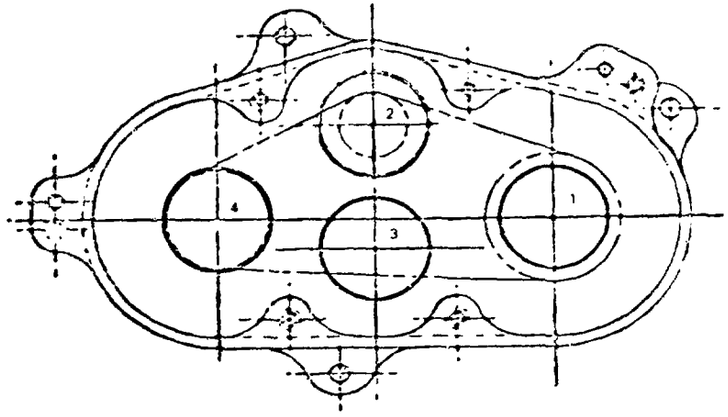

Figure VI-8 Gearbox Assembly, Belt Driven EP 2559-60

Table VI-B Gear and Belt Data

ITEM: 1.5 KW RANKINE CYCLE
MFGR: SUND - STRAND
MODEL NO.
SERIAL NO.
REF:

TEST AND EVALUATION DIVISION
U. S. ARMY MOBILITY EQUIPMENT RESEARCH AND DEVELOPMENT CENTER
FORT BELVOIR, VIRGINIA 22060
AUDIO NOISE TEST
OCTAVE BAND SOUND PRESSURE LEVELS
DB RE 0.0002 MILLIBAR
CONSTANT SPEED ACCESSORY DRIVE

TEST NO.
SHEET OF
DATE 6 & 8 AUG 74
JOB NO. T-74-39
RECORDER J McKLEVIS
OBSERVER W YAWTER
R HELT

DESCRIPTION: TEST SITE: BLDG 323, MICROPHONE LOCATED CENTER OF LOUVERS AT A DISTANCE OF 1 FT FROM PERIMETER

	1	2	3	4	5	6	7	8	9	10	11	12	13	14	15	16	17
				GEAR	DRIVEN	3300	RPM		BELT DRIVEN 3310 RPM								
	CENTER FREQ HZ	BAND FREQ		MICROPHONE POSITIONS RIGHT SIDE	FRONT	LEFT SIDE	FRONT		MICROPHONE POSITIONS RIGHT SIDE	BACK	LEFT SIDE	FRONT	AMB				
				1	2	3	4		1	2	3	4					
	63			65.0	64.0	66.0	65.0		64.0	63.0	63.0	63.0	63.0				
	125			63.0	63.0	64.0	63.0		62.0	63.0	63.0	63.0	63.0				
	250			72.0	80.0	76.0	74.5		75.5	69.0	69.0	71.0	59.5				
	500			64.0	71.0	68.5	67.5		70.0	69.5	67.0	68.0	53.5				
	1000			67.5	69.0	76.5	68.0		65.5	69.0	67.0	65.0	50.0				
	2000			72.0	72.0	71.5	67.0		64.0	65.5	65.0	62.0	47.5				
	4000			82.0	78.0	74.5	71.0		60.5	62.5	62.5	59.5	43.0				
	8000			63.5	65.0	65.0	61.0		53.0	54.0	55.0	52.0	37.0				
	A-P			82.0	83.0	80.0	78.0		76.5	76.0	76.0	75.0	70.0				
	DB-A			83.0	81.5	78.5	75.0		72.0	72.5	72.0	70.5	56.0				

REMARKS:

SMEFB Form 28
28 Jun 72

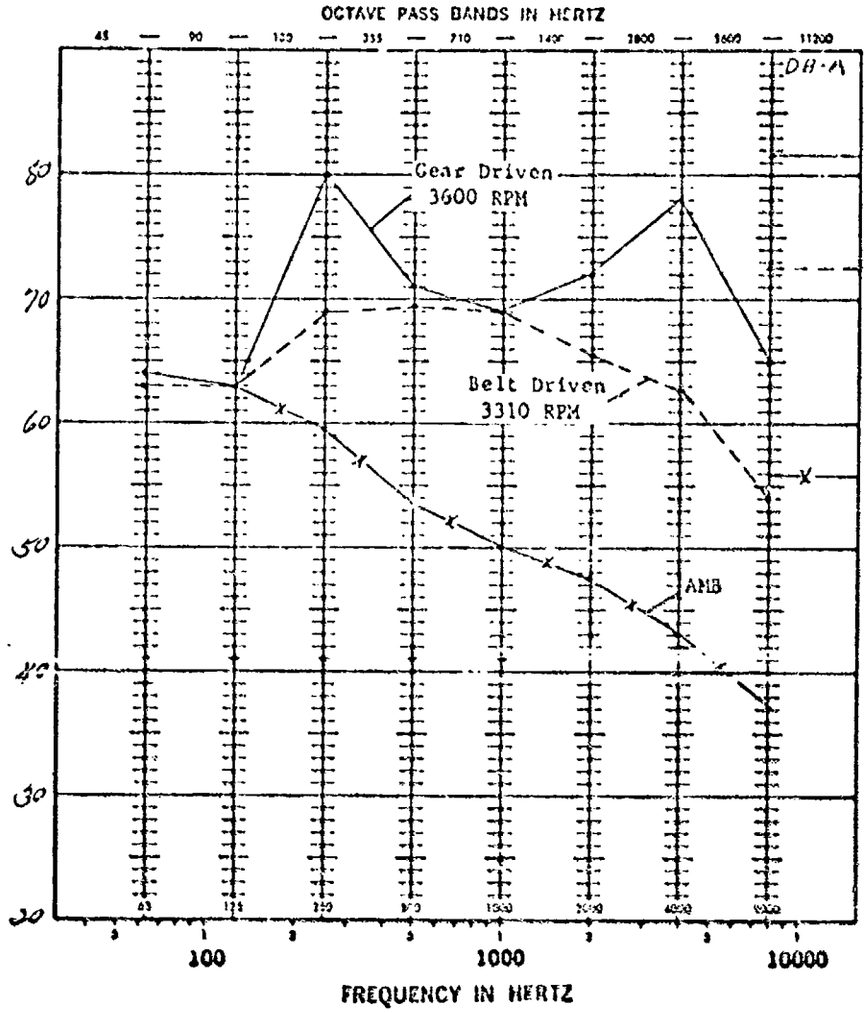

Position #2
Back

1.5 KW Rankine
Mfgr. Sundstrand
Test Conducted:
6 & 8 Aug 74

Figure VI-8 Gear and Belt db-f Plot (Worst Case)

Table VI-C Belt Data

ITEM: 1.5 Km Range of Mined Belt Driver Gear Box
MFGR: Sundstrand
MODEL NO.:
SERIAL NO.:
REF:

TEST AND EVALUATION DIVISION
U. S. ARMY MOBILITY EQUIPMENT RESEARCH AND DEVELOPMENT CENTER
FORT BELVOIR, VIRGINIA 22060
Audio Noise Test
Octave Band Sound Pressure Levels
Db Re 0.0002 Microbar

TEST NO.:
SHEET ___ OF ___
DATE: 14 Aug 74
JOB NO.: T-74-39
RECORDER: J McKlevis
OBSERVER: W Walter

TEST SITE: Jar Area Bldg 323 Microphone located centered levers at 1 foot from perimeter

500 RPM w/out Fan

Octave Band Center Freq. Hz	Microphone Positions Right Side	Right Back	Left Side	Left Front	Avg	Microphone Positions Right Side	Right Back	Left Side	Left Front	Avg
	1	2	3	4		1	2	3	4	
63	66.0	66.0	69.0	69.0	67.0	64.0	66.0	68.0	63.0	66.0
125	63.0	63.0	63.0	62.0	64.0	63.0	61.0	64.5	63.0	62.0
250	59.0	74.0	70.0	75.0	74.0	61.0	61.0	64.5	62.0	60.0
500	57.0	72.0	72.0	70.0	68.0	63.5	64.5	64.0	63.0	58.0
1000	57.0	68.0	70.5	69.5	67.0	66.0	68.5	65.0	63.0	57.0
2000	48.0	68.0	67.0	67.0	64.0	59.0	59.0	57.0	50.0	47.0
4000	51.0	64.0	65.0	66.0	62.5	56.0	56.0	55.5	50.5	43.0
Bard	39.0	54.5	52.5	58.0	50.0	51.0	51.5	51.5	50.5	38.0
A-P		80.0	76.0	80.5	71.5	77.0	73.5	74.0	75.5	72.0	71.0
DB-A		56.5	72.0	76.0	74.5	72.5	65.0	70.0	68.5	66.5	56.5

REMARKS:

DTEPE Form 28
16 Jun 72

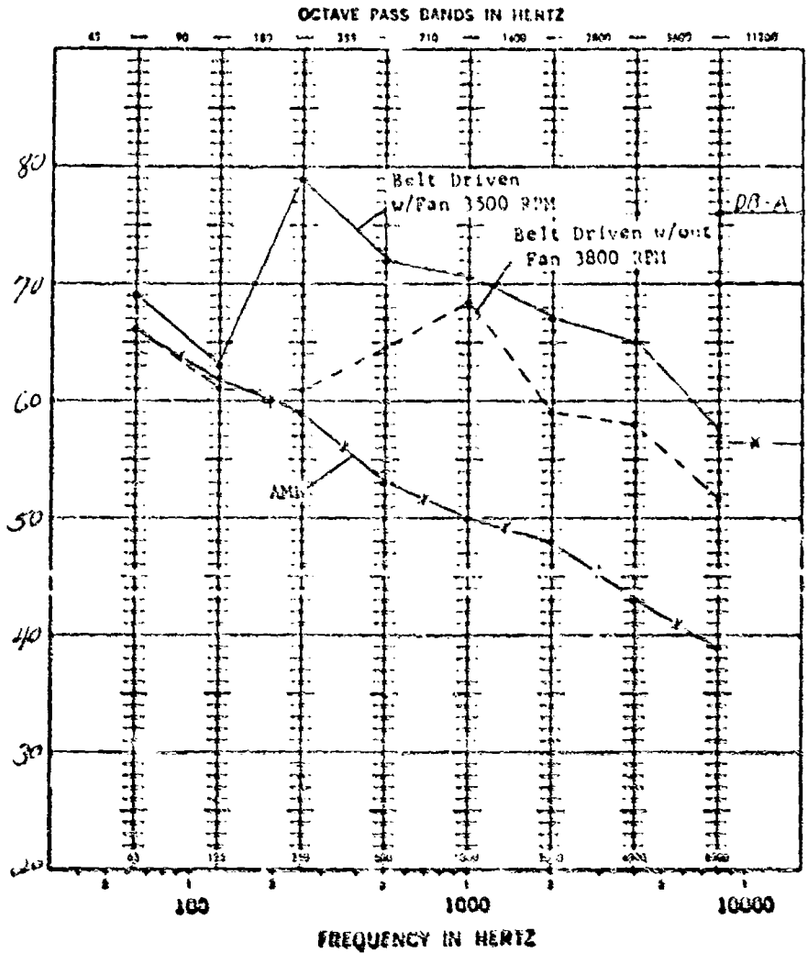

Position #2
Back

1.5 KW Rankine
Mfgr. Sundstrand
Test Conducted 14 Aug 74

Figure VI-10 Belt Shaft Plus (Worst Case)

Table VI-D Test Data

ITEM: J. Ray Ramsey U.S. L-11 (6x6) 1 Drive (Unknown)

MFGR.

MODEL NO.

SERIAL NO.

REF.

TEST AND EVALUATION DIVISION

U. S. ARMY MOBILITY EQUIPMENT RESEARCH AND DEVELOPMENT CENTER
FORT BELVOIR, VIRGINIA 22060

AUDIO NOISE TEST

OCTAVE BAND SOUND PRESSURE LEVELS.

DB RE 0.0002 MICROBAR

TEST NO.

SHEET ____ OF ____

DATE 21 OCT 74

JOB NO. T-74-39

RECORDER J. M. Ivells

OBSERVER W. Walker

CASE

CLEAR NO.

TEST SITE: LAB AREA BLDG. 323 MICROPHONE LOCATED CLOSED OF ENGINE LEFT FROM DRIVER

COL.	1	2	3	4	5	6	7	8	9	10	11	12	13	14	15	16	17
	OCTAVE BAND CENTER FREQ. Hz			RIGHT SIDE	REAR	LEFT SIDE	FRONT PANEL										
				1	2	3	4										
	63			61.5	59.0	57.0	68.5										
	125			60.5	60.5	60.0	58.6										
	250			72.0	74.5	72.0	76.0										
	500			70.5	71.0	71.0	70.0										
	1000			69.5	70.0	69.0	66.0										
	2000			67.0	68.0	66.5	64.0										
	4000			64.5	66.5	65.0	61.5										
	8000			58.5	60.5	58.6	55.0										
	A-O			77.0	78.0	76.5	78.0										
	DB-A			74.0	75.5	74.0	73.0										

REMARKS

SAEFB Form 28
28 Jun 72

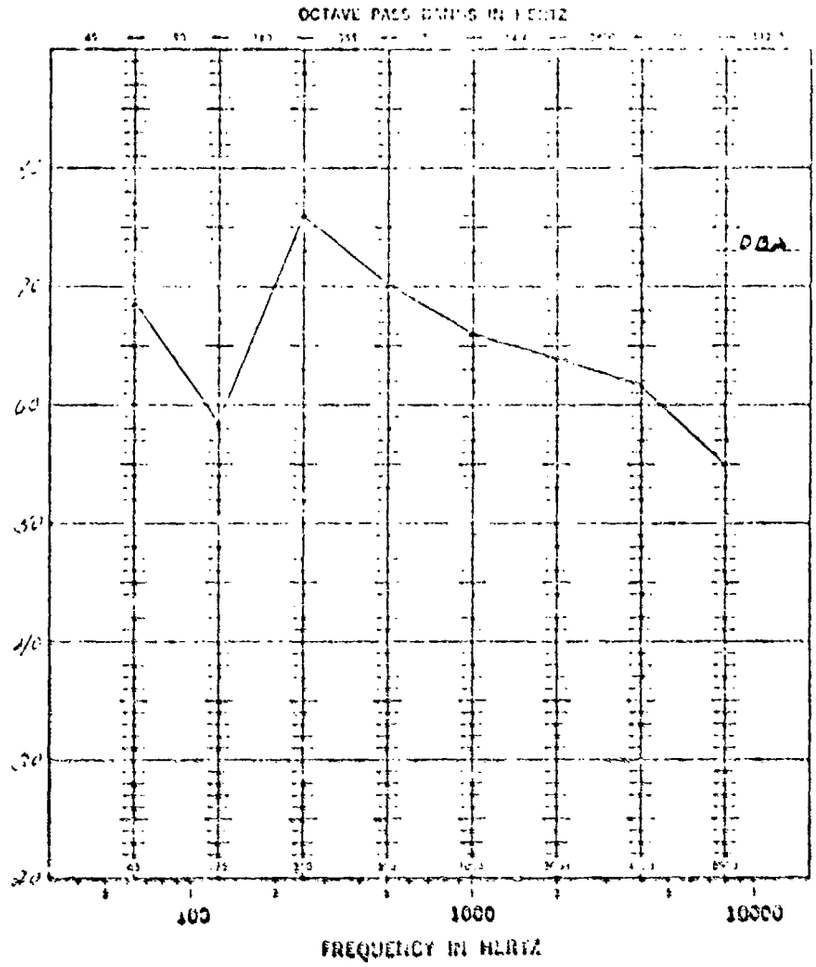

Position # 4

Control Panel
1.5 KW Engine
w/Belt Drive
By Sound...rand
Test Conducted
21 Oct 74

Figure VI-11 Sang dB-f Plot (Worst Case)

Table VI-E Helical Data

Figure VI-12 Helical db-f Plot (worst case)

From these tables and figures, Table VI-F (summary of the peak db for each location and ranked from (1) the quietest to (4) the noisiest), and Table VI-G (summary of the selection tradeoff), the selection of the Berg version was made. This gearbox is shown in Figure VI-13.

While limited noise data was taken on the variable speed gearbox, the levels were considerably lower than for any of the above. It is also buried in the lower compartment of the Set and no improvement in noise was attempted although, based upon the desirable results of the constant frequency offset gearbox, significant improvement could be made.

CRU (COMBINED ROTATING UNIT)

The redesigned CRU is shown in Figure VI-14. Because the turbine balance assembly is installed in the hotwell which is made of thin gauge material for minimal weight, it is capable of acute vibration. Simultaneous with the relocation of the pitot pump from the forward to aft end of the assembly, the turbine wheel overhang was reduced.

Critical speeds were determined by an analysis which includes the gyroscopic effects and the spring mounts (bearings) for any spin to whirl ratio. Also a normalized mode shape of the shaft deflection is given for each critical speed.

Utilizing a spin to whirl ratio of 1.0 (synchronous whirl) and bearing stiffnesses of 250,000 lb/in for each bearing, the first three critical speeds were calculated for seven configurations. Table VI-H shows critical speeds and mode shapes for each configuration.

In order to push the critical speeds out of the operating range either increasing the shaft thickness (new bearings) or decreasing the length of the overhang could be incorporated. If 0.2 inch is removed from the turbine overhang end and 0.25 inch removed from the pump overhang end, the critical speed is pushed up to 58,000 rpm (Configuration 6). With a titanium pump housing the critical speed is 63,000 rpm (Configuration 7).

Configuration 7 was selected with a slightly smaller pump overhang so that the bending critical speeds at both turbine and pump end are 65,000 rpm. This is 18% above the 55,000 rpm operating speed and is considered sufficient, though in the long run slightly more margin is desirable. The turboalternator is shown in Figure VI-15.

After this redesigned CRU was fabricated, a series of development tests were conducted using gaseous dry nitrogen as the test gas. With the redesigned nozzle plate (EP2559-1228A) in the as-received condition, stall torques were measured and compared to the original (Set No. 1) nozzle plate and the test plate (flat plate) used as a basis for establishing the nozzle spacing. This data is shown in Tables VI-I and VI-J which revealed poor performance. Consideration was given to possible manufacturing error so the drawing and hardware were examined for possible discrepancies, e.g., nozzle overlap, nozzle-blade gas impingement, nozzle profile, and blade-diffuser impingement. Multi-size layouts and shadowgraph tracings of the hardware were made which indicated that the new nozzle plate is dimensionally as accurate as the previous ones. One possible improvement would have been slightly greater nozzle-to-blade height lap ratio. A series of spin, flow, and acceleration tests were made; data shown in Table VI-K. The conclusion from this testing is that the as-received

Table VI-E Helical Data

ITEM: 1.5 KW RANKINE W/ HELICA GEAR BOX
MFGR. SUNDSTRAND
MODEL NO.
SERIAL NO.
REF:

TEST AND EVALUATION DIVISION
U. S. ARMY MOBILITY EQUIPMENT RESEARCH AND DEVELOPMENT CENTER
FORT BELVOIR, VIRGINIA 22060
AUDIO NOISE TEST
OCTAVE BAND SOUND PRESSURE LEVELS
DB RE 0.0002 MICROBAR

TEST NO.
SHEET ___ OF ___
DATE 17 OCT 74
JOB NO. T-74-39
RECORDER J. M. KLEKIS
OBSERVER R. LIGHT

INST. →
READ NO. ↓
TEST SITE: LAB AREA BLDG 323, MICROPHONE LOCATED CENTER OF LOUVERS, 1 FOOT FROM PERIPHERY
UNITS
STM.

COL.	1	2	3	4	5	6	7	8	9	10	11	12	13	14	15	16	17
	OCTAVE BAND CENTER HZ	FREQ	RIGHT SIDE 1	REAR 2	LEFT SIDE 3	CONTROL PANEL 4											
	63		61.0	61.5	58.0	69.5											
	125		60.0	61.5	61.5	59.5											
	250		72.0	78.0	72.5	81.5											
	500		71.0	72.0	72.0	72.0											
	1000		70.5	72.0	70.0	69.0											
	2000		70.5	71.0	69.0	66.0											
	4000		67.5	69.0	67.0	64.0											
	8000		61.0	63.0	61.0	58.0											
	A-P		78.0	81.0	78.0	82.0											
	DB-A		76.0	78.0	75.5	76.5											

NOTES:

SMEFB Form 28
28 Jun 72

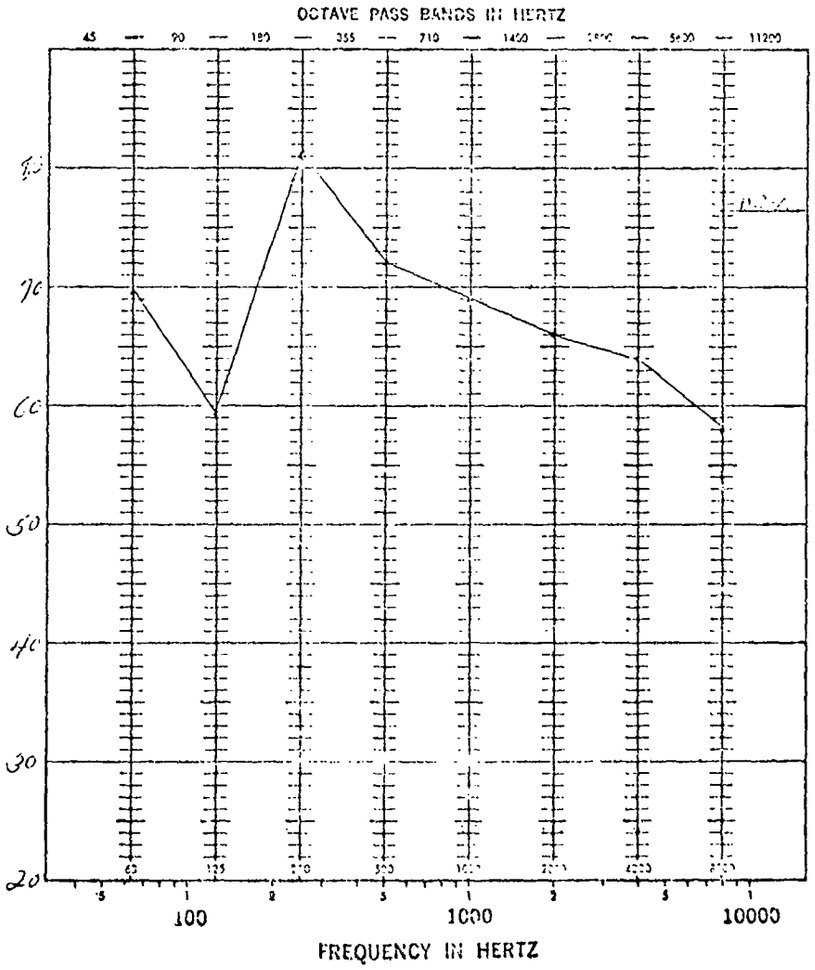

Position # 4

Control Panel
1.5 KW Rankine
w/Helical Gears
Mfgr. Sundstrand
Test Conducted
17 Oct 74

Figure VI-12 Helical db-f Plot (Worst Case)

Table VI-F Data Summary

Octave Center Hz		Right Side	Rear	Left Side	Control Panel	Avg.	Rank
63	Belt Drive	66.0	69.0	69.0	67.0	67.75	4
	Berg Drive	61.5	59.0	57.0	68.5	61.50	1
	Helical Gear	61.0	61.5	58.0	69.5	62.50	2
	Spur Gear	65.0	64.0	66.0	65.0	65.0	3
125	Belt Drive	63.0	63.0	63.0	64.0	63.25	3
	Berg Drive	60.5	60.5	60.0	58.5	59.875	1
	Helical Gear	60.0	61.5	61.5	59.5	60.625	2
	Spur Gear	63.0	63.0	64.0	63.0	63.25	3
250	Belt Drive	71.0	79.0	73.0	74.0	74.25	3
	Berg Drive	72.0	74.5	72.0	76.0	73.625	1
	Helical Gear	72.0	78.0	72.5	81.5	76.0	4
	Spur Gear	72.0	80.0	70.0	74.5	74.125	2
500	Belt Drive	70.0	72.0	70.0	68.0	70.0	2
	Berg Drive	70.5	71.0	71.0	70.0	70.625	3
	Helical Gear	71.0	72.0	72.0	72.0	71.75	4
	Spur Gear	69.0	71.0	68.5	67.5	69.0	1
1000	Belt Drive	68.0	70.5	69.5	67.0	68.75	2
	Berg Drive	69.5	70.0	69.0	66.0	68.625	1
	Helical Gear	70.5	72.0	70.0	69.0	70.375	3
	Spur Gear	67.5	69.0	70.5	68.0	68.75	2
2000	Belt Drive	64.0	67.0	67.0	64.0	65.5	1
	Berg Drive	67.0	68.0	66.5	64.0	66.375	2
	Helical Gear	70.5	71.0	69.0	66.0	69.125	3
	Spur Gear	72.0	72.0	71.5	67.0	70.625	4
4000	Belt Drive	62.0	65.0	66.0	62.5	63.875	1
	Berg Drive	64.5	66.5	65.0	61.5	64.375	2
	Helical Gear	67.5	69.0	67.0	64.0	66.875	3
	Spur Gear	82.0	78.0	74.5	71.0	76.375	4
8000	Belt Drive	54.5	57.5	58.0	55.0	56.25	1
	Berg Drive	58.5	60.5	58.5	55.0	58.2	2
	Helical Gear	61.0	63.0	61.0	58.0	60.75	3
	Spur Gear	63.5	65.0	65.0	61.0	63.625	4
A-P	Belt Drive	76.0	80.5	78.5	77.0	78.0	2
	Berg Drive	77.0	78.0	76.5	78.0	77.375	1
	Helical Gear	78.0	81.0	78.0	82.0	79.75	3
	Spur Gear	83.0	83.0	80.0	78.0	81.0	4
DB-A	Belt Drive	72.0	76.0	74.5	72.5	73.75	1
	Berg Drive	74.0	75.5	74.0	73.0	74.125	2
	Helical Gear	76.0	78.0	75.5	76.5	76.5	3
	Spur Gear	83.0	81.5	78.5	75.0	79.5	4

Table VI-G Selection Tradeoff

63-8000 Hz	Belt	Berg	Helical	Spur
Times 1st	11	14	2	8
Times 2nd	11	12	10	2
Times 3rd	5	6	12	9
Times 4th	5	0	8	13
	32	32	32	32
A-P				
Times 1st	2	2	0	0
Times 2nd	1	2	1	1
Times 3rd	1	0	3	0
Times 4th	0	0	0	3
	4	4	4	4
DB-A				
Times 1st	2	2	0	0
Times 2nd	2	2	0	0
Times 3rd	0	0	3	1
Times 4th	0	0	1	3
	4	4	4	4
Pwr. Consumption (watts) (Taken on #1 Unit)	280	262½	246	252-270
Selection				
Based on lowest noise		X		
Based on lowest power			X	

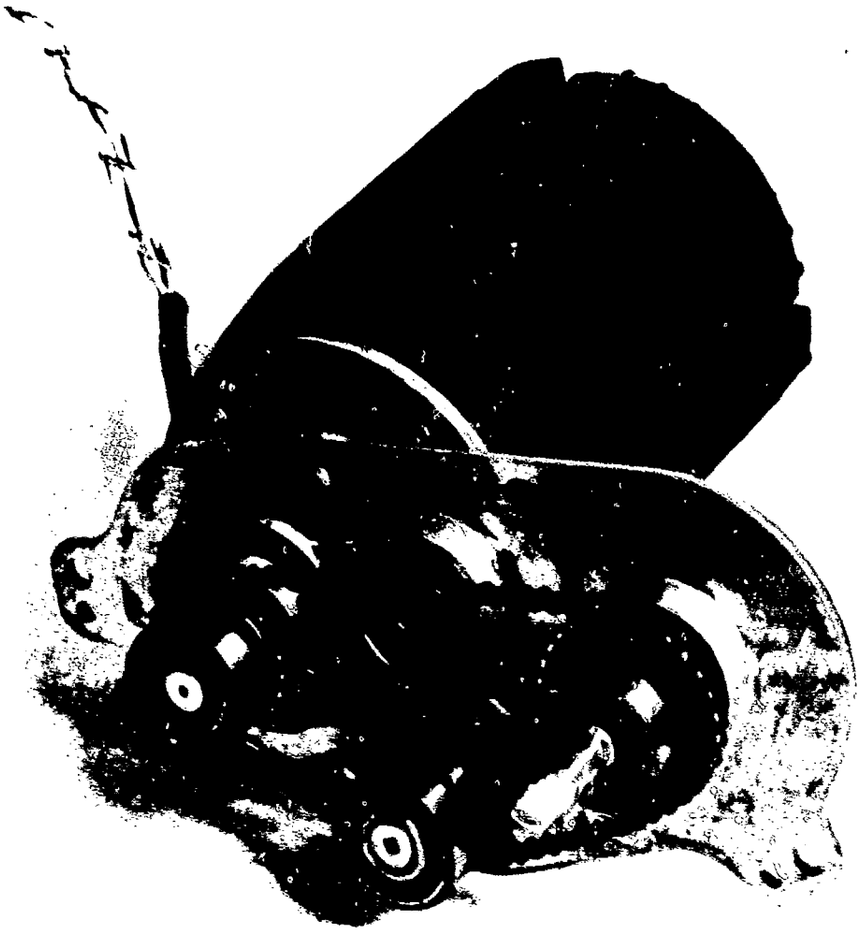

Figure VI-13 Constant Frequency Motor and Offset Gearbox

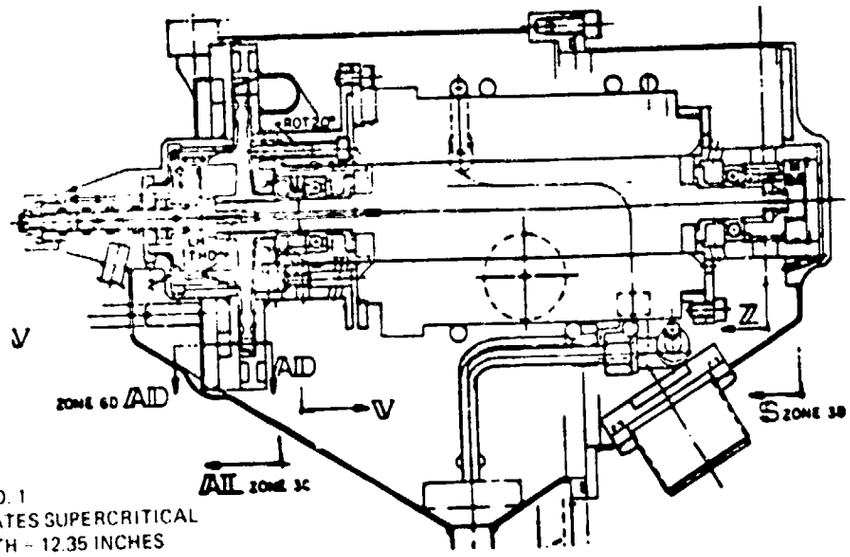

SET NO. 1
OPERATES SUPERCRITICAL
LENGTH - 12.35 INCHES
REF: EP 2559-1001

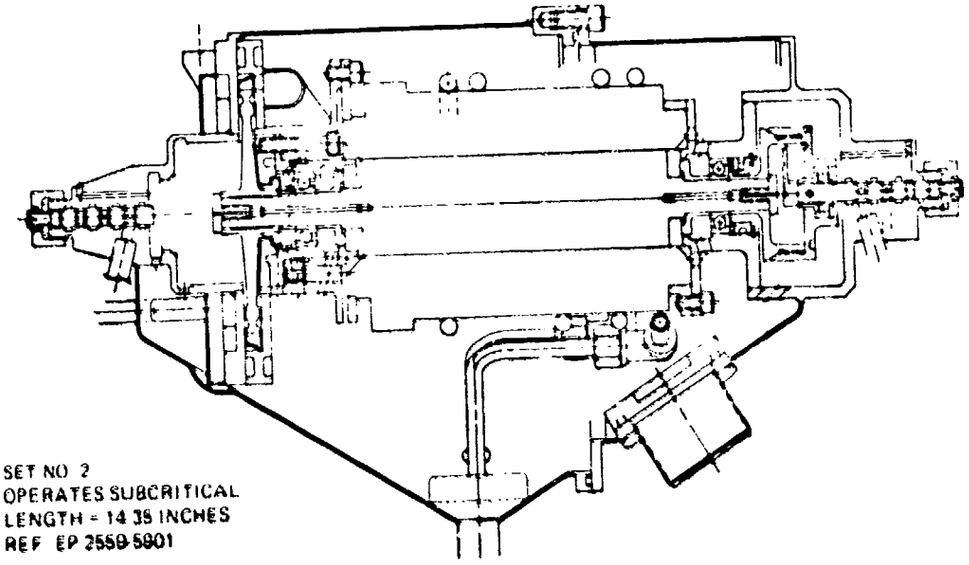

SET NO 2
OPERATES SUBCRITICAL
LENGTH = 14 35 INCHES
REF EP 2559-5901

Figure VI-14 Set No. 1 and No. 2 CRU Configurations

Table VI-H Turboalternator Pump Rotating Shaft Critical Speed Configuration Analysis

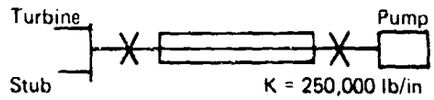

$\frac{\text{spin}}{\text{whirl}} = 1.0$

Configuration	Critical Speeds 1st	2nd	3rd
1. Original shaft	29,500 RPM	71,000 RPM	169,000 RPM[3]
2. Aft Pitot Pump hsg. with stub on wheel (steel hsg.)	47,500	49,500	75,000
3. Aft pitot pump hsg. with stub on wheel (titanium hsg.)	49,000	53,500	74,500
4. Aft pitot pump hsg. no stub (steel hsg.)	48,000	57,500	77,000
5. Aft pitot pump hsg. no stub (titanium hsg.)	53,000	58,000	76,000
6. Modified – .2" at turbine overhang -.25" at pump overhang (steel hsg.)	58,000	63,000	89,000
7. Modified same as 6, only (titanium hsg.)	63,000	65,000	87,500

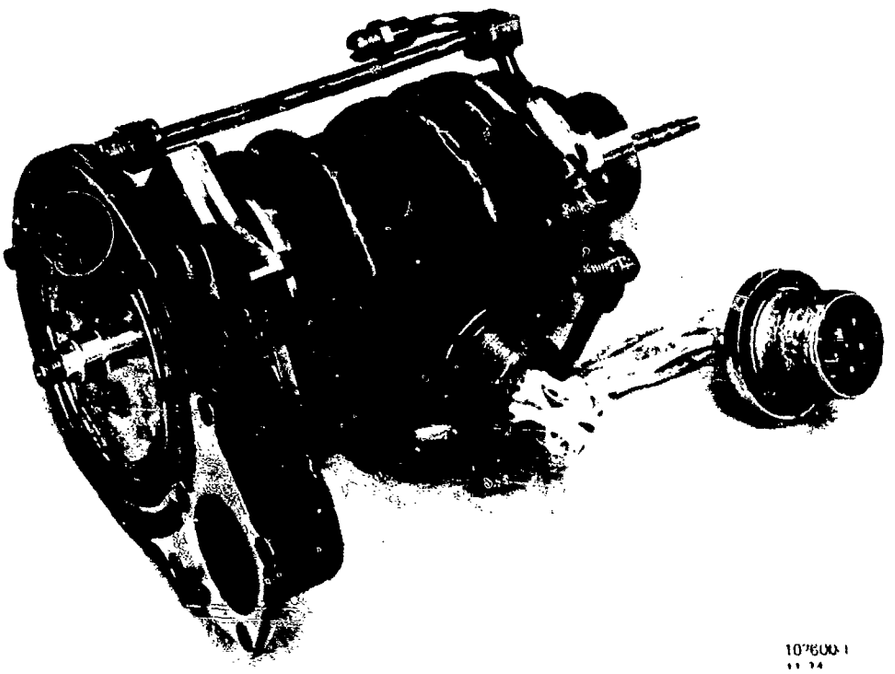

Figure VI-15 Turbo Alternator Pump Assembly

Table VI-I Summary of Stall Torque & Spinup Data

Nozzle Plate	No. Noz.	PNI (PSIG)	Tq (in lb)	w (lb/sec)	Ax. Cl.	PNI @ 55K	Comments
Original	9	1350	12	.094	.034		
(Wide Spaced)		1250	10.5	.033	.034		
EP 2559 1228		850	7	.061	.034		
		1250	13	.069	.020	660	Flows may be
		830	8	.045	.020	@ 52000	questionable?
		1350	13	.093	.010		
		1250	12	.088	.010		
		850	8	.061	.010		
	4	1310	7	.035	.020		
		1250	6.5	.034	.020		
		850	4	.024	.020		
Flat Plate	10	1250	16.5	.110	.020	400 @ 57000	
(Close Spaced)		800	10.1	.068	.020		
EP 2559 1270	7	1200	11.3	.074	.020	480 @ 56,500	
		850	7.5	.049	.020		
	5	1215	8.2	.052	.020	580 @ 56,000	
		850	5.5	.036	.020		
Latest (A)	10	1350	11.5	.094	.020	750 @ 60,000	(Run 203) with
(Close Speed)		1200	9.5	.082	.020		204 PP Hsg
EP2559 1228A		850	6	.058	.020		
003 CRU	7	1350	7	.063	.020	800 @ 54,000	(205)
002 Exh. Hsg		1200	6	.056	.020		
5 17 74		850	4	.040	.020		

Table VI-J Nondimensionless* Stall Torque Data Using GN_2 (Des. PR = 529 @ AR = 25)

Noz Plate	No. Noz	Meas. A.R	Pin (PSIA)	P.R.	τ calc.	τ meas.	%	Calc m τ meas.	%	C_q
New										
EP2559 1228A	10	26.6	1365	84	.6582	.5196	78	5045	77	
			1395	84.5	.6585	5382	81	5801	90	.91 .93
			1265	115	.6690	5727	85	5668	84	
	7	25.4	1365	88	.6677	.4616	70	4199	64	.86
	5	26.1	1370	90	.6512	5729	88	6789	104	
			1365	182	.6755	5802	87	7023	104	
Flat										
EP2559 1270	10	12.6	1265	76	6821	6376	92	7166	104	
	7	12.45	1215	78	6847	6486	92	7260	106	
	5	12.4	1230	81	6842	6681	98	7298	107	
Original										
EP2559 1228	9	17.8	1365	84	.6615	5397	81	5486	82	
	4	18.54	1326	90	6580	643	120	7644	116	Questionable data

$$^{*}\tau = \frac{12gT_q}{\Delta C_q P_o}$$

Table VI-7. CRU Test Data

Test Date	Run No	Type	Config.	No Nozz	PSIG PNI	PSIA Pmin	PSI ΔP	°F TNI	W/sec w	Avg calc t mass	Comments
			N&W				P1000S			Theo	
6 4 74	208	Spin	122RA	10	825	Duct	8 5	62			No pump Req
No Pump			002 CRU								Noisy @ 52 Krpm
Req	209	Spin	002 CRU	10	600	Duct	8 5	60			Noisy @ 52 Krpm
	210	Spin	002 CRU	10	640	Duct	8 8	62			60 Krpm
	211	Accel	002 CRU	10	640	Duct	9	62			60 Krpm
	212	Accel	002 CRU	10	1360	Duct	10 5	70	0988		68 Krpm
6 6 74		Flow	002 CRU	10	850	15 03	9 trans	65	0448		Calc W 047 @
											Cd - 97
No pump							11 gage		0467		
Req		Flow	002 CRU	10	850	15 28	12	65	0681	Calc	Calc W 0681 @
											Cd 91
							16		087		
		Flow	002 CRU	10	1250	16 06	18	65	0878		Calc W - 0893 @
											Cd - 94
							23		0972		
		Flow	002 CRU	5	850		5 5	68	0277		Cd - 1 10
							7		0331		
	213	Accel	002 CRU	10	1250	Duct	7	72	0566	9	62 Krpm
	214	Accel	002 CRU	10	1250	6 50	7 25	75	067	97	69 5 Krpm PR - 1 91
	215	Accel	002 CRU	10	1250	6 50	7 25	75	067		67 5 Krpm
	216	Accel	002 CRU	2	1345	4 1	3 6	75	023	102	W Calc - 020 PR - 103
											Cd - 1 10
											62 5 Krpm Calc 02
	217	Accel	002 CRU	2	1345	Duct	3 6	75	023	94	52 Krpm
6 10 74		Blower	122BA			Exh Duct	ΔP				
		Back									
		Press	002 CRU	5	660	1	049				Pa 32 85-14 2
					850	3	147				
					1260	5	246				
					1360	6	294				
				10	850	76	367				ΔPw-2 2
											ΔPw-1 8
					850	1 35	66				
					1250	2 5 3	1 2 1 9				
					1350	2 9	1 2				ΔPw-2 3 ΔPw-1 1
											CB-92 44
					1250	3	1 5				
					850	1 8	88				

Table VI-K CRU Test Data (Cont.)

Test Date	Run No.	Type	Config.	No. Nos.	PSI: PNI	PSIA Peah	PT502 ΔP	°F TNI	lb. sec. W PT502	W PT0047	Comments
6-10-74	218	Spin	-1228A	3+2	850	Duct	4.1	57	.014		Cd=1.17 62 Krpm
			002 CRU								
		Flow	"	"	760	"	1.8	58	.0121	(1250)	Cd=1.17
					1140	"	7.1	"	.0574	.057	Cd=1.29
					650	"	1.1	54	.0268		Cd=1.13
	219	Spin/	"	2	640	"	.15	53	.00824		Cd=.80 40 Krpm
		Flow			840	"	.5	"	.0115		Cd=.86 45.5 Krpm
		"			1150	"	.9	"	.021		.020 W theo
6-12-74	220	Spin	"		670	"	-				30 Krpm
			Anti								
			Leak	10	1000	"	14.6				42 Krpm
			Ring								10.5 in-lb
											Stall
			Round Leaky Fuel Brg Housing								
6-11-74		Stall	-1228	10	850	Duct	10	60			6 in-lb
			002 CRU		1250		[illegible]	62			10 in-lb
			Anti	5	850	No Duct	3.75	60			4 in-lb
			Leak	3+2	1250	"	5.63	62			6.5
			Ring		850	Duct	3.75	60			4
					1250	"	5.63	62			6.5
		Stall	-1228	5	850	"	3.75	62			4
			002	3+2	1250	"	5.63	"			6.25
			No	10	850	"	10.4	"			6
			Ring		1250	"	15.9	"			10
		Stall	-1228	10	850	"	10.4	"			6
			003		1250	"	15.9	"			10
			No								
			Ring								
	221	Accel	"	"	"	"		"			Identical
	222		Ring	"	"	"		"			Spinup
										in-lb Pl	
6-26-74		Stall	-1228A	5	850	Duct		58	.0177	3	
Pa=20.45"			002 CRU		1240		.5	60	.0284	4.75	
= 14.41 PSIA		"	Ring	3+2	650		3.37	57	.0262	3.5	
Boat flush					1240		7.12	60	.0568	6.25	
With Nos.		"	"	5	664		2.62	55	.025	3.5	
Plt & Indiv.					1230		5.63	60	.049	7.30	
Nos. W cb		"	"	5+2	660		6.9	55	.0395	4.75	
					1200		13.1	60	.0725	10.30	
		"	"	10	650		14	55	.054	7	
					1150		26	60	.103	14	
		"	"	2	650		.5	60	.0106	1.5	
					640		.7	60	.0145	2.0	
					1130		1.[illegible]	62	.0204	3.0	
					650	1.0	.5	62	.0150	1.75	
					650	2.5	.7	62	.0145	2.5	
					1160	3.3	1.05	65	.0204	3.75	
	223	Accel	"	2	1.[illegible]	3.3	1.05	68	.0204		
					P.S.=362						
		Stall	"	3+2	655	3.0	3.55	60	.050	4.75	
					640	4.0	5	65	.0366	6.0	
					1160	6.3	6.9	70	.053	8.25	
	224	Accel	"	"	1160	6.3	6.9	70	.053		
					P.S.=1164						
		Stall	"	7	650	5.1	7.0	60	.0358	6.25	
					655	6.3	9.4	65	.0625	8.0	
					1135	8.3	12.5	68	.076	10.5	
	225	Accel	"	"	1135	8.3	12.5	68	.070		
					P.S.=137						
6-25-74	226	Stall	"	"	679	Duct	"				51 Krpm
	227	"	"	10	990	"	"				58.5 Krpm
	228	"	"	"	600	"	11.26	55	.0435		61.5 Krpm

nozzle plate was not adequately clean and installing flush parts to clean the nozzles was sufficient to enable predicted performance to be achieved. There was still a discrepancy between measured and calculated flow through the nozzles so ... ter brass plugs were installed in place of the steel plugs to minimize leakage that might escape through the flush ports. The resulting non-dimensionless data is shown in Table VI-L and Figure VI-16 from which it can be seen that reasonable correlation to prediction exists.

VALVES

Three hot gas solenoid valves are used in the Set, one shutoff and two control valves. Two designs were tested, one designated AG56C-21 and the other GA-17310. Both are pilot actuated valves with the former being significantly smaller, lighter in weight and more leak tight than the latter. This valve is used in Set No. 1 and often experienced sticking. They were replaced with the GA-17310 valves which cycled well (except at low voltage conditions).

For Set No. 2 both valves were modified. The AG56C 21 internal clearance was increased. The GA-17310 valve was modified for a Hastelloy 25 seat and a Stellite 6 hard facing over 17-4 PH poppet for better internal leakage and long term endurance. The solenoids of both were also increased in size for higher pull-in power at lower voltage.

The GA-17310 valves are used in Set No. 2 and have performed flawlessly during testing.

PITOT PUMP

The Set No. 1 pitot probe (EP2559-1148) operated at 28% efficiency (reference Figure VII-9), and was internally milled and externally shaped by hand. In an effort to reduce the cost of manufacturing the Set No. 2 pitot probe (EP2559-5969) was stamped internally and milled to shape externally with minimum hand finishing. This accounts for the more simplified shape of this probe. Rig tests showed little difference in performance between the long and short nose versions of a given configuration so the Set No. 2 probe was made with the short nose. Little difference was intuitively expected in efficiency.

BOOST PUMP

The boost pump (Micropump Model 10-90-316-961) supplied with Set No. 1 included a 2 fluted inducer. The pump showed difficulty in priming and operating at a low NPSH. It was concluded that an improved pump would be desirable.

For Set No. 2, two other configuration pumps were tested. One was a Micropump Model 10-90-316-961 modified with a single flute. This pump experienced less difficulty in priming and was able to pump its rated capacity down to 9.5 psia where the pump lost prime.

The other configuration pump tested was Micropump Model 12-00-303-763 gear pump modified with an oversized (3/8" diameter) inlet. No difficulty was experienced in priming under very low conditions of NPSH and the pump exceeded capacity requirements in both head rise and flow. The pump was tested under simulated conditions in the hotwell with CP-25 as the working fluid down to NPSH = 0.73 psia and an inlet head of 4.5 inches. The pump performed satisfactorily under these conditions and was able to execute a series of starts and stops without losing prime. The pump characteristics are shown in Figure VI-17.

Table VI-L Data Summary, Brass Flush Port Fittings

GN_2 Accel Data	2 Noz	3+2 Noz	5+2 Noz
Speed (Krpm)	35	50	50
P R	382	232	166
T meas (ft lb)	.218	.301	.411
T Pred (ft-lb)	.171	.313	.445
meas (lb/sec)	.017	.049	.071
pred (lb/sec)	.017	.039	.057
meas	.587	.288	.275
pred	.574	.358	.342
pred	.448	.373	.370

GN_2 Stall Data	PNI (Pre)	T (Pre)	PNI (Post)	T (Post)
2 Noz	840	2	1060	2.75
	1190	3		
5 Noz	650	3.5	1060	6
	1240	7.4 - 8.3		
7 Noz	660	4.75	1018	8.5
	1200	10.4		
10 Noz	650	7	1000	12.5
	1150	14		

- GN_2 No Load Spin Data

  Pre Brass : 390 PSIG @ 50.5 Krpm
  500 PSIG @ 61.5 Krpm

  Post Brass : 480 PSIG @ 57 Krpm

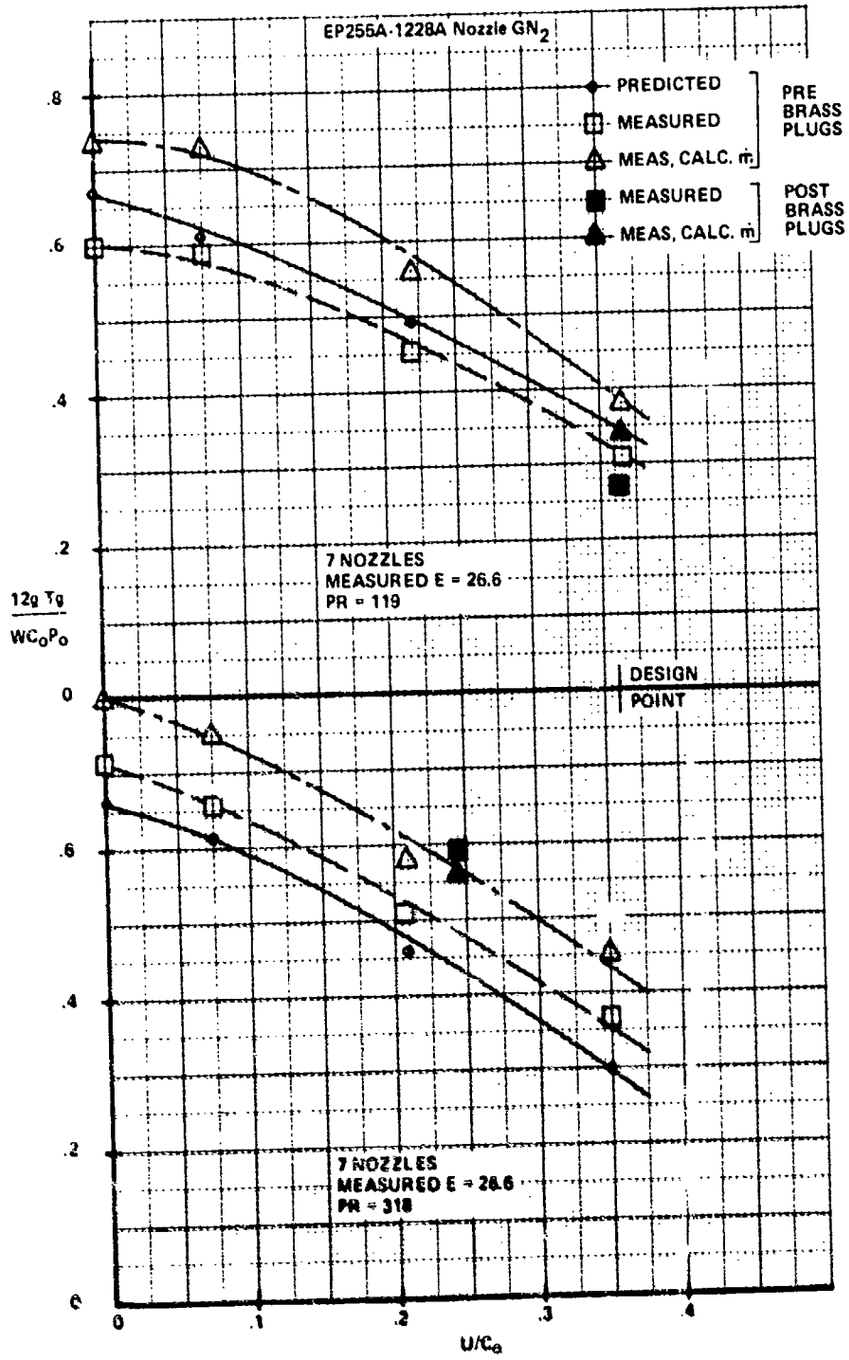

Fig. 46 VI-VS Nondimensional Torque vs. Speed

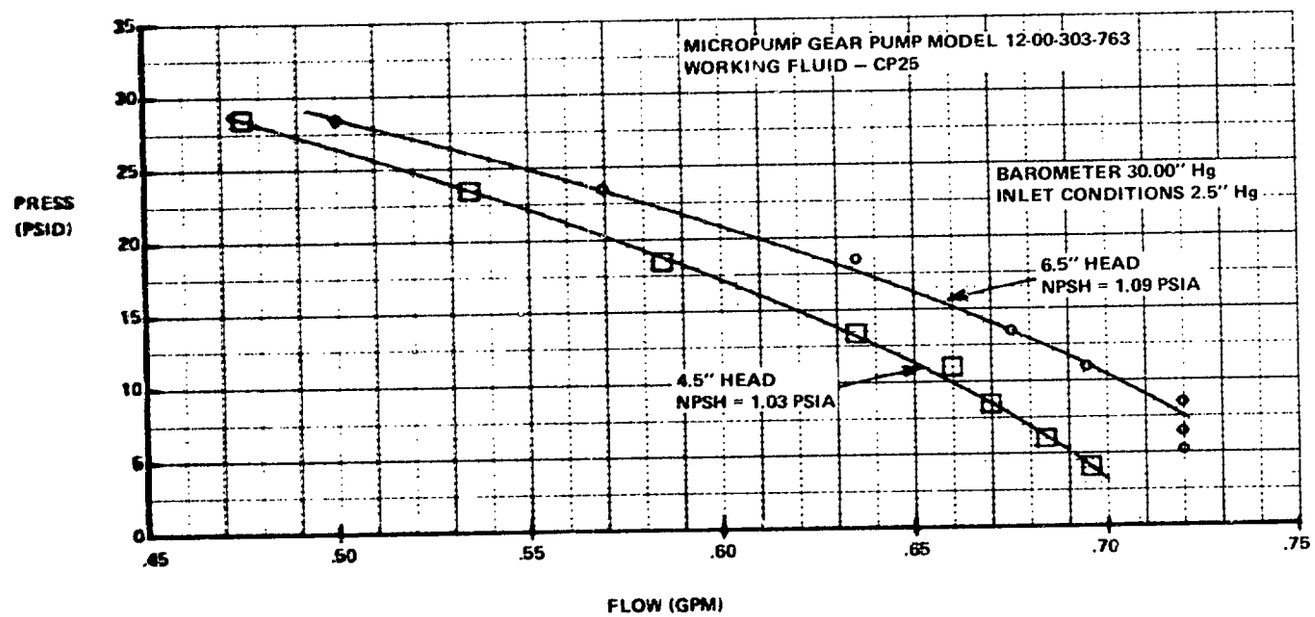

Figure VI-17 Pressure vs. Flow

There are conditions in the set where the NPSH could be on the order of the height of the fluid over the inlet of the pump. The worst case occurs at shutdown or during a load reduction where the condenser fan cools the condensate to a temperature below that of the fluid in the hotwell. Under this condition the saturated fluid in the hotwell will boil. To ascertain the capability of the 12-00-303-763 modified configuration pump to continue to pump, this condition was simulated using water in a bell-jar and pulling vacuum until a rolling boil occurred. Visually, it was observed that pumping continued.

It was decided if even a slight amount of subcooling could be done between the hotwell and the inlet of the pump, that some positive margin in pumping characteristics could be maintained. A calculation at a 160°F hotwell temperature and 100°F air temperature surrounding the 3 inch + transfer tube indicated that by finning the tube, 2°F of subcool could be induced.

The cooling fins and the as-described modified gearpump were selected for Set No. 2.

START APPROACH

The Set No. 1 start approach depends upon an accurate measurement of the heater fluid temperature to trigger the opening of the shutoff and control valves. With the accumulators in the system to absorb the expanding fluid backflowing from the heater, system pressure would build up as the temperature increased. When the temperature and pressure are in the vicinity of the design point, the valves are signaled to open and the turbine would accelerate to control speed in a matter of seconds.

The heater outlet is at the high point and so the control thermocouple was placed at the outlet under the hypothesis that the hotter fluid would migrate there. The result was that with the valves closed during the heatup period, the thermocouple was not sufficiently buried in the heater to be exposed to the maximum temperature of the fluid. Overheating of the fluid during startup could occur and was prevented by premature manual actuation of the valves to expose the thermocouple to flowing fluid. Only then did it accurately register the temperature. To rectify this condition for a satisfactory automatic start approach for Set No. 2, the following was considered:

Construct new heater with buried temperature sensors.

Sense heater inlet to pick up the temperature of the fluid backflowing out during heatup.

Cycling the start flow valve to intermittently expose the outlet thermocouple to hot fluid.

Use pressure as an indication of the start signal.

Bootstrap or assisted bootstrap start of which there are a variety of techniques.

Any of these approaches required a change to the controller. Additionally, an important consideration was the differences in complexities between the various methods.

Tests were conducted at MERDC on Set No. 1 modified for a start pump assisted bootstrap start. These were not fully automatic starts but were manually assisted. This data is presented in Figures VI-18, VI-19, and VI-20. These simulated starts are acceptable. A plot of pump pressure (pilot pump against that used on Set No. 1) vs. speed (Figure VI-21) implies that the pilot pump will overcome the start pump at about 115 psi and 21,000 rpm.

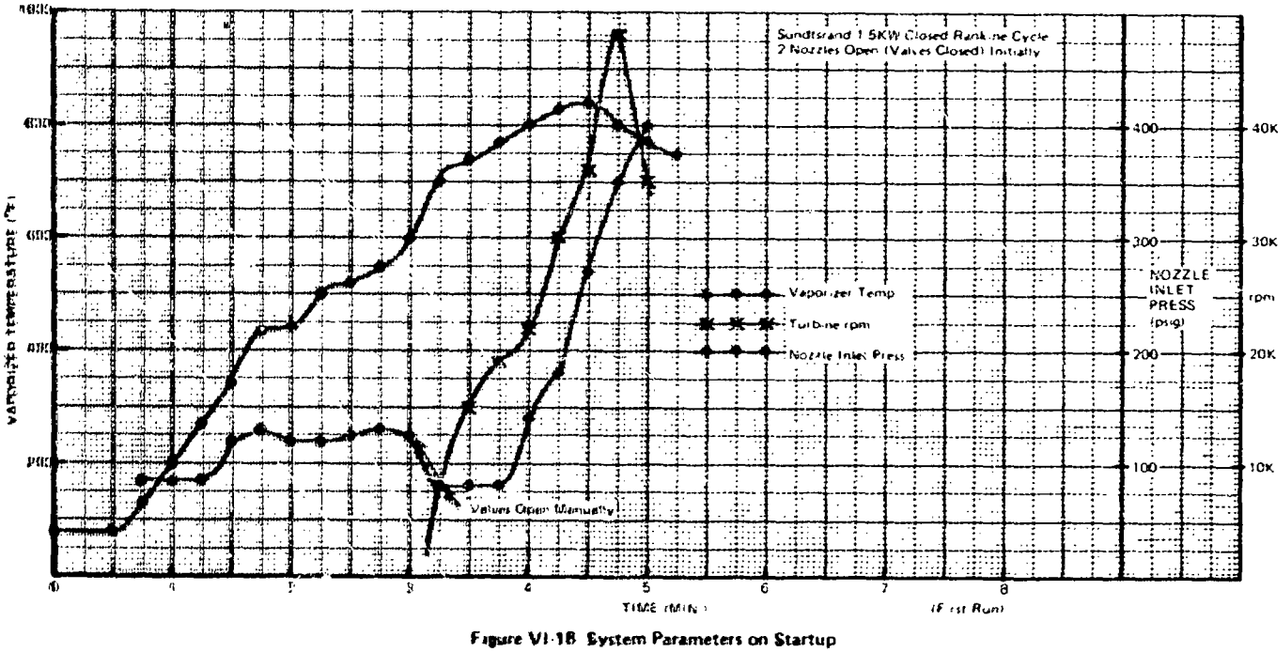

Figure VI-18 System Parameters on Startup

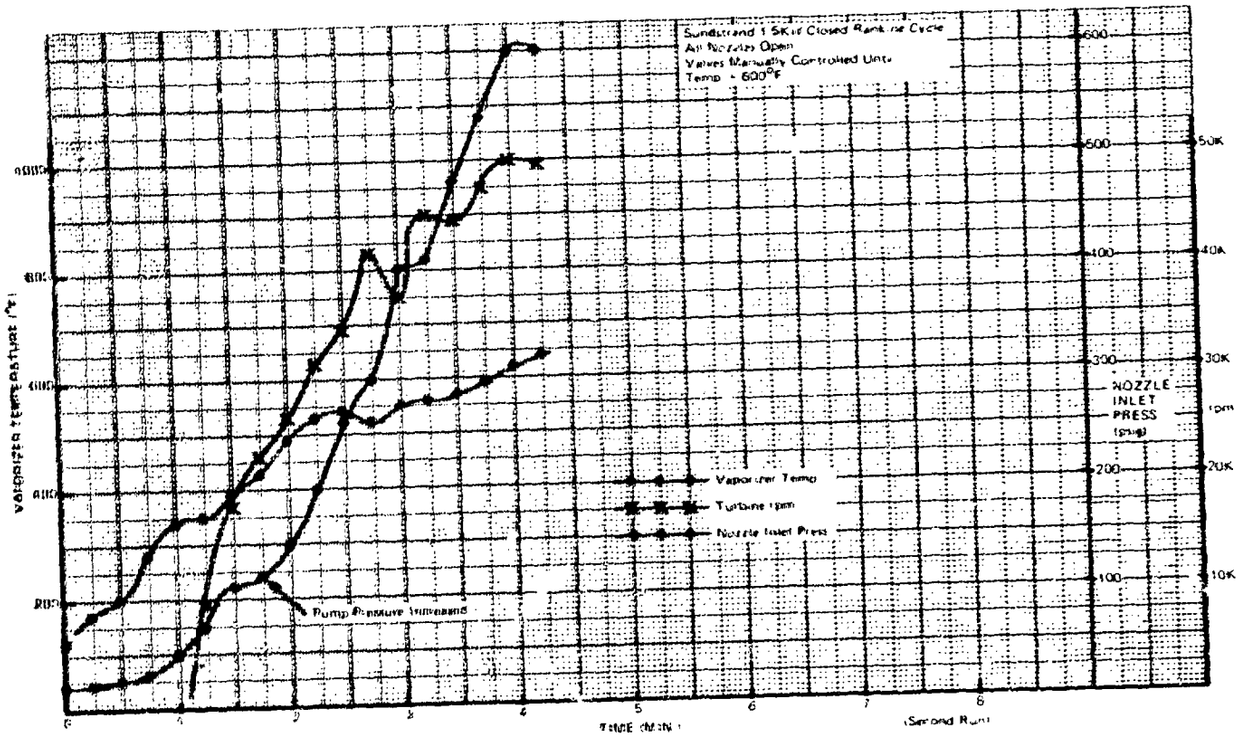

Figure VI-19 System Parameters on Startup

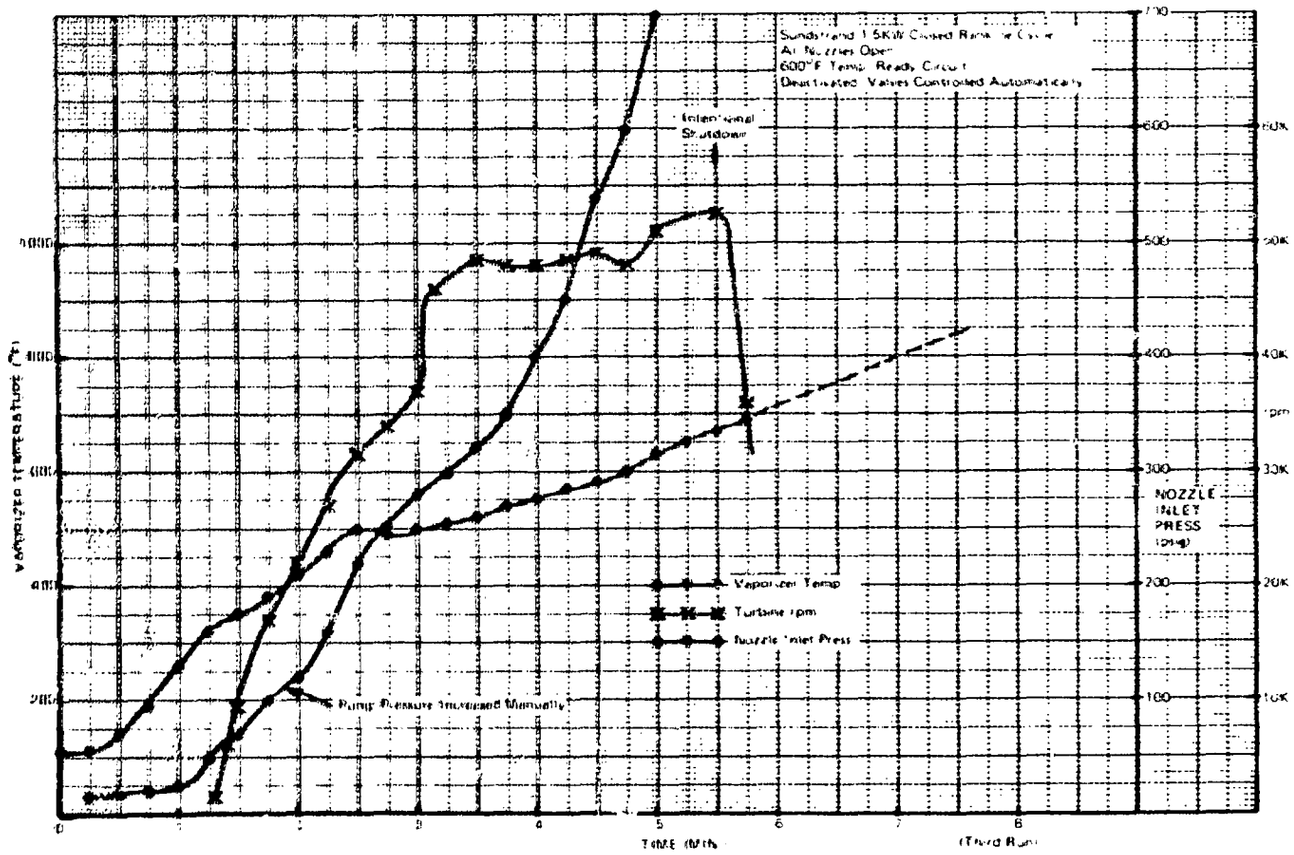

Figure VI-20 System Parameters on Startup

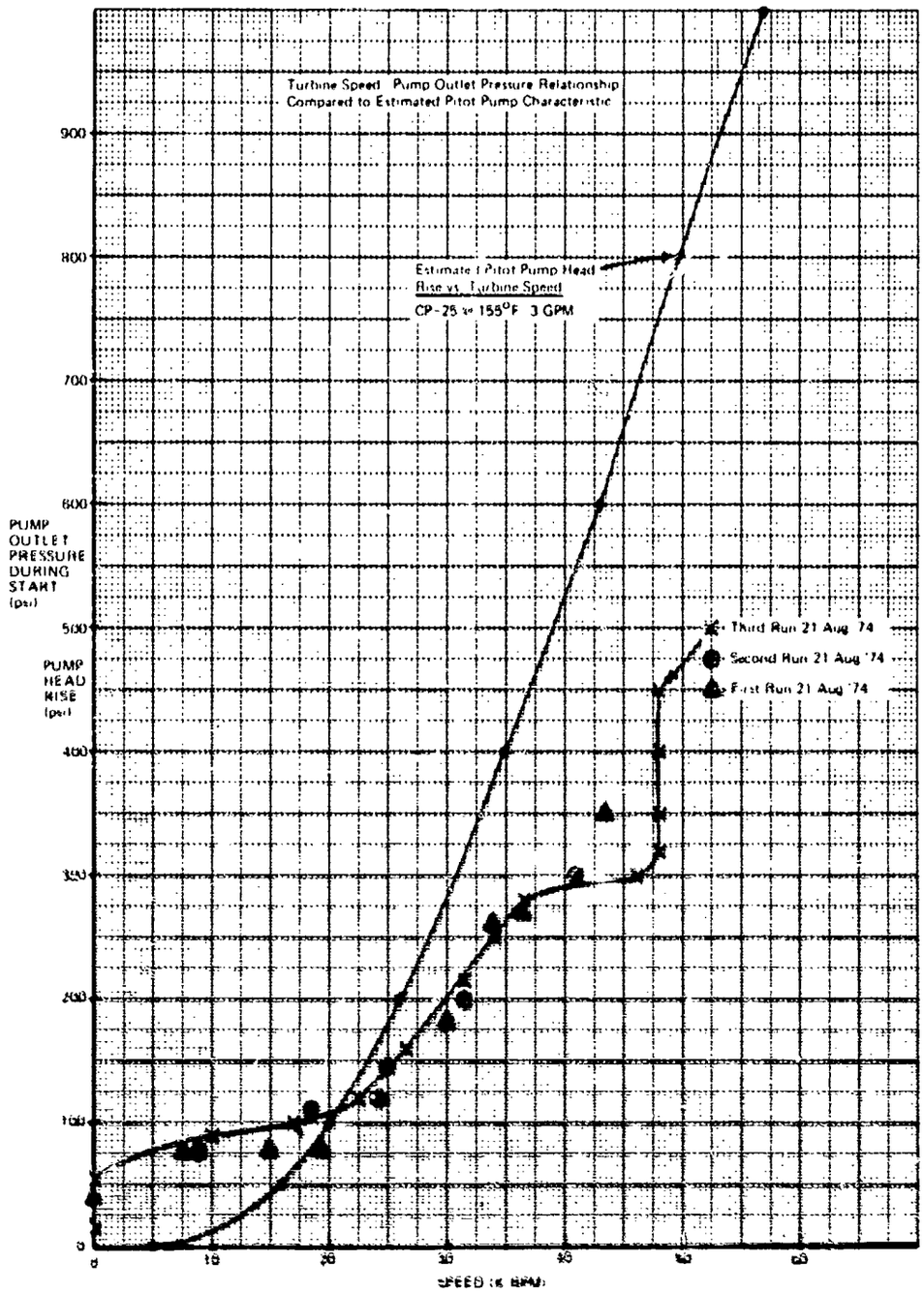

Figure VI-31 1.5KW ORC Bootstrap Start

These tests provided justification to switch to a start pump assisted start approach using a pump with sufficient margin to provide the required pressure at 10 nozzles worth of flow. A calculated flow value of about 0.1 gpm as a minimum would be necessary to be provided by the start pump.

Two Wankel rotor pumps were tested; data is presented in Figures VI-22 and VI-23. At the risk of being oversized, the P260 pump was selected due to the marginal head rise of the P193A1 pump. The finished hermetic assembly is shown in Figure VI-24.

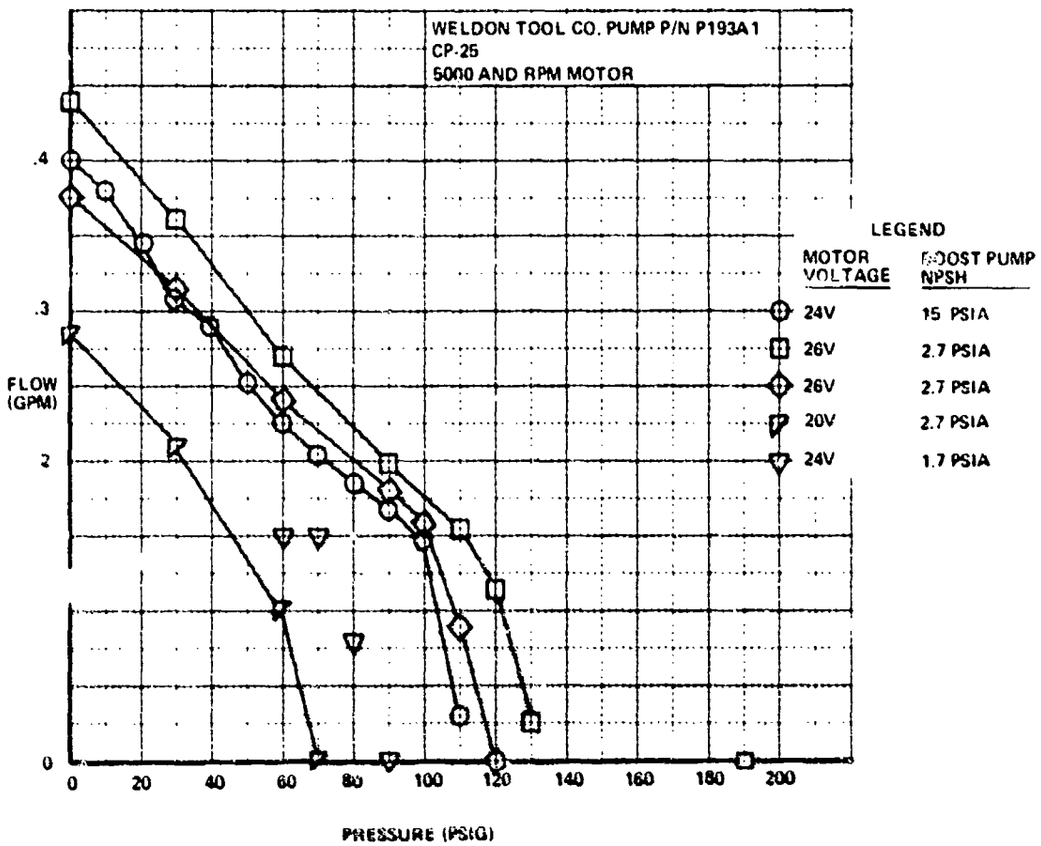

Figure VI-22 Performance Test

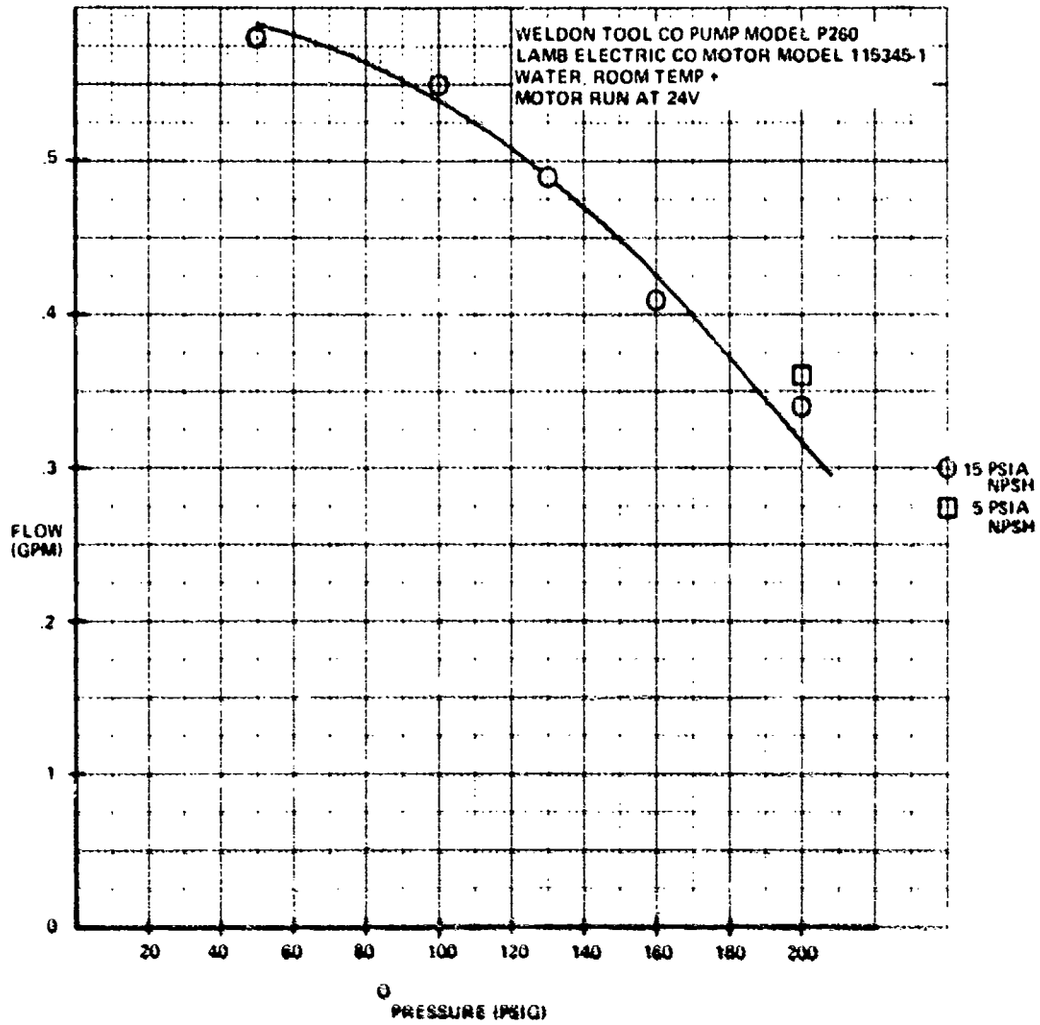

Figure VI 23 Performance Curve

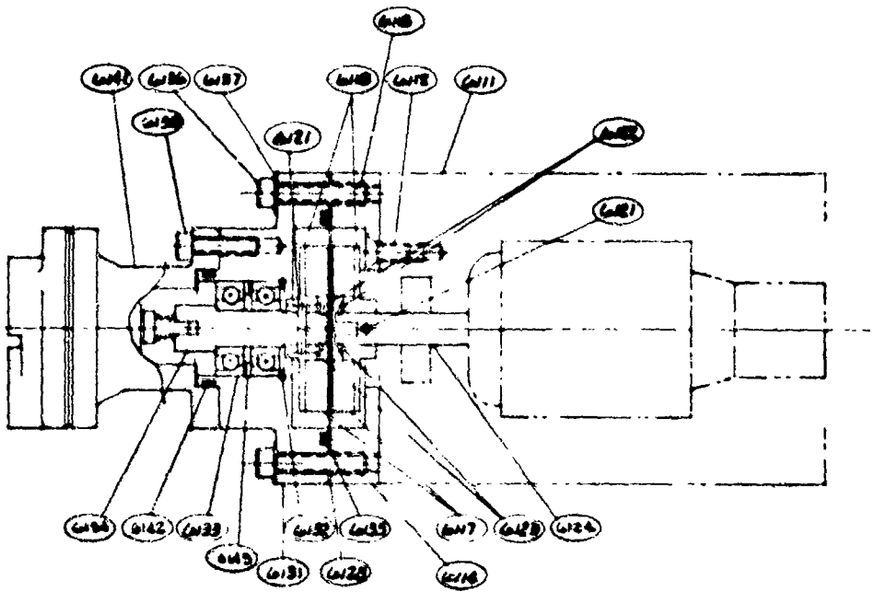

Figure VI-24 Start Pump, Coupling, Motor Assembly
Ref EP 2559-V101

SECTION VII

SYSTEM DEVELOPMENT

Unit No. 2 was tested as a complete packaged system except that the control box was not installed and an external power supply was used to operate the start pump and several parasitic loads. Figures VII-1 through VII-5 are various views of the 2' x 2' x 2' system.

Thirty (30) tests were conducted at Sundstrand and sixteen (16) conducted at USAMERDC laboratories which form the basis of knowledge about the system at this writing. Throughout the test program several changes were made to improve operation. Figure VII-6 is a schematic which represents Sundstrand post Run 017 tests while Figure VII-7 is an update illustrating changes made at USAMERDC (most of these changes were made prior to 6-20-75).

Test data is illustrated in Table VII-A (Sundstrand tests) with data analysis illustrated in Table VII-B. Table VII-C lists data and analysis conducted on the Set at USAMERDC. The results of these tests indicate that the Set is not producing the required amount of output power. The following discussion elaborates on this result.

The changes made between Figures VII-6 and VII-7 were an attempt to isolate possible heat shunts to ascertain any effect on output power. These included the following:

Two of four condenser drains capped to induce the condensate to drain through two active drains.

Hand valve installed in the one of two active drains which dumps condensate into the hotwell close to the exhaust housing.

The regenerator condensate drain closest to the regenerator vapor inlet port had a hand valve installed.

The effect of these with and without the valves open did not materialize in any obvious change to the output power. In addition, the hotwell was modified so that condensate would drain through the main hotwell into a modified hotwell. This also had no noticeable change in output power. Other differences between Figures VII-6 and VII-7 are immediately downstream of the start and pitot pumps to gain knowledge about automatic start characteristics.

STEADY STATE OPERATION

Figure VII-8 summarizes the original design point performance. Review of the Tables VII-A, B, and C indicates that the data falls into two categories:

Data at greater than design turbine inlet pressure (PNI)

Data at greater than design turbine outlet pressure ($P_c + \Delta P \approx P_c + .3$)

This partly, but not fully, explains the low power. Other contributing areas are summarized as follows:

Figure VII-1 Set No. 2 on Test Stand

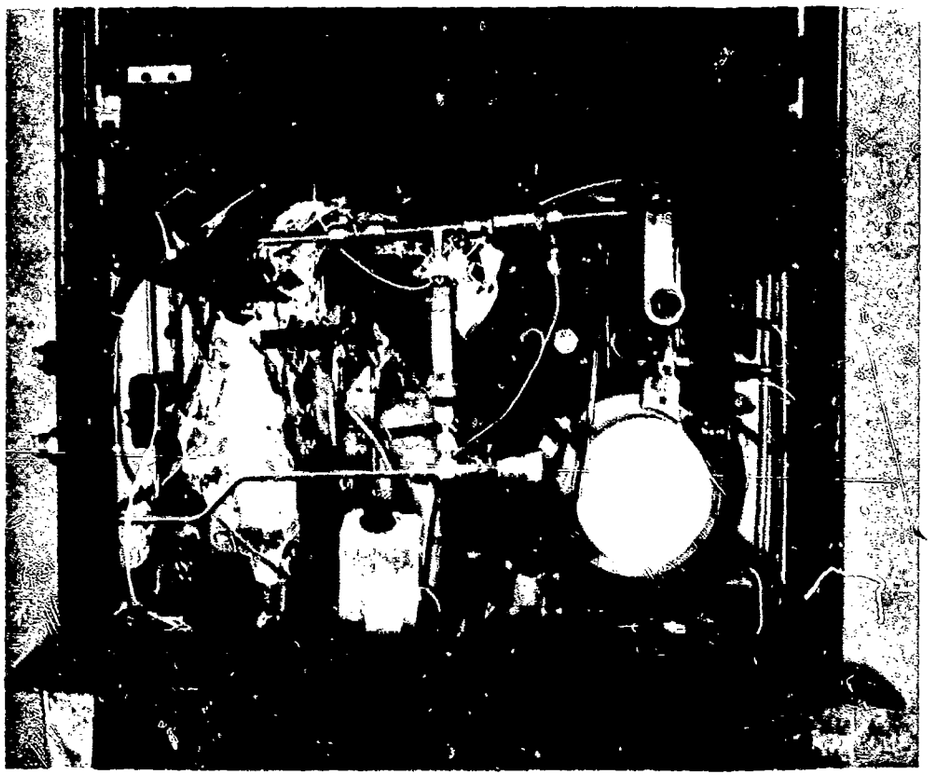

Figure VII-2 Set No 2 Front Door Open

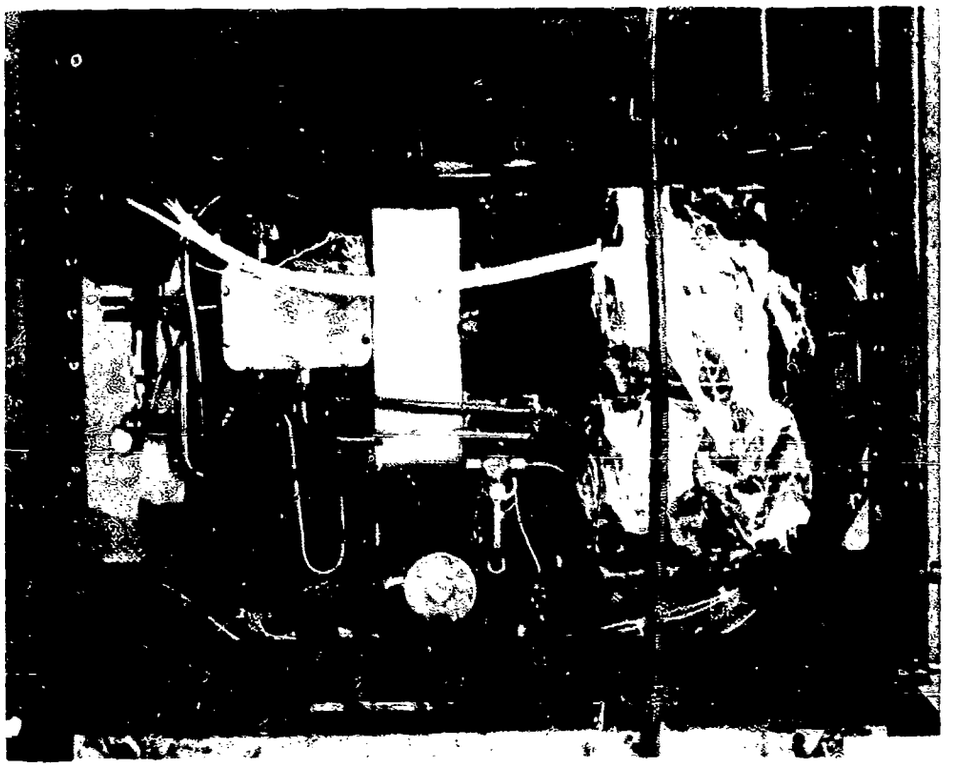

Figure VII-3 Set No. 2 Right Side Panel Removed

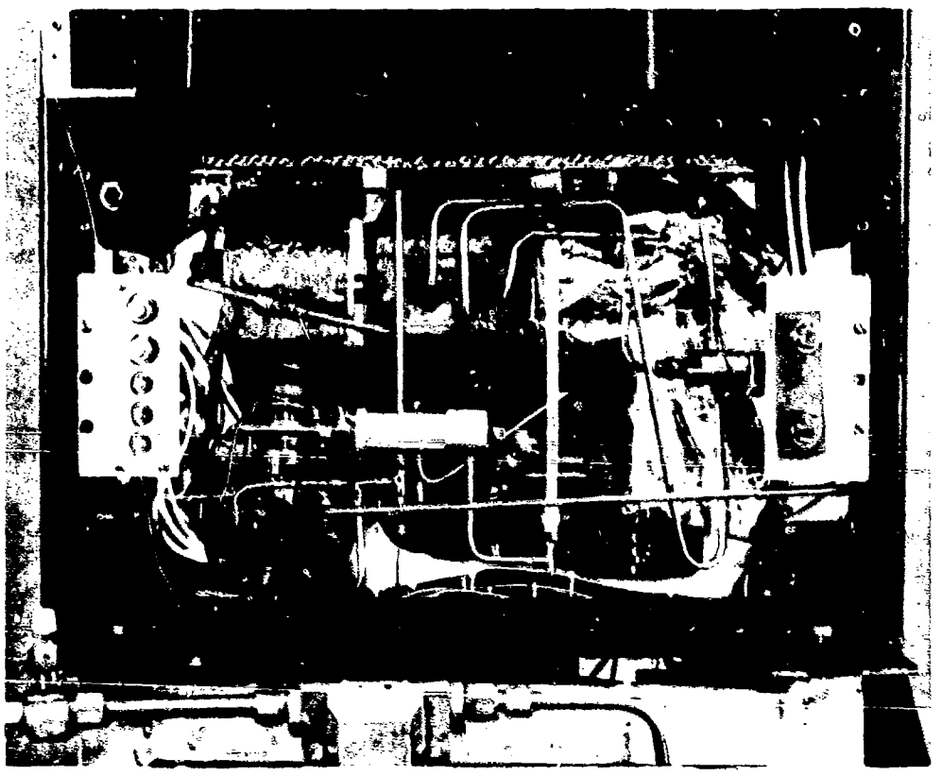

Figure VII-4 Set No. 2 Left Side Panel Removed

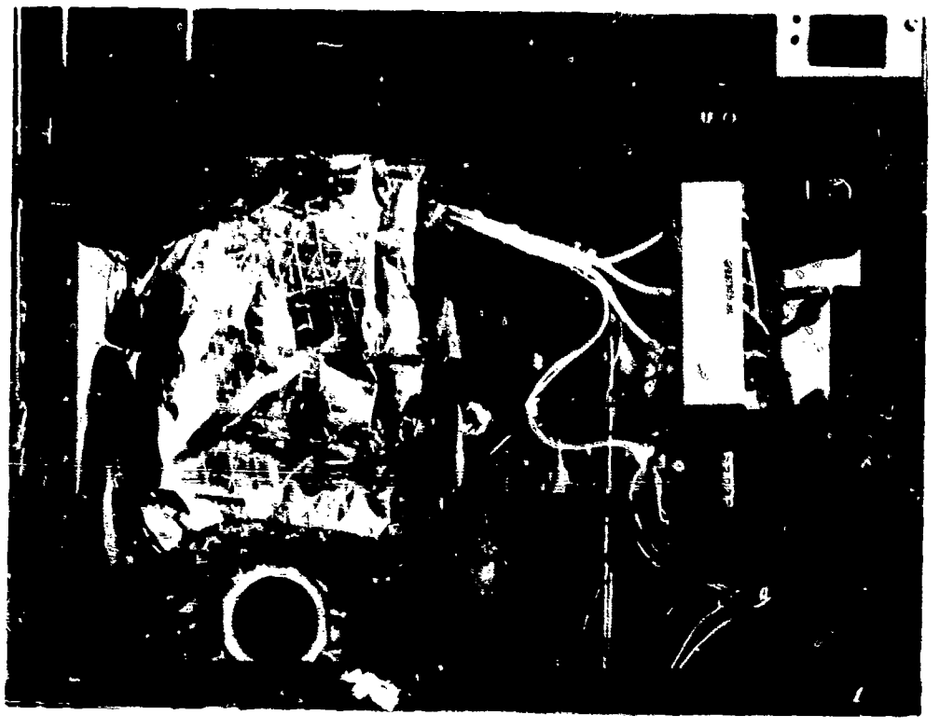

Figure VII-5 Set No. 2 Back Panel Removed

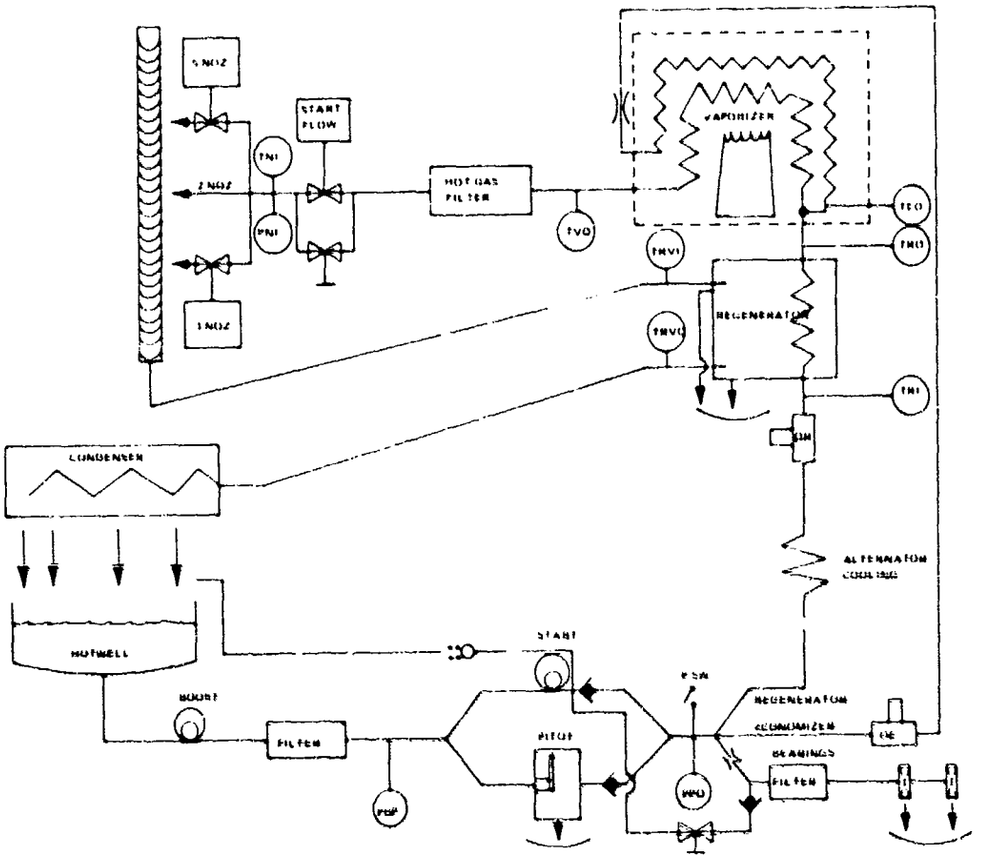

Figure VII-6 1.5 KW MERDC Functional Schematic (Post Run 017)

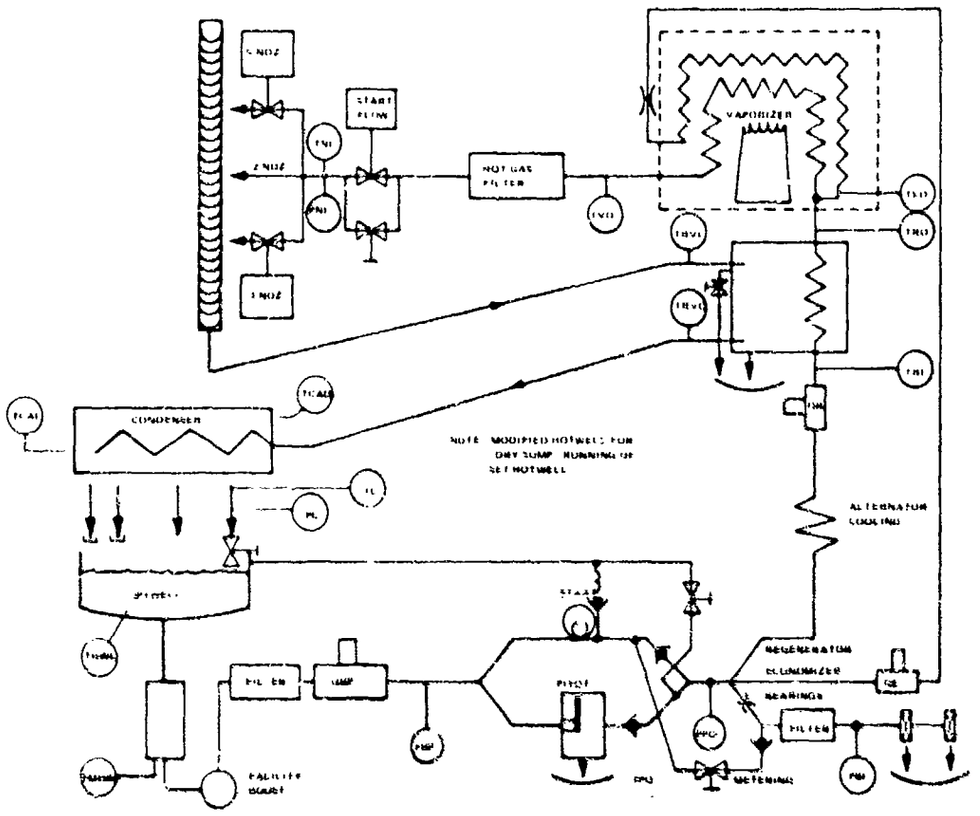

Figure VII-7 1.5 KW Closed Rankine Cycle Functional Schematic

Table VII-A Sundstrand Test Data, Set No. 2

[illegible]	[illegible]	[illegible]	[illegible]	[illegible]	[illegible]	[illegible]	[illegible]	[illegible]	[illegible]	[illegible]	[illegible]	[illegible]	[illegible]	[illegible]	[illegible]	[illegible]	[illegible]	[illegible]	[illegible]	[illegible]	[illegible]
[illegible]	[illegible]	[illegible]	[illegible]	[illegible]	[illegible]	[illegible]	[illegible]	[illegible]	[illegible]	[illegible]	[illegible]	[illegible]	[illegible]	[illegible]	[illegible]	[illegible]	[illegible]	[illegible]	[illegible]	[illegible]	[illegible]

Table VII-A Sundstrand Test Data, Set No. 2 (Cont.)

Date	Run	Dynamic Load (kg)	Wind (mph)	Air Temp (°F)	Dr. Load (kg)	Air Dew Pt (°F)	Wind Dir (°)	Wind Vel (mph)	Air Temp (°F)	Wind Dir (°)	Wind Vel (mph)	Comments
[illegible]	[illegible]	[illegible]	[illegible]	[illegible]	[illegible]	[illegible]	[illegible]	[illegible]	[illegible]	[illegible]	[illegible]	[illegible]

Table VII-A Sundstrand Test Data, Set No 2 (Cont.)

[illegible]	[illegible]	[illegible]	[illegible]	[illegible]	[illegible]	[illegible]	[illegible]	[illegible]	[illegible]	[illegible]	[illegible]	[illegible]	[illegible]	[illegible]	[illegible]	[illegible]	[illegible]	[illegible]	[illegible]	[illegible]	[illegible]	[illegible]	[illegible]	[illegible]	[illegible]	[illegible]	[illegible]	[illegible]	[illegible]	[illegible]	[illegible]

Table VII-A Sundstrand Test Data, Set No 2 (Cont.)

Table VII-B 1.5 KW Data Analysis Summary

Table VII-C Test Data Reduction Sundstrand 1.5 KW Closed Rankine Cycle, Serial No. 2

[illegible]	4	4	2	4	2	3	4	1	2	3
[illegible]	[illegible] 75	[illegible] 75	[illegible] 75	[illegible] 75	[illegible] 75	[illegible] 75	[illegible] 75	1 JUL 75	1 JUL 75	1 JUL 75
[illegible]	[illegible]	[illegible]	[illegible]	[illegible]	[illegible]	[illegible]	[illegible]	[illegible]	[illegible]	[illegible]
[illegible]	6	80	68	63	68	72	63	14	14	14
[illegible]	.468	[illegible]	.874	[illegible]	[illegible]	[illegible]	[illegible]	[illegible]	.322	.451
[illegible]	.588	.448	.568	.589	.568	.534	.546	.496	.499	.528
[illegible]	.476	.200	.221	.221	.161	.156	.148	.131	.120	.168
[illegible]	.986	.367	.887	.376	.365	.378	.339	.336	.373	.449
[illegible]	.269	.185	.209	.230	.248	.243	.241	.137	.225	.216
[illegible]	.401	.078	.169	.176	.077	.076	.075	.256	.375	.372
[illegible]	.498	.258	.486	.812	.376	.319	.316	.134	.295	.287
[illegible]	.3[illegible]	.446	.548	.362	.163	.359	.357	.262	.332	.334
[illegible]	88.8	70.2	85.2	87.6	112.4	111.7	99.4	56.6	92.7	80.9
[illegible]	82.8	8[illegible].0	86.4	80.6	81.6	81.3	31.8	23.7	31.8	29.6
[illegible]	489.6	106.8	125.5	128.5	136.3	131.4	130.5	79.3	123.5	118.5
[illegible]	128.2	[illegible]	225.6	145.1	148.6	140.1	145.1	109.[illegible]	139.2	137.7
[illegible]	0.1	0.1	4.0	2.1	2.1	2.1	2.1	[illegible]	[illegible]	2.1
[illegible]	8[illegible]	5[illegible]	6[illegible]	[illegible]	6755	6[illegible]	67653	1[illegible]	53[illegible]	53133
[illegible]	[illegible]	448	456	437	441	444	446	433	449	450
[illegible]	5.60	6.21	5.01	7.10	8.75	8.01	9.13	5.21	7.50	7.10
[illegible]	10.04	10.58	11.47	11.10	11.51	11.04	12.10	9.40	9.66	9.83
[illegible]	[illegible]	45.48	45.16	35.60	31.71	31.26	31.95	47.69	45.64	48.64
[illegible]	[illegible]	[illegible]	[illegible]	588.7	516.0	589.70	589.70	721.7	569.70	629.70
[illegible]	[illegible]	[illegible]	681.09	672.23	673.08	663.03	663.03	630.5	531.69	535.07
[illegible]	105	167	175	142	175	185	185	143	177	186
[illegible]	185	296	661	830	361	395	615	312	630	639
[illegible]	611	657	656	665	645	660	675	662	698	510
[illegible]	850	[illegible]	831	625	575	666	663	722	722	733
[illegible]	766	671	701	611	608	642	665	637	697	726
[illegible]	805	896	676	678	658	531	525	627	518	554
[illegible]	826	256	795	267	275	201	399	23[illegible]	789	335
[illegible]	85	6[illegible]	665	117	125	125	153	134	143	129
[illegible]	470	145	166	156	162	168	170	110	162	164
[illegible]	185	180	178	165	175	185	185	153	178	190
[illegible]	80	86	85	82	85	85	95	87	88	85
[illegible]	106	66	61	85	115	102	110	83	102	107
[illegible]	476	875	658	862	369	376	390	373	436	414
[illegible]	66	9[illegible]	65	82	96	95	96	63	90	93
[illegible]	[illegible]	[illegible]	[illegible]	61839.	61838.	61838.	61838.	[illegible]	8.	8.
[illegible]	36901.	83367.	[illegible]	88018.	86475.	84724.	34373.	2[illegible]97.	34512.	33612.
[illegible]	87967.	7886.	34989.	8176.	8783.	12566.	12261.	7306.	12171.	12796.
[illegible]	68078.	9[illegible].	87287.	8370.	9756.	16609.	16605.	3317.	17797.	11844.
[illegible]	.267	.195	.784	.361	.767	.196	.217	.136	.235	.250
[illegible]	.818	.856	.869	.816	.106	.165	.083	.131	.198	.164
[illegible]	.608	.337	.872	.635	.607	.613	.036	.495	.701	.692
[illegible]	.686	.642	.469	.476	.383	.383	.372	.437	.511	.535
[illegible]	6.0	62.2	77.6	11.3	13.1	17.3	21.5	35.3	16.6	14.3
[illegible]	.638	.670	.679	.348	.344	.110	.185	.277	.233	.271
[illegible]	.408	.658	.628	.671	.558	.548	.583	.631	.579	.602
[illegible]	.660	.628	.752	.706	.739	.729	.711	.831	.737	.723
[illegible]	.738	.676	.606	.662	.656	.617	.676	.569	.677	.693
[illegible]	[illegible]	0.000	1.281	.789	.838	.829	.834	[illegible]	[illegible]	[illegible]
[illegible]	0.000	[illegible]	1.028	-.031	-.056	-.031	-.037	[illegible]	0.000	0.028
[illegible]	.[illegible]	-.304	-.045	-.896	-.198	-.551	-.193	-.136	-.150	.653

Table VII-C Test Data Reduction Sundstrand 1.5 KW Closed Rankine Cycle, Serial No. 2 (Cont.)

Data Point	1	2	3	4	5	6	7
Date	18 JUL 75	18 JUL 75	18 JUL 75	18 JUL 75	18 JUL 75	18 JUL 75	18 JUL 75
Set Speed	64.9	65.1	65.1	65.1	65.2	65.2	65.3
Run Number	15	15	15	15	15	15	15
Burner Power (kW)	.526	.566	.596	.535	.536	.536	.536
Mechanical Power (kW)	.476	.507	.546	.558	.546	.558	.558
Gen Electrical Power (kW)	.066	.056	.076	.060	.056	.054	.056
External Power (kW)	.421	.476	.476	.492	.490	.504	.532
Gas Side Flow (lbm/s)	.202	.197	.225	.214	.217	.217	.214
Condenser Flow (lbm/s)	.170	.171	.197	.178	.176	.174	.173
Boiler Flow (lbm/s)	.252	.250	.202	.250	.292	.291	.287
Body Pump Flow (lbm/s)	.370	.386	.399	.384	.377	.388	.383
Gas Side Pressure (psia)	75.6	73.6	87.7	86.2	89.7	89.7	89.2
Condenser Pressure (psia)	28.7	28.3	31.4	31.3	30.9	30.5	30.8
Boiler Pressure (psia)	120.6	121.7	124.6	119.4	126.6	120.1	118.2
Body Pump Pressure (psia)	159.6	160.5	166.4	152.5	155.9	165.8	149.6
Fuel Flow (lbm/hr)	2.3	2.0	2.4	2.2	2.3	2.3	2.0
Turbine Inlet Temp (°F)	1356.1	1360.1	1351.0	1322.0	1363.0	1370.0	1298.0
Gas Inlet Temp (°F)	437	446	451	454	456	452	437
Condenser (psia)	5.87	5.80	5.90	5.70	5.83	6.83	5.88
Body Pump (psia)	8.44	9.83	11.06	10.33	10.25	10.25	10.00
Bearing Press (psia)	47.82	45.75	39.66	42.32	42.57	42.38	42.39
Feed Pump (psia)	716.75	656.70	566.71	574.70	666.70	686.73	686.70
Boiler Inlet (psia)	668.67	619.56	506.66	536.45	568.50	568.55	538.45
Gas Inlet Temp (°F)	542	547	590	585	585	590	590
Gas Outlet Temp (°F)	611	631	605	605	515	520	538
Condenser Temp (°F)	525	565	545	569	570	575	568
Boiler Temp (°F)	765	851	745	825	833	845	845
Body Inlet (°F)	765	841	765	815	825	825	835
Gas Inlet Temp (°F)	527	525	622	625	645	655	650
Gas Outlet Temp (°F)	244	321	341	360	365	353	358
Condenser (°F)	121	122	140	131	135	135	130
Feed Pump In (°F)	122	147	166	160	160	162	162
Feed Pump Out (°F)	151	171	175	187	185	182	185
Condenser Sub In (°F)	70	87	75	93	83	90	80
Condenser Sub Exit (°F)	85	95	100	130	102	108	100
Heater Tank (°F)	412	455	440	455	460	465	470
Ambient Temp (°F)	81	81	85	85	85	90	90
Net Rejected (BTU/hr)	36663.	0.	0.	631.4.	0.	0.	0.
Net Absorbed (BTU/hr)	36873.	36546.	37356.	37547.	37159.	37587.	36668.
Net Abs. Air (BTU/hr)	22811.	25102.	25576.	25287.	25572.	17359.	16664.
Net Rej. Cycle (BTU/hr)	8386.	11540.	15513.	16462.	15628.	16306.	16121.
Pump Eff. Stage (%)	.161	.161	.237	.174	.174	.206	.182
Pump Eff. DS Pump (%)	.132	.124	.100	.109	.113	.116	.118
Turbine Eff (%)	.676	.702	.710	.795	.734	.679	.697
Turbine Eff. DS Pump (%)	.573	.607	.624	.686	.679	.646	.670
Heat Absorbed DS Pump (%)	30.2	35.4	30.6	32.4	27.9	23.5	23.9
Electrical Eff (%)	.275	.292	.296	.236	.253	.272	.266
Elec. Eff DS Pump (%)	.626	.642	.632	.624	.629	.625	.626
Mechanical Efficiency (%)	.616	.656	.681	.685	.693	.695	.682
Cycle Efficiency (%)	.675	.722	.759	.734	.737	.713	.726
Carnot Factor	.820	0.000	0.000	.871	0.000	0.000	0.000
Overall Efficiency (%)	.004	0.000	0.000	.004	0.000	0.000	0.000
Net Output Power (kW)	.406	.451	.436	.448	.476	.452	.444

Table VI-C Test Data Reduction Sundstrand 1.5 KW Closed Rankine Cycle Serial No. 2 (Cont.)

DATA POINT	1	2	3	4	5	6	7
DATE	16JUL 75	16JUL 75	16JUL 75	16JUL 75	16JUL 75	16JUL 75	16JUL 75
[illegible] POWER	69.6	0.0	.0	0.0	0.0	0.0	66.6	
[illegible] NUMBER	16	16	16	16	16	16	16
OUTPUT POWER (KWHR)	6.[illegible]	6.[illegible]	6.[illegible]	.179	.179	.173	.167
[illegible] EFFICIENCY (KWHR)	.648	.648	.648	.577	.595	.665	.549
[illegible] (KWHR)	.656	.656	.656	.656	.656	.656	.656
[illegible] POWER (KWHR)	.647	.602	.602	.621	.560	.549	.563
[illegible] (KWHR)	.683	.687	.234	.237	.230	.236	.221
[illegible] (KWHR)	.062	.061	.671	.672	.671	.673	.671
[illegible] (KWHR)	.269	.246	.341	.332	.302	.309	.292
[illegible] (KWHR)	.286	.251	.349	.346	.345	.345	.338
[illegible] (KWHR)	85.4	86.9	94.9	96.9	94.9	97.2	91.2
[illegible] (KWHR)	85.6	86.7	90.3	89.7	89.6	90.2	89.2
[illegible] (KWHR)	131.0	111.6	134.3	126.6	126.4	127.6	125.6
[illegible] (KWHR)	116.9	133.5	143.6	147.6	142.2	142.2	139.2
FUEL FLOW (KWHR)	0.6	2.7	0.0	2.3	0.0	0.0	0.0
TURBINE SPEED (RPM)	52,90	5486.	53220	53150	52600	53040	52950
[illegible] POWER (HP)	447	332	455	456	457	456	458
CONDENSER (PSIG)	6.10	7.90	0.96	9.62	9.10	6.96	6.20
[illegible] PUMP (PSIG)	10.75	13.42	15.94	13.19	14.24	14.63	14.36
[illegible] PRESS (PSIG)	36.56	43.95	47.13	34.50	32.60	33.26	34.95
FEED PUMP (PSIG)	636.70	756.7.	694.70	654.70	644.70	634.70	676.70
[illegible] INLET (PSIG)	622.27	741.19	744.56	642.65	616.16	592.51	629.68
[illegible] (DEG F)	172	194	195	195	200	200	235
[illegible] (DEG F)	361	495	519	510	515	530	530
[illegible] (DEG F)	471	585	575	570	575	530	545
[illegible] (DEG F)	510	620	622	615	620	633	435
[illegible] (DEG F)	570	435	818	610	614	625	435
[illegible] (DEG F)	425	625	645	635	640	665	665
[illegible] (DEG F)	261	370	360	364	369	372	372
[illegible] (DEG F)	116	115	125	125	124	125	145
FEED PUMP TO (DEG F)	161	155	175	175	174	175	175
FEED PUMP OUT (DEG F)	180	190	195	195	195	205	235
[illegible] (DEG F)	79	81	45	90	45	85	90
[illegible] (DEG F)	87	87	95	130	105	105	135
[illegible] (DEG F)	365	465	475	471	460	461	455
[illegible] (DEG F)	90	85	85	45	90	96	98
[illegible] (KWHR)	0.	36481.	0.	36324.	0.	0.	0.
[illegible] (KWHR)	31560.	31746.	36694.	36639.	37461.	37[illegible]0.	35647.
[illegible] (KWHR)	6869.	63614.	66277.	65624.	66063.	[illegible]7324	65973.
[illegible] (KWHR)	6692.	62316.	66205.	65947.	65447.	65995.	65449.
PUMP EFFICIENCY (KW)	.158	.157	.182	.236	.234	.146	.157
PUMP EFF (% PWR)	.244	.113	.125	.115	.112	.113	.115
TURBINE EFF (KW)	.672	.622	.663	.745	.750	.687	.682
TURBINE EFF (% PWR)	.377	.311	.276	.371	.373	.351	.356
[illegible] (% PWR)	67.8	54.7	39.3	36.5	37.6	52.7	35.6
[illegible] EFF (KW)	.170	.127	.028	.175	.189	.116	.111
[illegible] EFF (% PWR)	.335	.347	.337	.341	.489	.467	.493
[illegible] EFFICIENCY	.762	.763	.685	.679	.680	.674	.674
[illegible] EFFICIENCY (%)	.656	.592	.718	.716	.709	.713	.707
[illegible] FEEDER	0.000	.004	0.000	.056	0.000	0.000	0.000
OVERALL EFFICIENCY	0.000	-0.035	0.000	-.012	0.000	0.000	0.000
[illegible] POWER (KWHR)	-.457	-.372	-.461	-.461	-.361	-.336	-.336

PEGGE 1.5 KW CRC R.MORRISON 5-21-75 CASE-1

TB EFF	REGEN EFF	ALT LOSS	COND EFF	MAS LOSS	REG EFFEC
0.62400E 00	0.39083E 00	0.18000E 00	0.90000E 00	0.10700E 00	0.85000E 0
VAP EFFEC	ECON EFFEC	DRV COND	DRV REG	DPL ALT	DPL REG
0.97500E 00	0.86000E 00	0.72000E-02	0.10500E 00	0.13300E 02	0.20000E 0
DPL VAP	DP THROT	P VAP OUT	T VAP OUT	P PUMP IN	DT SUBCOOL
0.13000E 02	0.50000E 01	0.62000E 03	0.12000E 04	0.37100E 01	0.0
PUMP EFF	WE/CV REG	GET KW	PARA KW	CRIT TEMP	LHV FUEL
0.10000E 01	0.60000E 00	0.10000E 01	0.50000E 00	0.60000E 03	0.18900E 05
HHV FUEL	EXCESS AIR	STG A/F RTO	T FLAME	CP GAS COLD	W
0.20120E 05	0.40000E 00	0.15000E 02	0.33000E 04	0.28100E 00	0.16750E 02
FLUID CODE	CPD RPM				
0.30000E 01	0.55000E 05				

STATE POINT	PRESS(PSIA)	TEMP(F)	ENTHALPY(BTU/LB)
VAP OUT	0.62000E 03	0.82400E 03	0.31532E 03
TB IN	0.61500E 03	0.82433E 03	0.31532E 03
REGEN VAP IN	0.38222E 01	0.64889E 03	0.24112E 03
COND IN	0.37172E 01	0.24980E 03	0.65490E 02
PUMP IN	0.37100E 01	0.15490E 03	-0.13297E 03
ALT IN	0.66910E 03	0.16746E 03	-0.12627E 03
REGEN LIQ IN	0.63560E 03	0.18213E 03	-0.11994E 03
REGEN LIQ OUT	0.63380E 03	0.55949E 03	0.89141E 02
ECON OUT	0.63380E 03	0.52332E 03	0.62958E 02
VAP IN	0.63380E 03	0.55555E 03	0.86952E 02

CRU EFF	MASS FLOW	Q RELEASED	Q ASSORBED	Q REJECTED	SYSTEM EFF
0.42619E 00	0.33172E-01	0.15084E 05	0.31125E 05	0.23700E 05	0.14592E 0
FUEL FLOW LB/HR		PUMP EFF			
0.17433E 01		0.35000E 00			

ECON. IN TEMP. (F) = 0.6241072E 03 ECON. OUT TEMP. (F) = 0.26412996E 03

1973 Oct 2

Figure VII-8 Original Design Point Performance

	(1) Set 1	(2) Set 2	(3) Design Pt.
Heater efficiency	.88	.82 - .84	.88
Regenerator effectiveness	.80	.69 - .74	.855
Pitot pump efficiency	.28	.124 - .165	.35
Turbine Efficiency	.31	(1) (2) (3)	.62
Heat Shunts	Not considered ?	0	

The quality of the data on Set 2 exceeds that on Set 1. Nonetheless, it appears that heater and regenerator performance is down slightly. This may be due to manufacturing QC for the heater and either core-to-housing fit and/or slightly undersize for the regenerator. These can be controlled at the design level and do not represent an R & D effort.

The expectation for 23% pitot pump efficiency for Set 2 was based upon the data obtained for Set 1. This is shown in Figure VII 9 along with a plot of Set 2 pitot pump power consumption. The Set 2 pitot probe was designed to be more cost effective than that of Set 1. These differences are elaborated upon in the improvements section.

The turbine performance of Set 1 was low primarily due to the separation distance between the nozzles. The efficiency of the turbine of Set 2 was investigated in several ways. The data of Tables VII B and VII C shows turbine efficiencies based on shaft power (calculated from measured output power + rectifier and generator losses + parasitic losses + bearing and rotor windage losses) and enthalpy (based on measured turbine inlet temperature and pressure). These range from 27.6 to 59.6% with the lower efficiencies occurring at higher than design turbine back pressure.

Figure VII 10 is a recording of Run 030 from which the slope of the accelerating and decelerating portions of turbine speed trace was used to determine shaft power and predicted turbine efficiency. This data is summarized in Table VII D from which the following is evident:

Measured $\dot{m}$ and predicted $\dot{m}$ CP 25 agree

Calculated shaft loss and that based on output power generally agree

Calculated ηt based on acceleration/deceleration analysis agrees with the average ηt calculated from output power considering that flow to the turbine is cycling from 5 to 2 nozzles to maintain turbine speed at 55 ± 1 Krpm. Thus the turbine appears to be operating close to predicted though the speed trace scale makes quality analysis difficult.

Turbine efficiency depends upon inlet conditions, exit conditions and degree of admission. As shown in Table VII D, the partial admission effect is significant (2 noz vs. 5 noz ηt).

A further analysis was performed to determine if heat loss in the nozzle housing was contributing to low power output. Figure VII-11 is a sketch illustrating possible heat flow paths. The following data points were selected because they represent a wide range of turbine inlet and outlet conditions

Run	Conditions
030-1	Hotwell liquid level below turbine housing Design point turbine outlet conditions

(N = 54.55 KRPM, ρ = 53.5 lb/ft^3, D_{pump} = 1.38, D_{throat} = .030)

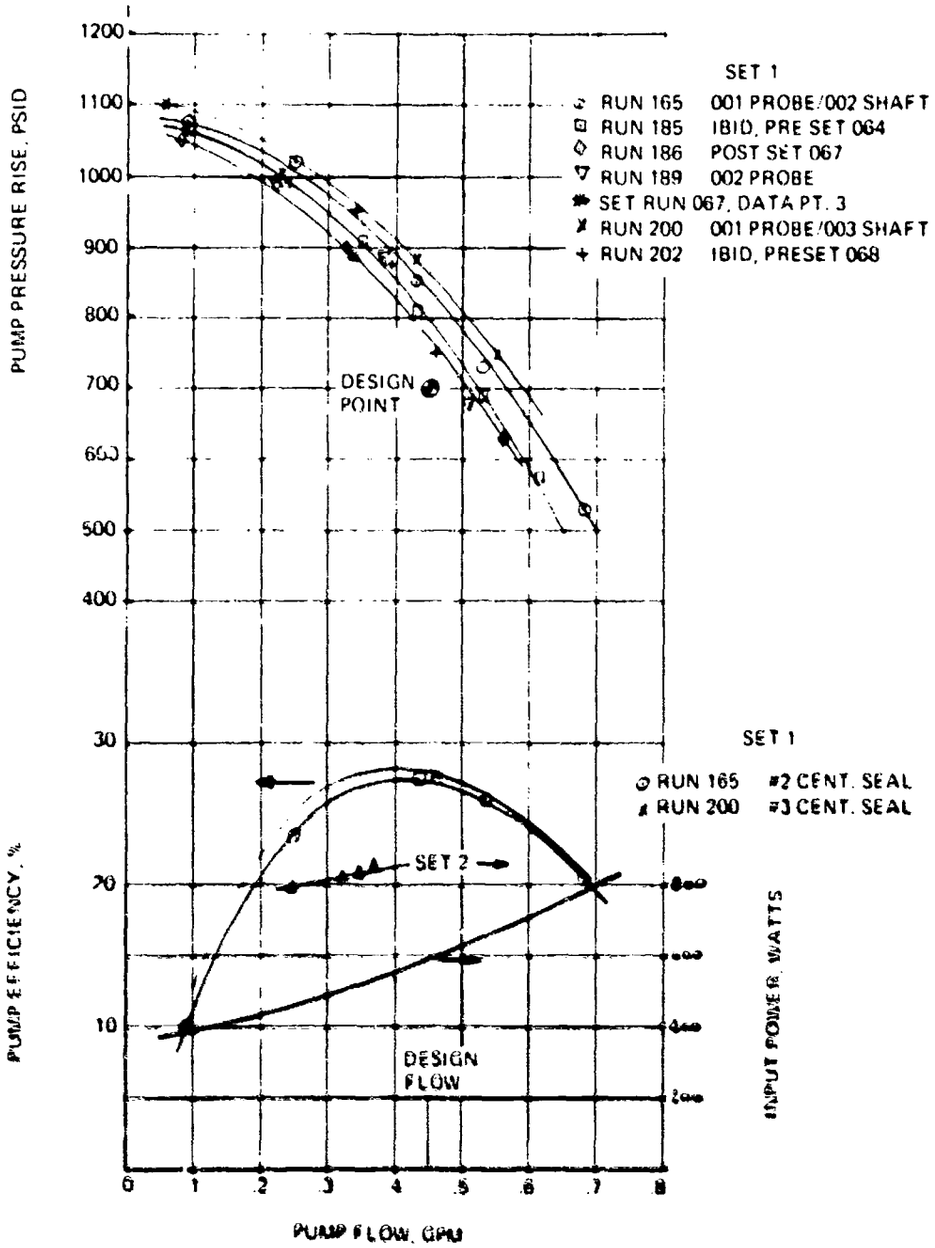

Figure VII-9 Pump Output & Performance Characteristics

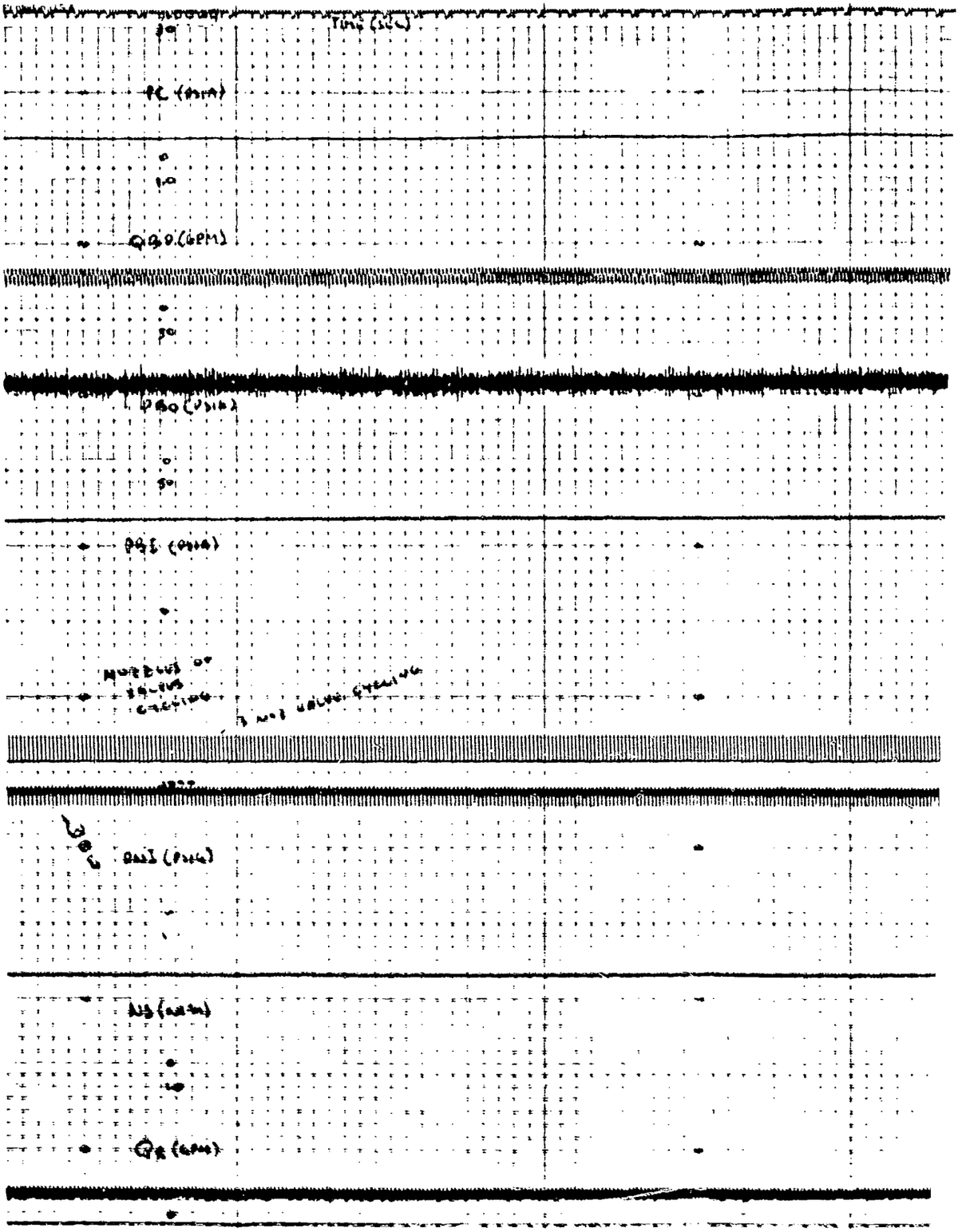
Time (sec)
PC (psia)
Q80 (GPM)
P80 (psia)
PSI (psia)
NOZZLE OF
SPLITS
CRACKING
NOT VALVE CHANGE
PSI (psia)
NS (psia)
QR (GPM)

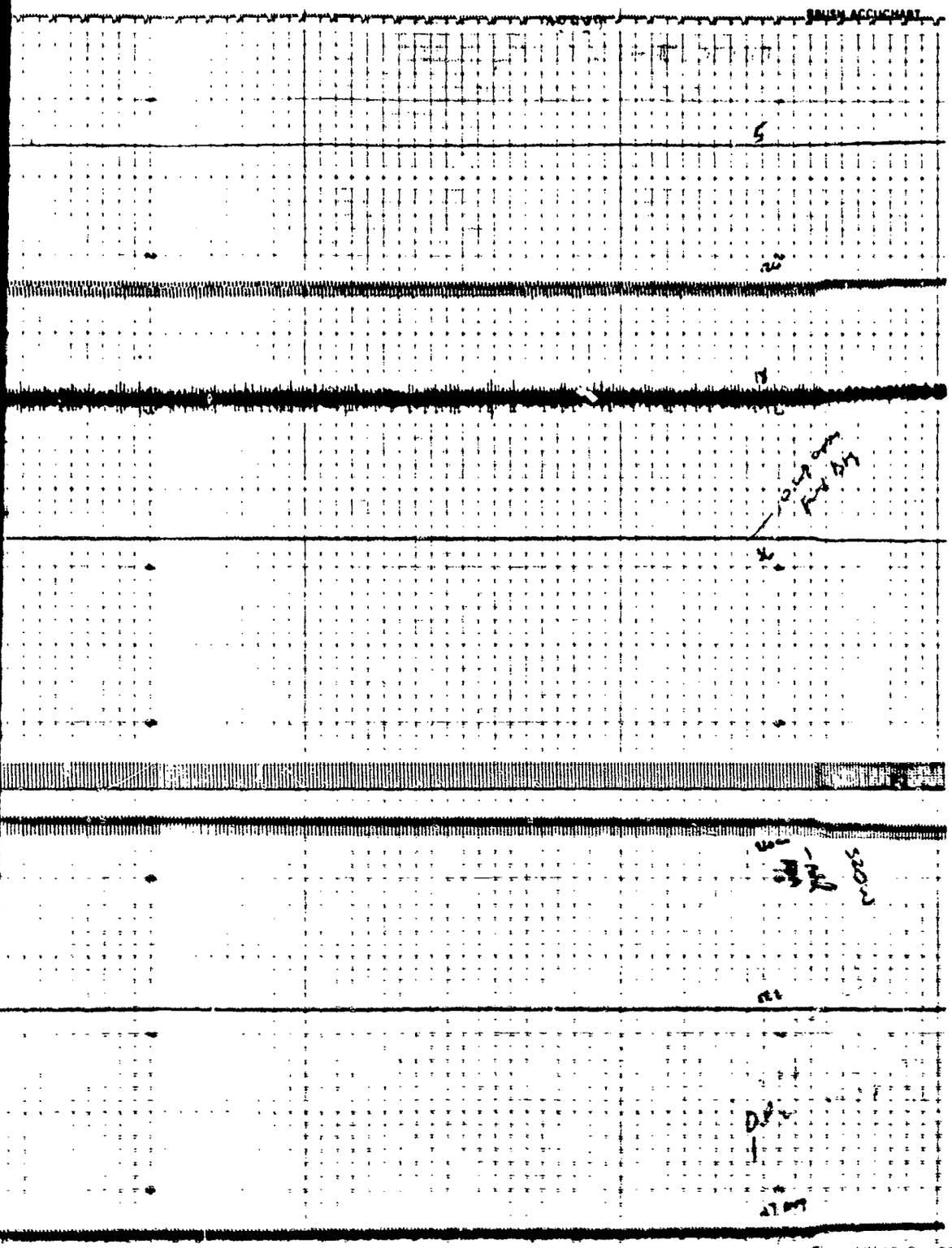

Page 88

Figure VII-10 Run 030 Recording

VDC
THD(°F)
TEQ(°F)
TVC(°F)
TWI(°F)
TWX(°F)
TVC(°F)
A = 10
~20 ft

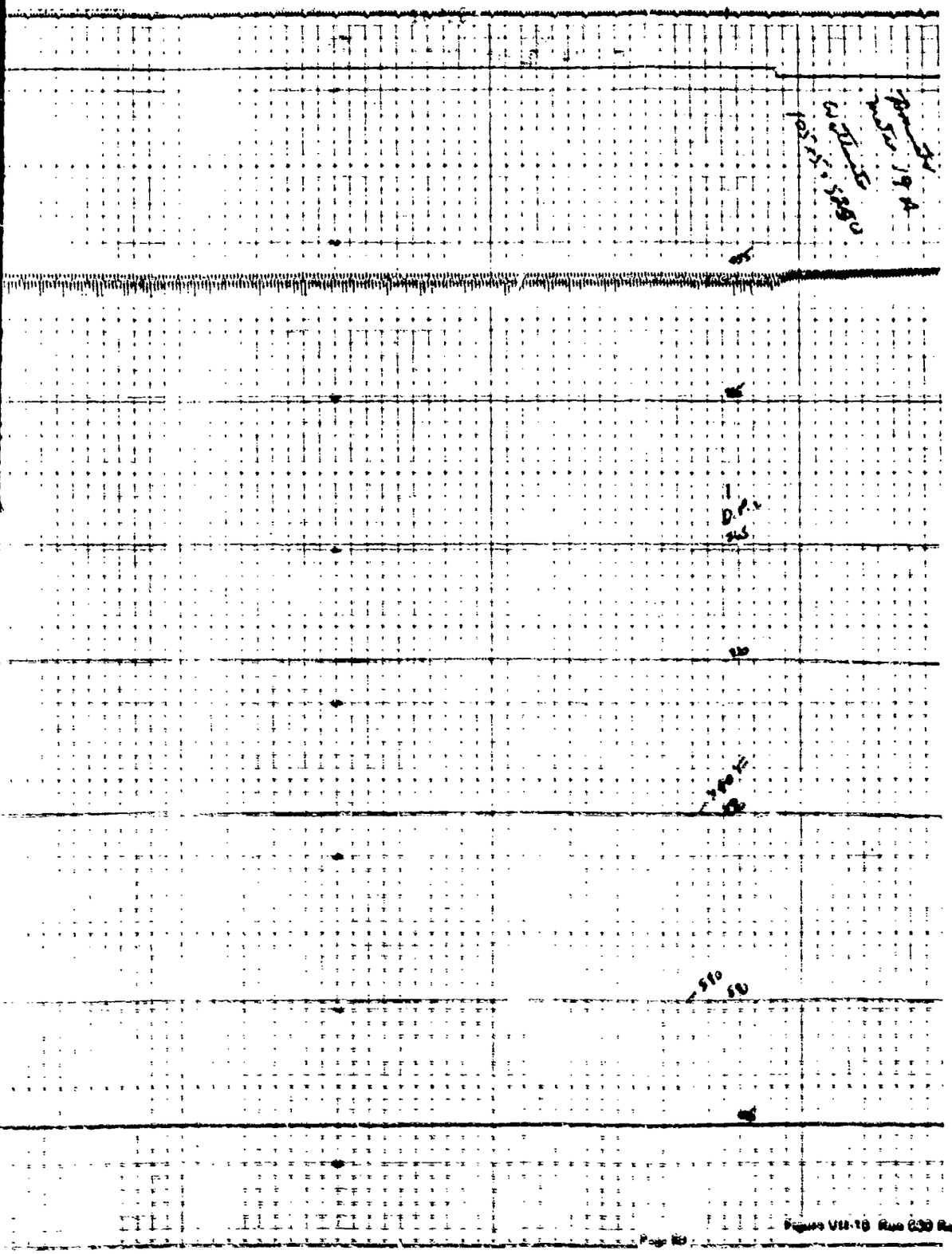

Figure VIII-19 Run 630 Recording Cont.)

Table VII D Turbine Performance

Data Point	030 DP1	030 DP2	029 DP1	029 DP2	028 DP1	028 DP2
TNI	840	840	830	774	812	812
(I) Accel	1.72	1.358	1.661	.455	1.137	943
(I) Decel	94	1.137	1.115	1.316	1.2	1.13
$I_A + I_D$	2.66	2.495	2.776	1.771	2.337	2.074
Pin (5)	994	924	954	904	884	864
Pin (2)	959	944	1004	874	904	884
$\dot{m}$ (5) (E19)	.0342	.0318	.03276	.03194	03076	03007
$\dot{m}$ (2) (E19)	.0147	.01443	.01541	.01372	01397	01367
(m) av (E19)	0244	0231	.0242	.02283	.0224	0219
(m) meas.	.0284	0292		-- -		0363
Shaft loss w	1558	1680	2010	1301	1700	1496
Shaft loss (*) w	1600	1515	1700	1819	1864	1863
Pex psia	3.6	5.0	2.7	4.9	3.1	3.8
$HP_{(5)}$ meas.	3.60	3.44	4.15	2.14	3.25	2.82
$HP_{(5)}$ E19	3.61	3.18	3.53	2.93	3.17	3.03
$HP_{(2)}$ meas	1.26	1.26	1.710	676	1.25	1.03
$HP_{(2)}$ E19	1.17	1.05	1.30	877	1.12	1.03
η t (5) E19	579	583	.570	581	574	581
η t (2) E19	44	.423	45	404	445	435
Avg Pred (*)	572	49	.385	455	479	50

NOTES

(*) From Table 7.2

(5) Indicate 5 nozzles active

(2) Indicate 2 nozzles active

(E19) is computer performance program designation

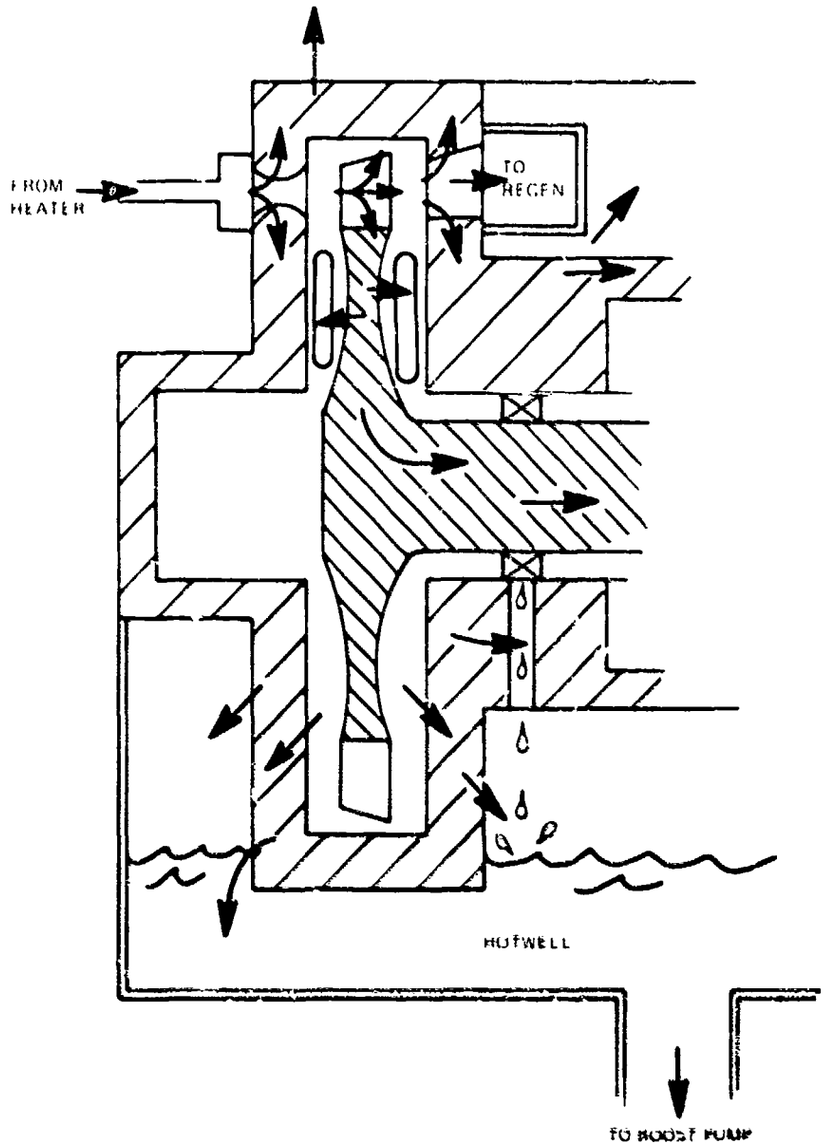

Figure VII 11 Turbine Heat Flow Model

028 2	Hotwell liquid level contacting turbine housing Design point turbine outlet conditions
16 5 & 16 7	Hotwell liquid level = 0, flow through into modified hotwell (holding tank attached to bottom of hotwell) Design point turbine inlet condition

The objective of the analysis was to determine turbine efficiency using test data and considering heat losses, to determine why the regenerator vapor inlet temperature is 30 - 60°F lower than it should be and why the different hotwell liquid levels did not manifest in a significant change in output power. It is worth noting that Set 2 has produced up to 477 watts net output power, but for all the tests on the average, net output power is close to zero.

Three heat transfer analyses were conducted: the wet, partially dry, and dry cases to simulate the following conditions respectively: (1) hotwell liquid level contacting the nozzle plate, (2) hotwell liquid level below the nozzle plate with the bearing drainage flowing down the face of the plate and (3) no liquid in the hotwell with the bearing drainage not contacting the face of the plate. Note that lab experiments imply the bearing drainage flows down the face of the plate. Table VII E is a summary of this analysis for Run 030 1 which indicates that the wet case has approximately twice the heat loss as the dry case, and the predominant loss is the heat flow to the wheel. Table VII F uses these heat flows and applies them to the various tests to determine which case best represents each test, how the predicted regenerator vapor inlet temperature (TRVI) compares to that measured and what the real turbine efficiency is factoring in heat losses. The asterisks in Table VII F indicate the cases which typify each test run by choosing the case that most clearly matches measured TRVI. For example, the partially dry case best describes Run 030 1 since the calculated TRVI is only 12°F lower than that measured. The heat loss at the inlet of the turbine is small but is a factor. The corresponding turbine efficiencies compare well with the data of Tables VII B, C, and D. The turbine efficiency of Run 016 is low due to the very high back pressure. As the design point is approached, the turbine efficiency becomes higher and approaches that of Run 030 1.

From this, a prediction is made of the expected output power with the correct design turbine conditions and what may be expected if the performance of certain components is improved. For this analyses, it is assumed that design point conditions are achieved at the inlet and exit of the turbine (by reducing non condensible leaks into the low pressure side of the system) and that heat losses can be reduced to the dry case. Additionally, the generator and rectifier losses are taken as the worst possible case (would be lower using TRW data, reference Figure VII 12) and parasitics are taken as the highest measured (range ~ 466 -605 watts). It is further assumed that the reduction in heat loss in the wheel only improves shaft power indirectly through greater regeneration and the ability of the system to support greater mass flow.

Thus, the results of this analysis, presented in Table VII G, are conservative and imply the following:

With a 58 psi, 650 watts is the maximum power that can be expected out of Set 2 at design point conditions.

The effect of heat loss is not significant.

The pilot pump is the greatest contributor to low output power.

Table VII-E Heat Loss Summary (Run 030-1)

	Wet	Partially Dry	Dry
Inlet Gas → Inlet Hsg. (Q_L in)	509	398	342
Exh. Gas → Exh. Hsg. (Q_L exh)	119	71	38
Hot Gas → Wheel (Q_L)	2397	1158	308
Disc Friction (Df)	670	670	670
Pumping (P)	125	125	125
Total Loss from Exhaust	3820 B/hr	2422 B/hr	1484 B/hr

Run 030 conditions

$\dot{m}$ = 77.3 lb/hr
TNI = 840°F
PNI = 974 psia
Pc = 3.6 - 4.0 psia

Scavenging Loss(s) - 410 B/hr

Table VII-F Effect of Heat Loss on Performance
(Prediction of Regenerator Vapor Tin and η_T)

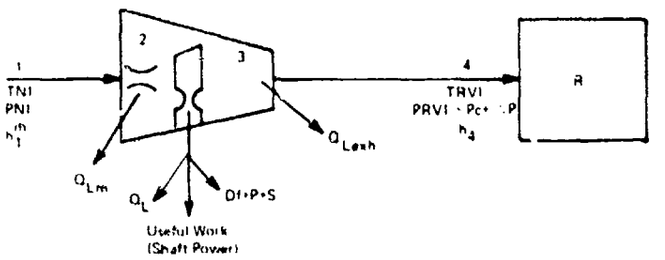

HEAT BALANCE $\dot{m}h_1 \quad Q_{Lm} \quad Q_L \quad D_f \quad P \quad S \quad SP = \dot{m}h_3 \qquad h_2 = h_1 - \frac{Q_{Lm}}{\dot{m}} \qquad h_4 = h_3 - \frac{Q_{Lexh}}{\dot{m}}$

RESULTS

	RUN	CASE	H_2	h_1	h_3	h_4	T_1	T_2	T_3	T_4	ΔT_{12}	ΔT_4 TRVI	η_T
S	030 1	WET	309	302	185	184	840	832	525	523	8	59	
		P DRY	309	304	203	202	840	835	573	570	5	12	583
		DRY	309	305	215	214	840	836	599	595	4	+13	
S	028 2	WET	293	288	200	199	810	803	587	584	-7	1	503
		P DRY	293	289	209	208	810		583	580		+15	499
M	165	P DRY	307	304	242	241	810	805	650	647	5	+7	38
		DRY	307	306	249	248	810	806	665	662	4	+22	
M	167	WET	321	317	245	244	835	826	65[illegible]	655	8	10	354
		P DRY	321	318	257	256	835	828	622	6[illegible]9	7	+14	354
		DRY	321	319	264	263	835	830	691	686	5	+23	

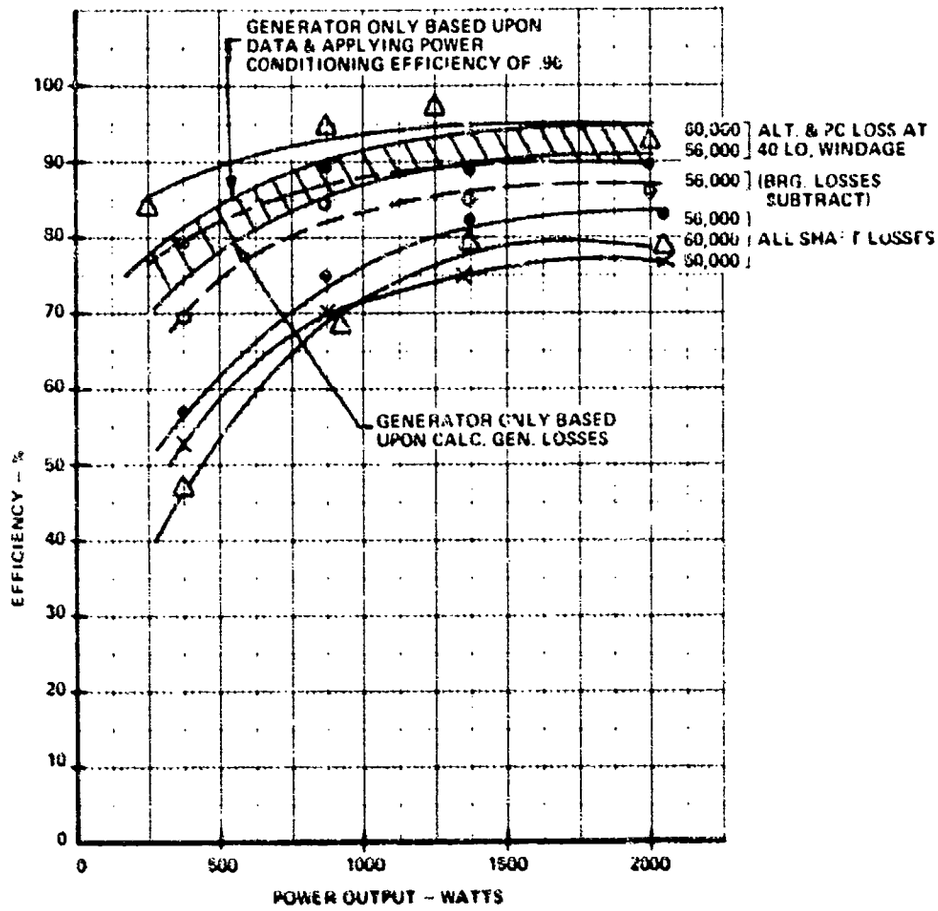

Figure VII-12 Alternator and Power Conditioning System Efficiency

Table VII-G Predicted Performance

Run 030-1 . Partial Adm. losses & partial fire rate
@ 120 lb/hr & ηt - 58

	120 lb/hr ηt - 58	E_R - .85 ηpp - 35	ηH - 88
Shaft Power, w	2470	3017	3179
Pump	900	496	496
	1570	2521	2683
- (B+W)	65	65	65
	1505	2456	2618
G & R	286 (.81)	422 (.83)	450 (.83)
	1219	2034	2168
Parasitics	600	600	600
	619 w	1434 w	1568 w

SUMMARY

Run	Comments	η_t - .58	Kilowatts output Ht. Loss	Ht. Loss $\div E_R$	Ht. Loss $\div E_R \eta pp$	Ht. Loss $\div E_R \eta pp \eta H$
030-1	Partial Adm & fire rate 120 lb hr & ηt - 58	62			1.43	1.57
028-2	Partial Adm Low ηt	.58	61	.58	1.21	1.32
16-5	High back press	.65		83	1.36	1.47
15-7	High back press	35	38	60	1.1	1.2

Reducing the heat loss and increasing the performance of the regenerator, pilot pump and heater will bring output power to 1.2 – 1.6 KW at a 10.4 – 13.9% thermal efficiency.

Higher output power may be obtained by more fuel through-put.

SECTION VIII

IMPROVEMENTS

VIII. IMPROVEMENTS

STARTUP

Automatic startup was not achieved on Set 2. This was due to two factors:

1) Too high a degree of flow from the start pump which precluded enough temperature rise in the fluid prior to pitot pump takeover.

2) Possible takeover by the pitot pump at too low a turbine speed and/or at too low a working fluid temperature.

These conditions caused the system to reach a bootstrap equilibrium point at a temperature below the critical point, at a flow above the design point and at a speed below rated.

The start pump is oversized and needs to have its output reduced to effect a bootstrap start that is compatible with the fluid heat input and turbine/pitot pump dynamics.

OUTPUT POWER AND EFFICIENCY

As the discussion in Section VII indicates, these factors relate to several components.

TURBINE: The turbine appears to be operating close to design though low by several points. Increasing the lap ratio would allow more optimum entry of the gases into the blade passage. Design point efficiency of this same turbine with a higher lap ratio has been achieved on the Remcom program.

REGENERATOR: On Set 1 the regenerator showed better performance than on Set 2. The construction is that of a core slipped into a housing. The implication is that there may be a significant amount of side leakage around the core on the Set 2 regenerator that did not exist on Set 1. Tighter dimensional control, investigation of thermal fatigue/expansion characteristics and improved design quality should increase the effectiveness to the design value.

HEATER: The heater efficiency is also lower than that of Set 1 and a few percentage points lower than design. Fundamentally, a fin tube heater would be more reproducible than the present B-B design. The design point efficiency in a fin-tube design is achievable in the same volume and at reduced weight in the B-B type.

PARASITICS: The efficiency of the constant frequency motor reduced parasitics by a net of 50 watts factoring in the increased power of the quieter constant frequency gearbox. Further reduction can be achieved particularly if a single variable speed motor is used to support all parasitics rather than the present variable and constant speed motors each driving selected parasitic devices.

EFFICIENCY: In summarizing the efficiency that can be expected with another generation of hardware, from Section VII it is seen that improvements in heat loss control, pitot pump efficiency, regenerator effectiveness and heater efficiency will yield 1.2 – 1.6 KW at 10.4 – 13.9% thermal efficiency. Further improvement may also be made by increasing turbine lap ratio and reducing parasitic losses.

PITOT PUMP: The original prediction of pitot pump performance was 35%, that obtained on Set

1 was 28% and for Set 2 was about 15–16%. Figure VIII 1 illustrates the differences between the Set 1 and Set 2 probes. The probe for Set 2 was constructed in such a way as to be less expensive to fabricate. In so doing, several characteristics, such as the leading edge, X sectional symmetry, and inlet geometry of the nose changed. The housing cavity is also different. It is hypothesized that probe drag, recirculation and/or sidewall effects of the housing are inducing excessive losses.

An investigation was made to determine if the theoretical probe drag losses are consistent with achieving the original efficiency predictions which were obtained using scaling criteria. Table VIII A is a summary of measured power, predicted power and drag losses as a function of drag coefficient. Literature for streamline struts and foils indicate a $C_D = .009$ is common which results in a power loss of 63 w. Adding extra drag for the nose ($C_D = .1$ considering as a scoop) increases the power loss to 188 w including the centrifugal seal loss. This does not include recirculation, sidewall effects and internal inlet drag and is less than a 35% pump would permit (a total power of 215 w). However, the proximity of sidewalls can push C_D to .1 and in this case drag ≈ 680 w which is comparable to that measured on Set 2.

This discussion indicates that there are geometric explanations for the higher Set 2 pitot pump power loss. To reduce the losses to that originally predicted is realistic but will require experimentation with the variables to arrive at the desired pump efficiency.

NOISE While significant improvement was made in gearbox emitted noise, the CRU is still the major noise producer. Although between Set 1 and Set 2 the noise level was reduced (stiffening the hotwell), it is not sufficiently low to meet the noiseless 100 meter requirement. The reason is largely due to all the resonances of the hotwell not being eliminated. Thus, the hotwell responds to the rotational disturbance of the turbine assembly. Further improvement could be made by reducing the input disturbance. This would require improving the balance of the rotating assembly by balancing in the operating speed region. Sundstrand's Remcom power plant is an example of a very quiet machine. It is heavy but nonetheless attests to the solution approach of stiffening the hotwell as the method to preclude responding to the one-per rev of the turbine rotating assembly. Minimal weight increase would be incurred by using ribs, better mount arrangement, elimination of flats on the hotwell which easily deflect, and a non cantilevered mounted turbine rotating assembly to eliminate its own self-induced vibration.

BOOST PUMP Between Set 1 and Set 2 an improved boost pump was developed, however, there are circumstances where boiling occurs as the condenser overcools the condensate during transient periods. Even the Set 2 boost pump will cavitate in these circumstances. Sundstrand has developed for Remcom a boost pump capable of handling boiling CP 25. This is a nominal 10,000 rpm centrifugal pump which has to date exceeded 6000 hours of operation and demonstrated its integrity. This pump is ideally suited to the MERDC 1.5 KW unit since it is designed for comparable flows and pressures.

OTHER Other areas of improvement were presented in the Set 1 Final Report, ATR 1182, dated 6 24 74. Many of these were not incorporated into Set 2 and remain valid.

CONTROLS The controllers used for Units 1 and 2 were designed to meet the requirements of the specification including use of preferred parts. To meet the circuit requirements over the specified temperature range and environmental conditions, it is not necessary to use the preferred parts of the specification.

The following discussion of a simplified controller centers on circuits that were chosen to reduce

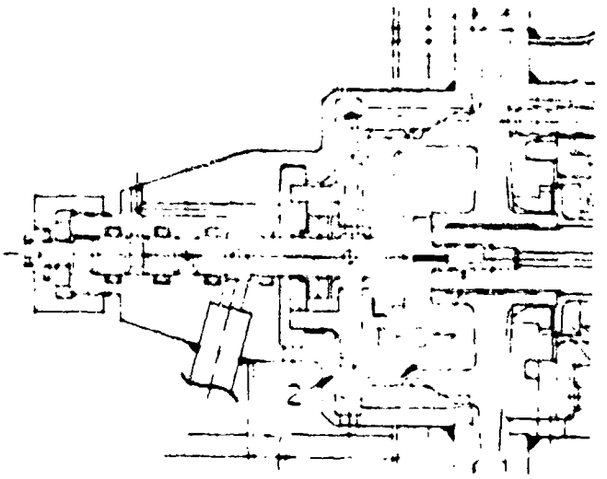

MERDC UNIT 1
EP 2559 1001

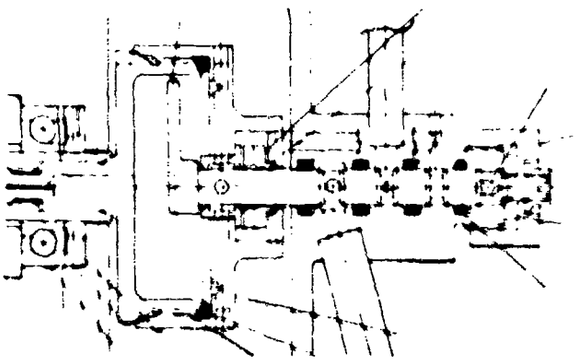

MERDC UNIT 2
EP 2559 5969

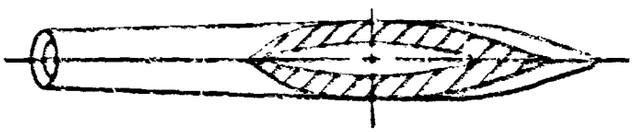

MERDC
EP2559 1148
HAND FINISHED &
POLISHED WITH ROUND
LEADING EDGE
t = 070 ± 001
e = 285 ± 008

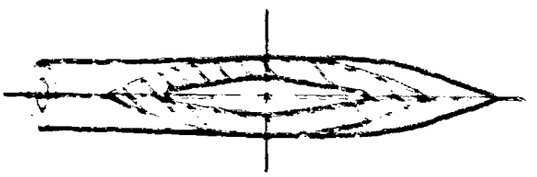

MERDC
EP 2579 5969
t = 070 ± 001
e = 306 ± 008

Figure VIII 1 Set 1 and Set 2 Probes

Table VII A Pitot Pump Characteristics

	MERDC EP2559 1148 (UNIT 1)	MERDC EP2559 5969 (UNIT 2)
MEASURED EFFICIENCY (%)	28	15.6
Power (w)	470	840
Hyd. work (w)	130	130
P Hyd. wk (w)	340	710
Cent. Seal Est. (w)	32	32
Drag + Recirc. Losses (w)	308	678
PREDICTED EFFICIENCY (%)	35	
Power (w)	377* @ η SYS = 10%	
Hyd work (w)	130	
P Hyd wk (w)	247	
Cent Seal Est. (w)	32	
Drag + Recirc. Losses (w)	215	
PROBE PREDICTIONS		
Vel Range (ft/sec)	60 300	
N_R Range	2.6×10^5	9.2×10^6
Cent. Seal Loss (w)	32	32
Drag @ C_D = .009 (w)		63
@ C_D = .060 (w)		410
@ C_D = .100 (w)		680
@ C_D = .009 + .03 Nose (w)		100
@ C_D = .009 + .1 Nose (w)		188

*Proposal Prediction = 330w

the overall parts count and meet the operational requirements. They are suggested circuits and have not been built and tested. In addition, they do not always use the military preferred parts list since this list lags the state of the art and, therefore, its use may induce less than ideal design.

The controller block diagram is shown in Figure VIII 2.

The auxiliary regulator can use a precision I.C. regulator instead of zener diode and op amps. The output stage can remain the same. The triangle generator output could be shared by both the auxiliary and main regulators.

The main alternator regulator uses an I.C. regulator for error amplification and reference voltage source. A comparator sums the output of the regulator and a ramp generator to produce a PWM signal to drive the field. The field driver circuit can remain the same.

The current limit circuit uses an F.E.T. as a variable resistance to lower the reference voltage coming from the voltage adjust pot. The current limit approximates a constant power slope.

The new regulator circuit as shown in Figures VIII 3 and VIII-4 has 35 parts compared to the previous design of 68 parts.

The proposed temperature regulator circuit uses the same block diagram approach to the control loop as the existing circuit. If deviation from the preferred parts list is allowed, Cmos and optical isolators can be used, simplifying the VCO and one shot circuitry (Figure VIII 5). The input amplifier will remain the same, an I.C. instrument amplifier. The transistor output stage can be simplified if Darlington transistors are used.

Three approaches to the control loop can be taken. A bang bang loop would be the fastest and simplest circuit. Response to temperature changes would be immediate and high accuracy can be achieved. A bang bang loop may cause thermal stressing of the fluid.

A second method which does not cause thermal stressing is a linear proportional loop. In order to make this loop stable, long time constants would be required which would also make it a slow loop. During load application, temperature undershoot would occur and during load removal, overshoot would occur.

A third method would use a linear proportional loop with load compensation. Alternator load would be sensed, and load change would be inserted into the heater loop to speed up the response.

Of the above methods, the first one would save the most parts and the third one the least. The first method would save 30 parts, the second approximately 20 parts and the third approximately 15 parts. Analysis and experimentation would be necessary to identify the optimum trade off.

With Cmos circuitry used extensively in this design, the +5 volt power supply will not be needed. The +15 and -15 v could be provided by pre packaged power supplies. The present design uses 42 parts for the three power supplies. This would be replaced by two power supply modules.

The battery charger will remain the same. The way it is attached to the battery is shown in Figure VIII 6.

Due to the present method of starting the turbine, the controller does not need any sequencing or

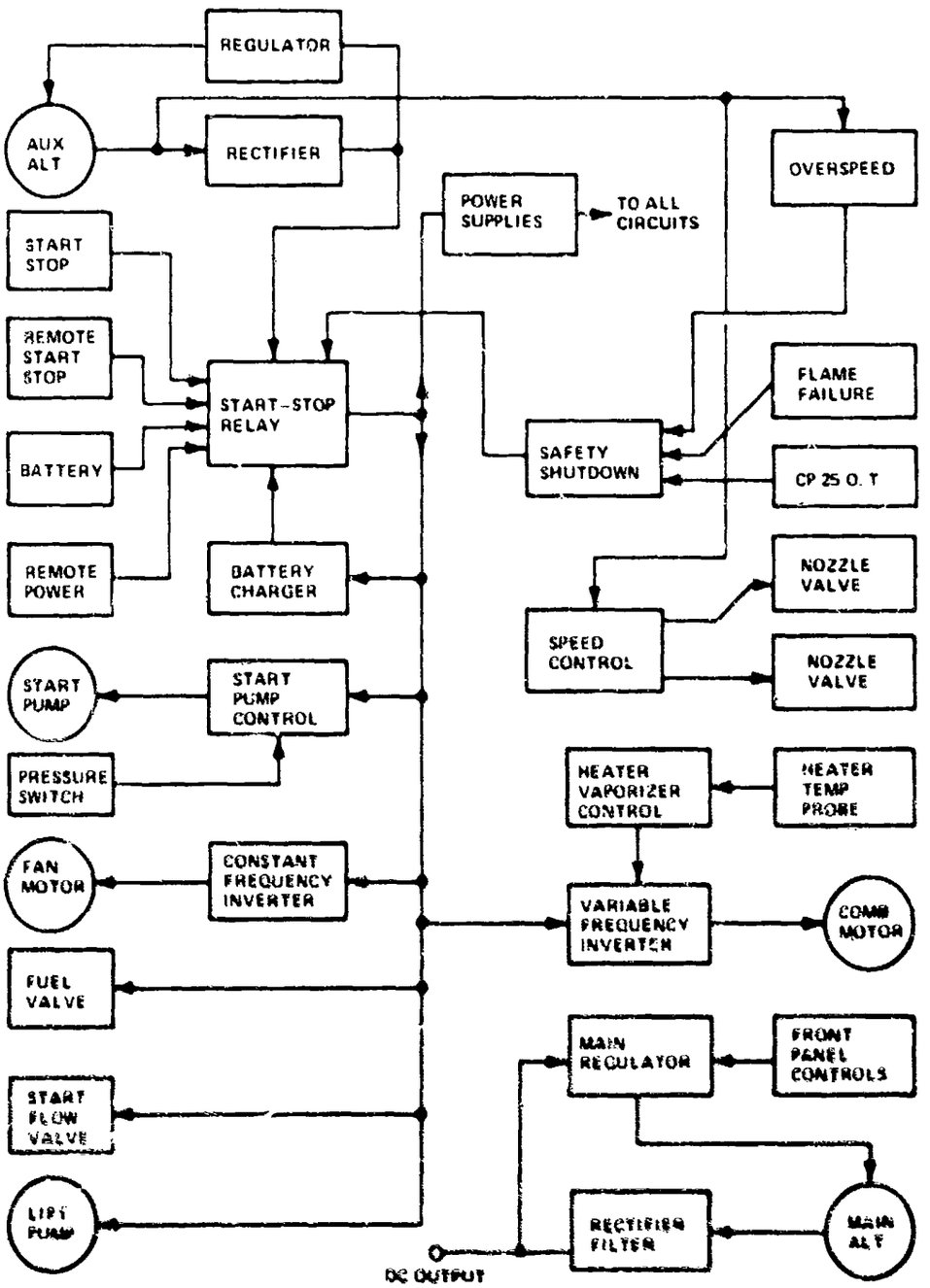

Figure VIII-2 MERDC Controller Block Diagram

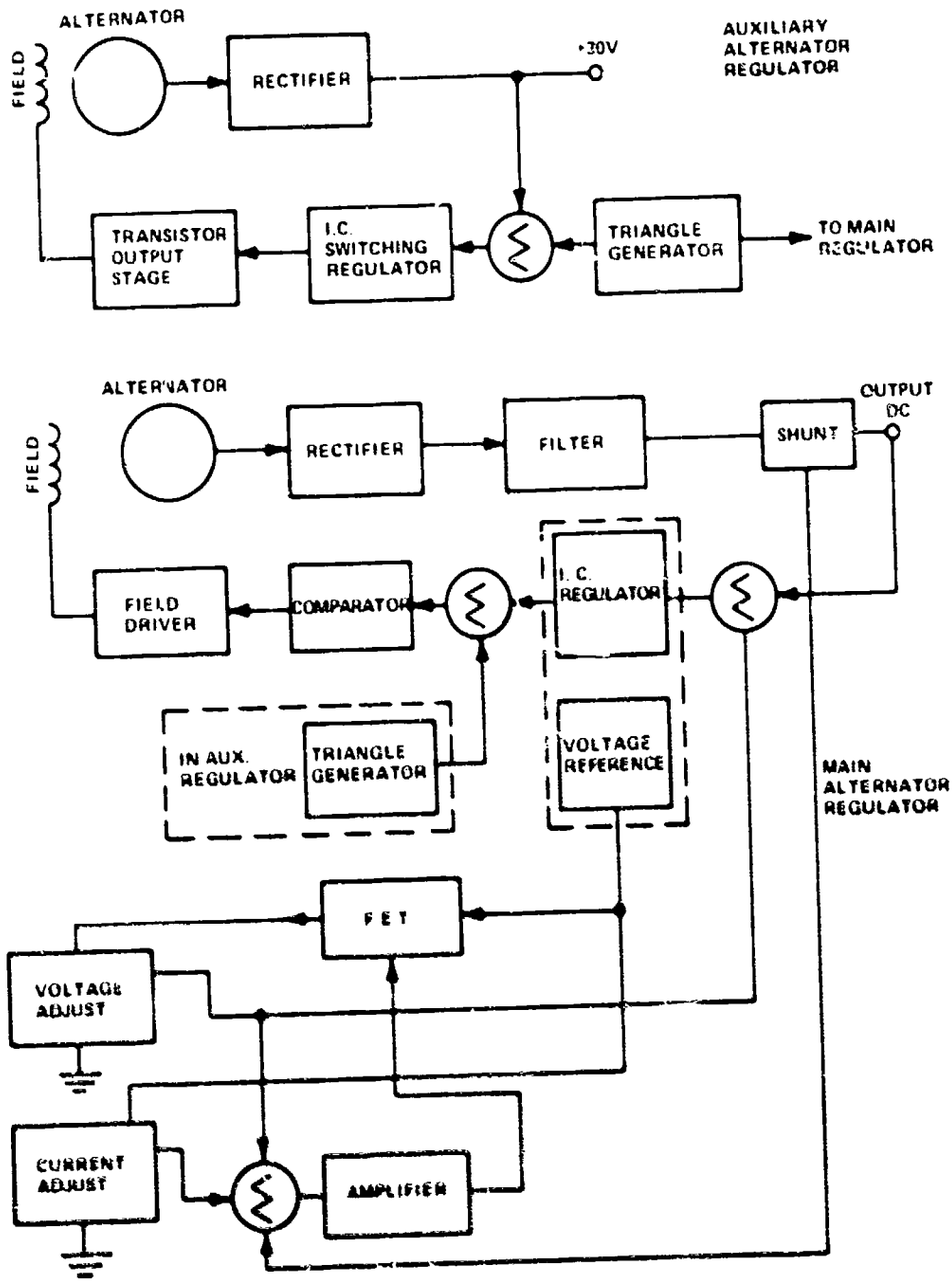

Figure VIII-3 Main & Aux Alternator Regulator Block Diagram

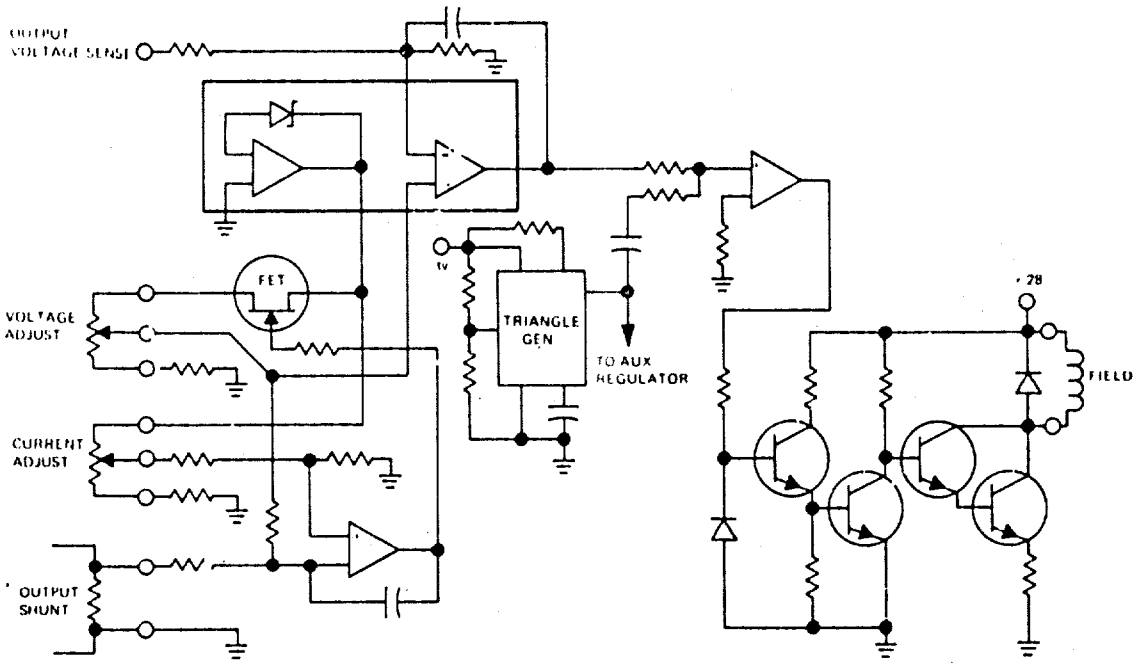

Figure VIII-4 Preliminary Schematic Main Alternator Regulator

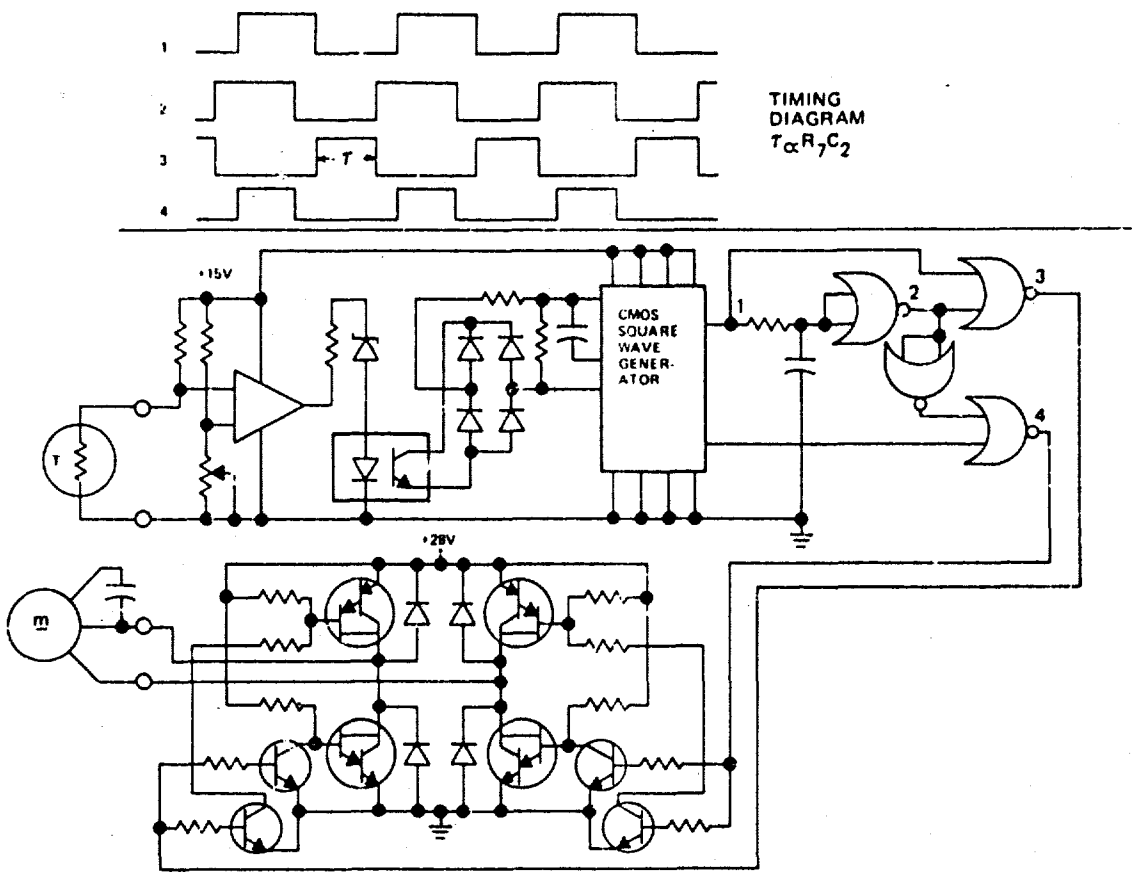

Figure VIII-5 Prelim. Schematic Temp. Reg. Circuit

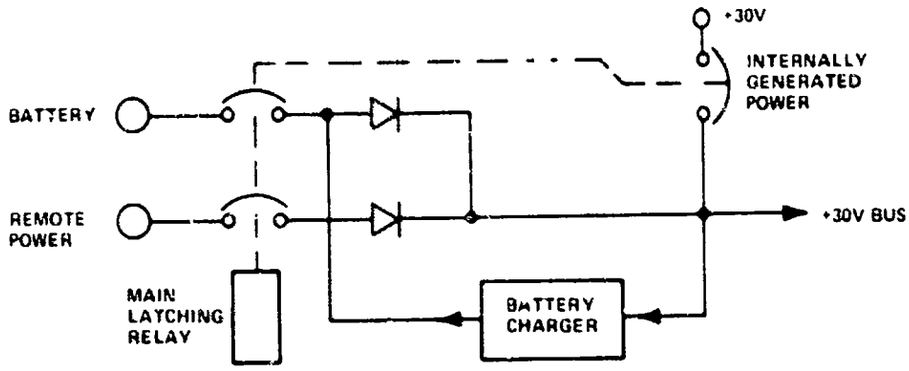

Figure VIII-6 Battery Charge Block Diagram

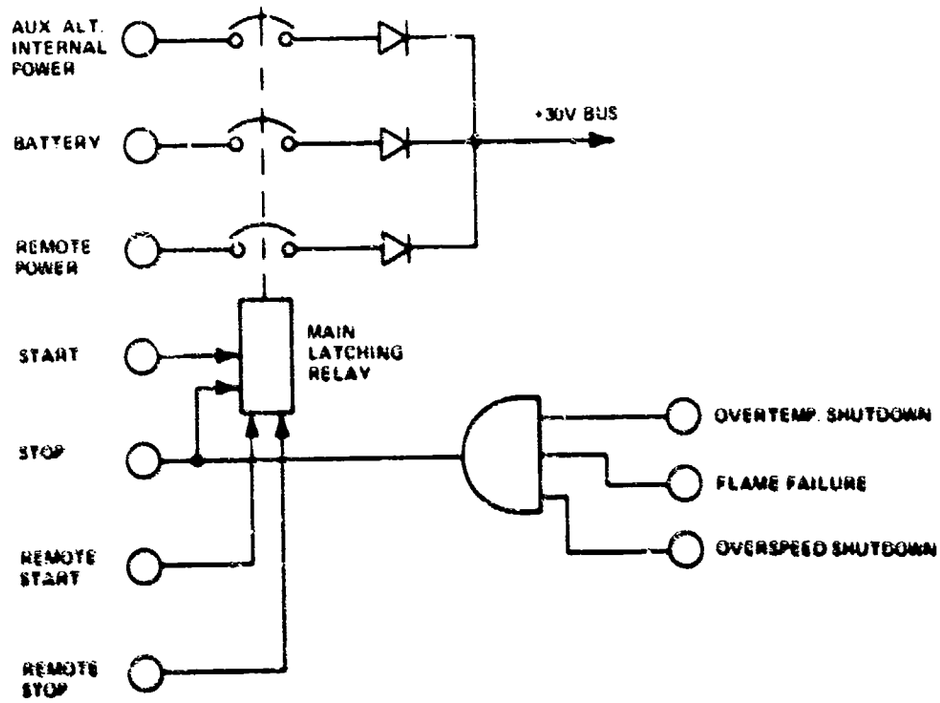

Figure VIII-7 Start - Stop Logic Diagram

time delays. One main latching circuit can control all power coming into the controller. This would consist of two power relays that have contact ratings compatible with the start pump and fan motor current requirements. The logic diagram is shown in Figure VIII 7.

The speed control and overspeed safety circuit will remain the same except that Cmos will replace the TTL logic.

The constant frequency inverter can remain a packaged purchased inverter or incorporated into the controls depending upon the cost trade-off.

The start pump control circuit which allows for starting the pump motor will remain the same.

The main alternator rectifier filter circuit will also remain the same as the current Unit 2 controller.

REPACKAGING CONCEPT

The existing 2' x 2' x 2' package can be developed into a viable highly efficient power supply, however it is not the optimum package. Evidence from development data to date includes.

Noise emitted by condenser fan.

May not need both constant and variable frequency mechanical circuits. In fact, it is desirable to have condenser coolant fan speed follow working fluid flow rather than run at constant speed.

For increased operating margin, the boost pump should have more liquid head

The burner operates better extended away from the heater rather than buried.

A repackaged unit would be 3.5' x 1.5' x 1.5' and is shown conceptually in Figure VIII 8. There is no volume or weight increase (currently 8 ft^3 and 210 pounds). Further development of a bootstrap start, simplified controls and simplified accessory drive should reduce the parts count, weight, and cost. The repackaging effort will reduce noise and improve mechanical operation.

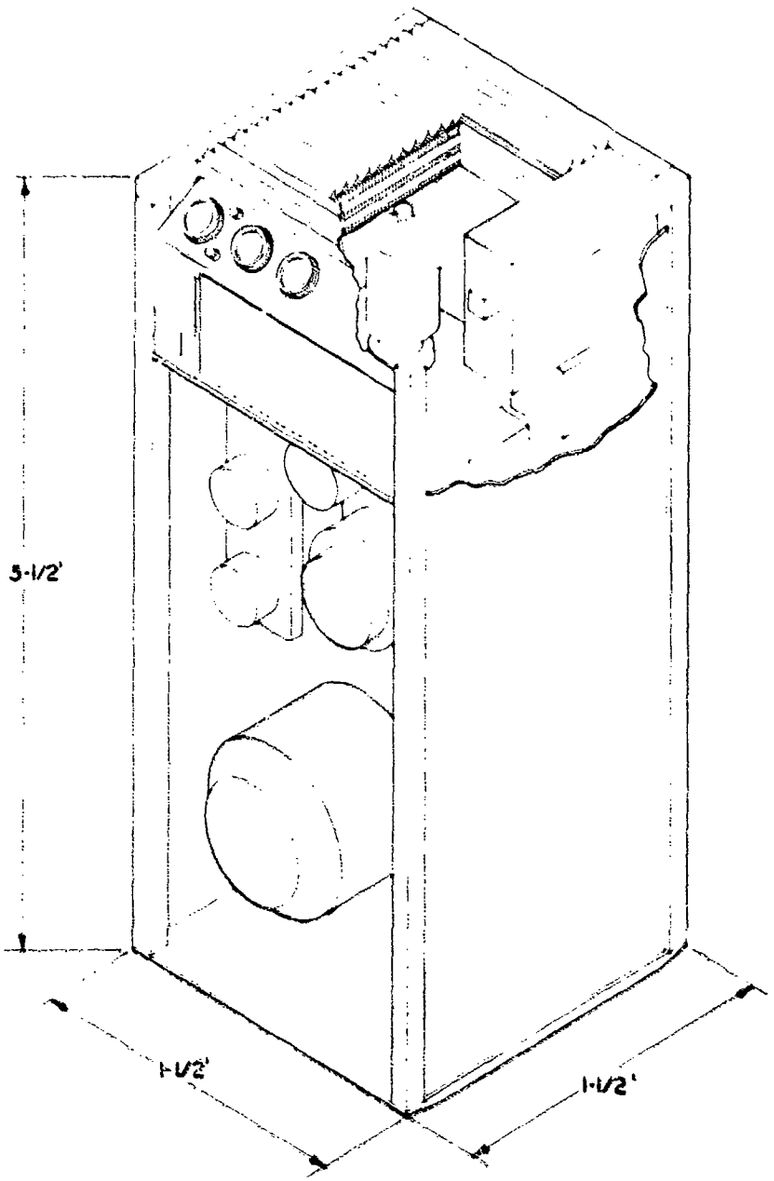

Figure VIII-8 1.5KW ORC Repackaged Concept

SECTION IX

CALIBRATION REQUIREMENTS SUMMARY

IX. CALIBRATION REQUIREMENTS SUMMARY

The calibration requirements summary establishes for the measured parameters the traceability of measurement from the operational equipment to the standards of the National Bureau of Standards.

Table IX A lists the parameters measured for which traceability is provided with the following records. Table IX B delineates thermocouple calibration.

Table IX-A Traceability and Record Identification

Parameter	Description	ID Number
TNI	Temperature nozzle inlet	0775100K
TRO	Temperature regenerator liquid out	0775074K
TRVI	Temperature regenerator vapor inlet	0775062K
THWL	Temperature hotwell liquid	0775099K
TVO	Temperature vaporizer out	0775103K
THE	Temperature heater exhaust	0775078K
TRVO	Temperature regenerator vapor out	0775087K
TRI	Temperature regenerator liquid inlet	0775085K
QE	Flow economizer	FL 205
QR	Flow regenerator	FL 308
QBP	Flow boost pump	FL 277
PNI	Pressure nozzle inlet	PT 204 & PT 160*
PC	Pressure condenser	PT 744 & PT 423
PBO	Pressure boost pump out	PT 232 & PT 760
PBI	Pressure bearing inlet	PT 186

* Used only during N_2 spin checks (PVO)

NOTE. The standard quality control period between calibrations is.

26 weeks for pressure transducers from the time of initial use after calibration

26 weeks for flowmeters from the time of initial use after calibration

52 weeks for thermocouples from the time of initial use after calibration

The test (use) period was from 1 21 75 through 4 18 75.

Table IX-B Thermocouple Calibration

Range: 0°F to 2400°F

Calibration date: Month 7, Year 1974

Usable period after calibration: 1 year

Instrument calibration: Model 1 8 x 12 K

Calibration points: 32.0 ± 5.0°F
786.4 ± 5.9°F
1761.4 ± 13.2°F
Type – K

Type thermocouple. Chromel – Alumel

[illegible]: _____

[illegible]: _____

[illegible] FLUID: MIL-C-7024B

[illegible]: 1.24 cSt @ 86 °F

[illegible] TEST: _____

SCHLUMBERGER INDUSTRIES
4747 Harrison Ave.
Rockford, Illinois 61101
Phone (815) 226-6000

FLOWMETER S/N: 329[illegible]

MODEL NUMBER: 6-1S[illegible]

MANUFACTURER: UCX

PICKUP S/N: 1[illegible]3

CALIBRATION NUMBER: FL-[illegible]15

[illegible]	APPROX FREQ	WEIGHT LBS	FLUID TEMP °F	FLUID SPEC GRAV	FLUID VOL GAL	TIME SEC	TOTAL CYCLES	TRUE FREQ CPS	GRAV FLOW LBS/HR	VOL FLOW GPM	CYCLES PER GAL	CPS/T[illegible]
[illegible]	200	.2	80	.965	.0314	55.369	10988	198		.0340		
[illegible]	300	.3			.0470	57.392	17430	304		.0491		
[illegible]	500	.4			.0627	49.434	24155	501		.0761		
[illegible]	700	.6			.0941	54.533	38265	702		.0353		
[illegible]	900	.7			.1098	50.358	45485	903		.1308		
[illegible]	1200	.9			.1411	49.533	59443	1200		.1709		
[illegible]	1500	1.1			.1725	49.464	74209	1500		.2092		
[illegible]	1800	1.3			.2038	49.088	88318	1799		.2491		
[illegible]												
[illegible]												
[illegible]												
TOTAL												

[illegible] /CYL: _____

[illegible] /CYL: _____

[illegible] LBS/CYL: _____ %

[illegible] LBS/CYL: _____ %

CALIBRATION STAND: COX MODEL 3[illegible]5T, S/N 0E37-[illegible]

DATE OF LAST CALIBRATION WITH [illegible] FLOWMETER [illegible]

OPERATOR: [illegible] QC: [illegible]

[illegible]:

P.O. NUMBER:

[illegible] FLUID: [illegible]-A-7134B

[illegible]: 1.24 cSt @ 80 °F

[illegible] TEST:

SUNDSTRAND AVIATION
4747 Harrison Ave.
Rockford, Illinois 61101
Phone (815) 226-6000

FLOWMETER S/N: 14609

MODEL NUMBER: CF6-[illegible]

MANUFACTURER: Cox

PICKUP S/N: 1P3

CALIBRATION NUMBER: FL-[illegible]02

[illegible]	PRESSURE PSIG	PRESSURE LBS	FLUID TEMP °F	FLUID SPEC GRAV	FLUID VOL GAL.	TIME SEC	TOTAL CYCLES	TRUE FREQ. CPS	GRAV. FLOW LBS./HR.	VOL. FLOW GPM	CYCLES PER GAL.	CPS/TT	
	150	.6	80	.765	.094	48.334	5785	120		.1168			
	200	1			.1568	50.811	10043	200		.1873			
	200	1.5			.2352	51.109	15382	301		.2761			
	400	2			.3136	51.809	20749	400		.3631			
	600	3			.4704	52.202	31397	601		.5406			
	800	4			.6272	52.441	41970	800		.7176			
	1000	5			.7840	52.511	52602	1002		.8958			
	1200	6			.9408	52.700	63378	1200		1.0690			

[illegible]/CL:

[illegible]/CL:

[illegible] %

[illegible]/CL: %

CALIBRATION STAND: COX MODEL 205T, S/N 6537-

DATE OF LAST CORRELATION WITH COX/NBS TRANSFER STANDARD: [illegible]

[illegible]:

[illegible]:

[illegible]:

[illegible] FLUID: DTL-0-[illegible]

[illegible]: 1.25 cSt @ 80 °F

[illegible] TEST:

SUNDSTRAND AVIATION
4747 Harrison Ave.
Rockford, Illinois 61101
Phone (815) 226-6000

FLOWMETER S/N: K 58014 [illegible]

MODEL NUMBER: [illegible]-1

MANUFACTURER: FCP

PUMP S/N:

[illegible] NUMBER: FL-[illegible]77

[illegible]	AVERAGE FREQ	WEIGHT LBS	FLUID TEMP °F	FLUID SPEC GRAV	FLUID VOL GAL	TIME SEC.	TOTAL CYCLES	TRUE FREQ CPS	GRAV FLOW LBS/HR	VOL. FLOW GPM	CYCLES PER GAL.	CPS/[illegible]
	60	.6	80	.765	.1041	49189	1953					
	100	1.0			.1568	51346	5145					
	150	1.5			.2355	52099	7844					
	200	2			.3136	52328	10490					
	250	2.5			.3920	52496	13151					
	300	3.0			.4704	52647	15781					
	350	3.5			.5488	52623	18430					
	400	4.0			.6272	52677	21035					
	500	4.5			.7056	49180	23574					
	600	5.5			.8624	49776	28680					

[illegible]/CYL:

[illegible]/CYL:

[illegible] CYCLES/CYL: %

[illegible] CYCLES/CYL: %

CALIBRATION STAND: CON MODEL 335T, S/N 6537-[illegible]

DATE OF LAST CORRELATION WITH [illegible] TRANSFER [illegible]

[illegible] TOR:

PT. 204 PRESS. HIGH 1 0 TO 1000 CELL 02 INI MEROC

CAL POINT STANDARD

AS LEFT

	%	INPUT	ANALOG VOLTAGE
	0	0	0.000
LOW	20	200	1.000
MED	40	400	1.995
	60	600	3.000
HIGH	80	800	3.997
	100	1000	5.000

TECH PRK

CALIBRATION FIGURE 3 . 2.568 VDC

PT. 232 PRESS. TOCH 0 TO 304 CELL 02 PPO (PBO)

CAL POINT STANDARD

AS LEFT

	%	INPUT	ANALOG VOLTAGE
	0	0	0.000
LOW	20	4	
MED	40	10	2.998
	60	15	
HIGH	80	23	
	100	30	5.000

See Tech Chart TECH VRK

CALIBRATION FIGURE 4 . 3.998 VDC

PT. 744 PRESS. SUCH. Y 0 TO 50 A CELL 02 PC MEROC

CAL POINT STANDARD

AS LEFT

	%	INPUT	ANALOG VOLTAGE
	0	0	0.000
LOW	20	6	0.990
MED	40	12	1.997
	60	18	3.001
HIGH	80	24	3.997
	100	30	5.000

3.363

TECH PRK

CALIBRATION FIGURE 3 . 3.307 VDC

PT 760 | PRESS XDCR Y | 0 TO 50 A | CELL 02 PV MERDC

CAL POINT 0-

STANDARD 34 82

AS LEFT — NEISI

%	INPUT	ANALOG VOLTAGE
0	0	0.000
20	6	0.995
40	12	1.988
60	18	2.994
80	24	3.995
100	30	5.000

LOW / MED / HIGH

TECH P.R.R.

CALIBRATION FIGURE # 3 3.664 VDC

PIT 0760 — 12134

Form 8034 ELECTRONIC GAGE RECHECK

PT 160 | PRESS XDCR Y | 0 TO 1000 | CELL 02 PVO MERDC

CAL POINT 0-

STANDARD 34 82

AS LEFT — NEISI

%	INPUT	ANALOG VOLTAGE
0	0	0.00
20	200	1.001
40	400	2.005
60	600	3.004
80	800	4.006
100	1000	5.000

LOW / MED / HIGH

TECH P.R.R.

CALIBRATION FIGURE # 4 3.674 VDC

PIT 0160 — 12134

Form 8034 ELECTRONIC GAGE RECHECK

PT 176 | PRESS XDCR | 0 TO 50 | CELL 02 PBX MERDC

CAL POINT 0-

STANDARD P-384

AS LEFT — NEISI

%	INPUT	ANALOG VOLTAGE
0	0	0.001
20	10	0.995
40	20	2.002
60	30	3.002
80	40	—
100	50	—

LOW / MED / HIGH

TECH

CALIBRATION FIGURE # 4 3.767 VDC

PIT 0160.15 — 0230

Form 8034 ELECTRONIC GAGE RECHECK

MCDONNELL AVIATION

INSTRUMENT CALIBRATION DATA

QAID _____ QUALITY ASSURANCE

MFG. Mansfield & Green EQUIP. NAME DEAD WEIGHT TESTER PROPERTY NO. XX-82

SERIAL NO. 959-25 CALIB. ACCURACY 0.1% CALIB. CYCLE 1 YEAR MODEL TYPE 10-10525

XX INST 82	X STANDARD 62	ERROR	TOL.	XX INST 82	X STANDARD 62	ERROR	TOL.	XX INST. 82	X STANDARD 62	ERROR	TOL.
50	50	0	.453	5	5	0		50	50	0	
100	100		.907	10	10		.907	100	100		
150	150		1.81	15	15			150	150		
200	200		1.81	20	20		1.81	200	200		
400	400		3.63	25	25			400	400		
600 +	600	2	5.44	45	45			600 +	600	2	
800 +	800	2"	7.26	65	65			800 +	800	3	
1000	1000	0	9.07	85	85			1000	1000		
2000 +	2000	8"	18.14	105	115			2000 +	2000	10	
3000 +	3000	12"	27.22	200 -	200	5	18.14	3000 +	3000	18	
4000 +	4000	12"	36.29	300 -	300	4"	27.22	4000 +	4000	18	
5000 +	5000	12"	45.36	400 -	400	4"	36.29	+	5000	18	
6000 +	6000	12"	54.43	500 -	500	4"	45.36	+	6000	20	
7000 +	7000	12"	63.5	600 -	600	4"	54.43	7000 +	7000	22	
8000 +	8000	12"	72.58	700 -	700	4"	63.5	8000	8000	22	
9000 +	9000	10"	81.65	800 -	800	4"	72.58	9000	9000	20	
10,000 +	10,000	10"	90.72	900 -	900	5"	81.65	10,000	10,000	21	
				1000 -	1000	6	90.72				

STD. USED X-62
DATE CALIB. 2-13-75 CALIB. BY [illegible]
VOID DATE [illegible] INSP BY [illegible]
[illegible]

STD. USED X-62
DATE CALIB. [illegible] CALIB. BY [illegible]
VOID DATE [illegible] INSP BY [illegible]
[illegible]

STD. USED X-62
DATE CALIB. [illegible] CALIB. BY [illegible]
VOID DATE [illegible] INSP BY [illegible]

Form P 6673A

SUNDSTRAND AVIATION QUALITY CONTROL & RELIABILITY DEPARTMENT

FORM [illegible]

INSTRUMENT CERTIFICATION RECORD

811

ITEM CALIBRATED: DIGITAL MULTIMETER — CALIBRATION INTERVAL: 30 WEEKS

SECTION A

1 TYPE: DC, INC RMS, OHMS — 6 TO INST NO: MFG. MANUAL

2 MANUFACTURER: FLUKE — 7 MODEL NO.: 8375A

3 ACCURACY: See Below — 8 RANGE: [illegible], .1, 1, 10, 100, 1000 Ohms 0 - 10M OHMS

4 IDENT NO: VE-150

5 SERIAL NO.: 75405

SECTION B

9 DATE CALIBRATED	10 CALIB. BY	11 REASON	12 ADJUSTMENT NECESSARY	13 VISUAL INSPECTION	14 REPORT ISSUED	15 LOCATION	16 DATE DUE FOR RECALIBRATION
4/12/73	[illegible]	1				SUE-E -	1 YR

CODE LIST FOR SECTION B

9 DATE CALIBRATED: ENTER MONTH / DAY / YEAR

10 CALIBRATED BY: ENTER INITIALS OF PERSON PERFORMING CALIBRATION

11 REASON: ENTER NUMBER ONLY
1 CERTIFICATION 2 CALIBRATION (PERIODIC) 3 TROUBLE SHOOTING 4 QUALIFICATION TESTING 5 OPERATIONAL FAILURE

12 ADJUSTMENT NECESSARY: ENTER YES OR NO

13 VISUAL INSPECTION: ENTER NUMBER ONLY
1 SEVERE ENVIRONMENT 2 MECHANICAL MISHANDLING 3 ARE & LONG DEVICE 4 OVERLOAD 5 NEW CONDITION (PHYSICALLY) 6 DAMAGED

14 REPORT ISSUED: ENTER YES OR NO

15 LOCATION: ENTER LOCATION OF ITEM WHERE IT HAS LAST BEEN
1 TEST STAND 2 CALIB LAB 3 SHOP 4 OTHER (SPECIFY)

16 DUE DATE: DC - ONE YEAR, 0.1V RANGE 2 [illegible] 1.00% RANGE, 1.5V [illegible]
[illegible] 100, 1000 [illegible] 1.00% RANGE.
DC ACCURACY: 0.15%, [illegible] UP TO 500V.
OHMS ACCURACY: 10 Ω RANGE, [illegible]
100 Ω, 1 K RANGE, [illegible]
10 K, 100 K RANGE, [illegible]
1000 K RANGE, [illegible]

CALIBRATION DATA
John Fluke Digital Multimeter Model 8375A

Identification VE-150

Date Calibrated 01-15-75 By [illegible]

Calibration Not Valid After [illegible]

Standards Used X-44 X-5[illegible] X-31, 32, 33, 34, 35, 41

Maintenance And Repairs Performed [illegible]

PROCEDURE

Adjust No Adj. Level

1. DC Range Check. (T.I. is Test Instrument)

Range	Standard	T.I. As Found	T.I. As Left	Error	Tolerance
0.1 VDC	+ .010000	0.009997		.000003	.000008
	- .010000	0.00992		.00002	.00008
	- .10000	0.00008		.00002	.00020
	+ .10000	0.099994		.000006	.00020
1.0 VDC	+0.10000.0	0.09999		.00001	.00005
	-0.10000.0	-0.09996		.00004	.00005
	-1.00000	-0.99994		.00006	.0023
	+1.00000	0.99998		.00002	.0023
10.0 VDC	+1.00000	0.9999		.0001	.001
	-1.00000	-0.9999		.0001	.001
	-10.00000	-9.9998		.0002	.012
	+10.00000	9.9992		.0008	.012
100.0 VDC	+10.00000	9.999		.001	.03
	-10.00000	-9.999		.001	.03
	-100.00000	-99.999		.001	.12
	+100.0000	99.993		.007	.12
1000	+100.0000	99.99		.01	.3
	-100.0000	-100.00		0	.3
	-1000.000	-1000.01		.01	.12
	+1000.000	999.94		.06	.12

NOTE: The following calibration steps are to be performed only if the above checks were found out of Specs.

5. Buffer Aero Adjustment.
6. Bias Current Adjustment.
7. Reference Voltage Adjustment.
8. A–D Zero Adjustment.
9. + Cal. Adjustment.
10. Ladder Cal.
11. Negative Cal. Adjustment.
12. Remainder Adjustment.
13. Comparator Level Adjustment.
14. RMS Range Amplifier Zero.
15. Balance Amplifier Zero.
16. Balance Gain.
17. AC Zero.
18. Calibration Adjustment/Check.
19. Coarse Calibration.
20. Buffer DC Calibration.
21. Active Filter.
22. Kilohms Calibration.
23. Ohms Calibration.

UNCLASSIFIED
Security Classification

DOCUMENT CONTROL DATA - R & D

(Security classification of title, body of abstract and indexing annotation must be entered when the overall report is classified)

1. ORIGINATING ACTIVITY (Corporate author) SUNDSTRAND AVIATION 336560 4747 HARRISON AVE. ROCKFORD, ILLINOIS 61108	2a. REPORT SECURITY CLASSIFICATION UNCLASSIFIED 2b. GROUP
3. REPORT TITLE ORGANIC RANKINE CYCLE SILENT POWER PLANT 1.5 KW, 28 VOLTS D. C.	
4. DESCRIPTIVE NOTES (Type of report and inclusive dates) PROGRAM REPORT	
5. AUTHOR(S) (First name, middle initial, last name) RONALD F. McKENNA	
6. REPORT DATE AUG. 1975	7a. TOTAL NO. OF PAGES / 7b. NO. OF REFS 0
8a. CONTRACT OR GRANT NO. DAAK02-72-C-0472 b. PROJECT NO. c. d.	9a. ORIGINATOR'S REPORT NUMBER(S) 9b. OTHER REPORT NO(S) (Any other numbers that may be assigned this report) REF. FINAL REPORT ATR 1182, 24 JUNE 1974
10. DISTRIBUTION STATEMENT [redacted]	DISTRIBUTION STATEMENT A Approved for public release; Distribution Unlimited
11. SUPPLEMENTARY NOTES	12. SPONSORING MILITARY ACTIVITY ELECTROTECHNOLOGY DEPARTMENT ELECTROMECHANICAL DIVISION U.S.ARMY MOBILITY R & D CENTER

13. ABSTRACT

This report describes the design, fabrication and test of components subsystems and organic Rankine Cycle Power Plant. Design point net output power is 1.5 KW at 28 V.D.C. Power is produced by combustion of an air/fuel mixture and transferring the thermal energy to CP-25, the working fluid, which is expanded through a turbine. The turbine is part of a turbo-alternator which also powers internal accessory components. Specific design criteria involves precise quality of power, weight, volume, efficiency, life and noise limitations, severe environment and shock, and multi-fuel operating requirements. The set is portable, self-contained except for fuel supply and is intended to operate as a silent power plant.

DD Form 1473 (Replaces DD Form 1473, 1 Jan 64, which is obsolete for Army use)

Security Classification

UNCLASSIFIED
Security Classification

14 KEY WORDS	LINK A ROLE	LINK A WT	LINK B ROLE	LINK B WT	LINK C ROLE	LINK C WT
RANKINE CYCLE						
WORKING FLUID						
GENERATOR						
ALTERNATOR						
TURBINE						
BEARINGS						
PITOT PUMP						
GEARBOX						
HEATER						
VAPORIZER						
ECONOMIZER						
REGENERATOR						
CONDENSER						
BOOST PUMP						
HAND PUMP						
DIGITAL CONTROL VALVES						
VAPOR SHUTOFF VALVE						
CONTROL SYSTEM						
COMBUSTOR						
AIR/FUEL SYSTEM						
FUEL METERING PUMP						
ATOMIZING AIR COMPRESSOR						
MAGNETO						
CONDENSER FAN						
AIR BLOWER						
ACCUMULATOR						
ALTITUDE COMPENSATING VALVE						
START PUMP						

UNCLASSIFIED
Security Classification