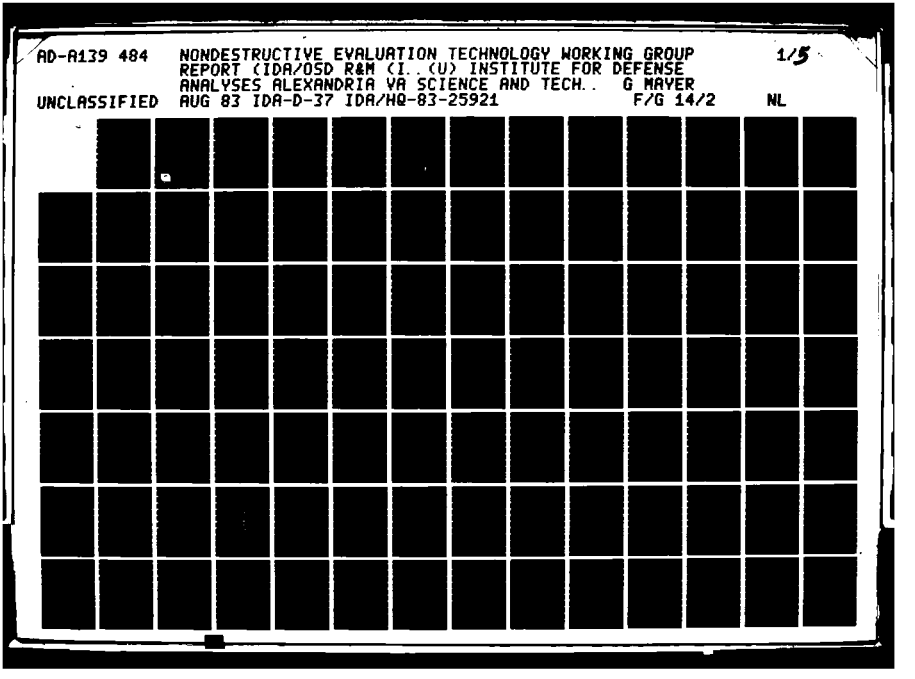

AD-A139 484 NONDESTRUCTIVE EVALUATION TECHNOLOGY WORKING GROUP 1/5
REPORT (IDA/OSD R&M (I..(U) INSTITUTE FOR DEFENSE
ANALYSES ALEXANDRIA VA SCIENCE AND TECH.. G MAYER
UNCLASSIFIED AUG 83 IDA-D-37 IDA/HQ-83-25921 F/G 14/2 NL

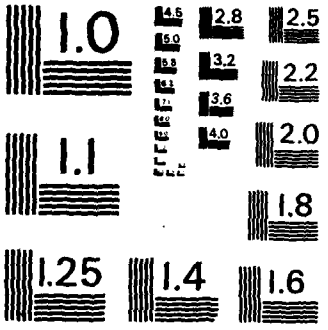

MICROCOPY RESOLUTION TEST CHART
NATIONAL BUREAU OF STANDARDS-1963-A

Copy 10 of 200 copies

IDA RECORD DOCUMENT D-37

NONDESTRUCTIVE EVALUATION TECHNOLOGY WORKING GROUP REPORT (IDA/OSD R&M STUDY)

AD A139484

George Mayer
U.S. Army Research Office
Working Group Chairman

DTIC ELECTE MAR 14 1984 S A

August 1983

The views expressed within this document are those of the working group only. Publication of this document does not indicate endorsement by IDA, its staff, or its sponsoring agencies.

Prepared for
Office of the Under Secretary of Defense for Research and Engineering
and
Office of the Assistant Secretary of Defense
(Manpower, Reserve Affairs and Logistics)



INSTITUTE FOR DEFENSE ANALYSES
SCIENCE AND TECHNOLOGY DIVISION

DTIC FILE COPY

IDA Log No. HQ 83-25921

The work reported in this document was conducted under contract MDA 903 79 C 0018 for the Department of Defense. The publication of this IDA Record Document does not indicate endorsement by the Department of Defense, nor should the contents be construed as reflecting the official position of that agency.

Approved for public release; distribution unlimited.

UNCLASSIFIED

SECURITY CLASSIFICATION OF THIS PAGE (When Data Entered)

REPORT DOCUMENTATION PAGE		READ INSTRUCTIONS BEFORE COMPLETING FORM
1. REPORT NUMBER	2. GOVT ACCESSION NO. AD-A139 484	3. RECIPIENT'S CATALOG NUMBER
4. TITLE (and Subtitle) Nondestructive Evaluation Technology Working Group Report (IDA/OSD R&M Study)		5. TYPE OF REPORT & PERIOD COVERED Final July 1982 - August 1983
		6. PERFORMING ORG. REPORT NUMBER IDA Record Document D-37
7. AUTHOR(s) George Mayer, U.S. Army Research Office Working Group Chairman		8. CONTRACT OR GRANT NUMBER(s) MDA 903 79 C 0018
9. PERFORMING ORGANIZATION NAME AND ADDRESS Institute for Defense Analyses 1801 N. Beauregard Street Alexandria, VA 22311		10. PROGRAM ELEMENT, PROJECT, TASK AREA & WORK UNIT NUMBERS Task T-2-126
11. CONTROLLING OFFICE NAME AND ADDRESS Office of the Assistant Secretary of Defense (MRA&L), The Pentagon Washington, D.C. 20301		12. REPORT DATE August 1983
		13. NUMBER OF PAGES 471
14. MONITORING AGENCY NAME & ADDRESS (if different from Controlling Office) DoD-IDA Management Office, OUSDRE 1801 N. Beauregard Street Alexandria, VA 22311		15. SECURITY CLASS. (of this report) UNCLASSIFIED
		15a. DECLASSIFICATION/DOWNGRADING SCHEDULE N/A

16. DISTRIBUTION STATEMENT (of this Report)

Approved for public release; distribution unlimited.

17. DISTRIBUTION STATEMENT (of the abstract entered in Block 20, if different from Report)

None

18. SUPPLEMENTARY NOTES

N/A

19. KEY WORDS (Continue on reverse side if necessary and identify by block number)

reliability, maintainability, readiness, non destructive evaluation, composites, acoustics, systems monitoring, magnetic flux leakage, generic residual stress, X-ray, image processing, neutron processing, neutron radiography, vibrothermography, nuclear magnetic resonance

20. ABSTRACT (Continue on reverse side if necessary and identify by block number)

This document records the activities and presents the findings of the Nondestructive Evaluation Technology Working Group part of the IDA/OSD Reliability and Maintainability Study, conducted during the period from July 1982 through August 1983.

DD FORM 1 JAN 73 1473 EDITION OF 1 NOV 65 IS OBSOLETE

UNCLASSIFIED

SECURITY CLASSIFICATION OF THIS PAGE (When Data Entered)

IDA RECORD DOCUMENT D-37

NONDESTRUCTIVE EVALUATION TECHNOLOGY WORKING GROUP REPORT (IDA/OSD R&M STUDY)

George Mayer
U.S. Army Research Office
Working Group Chairman

August 1983

Accession For
NTIS GRA&I
DTIC TAB
Unannounced
Justification
By
Distribution/
Availability Codes
Dist | Avail and/or Special
A-1

DTIC COPY INSPECTED 2



INSTITUTE FOR DEFENSE ANALYSES
SCIENCE AND TECHNOLOGY DIVISION
1801 N. Beauregard Street, Alexandria, Virginia 22311

Contract MDA 903 79 C 0018
Task T-2-126

RELIABILITY AND MAINTAINABILITY STUDY

— REPORT STRUCTURE —

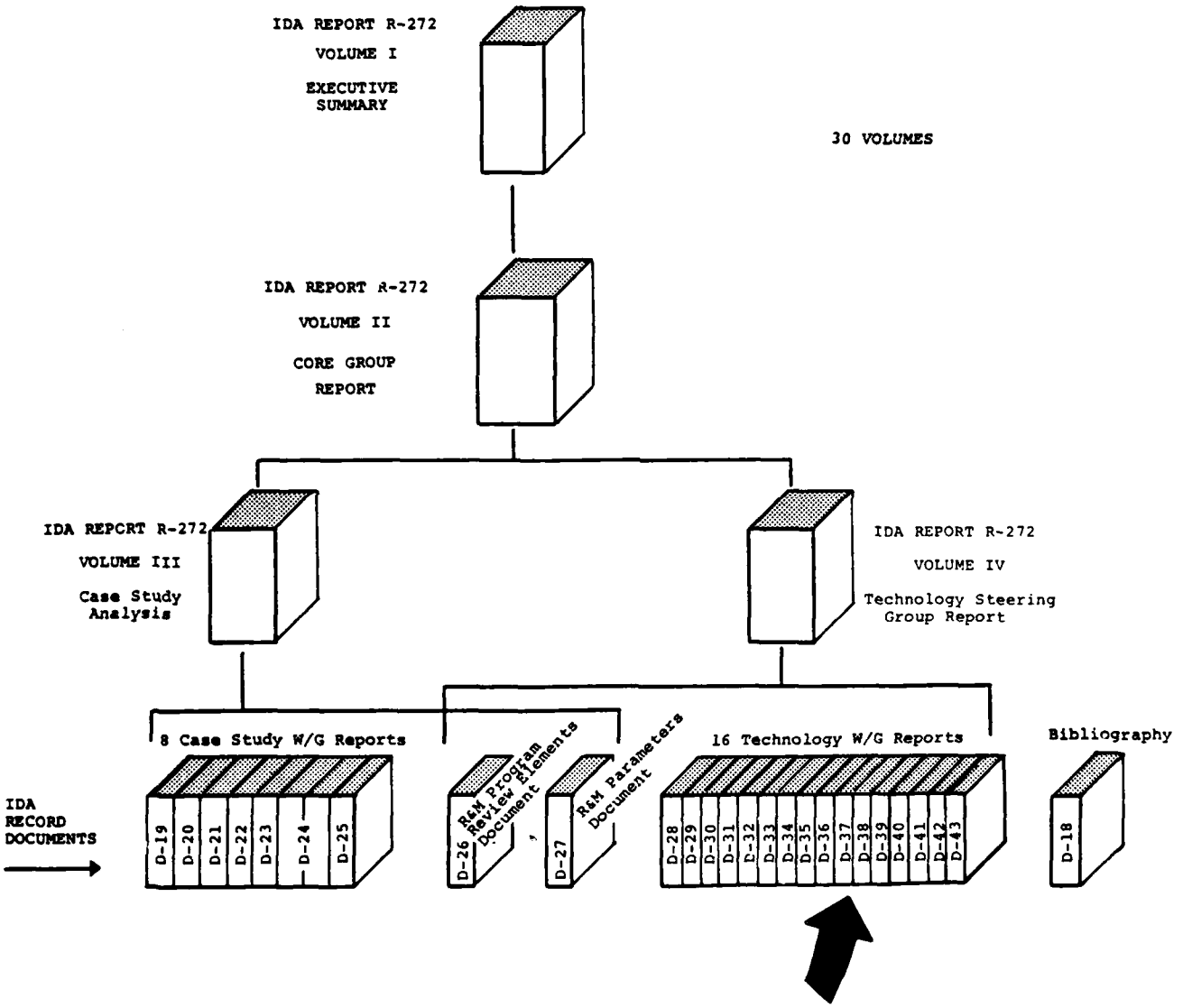

THIS DOCUMENT

(IDA RECORD DOCUMENT D-37)

PREFACE

As a result of the 1981 Defense Science Board Summer Study on Operational Readiness, Task Order T-2-126 was generated to look at potential steps toward improving the Material Readiness Posture of DoD (Short Title: R&M Study). This task order was structured to address the improvement of R&M and readiness through innovative program structuring and applications of new and advancing technology. Volume I summarizes the total study activity. Volume II integrates analysis relative to Volume III, program structuring aspects, and Volume IV, new and advancing technology aspects.

The objective of this study as defined by the task order is:

> "Identify and provide support for high payoff actions which the DoD can take to improve the military system design, development and support process so as to provide quantum improvement in R&M and readiness through innovative uses of advancing technology and program structure."

The scope of this study as defined by the task order is:

> To (1) identify high-payoff areas where the DoD could improve current system design, development program structure and system support policies, with the objective of enhancing peacetime availability of major weapons systems and the potential to make a rapid transition to high wartime activity rates, to sustain such rates and to do so with the most economical use of scarce resources possible, (2) assess the impact of advancing technology on the recommended approaches and guidelines, and (3) evaluate the potential and recommend strategies that might result in quantum increases in R&M or readiness through innovative uses of advancing technology.

The approach taken for the study was focused on producing meaningful implementable recommendations substantiated by quantitative data with implementation plans and vehicles to be provided where practical. To accomplish this, emphasis was placed upon the elucidation and integration of the expert knowledge and experience of engineers, developers, managers, testers and users involved with the complete acquisition cycle of weapons systems programs as well as upon supporting analysis. A search was conducted through major industrial companies, a director was selected and the following general plan was adopted.

General Study Plan

- Vol. III • Select, analyze and review existing successful program
- Vol. IV • Analyze and review related new and advanced technology
- Vol. II (• Analyze and integrate review results
  (• Develop, coordinate and refine new concepts
- Vol. I • Present new concepts to DoD with implementation plan and recommendations for application.

The approach to implementing the plan was based on an executive council core group for organization, analysis, integration and continuity; making extensive use of working groups, heavy military and industry involvement and participation, and coordination and refinement through joint industry/service analysis and review. Overall study organization is shown in Fig. P-1.

The basic technology study approach was to build a foundation for analysis and to analyze areas of technology to surface: technology available today which might be applied more broadly; technology which requires demonstration to finalize and reduce risk; and technology which requires action today to provide reliable and maintainable systems in the future. Program structuring implications were also considered. Tools used to accomplish

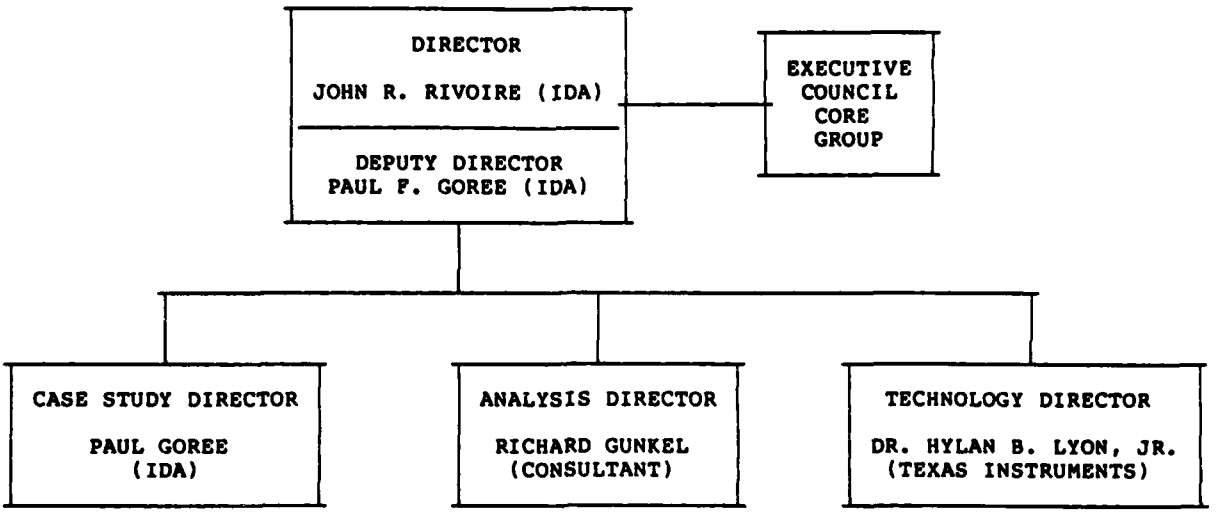

FIGURE P-1. Study Organization

this were existing documents, reports and study efforts such as the Militarily Critical Technologies List. To accomplish the technology studies, sixteen working groups were formed and the organization shown in Fig. P-2 was established.

This document records the activities and findings of the Technology Working Group for the specific technology as indicated in Fig. P-2. The views expressed within this document are those of the working group only. Publication of this document does not indicate endorsement by IDA, its staff, or its sponsoring agencies.

Without the detailed efforts, energies, patience and candidness of those intimately involved in the technologies studied, this technology study effort would not have been possible within the time and resources available.

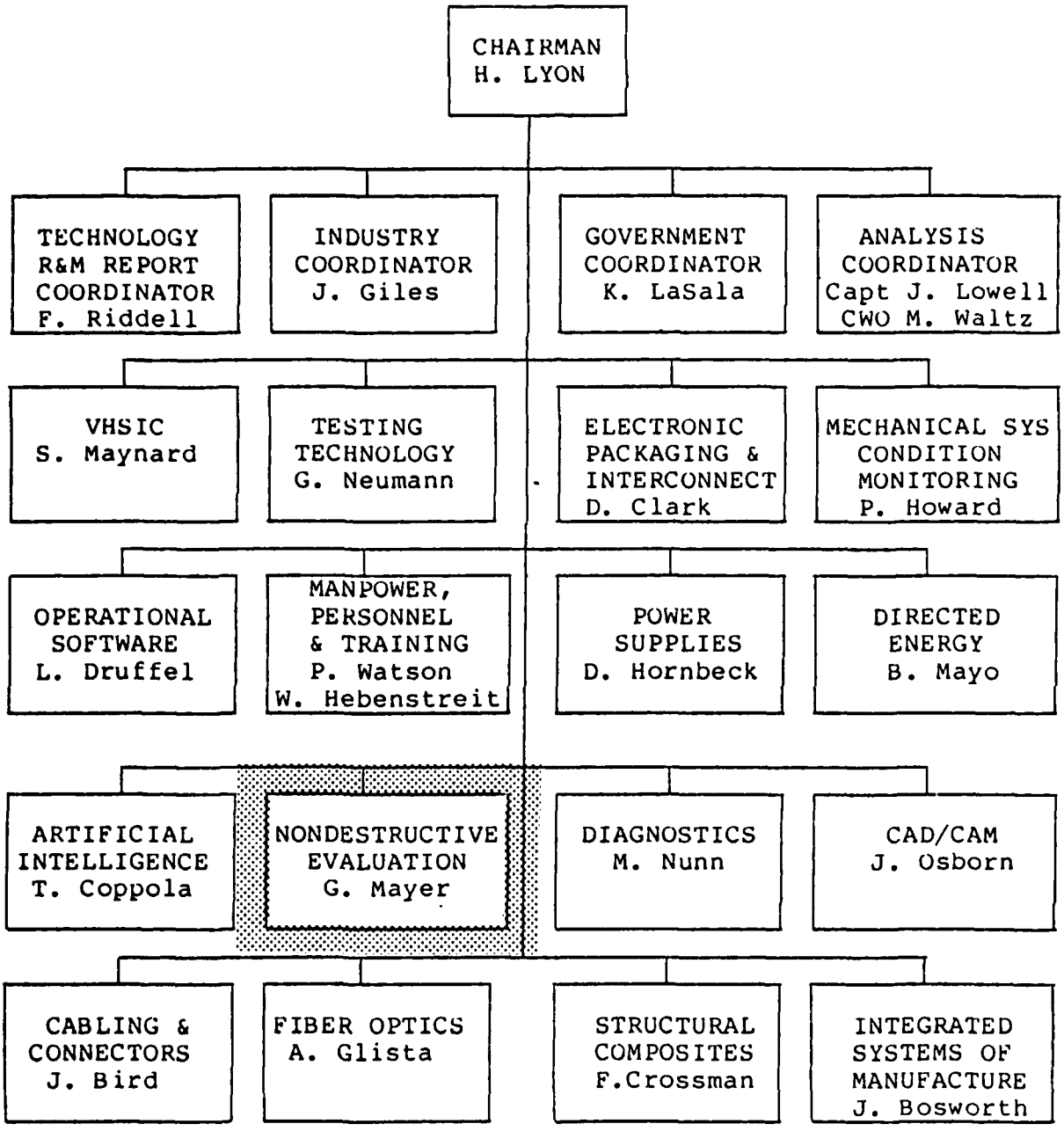

FIGURE P-2. Technology Study Organization

REPORT

OF THE

NONDESTRUCTIVE EVALUATION

WORKING GROUP

RELIABILITY AND MAINTAINABILITY

STUDY

MAY 11, 1983

FOREWORD

The following report is the summary of the work of the Nondestructive Evaluation Committee of the OSD/IDA Study on the Impact of High Technology on the Reliability and Maintainability of Defense Systems. The study was conducted by the participants and cooperating organizations and individuals during the period January through June 1983.

The Committee greatly appreciates the support of Mr. John R. Rivoire and Ms. Anthea DeVaughn of the Institute of Defense Analyses and of Ms. Susan Watkins and Ms. Kathy Dunnmon of the Army Research Office.

George Mayer
Chairman
NDE Committee

TABLE OF CONTENTS

I.	WORK STATEMENT	I-1
II.	EXECUTIVE SUMMARY	II-1
III.	INTRODUCTION	III-1
	A. NDE and Its Applications	III-1
	B. Make-up of the Committee	III-7
	C. Related Studies and other Activities	III-11
	D. Task Groups and Selection of other Related Topics	III-25
IV.	TASK REPORTS	IV-1
	A. Task Groups	
	1. Tanks	IV-1
	2. Fixed Wing Aircraft	IV-61
	3. Rotary Wing Aircraft	IV-141
	4. Ships (published under separate cover)	
	5. Armaments	IV-293
	B. Improvement of the Data Base	IV-325
	C. Personnel Selection, Training, and Qualification	IV-353
	D. Inspection Manuals	IV-365
	E. Specifications and Standards	IV-367
	F. Fracture Toughness and NED	IV-437
	G. Acceleration of NDE Methods and Equipment into Systems	IV-473
	H. Developing and Emerging Areas	IV-491
V.	SPECIAL PROBLEMS OF THE STUDY	V-1
VI.	COMMON AREAS OF CONCERN WITHIN THE STUDY AND WITH OTHER WORKING GROUPS	VI-1
VII.	CONCLUSIONS AND RECOMMENDATIONS	VII-1

NDE COMMITTEE OF THE TECHNOLOGY STEERING GROUP

(R/M STUDY)

STATEMENT OF WORK

GOAL: TO IDENTIFY WHERE NDE AND ASSOCIATED INSPECTION TECHNOLOGIES CONTRIBUTE (±) TO RELIABILITY AND MAINTAINABILITY (R/M) OF WEAPON SYSTEMS.

TO IDENTIFY WHERE NDE AND ASSOCIATED INSPECTION TECHNOLOGIES, METHODOLOGIES AND MANAGEMENT NEED IMPROVEMENT.

TO DEFINE WHERE AND HOW, IN THE ACQUISITION CYCLE, NDE AND ASSOCIATED INSPECTION TECHNOLOGIES CAN BE INJECTED INTO PROGRAMS.

SCOPE: EXAMINE IMPACT OF NONDESTRUCTIVE, CHEMICAL, MECHANICAL AND ELECTRONIC INSPECTION TECHNOLOGIES ON R/M, THE APPLICATION AND DEVELOPMENT OF THESE TECHNOLOGIES DURING ACQUISITION OF WEAPON SYSTEMS, AND THE DEVELOPMENT OF NEW NDE AND ASSOCIATED INSPECTION TECHNOLOGIES.

ISSUES:

1. HOW CAN NDE AND ASSOCIATED TECHNOLOGIES BE BETTER APPLIED TO IMPROVE R/M OF WEAPON SYSTEMS?
2. WHAT IMPROVEMENTS IN THESE TECHNOLOGIES WOULD RESULT IN SIGNIFICANT IMPROVEMENTS IN R/M OF WEAPON SYSTEMS?
3. HOW CAN THESE TECHNOLOGIES BE BETTER MANAGED BY DEPARTMENT OF DEFENSE?

II. EXECUTIVE SUMMARY - NDE

Nondestructive Evaluation (NDE) methods have been valuable tools for quality control and maintenance for some decades. During the past several years, and in the future, NDE methods, coupled with advances in allied fields, have held and will hold outstanding promise for achieving quantum gains in reliability and maintainability of defense systems "across the board." Evidence of the significant gains which have already been achieved, coupled with listings of high ROI routes which are recommended for implementation are included in the body of the report and in the appended tables. The ROI typically falls into several of the following areas:

- O Cost reduction (per year or over life cycle)
- O Reduced cost of repair or replacement
- O Reduced downtime (increased availability)
- O Increased operational readiness
- O Increased mission effectiveness
- O Reduced requirements for spare parts
- O Reduced manpower requirements
- O Cost avoidance
- O Elimination of operational hazards.
- O Extended life cycle

The significant effects of early warning by NDE so that corrective action could be taken can be demonstrated by two examples:

* NDE and related monitoring systems, coupled with improved engineering and advanced engineering management methods, have been so effective in assuring naval ship reliability, that time between major overhauls has been extended to the point that approximately one half of the cost of each cancelled shipyard overhaul (or savings of $50M+ per ship) is avoided. Associated gains in operational readiness are achieved through realization that more time in the life cycle of each naval ship is available for operation, equivalent to an increase in the size of the useful fleet of some classes of ships of 10%.

* The application of Durability and Damage Tolerance Analyses (DADTA), in which NDE plays a leading role, has been instrumental in evaluating and protecting many fleet aircraft. For example, this approach was used in the late 1970's to define critical crack signs for the C-130 aircraft. It permitted selection of inspection times and frequency of intervals based upon aircraft usage and NDE detectable crack sizes to provide structural integrity with a known degree of reliability. This approach to the application of NDE to this fleet has been extremely successful and has not only prevented loss of aircraft, but allowed for the early detection of damage to afford an economic repair.

Related Activities

At the outset, it was acknowledged that a number of related studies and working groups had relevance and overlap with the NDE Working Group of the R&M Study. It was, indeed, fortunate, that some of the members of the NDE (R&M) Working Group either had been and/or are associated with those activities.

The Aerospace Industries Association Subcommittee on NDT/NDI, was chartered in 1973 as a standing committee on all matters relating to NDT/NDI, including specifications. The Q-Tech (Quality Technology) Committee, established in 1978, has focused on NDE as a cornerstone of quality assurance. The Technical Cooperation Program (TTCP) comprising Defense Department representation from the U.S., U.K., Canada, Australia, and New Zealand, initiated a continuing NDE panel in 1980. As a last example, the Joint Technical Coordinating Group (JTCG) on NDI was established in 1980 by the DoD Joint Logistics Commanders (JLC) activity.

The activities of the foregoing groups have various purposes, ranging from coordination of R&D activities to review and revision of standards and specifications.

Task Group Summaries

A. Tanks

Substantial potential exists for the use of NDE in improving reliability and maintainability factors in tank systems. By focusing only on suspension components, track components, and final drive components, in current systems, NDE (e.g., for residual stresses) could effect a major increase in mean-miles-before-failure. For field maintenance and rebuild programs, nondestructive techniques are needed for predicting remaining life of critical components. However, the material property which affects remaining life must first be identified before NDE can be called upon to contribute. There is a long-term opportunity, for sensing by in-situ NDE techniques. A new generation of wear monitors, fatigue monitors, or crack detectors should be developed to increase the time to rebuild to longer intervals with greater confidence.

In future systems, the two basic thrusts in the materials area are track rubber and structural material development with emphasis on the latter being placed on composites. At this time, there is no practical NDE for assessing rubber quality which is considered one of the most critical problems common to both M1 and M60 tanks. The functioning of the whole track depends upon the quality and bonding of road wheel rubber, track shoe rubber, and track pad rubber. The

exploitation of nuclear magnetic resonance (NMR) techniques may solve this problem through appropriate characterization studies. Automatic weld quality inspection and monitoring and the employment of computer-aided ultrasonic and acoustic emission methods in the welding process are promising new developments for welding problems of a wide variety.

NDE technology can play an important role in enhancing the reliability and reducing the life cycle costs of tank systems if it is applied at proper sequences in the production of raw material, in the fabrication process, and during in-service inspection. NDE must be introduced at the earliest possible time in the process; it must be used to control the process, and material defects detected must be evaluated to determine their significance to quality and life cycle service-ability.

B. Fixed-Wing Aircraft

A major focal point for NDE in fixed wing aircraft continues to be in the detection and evaluation of corrosion and associated effects such as stress-corrosion cracking. Portable neutron radiographic methods appear promising for corrosion detection.

9.21

The introduction of the Durability and Damage Tolerance Analysis (DADTA) approach to the design of aircraft and engines by the U. S. Air Force under both the Aircraft Structural Integrity (ASIP) and Engine Structural Integrity (ENSIP) Programs has had a significant impact on the aerospace NDE community. This application of fracture mechanics technology to component design to insure that critical parts will not fail due to undetected flaws has required that NDE procedures be significantly improved and that their ability to detect flaws in critical structures be quantitatively defined. The resulting emphasis on inspection reliability will have an impact on development in this area for many years to come.

Electronic components are beset by high rates of failures and malfunctions in soldered, brazed, and other joints, which generally stem from manufacturing. Present testing is done mainly for the evaluation of electrical characteristics. New NDE methods are needed which can detect parts which are incipiently defective or marginally acceptable, but are likely to cause later problems.

Automated, multi-functional NDE systems are needed for both manufacture and field use. An example of the kind of equipment and methods which would be fruitful is the Capacitance Hole Probe (CHP) which is attached to a robot arm. The equipment is activated after the hole

The equipment is activated after the hole drilling step to measure both hole configuration (strightness, ovality, etc.) and surface condition. The system even has the capability of feedback with diagnostic and corrective features (e.g., to replace a worn or chipped tool. Such equipment is generically useful where many fastener holes will be involved. Cost savings of $20M on the on-going C-5B production run ar projected. There are currently plans for extension of the CHP to other aircraft systems.

NDE of composite materials will continue to be a problem as more and more composites come into use in high-performance aircraft. The use of contoured or three-dimensional parts is retarded because of limited means of manufacturing and NDE. Even where the NDE method can detect voids or delaminations, the problem may be to determine the strength of the bonds in the composite.

C. Rotary-Wing Aircraft

The special characteristics of the helicopter (which has been characterized as a flying fatigue machine) magnify the effects of generic materials and processing weaknesses. These characteristics have fostered a "fail-safe" design philosophy which in turn requires a rigorous approach to materials inspection prior to fabrication, as well as in-process inspection operations, and mandates the need for an equally rigorous maintenance inspection program.

It is recognized that the future helicopter will be tangibly different from those in existence today. In terms of NDE interest, the advanced design of the H 60 series aircraft employs a significant proportion of composite structure (however, still below one-half of the total helicopter structure). The helicopter of the 1990s is expected to comprise 80 to 90% composite structure. As in fixed-wing aircraft, this change will force changes in the present approaches to NDE, in the manufacturing, operational, and maintenance stages, requiring the development of:

* Automated inspection systems and NDE software to address the time-consuming task of 100% inspection of critical areas,

* Techniques and instrumentation for the determination of both bond strength (where there are no voids or cracks) and remaining lifetime in components which have different degradation modes than those of metallic alloys,

* Embedded acoustic sensors to allow continuous monitoring with automatic signal processing during flight, and other sensitive methods which provide early warning of problems in helicopter rotor blades.

New NDE methods to warn of impending failures in gears, bearings and other critical components of drive and engine subsystems are also requirements of future rotary-wing aircraft systems.

D. Ships

The Ships Task Group report represented an unusual management concept which might well be adapted by the other services. The (ship) Systems Maintenance Monitoring and Support Office, involved with extended operating cycles for selected naval combat ships, has evolved a unique capability to:

* Identify in-service problems in ships included in the program,

* Develop methods to monitor for problems (or lack of them) to assure reliability,

* Employ the newly developed methods in relatively short periods of time.

Their capability was enhanced by a charter for a relatively small, well-focused program which permits management control by the same organization from identification of need (e.g., for a new nondestructive examination equipment or technique) to actual placement in service of the equipment or technique required to meet the need.

The equipment placed in service in this program were predominantly available in whole or in part (with modifications) from commercial sources. Navy

9.25

laboratories provided testing, evaluation, and related research and development services and opportunities in order to verify that capabilities of the equipment or techniques met the need specified.

After the introduction of an initial NDE equipment or technique, field use provides new ideas for its employment and for improvement in the equipment itself. It is not unusual to see two or more generations or editions over a three to ten-year period. Broader application reduces cost of introduction in any new weapons system.

An Engineering Group dedicated to a major weapons system monitoring effort, equipped with an automated data base which they control, and supported by skilled Data Collection Groups is in the best position to anticipate problems developing in equipment. Such a group, if also provided with the authority to seek solutions and/or improved monitoring equipment or techniques, is in the best position to minimize the time period from idea to introduction into service of the required "fix."

Over the life cycle of a weapons platform (20-35 years) many factors interact to cause new and

unforeseeable problems. For example, a changed source for procurement results frequently in changed wear and degradation characteristics. To counter adverse characteristics, new monitoring methods and equipment may have to be introduced to detect degradation before reliability (from a mission or safety standpoint) becomes adversely affected. Thus, while it is highly desirable to introduce at the design stage a capability to nondestructively examine components, it is possible that after introduction into service, and well into the life cycle of a weapons system, new nondestructive examination equipment and methods may have to be developed and introduced to support system reliability.

The application of the techniques illustrated in the naval ship case study have the practical effect of increasing the time "on line" of the weapons platforms while sustaining a high level of reliability.

For the future, recognizing the fact that naval ship systems will be expected to perform reliably for extended periods between overhauls, built-in sensors for NDE and other monitoring need to be incorporated in the design phase, especially for areas which are not readily accessible for inspection.

9.27

E. ARMAMENTS

The NDE of armament components focuses upon the building in of quality during the manufacturing phase of items such as large caliber shells, cartridge cases, explosive projectiles, and related components (e.g., stick propellant, other munitions). Typically, these components are manufactured on mass production lines, increasingly on modern automated lines. The intent of product assurance is to aim for the highest probability of preventing critical/major defects from reaching the stockpile by eliminating human interpretation, and utilizing the most effective state-of-the-art automated inspection techniques. Associated requirements are to: provide suitable, real-time quality assessment of products at minimum cost, reduce personnel exposure in hazardous operations, and to prevent compromise of item safety, reliability, and interchangeability.

Automated NDE systems have been incorporated into the production and testing cycles of armament items spanning from initial production to final ballistic acceptance testing. Such automated systems provide feedback loops which monitor the process parameters continuously and keep them within tolerance. With greater inspection reliability and closer process

control, rework and scrap costs can be minimized. Examples of how Army product assurance operations have already begun to implement this philosophy throughout the critical portions of the life cycles of armament components have included:

- Automated magnetic flux leakage technique to evaluate M42/M46 grenades
- Automated inspection of small caliber cartridge cases
- Automatic nondestructive density determination of explosive projectiles

Among other tangible ROI opportunities are development of:

- Automated real-time x-ray inspection system to monitor warheads
- Generic residual stress measurement methods for gun tubes
- Image processing (computer-based) techniques for use in automated NDE systems

F. DEVELOPING AND EMERGING NDE

Dramatic improvements have been realized in the ability of new NDE methods and equipment to achieve ever higher sensitivity and discrimination in recent years. This has been achieved through:

- Exploitation of different physical phenomena (other than x-ray, ultrasonic, etc.), such as neutron radiography

- Advances in signal detection

- Improvements in data conversion, enhancement, and analysis

For example, Vibrothermography, a highly sensitive infrared NDE technique, which, when combined with cyclic loading of composite components (such as a helicopter rotor blade), can detect minute temperature increases. The signal enhancement in color, combined with a mapping technique, can pinpoint incipient trouble spots for subsequent monitoring, repair, or replacement.

Nuclear magnetic resonance (NMR) shows promise for inspection of homogeneity of a variety of weapon system components, ranging from rocket motor propellant billets to tank track pad rubber.

Other important trends can be found in the example of the Capacitance Hole Probe which is multi-functional (it not only detects flaws in the surfaces of drilled holes, but also assesses straightness and ovality), can be programmed to analyze and correct itself (e.g., it can replace a worn or chipped tool bit automatically), and can be incorporated into an arm of a robot for production operations.

A multitude of new NDE requirements, such as the reliable measurement of residual stresses in weldments and munitions, and the determination of bond strength and remaining life in composites and rubber, coupled with a solid record of important advances in recent years by the NDE community (which have yielded high return on investment), justify strong expansion of R&D support of developing and emerging NDE techniques and instrumentation.

G. GENERIC PROBLEM AREAS AND OPPORTUNITIES

A number of problem areas, common to each of the task groups (and probably to the reliability and maintainability of DoD weapon systems generally) can be grouped into four areas:

- O Data Base Problems
- O Reference Documentation Problems
- O Manpower and Other Personnel Issues
- O Management Issues

1. DATA BASE PROBLEMS

The data base issues encountered in this study dealt with the accuracy and timeliness of accounting for deficiencies. Field categories for the listing of deficiencies should be improved, since too many vague causes are now highlighted. It is also recognized that detailed examinations for root causes of many deficiencies can be done only by specially trained

9.33/1

engineers who are skilled in stress and failure analysis, manufacturing processes, corrosion, etc. with specialized equipment. The major features of record keeping at depot level should include a computerized, day-by-day updated data system. The prompt application of data reduction techiques and trend or other analysis techniques to identify and correct impending problem areas before they become critical or chronic is absolutely essential for enhanced reliability and maintainability of weapons systems.

2. REFERENCE DOCUMENTATION PROBLEMS

Up to a few years ago, specifications and standards for NDT proliferated to a point of serious redundancyand a body of literature was also obsolete NDT documentation has tended to fall into two categories, one involving technique documents (including inspection manuals) which describe how to perform inspections consistently and accuractely which can be used to develop accept/reject criteria for specific applications or components.

Within industry, through organizations such as AIA, and within DoD, through tri-service activities initiated by the Joint Logistics Commanders (JLC), there have been

drives toward commonality of specifications and standards. Reliability and maintainability can be enhanced by eliminating the number of conflicting specifications for each NDE classification such as x-ray,ultrasonic, etc. methods. There is also movement toward eliminating standards which are no longer in use. Concurrently, changes which reflect the advancing state-of-the-art, involving modern concepts such as fracture mechanics criteria (which help to set requirements for sensitivity) and the coupling of automated equipment (e.g., with signal enhancement, mapping capabilities) need to be incorporated into accepted inspection practices.

In a similar vein, NDE manuals need concerted attention, to:

- Assure that they are developed early in weapons system development,
- avoid the design of systems which are based on unrealistic/unachievable NDI capability (also, incorporate embedded sensors in inaccessible areas), and to
- assure proper development and DoD validation by appropriate personnel.

NDE manuals must also be continuously updated throughout the life of a system to incorporate new operating spectra (of stress, environment, etc.) or unforeseen problems.

Although the trends toward elimination of redundant specifications and standards, updating, etc., are in the right direction, more concerted attention and funding suuport need to be devoted by both DoD and industry to these issues.

3. MANPOWER AND OTHER PERSONNEL ISSUES

Present day needs of existing weapons systems in NDE are heavily focused at the field and depot levels. Thus, the training and qualification of skilled personnel, with appropriate aptitudes, provided with up-to-date equipment and clearly developed inspection manuals and standards are essential to improved reliability.

For future weapons systems, the trend must clearly be toward expansion of automated/computerized NDE systems. Reducing the dependency on repetitive human motion and discrimination can increase detection capability by an order of magnitude.

For field and depot level NDE, the human factors which identify capable, effective NDI personnel need further exploration, and special salary scales to retain qualified, trained personnel should be studied.

Updated training concepts for both DoD and industrial personnel should incorporate practical, hands-on experience with the latest state-of-the-art inspection equipment, complete with advanced signal processing and data reduction paraphernalia.

4. MANAGEMENT ISSUES

Many of the foregoing sections have involved management decisions which have improved or worsened reliability and maintainability of DoD systems. As in all instances where performance and operational integrity of mechanical, electrical, structural, etc. systems are concerned, the introduction of new technology of increasing sophistication, complexity, and cost has brought demands for both awareness and action of management to anticipate new requirements associated with inspection and monitoring technologies such as NDE.

As examples of how management can ease the way for high ROI from NDE implementation, four major areas of opportunity are offered:

- OSD needs to be sensitized to the establishment and support of NDE Advisory Boards for each major weapon system.

- A central authority in OSD should be established for NDE and other condition and performance monitoring activities, which crosses boundaries of RDT&E, manpower, logistics, and other pertinent elements.

- Barriers to the implementation of new NDE and/or NDE to address changing requirements need to be circumvented through pre-planning by designers, NDE Advisory Boards, and involvement of production engineering, manufacturing technology, quality assurance, and maintenance experts early in the life cycle of weapon systems.

- New organizational structures to enhance high reliability and maintainability at low cost should be considered by the services. The example of the organizational structure,

authority responsiveness, and effectiveness of the Systems Maintenance Monitoring and Support Office of NAVSEA should be closely examined by the other Services as a possible model to emulate.

9.33/7

NDE PERSONNEL SELECTION, TRAINING, AND QUALIFICATION
NDE INSPECTION MANUAL

RECOMMENDATIONS		FOR USE IN	GATEKEEPER ACTION REQ'D	COST & TIME REQ'D TO IMPLEMENT	READINESS IMPACT (ROI)
Scientifically establish personnel minimum aptitude, experience, and human factor standards for NDE trainees	All systems requiring NDE	Field Depot Production	JTCG-NDI (Personnel Subgroup) / OSD for DODI OSD, Industry (As Applicable)	1 year Med	↑Manpower Effectiveness (Approximately 35%) ↑Inspector Proficiency (Approximatey 45%)
Establish a mandatory periodic certification (with corresponding incentives) for all NDE personnel	All systems requiring NDE	Field Depot Production	JTCG-NDI (Personnel Subgroup / OSD for DODI	2 years Med	↑Manpower effectiveness (Approximately 30%) Mandatory, Recurring training and personnel evaluation Personnel Placement Management Tool
Practical, hands-on approach to training complemented with state-of-the-art equipment	All systems requiring NDE	Field Depot Production	JTCG-NDI (Personnel Subgroup / OSD for DODI	Est: annually - 1 yr to implement Low	↑Inspector proficiency (Approximately 40%) ↓On-the-job-training (Approximately 20%)
Establish and enforce an NDE Inspection Manual, (-9,-26,-36), MIL-STD Program for DOD-wide application	All new systems requiring NDE	Field Depot Production	JTCG-NDI (Sepcs & Stds. Subgroup) / OSD for DODI	1 yr to implement Low	Consistent NDE on Joint Service Systems ↑Operational Readiness (Approximately 45%) ↓Downtime and inspection cost (Approximately 35%) ↑Mission Effectiveness (Approximately 30%)
Establish and support NDE Advisory Boards for each major weapon system	All new major weapon systems	Development Production Depot Field	MAJCOM Directives Specific DOD Agency Regulations / OSD for DODI	Low Cost 1-2 yrs to implement Low	Early NDE consideration in weapon system development ↑Mission Effectiveness (Approximately 30%) ↑Documentation Quality (Approximately 40%)

KEY:
Low $0-2M
Med $2-5M
High $5 + up

SPECIFICATIONS AND STANDARDS

RECOMMENDATIONS	TARGET PROGRAM	FOR USE IN	GATEKEEPER & ACTION REQUIRED	COST & TIME REQUIRED TO IMPLEMENT	READINESS IMPACT (ROI)
Establishment of Common Specifications and Standards in Generic Areas	General	Production Field Depot	DMSSO Increased Funding	M	Eliminate Redundant Standards and Specifications Reduction of Overall Number

NDE DATA BASE

RECOMMENDATIONS	TARGET PROGRAM	FOR USE IN	GATEKEEPER & ACTION REQUIRED	COST & TIME REQUIRED TO IMPLEMENT	READINESS IMPACT (ROI)
Expand and update field service data system. Apply data reduction techniques (trend analysis, etc.) to identify and correct problems	All Systems	Field Depot	Air Force SPO Navy PMA Army PM	$3M-2 yrs	↑ Operational Readiness) 10% ↓ Cost of Repair and Replacement) High ↓ Spare Parts High

TASK GROUP: TANKS

RECOMMENDATIONS	TARGET PROGRAM	FOR USE IN	GATEKEEPER & ACTION REQ'D	COST & TIME REQUIRED TO IMPLEMENT	READINESS IMPACT(ROI)
1. Develop System For Monitoring Rubber Material Properties	M1/M60	Production	DARCOM PMs-M1/M60	M	Cost of Replacement ↓ Greater Readiness ↑ Spare Parts ↓
2. Develop Method to Determine Rubber to Metal Bond Strength	M1/M60	Production Rebuild	"	M	"
3. Refine & Implement X-Ray Diffraction and other Techniques to Measure Residual Stresses in Armor Plate, Torsion Bars, and Track Pins	M1/M60	"	"	M	Fatigue Life ↑ 10% Spare Parts ↓ 10% Operational Readiness ↑
4. Implement Basic NDE at Depot Rebuild for Critical Components	M60 (Current) M1 (Future)	Rebuild	"	$5M M	Repair & Replacement Cost ↓ Operational Readiness ↑
5. Develop & Implement Weld Inspection Capability of Acoustic Emission, Computer-Aided Ultrasonic, & Weld Quality Monitoring Systems	M1 and other Tank Mods	Production & Rebuild	"	AE - $2M UT - $1-2M WQM - $2M M	Mission Effectiveness ↑ Manufacturing Cost ↓

TASK GROUP: FIXED-WING AIRCRAFT

RECOMMENDATIONS	TARGET PROGRAM	FOR USE IN	GATEKEEPER & ACTION REQUIRED	COST & TIME REQUIRED TO IMPLEMENT	READINESS IMPACT (ROI)
Corrosion Detection	Multi-system	Field, Depot	AFWAL/ NAVAIR	$15M-5yr	↓ Downtime ↑ Operational Readiness ↓ Insp. Time and Costs $2B/yr
NDE of Electronics (e.g., IR)	Multi-system	Production, Field, Depot	AFWAL/ NAVELEX/ AMMRC	$1M-2yr	↓ Repair & Replacement ↑ Mission Effectiveness ↓ Spare Parts 30%
NDE of Composite Materials	AV8B, F-18, F-15, F-16, Multi-system	Production, Field, Depot	AFWAL/ NAVAIR	$10M-4yr	↓ Downtime & Costs ↓ Repair & Replacement ↓ Manpower ↑ Insp.Proficiency High
Improved Conventional NDI Equipment	Multi-system	Production, Field, Depot	AFWAL/ NAVAIR/ AMMRC	$5M-5yr	↓ Downtime & Insp. Costs ↑ Inspector Proficiency High
Filmless Radiography	Multi-system	Production, Field, Depot	AFWAL/ NAVAIR/ NSWC/ AMMRC	$6M-4yr	↓ Downtime & Insp. Costs ↓ Cost by 50% Radiography
Automated Inspection Systems	Multi-system	Production, Field, Depot	AFWAL/ NAVAIR/ AMMRC	$25M-5yr	↓ Downtime & Insp. Costs ↑ Inspector Proficiency Very High

TASK GROUP: ROTARY-WING AIRCRAFT

RECOMMENDATIONS	TARGET PROGRAM	FOR USE IN	GATEKEEPER & ACTION REQUIRED	COST & TIME REQUIRED TO IMPLEMENT	READINESS IMPACT (ROI)
Incorporate automated ultrasonic inspection of composite structures and components	UH-60 AH-64 JVX LHX	Production, Depot	DARCOM Blackhawk PM AAH PM NAVAIR AFWAL	$1M-2M	100% inspection of critical areas Cost of repair ↓ (10%) Cost avoidance: ↓ Spares (15%) ↓ Manpower (5%) ↑ Operational readiness (10%)
Automated NDT software	All programs	Production, Depot	DARCOM	$1M	↓ Cost reduction (20%)
Develop N-Ray tube system for real time composite structure inspection	AH-64 JVX LHX	Depot	DARCOM AAH PM	$1-5M	Cost avoidance: ↓ Spares (15%) ↓ Manpower (5%) Cost of repair ↓ (10%)
Embedded acoustic sensors	All helicopter rotor blades	Field	DARCOM (AVSCOM) Blackhawk PM Seahawk PM Nighthawk PM	$1-5M	↑ Operational readiness Cost avoidance: ↓ Spares (10%) ↓ Manpower (20%)
Computerized trend analysis of maintenance NDI applications	UH-60 AH-64 JVX LHX	Design, Program Management	DARCOM AAH PM	$1-5M	Cost avoidance (30%) ↑ Operational readiness ↓ Spare parts (30%)

TASK GROUP: SHIPS

RECOMMENDATIONS	TARGET PROGRAM	FOR USE IN	GATEKEEPER	COST AND TIME REQ'D TO IMPLEMENT	READINESS IMPACT (ROI)
Include in design of new ships those features which make it easier to monitor system performance over the life cycle, particularly in those areas which are, in current designs, inaccessible in the field for examination (e.g., embedded NDE sensors).	All new designs	Field, Depot	NAVSEA	High	Reduce time in depot level (shipyard overhaul) and cost of repairs required throughout ship life cycle.
Create new contracting initiatives which make it easier for industry to participate in applying or testing their available equipments to solve problems identified in Weapons Systems Platforms.	Various	Field, Depot	Various. Recommend OSD take for action.	High, overall; Low on an individual program basis.	Will shorten time from identification of need to introduction of NDE equipment and methods to meet this need, in order to improve or at least "hold the line" on reliability degradation.
Create incentives which make it possible for services to implement the mid 70's OSD Mandate for "Reliability Centered Maintenance" in a meanful way.	All "High Cost" Weapons Projects.	Field, Depot	OSD	High	Gains such as those achieved through Ship Systems Performance Monitoring (which is a Reliability Centered Maintenance type of program) may be achieved.
For each major weapons system or type of vehicle, establish a dedicated performance monitoring program.	All "Major-High Cost	Field	All Services	High	Same as above.

6.100

TASK GROUP: DEVELOPING AND EMERGING NDE

RECOMMENDATIONS	TARGET PROGRAM	FOR USE IN	GATEKEEPER & ACTION REQUIRED	COST & TIME REQUIRED TO IMPLEMENT	READINESS IMPACT (ROI)
Develop Automated Real-Time X-Ray Inspection System for Mortar Warheads	4.2 in and 81 mm mortars	Production	DARCOM	Medium	$438,000 savings/yr (14%)
Develop Image Processing Techniques for Use in Automated NDE Systems (Computer Techniques)	All NDE Applications	Production	DARCOM	Medium	Reduction in costs for development of automated NDE systems. Estimated $120,000/yr savings
Develop Automatic Compton Scattering Inspection System	Large Caliber Munitions	Production	DARCOM	Medium	Cost & hazard avoidance One reduced Gov. Liability ($1,000,000 settlement). Reduction in cost of inspection by $325,000/yr.
Develop Photothermal Imaging for Coating Inspection	All Coatings	Production	NAVY	Low	Cost savings hard to assess
Develop NMR Imaging Devices	Track Pad Rubber, Bare Charge such as Navy Breaker 5" - 54	Production	DARCOM NAVSEA	Medium	Reduction in cost due to removal of film. Reduction in spare parts requirements. Avoidance of failure

TASK GROUP: DEVELOPING AND EMERGING NDE (2)

RECOMMENDATIONS	TARGET PROGRAM	FOR USE IN	GATEKEEPER & ACTION REQUIRED	COST & TIME REQUIRED TO IMPLEMENT	READINESS IMPACT (ROI)
Develop noncontact ultrasound generation and acoustic emission techniques (laser generation)	Metal parts for large items Structural integrity of aircraft	Production	DARCOM AIR FORCE	Medium	Cost avoidance due to reduced malfunctions because of metal parts defects
Develop methods to measure residual stress (Mössbauer spectroscopy, positron annihilation)	Gun tubes, tank parts	Production	DARCOM PM	R&D Needed	
Fund testing technology research and development in areas such as: 1. Quantification of perfect classification in automated real-time radiography, ultrasonic and eddy current techniques; 2. Development of generic residual stress measurement techniques; 3. Nondestructive methods for testing charcoal filters; 4. Use of robots for NDE application; 5. Use of NDE information for process control on automated production lines; 6. Detailed description of bond strength to support NDE inspection methods	1. Inspection of HE in large caliber shell 2. Stress measurements in gun tubes 3. Nondestructive testing of gas masks 4. Inspection of weldments for tanks 5. Aircraft bonding	Production	ARMY AIR FORCE NAVY	Medium	Cost avoidance due to malfunction reduction Reduced costs for implementation of NDE techniques Reduction in personnel costs by automation and use of robots

III. INTRODUCTION

A. NDE And Its Applications

During the past thirty years, nondestructive testing has evolved from widespread use in methods such as industrial radiography for determining voids and other defects in castings to much more sophisticated techniques such as scanning photoacoustic microscopy for detecting flaws in intergrated circuits, and vibrothermography for the delineation of weak points which may lead to failure of composite materials.

Although the purist may distinguish between NDI (nondestructive inspection), NDT (nondestructive testing), and NDE (nondestructive evaluation), we shall refer to these interchangeably throughout the report, since much of the information gained in present and future DoD systems is coupled to quantitative standards of flaws, gradients, etc. Thus, testing is intrinsically connected with evaluation.

The area of NDE has many facets and is called by different names. In its broadest context, it has to do with the characterization of materials. In earlier years, NDE dealt almost exclusively with structural behavior, with concern for cracks or corrosion which could lead to failure of a machine part or structure. In modern times, NDE extends to focus on detection of low levels of defects in electronic, magnetic, and optical materials, key factors in the reliability, reproducibility, and

maintainability of devices used for radar, guidance, control, and sensing. However, the bulk of the applications for NDE within the DoD are still in structural areas, and the report of this study reflects this emphasis.

The techniques and equipment which have been classicially used in the past in NDE have included x-ray radiography, magnetic particle, penetrant, eddy current, and ultrasonic methods. In more recent years, sophisticated methods have emerged which have been based upon acoustic, thermal, and optical concepts. This study addresses those methods as well. All NDE methods have limitations as well as advantages and, therefore, must be used judiciously with a thorough understanding of the material and component to be inspected.

Historically, designers have used published material property data such as strength, ductility, and fatigue life to match up materials with service performance requirements and the defects that were detected by NDT were accepted or rejected on the basis of fear rather than knowledge. But with the advent of fracture mechanics, a material's fracture characteristics are now also used as major design considerations. We can calculate critical flaw size or the largest flaw a material can sustain without fracture when subjected to design stresses and environmental conditions. Therefore, in order to produce hardware to fracture control design criteria, it is only necessary to assure that the hardware contains no flaw approaching critical size and it is at this point where nondestructive testing is called upon to contribute.

The preceding generalization is rather simply stated and sounds straightforward, but its implementation is somewhat more complex when one considers the variables which can affect quantitative NDE results. They include the material, its condition or processing history, the geometry of the component with respect to accessibility to probing energy of the critically stressed area where defect detection is essential, the types of defects anticipated, and, probably most important, defect orientation. In order to be effective, NDE must be involved in the initial stages of design and materials selection and even materials development.

It is the task of NDE personnel to devise techniques for measuring materials properties and for detecting flaws. However, the task of improving performance, extending life, or guaranteeing reliability has to be a joint undertaking involving the designer and fracture mechanics engineer, the materials engineer concerned with materials characterization and processes, the NDE engineer who must be involved at the start before specimens are tested or destructive sectioning is performed, the production personnel who manufacture materials and parts, and the maintenance personnel who inspect for areas of potential problems and take preventive and/or corrective action. To assume that fatigue specimens or fracture toughness specimens are ideal, homogeneous, flaw-free materials may be misleading. The real materials we make into hardware are variable in properties and all contain defects or imperfections of some size and distribution. Although some defects have no influence on

service behavior, they should be considered suspect until proven irrelevant. Knowledge of test specimen condition (variability) or defect location gained through NDE prior to testing may very well account for data scatter experienced in many cases. If an inter-disciplinary group effort is able to identify the significant defects which do indeed occur for a new materials and design, then the use of NDE which can find these defects is paramount, not only during production fabrication, but for pre-service inspections as well as later in-service inspections for critical components which undergo cyclic loading in service.

The advent of complex DoD systems, embodying demands for high reliability under adverse operating conditions and/or after long periods of storage, require fresh concepts in the NDE arena.

In relation to the other working groups within the overall R&M study (Fig. 1), there are obvious overlaps between the activities of the NDE Group and those of several of the others, especially Mechanical Systems Condition Monitoring, Testing Technology, Diagnostics, Structural Composites, and Intergrated Systems of Manufacture. Through discussions with the Chairmen of several of the Groups and through the meetings of the Technology Steering Committee, other areas of common concern, e.g. on manpower and training issues, were coordinated. Through this coordination, major trends and issues became more clear for the entire study.

ORGANIZATION -- TECHNOLOGY WORK GROUP

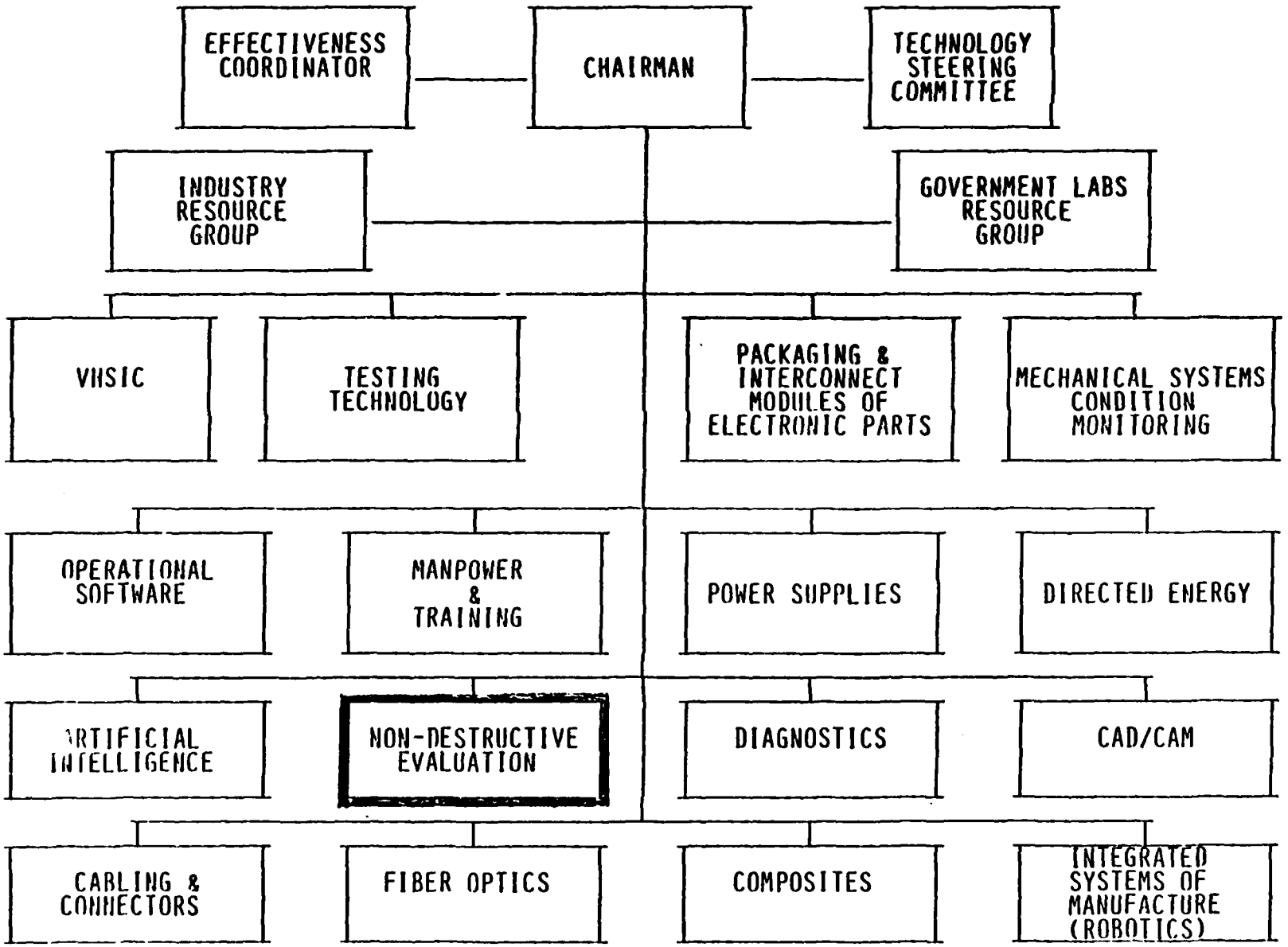

49/3

III. B. MAKE-UP OF THE COMMITTEE

The NDE Working Group membership represented a wide diversity of backgrounds, from academia to industry to the services, and brought many cumulative years of experience in and insights of the field of nondestructive evaluation. Their collective experience ranged from basic research to development, production, quality control, maintenance, standards and specifications, and training of personnel. Many others in the services, in industry, and in universities cooperated in providing data, written material, and photographs.

9.10

NON-DESTRUCTIVE EVALUATION TECHNOLOGY WORKING GROUP

CHAIRMAN:	Dr. George Mayer, Director Metallurgy & Materials Science Division P. O. Box 12211 Research Triangle Park, N.C. 27709	ARO
MEMBERS:	Mr. Francis E. Alloway General Dynamics 1161 Buckeye Road Lima, Ohio 45804	General Dynamics
	Dr. Joseph M. Argento U.S. ARRADCOM ATTN: DRDAR-QGS-T Bldg 62 Dover, N.J. 07801	Army
	Mr. George M. Behnen U.S. Army Avn R&D Command ATTN: DRDAV-QE 4300 Goodfellow Blvd St. Louis, MO 63120	Army
	Major John Breland HQ AFSC/DLF Andrews Air Force Base Washington, D.C. 20334	Air Force
	Mr. John T. Conroy US Army Avn R&D Command ATTN: DRDAV-QE 4300 Goodfellow Blvd St. Louis, MO 63120	Army
	Dr. Thomas Cooper AFWAL/MLSA Wright Patterson AFB, OH 45433	Air Force
	Chief Master Sergeant John F. Dorgan SA-ALC/MMEI Kelly AFB, TX 78241	Air Force
	Mr. Paul Finn Sikorsky A/C No. Main Street Stratford, CT 06418	Sikorsky

NON-DESTRUCTIVE EVALUATION TECHNOLOGY WORKING GROUP, Continued:

MEMBERS:	Dr. Robert E. Green Dept. of Civil Engineering/ Materials Science & Engineering The Johns Hopkins University Baltimore, MD 21218	Johns Hopkins Univ.
	Mr. Harold Hatch Office of the Director, AMMRC ATTN: DRXMR-STN Watertown, MA 02172	Army
	Mr. J. C. Herr General Dynamics P. O. Box 748, MZ 6620 Fort Worth, TX 76101	General Dynamics
	Mr. Chester T. Kedzior Product Assurance Dir US TACOM ATTN: DRSTA-QAT Warren, MI 48090	Army
	Mr. Daniel Lacedonia Hamilton Standard Div of U.T.C., Mail Stop 1-3-7 Windsor Locks, CT 06096	Hamilton Standard
	Mr. W. H. Lewis Dept 72-54 Z.415 Lockheed Georgia Co. Marietta, GA 30063	Lockheed
	Mr. Harry L. Light HQ DARCOM ATTN: DRCQA-EQ 5001 Eisenhower Avenue Alexandria, VA 22333	Army
	Mr. Jack Nicholas, Jr. Naval Sea Systems Command (NAVSEA) USNB Washington, DC 20374	Navy
	Major Lonnie D. Phifer, III SA-ALC/MMEI Kelly AFB, TX 78241	Air Force
	Mr. Michael L. Stellabotte Code 606C Naval Air Development Center Warminster, PA 18974	Navy

III.C. RELATED STUDIES AND OTHER ACTIVITIES

1. AIA Subcommittee on NDT/NDI

The Aerospace Industry Association has formed a working subcommittee on Non-Destructive Testing/Inspection (NDT/NDI).

The objectives of the AIA QAC working subcommittee are:

1. To provide a forum within AIA for the exchange of information between its members and for the discussion of issues relating to NDT/NDI between government and industry.
2. To strive actively, through dialogue, to influence the focus and content of customer standards, regulations and procedures.
3. To provide an effective vehicle for consolidating and presenting Industry concerns and requirements on government NDT/NDI requirements to the cognizant government agencies.
4. To promote the use of common standards for NDT/NDI and their continued improvement.
5. To support effective and economical implementation of NDT/NDI programs by industry.

This common framework will/does improve R&M by facilitating implementation of specifications and standards, quick responses, ability to discuss problem areas on a face-to-face basis with originators of various specifications, standards, etc.

The attached viewgraphs summarize the key activities of this working subcommittee.

It is recommended that this type of working subcommittee be used in other generic type industries such as ship building, heavy vehicles, small arms etc.

58/4-6

A. I. A. SUBCOMMITTEE #4-NDT/NDI

CHARTER

THE QUALITY ASSURANCE COMMITTEE CHARTERED THE SUBCOMMITTEE ON 17 SEPTEMBER 1973 "TO ACT AS THE FOCAL POINT FOR THE QUALITY ASSURANCE COMMITTEE ON ALL MATTERS RELATED TO NDT/NDI." PARTICULARLY AS PERTAINING TO SPECIFICATION REVIEW.

SUBCOMMITTEE #4 - NDT/NDI

OTHER TASKS

1. LIAISON HAS BEEN FORMALLY ESTABLISHED AND IS BEING MAINTAINED WITH: ASNT TECHNICAL COUNCIL, ASTM E-7 NDT COMMITTEE, NAVY, ARMY AIR FORCE, SUBCOMMITTEE #2 AND OTHERS.

2. THE SUBCOMMITTEE FREQUENTLY ACTS AS A "QUICK RESPONSE" AVENUE ON NDI QUESTONS FOR QAC.

3. THE SUBCOMMITTEE PROVIDES AN AVENUE FOR TECHNICAL PROBLEM SOLVING, AS A GROUP OR BETWEEN INDIVIDUAL MEMBERS.

SUBCOMMITTEE #4 - NDT/NDI

COMPANY REPRESENTATION

---

* AIRESEARCH - GARRETT
* AEROJET STRATEGIC PROPULSION CO.
* BELL HELICOPTER TEXTRONIC INC.
* BOEING - AEROSPACE
* BOEING - COMMERCIAL DIV.
* GENERAL DYNAMICS - FT. WORTH
* GENERAL DYNAMICS - POMONA
* GENERAL DYNAMICS CONVAIR - SAN DIEGO
* GENERAL ELECTRIC - AIRCRAFT ENGINE
* GENERAL ELECTRIC - PITTSFIELD
* GENERAL MOTORS - ALLISON
* GRUMMAN AEROSPACE CORPORATION
* HERCULES - MAGNA
* HUGHES AIRCRAFT
* LOCKHEED - CALIFORNIA
* LOCKHEED - GEORGIA
* LOCKHEED - MISSILES/SPACE
* MARTIN MARIETTA - DENVER
* MARTIN MARIETTA - ORLANDO
* MCDONNELL DOUGLAS CORP. - LONG BEACH
* MCDONNELL DOUGLAS - ST. LOUIS
* NATIONAL WATER LIFT CO.
* NORTHROP - AIRCRAFT DIV.
* RATHEON - MISSILES
* ROCKWELL INTERNATIONAL - LOS ANGELES
* ROCKWELL - TULSA
* SUNSTRAND - ROCKFORD
* THIOKOL - HUNTSVILLE
* TRW - REDONDO BEACH
* UNITED TECHNOLOGIES CORP - HAMILTON STANDARD DIV.
* VOUGHT CORPORATION

NONDESTRUCTIVE TEST AND RELATED SPECIFICATION

PROJECTS UNDERTAKEN BY THE A. I. A. SUBCOMMITTEE #4 - NDT/NDI -

14 SPECS UNDERTAKEN IN 9 YEARS

12 COMPLETED

2 CURRENTLY BEING REVISED

NONDESTRUCTIVE TEST AND RELATED SPECIFICATION

PROJECTS UNDERTAKEN BY THE A. I. A. SUBCOMMITTEE #4 - N D T/N D I

N D T SPECS

MIL-STD-2154

MIL-STD-1537

MIL-STD-867

MIL-STD-410

MIL-STD-00453

MIL-I-6868

MIL-I-6870

MIL-R-81080

MIL-I-25135

MIL-I-6866

NAS 999

RELATED SPECS

MIL-STD-1595

MIL-H-6088

MIL-W-6858

NDT SPECIFICATIONS COMPLETED

MIL-STD-2154 *9/30/82*
INSPECTION, ULTRASONIC, WROUGHT METALS PROCESS FOR
SUPERSEDING
MIL-I-8950 B 9/18/68
INSPECTION, ULTRASONIC, WROUGHT METALS PROCESS FOR

MIL-STD-1537 A 6/24/81
ELECTRIC CONDUCTIVITY TEST FOR MEASUREMENT OF HEAT TREATMENT OF ALUMINUM ALLOYS, EDDY CURRENT METHOD

NAS - NATIONAL AEROSPACE STANDARD - 999 3/81
NONDESTRUCTIVE INSPECTION OF ADVANCED COMPOSITE STRUCTURES

MIL-I-6868 E 6/6/80
INSPECTION, PROCESS MAGNETIC PARTICLE

NDT SPECIFICATIONS COMPLETED

MIL-I-6870 E *8/29/79*
INSPECTION PROGRAM REQUIREMENTS, NONDESTRUCTIVE FOR AIRCRAFT AND MISSILE MATERIALS AND PARTS

MIL-STD-867 A 3/23/79
TEMPER ETCH INSPECTION

MIL-STD-00453 B 3/31/77
INSPECTION, RADIOGRAPHIC

MIL-STD-410 D 7/23/74
NONDESTRUCTIVE TESTING PERSONNEL QUALIFICATION AND CERTIFICATION

MIL-R-81080 5/26/74
RADIOGRAPHIC INSPECTION, QUALITY LEVELS FOR - CANCELLED

RELATED SPECIFICATIONS COMPLETED

MIL-STD-1595 A 2/26/82
QUALIFICATION OF AIRCRAFT, MISSILE AND AEROSPACE FUSION WELDERS
SUPERSEDING
MIL-STD-5021 D 2/1/68
TESTS: AIRCRAFT AND MISSILE WELDING OPERATOR'S QUALIFICATION

MIL-H-6088 F 7/21/81
HEAT TREATMENT OF ALUMINUM ALLOYS

MIL-W-6858 D 3/28/78
WELDING, RESISTANCE: SPOT AND SEAM

NDT SPECIFICATIONS CURRENTLY UNDER REVISION

MIL-I-25135 C 10/21/79
INSPECTION MATERIALS. PENETRANT

MIL-I-6866 B 1/30/69
INSPECTION. PENETRANT METHOD OF

2. Quality Technology (Q-Tech)

In 1978, the Air Force Systems Command requested the Aerospace Industries Association of America (AIA) and the National Security Industrial Association (NSIA) to undertake an 18-month study to address the perception within the Air Force and Industry that the availability of quality and reliability assurance methodology was not keeping pace with the development and implementation of advanced engineering and manufacturing processes.

The Committee's findings verified the absence of parity between product assurance technology and manufacturing methods. This imbalance was attributed to a lack of concerted development of quality assurance technology by any sector. Specific recommendations were made to: (1) increase administrative emphasis, (2) enlarge technology development programs, (3) increase level of funding, and (4) identify high payback projects in key problem areas for immediate application to current A.F. programs.

The importance of non-destructive evaluation was specifically emphasized in the committee's report. About 50% of A.F. quality assurance related technology dollars are spent on it. It is the only technology with an organizational entity dedicated to its pursuit. Of the 40 new quality technology projects proposed by industry for committee review, 19 were on non-destructive technology.

The committee specifically recommended that a portion of all A.F. manufacturing technology (Man-Tech) program dollars be designated for developing parallel quality technology (Q-Tech). The first program so funded was in NDE, "Advanced Non-Film X-Ray Inspection Methods".

58/4-7

3. The Technical Cooperative Program (TTCP) Sub-Group P Materials, Technical Panel 5 - Non-Destructive Evaluation (NDE)

TTCP is a formal, government to government, cooperation program between the U.S., UK, Canada, Australia, and New Zealand. It is designed to foster information exchange and joint programs in basic research and exploratory development. Sub-Group P addresses the spectrum of materials development and processing through 5 technical panels: (1) Metals, (2) Ceramics, (3) Organics, (4) Material Performance in Systems and (5) Non-Destructive Evaluation.

The Panel on NDE was established in 1980 at the request of all member-countries. The benefits of this technology are being recognized by all, both for maintenance of current systems and as a necessity for the newly developing advanced materials of the future. As the newest panel, its cooperation program is still being formulated. However, this area is expected to grow rapidly and assume a major position in the overall cooperative program. It addresses common problems, each country has specific technical expertise, and benefits are of major importance to all.

58/4-8

III.C.4. JOINT TECHNICAL COORDINATING GROUP ON NONDESTRUCTIVE INSPECTION (JTCG-NDI) OF THE JOINT LOGISTICS COMMANDERS (JLC)

On 24 September 1980 the JLC established the JTCG-NDI to provide continuing emphasis on improvements of nondestructive inspection (NDI) capabilities in the JLC and through the Services, and to review and take necessary actions on joint Service specifications and standards, personnel management, equipment development and acquisition, and life cycle requirements in the NDI area.

The JTCG-NDI is:

- Coordinating NDI research, development, and manufacturing and quality technology programs
- Reviewing NDI military specifications, standards, handbooks, and other standardization documents for their adequacy, timeliness, conflicts, possible consolidation of military specifications, and use of applicable private sector documents
- Developing a joint systems life cycle guide on NDI applications which will include information on NDI program requirements, materials and defect characterization, specifications and standards, NDI test methods, structural integrity, maintenance, manufacturing producibility, and production quality assurance
- Investigating the joint Service management of NDI military and civilian personnel acquisition, training, certification and recertification, and career field management

59/15-1

- Evaluating impediments hindering rapid transition of NDI developments to the field which relate to organizational structure, policy and procedures, budgeting, and program direction for hardware development
- Developing procedures to maximize joint procurement of common NDI equipment and supplies and joint evaluation of new-on-the-shelf and commercial equipment for meeting NDI requirements.

59/15-2

D. ORGANIZATION OF TASK GROUPS AND SELECTION OF OTHER RELATED TOPICS

Early discussions focused upon the outline of issues which would be addressed in the NDE study, the systems which were impacted, and the product expected. These are shown on following pages.

Central to the theme of the study was the concept of taking what has been learned in NDE of a variety of existing systems and extending those lessons to new generations of DoD systems. To provide a sampling of tri-service systems, the elements selected for Task Group study included NDE of tanks, rotary-wing aircraft, fixed-wing aircraft, and submarines. Subsequently, a study of NDE in armaments was added.

In the early deliberations of the Committee, several other areas were quickly highlighted for further attention. These included:

1. Attention to improving the data base by means of proper interpretation and classification of deficiencies and other problem areas.

2. The selection, training, and qualification of personnel warranted special attention because of historically large variability in interpretation of results and a variety of other problems relating to manpower.

Though it could not be addressed at length, there is another aspect to the training and qualification problem which involves the training of personnel such as design engineers, quality

assurance specialists, etc., who have the responsibility for establishing valid acceptance criteria, the most efficient NDT method to perform the required inspection, and the documents which must be followed to assure accurate and consistent inspection. Obviously, mistakes made at the requirements phase of the inspection cycle can reduce product reliability and make the job of the NDT technician more difficult. Unfortunately, training programs and requirements for these personnel are more often than not left to the discretion of the individual agency.

3. In a similar vein, manuals which are used in inspection and specifications and standards were thought to be powerful tools which go hand in hand with advanced NDE procedures and equipment. In the past, there has been evidence of gross misunderstanding and misuse of standards and specifications, and of incorrect and unclear guidance in inspection manuals.

4. Focus on the important role that fracture mechanics criteria have played in necessary requirements in NDE.

5. The increased attention which has been given in the past decade to new emerging NDE concepts, techniques, and equipment, which provide capabilities for detection of ever more sensitive levels of microcracks, inhomogeneities, and impurities which have deleterious, immediate or long-term effects on in-service systems.

6. Dealing with barriers to the implementation of new NDE methods and equipment into system use, whether at field, depot, or production levels.

The foregoing are, by no means all of the important issues which relate to NDE as it relates to R&M issues. However, because of the constraints of time, these were judged to be the most important topics to be addressed.

FOCAL POINTS OF THE NDE COMMITTEE
(JANUARY, 1983)

i. Issues to be addressed by NDE Working Group

1. How and where are NDE methods in use in the military systems selected for the study?

2. How effective are these for determining flaws, discontinuities, etc. (for their originally intended purpose)?

3. Are these methods amendable to the effective maintenance of these systems in terms of:

   a. Predicting problems before they are critical.

   b. Locating and monitoring defects, flaws, etc., which are at a tolerable level.

   c. In-service embedded sensors.

4. Are the presently specified NDE requirements adequate to address foreseeable problems in the specified military systems?

   a. If not, are there other areas (components, etc.) which should be evaluated?

   b. Are there other methods which are better than the ones being used?

5. How were the NDE methods and items to be inspected identified initially and at what stage in RDTE&A? What were the criteria?

   a. Sensitivity, reproducibility, etc.

   b. Cost

   c. Speed

   d. Complexity

   e. Field portability (including use at depots)

   f. Intended use by unskilled personnel.

6. Are there optimum places in the RDTE&A cycle for introduction of NDE (where necessary)?

9.107

7. What is the status of (adequacy of):

   a. Standards and specifications for NDE as reflected in the candidate systems.

   b. Training of NDE technicians (or of others responsible for maintenance).

   c. Awareness of NDE necessity by designers.

8. Recommendations for improvements, including projected cost/benefits in peacetime and wartime scenarios.

9. Where are emerging techniques likely to see application?

10. Focus on major causes of downtime and lead back to whether NDE can be of use in preventing.

11. Pinpoint the gaps where we do not have a handle on the right NDE methods - where we have to evolve an approach.

ii. Systems to be Addressed

1. Approach:

   Select one system on which a body of maintenance data exist, employ these for analysis, and make use of them to try to predict and prevent problem areas in systems now coming on-stream.

2. Tanks

3. Ships

4. Rotary-Wing Aircraft

5. Fixed-Wing Aircraft

6. Armaments

iii. Product Expected

1. Maps of where, and how effectively, NDE and related methods are being applied in the candidate military systems.

2. Maps of gaps and opportunities which can be exploited, including estimated ROI and cost savings to be realized.

3. Barriers which need to be addressed in:

   a. Specifications and standards.

   b. Training of maintenance personnel.

   c. Awareness of designers and others in the RDTE&A chain of the need for NDE at appropriate parts of the cycle.

   d. Management issues.

TASK GROUP
ON
NDE
IN
TANKS
IV. A. 1

IV. A. 1. INTRODUCTION: TANKS

The approach taken by the task group on tanks was to focus on the major causes of downtime and to identify those areas where NDE approaches are needed to solve the problem. Sources of information included the M1 and M60 PM offices, the M1 manufacturer and the tank rebuild depot. This section lists our findings of current reliability and maintainability problems affecting both M1 and M60 tanks. Although the majority of the current "Top-20 Replacement" problems are not NDE related, key problems were identified where NDE is needed in manufacturing, in field maintenance and at the overhaul and rebuild depot.

The most critical problem considered by this task group which is common to both M1 and M60 tanks is the nondestructive evaluation of track rubber. The functioning of the whole track depends upon the quality and bonding of road wheel rubber, track shoe rubber, and track pad rubber. There currently exists no practical NDE method for assessing either of these important parameters. Present laboratory characterization techniques, generally considered destructive for chemical composition and homogeneous blending evaluations, need to be evolved for practical nondestructive applications in a production environment.

Other key areas identified which require development and implementation of state-of-the-art NDE techniques include the measurement of residual stress in suspension components and the inspection of heavy section weldments. Of equal importance is the use of NDI on critical components which are candidates for reuse at the rebuild depot. In the M60 program, little if any NDI is required for reclaimed components. The introduction of even conventional methods is needed to provide a significant increase in detection probability of service-induced damage over the current visual inspection requirements. In the following section, recommendations to enhance the tank reliability and maintainability posture are presented.

6.95-Hatch-1

BACKGROUND

This report is based on the results of a trip made on 17 February 1983 by H. Light of DARCOM QA, C. Kedzior of TACOM QA, and G. A. Darcy, of AMMRC, MITT Div. to the Quality Assurance Directorate of the PM's for M1 and M60 and to the Quality Assurance Office of the M1 Contractor, General Dynamics Corporation's Land System Division. All of the forementioned offices are located in the Warren, Michigan area. Detailed references on the background for the visit personnel visited, and the relationship to the Reliability and Maintainability Study by the Institute for Defense Analysis are given in the references 1, 2, and 3.

A. Information from M60 Tank (PM Office)

1. Torsion bars There are two supplies of torsion bars: Bars from both suppliers meet the specifications but those from one of the suppliers last much longer. On rebuild there is no test for used bars and there is no way to judge the condition of a used bar except for a visual

check. On rebuild, new bars are placed in the #1, 2 and 6 positions, while used bars (even from #1, 2 and 6 positions) can be used in the other locations. Positions 1, 2 and 6 are the locations subjected to the worst abuse. AMMRC has been active in reviewing the torsion bar drawings and has come up with a series of tests (and validations) which could be used for screening. It appears too expensive but is under review by TACOM/M60 personnel. It would require log records, and odometer readings and also stamping the bar at every 2000 mile check with discard taking place after 12 - 15,000 miles. Fort Stuart is checking M60 A1 to A3 conversions, and after engine and sprocket problems, torsion bars are the third most frequent problem. Eight have failed in one series of tests. However, on new M60 productions, torsion bar failures do not make the Top 20 Failure Report.

Based on the observation that there has been only one failure on M1 torsion bars (and that was at 12,000 miles), an Engineering Change Proposal (ECP) has been prepared to redesign the M60 torsion bar to M1 standards, which includes alloy change and spline fit tightening. A two-thirds improvement is expected since the spline socket is not to be modified but the fit will be improved.

2. Rubber Track Pads For new tanks in Germany the fifth ranked problem is track pad failure. Delamination is the failure mode in two-thirds of the pad failures. Mention was made of the AMMRC ultrasonic phase-reversal NDT method which does not work with

partial or poor bonds. Mention was also made of trials of an Impactiscope produced by a Pennsylvania company. It was noted further that there is no adequate control method for track pad rubber adhesion.

3. Rubber Hatch Seals Failure of rubber hatch seals has been a continuing problem which allows water, both rain and wash water to enter and cause various mechanical and electrical problems. It would appear to be a quality control problem and has indicated a need for a failure analysis study.

4. Reused Gear Noise The gears are crowned and the contact pattern is measured. However, some gears on reassembly are excessively noisy beyond some arbitrary or subjective level. The true threat of noisy gears is not known. Reassembly with other mates is accomplished until a "proper" sound level is reached.

5. Matched Gear Failure Some gears are purchased and used as matched pairs. When one fails, both are discarded. Since cost is a major factor in these sets, a test to allow use of the survivor in further rebuild might be warranted. (The small pinion gear in the turret drive pair is one that frequently fails.)

6. Track Pin Little is known of pin behavior and relative life of the pin. On rebuild of the M60 Track, 100% of the pins are discarded. There is currently only one supplier. Pins are

5.16/4

thru-hardened, then case hardened and shot peened. there was mention of an AMMRC/TACOM pin test (NDT) to be used on the pin in-place on the track. If the pin is found to be "overstressed", it is felt that it will fail soon and thus 6 - 10 pins would fail and 80 or so would be OK but they (80) would be discarded for lack of an adequate test method. The failure mechanism seems to be a subsurface crack under the case hardening. It was suggested that tests both on the vehicle and at a depot would be desired.

7. Spring in Recoil Mechanism There is some indication that recoil spring failures may be requiring attention on the gun system. There is no test presently for the spring which has been failing near its base. Further information would have to be obtained from RIA or WVT (Rock Island Arsenal or Watervliet Arsenal).

8. Tracking of Failures It was suggested that the best way to get information on the economic aspects of failure and replacement and related costs would be to start with a list of replacement parts and their costs from Anniston Army Depot. In an attempt to get feedback to a designer/manufacturer, a warranty program was set up with Bendix Corp., supplier of starting motors. The intent was that motors returned under warranty would serve as a controlled population of failed parts which cound be analyzed by the original manufacturer and the ensuing information used for product or quality control revision. However, the handling and bookkeeping procedures proved so difficult that the warranty system was dropped. It was

most difficult to separate various populations under- and not-under warranty. Now the popular practice is to obtain contracted engineering services to go out and investigate failures on-site and, where required, to bring back components for in depth metallurgical, mechanical, chemical or nondestructive analysis. There is a large amount of failure information in existence but it is scattered and sometimes not indepth. It is not available at a program level where it can be extracted. It can be gathered only with substantial effort.

9. Fuel Injection Lines A problem of poor layout is ascribed as the reason for mechanical failure of reused fuel injection lines. There was very little discussion and it was evidently not amenable to solution by NDT.

10. Casting/Welding The question of casting and welding quality inspection was brought up with the M60 Program Management Office because of the well recognized problems of welding repair for thick section welding and the inherent cost and time requirements for radiography which needs radiation shielding and removal of hulls from the production line for inspection. The M60 hull is cast in three parts, the supplier, and subsequently welded together. Reportedly there are no problems along these lines. Production is scheduled to end in September 1984 unless there are additional requirements especially for foreign orders. The manufacturing savings or quality improvements which could be made if a replacement for radiation techniques were available through use of ultrasonic techniques or acoustic emission or some other approach, is not known. It would require an in depth study of the subject to produce an analysis.

B. Information from M1 Tank (PM Office)

1. Sensing and Monitoring Systems The reliability of built-in sensors was reported as far under what would be desirable. Sensing transducers and the associated systems and indicators, etc. have failure rates which make their utility less than it should be. The condition monitoring system and transducer should have a reliability substantially above that of the system function under observation. Continuance of the situation leads to unnecessary aborts or to a situation where the operator ignores the signal. Both are an unacceptable condition. Magnetic wear particle plugs are used on the lubricating oil system and a Spectrometric Oil Analysis Program (SOAP) is also incorporated in the maintenance procedures. Oil sampling measurements are made every 25 hours of engine operation. High readings call for removal of the engine and test continuation on a test stand for 24 hours operation. If the readings drop the engine is returned to service. If high the turbine is disassembled. The overall monitoring system monitors such functions as fuel pressure drop, oil level, oil pressure, fuel pump operations, gas temperatures, fire extinguisher charged/discharged, etc. One successful monitoring system is cable connent/disconnect monitor which uses one lead in each cable to detect loose or missing cable connections. Many of the systems on the M1 are electrically/electronically operated compared to mechanical/hydraulic systems on the M60. For example, the throttle, fuel control, and transmission are electrically/eletronically controlled.

2. Following are items taken from the so-called Top 20 Replacement list which reflects the experience with 170 M1 Tanks with an accumulated mileage of about 127,000 miles.

a. Thermal Imaging System This unit is repaired as a unit by the manufacturer

b. Starter This component is limited to three 45 second start attempts before an abort situation is supposed to prevail. Operators exceeding that limit have caused 129 melt-downs.

c. Fire Extinguisher System System leaks have caused low pressure.

d. Fuel Pumps Submerged fuel pumps had leaks at cable input seals. Sealant system was corrected.

e. Fuel Nozzles Coking at the nozzles on engine shut-off resulted from dribbling fuel. Nozzle design change has been instituted.

f. Engine Electronic Control Unit Test Set Unreliability in the Test Set has been causing good control Units to be removed unnecessarily for repairs. Points out need for reliable sensors/test sets.

g. Hull Electrical Network Box Problems with both circuit breakers and circuit boards.

h. Driver's Instrument Panel Damage to the panel by personnel entering/exiting the tank requires removal of entire panel box for replacement of damaged lamps/LED's.

i. Turret Electrical Network Box (similar to (g) above)

j. Turret Drive Electromechanical reliability

k. Transmission Oil Overheat Contributed to by plugging of narrow coolant passages in oil heat exchanger.

l. Laser Range Finder System limitations

m. Turret Traverse Stability Electromechanical problems

n. Hydraulic Systems Various unreliability problems. This system also utilized magnetic particle chip detectors.

o. Ballistic Computer Some relacements required.

C. Information from M1 Tank (General Dynamics, Land Systems Division Quality Assurance Office)

1. Discussions with personnel at the producing contractor included certain observations and recommendations pertinent to reliability

and the potential application of NDE. When looking at the three areas of manufacturer, user, and rebuild/overhaul, the largest opportunity for payoff may be in the last two: user, and rebuild/overhaul. The use of NDT in the "user" category would be to utilize NDT in a condition monitoring mode in order to rebuild on a necessity basis rather than on an arbitrary time or mileage basis. Another area worthy of examination for potential NDT use would be the semi-annual inspection which is done in a 60 hour time span. Perhaps if more "efficient" NDT were available, a more comprehensive inspection could be done within the inspection period.

During construction, all of the NDE that is deemed adequate and necessary as specified in the Technical Data Package is done. The welded armor plate is x-rayed at all critical welds every thirty tank and some of the non-critical welds are also inspected on a rotating basis. The x-ray process is awkward in terms of removing a tank from production, etc. but it is accomodated. There is evidently not a need for more extensive inspection, but no hard data is available to accurately support this. The time, cost, and inconvenience aspects of radiography are well recognized. Other techniques such as ultrasound or acoustic emission may assist in thick weld inspection.

The advantage of NDE could well be used in the 6000 mile overhaul where remaining life of used components could be measured to save on parts now discarded. The procedures for any approach along these

lines would be to include them in the Depot Maintenance Work Requirement (DMWR), the document which describes the rebuild procedures for each system.

The contractor feels that in the case of the M1 there is excellent feedback from the field on failures, and mechanisms have been set up to investigate, in depth, the root causes of failure by use of investigating teams and the return of failed parts. The only area where there is an information flow impediment is in the area of Depot repair and rebuild. This data does not flow back to the contractor.

The corporate memory already has had some input. It has been learned (and design changed made) not to use PVC insulated wire because of the corrosion problem involving zinc with the generation of hydrochloric acid; another area is that of using chemical "washers" on fasteners which avoid the loosening problems associated with star washers; a third area which does involve NDT is that they have been able to ease off on a sampling basis on the use of penetrant testing of welded brackets and fittings since the quality is now very consistent and acceptable.

In an effort to forestall any inadequate consideration for quality assurance, a new management information system is being instituted which will reference by computer all quality assurance requirements, provision, and procedures for each drawing. During any engineering

change, all quality provisions will be checked to determine the effect of drawing changes on any quality requirements and procedures.

2. Sensors Two limitations were noted for sensing systems (condition monitoring). The first of these is the inherent unreliability of the sensors and their tendency to fail. They require a reliability superior to the part or function they are monitoring. The second major limitation is that they tend to measure or detect failure as it happens. Anticipation of failure or the detection of incipient conditions would be a better approach.

3. Torsion Bars Only one M1 torsion bar has failed so far and that was in a tank which had 12,000 miles accumulated. The technology for design and manufacture was an improvement over the M60. An alloy change and tighter spline design is credited with the improvement.

4. Track The track for the M1 is not rebuilt because it is not cost effective due to its design and construction. The cost is $17,000 per set which amounts to $20 per mile of use on a basis of about 850 miles per set. The DARCOM goal is 2000 miles per set. The metal parts usually do not fail; the failure is typically in the tread pad. The roadwheel is also an entirely new design compared to the M60 roadwheel.

5. Test Sets There has been a continuing problem of test sets (usually plug-in) which produce two many false negatives which lead to unnecessary expensive removal and attempted repair, as previously noted.

6. Plastic Fuel Tank Linings The sheet plastic liners are tested with a high voltage probe which searches for pinholes and cracks. It could be considered as a nondestructive test. It is effective.

7. Turbine Blades No problems have been experienced with turbine blades.

8. Engine Overhaul There has been only limited experience in engine overhaul; so far less than 24 engines were overhauled at the Mainz Army Depot.

9. Engine Durability Any engine which must be removed for repair/replacement is called a durability failure. The durability levels reached so far are less than the goal. A task force was established and met recently to review manufacture of the engine and to determine whether the design lends itself to producibility. The conclusion was that it is producible.

10. Problem/Failure Follow-up The appearance of a problem on the Top 20 List brings attention and resolution through various methods of test, redesign, repair, new manufacturing procedures, change of materials, etc. A fix is established for each problem when it is

suitably resolved and then the fix is accomplished in the population. Engine fixes are tried first on a special population of 8 tanks.

D. Application of NDT in Tank Manufacture, User Maintenance, and Rebuild/Repair

The comments of the TACOM and contractor personnel obtained during the visits were reviewed and analyzed for indications of use of NDT and potentials for the use of NDT in improving reliability and maintainability (R&M) levels. This sould not be considered as an in-depth analysis. Suggestions are made below on the desireability of conducting further studies to enhance R&M postures.

1. Manufacturing Control and Inspection

a. Track Pads There is an obvious need for process control and inspection for track pads. Some pads do not fail, and those that do fail seem to relate to the manufacturer. All manufacturers produce the pads to a specification which is met. It would appear that tighter starting materials control, and NDT compounding and process control supplemented by final NDT could assure higher quality levels and resultant longer life toward the Army goal of the 2000 mile pad.

2. Remaining Life Measurement at Rebuild Two areas of potential opportunity are in the reuse at rebuild, of used torsion bars and track pins. All track pins are discarded in M60 Tank track rebuild. There is no current methodology available to separate those which may have remaining life including almost new pins which may have seen only a few miles use. Approaches should be investigated along residual stress and fatigue crack measurement lines, etc. to determine if there is a viable method to segregate reuseable pins. The M60 tank is scheduled to remain in the US inventory until after the year 2000. The foreign inventory could last much longer.

M60 torsion bars represent another possible opportunity for savings. Torsion bar failures in rebuilt M60 tanks have been a recurring problem. An engineering change proposal has been prepared to convert to the more successful M1 bar design. The potential for reliability improvement of current bars by a more rigorous inspection utilizing NDT rather than the current visual test should be investigated for the remaining inventory of M60 bars.

3. Opportunity in Sensor and Test Set Reliability The continuing problem of sensor and test set reliability was widely noted and reflected in prior studies (ref. 4). There is an opportunity, on a long term basis, for sensing by imbedded NDT technique. A new generation of wear monitors, fatigue monitors, crack detectors, etc. could be developed to push out time-to-rebuild to longer intervals with some confidence. The need for sensor development was also indicated as one of the main themes in the recent DARCOM Testing Needs Survey. The reliability levels need to be three to ten times better than the class of components under test.

4. Radiography The cost, time, convenience and technical limitations of conventional radiography were universally noted during discussions. The potential advantages of ultrasonic and acoustic emission techniques are understood but these new approaches have not reached industrial application acceptance. The potential advantages of other than x-ray techniques for weld or hull inspection are apparent in terms of no radiation hazard, no removal of the test item to a shielded area, real time processing of data, and process control feedback. A technical and economic study would have to be completed.

5. Failure and Rebuild Information The current quality, availability, and flow of information on failure, wear, and replacement of parts is not particularly amenable to interpretation of root cause analysis nor for interpreting the potential application of NDT techniques to the monitoring of quality or flaw detection. There is failure/replacement information available but it is difficult to extract and interpret. As noted during one conversation, it is not extractable at a "program" level to be of use. In many instances, the current flow does not contribute to the corporate memory. For example, the rebuild and replacement information on parts and components from the Army Deport does not flow back to the General Dynamics Land System Division which designed and builds the M1 tank.

6. Situation Studies for Application of NDT There are undoubtedly other areas where NDT, which offers the opportunity for 100% inspection, could be used. Reduction of scrap during manufacture is one area. The use of NDT as a material forming and process control monitor offers advantage for control feedback and the removal of defective or spoiled material as early as possible during the manufacturing process. Studies would have to be made of opportunity areas in tank production where NDT could offer economic or technical return-on-investment.

REFERENCES

1. AMMRC Trip Report, T.O. No. 1-96, to IDA, 26 January 1983.
2. AMMRC Trip Report, T.O. No. 2-62, to TACOM (M1 and M60) and General Dynamics, 17 February 1983.
3. AMMRC Trip Report, T.O. No. 2-125, to IDA, 24 February 1983.
4. Office of Secretary of Defense/Defense Science Board 1983 Summer Study, "Operational Readiness with High Performance Systems", issued by the Office of the Secretary of Defense for Reseach and Engineering, April 1982.

5.16/18

The attached charts illustrate the matrix analysis concept used for identifying key NDE problems associated with M60 suspension and track components.

59/11-3

M-60 SUSPENSION COMPONENTS

CRITICAL COMPONENT	PROBLEM AREA	DESIGN ANAL MAT'L REVIEW REQ'D	MAT'L/ FLAW EVAL REQ'D A B C	NDE TECH AVAIL/ ADAPT A B C	NDE SPECIFIED/ USED A B C	R&D INITIATED OR PLANNED A B C	PARTS HISTORY MGMT
TORSION BAR	FATIGUE FAILURE RESIDUAL STRESS	YES	Y Y Y Y N ?	Y N Y Y - Y	Y N N N - N	- N N Y - ?	NO
VOLUTE SPRING	WELD FAILURE SPRING FRACTURE	YES	Y ? Y Y ? Y	Y ? Y Y ? Y	Y N N N N N	?	NO
ROAD WHEELS	FRACTURE RUBBER QUALITY RUBBER BOND	YES	Y Y Y Y - - Y Y Y	Y ? Y N - - N N N	? N N N - - N N N	? ___ Y - - Y N N	NO
ROADARMS	BEARING CRACKS HOUSING CRACKS	? RECENTLY MODIFIED	Y ? Y Y Y Y	Y ? Y Y ? Y	? N N ? N N	?	NO

A - IN PROCESS/FINAL INSPECTION
B - MAINTENANCE AND DAMAGE ASSESSMENT (FIELD)
C - OVERHAUL AND REBUILD

Y = YES
N = NO

M-60 TRACK COMPONENTS

CRITICAL COMPONENT	PROBLEM AREA	DESIGN ANAL MAT'L REVIEW REQ'D	MAT'L/ FLAW EVAL REQ'D A B C	NDE TECH AVAIL/ ADAPT A B C	NDE SPECIFIED/ USED A B C	R&D INITIATED OR PLANNED A B C	PARTS HISTORY MGMT
PINS	FATIGUE FAILURE RESIDUAL STRESS	YES	Y Y Y Y N Y	Y Y Y Y - Y	? N N N - N	? Y ? Y - ?	NO
SHOE	FATIGUE FAILURE	?	Y ? Y	Y N Y	? N N	? N Y	NO
PAD ASSEMBLY	RUBBER PAD QUALITY RUBBER BONDING BACKING PLATE CRACKS	YES	Y - - Y Y Y Y ? Y	N - - N N N Y ? Y	N - - N N N ? N N	Y - - Y N N ?____	NO
GUIDES AND END CONNECTORS	NOT REPORTED AS CHRONIC						

A - IN PROCESS/FINAL INSPECTION
B - MAINTENANCE AND DAMAGE ASSESSMENT (FIELD)
C - OVERHAUL AND REBUILD

Y = YES
N = NO

M-60 TRACK & SUSPENSION COMPONENTS

KEY NDE PROBLEMS	STATUS OR ACTION REQUIRED
• RUBBER QUALITY/MATERIAL PROPERTIES (PAD/SHOE/ ROADWHEEL)	"DARCOM ELASTOMER RESEARCH DEVELOPMENT PROGRAM" ADDRESSES PROBLEM AND INCLUDES NDE CHARACTERIZ-ATION OF EXISTING AND IMPROVED MATERIALS.
• RUBBER-TO-METAL BONDING (PAD/SHOE/ROADWHEEL)	PAST/CURRENT EFFORTS NOT DEFINITIVE - PROPOSAL FOR NDE METHOD NEEDED.
• RESIDUAL STRESS DETERMIN-ATION (TORSION BAR/TRACK PIN)	CURRENTLY FUNDED UNDER MTT PROGRAM.

RELATED PROBLEMS	
• INSPECTION OF RECLAIMED COMPONENTS USED FOR REBUILD	REVIEW DMWR AND ESTABLISH NDI REQUIREMENTS FOR MISSION/MAINTENANCE CRITICAL COMPONENTS - PROPOSAL NEEDED (NOT R&D).
• FATIGUE FAILURES/INFANT MORTALITY	DESIGN ANALYSIS, MATERIAL REVIEW, AND TDP REVIEW REQUIRED.

R&M STUDY

NONDESTRUCTIVE EVALUATION

M60 PRODUCTION LINE NDI CAPABILITIES

A review of the M60 production line at the Detroit Arsenal Tank Plant (DATP) in Warren, MI, has indicated the following NDI capability utilized by the contractor in the production of the M60 tank:

(a) Radiographic Inspection
(b) Magnetic Particle (Wet and Dry)
(c) Dye Penetrant
(d) Ultrasonic Inspection (for thickness only)
(e) Plating Thickness

No eddy current capability exists at the DATP.

The radiographic capability consists of a 250 KV unit which is used primarily for welder certification, incoming quality checks, and in-house production quality. The radiographic equipment lacks the power required to perform hull and/or turret inspections.

The magnetic particle inspection (wet or dry) is normally used for the inspection of machined surfaces on such tank components as hatch covers, sprocket hubs, sprocket gears, etc.

Dye penetrant is used for the inspection of welds and surface irregularities found on the hull and turret assembly lines. The hulls and turrets themselves are inspected at the source of production, as well as the structural welds which

form the hull from individual hull section castings. There is no hull/turret inspection performed at DATP.

Ultrasonic inspection for wall thickness measurements is the only UT capability at DATP. Such measurements are required when hull/turret machinings are performed.

Plating thickness, based on magnetic principles, is used for measurement of various plating thicknesses such as phosphate, alodine, paint, nickel, chrome, etc.

58/6-2

AD-A139 484 NONDESTRUCTIVE EVALUATION TECHNOLOGY WORKING GROUP REPORT (IDA/OSD R&M (I..(U) INSTITUTE FOR DEFENSE ANALYSES ALEXANDRIA VA SCIENCE AND TECH.. G MAYER 2/5

UNCLASSIFIED AUG 83 IDA-D-37 IDA/HQ-83-25921 F/G 14/2 NL

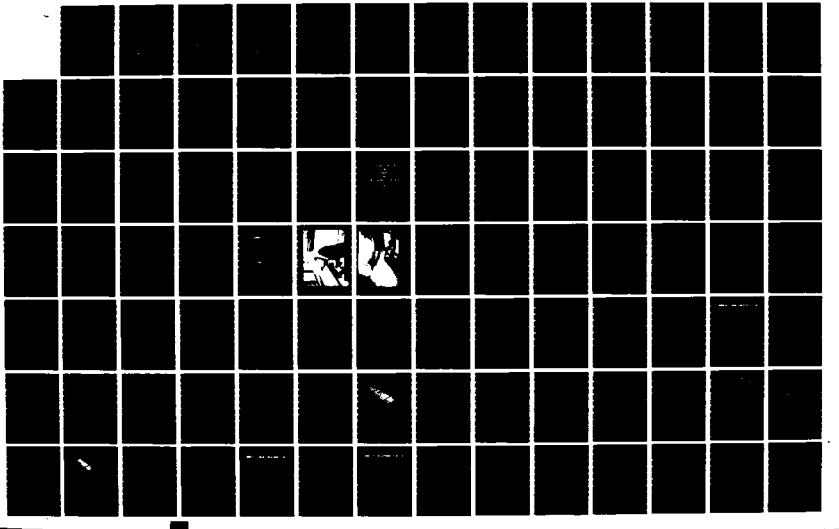

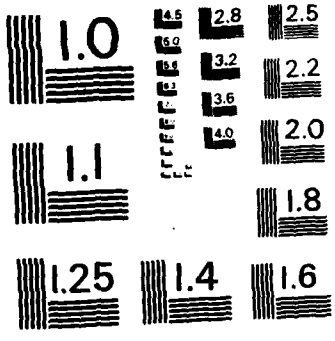

MICROCOPY RESOLUTION TEST CHART
NATIONAL BUREAU OF STANDARDS - 1963 - A

R&M STUDY

M60 PRODUCTION

- NDI CAPABILITY
  - RADIOGRAPHIC
  - MAGNETIC PARTICLE (WET AND DRY)
  - DYE PENETRANT
  - ULTRASONIC (THICKNESS ONLY)
  - PLATING THICKNESS
    - PHOSPHATE, ALODYNE, PAINT, NICKEL, CHROME, ETC
- NO EDDY CURRENT

R&M STUDY

M60 PRODUCTION

- RADIOGRAPHIC INSPECTION
  - 250 KV UNIT
    - ▲ WELDER CERTIFICATION
    - ▲ INCOMING QUALITY CHECKS
    - ▲ IN-HOUSE PRODUCTION QUALITY
  - NO HULL/TURRET CAPABILITY

R&M STUDY

M60 PRODUCTION

- MAGNETIC PARTICLE INSPECTION
  - WET AND DRY
  - INSPECTION OF MACHINED SURFACES OF SMALL COMPONENTS
    - HATCH COVERS
    - SPROCKET HUBS
    - SPROCKET GEARS

R&M STUDY

M60 PRODUCTION

- HULL/TURRET INSPECTION
  - SOURCE INSPECTION FOR
    - ▲ TURRETS AND HULL SECTIONS
    - ▲ STRUCTURAL HULL WELDS
  - NO RADIOGRAPHIC INSPECTION AT DATP
  - DYE PENETRANT ON VISUALLY DETECTED CRACKS

NDI OF TRACK RUBBER

INTRODUCTION

The current annual repair and replacement cost of all Army track is $130M. In order to significantly decrease this cost and simultaneously bring about a major increase in the R&M of track, nondestructive inspection techniques need be developed and perfected with which to ensure the quality of rubber track components in two chronic problem areas; disbond and chunking.

DISBOND - BACKGROUND

Rubber disbond occurs when the rubber to metal adhesive bond strength is too low to withstand the stresses encountered during vehicle operation. Currently, the only method of bond strength inspection is by destructive adhesion (peel) test of sample production lots which causes a minimum destruction of 2% of rebuild production. A nondestructive bond strength inspection procedure would permit 100% inspection in addition to eliminating the loss of 2% of production components which are now destructively tested.

DISBOND - PRIOR INVESTIGATION

Several attempts have been made to relate adhesive bond strength to the signal phase reversal of an ultrasonic pulse echo

reflection form an unbonded rubber-metal interface. Two phases of the effort have been undertaken. In the first, in which bond strength was verified by road test, inspection correlation has not been indicated; in the second, in which laboratory adhesive tests are used to verify ultrasonic inspection, the final data analysis has not yet been completed. Furthermore, correlation between adhesive bond strength and ultrasonic inspection appears uncertain at this time.

DISBOND - REQUIRED INSPECTION TECHNOLOGY

A nondestructive inspection technology is required which would provide quantitative indications of rubber to metal bond strength.

DISBOND - IMPLEMENTATION

The NDI for adhesion strength would be implemented at the point of production by Maintenance Work Order (MNO) at depots and by contract at commercial production facility.

CHUNKING - BACKGROUND

Chunking is the premature failure of rubber components in which pieces of rubber tear from the rubber component under the stress of normal loading. R&D work performed in an attempt to identify failure mechanisms in synthetic rubber track components has

identified a probable cause of chunking. Examination of fracture surfaces disclosed a high concentration of zinc oxide which was not found on other surfaces. This suggests poor blending of synthetic rubber constituents, causing boundry layers along which failure (chunking) occurs during vehicle operation.

CHUNKING - REQUIRED INSPECTION TECHNOLOGY

A nondestructive inspection technique is required for rapid examination of surface and shallow depth condition of blended rubber which can indicate boundry layers between rubber ingredients. Methods which indicate promise are: nuclear magnetic resonance and scanning photo acoustic microscopy (SPAM). Other characterization methods which are not nondestructive, but which offer promise, are scanning electron microscopy with energy dispersive analysis (EDAX), photoelectron spectroscopy, and ESCA.

CHUNKING - POINT OF APPLICATION

The appropriate point of application for NDI of rubber blending is at the source of rubber production, permitting the rejection of defective rubber at its source.

CHUNKING - IMPLEMENTATION

Requirement for NDI of blended rubber would be by MIL SPEC for rubber.

DISBOUND AND CHUNKING - BENEFITS

* Decreased cost of replacement
* Decrease in spare parts inventory
* Increased operational readiness

DISBOND - RESOURCES REQUIRED

Since a practical nondestructive inspection technique capable of indicating bond strength prior to actual debonding has not yet been identified, the task is considered to be a medium cost R&D effort requiring several years of intensive investigation.

CHUNKING - RESOURCES REQUIRED

An estimated $2-5M and 3 years would be required to select and adapt one of the viable inspection techniques identified in R&D work.

AUTOMATED X-RAY DIFFRACTION SYSTEM

DESCRIPTION

During the fabrication of M60 and M1 torsion bars and track pins, shot peening is required to reduce surface tensile stresses resulting from grinding and machining operations. The intent is to induce beneficial compressure residual surface stresses for the purpose of improving resistance to fatigue and stress corrosion cracking. Because of significant variability in the induced processing residual stresses, the subsequent surface residual stresses after shot peening are accordingly variable. X-ray diffraction is a well-known technique for evaluating surface residual stresses in ferromagnetic materials, but until recently has been considered too time consuming for production application. Fast x-ray diffraction systems have been developed which can be adapted to production inspection of torsion bars and track pins.

RECOMMENDATION

Develop and acquire automated x-ray diffraction instrumentation for implementation as a quality control/assurance procedure for shot peening of tank torsion bars and track pins.

R&M BENEFITS

Quantifiable: In the case of track pins only, approximately one million T-142 track pins (for M60 family) are purchased

annually. Through adequate quality control of the shot peening operation could increase fatigue life of pins as much as 10% resulting in a 10% decrease in procurement of components. The cost of each T-142 track pin exceeds ten dollars, which could result in savings in excess of one million dollars annually.

Non-quantifiable: Decrease cost of repair and replacement
Reduce downtime
Increase operational readiness

RESOURCES REQUIRED

Instrumentation development, acquisition, and implementation including QA procedures: $1M, 2 years.

INTRODUCTION OF CONVENTIONAL NDE TO TANK REBUILD PROCEDURES

PROBLEM

As the result of numerous value engineering improvement and rewrites of the M60 Depot Maintenance Work Requirements (DMWRs) over the years with the idea of reducing unnecessary replacement of individual components, the number of components now reused which have been exposed to cyclic service stresses has significantly increased. While the updated DMWRs focused on cost effectiveness considerations with the aim of lowering depot overhaul cost, the impact on the reliability and durability of the end item is uncertain. There is no way of knowing how much life remains in components that are resued. Although the depot adheres religiously to the DMWR procedures, little, if any, nondestructive inspection is required for reclaimed components. For example, the DMWR required visual inspection of torsion bars, roadarm housings, track link assemblies, and track pad assemblies for serviceability.

RECOMMENDATION

Conduct a rigorous DMWR review for the purpose of introducing nondestructive inspection requirements for those mission and maintenance critical components which are candidates for reuse. The application of even conventional magnetic particle, penetrant,

ultrasonic and eddy current techniques would provide a significant increase in detection probability of service induced damage over the current visual inspection requirements. For example, a magnetic particle inspection has the capability of detecting service induced fatigue cracks in the torsion bar splines which has been identified as the initiation site for field failures in numerous failure analysis reports.

R&M BENEFITS

The savings on maintenance costs and increased reliability will be enormous but cannot be quantifiably estimated without parts tracking history. The application of NDE technology to depot rebuild programs will significantly reduce the reuse of defective components.

Results will include:

Increased operational readiness

Increased mission effectiveness

Reduced downtime

Reduced cost of repair and replacement

5.27/2

RESOURCES REQUIRED

To adequately conduct this program will require an interdisciplinary team involving designers, materials engineers, NDE engineers, and QA specialists. Cost of review is estimated as 4 man-years to be completed in 18 months. Implementation costs will include equipment acquisition, preparation of procedures, and personnel training/certification. Implementation period is estimated at 2 years.

WELD QUALITY MONITOR

DESCRIPTION

The Weld Quality Monitor (WQM) continuously measures, with conventional transducers, the four primary signals from the welding system (current, voltage, travel speed, and wire feed speed) and computes weld quality parameters such as heat input and weld bead geometry. An integral part of the WQM, the optoelectronic module, enables detection of changes in shield gas flow, filler metals and fluxes, and the presence of unacceptable concentrations of hydrogen surrounding the arc. The spectral response from the weld arc and the measurements of process parameters are automatically compared to preset operating limits and processed in real time.

RECOMMENDATION

A non-contact Weld Quality Monitor will be developed and installed to detect and identify deviations from established welding parameters and conditions which lead to welding defects in the M1 armor plate.

R&M BENEFITS

Quantifiable: $1,000 saved per M1 tank through reduced inspection and weld repair costs

Non-Quantifiable: More uniform production rates through improved cycle times and more efficient utilization of equipment, the ability to pinpoint problem areas, and reduced personnel factors through complete automation.

58/7-1

RESOURCES REQUIRED

Instrumentation development and acquisition:	$1M, 2 years
Implementation:	$1M, 1 year

58/7-2

ACOUSTIC EMISSION WELD MONITOR SYSTEM

DESCRIPTION

The Acoustic Emission Weld Monitor System (AEWM) is a real-time, on line system which continuously monitors the application of the weld and detects, locates, and identifies several types of weld faults as they occur.

The principle of operation is the detection of acoustic energy burst released within the metal at the time the failure occurs. The energy bursts are sensed by sensitive acoustic transducers (essentially microphones), which are magnetically held to the surface of the ferromagnetic members being welded. Two such transducers are affixed, one at each end of the weld.

Indication of a potential weld fault occurs when the monitored AE signal bursts deviate from reference signals stored in the system memory. The reference signals are based on AE signal recordings being obtained from fault free welds.

Location of the potential weld fault is accomplished via the time difference of arrival of the acoustic energy burst at each of the two transducers.

Identification of the type of potential weld fault (crack, porosity, lack of fusion, and incomplete penetration) is accomplished by self-contained microprocessor enhanced computer analysis of the detected acoustic energy bursts. Differences in acoustic burst parameters such as energy, frequency repetition rate, etc., are utilized in the classification of the weld fault, as well as differentiation between weld faults and background acoustic noises encountered in the production line environment

CONTRIBUTION TO R&M

The applicaiton of the AEWM to the production of weld assembled vehicles will result in significantly improved weld quality, thereby improving since all significant welds can be monitored 100%, as opposed to the current practice of radiographic sampling inspection. Furthermore, the opportunity will exist to execute immediate repairs as opposed to the current need to excise faults from welds only after the entire assembly is welded. Currently, in many cases, faults are found in welds several inches t ink or in fairly inaccessible areas. In some instances, it is felt the repair may give rise to more problems than it cures.

IMPLEMENTATION

Since the AEWM is a real-time, on line process monitor, the only point of implementation is the production line where the

welding fabrication is executed. The AEWM has no "after-the-fact" capability - it must be actively applied to the assembly during welding.

The most beneficial utilization of the AEWM is its application to massive welds (where radiography and repairs would be time consuming) or to welds which, by virtue of their location or configuration, are difficult or impossible to inspect by other conventional NDI procedures.

An additional implementation point would be vehicle modification and/or battle damage repair performed at depots where radiographic facilities are insufficient in capability or capacity to satisfy the demand.

PRIOR UTILIZATION

The AEWM has been developed for monitoring armor welds from its earlier application of welding thin-walled railroad tank cars and developmental application to the welding of nuclear grade metals.

Laboratory developmental work with simulated weld faults in 2 inch thick armor yielded an average 78% flaw detection rate among such defects as cracks, porosity, incomplete penetration, and lack of fusion. A trial application to the production line environment yielded similar results.

R&M BENEFITS

Data from the field has not yet indicated any problems with the welded construction vehicle. Consequently, specific areas of R&M benefit cannot be identified. Generally, the R&M benefits will be in the areas of

Improved weld quality

Increased inspection rate

Reduced re-work

Acquisition cost is currently estimated at about $50K per unit, the specific cost being dependent upon the sophistication of data analysis and retention and output formating. Monitoring of dual simultaneous weld operations will obviously require additional AEWM capability with a commensurate cost increase.

Although the AEWM equipment is portable, production schedules would probably preclude the use of one unit among several stations. As a result, an AEWM unit would be required for each weld operation which required intensive quality control.

5.28/4

INCORPORATION INTO ACQUISITION PROCESS

The use of the AEWM on new production vehicles would logically be determined in accordance with the criticality of the weld, as identified during the design and development process, and its application assured by contractural requirements.

For depot repair or modification, the use of the AEWM would be required only if specified in the Modification-Work Order (MWO) or Depot Maintenance Work Directive (DMWR).

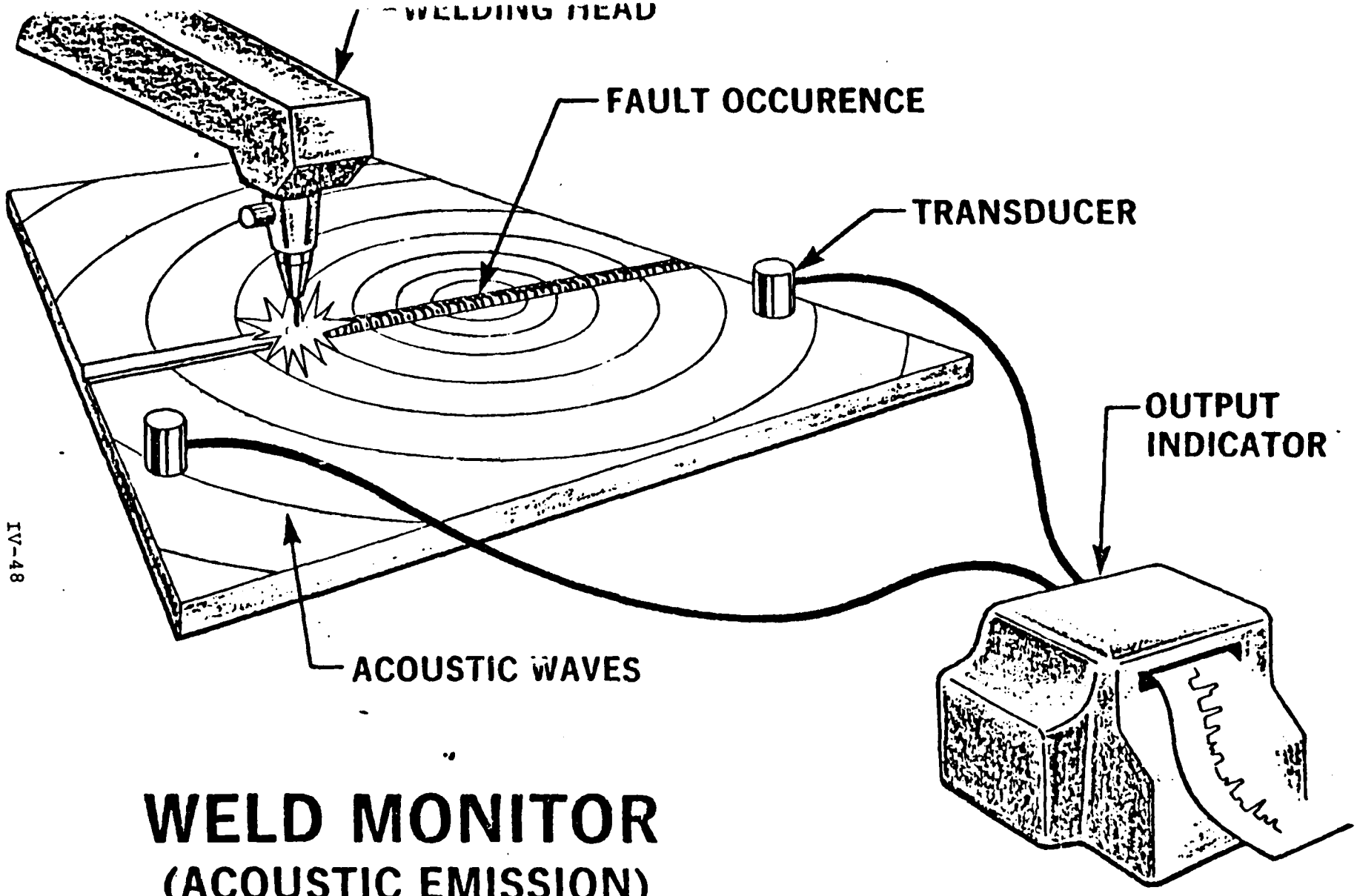

WELD MONITOR
(ACOUSTIC EMISSION)

COMPUTER AIDED WELD FLAW CLASSIFICATION

DESCRIPTION

Current ultrasonic inspection techniques rely on the subjective judgement of an operator. The computer aided approach releived the operator of the burden of attempting to classify weld discontinuities as to type, i.e., crack, lack of fusion, incomplete penetration, etc.

This is accomplished by programming the computer to recognize characteristics particular to the individual discontinuities and processing them in such a fashion that the computer makes an objective evaluation.

In conjunction with discontinuity sizing techniques, and with sufficient miniaturization, this system will have the capability to replace a major portion of currently required radiography. Additionally, it will add the ability to inspect weldments which, for reasons of safety or technical limitations, cannot be radiographed.

APPLICATION

This system can monitor weld quality at least as well as radiography and it offers significant weld inspection capability to facilities which do not have, and cannot justify, an extensive x-ray installation.

5.30/1

BENEFITS

A. The ability to monitor welding in production or modification at depot or lower levels.

B. By having the basic ultrasonic system available a facility can also perform a myriad of routine examinations not related to weld quality, i.e., wall thickness measurements, detection of plate laminations, disbonds between materials, and estimation of defect depths.

COSTS

At an estimated cost of $75,000 the system would be quite inexpensive compared to the investment in a radiographic installation (estimated 500K-1M). Operating costs are also significantly lower than radiography especially as regards consumable supplies.

5.30/2

RECOMMENDATIONS

The following recommendations are made in order to effect a major increase in the R&M of tank systems:

1. The development and implementation of a NDI method to ascertain correct blending of constituents for the production of homogeneous rubber for use in track components.

2. The development and implementation of appropriate inspection procedures for the detection of weak rubber to metal adhesive bonds in track components.

3. The development and application of a rapid and accurate method of identifying the proper intensity of shot peening on torsion bars and track pins so as to maximize fatigue life of cyclically loaded track and suspension components.

4. The implementation or intensified application of conventional NDI procedures, at depots, for the inspection of highly stressed areas of mission critical components, such as torsion bar splines, prior to re-use.

5. Development and implementation of a real-time, on-line weld monitor system to the production of weld intensive vehicles, such as the M1 tank, which would increase inspection rates, permit timely repairs, and improve the weld quality in general.

7

SUMMARY

Analysis of information gathered for this report indicates significant potential for the use of NDE in improving reliability and maintainability factors. By focussing only on suspension components, track components, and final drive components, in our current systems, NDE could effect a major increase in mean-miles-before-failure. For field maintenance and rebuild programs, we need nondestructive techniques for predicting remaining life of critical components. However, the material property which affects remaining life must first be identified before NDE can be called upon to contribute. There is however an opportunity, on a long-term basis, for sensing by in situ NDE techniques. A new generation of wear monitors, fatigue monitors, or crack detectors should be developed to increase the time to rebuild to longer intervals with some confidence. In future systems, the two basic thrusts in the materials area are track rubber and structural material development with emphasis on the latter being placed on composites. As stated earlier, we currently have no practical NDE for assessing rubber quality. The exploitation of nuclear magnetic resonance techniques may solve this problem through appropriate characterization studies. NDE technology can play an important role in enhancing the reliability and reducing the life cycle costs of tank systems if it is applied at proper sequences in the production of raw material, in the fabrication process, and during in-service inspection. NDE must be introduced at the earliest possible time in the process; it must be used to control the process, and material defects detected must be evaluated to determine their significance to quality and life cycle serviceability.

6.104-Hatch-2

TASK GROUP: TANKS

RECOMMENDATIONS	TARGET PROGRAM	FOR USE IN	GATEKEEPER & ACTION REQ'D	COST & TIME REQUIRED TO IMPLEMENT	READINESS IMPACT(ROI)
1. Develop System For Monitoring Rubber Material Properties	M1/M60	Production	DARCOM PMs-M1/M60	$2-5M	Cost of Replacement ↓ Greater Readiness ↑ Spare Parts ↓
2. Develop Method to Determine Rubber to Metal Bond Strength	M1/M60	Production Rebuild	"	$2-5M	"
3. Refine & Implement X-Ray Diffraction Techniques to Measure Residual Stresses in Torsion Bars and Track Pins	M1/M60	"	"	$1M	Fatigue Life ↑ 10% Spare Parts ↓ 10% Operational Readiness ↑
4. Implement NDE at Depot Rebuild for Critical Components	M60 (Current) M1 (Future)	Rebuild	"	$5M	Repair & Replacement Cost ↓ Operational Readiness ↑
5. Develop & Implement Weld Inspection Capability of Acoustic Emission, Computer-Aided Ultrasonic, & Weld Quality Monitoring Systems	M1 and other Tank Mods	Production & Rebuild	"	AE - $2M UT - $1-2M WQM - $2M	Mission Effectiveness ↑ Manufacturing Cost ↓

59/2-1

APPENDIX 1

T A N K S

VISITS

17 FEBRUARY 1983, WARREN, MI

OFFICE OF PM M-60

QA AND RAM ENGINEERING

OTTO PFEIFFER, QA DIRECTOR

ROBERT DeGROOTE, RAM ENGINEERING

OFFICE OF PM M-3

QA AND MAINTAINABILITY

PAUL LEITHEISER, RELIABILITY AND MAINTAINABILITY

BOHDAN KORDUBA, QUALITY ASSURANCE

GENERAL DYNAMICS, LAND SYSTEMS DIVISION

PRODUCT ASSURANCE

ROBERT BRAYER, M-1 QA MANAGER

59/12-1

T A N K S

M-60 PM

- TORSION BARS ECP
- RUBBER - TREADS (TRACK)
  - SEALS (MATCH)
- GEARS - NOISE
  - MATCHED SETS
- TRACK PINS (NOW DISCARDED)
- RECOIL SPRING POSSIBLE PROBLEM
- ALTERNATOR WARRANTY FOR AUDIT/ENGR. SERV. CONTR.
- FUEL INJECTION LINES
- WELDING - HULL (COST AND TIME)

59/12-2

M-1 PM

COMMENTS

- SENSORS, UNRELIABILITY
- OIL ANALYSIS - SOAP (SAMPLE, FOLLOW-UP, REMOVAL, RETEST, REBUILD)
- CABLE DISCONNECT TEST
- MONITORING: 3 BTLNS, 129 TANKS, 172,000 CUMUL. MI.

TOP 20 REPLACEMENT REPORT (SAMPLE):

- THERMAL IMAGER
- STARTER
- FIRE EXT. SYS.
- FUEL PUMP
- FUEL NOZZLE
- ENGINE ELECTRONIC CONTROL UNIT (TEST SET)
- ENGINE (THE 8 VEHICLE FIX TEST)
- HULL NETWORK BOX
- DRIVER INSTRUMENT PANEL
- TURRET NETWORK BOX
- TURRET DRIVE
- TRANSMISSION
- LASER RANGE FINDER
- TURRET TRAVERSE STABILIZER
- HYDRAULIC SYSTEM
- BALLISTIC COMPUTER

59/12-3

M-1

GENERAL DYNAMICS, LAND SYSTEMS DIVISION

GENERAL

- MANUFACTURER, USER, REBUILD/REPAIR
- CONDITION MONITORING TO EXTEND T-T-REB.
- DEGREE OF NDE IN MANUFACTURE
- TIME ALLOTTED TO SEMI-ANNUAL INSP (60)
- 6000 MI OVERHAUL, PLACE FOR REM. LIFE M.
- CORPORATE MEMORY DEV.:
  (1) 3 BTLN SAMPLE
  (2) M-60 REVIEW FOR M-1 DEV.
  (3) DEPOT DATA FEEDBACK
  (4) QUALITY OF FIELD REPORTS
- LESSONS LEARNED: WIRING, FASTENERS, PT
- USE OF INVEST TEAMS AND FIELD RETURNS
- DIALOG W/ PRODUCTION PERSONNEL
- RESPONSIBILITY FOR QAPs OF TDP
- MIS FOR QAPs PER DWG FOR ECPs

SPECIFIC

- SENSOR LIMITATIONS
- AMMO CASE STUD., 120 MM, DISBOND
- TORSION BARS 1/12,000 MI
- TRACK PAD AT 8-900 GOAL 2000 MI
- TRACK NO REBUILD $17K $25 MI
- ROAD WHEELS
- TEST SETS
- PLASTIC TANK LINERS
- TURBINE BLADES
- ENGINE DURABILITY VS RELIABILITY 1/2

59/12-4

M-60/M-60A1 COMPONENT LIFE CHARACTERISTICS

1974 TACOM REPORT
AD B0086174

STARTER	1,750	MMBR*
GENERATOR	2,500	
TRACK	2,500	
FUEL INJECTION	2,500	
ENGINE	3,200	
SPROCKETS	3,400	
AIR CLEAN BLW MOTOR	3,500	
ROAD WHEELS	4,000	
WHEELHUB SEALS	4,400	
TURBOCHARGER	4,800	
FINAL DRIVE	5,300	
TRANSMISSION	10,000	
ROAD WHEEL BEARING	11,000	

*MEAN MILES BETWEEN REPAIR

59/12-5

DRIVERS-APPARENT (NDE RELATED)

TORSION BARS

TRACK PADS

TRACK PINS

SENSOR RELIABILITY

TEST SET RELIABILITY

RADIOGRAPHY--COST/TIME/CONVENIENCE

FAILURE INFORMATION--FLOW/AVAILABILITY/QUALITY

REMAINING LIFE MEASUREMENT

59/12-6

TASK GROUP
ON
NDE
IN
FIXED-WING AIRCRAFT

IV A.2

INTRODUCTION

The Task Group on Fixed Wing Aircraft chose as the system for its case study the C-130 transport aircraft which is used by the Air Force, the Navy, the Marines and many other countries and commercial freight carriers. In the course of reviewing NDE experiences with this aircraft, it became obvious that, while this was a very good selection based upon the many years it has been in service, the NDE requirements specifically identified with it do not necessarily cover all the NDE problems associated with fixed wing aircraft. Consequently, the Task Group looked more broadly at other problems as well.

The Task Group report, therefore, is organized in the following manner:

a. C-130 Case Study

b. Generic Aircraft Structural Materials NDE Requirements

c. NDE of Electronic Components

d. Advanced Materials

e. NDE of Composite Materials

f. Summary

g. Table - Technology Related Items

h. Appendices

I. Air Force/Lockheed C-130 Report

II. Navy/Marines C-130 Fleet NDE Study

TASK GROUP ON FIXED WING AIRCRAFT
CASE STUDY
C-130

SOURCES OF DATA BASE:

(1) Discussions with NDI and engineering personnel at Warner Robbins Air Logistics Center for C-130 weapons system

(2) UR Reports from U.S. Navy Safety Center, Norfolk, Virginia

An analysis of this data base has indicated that NDE has played a significant role in the success of this weapon system which has been in continuous production for over a quarter of a century. A number of in-service inspections involving NDE have successfully been used to provide an effective maintenance program for the USAF, USN, USMC, USCC, USAFR, and ANG, as well as a number of commercial and foreign military users.

The Nondestructive Inspection Manual for the C-130 aircraft has proved to be an effective maintenance and management tool. It has saved inspection manhours and permitted new or expanded inspection requirements to be introduced by the simple transmittal of a TWX. The C-130 Nondestructive Inspection Manual has been periodically updated with additional inspection procedures for expanded area coverage. A current requirement exists for a complete revision of the T.O. 1C-130-36 series and expansion of this program to include an SRM-1C130-300 NDI Manual for Navy and Marine aircraft. Since the Navy does not

currently have such a manual, it could take advantage of the Air Force and manufacturers' experience and incorporate Navy peculiar experience to produce a really effective manual based on realistic and time-proven NDI requirements.

A Durability and Damage Tolerance Assessment Program (DADTA) was initiated in late 1970s to define critical structural areas and provide fatique crack growth rates and critical crack sizes. This permitted selection of inspection times and frequency intervals based on aircraft usage and NDI detectable crack sizes to provide for structural integrity with a known degree of reliability. Inspection intervals were established based on economic and allowable risk factors. This approach has been extremely successful and has not only prevented loss of aircraft but has allowed for early detection of damage to afford an economic repair. The following indicates the results of these inspections as of 3/28/83:

TCTO No.*	INSPECTION AREA	% AIRCRAFT DAMAGED
1C-130-1111	C-130A Center and Outer Wings	67
IC-130-1103	C-130B&E Outer Wing Drain Holes	20
IC-130-1107	C-130B&E Outer Wing Dry Bay	15
1C-130-1113	C-130B&E Outer Wing Fuel Tanks	65

*included in Appendix

The C-130 DADTA Program has also demonstrated that current weapon systems can benefit from a comprehensive structural analysis based on fracture criteria, even though the system was not originally designed to fracture criteria. Other systems which have successfully applied a DADTA are the C-141A/B and the C-5A.

58/9-2

Corrosion problems continually impact the structural durability of the C-130, particularly faying surface and crevice corrosion around galley and latrine areas. The inability of nondestructive inspection to detect corrosion at an early stage where treatment and repair is easily effected continues to have a significant impact on R&M costs.

58/9-3

GENERIC AIRCRAFT STRUCTURED MATERIALS REQUIREMENTS

The C-130 case study identified a few specific NDI needs that must yet be satisfied, including methods for the detection of corrosion in inaccessible areas and detection of fatigue cracks derivating from fastener holes in inner layers without requiring fastener removal.

The need for improved methods of detecting corrosion in faying surfaces, crevices, under paint, and in other inaccessible areas has very significant safety-of-flight implications. It is not only mandatory that affected areas be detected before structural integrity is impaired, but before the cost of replacing structures and coatings becomes prohibitive. Experience in depot maintenance has clearly shown this to be one of the major cost drivers in maintaining fixed wing aircraft.

From a broader perspective, however, there are many other pressing NDI needs applicable to fixed wing aircraft (and gas turbine engines) that must yet be satisfied. There are R&D programs under DoD support that are addressing many of these requirements, but not necessarily at the rate of effort that will allow their availability in the time frame required. Some of the needs have yet to be addressesd. Although some areas are limited due to lack of viable technical approaches, the primary limit is funding, particularly in the 6.3 Advanced Development and 6.4 Engineering Development areas, to allow exploitation of new technology.

A summary of many of the efforts underway and a brief assessment of their status follows:

a) Detection of Cracks Under Installed Fasteners

An ultrasonic system, recently developed by the Air Force, called Autoscan, will adequately detect cracks in outer layers down to 0.020 to 0.030 in. length. A low frequency eddy current device for inspecting inner layers is currently in prototype development and will start evaluation in May. Assuming successful demonstration, this effort could be accelerated to provide a needed capability at an earlier date.

b) Corrosion Detection

A joint Air Force-Navy program is just getting started to provide a portable neutron radiographic system for use in depot and field environments. Additional approaches in this area appear to be idea limited. A DoD/Industry workshop is being conducted by the Air Force in late May 1983 to seek viable approaches to this problem.

c) Improved Conventional NDI Equipment

Several efforts are underway to develop improved equipment for field, depot and manufacturing inspection. This includes, under Air Force sponsorship, a new ultrasonic system that is computer programable to automate the adjustment and calibration steps. Attempts are being made to get 6.4 funding for a new, more rugged, x-ray unit for field use. Increased sensitivity to detection of small surface flaws by eddy current is being developed by using very high frequency YIG and GaYIG coils. A Mantech program is planned to address the problem of obtaining reproducibility and consistency in ultrasonic transducers. Some of these activities could be accelerated with additional funding and additional projects could be initiated, including development of better standards for process calibration.

d) Improved Filmless Radiography

Because of the economic advantages of eliminating film, more effort is being directed toward developing the supporting technology to allow filmless radiographic methods to achieve sensitivity levels equipment to those attainable with film. Only limited efforts looking at detectors and image enhancement improvements are now underway. Data gathering, interpretation and storage technology is also required. This effort is definitely resource limited.

e) Automated Inspection Systems

A number of major programs are addressing the automation of inspection systems, particularly for manufacturing and depot inspection of critical, relatively high volume parts. Included are an eddy current system for inspecting critical engine disks, automated ultrasonic systems for inspecting structural forgings (engine and airframe), a sophisticated ultrasonic/eddy current system to allow implementation of "Retirement for Cause" principle to be applied to engine hardware, an integrated blade inspection system that includes automatic visual, penetrant, x-ray (conventional and computerized tomography) an infrared modules and a computerized axial tomography system for inspecting all size solid rocket motors. An automated ultrasonic inspection system is also being developed to allow adequate inspection of composite hardware in the field and depot. What is lacking in several of these programs is adequate funding to insure timely completion.

61/1-10

An example of a successfully applied and automated advanced NDE system is indicated in the following case study. The Capacitance Hole Probe Inspection System, developed by Lockheed-Georgia Company under USAF sponsorship, is expected to result in cost savings of $20M during the current procurement run of the C-5B system.

Perhaps more importantly, as evidence of the generic character of this NDE system, there are prospects for the use of the Capacitance Hole Probe for the F-18 and other advanced weapons systems.

5.38/1

CAPACITANCE HOLE PROBE INSPECTION SYSTEM

LOCKHEED-GEORGIA COMPANY
MARIETTA, GEORGIA

Joint fatigue life in aircraft critical structure is of prime concern in aircraft design and manufacture. Mechanical fastener systems selected for joining structure in these areas are highly dependent upon proper fit and hole configuration and surface integrity for achievement of joint fatigue life enhancement. Extensive experience and testing with fastener systems has provided definitions of fastener hole quality essential to joint integrity and fatigue life enhancement. The specific hole conditions of greatest significance fall into two basic categories: (1) hole configuration and (2) hole surface condition. Hole configuration factors include size and shape. The shape of the hole is straight cylindrical or tapered, depending upon the type of fastener system used. The tolerance envelope of straight cylindrical holes in critical, permanently fastened joints generally falls in the range of 0.003 inch and for tapered holes, 0.0025 inch for the commonly used sizes (3/16 through 3/8 inch diameters). Bell-mouthing, barrelling, ovality, and hole side straightness or taper must fall within the appropriate envelope. Hole surface condition must be of the appropriate finish, usually 125 RHR or smoother, and free of scratches, rifling, tool marks, chatter marks, and other discontinuities exceeding 0.001 inch in width. Other factors influencing joint integrity include hole angularity relative to sheet surface, usually 2° maximum, and gaps between structural components of the joint. Discrepancies can occur in all of these areas even with the use of controlled, hard mounted drilling equipment. Therefore a relatively high percentage of holes must be inspected for ensuring quality.

Conventional inspection techniques include air gauging holes for size and configuration and visual inspections for surface irregularities. These procedures are time consuming and largely dependent upon the Inspector's experience and judgement. Results are therefore qualitative in lieu of quantitative.

APPLICATION OF CAPACITANCE PRINCIPLE

During the early 1970's, a study was conducted of the possible theories or methods which could be used to provide quantitative inspections of fastener holes quickly and repeatedly. The concept of mounting one plate of a capacitor onto a probe of the size and shape of the fastener and allowing the structure to act as the other plate and electrically measuring the distance between the plates emerged as the most promising theory. Using a relatively large number of capacitor plates, each capacitor would "see" a small portion of the hole.

The principle is simply that the capacitance varies with the distance between capacitor plates. The capacitance of a perfect contact of the probe with the hole is determin by the area of the capacitor plate and the thickness of the applied dielectric material (ADM). If the hole wall is not in perfect contact with the capacitor element, the effective distance between capacitor plates is increased and the dielectric constant becomes a combination of ADM and air. The net result is a lower capacitance. These concepts are illustrated in Figure 1.

DEVELOPMENT OF THE SYSTEM

During the course of several years of a controlled level of effort, Lockheed-Georgia progressively developed the system through several stages. Each stage involved new concepts of engineering and manufacturing technology. The size and location of capacitor elements evolved from vertical strips through vertical and horizontal strips connected at one point each to a 48 individual segment configuration. Many materials were tried in the process of selecting the materials now used. Software, circuitry, mathematics, and algorithms were developed progressively until a breadboard system was produced which basically accomplished the desired inspections. The U. S. Air Force Materials Laboratory then entered the program with funding for prototype and eventual production unit fabrication.

DESCRIPTION OF THE SYSTEM

The resulting Capacitance Hole Probe (CHP) System is shown in Figures 2 and 3. The probe tip consists of 48 capacitor elements in six rows of eight around. Tips are currently designed in sizes 3/16 through 3/8 inch diameters for straight cylindrical and tapered fastener holes of depths up to four times the fastener diameter. The tip is attached to a reach cable, currently 20 feet in length, which is attached to the Electronics Unit (EU). A control box consisting of a test switch, 3 lights, and a hole number display and rocker switch is also attached to the EU by a length of cable. A Hewlett-Packard HP9835B computer is used with the system.

OPERATION OF THE SYSTEM

After entering the hole accept/reject criteria, the hole identify with size, type, etc., the probe tip serial number and other data desired into the computer, the probe tip is held in air for an initial reading. This action zeroes out environmental effects. The probe tip is then inserted into the hole to be inspected and the inspect button on the control box depressed. The actual capacitance is sequenced into the EU for each of the capacitor elements. The probe tip must be held steady in the hole for less than 1/2 second. Software then compares the capacitance readings to algorithms and to pre-input accept/reject criteria in the computer and the hole is accepted or rejected. This operation consumes 9 seconds after which the red or green light on the control box indicates acceptability of the hole. A record of the inspection is made on magnetic tape and at any time a print-out can be made showing the effective distance of each element from the hole wall.

INSPECTION RESULTS

The system, as currently developed, will accurately and repeatably ascertain the size and shape of holes of the sizes noted. It will determine hole diameters within 0.00004 inches.

Relative to scratch, surface finish, rifling, etc., the CHP system ascertains hole quality collectively based on algorithms developed from holes with known discrepancies. The system is currently used in production inspection of aircraft assemblies by the Lockheed-Georgia Company. It has successfully completed evaluations by AVCO Aerostructures Division, Nashville, Tennessee, and McDonnell Aircraft Company, St. Louis, Missouri, and currently under procurement consideration by both.

FUTURE POSSIBILITIES

The CHP system is a natural for use in automated hole drilling equipment and robotics systems. Programs have been prepared for pursuit of these advances. An internal version of the probe can be used for inspecting shafts or fasteners and could be used for matching fasteners to holes for controlled interference fits. A flattened probe could be used for the inspection of machined surfaces. Both the internal and flattened versions of the probe could be used with existing electronics and software.

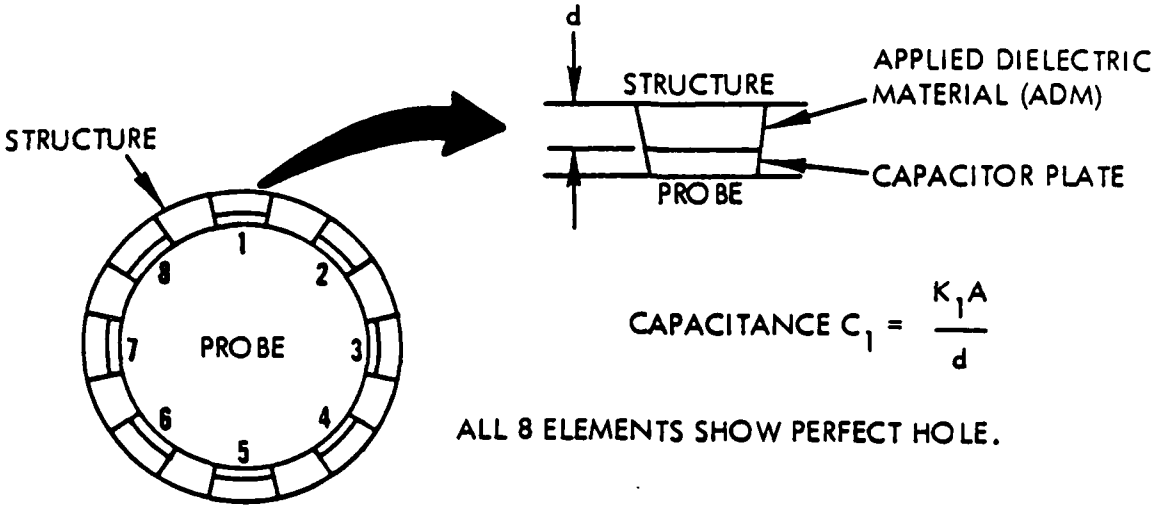

PERFECT HOLE

CAPACITANCE $C_1 = \frac{K_1 A}{d}$

ALL 8 ELEMENTS SHOW PERFECT HOLE.

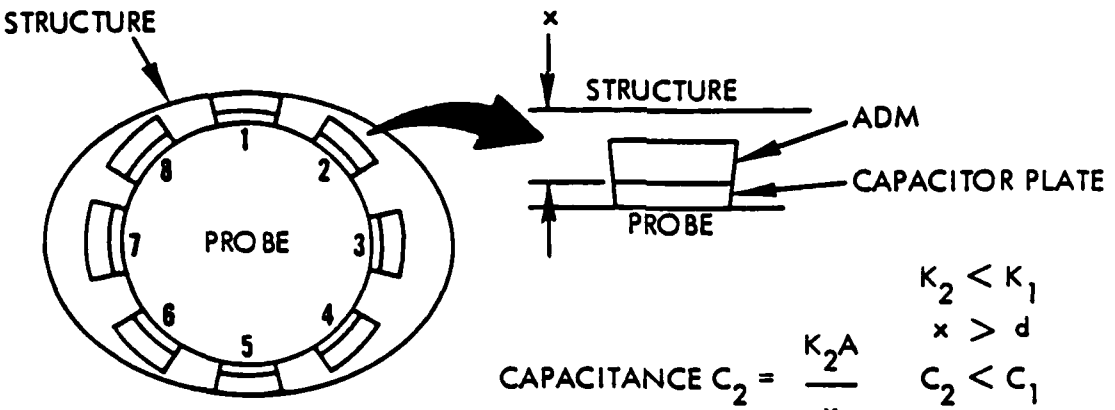

OVAL HOLE

CAPACITANCE $C_2 = \frac{K_2 A}{x}$

$K_2 < K_1$

$x > d$

$C_2 < C_1$

ELEMENTS 1 AND 5 SHOW GOOD HOLE.
ELEMENTS 2, 4, 6 AND 8 SHOW MARGINAL HOLE.
ELEMENTS 3 AND 7 REJECT HOLE.

Figure 1

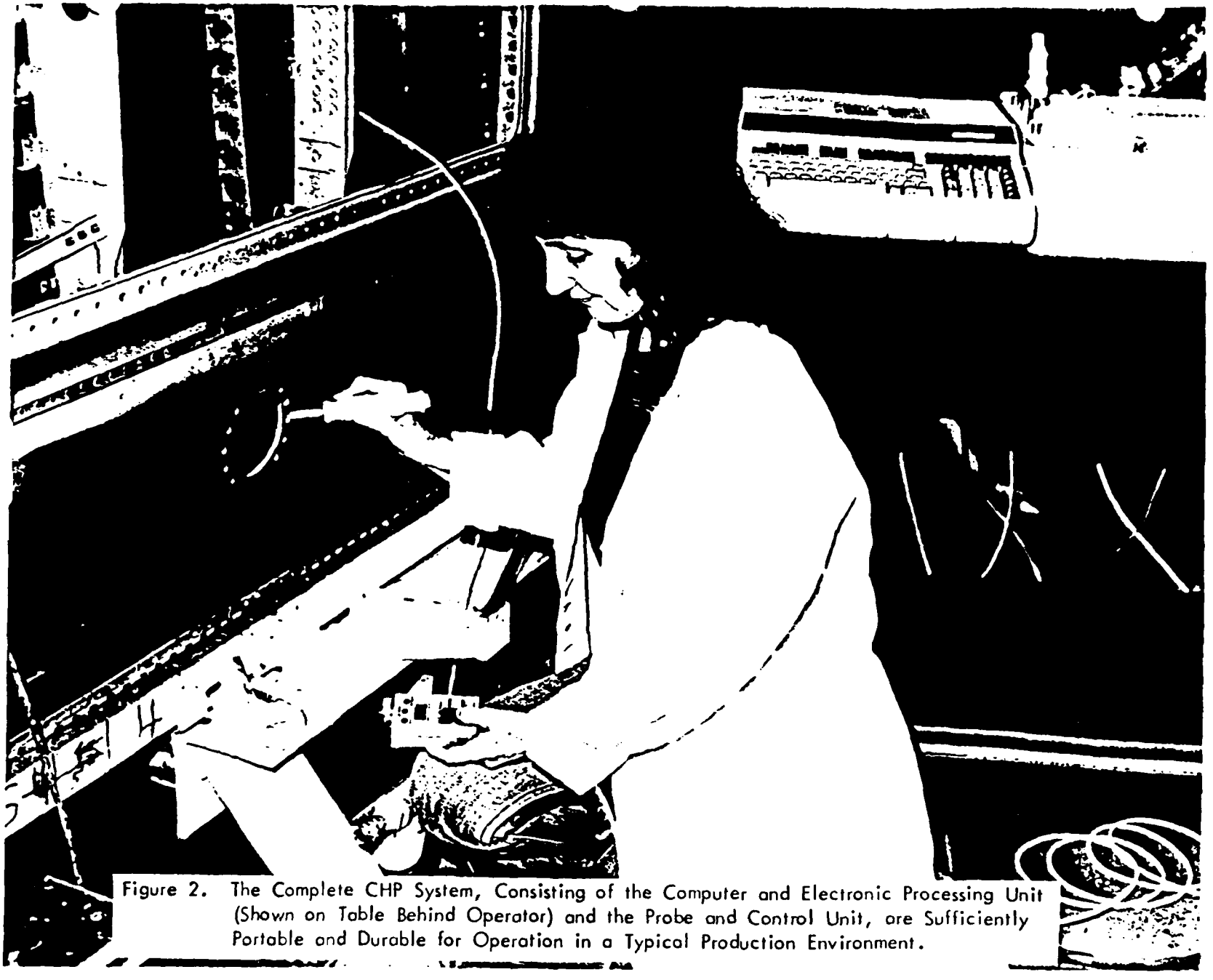

Figure 2. The Complete CHP System, Consisting of the Computer and Electronic Processing Unit (Shown on Table Behind Operator) and the Probe and Control Unit, are Sufficiently Portable and Durable for Operation in a Typical Production Environment.

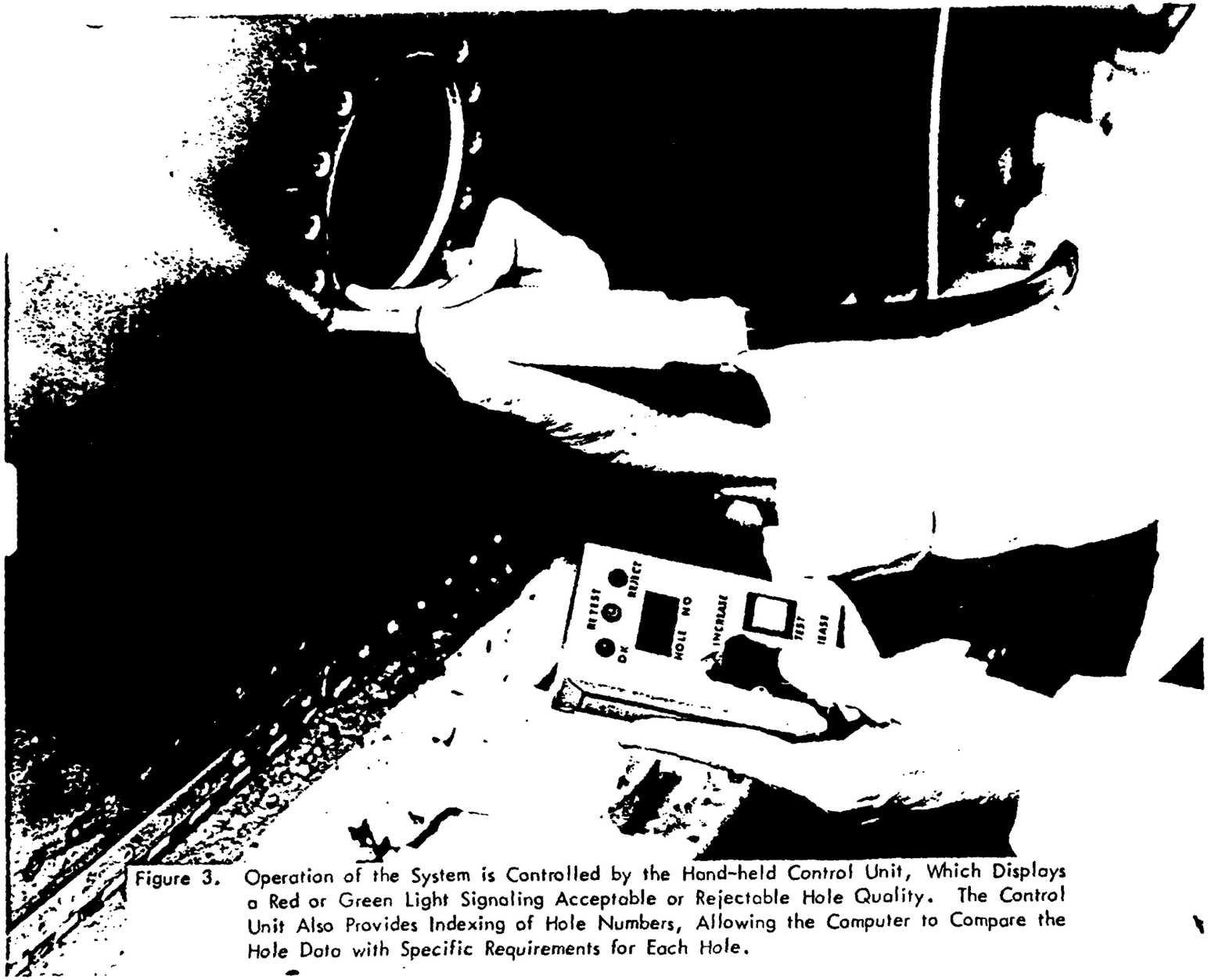

Figure 3. Operation of the System is Controlled by the Hand-held Control Unit, Which Displays a Red or Green Light Signaling Acceptable or Rejectable Hole Quality. The Control Unit Also Provides Indexing of Hole Numbers, Allowing the Computer to Compare the Hole Data with Specific Requirements for Each Hole.

NDE OF ELECTRONIC COMPONENTS

The entire field of electronic piece parts and hardware has a high failure/problem rate because of the lack of proccess controls (heat treating, anodizing brazing, soldering, electroplating). This failure rate applies equally to standard hardware or High Reliability items. Apparently, this condition is caused by lack of process knowledge or the importance of correct processing is considered as incidental since the function of the part is not structural but electrical. The application of MIL-Q-9858 or equivalent and applicable processing specifications would alleviate this condition. Further, the application of NDE, as required during manufacturing, would prevent the placing of marginal to defective parts being placed in inventory. During testing, only the electrical characteristics are evaluated to determine part acceptability.

A rapid, quantifiable NDE method for solderability needs to be developed for electronic piece parts. This would equally benefit all users, manufacturers and DoD.

61/1-5

NDE OF COMPOSITE MATERIALS

Composite materials (graphite/epoxy, metal matrix, etc.) present their own unique NDE requirements. Generally the end product is evaluated through the use of ultrasonics. For manufacturing, the method of application of ultrasonics is effective but slow. The parts are largely two-dimensional, and therefore complex inspection and recording equipment is not utilized.

The use of contoured or three-dimensional parts is being retarded because of manufacturing and NDE (inspection) capabilities. The manufacturing capabilities are being improved through tape laying machines and improved tooling concepts. The inspection capabilities for complex geometrics are not keeping pace with manufacturing. Little is being accomplished on 3D systems.

In field applications, manual methods are available and automated methods are in development.

61/1-6

ADVANCED MATERIALS

Powdered metals and metal matrix, fiber reinforced, including RST (Rapid Solidification Techniques), have been investigated in research for some time. They have now progressed to application and near production usage. NDE methods, along with effects of defects programs, need to be a part of these application studies.

61/1-7

SUMMARY

This brief discussion has been intended to display identified needs for NDE to support the reliability and maintainability of fixed wing aircraft, as well as review the extent of activity currently underway to meet those needs. The key requirement areas, estimated cost (time, dollars) and anticipated ROI's are given in the attached table.

9.8

TASK GROUP: FIXED-WING AIRCRAFT

RECOMMENDATIONS	TARGET PROGRAM	FOR USE IN	GATEKEEPER & ACTION REQUIRED	COST & TIME REQUIRED TO IMPLEMENT	READINESS IMPACT (ROI)
Corrosion Detection	Multi-system	F,D	AFWAL/ NAVAIR	$15M-5yr	↓ Downtime ↑ Operational Readiness ↓ Insp. Time and Costs $2B/yr
NDE of Electronics	Multi-system	P,D,F	AFWAL/ NAVELEX/ AMMRC	$1M-2yr	↓ Repair & Replacement ↑ Mission Effectiveness ↓ Spare Parts 30%
NDE of Composite Materials	AV8B, F-18, F-15, F-16, Multi-system	P,D,F	AFWAL/ NAVAIR	$10M-4yr	↓ Downtime & Costs ↓ Repair & Replacement ↓ Manpower ↑ Insp.Proficiency High
Improved Conventional NDI Equipment	Multi-system	P,D,F	AFWAL/ NAVAIR/ AMMRC	$5M-5yr	↓ Downtime & Insp. Costs ↑ Inspector Proficiency High
Filmless Radiography	Multi-system	P,D,F	AFWAL/ NAVAIR/ NSWC/ AMMRC	$6M-4yr	↓ Downtime & Insp. Costs ↓ Cost by 50% Radiography
Automated Inspection Systems	Multi-system	P,D,F	AFWAL/ NAVAIR/ AMMRC	$25M-5yr	↓ Downtime & Insp. Costs ↑ Inspector Proficiency Very High

APPENDIX 1

AIR FORCE/LOCKHEED C-130 FLEET NDI

The following answers to questions prepared on C-130 Reliability and Maintainability by Fixed Wing Task Group of OSD/R&M Study NDE Committee were furnished by NDI and engineering personnel at WR-ALC.

Question: If NDE had been used, what mishap or unreliability could have been precluded?

Answer: If the Reliability Centered Maintenance (RCM) program had not removed the T.O. 1C-130-6 inspection requirement for NDI inspection of the outer wing lower surface drain holes at outer wing station 170, the 18-inch long crack found in S/N 62-1842 (LAC 3805) at Van Nuys ANG Base could have been detected when repairable. The RCM program is a statistical program which permits deleting inspection requirements when no damage has been found after a number of inspections have been performed.

Question: Where has NDE been used to preclude a mishap and/or situation of unreliability?

Answer: This question is too general. It is the purpose of NDE to accomplish just this task, and its application is universal. There are many areas where inspection procedure accomplishment is locating very small cracks/ damage which is conducive to T.O. 1C-130-3 repair before

61/1-11

large damage occurs. TCTO 1C-130-1107, -1111, and -1113 were issued as a result of DADTA findings and has resulted in locating fleet damage in structure in many areas before the damage had progressed to the critical size.

Question: What NDE shortcomings exist now?

Answer:
(a) Reliable method for detection of light corrosion in faying surfaces.
(b) Ability to locate small cracks in second layer.
(c) Lack of standardization for NDE equipments.
(d) No established reliability goals for this aircraft.
(e) Lack of incentive to remain in military service as NDE trained because private industry is offering more money and chance for advancement.
(f) Process of introducing new NDE equipments into inventory is long and cumbersome.
(g) Reporting of NDE data is not reliable at the present time.

Question: How can NDE be used in the future as a management tool for DoD to become "NDE Operationally Smart"?

Answer:
(a) Implementation of Aircraft Information Retrieval System (AIRS). This is a system of individual aircraft status, storage of data, damage and locations, repairs, etc.
(b) Implementation of Individual Aircraft Tracking (IAT) program. This is a program for individually tracking usage of aircraft based upon fracture rather than fatigue analysis.
(c) Provide new and better NDE equipments.

61/1-12

(d) Develop New NDE techniques.

(e) Provide better training of personnel:

(1) Better certification programs.

(2) Provide training on each piece of NDE equipment rather than in a particular NDE discipline alone.

(3) Provide for training for each procedure on each aircraft.

(4) Provide better procedure manuals.

(5) Provide valid selection criteria for inspection personnel.

(f) In the NDE management area, provide:

(1) Better system of reporting NDE results.

(2) Decrease the quantity of forms required in the reporting system.

(3) Provide managers with enforcement power, which is lacking now.

(g) Remove structural applications from RCM program.

(h) Provide life-like standards for NDE comparison.

(i) Establish practical reliability goals for the system.

Question: Provide history and TCTOs involving NDE.

Answer: (a) The original inspection manual, T.O. 1C-130A-36 (36), was originally written and released with anticipated failures included.

(b) The -36 manual was expanded after static and fatigue test programs were concluded and results evaluated.

(c) Aircraft Condition Inspection (ACI) program, Critical Inspection Evaluation (CIE) program, and Lead-the-Force program data results updated the -36 manuals before fleet aircraft experienced flight hour/mission requirements.

61/1-13

(d) Fleet aircraft received T.O. 1C-130-857 (ECP 954) which modified the outer wings to increase remaining fatigue life; new -36 procedures were added to monitor the structural areas affected by the modifications.

(e) Fleet aircraft received T.O. 1-C-130-819 which changed the center wing on all but C-130A and C-130D aircraft. New ACI inspection procedures were added in the -36 manual to inspect C-130B and C-130E center wings.

(f) Corrosion protection was added on the top surfaces of all C-130 wings. Internal corrosion protection was added and increased NDE possibilities. Material changes were made, hard spots were redesigned, and edge margins were increased to increase fatigue life.

(g) Contracted for new outer wings for C-130B and C-130E aircraft.

(h) Durability and Damage Tolerance Assessment (DADTA) program initiated:

(1) Defined critical areas and furnished crack growth rates.

(2) Crack growth rate curves generated permitted selection of inspection initiation and frequency times.

(3) Permits use of crack sizes for detection which assures structural integrity. Permits setting inspection interval for reliability and economics while maintaining safe aircraft operation.

(4) Permits updating -36 inspection manual prior to aircraft reaching critical crack sizes in the fleet.

61/1-14

(5) New ACI inspections will begin to look at critical areas prior to predicted failures in the fleet to validate DADTA findings.

(6) As a result of DADTA analyses, USAF issued a number of TCTOs to inspect the fleet in the critical inspection areas. Approximately 560 aircraft in the C-130B and C-130E fleet will be inspected. Resluts as of 3/28/83 were as follows:

TCTO No.	Inspection Area	%Aircraft Found Damaged
1C-130-1111	A-model, complete center and outer wings	67
1C-130-1103	Outer Wing drain holes in dry bay, B&E models	20
1C-130-1107	B&E model, outer wing dry bay area	15
1C-130-1113	B&E model, outer wing fuel tank areas	65

(i) The ACI program will be accomplished in conjunction with the contractor's equivalent program being performed on commercial aircraft with high flight hours.

(j) The -36 updating program is continuous: wing section updated in 1977 and 1982, fuselage and empennage to be updated in 1983. NDE equipments are being slowly modernized, and training of base and depot level NDE personnel to perform new procedures with new equipments is taking place.

(k) Field level, contractor level, and manufacturer level inputs have been made for updating T.O.33B-1-1 (USAF NDE Training Manual).

61/1-15

(l) NDI Managers Conferences are taking place on a scheduled basis, an NDI Newsletter is being released on a regular basis, and USAF inputs are being made to manufacturers after NDE product testing. Participation in reliability testing programs and individual proficiency testing programs have recently taken place.

(m) New equipments and techniques are being evaluated on a continuous basis.

(n) Three Value Engineering projects on C-130 recently saved USAF approximately $225,000 over five years.

61/1-16

DEPARTMENT OF THE AIR FORCE
TECHNICAL ORDER

TO 1C-130-1111
DATA CODE: 0162535
1 NOVEMBER 1982
Rescission date: 1 November 1983

SAFETY TIME COMPLIANCE TECHNICAL ORDER

INSPECTION OF CENTER WING AND OUTER WING CRITICAL AREAS, C-130 AIRCRAFT

1. APPLICATION.

a. This TCTO is applicable to the following C-130 aircraft:

MODEL	SERIAL NO.
AC-130A	53-3129 54-1623, 54-1628, 54-1630 55-0011, 55-0014, 55-0029, 55-0046 56-0469, 56-0509
C-130A	54-1638, 54-1639 55-0003, 55-0004, 55-0008 55-0022 through 55-0027, 55-0030 through 55-0032 55-0035, 55-0037, 55-0041 56-0468, 56-0470, 56-0471, 56-0475, 56-0479, 56-0483 56-0485 through 56-0487, 56-0493, 56-0494, 56-0496 56-0497, 56-0500, 56-0501, 56-0503, 56-0507, 56-0508 56-0513, 56-0517, 56-0518, 56-0522, 56-0523, 56-0525 56-0527, 56-0529 thru 56-0531, 56-0534 through 56-0537 56-0540, 56-0541, 56-0543, 56-0550, 56-0551 57-0453, 57-0455, 57-0456, 57-0458 thru 57-0461 57-0463, 57-0464, 57-0469 thru 57-0471 57-0474, 57-0477, 57-0478, 57-0480 through 57-0483 57-0510 through 57-0513, 57-0515, 57-0516, 57-0519 57-0520, 57-0522, 57-0524
C-130D	57-0486, 57-0489 through 57-0494

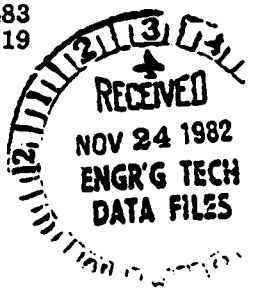

NOTE

The following aircraft are exempted from the outer wing inspection requirements of this TCTO.

MODEL	SERIAL NO.
C-130A	53-3132, 53-3135 54-1631, 54-1633 through 54-1637, 54-1640 55-0003, 55-0007, 55-0010, 55-0015, 55-0018 55-0028, 55-0036, 55-0047 56-473, 56-478, 56-0481, 56-484, 56-0495, 56-0498 56-0511, 56-0524, 56-0538, 56-0544, 56-0547 57-457, 57-0466, 57-0469, 57-0473, 57-0476 57-0479, 57-487, 57-514, 57-0521

b. Kits are not required for compliance with this inspection TCTO.

c. TCTO proofing, as prescribed by TO 00-5-15, was accomplished (for center wing and outer wing dry bay areas) 24 September 1982 on C-130A aircraft, serial No. 56-0503, by 118TAW at Berry ANG Field, Nashville TN. TCTO proofing for outer wing tank areas was accomplished 7 November 1982 on C-130A aircraft, serial No. 56-0541, by WR-ALC/MA at Robins AFB GA.

2. PURPOSE.

a. This TCTO directs inspection of outer wing at:

(1) Lower surface spanwise splices, OWS 6 to 360, L/R.

(2) Lower forward beam cap, OWS 146 to 212, L/R.

(3) Lower rear beam cap, OWS 146 to 212, L/R.

(4) Lower surface panels under the engine drag fitting, nacelle fairing attach angle and at footed rib attachments, OWS 162 and 197, and drain pan hole and attaching rivets, L/R.

(5) Lower rear beam cap, web and rib attach at OWS 162, L/R.

(6) Front and rear beam lower caps and panels from OWS 16 to 144, 212 to 360, L/R.

(7) Front beam lower cap, panel No. 1, web, and corner fitting, at OWS 15.7.

(8) Lower surface panel risers at rib cap to panel attachments, OWS, 26, 54, 108, 126, 180, 249, 266, 283, 300, 317, 352, 369, 386, 403 and 420, L/R.

(9) Lower surface panels at footed rib attachments, OWS 18, 72, 90, 231 and 334, L/R.

(10) Lower surface panel No. 4 risers at fuel boost pump attachment, OWS 11 and 220, L/R.

(11) Lower surface panels No. 3 and No. 4 and rear beam lower cap at panel No. 4 runout, OWS 287.3.

(12) Rear beam lower cap and web at flap track rib, OWS 293, L/R.

(13) Lower front beam cap at termination of pylon reforcing beam, OWS 303 and 350, L/R.

(14) Lower surface stiffened risers inboard of OWS 36, L/R.

(15) Lower king pin stiffeners and panel risers, L/R.

b. This TCTO also directs inspection of center wing at:

(1) Lower surface panels at end of rainbow fitting and under nacelle fairing attach angle and engine drag fitting, CWS 203 to 214 and CWS 178.

(2) Lower surface panel No. 1, CWS 178 to 203, L/R.

(3) Lower surface panels at fairing attach holes, CWS 80.0, L/R.

(4) Lower rear beam cap, CWS 199 area, L/R.

(5) Front and rear lower beam cap at CWS 80.5, L/R.

(6) Lower forward beam cap, CWS 172 outboard, L/R.

(7) Lower aft panel at footed rib, CWS 62.5, L/R.

(8) Lower doublers between CWS 61.5 and 80, L/R.

(9) Upper surface panel No. 1 at front beam cap, CWS 220 left to 220 right.

3. WHEN TO BE ACCOMPLISHED.

During depot level maintenance (as scheduled by WR-ALC/MMSP).

4. BY WHOM TO BE ACCOMPLISHED.

Depot level maintenance.

5. WHAT IS REQUIRED.

a. Supply Information and Requirements.

(1) KITS/PARTS/MATERIALS REQUIRED.

The following parts/materials required to comply with this TCTO are not furnished in a kit but will be furnished by depot/contract teams accomplishing this TCTO.

QTY	STOCK NO.	PART NO.	NOMENCLATURE	SOURCE
*	8030-00-584-4399	MIL-S-8784	Sealing Compound Class A2	AF Supply
	or	*or*	*or*	
*	8030-00-598-2910	MIL-S-8784	Sealing Compound Class B1/2	AF Supply
		SEALS FOR C-130A/D AND AC-130A AIRCRAFT		
2	5330-00-599-0400	339011-5	Packing, Preformed	AF Supply
2	5330-00-599-6281	339011-6	Packing, Preformed	AF Supply
2	5330-00-653-2020	357741-1	Seal	AF Supply
2	5330-00-547-7238	357741-2	Seal	AF Supply
2	5330-00-547-7239	357741-3	Seal	AF Supply
2	5330-00-547-7240	357741-4	Seal	AF Supply
		NOTE		
		The following screws are applicable to C-130A/D and AC-130A aircraft top wing access panels.		
**	5305-00-558-2585	NAS583-8	Screw	AF Supply
**	5305-00-539-7246	NAS583-10	Screw	AF Supply
		NOTE		
		The following screws are applicable to all series C-130A aircraft top wing access panels.		
**	5305-00-639-7256	NAS583-3	Screw	AF Supply
**	5305-00-576-1223	NAS583-5	Screw	AF Supply
**	5305-00-639-7249	NAS583-7	Screw	AF Supply
**	5305-00-550-9474	NAS583-9	Screw	AF Supply
**	5305-00-576-0450	NAS585-7	Screw	AF Supply

3

NOTE

The following bolts are applicable to C-130A/D and AC-130A aircraft access door OWS 00.0 and OWS 214.

QTY	STOCK NO.	PART NO.	NOMENCLATURE	SOURCE
**	5306-00-680-6428	NAS1003-5A	Bolt	AF Supply

NOTE

The following bolts are applicable to C-130A/D and AC-130A aircraft. serial numbers 53-3129 through 54-1528 center wing access panels.

**	5305-00-639-7254	NAS584-5	Bolt	AF Supply
**	5305-00-639-7253	NAS584-6	Bolt	AF Supply
**	5305-00-527-4424	NAS584-7	Bolt	AF Supply

NOTE

For all other C-130A/D and AC-130A aircraft, use the following bolt on center wing access panels.

**	5305-00-551-6731	NAS585-6	Bolt	AF Supply

* Exact quantity determined at time of inspection/rework. Listed items are 1/2-pint kits (estimated five kits required for each aircraft).

** Exact quantity determined at time of inspection/rework.

(2) ACTION REQUIRED ON ITEMS IN STOCK. Not applicable.

(3) KITS/PARTS/MATERIALS REQUIRED TO MODIFY ITEMS IN STOCK. Not applicable.

(4) DISPOSITION OF REMOVED AND REPLACED PARTS/MATERIAL.

NOTE

Parts/materials removed, but not listed herein, will be disposed of as scrap material/shop residue.

(5) DRAWINGS/INSTRUCTIONS REQUIRED. Not applicable.

(6) SIZE, WEIGHT, AND COST OF KITS. Not applicable.

(7) DISPOSITION OF KITS. Not applicable.

b. Personnel Information and Requirements.

NOTE

The following information is applicable for all aircraft listed in paragraph 1b. except those aircraft exempted from outer wing inspection requirements.

4

WORK PHASES	AFSC SKILLS	MAN-HOU
Defueling	Aircraft Maintenance Specialist (43151)	40.0
Jacking and Mooring Aircraft	Aircraft Maintenance Specialist (43151)	12.0
Gaining Access	Aircraft Maintenance Specialist (43151)	230.0
Purging/Depuddling	Aircraft Fuel System Specialist (423X3)	30.0
*Removal and Storage of Foam (If Applicable)	Aircraft Fuel System Specialist (423X3)	650.0
Inspection	NDI Technician (42772)	300.0
*Reinstallation of Foam (If Applicable)	Aircraft Fuel System Specialist (423X3)	650.0
Reassembly	Aircraft Maintenance Specialist (43151)	230.0
Removal of Mooring and Jacks	Aircraft Maintenance Specialist (43151)	15.0
Leak Check	Aircraft Fuel System Specialist (423X3)	130.0
Refueling	Aircraft Maintenance Specialist (43151)	10.0
	** TOTAL	2297.0

* For aircraft with explosion suppressant foam installed.

** Total for standard aircraft without foam installation is: 997.

NOTE

The following information is applicable for those aircraft listed in paragraph 1c. which are exempted from outer wing inspection requirements.

WORK PHASES	AFSC SKILLS	MAN-HOUI
Defueling	Aircraft Maintenance Specialist (43151)	40.0
Jacking and Mooring Aircraft	Aircraft Maintenance Specialist (43151)	12.0
Gaining Access	Aircraft Maintenance Specialist (43151)	65.0
Inspection	NDI Technician (42772)	75.0
Reassembly	Aircraft Maintenance Specialist (43151)	75.0
Removal of Mooring and Jacks	Aircraft Maintenance Specialist (43151)	15.0
Refueling	Aircraft Maintenance Specialist (43151)	10.0
	TOTAL	292.0

5

c. Special Tools and Fixtures Required. Not applicable.

6. HOW WORK IS ACCOMPLISHED.

a. Make aircraft safe for maintenance and/or inspection in accordance with TO 1-1-3, section IV.

b. Defuel aircraft in accordance with TO 1C-130A-2-1 and TO 1C-130A-2-2.

CAUTION

If aircraft is to be worked on a ramp, out in the open, it must be moored in accordance with TO 1C-130A-2-2.

c. Support aircraft on nose and wing jacks in accordance with TO 1C-130A-3 ("Jacking Instructions - Wing Repairs, Outer Wing Installed on Aircraft") and TO 1C-130A-2-2.

WARNING

When sections of foam are to be removed to gain access for tank/component maintenance, use air purging methods described in TO 1-1-3. As foam components are removed, air purging must continue throughout the operation to preclude build-up of combustible vapors. A fire safe level of five percent lower explosion limit (LEL) or below must be maintained during all tank maintenance.

CAUTION

Use special care to protect foam material from contamination. Small particles will adhere to wet surfaces and later wash into the fuel. Place removed foam in clean, dustproof, preferably static-conductive containers as specified in TO 1-1-3 upon removal from tanks.

NOTE

For those aircraft which have explosive suppressant foam installed, it may be easier to handle the foam by removing it from individual cells one at a time, completing NDI inspection/maintenance and then reinstalling the foam.

d. Purge fuel tanks in accordance with TO 1-1-3, section IV("Air Purge Procedures (Blow and Exhaust)").

6

e. Remove foam in accordance with TO 1-1-3, section IV ("Foam Removal Procedures") and store foam in accordance with TO 1-1-3, section IV ("Storage of Foam").

CAUTION

The blue foam has low tear strength when wetted with fuel. Care shall be exercised in removing components to avoid tearing or destroying individual components.

f. Dry, package, and store removed tank foam in accordance with TO 1-1-3 until it is reinstall. (For duration required to complete in-tank inspection/maintenance, packaged foam components may be stored in fuel cell maintenance facility, provided that approval of fire marshall and ground safety office is obtained.)

WARNING

Before starting depuddling operation, check fuel tanks for a fire safe condition of five percent or lower of the lower explosion level (LEL). Air purge until an LEL of five percent or lower is obtained. Failure to do so may result in health and fire hazards.

g. Depuddle aircraft in accordance with TO 1-1-3, section IV ("Depuddling Procedures").

h. Remove components specified in TO 1C-130A-36.

NOTE

For OWS 18 through 544, fuel cell and dry bay area, refer to and comply with Safety Precautions, TO 1C-130A-36 (section I) and TO 33B-1-1 when performing eddy current inspections.

i. For inspection equipment required, see TO 1C-130A-36.

j. Clean/depaint inspection areas as specified in TO 1C-130A-36.

k. Repair defects in accordance with TO 1C-130A-3. If repair is not listed in TO 1C-130A-3, contact WR-ALC/MMSRAA for instructions.

l. At completion of inspection and/or repair of defective components, install foam, if applicabl and close up that area.

m. Install fuel cell access panels in dry bays in accordance with TO 1C-130A-23, section II ("Sealing Procedures"), using MIL-S-8784 sealant/seals as applicable.

n. For access panels on top of wing to No. 1 and No. 4 fuel cells, install new seals and MIL-S-8784 sealant. Torque fasteners in accordance with TO 1-1A-1, section IX.

o. After completion of close-up of center and outer wings or areas affected, perform a leak check in accordance with TO 1C-130A-2-5.

p. Return aircraft to normal service if no leaks are found or when leaks are repaired.

q. Report results of this inspection by priority message to WR-ALC/MMSRAA/MMSP/MMSF as follows: aircraft MDS, aircraft serial number, wing serial number, location of defect, aircraft hours, left/right wing, OWS, crack location, and defect orientation.

r. Submit a negative report if no defects are found.

7. SUPPLEMENTAL INFORMATION.

a. Defuel/Purge.

Defueling/purging of the aircraft shall be accomplished prior to accomplishing this TCTO (see paragraph 6).

b. Operational Checkout Requirements.

The system/equipment shall not require an operational checkout after TCTO compliance and prior to release for normal operations.

c. Weight and Balance Information.

There are no weight or balance changes resulting from the instructions contained herein.

d. Technical Orders Affected.

TO NO.	DATE OF BASIC ISSUE
1C-130A-36	15 July 1971

8. RECORDS.

a. Action Required on Maintenance Records.

(1) *An AFTO Form 349 will be submitted for each applicable C-130 aircraft by serial number.* Report TCTO compliance in accordance with TO 00-20-2-2, table 2-3.

(2) An entry is required on AFTO Form 95 (Basic Aircraft).

(3) This TCTO does not affect operational performance, limitations, or procedures for recording in block H of AFTO Form 781K.

b. Action Required on Supply Records.

Supply records are not affected by this TCTO.

c. Modification Identification Marking. Not applicable.

BY ORDER OF THE SECRETARY OF THE AIR FORCE:

JAMES P. MULLINS, General, USAF
Commander, AFLC

CHARLES A. GABRIEL, General, USAF
Chief of Staff

Prepared by WR-ALC/MMSRAC (AV 468-6345)

8

DEPARTMENT OF THE AIR FORCE
TECHNICAL ORDER

TO 1C-130-1111C
DATA CODE: 0162621
15 NOVEMBER 1982

★ SUPPLEMENT TO BASIC TECHNICAL ORDER ★

INSPECTION OF CENTER WING AND OUTER WING CRITICAL AREAS, C-130 AIRCRAFT

NOTE

This TCTO supplements TO 1C-130-1111, data code 0162535, dated 1 November 1982, to make corrections as indicated herein. No additional work is required by this supplement. A SUITABLE REFERENCE TO THIS SUPPLEMENT WILL BE MADE ON PAGE 1 AND OPPOSITE EACH AFFECTED PARAGRAPH IN THE BASIC PUBLICATION.

1. Paragraph 1a. of the basic TCTO is amended to delete aircraft serial No. 55-0003 from C-130A effectivity and to add aircraft serial No. 55-0033 to C-130A effectivity listing; to add aircraft serial No. 57-0484 to C-130D effectivity listing; and to delete aircraft serial No. 57-0469 from the exempted C-130A effectivity listing.

2. Paragraph 2 of the basic TCTO is amended in its entirety to read as follows:

RECEIVED
DEC 8 1982
ENGR'G TECH
DATA FILES

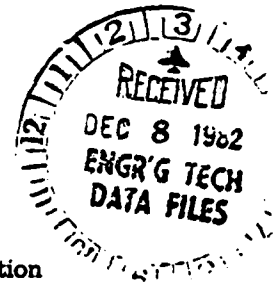

2. PURPOSE.

NOTE

Inspection numbers referenced herein are identified in Inspection Index Table, section IV of TO 1C-130A-36.

a. This TCTO directs inspection of outer wing at:

(1) Lower surface spanwise splices, OWS 6 to 360, L/R (inspection numbers OW-15 and OW-16).

(2) Lower forward beam cap, OWS 146 to 212, L/R (inspection numbers OW-17 and OW-18).

(3) Lower rear beam cap, OWS 146 to 212, L/R (inspection No. OW-46).

(4) Lower surface panels under the engine drag fitting, nacelle fairing attach angle and at footed rib attachments, OWS 162 and 197, and drain pan hole and attaching rivets, L/R (inspection No. OW-47).

(5) Lower rear beam cap, web and rib attach at OWS 162, L/R (inspection No. OW-48).

(6) Front and rear beam lower caps and panels from OWS 16 to 144, 212 to 360, L/R (inspection No. OW-37).

(7) Front beam lower cap, panel No. 1, web and corner fitting, at OWS 15.7 (inspection No. OW-38).

(8) Lower surface panel risers at rib cap to panel attachments, OWS 26, 54, 108, 126, 180, 249, 266, 283, 300, 317, 352, 369, 386, 403 and 420, L/R (inspection No. OW-41).

(9) Lower surface panels at footed rib attachments, OWS 18, 72, 90, 231 and 334, L/R (inspection No. OW-21).

(10) Lower surface panel No. 4 risers at fuel boost pump attachment, OWS 11 and 220, L/R (inspection No. OW-42).

(11) Lower surface panels No. 3 and No. 4 and rear beam lower cap at panel No. 4 runout, OWS 287.3 (inspection No. OW-43).

(12) Rear beam lower cap and web at flap track rib, OWS 293, L/R (inspection No. OW-44).

(13) Lower front beam cap at termination of pylon reinforcing beam, OWS 303 and 350, L/R (inspection No. OW-49).

(14) Lower surface stiffened risers inboard of OWS 36, L/R (inspection No. OW-31).

(15) Lower king pin stiffeners and panel risers, L/R (inspection No. OW-7).

b. This TCTO also directs inspection of center wing at:

(1) Lower surface panels at end of rainbow fitting and under nacelle fairing attach angle and engine drag fitting, CWS 203 to 214 and CWS 178 (inspection No. CW-23).

(2) Lower surface panel No. 1, CWS 178 to 203, L/R (inspection No. CW-24).

(3) Lower surface panels at fairing attach holes, CWS 80.0, L/R (inspection No. CW-25).

(4) Lower rear beam cap, CWS 199 area, L/R (inspection No. CW-26).

(5) Front and rear lower beam cap at CWS 80.5, L/R (inspection No. CW-27).

(6) Lower forward beam cap, CWS 172 outboard, L/R (inspection No. CW-28).

(7) Lower aft panel at footed rib, CWS 62.5, L/R (inspection No. CW-29).

2

(8) Lower doublers between CWS 61.5 and 80, L/R (inspection No. CW-30).

(9) Upper surface panel No. 1 at front beam cap, CWS 220 left to 220 right (inspection No. CW-31).

BY ORDER OF THE SECRETARY OF THE AIR FORCE:

JAMES P. MULLINS, General, USAF
Commander, AFLC

CHARLES A. GABRIEL, General, USAF
Chief of Staff

Prepared by WR-ALC/MMSRAC (AV 468-6345)

3/(4 blank)

DEPARTMENT OF THE AIR FORCE
TECHNICAL ORDER

TO 1C-130-1107
DATA CODE: 0162106
3 SEPTEMBER 1982
Rescission date: 3 June 1983

SAFETY TIME COMPLIANCE TECHNICAL ORDER

INSPECTION OF OUTER WING GENERAL SPANWISE SPLICE AND REAR BEAM CAP AT PANEL ATTACH, FLAP TRACK FITTING AT OWS 162, AND SPAR CAP THICKNESS CHANGE AT OWS 146, C-130 AIRCRAFT

RECEIVED
SEP 10 1982
ENGR'G TECH
DATA FILES

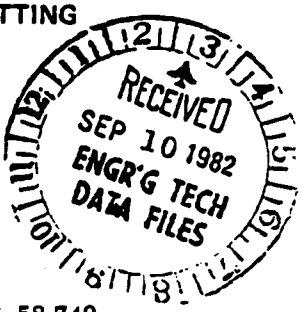

1. APPLICATION.

a. This TCTO is applicable to the following C-130 aircraft:

MODEL	SERIAL NO.
C-130B	58-714, 58-727, 58-729, 58-731, 58-735, 58-736, 58-740 58-746, 58-747, 58-751, 58-754, 58-757 59-1529 60-0294, 60-0295, 60-0296, 60-0299, 60-0300 61-0949, 61-0952, 61-0954, 61-0956, 61-0957, 61-0959 61-0961, 61-0963, 61-0971, 61-2634, 61-2635, 61-2638 61-2639, 61-2640
JC-130B	58-713
C-130E	61-2359, 61-2364, 61-2367, 61-2369, 61-2370, 61-2371 61-2373 62-1784, 62-1786, 62-1789, 62-1792, 62-1793, 62-1794 62-1795, 62-1799, 62-1801, 62-1803, 62-1804, 62-1806 62-1807, 62-1808, 62-1810, 62-1811, 62-1812, 62-1816 62-1817, 62-1819, 62-1820, 62-1821, 62-1822, 62-1823 62-1826, 62-1827, 62-1828, 62-1830, 62-1833, 62-1834 62-1837, 62-1838, 62-1839, 62-1842, 62-1846, 62-1848 62-1849, 62-1850, 62-1851, 62-1856, 62-1858, 62-1859 62-1860, 62-1862, 62-1864, 62-1866 63-7764, 63-7765, 63-7767, 63-7768, 63-7769, 63-7771 63-7777, 63-7779, 63-7781, 63-7782, 63-7784, 63-7786 63-7788, 63-7790, 63-7791, 63-7792, 63-7795, 63-7796 63-7799, 63-7800, 63-7804 through 63-7809, 63-7811 63-7818, 63-7821 through 63-7826 63-7829 through 63-7842, 63-7846, 63-7847 63-7849 through 63-7854, 63-7856 through 63-7860 63-7864, 63-7866, 63-7867, 63-7868, 63-7871, 63-7872 63-7874, 63-7876, 63-7877, 63-7879 through 63-7885

AFLC RAFB, GA

MODEL	SERIAL NO.
C-130E (continued)	63-7887 through 63-7897, 63-7899 63-9810 through 63-9815 64-495 through 64-498, 64-500, 64-501, 64-503, 64-504 64-510, 64-512 through 64-515 64-517 through 64-521, 64-524 through 64-527 64-529 through 64-531, 64-533, 64-535 64-537 through 64-542, 64-544, 64-549, 64-550 64-560, 64-569, 64-570 64-17680, 64-17681, 64-18240
WC-130H	64-14861, 65-984, 65-985
JC-130H	64-14854
WC-130E	61-2365
HC-130P	65-988, 65-991, 65-992, 65-993, 65-994 66-211, 66-217, 66-220, 66-221, 66-223, 66-225
EC-130E	62-1791, 62-1825, 62-1832, 62-1836, 62-1857, 62-1863 63-7773, 63-7783, 63-7815, 63-7816, 63-7828, 63-7869 63-9816, 63-9817
MC-130E	62-1843 63-7785 64-523, 64-551, 64-555, 64-559, 64-561, 64-562 64-565 through 64-568, 64-571, 64-572

b. Kits are not required for compliance with this inspection TCTO.

c. TCTO proofing, as prescribed by TO 00-5-15, was accomplished 2 September 1982 on C-130E aircraft, serial No. 62-1804, at Kanawaha Valley Airport, Charleston WV (130 TAG).

2. PURPOSE.

This TCTO directs inspection of outer wing dry bay general spanwise splice and rear beam caps at panel attach, flap track fitting at OWS 162, and spar cap thickness change at OWS 146, and panel to footed rib attach at OWS 162 and OWS 197. Failure to perform this inspection could result in injury to personnel, damage to property, or unacceptable reductions in operational efficiency. MIP No. WRSAC 82-0282 applies.

3. WHEN TO BE ACCOMPLISHED.

Not later than 30 days after receipt of this TCTO. Failure to accomplish this TCTO by the preceding specified number of days or 60 days prior to the rescission date, whichever occurs first, shall automatically restrict operations or shall be justification for withdrawing the affected system/equipment from service until compliance is accomplished.

4. BY WHOM TO BE ACCOMPLISHED.

Organizational/Intermediate level maintenance.

5. WHAT IS REQUIRED.

a. Supply Information and Requirements. Not applicable.

b. Personnel Information and Requirements.

WORK PHASES	AFSC SKILLS	MAN-HOURS
Defueling/POGO Aircraft	431XX	2.0
Jacking Aircraft/No-Load Engine	431XX	12.0
Gaining Access	431XX	7.0
Cleaning/Depainting	427X1	10.0
Inspection	427X2	16.0
Cleaning/Repainting	427X1	7.0
Closing Up	431XX	1.5
Removal of Aircraft From Jacks	431XX	5.0
Refueling Aircraft	431XX	2.0
	TOTAL	62.5

c. Special Tools and Fixtures Required. Not applicable.

6. HOW WORK IS ACCOMPLISHED.

a. Lower wing flaps in accordance with TO 1C-130B-2-9 instructions.

WARNING

Ensure that all power is isolated from all systems in the inspection area prior to approaching the inspection area. Failure to comply may result in injury to personnel.

b. Remove all hydraulic and electrical power from aircraft in accordance with applicable aircraft maintenance manual instructions.

c. Make aircraft safe for maintenance.

d. Drain fuel from No. 1 and No. 4 tanks in accordance with TO 1C-130B-2-2, jack aircraft to a wing no-load position, cradle No. 1 and No. 4 engines, and jack to a no-load condition in accordance with TO 1C-130A-3 instructions.

e. Remove hydraulic and fuel equipment and tank access doors No. 128 and engine aft nacelle fairings and tailpipes behind No. 1 and No. 4 engines.

NOTE

Dry bay access is gained from top of wing through access opening by use of appropriate support equipment and removal of access doors.

f. Locate general spanwise splice (dry bay area only) from OWS 144 to OWS 214.

WARNING

Verify that area is clear of personnel before making any exposure.

g. Make radiographs of outer wing lower surface panels No. 1 and No. 2 splice and lower surface panels No. 2 and No. 3 splice at OWS 144 to OWS 214 in accordance with technique shown in section IV of TO 1C-130A-36.

h. Direct particular attention for cracks propagating from fastener holes in splice. If crack indications are present, perform back-up or confirmatory inspection in accordance with section IV of TO 1C-130A-36.

NOTE

Film shall be cut to ensure proper fit around panel risers. Do not overlap film.

i. Locate rear beam, lower cap, forward horizontal and vertical flange, OWS 144 to OWS 214. (See figure 1.) (Rear beam lower cap is a machined extrusion fabricated from 7075-T6 aluminum alloy. Beam cap is sulfuric acid anodized and coated with MIL-C-27725 polyurethane for integral fuel tanks.)

NOTE

Fatigue cracks may initiate from fastener holes in forward horizontal and vertical flanges of rear lower beam cap.

j. Perform primary NDI procedure (eddy current) as follows:

(1) NDI equipment:

(a) Crack Detector, Magnaflux ED-520 (or equivalent).

(b) Probe, General Purpose, Steel, Shielded, 1/8-inch diameter, VM Products VM200P (or equivalent).

(c) Probe, General Purpose, Steel, Shielded, 1/8-inch diameter, right angle, VM Products VM202AR (or equivalent).

(d) Calibration Standard, Aluminum, provided with Magnaflux ED-520 (or equivalent).

4

(2) Preparation of part:

(a) Refer to TO 1-1-3 for sealant removal and to TO 1-1-1 for cleaning instructions.

(b) Remove excess sealant, and clean inspection area as required to permit good con between part and probe.

(c) Remove any rough, uneven, or thick paint in accordance with section II of TO 1- prior to inspection.

NOTE

Removal of smooth polyurethane coating is not required.

(3) Instrument settings/calibration: Refer to Instrument Calibration procedure in section of TO 1C-130A-36 for calibration of ED-520 crack detector. (Either eddy current probe listed is acceptable for this inspection.)

(4) Inspection: Scan designated areas.

NOTE

Only an inboard to outboard scan is required on each side of fasteners across dry bay area. A sharp meter deflection, as noted during calibration, will indicate a crack.

k. Locate rear beam, lower cap at aft flange thickness change, OWS 146, L/R. (See figure 2.) (Rear beam lower cap is a machined extrusion fabricated from 7075-T6 aluminum alloy. Aft horizont flange reduces in thickness with 0.15-inch radius from 0.150 to 0.090 inch at approximately OWS 146. Beam cap is sulfuric acid anodized and coated with MIL-C-27725 polyurethane for integral fuel tanks.)

NOTE

Fatigue cracks may initiate in aft edge of cap flange in radius of thickness transition and propagate forward towards vertical flange of cap. On these aircraft with extended heat shields, aft edge of heat shields may be attached through aft cap flange with small rivets. Rivet holes in transition area will provide a good location for fatigue crack initiation, with crack propagating forward towards vertical flange of cap.

l. Perform primary NDI procedure (eddy current) as follows:

(1) NDI equipment:

(a) Crack Detector, Magnaflux ED-520 (or equivalent).

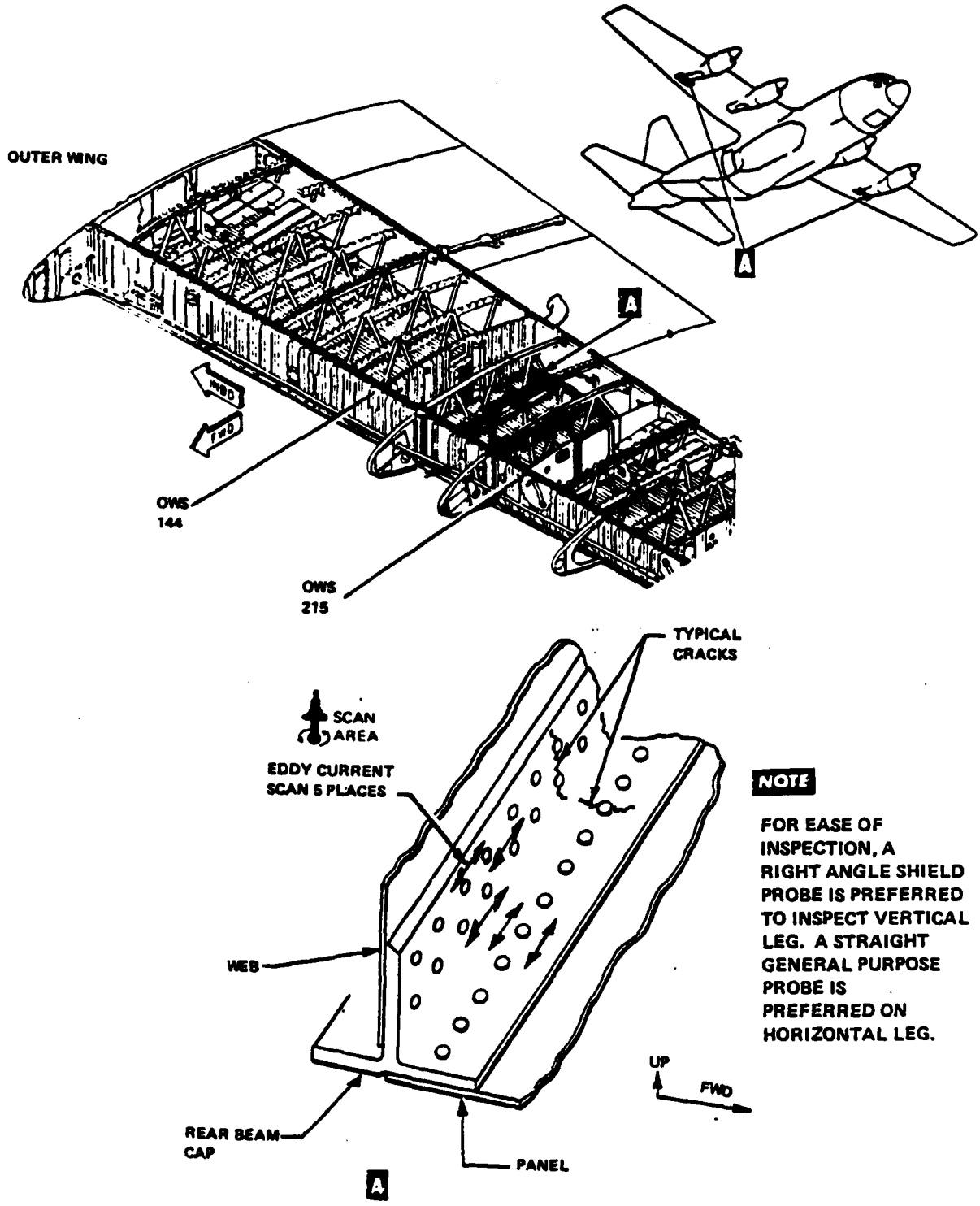

Figure 1. Rear Beam, Lower Cap, Forward Horizontal and Vertical Flange OWS 144 to OWS 215

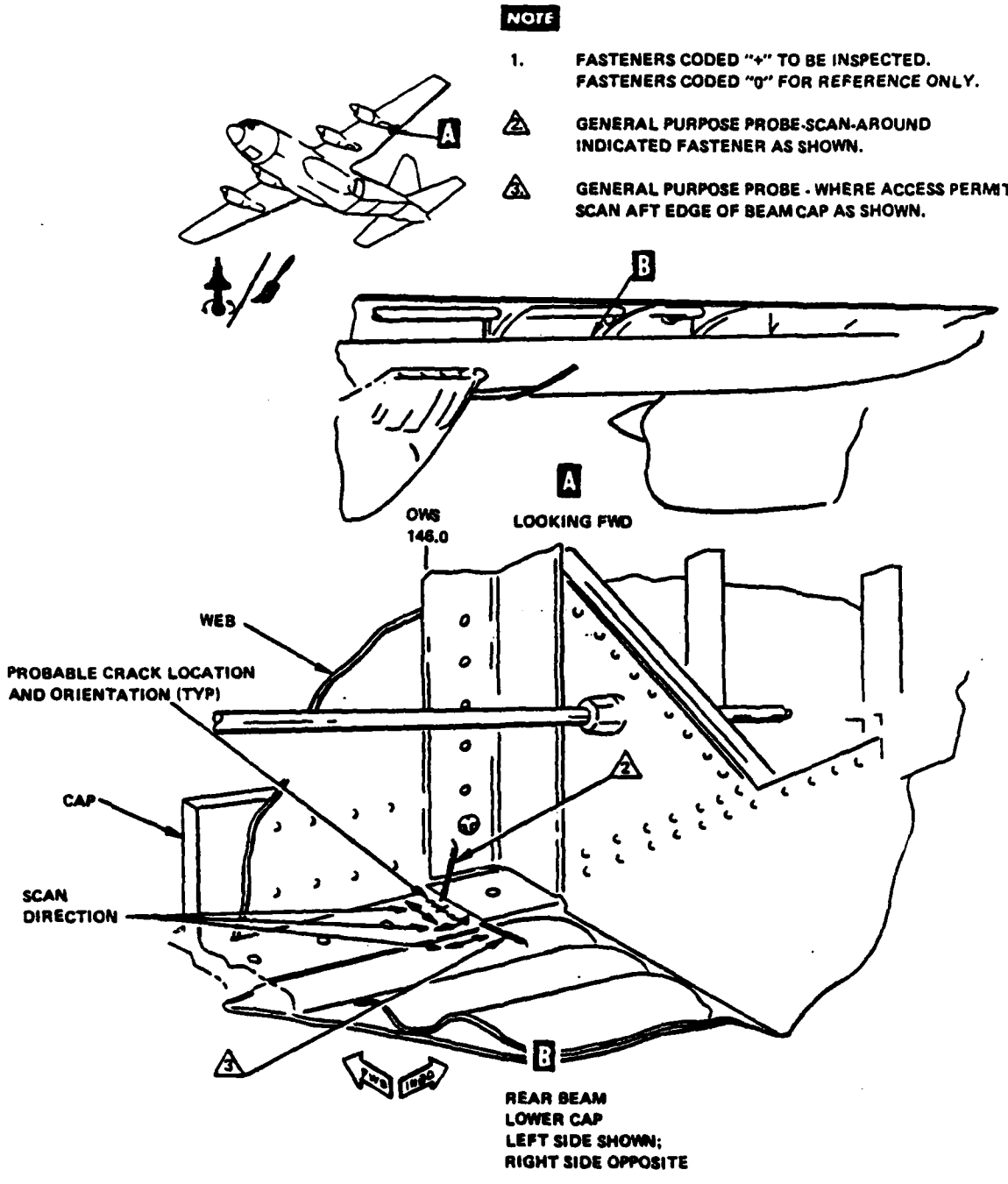

Figure 2. Inspection of Rear Beam Lower Cap at Aft Flange Thickness Change, OWS 146

7

(b) Probe, General Purpose, Right Angle, 1/8-inch diameter, VM Products VM202RA (or equivalent).

(c) Calibration Standard, Aluminum, provided with Magnaflux ED-520 (or equivalent).

(2) Preparation of part:

(a) Refer to TO 1-1-3 for sealant removal and to TO 1-1-1 for cleaning instructions.

(b) Remove excess sealant, and clean inspection area as required to permit good contact between part and probe.

(c) Remove any rough, uneven, or thick paint in accordance with section II of TO 1-1-8 prior to inspection.

NOTE

Removal of smooth MIL-C-27725 polyurethane coating is not required.

(3) Instrument setting/calibration: Refer to Instrument Calibration procedure in section II of TO 1C-130A-36 for calibration of ED-520 crack detector.

(4) Inspection: Scan upper and trailing edge surfaces of rear beam lower cap aft flange in designated area of thickness change.

NOTE

A sharpe meter deflection, as noted during calibration, will indicate a probable crack.

m. Locate outer wing lower surface panels, fastener holes common to footed ribs, engine drag fittings, and nacelle attach angles, OWS 162 and 197, L/R. (See figure 3.) (Lower surface panels and footed ribs are fabricated from 7075-T6 aluminum extrusions. Footed ribs are attached to lower surface panels with steel fasteners which have been countersunk into skin panel exterior surface. Panels and footed ribs have been sulfuric acid anodized and overcoated with various finish systems on outside surfaces. Panels are covered by engine drag fittings and nacelle attach angles in some areas. Some fasteners in footed ribs are covered (hidden) by nacelle attach angle as shown in figure 3. These fasteners are in line with fasteners on other side of nacelle attach angle.)

NOTE

- Fatigue cracks may occur in lower surface panels at footed rib attachments. Cracks will initiate at fastener holes in lower surface panels common to footed ribs and propagate in an approximate chordwise direction.

- This inspection has two primary inspection procedures and one backup procedure. Primary procedure No. 1 is ultrasonic for cracks in panels under engine drag fittings and nacelle attach angles. Primary procedure No. 2 is eddy current for cracks in panels where fasteners are exposed to the surface of the panel. The backup procedure is a bolt hole eddy current method.

8

NOTE

For ease in locating scope presentation of fasteners through drag angle, use grease pencil to mark a line perpendicular to fasteners hidden beneath drag angle.

n. Perform primary NDI procedure No. 1 (ultrasonic) as follows:

(1) NDI equipment:

(a) Ultrasonic Flaw Detector, NSN 6635-00-242-1501 (or equivalent).

(b) Transducer, 5 MHz, 0.25 by 0.25, 70 degrees, Shear Wave, Automation Industries 57A3054 (or equivalent).

(c) Cable, 6-Foot, Microdot/BNC, Automation Industries 57A2271 (or equivalent).

(d) Couplant, Light Oil or Light Grease.

(2) Preparation of part:

(a) Refer to TO 1-1-3 for sealant removal and to TO 1-1-1 for cleaning instructions.

(b) Remove excess sealant from surface and clean local inspection area as required to permit good contact between part and transducer.

NOTE

Paint removal, in accordance with section II of TO 1-1-8, may be required in area where paint is rough, loose, or uneven.

(c) Remove all paint around fasteners inspected by eddy current procedure.

(3) Instrument settings/calibration:

(a) Apply couplant and couple shear wave transducer to lower surface of wing panel. Place as in transducer position No. 1, with transducer pointing toward fastener.

(b) Calibrate instrument to display initial pulse near left side of CRT display and adjust instrument to display signal from fastener hole near center of CRT display with BR from hole at 100% of CRT display. Add 10DB gain.

(c) Move transducer to position No. 2 with transducer between fasteners. No back reflection on scope indicates a good area.

9

(4) Inspection:

(a) Apply couplant to panel on inboard and outboard sides of each engine drag fitting and nacelle attach angle.

(b) Couple the transducer and locate each visible fastener and scan up to edge of fitting. CRT should be as shown in positions 1, 4, or 7.

(c) Move transducer between fasteners and rotate approximately five degrees in each direction. A CRT similar to positions No. 2, 5, or 8 is a good area. A CRT similar to positions 3, 6, or 9 indicates a crack.

(5) Mark indicated defects.

(6) To confirm defect conditions, use Backup NDI Procedure.

(7) Proceed to Primary Inspection Procedure No. 2.

o. Perform primary NDI procedure No. 2 (eddy current) as follows:

(1) NDI equipment:

(a) Crack Detector, Magnaflux ED-520 (or equivalent).

(b) Probe, General Purpose, Steel, Shielded, 1/8 inch diameter, VM Products VM200 (or equivalent).

(c) Calibration Standard, Aluminum, provided with Magnaflux ED-520 (or equivalent).

(2) Preparation of parts:

(a) Clean area and remove excess sealant around fastener heads to permit good contact between part and probe.

(b) If there is excessive roughness or looseness of paint, remove paint around fastener heads.

(3) Instrument settings/calibration: Refer to Instrument Calibration procedure in section II of TO 1C-130A-36 for calibration of ED-520 crack detector.

(4) Inspection: Scan panel surface in an area of 1/2 inch around each fastener head common to panel and footed rib. A sharp meter deflection, as noted during calibration, will indicate a probable crack in the panel.

(5) Mark and report indicated defects.

p. Perform back-up NDI procedure (eddy current) as follows:

(1) NDI equipment:

(a) Crack Detector, Magnaflux ED-520 (or equivalent).

(b) Probe, Bolt Hole, 3/16-inch diameter, Ideal Specialties 6200-3/16-BH-BNC (or equivalent).

(c) Calibration Standard, Aluminum, provided with Magnaflux ED-520 (or equivalent

(2) Access: Same as for Primary NDI Procedure No. 1.

(3) Preparation of part:

CAUTION

Do not remove more than four fasteners at one time. Install new fasteners prior to operating engines. Use extreme care to ensure correct installation of new fasteners. Contact WR-ALC/MMSRA for disposition of aircraft with crack(s) in panel under drag angle.

(a) Remove fastener(s) from suspected defective fastener hole(s) in accordance with TO 1C-130A-3 instructions.

(b) Refer to TO 1-1-3 for sealant removal and to TO 1-1-1 for cleaning instructions. Clean inside surface of suspected defective fastener hole(s) as required to permit good contact between part and probe.

(4) Instrument settings/calibration: Refer to Instrument Calibration procedure in section II of TO 1C-130A-36 for calibration of ED-520 crack detector.

NOTE

Eddy current instrument must be recalibrated when inspection probes are changed.

(5) Inspection: Scan inner surface of suspected defective fastener hole(s) in all layers of material. For bolt hole inspection, refer to Eddy Current Scanning Techniques procedure in section II of TO 1C-130A-36. A sharp metal deflection, as noted during calibration, will indicate a probable crack in the part.

11

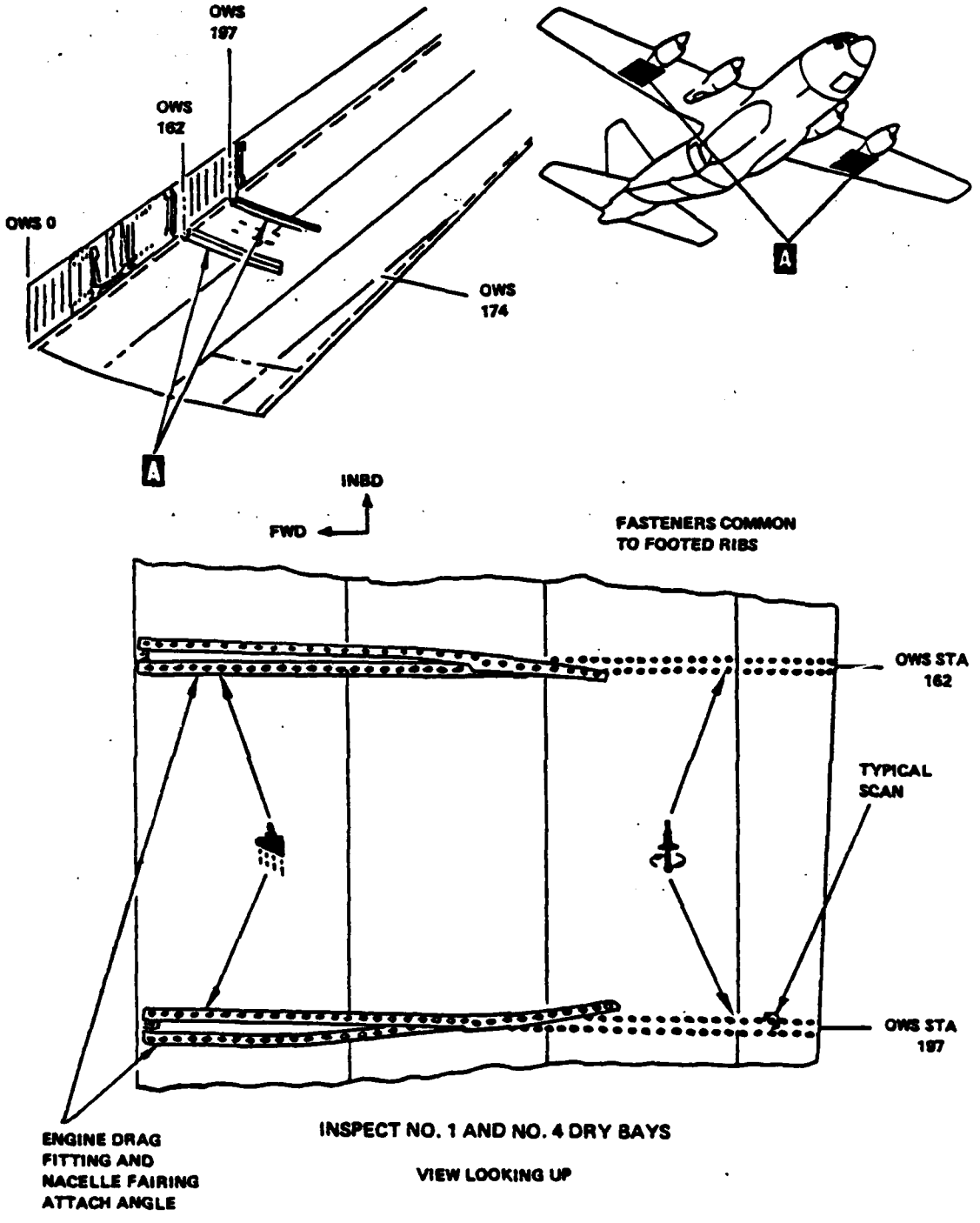

Figure 3. Outer Wing Lower Surface Panels, Fastener Holes Common to Footed Ribs, Engine Drag Fitting and Nacelle Attach Angle, OWS 162 and OWS 197 (Sheet 1 of 2)

12

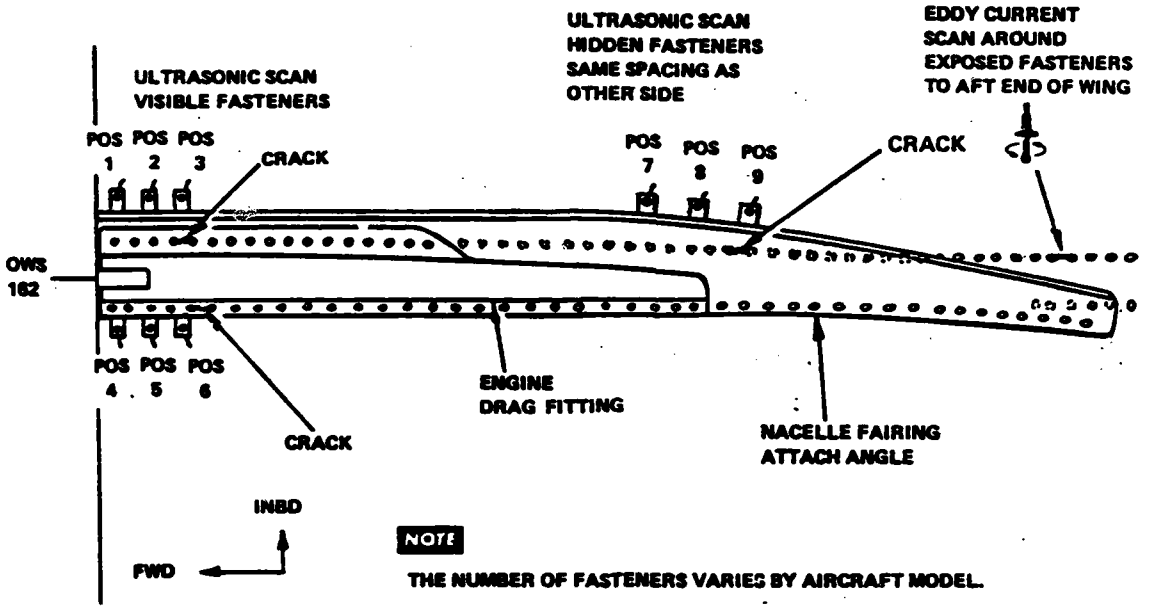

TYPICAL INSPECTION

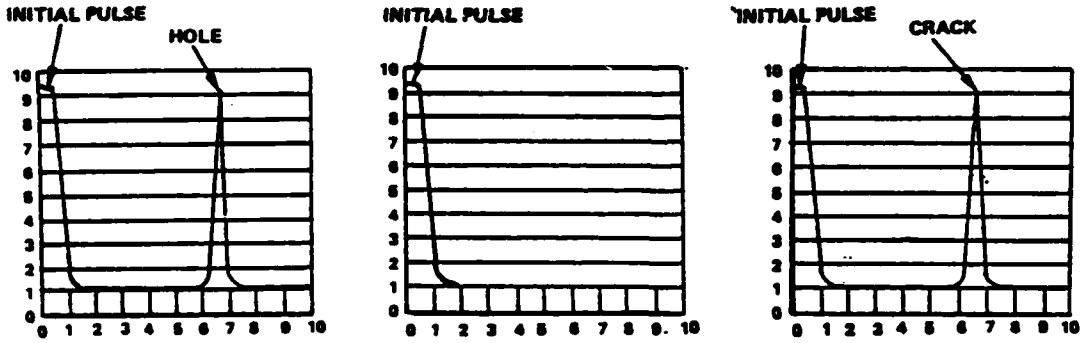

CRT PRESENTATION
LOCATION NO. 1, 4, 7
FASTENER HOLE

CRT PRESENTATION
LOCATION NO. 2, 5, 8
BETWEEN FASTENERS
GOOD AREA

CRT PRESENTATION
LOCATION NO. 3, 6, 9
BETWEEN FASTENERS
CRACKED PANEL

TYPICAL CRT PRESENTATIONS

Figure 3. Outer Wing Lower Surface Panels, Fastener Holes Common to Footed Ribs, Engine Drag Fitting and Nacelle Attach Angle, OWS 162 and OWS 197 (Sheet 2 of 2)

q. Locate rear beam, lower cap, forward horizontal and vertical flange, and rear web at flap track and rib attach point, OWS 162 L/R. (See figure 4.) (Rear beam lower cap is a machined extrusion fabricated from 7075-T6 aluminum alloy. Beam cap is sulfuric acid anodized and coated with MIL-C-27725 polyurethane for integral fuel tanks.)

NOTE

Fatigue cracks may initiate from fastener holes in forward horizontal and vertical flanges of rear lower beam cap and web at flap track.

r. Perform primary NDI procedure (eddy current) as follows:

(1) NDI equipment:

(a) Crack Detector, Magnaflux ED-520 (or equivalent).

(b) Probe, General Purpose, Shielded, 1/8-inch diameter, VM Products VM200 (or equivalent).

(c) Probe, General Purpose, Shielded, 1/8-inch diameter, right angle, VM Products VM202RA (or equivalent).

(d) Calibration Standard, Aluminum, provided with Magnaflux ED-520 (or equivalent).

(2) Preparation of airplane: Remove hydraulic and fuel equipment and tank access doors No. 128 behind No. 1 and No. 4 engines.

(3) Access: Gain access from top of wing by use of appropriate support equipment and by removal of access doors.

(4) Preparation of part:

(a) At OWS 162, remove 343301 lower aft rear rib brace attach fitting and two 343325 and 345114 aft vertical braces.

(b) Refer to TO 1-1-3 for sealant removal and to TO 1-1-1 for cleaning instructions.

(c) Remove excess sealant, and clean inspection area, as required, to permit good contact between part and probe.

(d) Remove thick, uneven, loose, or rough paint in accordance with TO 1-1-8 instructions.

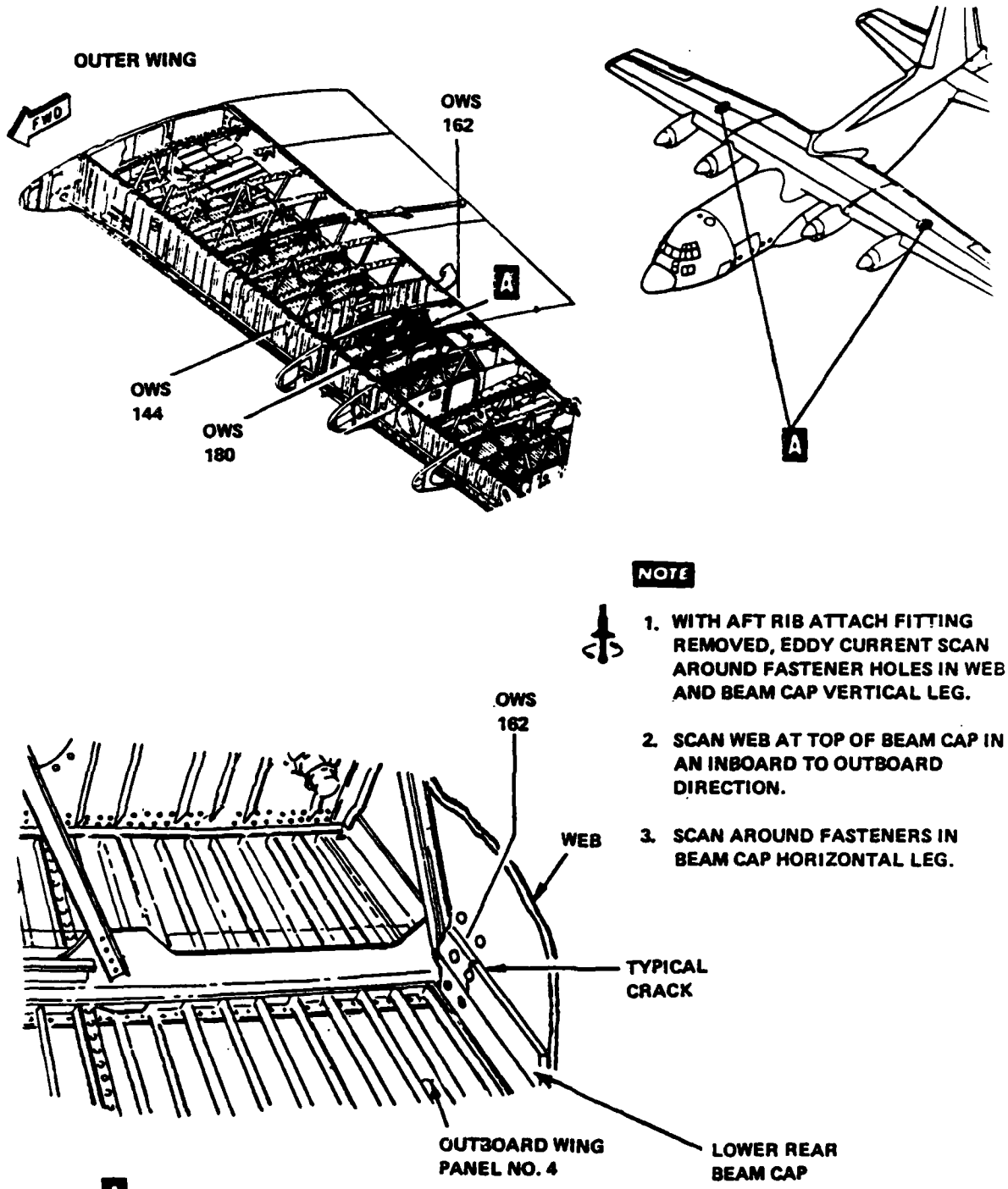

Figure 4. Inspection of Outer Wing Lower Rear Beam Cap and Rear Web at Flap Track and Rib Attach Point, OWS 162 L/R

15

(5) Instrument settings/calibration: Refer to Instrument Calibration procedure in section II of TO 1C-130A-36 to calibrate ED-520 crack detector.

NOTE

Either eddy current probe listed is acceptable for this inspection.

(6) Inspection:

(a) Scan around fastener holes in vertical segment of beam cap and web.

(b) Scan web at top of beam cap in an inboard to outboard direction.

(c) Scan around fasteners in beam cap horizontal web.

(7) Mark and report indicated defects.

(8) If crack is detected, rework/repair in accordance with TO 1C-130A-3 (Typical Wing Panel Repair).

NOTE

Any cracks exceeding repair limitations contained in TO 1C-130A-3 require WR-ALC/MMSRA disposition.

s. System Securing: Clean areas inspected, restore finishes, reinstall removed components, and reinstall MS20006 fasteners in flap track fitting in accordance with applicable aircraft maintenance manual instructions.

t. Return aircraft to normal service.

u. Report findings, either positive or negative, after compliance, citing aircraft serial number, aircraft flying hours, outer wing serial number(s), number of defects, and description of defects (crack length, orientation and OWS) to WR-ALC/MMSRAA/MMSF.

7. SUPPLEMENTAL INFORMATION.

a. Defuel/Purge. Not applicable.

b. Operational Checkout Requirements.

The aircraft shall not require an operational checkout after TCTO compliance and prior to release for normal operations.

c. Weight and Balance Information.

There are no weight or balance changes resulting from the instructions contained herein.

d. Technical Manuals Affected. Not applicable.

8. RECORDS.

a. Action Required on Maintenance Records.

(1) An AFTO Form 349 will be submitted for each affected C-130 aircraft by serial numb and model. Comply with instructions prescribed by TO 00-20-2-2, paragraph 2-2.

(2) This TCTO does affect operational performance for recording in Block H of AFTO Form 781K.

b. Action Required on Supply Records.

Supply records are not affected by this TCTO.

c. Modification Identification Marking. Not applicable.

BY ORDER OF THE SECRETARY OF THE AIR FORC

JAMES P. MULLINS, General, USAF
Commander, AFLC

CHARLES A. GABRIEL, General, USAF
Chief of Staff

Prepared by WR-ALC/MMSRBA (AV 468-6345)

17/(18 blan

DEPARTMENT OF THE AIR FORCE
TECHNICAL ORDER

TO 1C-130-1113C
DATA CODE: 0162605
15 NOVEMBER 1982

★ SUPPLEMENT TO BASIC TECHNICAL ORDER ★

C-4

INSPECTION OF LOWER SURFACE BEAM CAPS AND PANELS, INSIDE FUEL TANKS, OWS 0 TO 144 AND OWS 212 TO 360, C-130 AIRCRAFT

NOTE

This TCTO supplements TO 1C-130-1113, data code 0162552, dated 1 November 1982, to make corrections as indicated herein. No additional work is required by this supplement. A SUITABLE REFERENCE TO THIS SUPPLEMENT WILL BE MADE ON PAGE 1 AND OPPOSITE EACH AFFECTED PARAGRAPH IN THE BASIC PUBLICATION.

Paragraph 6i. of the basic TCTO is amended in its entirety to read as follows:

i. Remove components specified in TO 1C-130A-36 inspection procedure and accomplish the following inspections:

NOTE

- For OWS 18 through 544, fuel cell and dry bay area, refer to and comply with Safety Precautions, TO 1C-130A-36 (section I) and TO 33B-1-1 when performing eddy current inspections.
- Inspection numbers referenced herein are identified in Inspection Index Table, section IV of TO 1C-130A-36.

(1) General spanwise splices, OWS 6 to 144, 212 to 360 L/R (inspection numbers OW-15 and OW-16, except to use film type AA, 3.50 by 17 inches).

(2) Front and rear beam lower caps and panels from OWS 16 to 144, 212 to 360 L/R (inspection No. OW-37).

(3) Front beam lower cap, panel No. 1, web and corner fitting at OWS 15.7, L/R (inspection No. OW-38).

(4) Front beam lower cap and web at pylon fitting. OWS 70 and 92. L/R (inspection No. OW~~-39~~

AFLC RAFB, GA

(5) Front beam lower cap, web, and tiedown fitting, OWS 335 or OWS 369, L/R (inspection No. OW-40).

(6) Lower surface panel risers at rib cap-to-panel attachments, OWS 180, 249, 266, 283, 300, 317, 335 and 352, L/R (inspection No. OW-41).

(7) Lower surface panel No. 4 risers at fuel boost pump attachments, OWS 11 and 220 (inspection No. OW-42).

(8) Lower surface panels No. 3 and No. 4 and rear beam lower cap at panel No. 4 runout, OWS 287.3, L/R (inspection No. OW-43).

NOTE

If pylon fitting bolts at OWS 72 and 90 cannot be removed because of interference with risers, cut off bolt heads for removal and install new bolts in opposite direction.

(9) Rear beam cap, rib cap attach fitting, web, stiffener, reinforcing angle and pylon fitting, OWS 72 and 90, L/R (inspection No. OW-44).

(10) Rear beam lower cap at flap track rib, OWS 293, L/R (inspection No. OW-45).

(11) Outer wing lower front beam cap at termination of pylon reinforcing beam, OWS 303 and 350, L/R (inspection No. OW-49) (HC-130P aircraft only).

BY ORDER OF THE SECRETARY OF THE AIR FORCE:

JAMES P. MULLINS, General, USAF
Commander, AFLC

CHARLES A. GABRIEL, General, USAF
Chief of Staff

Prepared by WR-ALC/MMSRAC (AV 468-6345)

2

DEPARTMENT OF THE AIR FORCE
TECHNICAL ORDER

TO 1C-130-1113D
DATA CODE: 0162993
31 JANUARY 1983

★ SUPPLEMENT TO BASIC TECHNICAL ORDER ★

INSPECTION OF LOWER SURFACE BEAM CAPS AND PANELS, INSIDE FUEL TANKS, OWS 0 TO 144 AND OWS 212 TO 360, C-130 AIRCRAFT

C, 4

NOTE

This TCTO supplements TO 1C-130-1113, data code 0162552, dated 1 November 1982, to make corrections as indicated herein. No additional work is required by this supplement. A SUITABLE REFERENCE TO THIS SUPPLEMENT WILL BE MADE ON PAGE 1 AND OPPOSITE EACH AFFECTED PARAGRAPH IN THE BASIC PUBLICATION.

Paragraph 6 of the basic TCTO is amended to delete the NOTE after step e. and to change steps e. and f., in their entirety, to read as follows:

e. Remove foam in accordance with TO 1C-130B-2-5, section XIII, or TO 1C-130(H)H-2-6, section IX, as applicable.

f. Dry, package, and store foam in accordance with TO 1C-130B-2-5, section XIII, or TO 1C-130(H)H-2-6, section IX, as applicable.

BY ORDER OF THE SECRETARY OF THE AIR FORCE

JAMES P. MULLINS, General, USAF
Commander, AFLC

CHARLES A. GABRIEL, General, USAF
Chief of Staff

Prepared by WR-ALC/MMSRAC (AV 468-6345)

AFLC SAFB, GA

1/(2 blank

LCO/774/920 C-4

[illegible] 83 JAN 6 23 [illegible] 20

[illegible]

[illegible]
[illegible]
[illegible]

SAFETY TIME COMPLIANCE TECHNICAL ORDER

INSPECTION OF LOWER SURFACE BEAM CAPS AND PANELS, INSIDE FUEL TANKS, OWS 0 TO 144 AND OWS 212 TO 360, C-130 AIRCRAFT

C, L.

1. APPLICATION.

a. This TCTO is applicable to the following C-130 aircraft:

MODEL	SERIAL NO.
C-130B	58-714, 58-727, 58-731, 58-735, 58-736, 58-740, 58-746 58-747, 58-751, 58-754, 58-757 59-1529 60-0294, 60-0296, 60-0299, 60-0300 61,0949, 61-0952, 61-0954, 61-0956, 61-0957, 61-0959 61-0961, 61-0963, 61-0971, 61-2634, 61-2635, 61-2638 61-2639, 61-2640
JC-130B	58-713
C-130E	61-2359, 61-2364, 61-2367, 61-2369, 61-2370, 61-2371 61-2373 62-1784, 62-1786, 62-1789, 62-1792, 62-1793, 62-1794 62-1795, 62-1799, 62-1801, 62-1803, 62-1804, 62-1806 62-1807, 62-1808, 62-1810, 62-1811, 62-1812, 62-1816 62-1817, 62-1819, 62-1820, 62-1821, 62-1822, 62-1823 62-1826, 62-1827, 62-1828, 62-1830, 62-1833, 62-1834 62-1837, 62-1838, 62-1839, 62-1842, 62-1846, 62-1848 62-1849, 62-1850, 62-1851, 62-1856, 62-1858, 62-1859 62-1860, 62-1862, 62-1864, 62-1866 63-7764, 63-7765, 63-7767, 63-7768, 63-7769, 63-7771 63-7777, 63-7779, 63-7781, 63-7782, 63-7784, 63-7786 63-7788, 63-7790, 63-7791, 63-7792, 63-7795, 63-7796 63-7799, 63-7800, 63-7804 through 63-7809, 63-7811 63-7818, 63-7821 through 63-7826 63-7829 through 63-7842, 63-7846, 63-7847 63-7849 through 63-7854, 63-7856 through 63-7860 63-7864, 63-7866, 63-7867, 63-7868, 63-7871, 63-7872 63-7874, 63-7876, 63-7877, 63-7879 through 63-7885 63-7887 through 63-7897, 63-7899 63-9810 through 63-9815 64-495 through 64-498, 64-500, 64-501, 64-503, 64-504 64-510, 64-512 through 64-515 64-518 through 64-521, 64-524 through 64-527



i

MODEL	SERIAL NO.
C-130E (cont)	64-529 through 64-531, 64-533, 64-535 64-537 through 64-542, 64-544, 64-549, 64-550 64-560, 64-569, 54-570 64-17680, 64-17681, 64-18240
WC-130H	64-14861 65-984, 65-985
JC-130H	64-14854
WC-130E	61-2365
HC-130P	65-988, 65-991, 65-992, 65-993, 65-994 66-211, 66-217, 66-220, 66-221, 66-223, 66-225
EC-130E	62-1791, 62-1825, 62-1832, 62-1836, 62-1857, 62-1863 63-7773, 63-7783, 63-7815, 63-7816, 63-7828, 63-7869 63-9816, 63-9817
MC-130E	62-1843 63-7785 64-523, 64-551, 64-555, 64-559, 64-561, 64-562 64-565 through 64-568, 64-571, 64-572

b. Kits are not required for compliance with this inspection TCTO.

c. TCTO proofing, as prescribed by TO 00-5-15, was accomplished 15 October 1982 by WR-ALC on C-130E aircraft, serial No. 62-1786.

2. PURPOSE.

This TCTO directs inspection of outer wing lower surface areas in fuel tanks as follows: general spanwise splices, OWS 6 to 144, 212 to 360 L/R; front and rear beam lower caps and panels from OWS 16 to 144, 212 to 360 L/R; front beam lower cap, panel No. 1, web and corner fitting at OWS 15.7, L/R; front beam lower cap and web at pylon fitting, OWS 70 and 92, L/R; front beam lower cap, web, and tie-down fitting, OWS 33S, L/R; lower surface panel risers at rib cap-to-panel attachments, OWS 180, 249, 266, 283, 300, 317, 335 and 352, L/R; lower surface panel No. 4 risers at fuel boost pump attachments, OWS 11 and 220; lower surface panels No. 3 and 4 and rear beam lower cap at panel No. 4 runout, OWS 287.3, L/R; rear beam cap, rib cap attach fitting, web, stiffener, reinforcing angle and pylon fitting, OWS 72 and 90, L/R; and rear beam lower cap at flap track rib, OWS 293, L/R. MIP no. WRSAC 82-0317 applies.

3. WHEN TO BE ACCOMPLISHED.

During depot level maintenance (as scheduled by WR-ALC/MMSP).

4. BY WHOM TO BE ACCOMPLISHED.

Depot level maintenance.

5. WHAT IS REQUIRED.

a. Supply Information and Requirements.

2

(1) KITS/PARTS/MATERIALS REQUIRED.

The following parts/materials required to comply with this TCTO are not furnished in a kit but will be furnished by depot/contract teams accomplishing this TCTO.

QTY	STOCK NO.	PART NO.	NOMENCLATURE	SOURCE
*	8030-00-584-4399	MIL-S-8784	Sealing Compound Class A2	AF Supply
	or	or	or	
*	8030-00-598-2910	MIL-S-8784	Sealing Compound Class B1/2	AF Supply
		SEALS FOR C-130B/E SERIES AIRCRAFT		
2	5330-00-624-9353LG	373326-1	Seal	AF Supply
2	5330-00-624-9352LG	373326-2	Seal	AF Supply
2	5330-00-624-9346LG	373326-3	Seal	AF Supply
2	5330-00-624-9345LG	373326-4	Seal	AF Supply
2	5330-00-585-7996LG	373326-10	Gasket	AF Supply
2	5330-00-650-5943LG	373326-12	Seal	AF Supply
		NOTE		
		The following screws are applicable to all series C-130/E aircraft, top wing access panels.		
**	5305-00-551-6732	NAS585-8	Screw	AF Supply
**	5305-00-551-6733	NAS585-9	Screw	AF Supply
**	5305-00-551-6734	NAS585-10	Screw	AF Supply
**	5305-00-551-8152	NAS585-11	Screw	AF Supply
**	5305-00-551-8151	NAS585-12	Screw	AF Supply
		NOTE		
		The following screw is applicable for outboard dry bay panels, C-130B/E series aircraft.		
**	5305-00-551-6731	NAS585-6	Screw	AF Supply
		NOTE		
		The following screws are applicable for center wing access panels, C-130E series aircraft.		
**	5305-00-639-7248	NAS583-12	Screw	AF Supply

* Exact quantity determined at time of inspection/rework. Listed items are 1/2-pint kits (estimated five kits required for each aircraft).

** Exact quantity determined at time of inspection/rework.

(2) ACTION REQUIRED ON ITEMS IN STOCK. Not applicable.

(3) KITS/PARTS/MATERIALS REQUIRED TO MODIFY ITEMS IN STOCK. Not applicable.

(4) DISPOSITION OF REMOVED AND REPLACED PARTS/MATERIAL.

NOTE

Parts/materials removed, but not listed herein, will be disposed of as scrap material/shop residue.

(5) DRAWINGS/INSTRUCTIONS REQUIRED. Not applicable.

(6) SIZE, WEIGHT, AND COST OF KITS. Not applicable.

(7) DISPOSITION OF KITS. Not applicable.

b. Personnel Information and Requirements.

WORK PHASES	AFSC SKILLS	MAN-HOURS
Defueling	Aircraft Maintenance Specialist (43151)	40.0
Jacking and Mooring Aircraft	Aircraft Maintenance Specialist (43151)	12.0
Gaining Access	Aircraft Maintenance Specialist (43151)	100.0
Purging/Depuddling	Aircraft Fuel System Specialist (423X3)	30.0
*Removal and Storage of Foam (If Applicable)	Aircraft Fuel System Specialist (423X3)	650.0
Inspection	NDI Technician (42772)	175.0
*Reinstallation of Foam (If Applicable)	Aircraft Fuel System Specialist (423X3)	650.0
Reassembly	Aircraft Maintenance Specialist (43151)	100.0
Removal of Mooring and Jacks	Aircraft Maintenance Specialist (43151)	15.0
Leak Check	Aircraft Fuel System Specialist (423X3)	130.0
Refueling	Aircraft Maintenance Specialist (43151)	10.0
	TOTAL	1912.0

* For aircraft with explosion suppressant foam installed.

c. Special Tools and Fixtures Required. Not applicable.

6. HOW WORK IS ACCOMPLISHED.

a. Make aircraft safe for maintenance and/or inspection in accordance with TO 1-1-3, section IV.

b. Defuel aircraft in accordance with TO 1C-130B-2-1, TO 1C-130B-2-2, TO 1C-130(H)H-2-1, or TO 1C-130(H)H-2-6, as applicable.

CAUTION

If aircraft is to be worked on a ramp, out in the open, it must be moored in accordance with TO 1C-130B-2-2 or TO 1C-130(H)H-2-1, as applicable.

c. Support aircraft on nose and wing jacks in accordance with TO 1C-130A-3 ("Jacking Instructions - Wing Repairs, Outer Wing Installed on Aircraft") and TO 1C-130B-2-2, or TO 1C-130(H)H-2-1, as applicable.

WARNING

When sections of foam are to be removed to gain access for tank/component maintenance, use air purging methods described in TO 1-1-3. As foam components are removed, air purging must continue throughout the operation to preclude build-up of combustible vapors. A fire safe level of five percent lower explosion limit (LEL) or below must be maintained during all tank maintenance.

CAUTION

Use special care to protect foam material from contamination. Small particles will adhere to wet surfaces and later wash into the fuel. Place removed foam in clean, dustproof, preferably static conductive containers as specified in TO 1-1-3 upon removal from tanks.

NOTE

For those aircraft which have explosive suppressant foam installed, it may be easier to handle the foam by removing it from individual cells one at a time, completing NDI inspection/maintenance on rib diagonals, and then reinstalling the foam.

d. Purge fuel tanks in accordance with TO 1-1-3, section IV ("Air Purge Procedures (Blow and Exhaust)").

e. Remove foam in accordance with TO 1-1-3, section IV ("Foam Removal Procedures") and store foam in accordance with TO 1-1-3, section IV ("Storage of Foam").

NOTE

The blue foam has low tear strength when wetted with fuel. Care shall be exercised in removing components to avoid tearing or destroying individual components.

f. Dry, package, and store removed tank foam in accordance with TO 1-1-3 until it is reinstalled. (For duration required to complete in-tank maintenance, packaged foam components may be stored in fuel cell maintenance facility, provided that approval of fire marshall and ground safety office is obtained.)

WARNING

Before starting depuddling operation, check fuel tanks for a fire safe condition of five percent or lower of the lower explosion level (LEL). Air purge until an LEL of five percent or lower is obtained. Failure to do so may result in health and fire hazards.

g. Depuddle aircraft in accordance with TO 1-1-3, section IV ("Depuddling Procedures").

h. For inspection equipment required, see TO 1C-130A-36 inspection procedure.

i. Remove components specified in TO 1C-130A-36 inspection procedure and accomplish the following inspections:

NOTE

For OWS 18 through 544, fuel cell and dry bay area, refer to and comply with Safety Precautions, TO 1C-130A-36 (section I) and TO 33B-1-1 when performing eddy current inspections.

(1) General spanwise splices, OWS 6 to 144, 212 to 360 L/R.

(2) Front and rear beam lower caps and panels from OWS 16 to 144, 212 to 360 L/R.

(3) Front beam lower cap, panel No. 1, web and corner fitting at OWS 15.7, L/R.

(4) Front beam lower cap and web at pylon fitting, OWS 70 and 92, L/R.

(5) Front beam lower cap, web, and tiedown fitting, OWS 33S, L/R.

(6) Lower surface panel risers at rib cap-to-panel attachments, OWS 180, 249, 266, 283, 300, 317, 335 and 352, L/R.

(7) Lower surface panel No. 4 risers at fuel boost pump attachments, OWS 11 and 220.

(8) Lower surface panels No. 3 and 4 and rear beam lower cap at panel No. 4 runout, OWS 287.3, L/R.

(9) Rear beam cap, rib cap attach fitting, web, stiffener, reinforcing angle and pylon fitting, OWS 72 and 90, L/R.

(10) Rear beam lower cap at flap track rib, OWS 293, L/R.

j. Repair defects in accordance with TO 1C-130A-3. If repair is not listed in TO 1C-130A-3, contact WR-ALC/MMSRAA for instructions.

k. At completion of inspection and/or repair of defective components, install foam, if applicable, and close up that area.

l. Install fuel cell access panels in dry bays in accordance with TO 1C-130A-23, section II ("Sealing Procedures"), using MIL-S-8784 sealant/seals as applicable.

6

AD-A139 484 NONDESTRUCTIVE EVALUATION TECHNOLOGY WORKING GROUP REPORT (IDA/OSD R&M (I.. (U) INSTITUTE FOR DEFENSE ANALYSES ALEXANDRIA VA SCIENCE AND TECH.. G MAYER

3/5

UNCLASSIFIED AUG 83 IDA-D-37 IDA/HQ-83-25921 F/G 14/2 NL

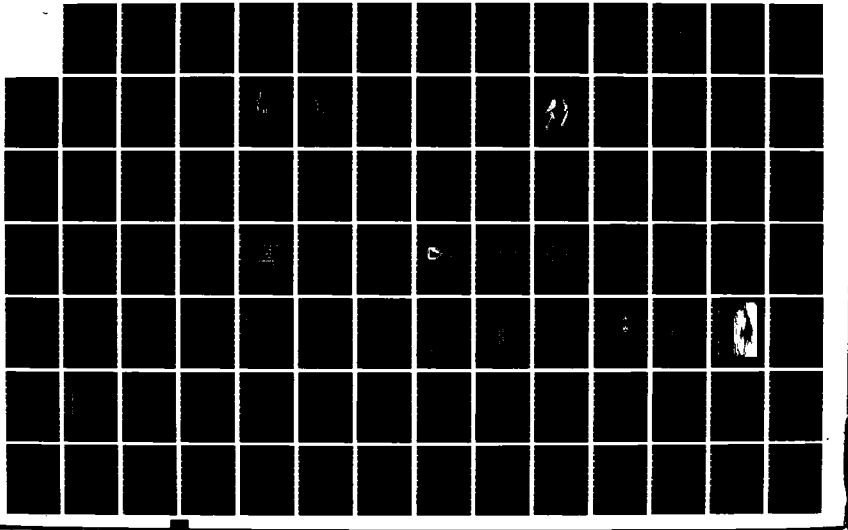

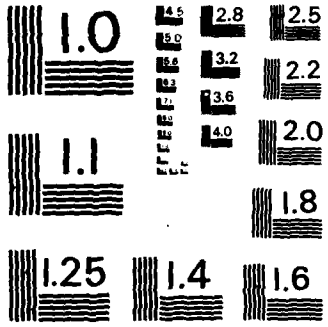

MICROCOPY RESOLUTION TEST CHART
NATIONAL BUREAU OF STANDARDS-1963-A

m. For access panels on top of wing to No. 1 and No. 4 fuel cells, install new seals. Torque fasten in accordance with TO 1C-130B-2-5, section I ("Torque Values for Fuel System Access Panels").

n. After completion of close-up of both wings or areas affected, perform a leak check in accorda with TO 1C-130B-2-5 or TO 1C-130(H)H-2-6, as applicable.

o. Return aircraft to normal service if no leaks are found or when leaks are repaired.

p. Report results of this inspection by priority message to WR-ALC/MMSRAA/MMSP/MMSF as follows: aircraft MDS, aircraft serial number, wing serial number, aircraft hours, and location of defects. include the following information: left/right wing, OWS, crack location, and defect orientation.

q. Submit a negative report if no defects are found.

7. SUPPLEMENTAL INFORMATION.

a. Defuel/Purge.

Defueling/purging of the aircraft shall be accomplished prior to accomplishing this TCTO (see paragraph 6).

b. Operational Checkout Requirements.

The system/equipment shall not require an operational checkout after TCTO compliance and prior to release for normal operations.

c. Weight and Balance Information.

There are no weight or balance changes resulting from the instructions contained herein.

d. Technical Orders Affected.

TO NO.	DATE OF BASIC ISSUE
1C-130A-36	15 July 1971

8. RECORDS.

a. Action Required on Maintenance Records.

(1) An AFTO Form 349 will be submitted for each applicable C-130 aircraft by serial numbe Report TCTO compliance in accordance with TO 00-20-2-2.

(2) An entry is required on AFTO Form 95 (Basic Aircraft).

(3) This TCTO does not affect operational performance, limitations, or procedures for record ing in block H of AFTO Form 781K.

b. Action Required on Supply Records.

Supply records are not affected by this TCTO.

c. Modification Identification Marking. Not applicable.

BY ORDER OF THE SECRETARY OF THE AIR FORCE:

JAMES P. MULLINS, General, USAF
Commander, AFLC

CHARLES A. GABRIEL, General, USAF
Chief of Staff

Prepared by WR-ALC/MMSRAC (AV 468-6345)

ROBINS AFB MSG R142259Z SEP 82

RELATED TO TCTO 1C-130-1107

PAGE 3 RUVRAAA4816 UNCLAS
RUCLIF/USDAO AMMAN JC//AF MNT//
RUCLRFA/TURKISH EMBASSY OFFICE OF THE DEFENSE ATTACHE
AIR PROCUREMENT OFFICE
1222 MASS AVE NW
WASH DC 20008
RUFLWFA/JUSMMAT ANKARA TY//AFLG//
RBDTYI/HQ STRIKE COMMAND HIGH WYCOMBE
BUCKINGHAMSHIRE UK//STRIKE ENG 24C//
ZEN/DIR MAT MGT ROBINS AFB GA//MM-UK//
RUVAFLC/HQ AFLC WPAFB OH//MI-ID/LOA//
RUVAMIA/AFLC ILC WPAFB OH//CC//
RUCLBLA/AFPRO LOCKHEED GA CO MARIETTA GA//EN//
ACCT AF-ACXJRF
BT
UNCLAS
SUBJ: C-130B/E CURRENT OPERATING RESTRICTIONS AND STRUCTURAL INSPECTION TIME COMPLIANCE TECHNICAL ORDERS (TCTOS).
1. THE C-130 SYSTEM MANAGER IS FORMALIZING A FLIGHT MANUAL SAFETY SUPPLEMENT, T.O. 1C-130B-1SS-211, IMPOSING OPERATING RESTRICTIONS ON CERTAIN USAF C-130B/E AIRCRAFT AFFECTED BY TCTO 1C-130-1107.

RECEIVED
SEP 15 1982
ENGR'G TECH
DATA FILES

PAGE 4 RUVRAAA4816 UNCLAS
EXPECTED RELEASE DATE OF THIS SAFETY SUPPLEMENT IS 20 SEP 1982. NORMAL DISTRIBUTION OF THIS SUPPLEMENT WILL BE MADE IN THE NEAR FUTURE. THIS SUPPLEMENT WILL IMPOSE ZERO FUEL WEIGHT/FUEL WEIGHT RESTRICTIONS PLUS ADDITIONAL OPERATING RESTRICTIONS UPON AFFECTED AIRCRAFT.
2. TCTO 1C-130-1107 DATED 3 SEP 1982 REQUIRES NONDESTRUCTIVE INSPECTION OF OUTER WING GENERAL SPANWISE SPLICE AND REAR BEAM CAP, FLAP TRACK FITTING AT OWS 162 AND SPAR CAP THICKNESS CHANGE TO OWS 146 ON CERTAIN USAF C-130B/E AIRCRAFT. THIS TCTO IS ESTIMATED TO REQUIRE 62.5 MAN-HOURS AND IS TO BE ACCOMPLISHED BY FIELD UNITS WITHIN 30 DAYS AFTER TCTO RECEIPT.
3. AN ADDITIONAL TCTO AFFECTING USAF C-130B/E AIRCRAFT REQUIRING INSPECTION OF FATIGUE CRITICAL AREAS IN OUTER WING FUEL TANKS IS BEING PREPARED WITH ANTICIPATED RELEASE DATE OF 15 OCT 1982. DUE TO THE LARGE NUMBER OF MAN-HOURS ANTICIPATED FOR THIS TCTO, COMPLIANCE AT DEPOT FACILITIES OR BY DEPOT FIELD TEAMS IS EXPECTED. COMPLETION OF THIS TCTO WILL RELIEVE ALL OPERATING RESTRICTIONS IMPOSED BY FLIGHT MANUEL SAFETY SUPPLEMENT.
4. REQUIREMENT FOR THESE INSPECTIONS HAS PRIMARILY RESULTED FROM A RECENTLY COMPLETED DURABILITY AND DAMAGE TOLERANCE ASSESSMENT

PAGE 5 RUVRAAA4816 UNCLAS
(DADTA) WHICH IDENTIFIED SEVERAL NEW AND POTENTIALLY CRITICAL FATIGUE AREAS OF THE OUTER WING WHICH SHOULD BE INSPECTED IMMEDIATELY, BASED UPON CURRENT USAF OPERATIONAL USAGE PROFILES.
5. CERTAIN AIRCRAFT HAVE BEEN EXEMPTED FROM THESE RESTRICTIONS AND INSPECTION REQUIREMENTS. GENERALLY, AIRCRAFT EXEMPTED ARE THOSE WITH

.OW FLYING TIME (BELOW 5000 HOURS) OR LOW UTILIZATION IN MORE SEVERE
ISSION ENVIRONMENT, SUCH AS LOW LEVEL OPERATIONS. ALSO EXEMPTED
RE THOSE AIRCRAFT WHICH HAVE HAD ALL WING LOWER SURFACE MAJOR COM-
ONENTS (PANELS AND SPAR CAPS) REPLACED DURING DEPOT OVERHAUL.
. ABOVE INFORMATION PROVIDED FOR YOUR INFORMATION AND ACTION AS
EEMED APPROPRIATE. QUESTIONS MAY BE ADDRESSED TO WR-ALC/MMSR,
CBINS AFB GA, ATTN MR ROBERT S. MESSER, AUTOVON 468-3582.
T
4616

VNNN

ZYUW ZFDY RUVRAAA4816 2572219-UUAO--RUCLBLA
ZNR UUUAC
P 142259Z SEP 82
FM DIR MAT MGT ROBINS AFB GA//MM//
TO RAYAAC/RAAF HQ SCENG MELBOURNE AT//SOAIRENG//
RCCBLSA/CANDEF WASH DC//SSOAB//
RUCLRFA/AIR ATTACHE EMBASSY OF COLUMBIA
2118 LEROY PLACE NW
WASH DC 20008
RUCLRFA/OFFICE OF THE DEFENSE ATTACHE
EMBASSY OF REPUBLIC OF INDONESIA
2020 MASSACHUSETTS AVE NW
WASH DC 20036
RUCLRFA/GOV OF ISRAEL
SUITE 607 852 THIRD AVE
NEW YORK NY 10022
RUCLRFA/OFFICE OF THE DEFENSE AND ARMED ATTACHE
EMBASSY OF THE HASHEMITE
KINGDOM OF JORDAN
4602 KENMORE AVE SUITE 1210
ALEXANDRIA VA 22304
[illegible]BLSA/NZDEF WASH DC

AFP

RECEIVED
SEP 15 1982
ENGR'G TECH
DATA FILES

PAGE 2 RUVRAAA4816 UNCLAS
RUCLRFA/DEFENSE PROCUREMENT DIVISION (AF)
EMBASSY OF PAKISTAN
2221 R ST NW
WASH DC 20008
TELEX 992348/PAREP
RUCLRFA/AIR ATTACHE EMBASSY OF THE REPUBLIC OF SINGAPORE
1824 R ST NW
WASH DC 20009
RUCLRFA/DEFENSE AND AIR ATTACHE
SWEDISH EMBASSY
SUITE 1200
600 NEW HAMPSHIRE AVE NW
WASH DC 20037
RXGHAG/TURKISH AIR FORCE ANKARA TURKEY//TUAF//
RBDWCAP/MODPE CASTELWOOD LONDON UK// MAPZ//
INFO ZEN/DIR MAT MGT ROBINS AFB GA//MM-AT//
ZEN/DIR MAT MGT ROBINS AFB GA//MM-CN//
RUESGB/USMILGP BOGOTA COLOMBIA//AF SRC//
RUEHJA/OMADP DJAKARTA INDONESIA//
ZEN/DIR MAT MGT ROBINS AFB GA//MM-ID//

APPENDIX 2

NAVY/MARINE C-130 FLEET NDI

Model C-130 Aircraft - A Limited Analysis

- 57 UR involving NDI from 1975-1982.
- 23 aircraft
- 15 aircraft had bleed air duct problems
  --31 different UR
  --8-10 different sub-components (P/N not always clean/covert)
  --+ 18 "new ducts" (P/N not listed)
- 9 aircraft had longeron fitting problems initiated by "acceptance inspection" of aircraft transferred from another activity. Procedure used was modified AFTO 10-130A-36 procedure.
- 2 wheel problem UR
  --5 incidents of main landing gear bead radius cracks
- Remainder--one of a kind incidents involving improper maintenance actions, manufacturing defect, etc.
  --Nose gear steering collar--crack started from sharp corner.
  --Access door areas outer wing panel--repair of previous crack between holes using Al alloy angle vice 4130 steel.
  --Cracked bolts--not detected and painted over.
  --Crack initiated in welded area--porosity and lack-of-fusion.

61/1-17

BLEED AIR DUCT PROBLEM

Ducts initially checked by "Air Frame Bulletin 76 Cold Air Check". Early production used laced insulation which could be opened and joints checked for cold air leakage. Later usage of integral insulation severely reduced effectiveness of this inspection. Bleed air system check prior to take-off included minimum pressure/time requirement.

Near-catastrophic incident May 1976--duct rupture blew off portion of wing leading edge. Evidence of corrosion detected. RT inspection initiated and several incidents of severe corrosion detected--"Severe corrosion resulting from improper inspection and inadequate repair criteria." Additional RT findings; cracks in welds, lack of weld, lack of penetration, weld porosity, buckle in weld area.

RT of one new component following accidental impact detected welding defects not traceable to impact. Additional seventeen new components X-rayed and contained lack of penetration, lack of weld, cracks, V-shaped dents and weld buckles. Investigation revealed 3rd tier subcontractor at fault. Change of contractor and routine inspection of bleed air duct system at depot has precluded further problem.

CONCLUSIONS--BLEED AIR DUCT PROBLEM

1. Design change increased severity of an existing problem that was not being "tracked".
2. Lack of maintenance NDI permitted corrosion problems to grow to catastrophic proportions.
3. Additional benefit of X-ray procedure was detection of manufacturing benefits.

61/1-18

4. Change of contractor and assumed inclusion of proper QA corrected manufacturing problem.
5. Inclusion of periodic depot inspection and rework (assumed) has precluded field problem.

LONGERON PROBLEM

"Acceptance inspection" check of logbook for aircraft transferred among Navy ownership showed incidence of hard landing and requirement to inspect longerons following such an incident. Navy inspection, using modified AFTO 10-130A-36 procedure, detected cracks. Inspection of other Navy aircraft at this and other maintenance locations indicated existence of similar Navy problems but of lesser incidence.

Subsequent development and inclusion of a periodic inspection of the longerons has controlled this problem.

CONCLUSIONS - LONGERON PROBLEM

Increased intra-and/inter-service communication regarding NDI practices leads to better application on NDI and improved safety and reliability for all concerned.

WHEEL PROBLEM

Although there were only two UR for wheels, they included five incidents. Four of the incidents occurred within one squadron in approximately five months and involved near failures. In the fifth case, the wheel blew up and a section impacted and damaged other parts of the aircraft. The sad part of this story is that wheels were being inspected by an eddy current procedure but later investigation determined that an incorrect probe was being used.

61/1-19

CONCLUSION -- WHEEL PROBLEM

1. NDI procedures must be "damn-fool proof" and followed by QA action to assure correct/complete application.
2. See also general conclusions #2.

61/1-20

TASK GROUP
ON
NDE
IN
ROTARY-WING AIRCRAFT
IV. A. 3

IV. A. 3. INTRODUCTION: ROTARY-WING AIRCRAFT

In the following sections, NDE problems associated with the manufacture of helicopters as well as problems peculiar to their maintenance will be addressed. Also, a brief description of the difficulties of the helicopter as a flying machine are related. These special characteristics of the helicopter magnify the effect of generic material and processed weaknesses. This fact has fostered a "fail-safe" design syndrome, which in turn, requires a rigorous approach to raw material inspection, as well as in-process inspection operations, and mandates the need for an equally rigorous maintenance inspection program. Selected details of these areas as they presently relate to helicopter manufacturing and operations are presented. They are specifically: a limited history of NDE, naval helicopters; H60, actual operating experience; and, typical inspection processes, helicopter dynamic components.

Through the evaluation of design and materials development, the future helicopter will be patently different from that of today. The advanced design of the H60 series aircraft employs a significant amount of composite structure; however, this quantity is still well below one-half of the total helicopter structure. The helicopter of the 1990s will be 80 to 90 percent composite structure. This change will force change in the present approach to NDE and will require serious effort in the development of new techniques. Recommendations for funding specific future projects are given relative to automated inspection systems and embedded acoustic sensors that will provide highly reliable defect detection during manufacture and continuous monitoring during flight.

Several areas of concern are commented on that are not peculiar to the helicopter. These areas relate to the inconsistency of government regulations associated with NDE, the lack of trained personnel and modern equipment in operational units, and the poor NDE data compilation/analysis methods used which do not allow meaningful reliability tracking--providing only questionable and incomplete historical records.

IV.A.3. HELICOPTER TASK GROUP

The helicopter has long been considered a fatigue machine. With this concept, non-destructive inspection (NDI) historically has played an important role during helicopter manufacturing and maintenance operations. That is, it has been necessary to detect relatively small defects with a high degree of confidence to provide affordable and reliable systems. Advancement in materials technology, the necessity to improve reliability and still maintain affordability provides NDI with its present challenge.

The standard NDI techniques have changed little over the past decade, and application of new technology, i.e., acoustic emission, holography, and thermography, has been slower than initially expected. Recently, however, wide application of the microprocessor and minicomputer have allowed a burst of activity leading to advancements in the field of NDI. The signals from such NDI methods as eddy current, ultrasonic and even radiography have always contained more information than could be defined by previous technology. Digitizing and manipulating these data to better analyze material condition is a significant event. Analysis of inspection data can now be accomplished in several ways during or after the inspection operation itself, at the same time exact and repeatable motion can be imported to the detection device in contact with the component. Such advancements allow greater reliability of NDI methods through a reduction of dependency on human interpretation and manipulation. Signal analysis devices are in operation today and computer control (automation) of devices is proliferating.

Consequently, NDI technology has developed to the point it has the capability to provide answers to questions that have not been asked. Still, development must continue particularly in the application of various methods. Both traditional and non-traditional, NDI methods can now be applied to areas not

previously envisioned, such as during flight operations via embedded systems.

These today capabilities have created new problems and emphasized existing ones. These problems are especially apparent in the areas of: Government Requirements, Personnel Training, Data Compilation/Analysis.

The following Figures A through E, though not exact details of present production H-60 main and tail rotor blades, are typical examples of general manufacturing methods and corresponding in-process inspection methods of a titanium spar composite blade and a composite spar tail rotor blade.

A. MAIN ROTOR BLADE IN-PROCESS TESTS

This figure shows major blade components and the inspection/tests associated with these components.

Ultrasonic inspection is concerned with the inboard section of the blade, i.e., the root end laminate detail and laminate to blade bond line. This detail is a laminated graphite structure.

The laminate is inspected using a C-scan pulse echo technique, water immersion with back reflector plate. The laminate to blade bond line is ultrasonic inspected using manual scanning techniques.

B. MAIN ROTOR BLADE IN-PROCESS TESTS

This figure shows, in cross section, the detail components of the main rotor blade. It should be noted that the H-60 model helicopter does not use split core fabrication methods.

The primary component relative to NDI is the spar; this component is a welded titanium tube which runs the full length of the main rotor blade.

The spar is an inspection intensive component; it receives two destructive/metallurgical tests taken from end pieces of the spar during processing. It also receives two NDI methods, i.e.,

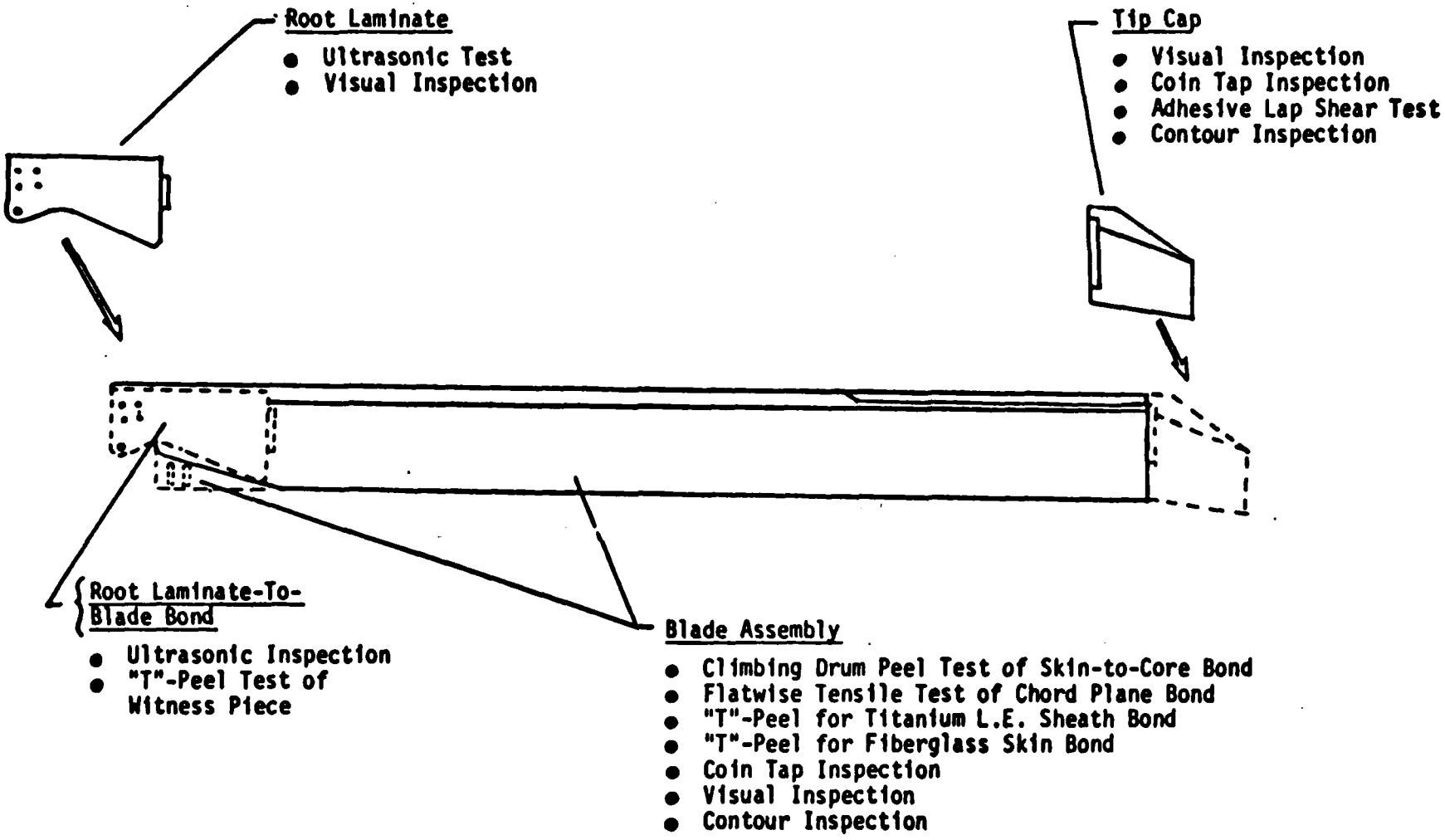

FIGURE IV-A. Main Rotor Blade In-Process Tests

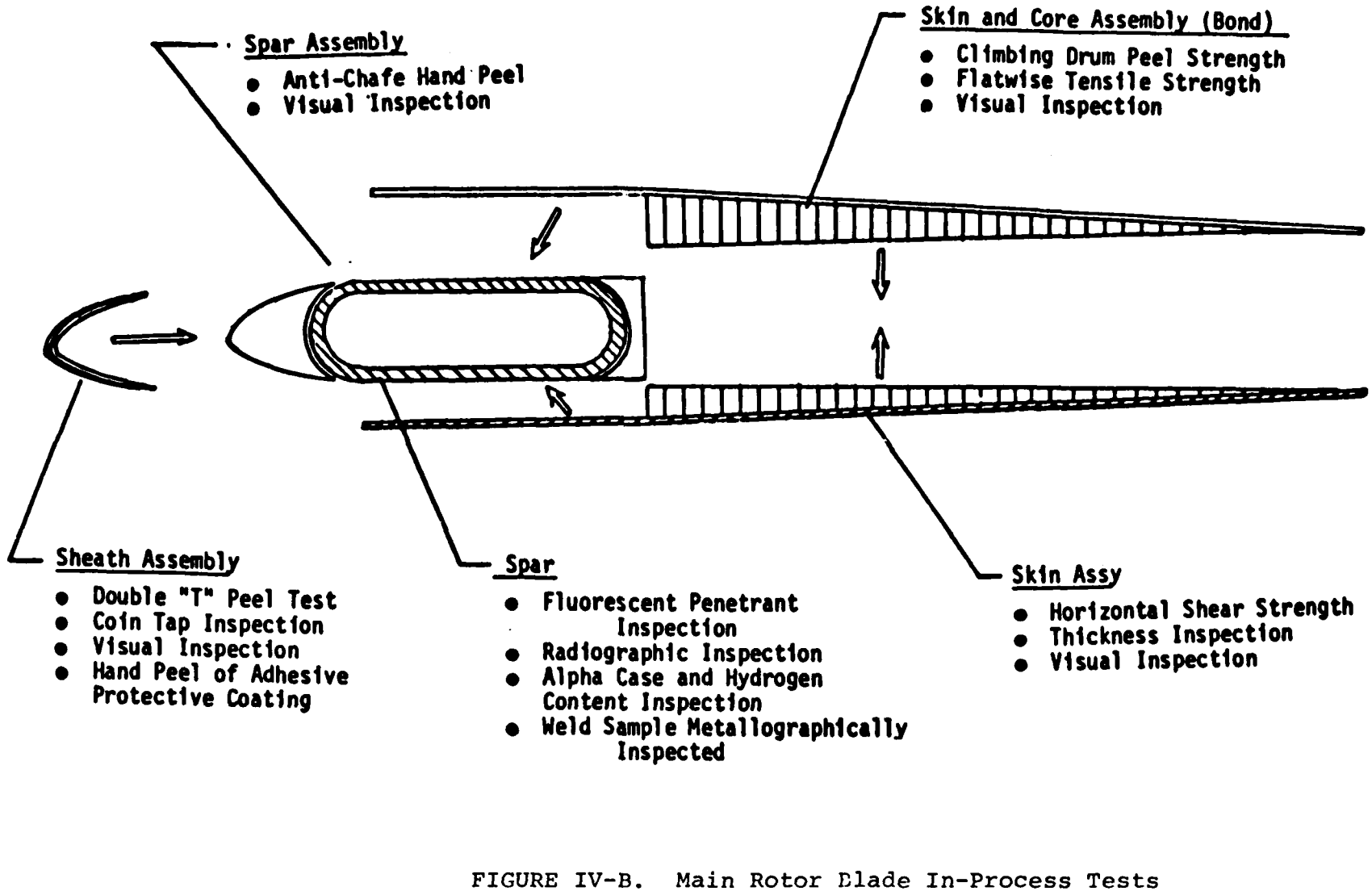

FIGURE IV-B. Main Rotor Blade In-Process Tests

fluorescent penetrant inspection (FPI) and radiographic inspection (weld area only).

MIL-I-6866 is the applicable FPI method. A unique inspection technique is used. A high power ultraviolet light source projects light through a series of lens into the I.D. of the spar. This light is reflected on the spar tube walls. Inspection is performed through a monocular lens system. Radiographic inspection of the weld is performed using a movable head, automatic kv control inspection unit. Strip film is soaked through the tube and located against the weld head using a pneumatic tube. Film is developed in an automatic processor and read in a conventional manner.

The FPI and RT equipment are unique, one-of-a-kind inspection devices.

C_1/C_2. BLADE INSPECTON METHOD (BIM)

The BIM is mounted at the inboard end of the main rotor blade. This system, a differential pressure sensor, is an in-flight NDI monitoring system used to detect the presence of through wall cracking of the spar.

Simply explained, the main rotor spar is sealed and pressurized internally; the BIM will detect any pressure drop of 1.5 psi or greater. The pressure condition can be determined by the visual appearance of the BIM via different color bands or through an electrical indicator mounted in the cockpit. Figure C_1 shows the BIM in normal condition, C_2 shows the BIM in test condition or pressure loss condition.

D. TAIL ROTOR BLADE IN-PROCESS TESTS

This figure identifies the major components of the tail rotor blade assembly.

The only NDI performed on the finished blade is a manual ultrasonic inspection in the attachment hole area.

63/2-3

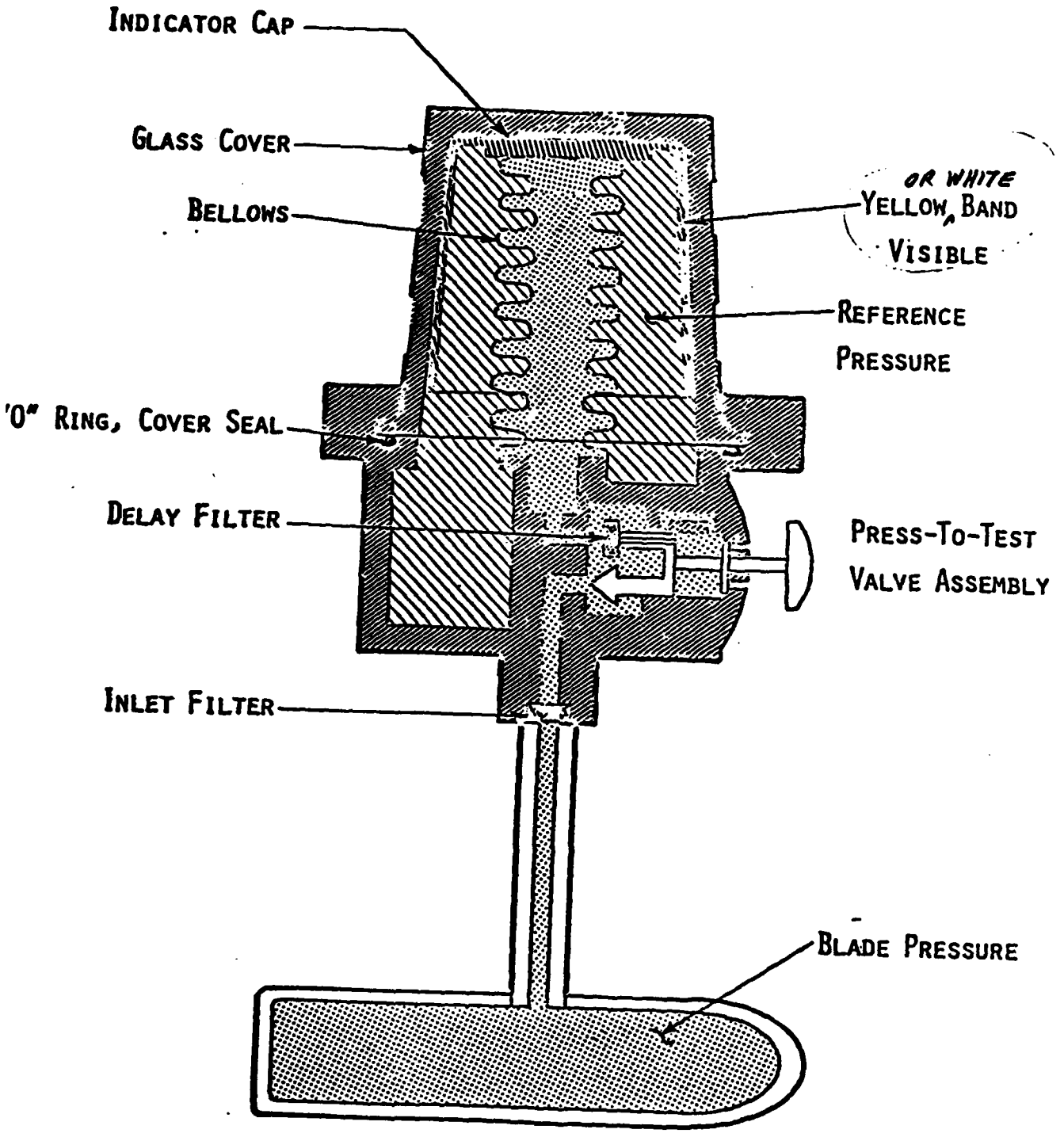

FIGURE IV-C_1. Normal Condition

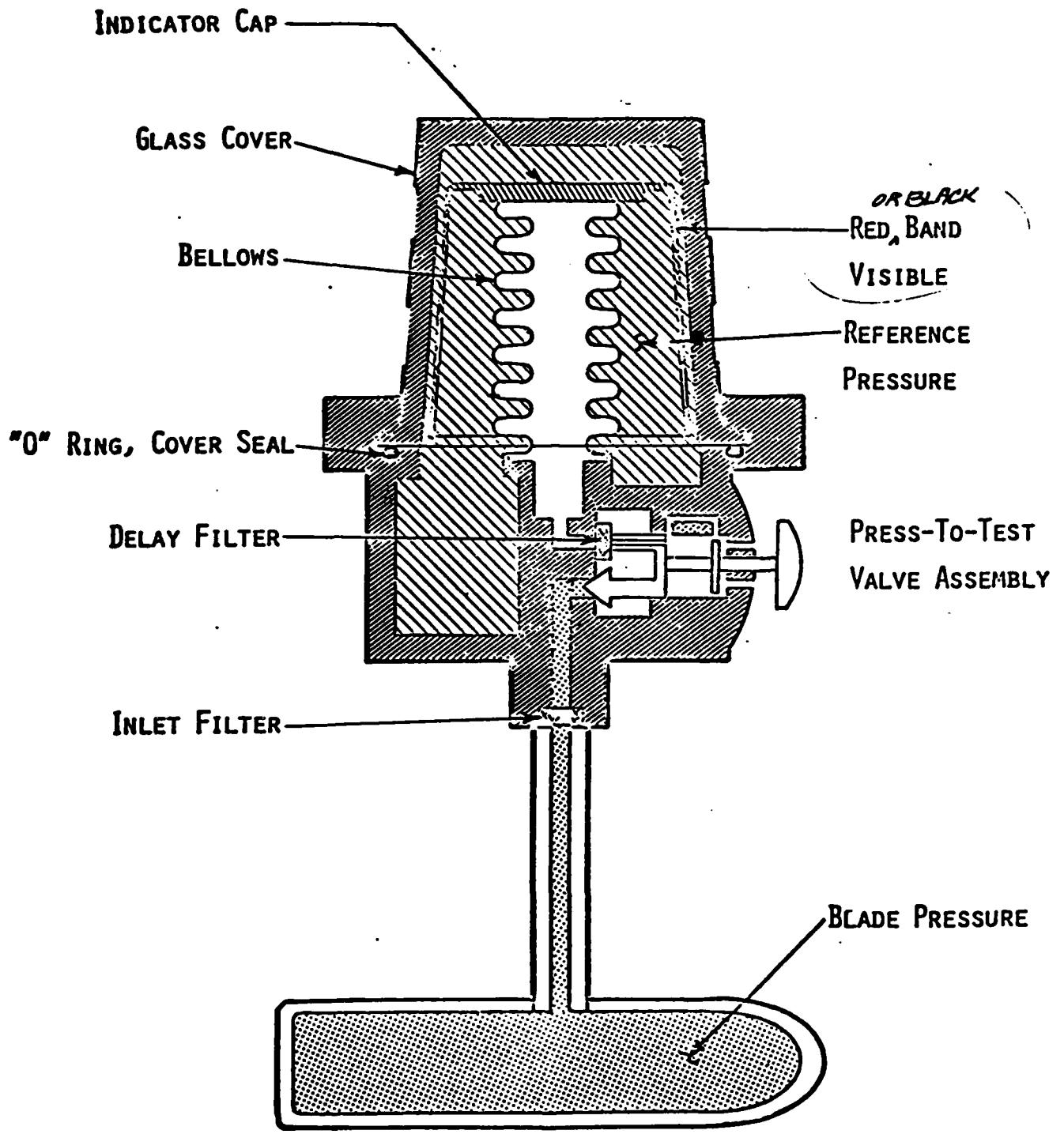

FIGURE IV-C_2. Press-to-Test Condition

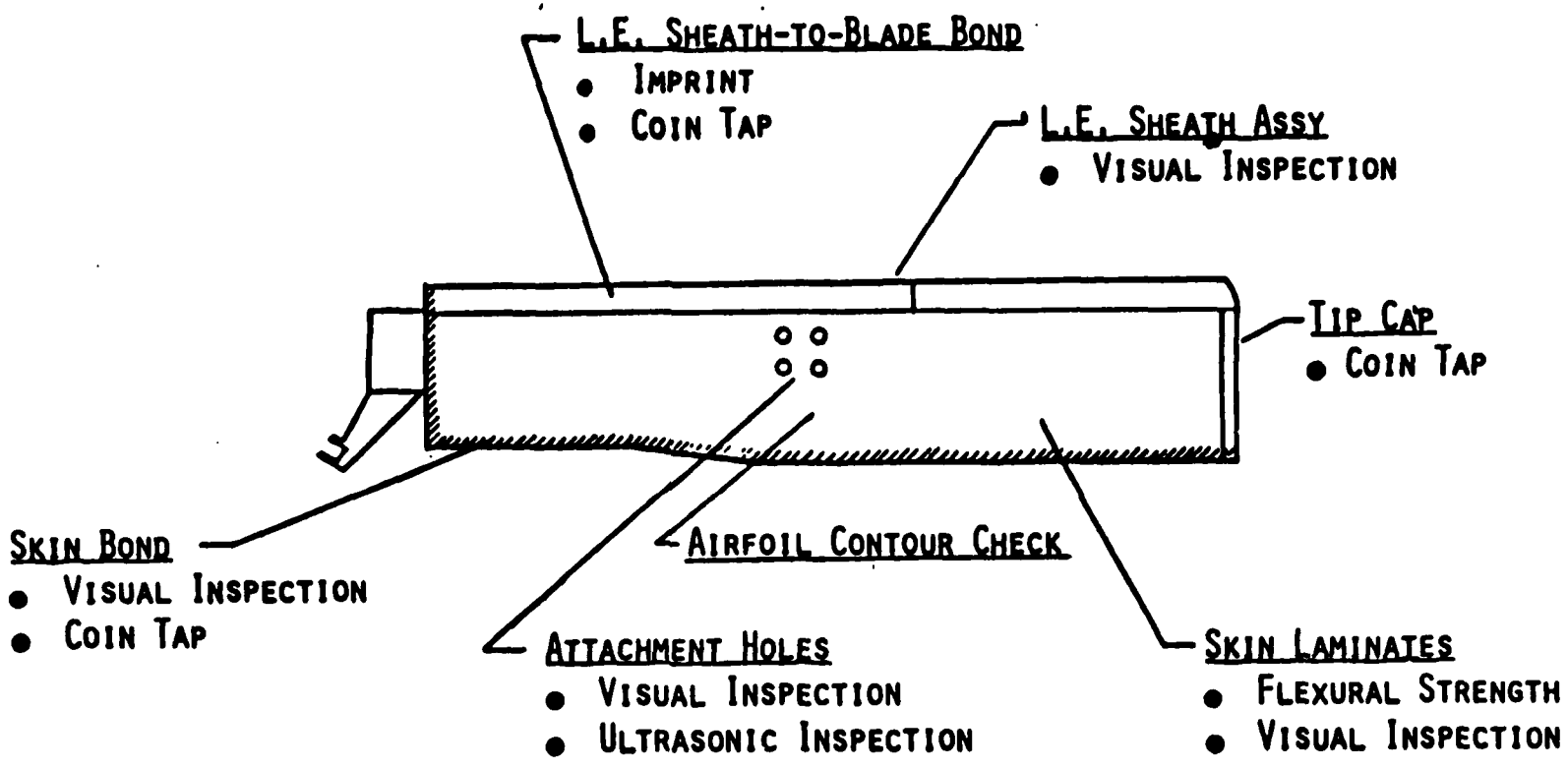

FIGURE IV-D. Tail Rotor Blade In-Process Tests

E. TAIL ROTOR SPAR IN-PROCESS TEST

The tail rotor spar is a laminated graphite structure.

As molded the spar is ultrasonic inspected using water immersion, through transmission C-scan. The spar is inspected all over by this method except for the laminate step area at the spar center.

A manual ultrasonic inspection is performed on the finished spar around the drilled holes at each end and around the center elliptical hole.

F_1, F_2, F_3. FIELD ULTRASONIC INSPECTION TECHNIQUES

These figures show the details of an ultrasonic method established for field inspection of an internal component inside the main transmission. The inspection was performed on the aircrafts, the only removal required was that of an oil filler.

A tool, i.e., probe, was devised to affect positioning of dual transducers in the proper location on the component to be inspected. By manipulation of a switch on the outer "Post" probe each transducer could be activited; couplant was supplied by means of a hand pump through the hollow probe. During inspection the probe remained stationary and the part was rotated 360° by hand manipulation of the main rotor blades (Fig. F_1). Figure F_2 shows a detail of the probe-component contact area; this view is rotated in the horizontal position.

Figure F_3 is an exhibit of the reference standard made for calibration of equipment prior to inspection.

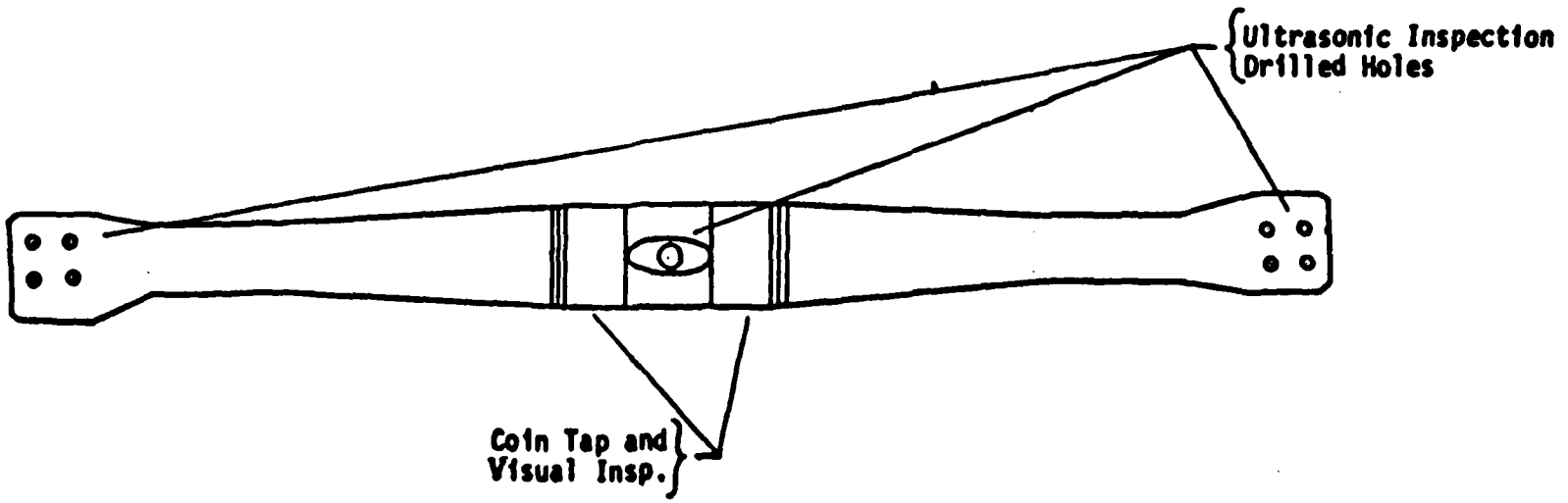

As Molded Spar

- Ultrasonic Inspection
- Horizontal Shear Test
- Dimensional Test
- Visual Inspection

Finished Spar

- Ultrasonic Inspection
- Visual Inspection
- Coin Tap Inspection

FIGURE IV-E. Tail Rotor Spar In-Process Tests

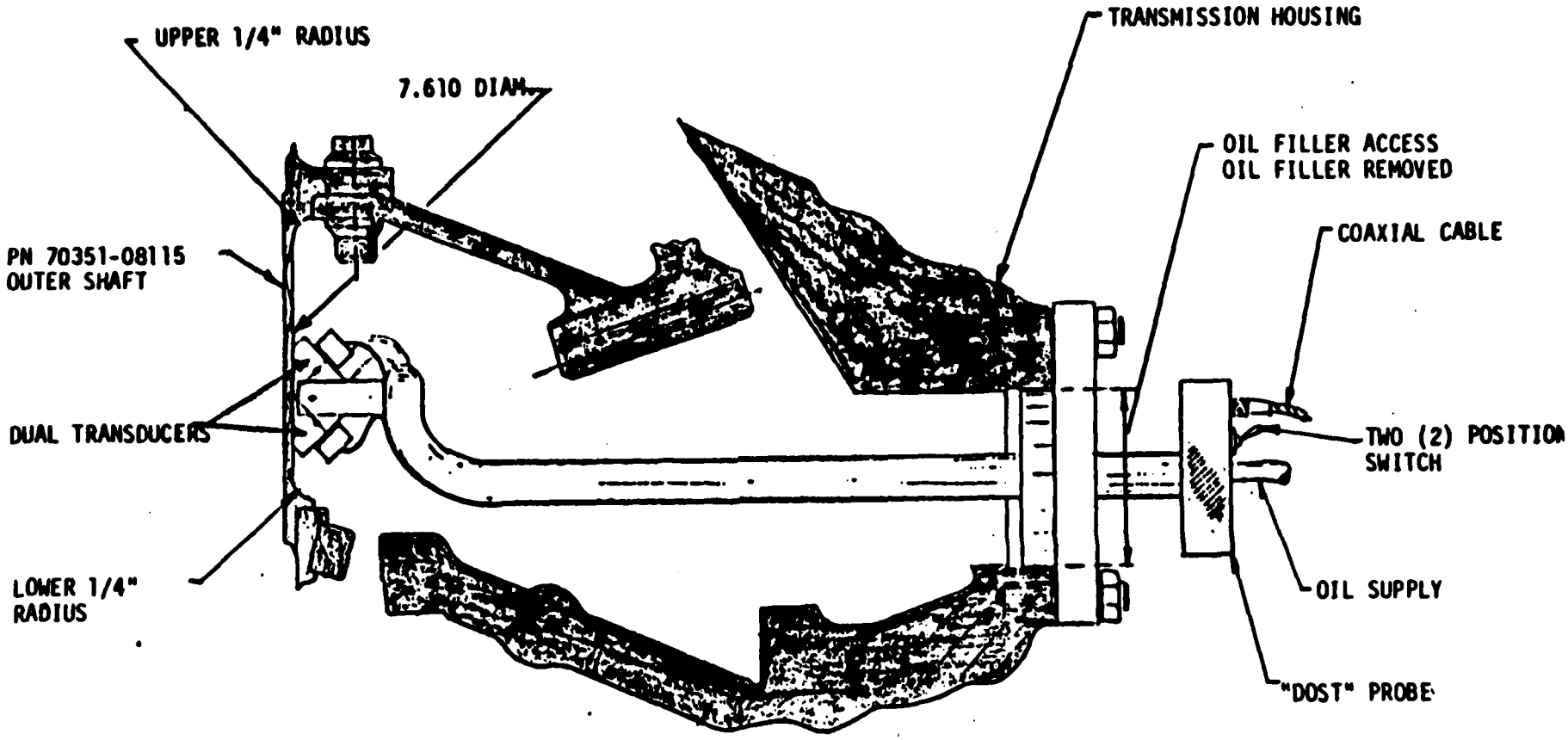

FIGURE IV-F_1. Ultrasonic Inspection Method

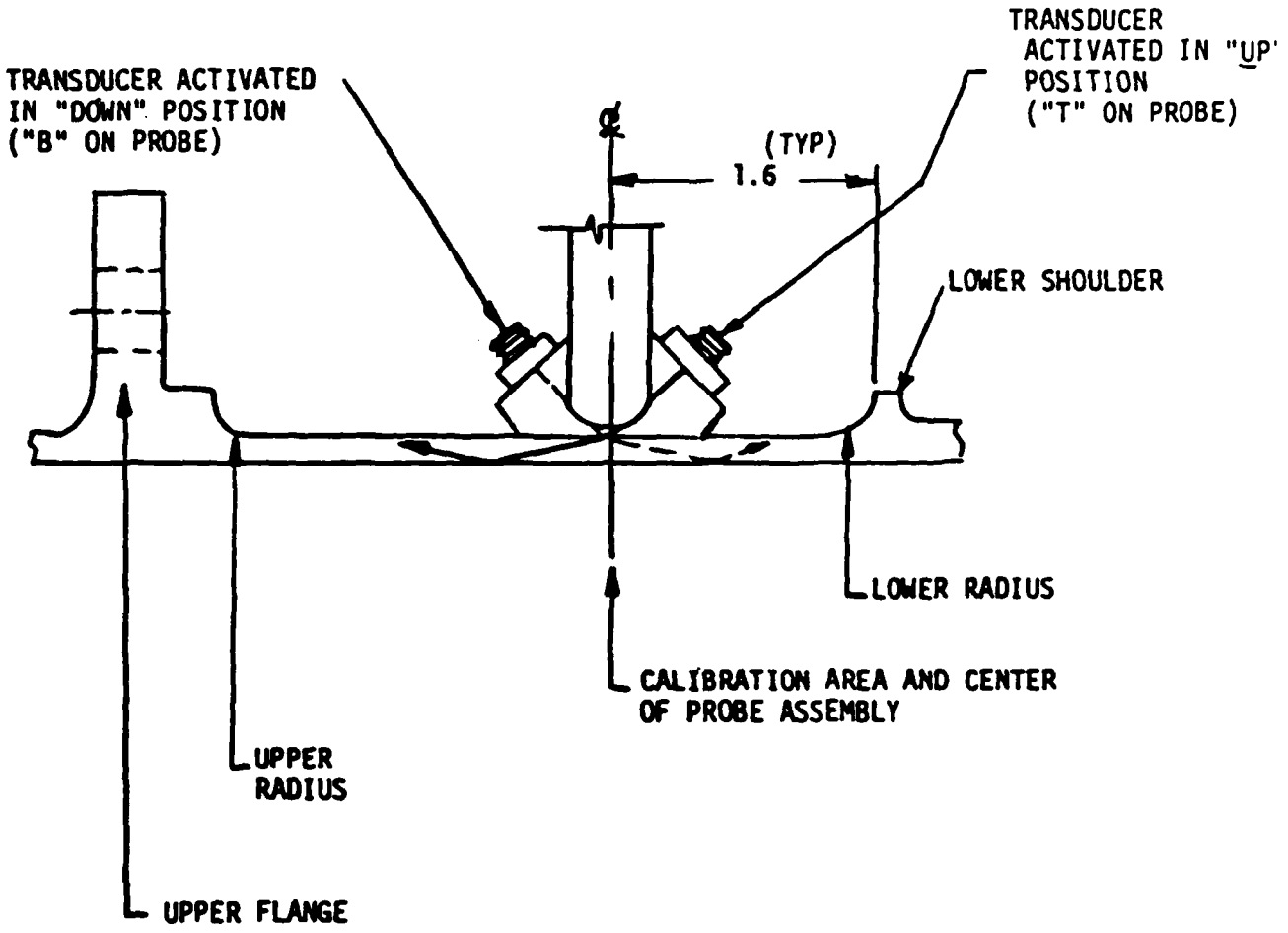

FIGURE IV-F_2. Location of Calibration Area

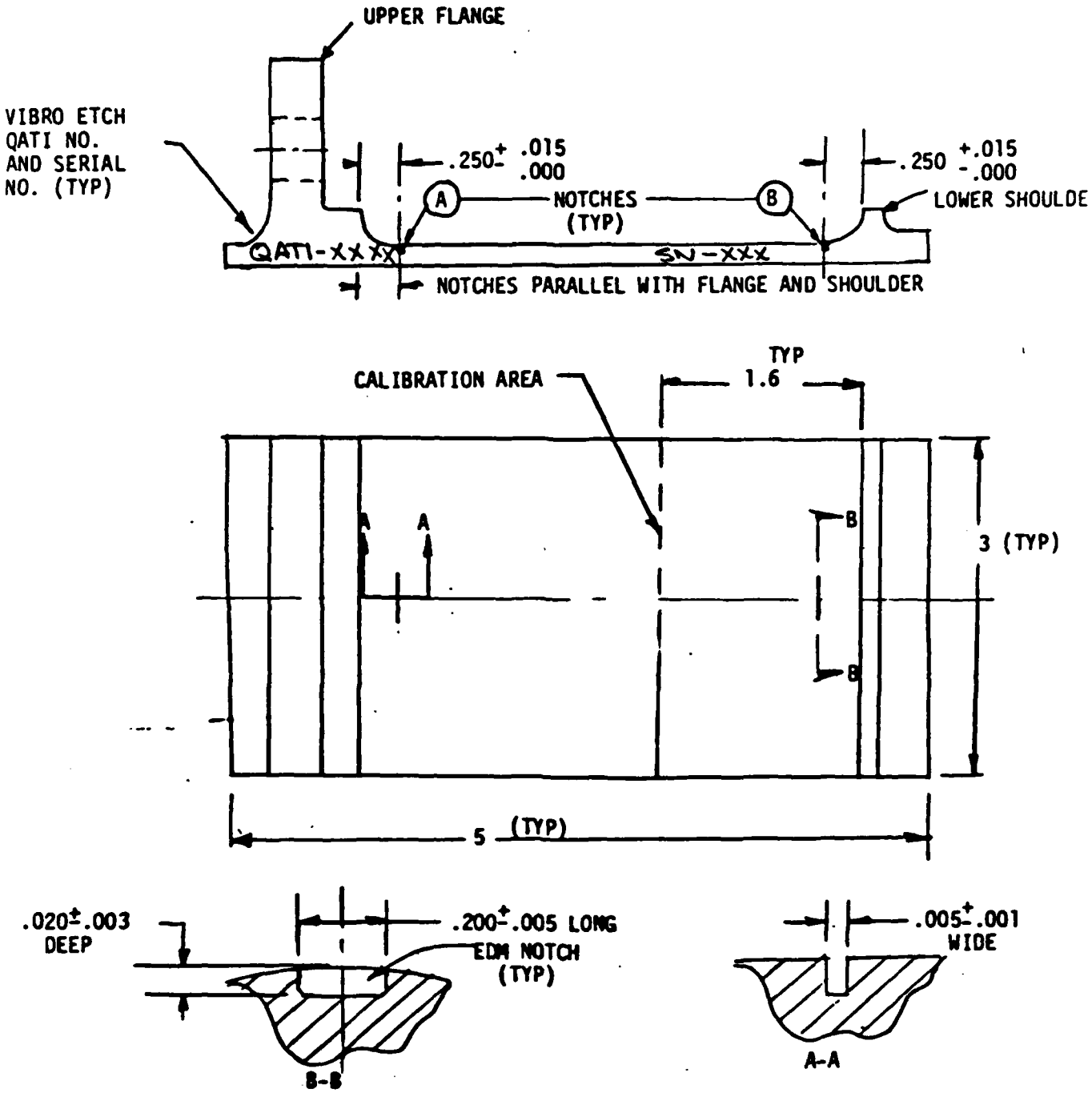

NOT TO SCALE
NOTCHES MADE BY ELECTRICAL DISCHARGE MACHINE (EDM) METHOD
MATERIAL - SEGMENT OF 70351-08113 OUTER SHAFT
NO PERIODIC CALIBRATION REQUIRED - NOTCHES VERIFIED DURING MANUFACTURE

FIGURE IV-F3. Ultrasonic Reference Standard

THE HELICOPTER FAMILY

As a subset of the aircraft family, the helicopter represents a unique set of design, manufacturing, operational and maintenance characteristics. Helicopters have been described, not too incorrectly, as flying fatigue machines. At their best, they have many of the same problems as fixed wing aircraft plus a separate group of helicopter peculiar problems.

The most obvious unique fixture is the set or sets of rotors that permit the helicopter to fly without forward vehicle motion (called hover) and to transition from hover to forward flight and return to hover through the entire speed range of the vehicle without the "stall" (non-flying) range of a fixed wing aircraft. This feature is the basic value of the rotary wing machine - the ability to operate from small, unprepared sites. It has, of course, evolved into a more versatile vehicle in military and comercial applications.

The basic reliability and maintainability properties of the helicopter are highly dependent upon many design decisions, assumed operating loads and flight profiles (missions), materials selected for and the manufacturing processes used in the construction of the vehicle, and the operational and maintenance experience under which the helicopter must survive. The detection of manufacturing defects or incipient in-service failures is highly dependent upon available inspection processes, skilled inspection personnel and reliable inspection equipment.

The inspection processes can be generally grouped into visual, destructive and non-destructive. The visual inspection processes include all the "general" examinations such as dimensional, color, surface finish and related inspections either aided, or unaided. It does not include the physical and chemical properties inspections/tests which are frequently of a destructive nature and generally conducted on samples of the materials

to be used in the manufacturing process but may extend up to full scale component/end item fatigue tests.

The field of non-destructive test/inspection/evalution encompasses those processes which allow an examination of one or more physical properties of operational hardware without impacting the future operational use of the hardware (assuming that the process does not detect a cause of removal from service). The classical processes include X-ray, magnetic particle, dye penetrant, ultrasonics, eddy current and acoustic emission. There are many other processes available including techniques still under study.

For the helicopter there is a need to apply many of the available NDT processes as well as a need to develop and produce new processes. Helicopter designs are rapidly transitioning from the "all metal" category to the "all composite" design in order to reduce weight, increase reliability and to east the requirements for critical materials. With this transition is the attendant requirement to provide the improvements in existing NDT technology for these new materials as well as to rapidly develop the processes and equipment to cover the mess where the current technology does not provide an adequate NDT process.

Helicopters have been with us for less than fifty years (an earlier bird, the autogyro, can not be included since it is an oversimplication of what is today referred to as a rotary wing aircraft as evidenced by the almost complete absence of that type aircraft from everyone's inventory).

In that short interest the helicopter has matured through several design generations and has been a productive military and commercial vehicle with an expanding future.

Extensive sets of experience data have been collected that, in general, indicate that a conservative design philosophy is being supplied. This is wholly understandable especially with respect to the rotor blades, rotor heads, and the overall fuselage and attendant subsystems. Failure of non-redundant flight

critical items is tantamount to a catastrophic failure generally accompanied by the loss of crew, passengers and the helicopter.

As with any maturing body of technology, the design of helicopters is being pressed into a highly competitive arena where not only if the cost (and therefore the design) being challenged by various helicopter concepts for a given application but they are also in competition with other modes of surface and air transportation for selection in a tightening economic situation. This competitive environment will (if it hasn't already) severely challenge the designer's ability to maintain the current high levels of conservatism since those attributes constitute one of the high cost drivers of this family of aircraft. This will result in an increasing requirement for the inspection and test of manufactured materials to assure that the reliability and maintainability of the final product is enhanced/improved. It appears that the helicopter industry will have to make an increased use of NDT processes, mostly in an automated configuration, in order to effectively compete.

ACTUAL OPERATIONAL EXPERIENCE

A recent survey of the operational experience on a new member of the helicopter family, the UH-60A (Blackhawk) has been made. This survey reflects some of the initial experience that the Army has had that provides a feedback to the Navy for the SH-60 (Seahawk) and the Air Force for the H-60 (Nighthawk). These three models are of a single basic design with adaptations to the individual service missions. The survey therefore provides a first-cut look at the design.

Three factors are important:

- The survey covers a single member of the helicopter family and is not necessarily a reflection of goodness or badness of a single design concept.
- The survey covers the initial introduction of a design into the Army environment where the operators and maintenance personnel were at the bottom of the learning curve on this helicopter.
- The design is undergoing progressive maturing through a continuous design improvement effort to eliminate or reduce such shortcomings as seem appropriate from a reliability and maintainability prospective (cost of ownership including safety). A similar survey at progressive intervals would be expected to reflect significant reductions in maintenance events and a similar reduction in the seriousness of the maintenance actions required.

Attachment A presents the overall survey. It can be summarized as follows:

- There are more than enough maintenance action codes (214) for the mechanic to report upon.

- There is no code to reflect NDT tasks. (This is understandable since there is little NDT capability in the field and no NDT capability at the unit level).
- There are some (up to 24) maintenance codes for which there is a "potential" for NDT processes to either detect incipient failures or to provide a means for determining the appropriate maintenance action required (use as is; repair; scrap).
- The survey covered 188 UH-60A aircraft at Fort Bragg and Fort Campbell which covered 32,100 flying hours and reported 42,132 maintenance events.
- The highest number of reported maintenance events (5,364, approximately 12% of all reported maintenance actions) was for code number 070 (broken/cracked/fractured/punctured).
- A total of 8,701 (approximately 21%) maintenance events appear to have potential for NDT to either detect an impending failure condition or to establish the repair limits on worn parts.

FLEET NDE OF NAVAL AIRCRAFT - A LIMITED HISTORY

This exercise was conducted in an attempt to obtain a history of the types of components which required repetitive use of non-destructive inspection techniques within the Naval Air Systems Command community. The information was derived from an analysis of UR, Unsatisfactory Reports, resulting from non-destructive inspections performed in the Fleet, at the Intermediate Maintenance Activity level and highlights both "success" stories and "horror" stories.

The aircraft selected for the R/M study were the C-130 and the H-60. Since the H-60 is a relatively new Navy program other helo experience was included as a guide of expected behavior.

The analysis, while not directly related to the H-60 helocopter is still useful although based on somewhat incomplete data, e.g. there is no information on the total number of inspections performed or on the total number of any type of aircraft in operation. No cost or man-hours data is included. An important deficiency is that not all of the rejected parts were subjected to engineering investigations and therefore they could not be verified and the failure mode determined. Improved data, containing key elements such as NDE techniques used, more specialized work unit codes, parts serial numbers, etc. should be tracked by engineering personnel at the Cognizant Field Activity, the manufacturer and in the NDE program manager's organization for development of maintenance trend analyses and feedback to designers, structures engineers, NDE R&D personnel and NDE applications managers. Additionally, such analyses should be performed using computer technology for more complete sorting and cross-indexing of data elements.

63/3-6

MODEL H-60

1 UR in '82

"While perfrmg an accept insp 2 cracks were found on main rast probe barrel. Dye penetrant insp verified a 1 in vert surface crack approx 5 in above HSG ring set scre hole. A second vert crack approx 1 1/2 in penetrating to a greater depth was found on opposite side about 1 in above lower HSG ring."

MODEL H-57

2 UR - 1 in '80 and 1 in '81

"Main rotor pillow blocks and trunion assemblies removed for PT of main rotor yoke assembly for suspected crack. Crack confirmed visually. Inboard to outboard crack, 1" long, from pillow block bore to tooling hole directly below. All aircraft operations temporarily suspended for main rotor yoke assembly inspection."

"One time insp. result of crosstube failure. 35 additional sqdn aircraft inspected. 24 fwd and 26 aft crosstubes cracked 1/32" to 2". Suspect fatigue. PT method. Mfr error."

MODEL H-1

- 92 UR involving NDT from '75-'82.
- 81 aircraft, nominally - 10 unidentified, 9 on 2 UR, 1 on 3 UR some UR reported on multiple aircraft w/wo Bu No.
- Main Rotor Blade Problems
  - 16 UR involving approximately 30 blades
  - Inspections in accordance with FB 115 and 131 UT method
  - Majority manufacturing defects
    Improper precleaning → poor bands → corrosion → debonding and separation of parts.

63/3-7

- Some handling and maintenance defects
  Ice removal - dents in skin, cracks, crushed core, etc.
  Improper skin repair - cracks.
- At least 2 blades were in storage 6 mo. after rework and found corroded upon removal from cans.

- Tail Rotor Area
  - At least 9 UR
  - Wide range of defects
    1 - Rotor Hub Assembly Spacer Sleve 23 cracks 1/8" to 1/2"
    1 - Mast Assembly - suspect crack - scratched
    2 - Trunnion cracks - not confirmed
    2 - Control chain - stamped sheet links - fine edge scratches
    1 - Crosshead - visual suspect crack, MT & RT negative R/R anyway - Engrg. Invest - slight forging defect - blended and returned RFI
    1 - Yoke assembly - field MT - cracked - E.I. plating erro.

  Others involving corrosion, corrosion removal, filler mat'l (impact) crack
- Soap, Chip Detectors, Filter Indicators
  - At least 9 UR involving engines, transmissions, hydraulic pump drive.
  - Almost all cases further investigation detected bearing and gear failures, worn shafts and rollers, etc.
- Wheel Problems
  - Eight cracked rims, bead seat area, detected by ET and PT

- Bolt Problems
  - 3 UR Servo mounting bolts
    20 overtorqued, improper washers, no washers
    8 cracked
    9 decarburized and wrong hardness
    2 no cadmium plating - pitted - cracked
  - 8 Spindle bolts - plating peeling - pitting
    16 from Supply - same condition
  - 2 Main Rotor Blade - sheared - damage to other parts by impact
  - Cap screw head failure - stress corrosion cracking
  - Drive Link bolts - field detected cracks by MT - NARF found score mark, no crack
- Squadron Multiple Inspections - There were several incidents where the Squadron initiated multiple plane inspections as a result of finding one deficiency, e.g.
  - Daily visual inspection found "working rivets" in the Lift Beam of one aircraft. Inspection of all squadron aircraft had following results:
    - Seven aircraft with "working rivets"
    - Three aircraft with cracked lift links
    - Four aircraft with cracked fuel fittings
    - Five aircraft with cracked lift beam webs
    - Cracks confirmed with PT
  - Tail Boom Attach Fitting - one found cracked during "phase" inspection
    - 8 other aircraft checked with PT, all cracked
  - Daily visual inspection of 90° Gearbox Output Shaft - suspected crack - NDI found deep scratch
    - 26 additional aircraft inspected, 4 more deficiencies detected

- Miscellaneous - remainder of reports were one or two of a kind and are noted below:
  - Cracked pitch horn - 2 incidents - Engrg. investigation detected stress corrosion cracking
  - Exhaust Diffuser - 2 incidents - cracks and sections missing
  - Induction Baffle - 1 incident - 2 cracks and pieces missing - FOD to No. 2 engine - Engrg. investigation "failure started in heat affected zone of spot welds, propagated by fatigue."
  - Red Blade Mixing Lever - cracked - improper staking of bearing on forging flash line led to stress corrosion cracking.
  - Scissors assembly - crack detected while greasing - grease fitting in forging flash line of bearing housing - stress corrosion cracking
  - Driveshaft - 2 incidents - field MT during 300 hr. inspection reported crack - E.I. confirmed plating scratches.
  - Drag Brace Mounting Lugs - cracks detected by E.T.
  - Rod End - new from Army Aviation Supply - reported cracked - E.I. detected forging defect, corrosion, and stress corrosion cracking.
  - Hoist Cable - loose strands detected during receiving inspection - E.I. confirmed calbe did not meet specification.
  - Fuel Flow Hose - inspection resulting from "fuel starvation" report - hose twisted, bent and blocked during improper installation.
  - White Stabilizer Bar -2 incidents - UT insp. during "Phase A" - E.I. confirmed score marks.
  - Vertical Fin Panel - crack initiated at sharp corner

SUMMARY AND CONCLUSIONS

1. There was a high incidence of original manufacturing and depot maintenance errors cited in the engineering investigations especially in regard to main rotor blades.
2. There was a somewhat smaller but still excessive number of cases where erroneous filed NDT resulted in removal of components and unnecessary engineering investigations.

MODEL H-2

- 119 UR involving NDT from '75-'82
- 73 aircraft, nominally - 13 unidentified
  11 aircraft - 2 UR
  11 aircraft - 3 UR
  1 aircraft - 4 UR
  1 aircraft - 6 UR
- Tail Rotor Gearbox Problems
  - 40 UR
  - 33 involved cracked mounting lugs detected by eddy current (ET) during "50 hr" inspection
  - 4 involved missing shims, washers or wrong washers
  - 2 involved cracked lug botls
  - 1 "SOAP" - bearing failure
  - 1 "Chip light" - pump shaft spline failure
  - 1 corrosion
  - 1 pitch control shaft - not confirmed during engineering investigation (E.I.)
  - 4 mounting lugs - not confirmed during E.I.
- Tail Rotor Blade Problems
  - 17 UR
  - 8 grease/water penetration of blade thru grip bore
  - 5 rejected by ET for cracks - 2 cases 5" to 8" result of prior deband - 1 after 1.3 flight hrs.

63/3-11

- 1 dent - RT - no crack
- 1 - RT - unidentified white line
- 1 - cracked rocking pin - MT
- 1 - balanced weight assembly too short

- Main Rotor Blade Problems
  - 8 UR
  - 4 cracked 1/2" to 8"
  - 2 - corrosion in blade tip
  - 1 - unauthorized repair - later failed
  - 1 - retention assembly cracked
- Landing Gear Problems
  - 8 UR
  - 4 eyebolts - cracked - MT
  - 2 axle trunion - cracked - one had 4 cracks - hard landing
  - 1 main member - cracked
  - 1 upper stay assembly
- Liquid Spring Problems
  - 8 UR
  - 7 cracked - stress corrosion cracking - maraging steel
  - 1 strike mark - 2 cracks
- Main Gearbox Problems
  - 5 UR
  - 1 - oil leak and crack - ET found only scratch
  - 1 - minor damage during shipping - NDI O.K.
  - 1 - key washer failed in flight - thump and chip light
  - 1 - lube pump bolt failure - incorrectly installed with 4 washers
  - 1 - 15 chip light indications in 60 days, all within limits - 16th chip light - bearing failure at a non-metallic inclusion

- Generator Housing Problem
  - 4 UR
  - 3 - 1 crack; 1 - 4 cracks
- Hoist Boom Assembly Problem
  - 3 UR
  - 1 had 5 cracks
- Miscellaneous Problems
  - 2 Engine mount fork assembly - fatigue
  - 2 Oil cooler blower - 1 cracked shroud - 1 support tee
  - 2 azimuth assembly
  - 2 blade crutch receptacle welds
  - 2 engine mount rod assembly - corroded and cracked
  - forward transmission rotor shaft - cracked
  - intermediate gearbox - mounting lug cracks
  - accessory drive strut support - crack
  - collective friction brake assembly - cracked sector shaft
  - rubber vibration insulators - rubber failure
  - A-blade rod assembly - crack - EI score mark
  - Droop stop block assembly - failed at tool mark
  - Lead - lag pin - crack - EI false indication
  - Fuel tank leak - crack - weld repair of previous crack
  - Nacelle door hinge assembly - crack - EI stress corrosion cracking

Models not analyzed:

H-3

H-46

H-53

63/3-13

GENERAL CONCLUSIONS

1. Lack of or improper NDI QA following manufacturing or depot rework procedures resulted in many instances of increased field maintenance requirements and costs.
   a. extended reinspection and verification at field level
   b. disassembly and repair or replacement of parts in field
   c. shipping cost of parts returned to depot for repair or engineering investigation
   d. downtime awaiting availability of spare parts
   e. cannibalization of other aircraft for spares
2. Repetitive use of improper or incorrect NDE procedures at field and other levels is worse than no NDE. It results in:
   a. a false sense of security/reliability;
   b. wasted funds for poor inspections;
   c. increased cost of later maintenance to repair or replace failed parts and sound parts damaged by failure;
   d. intangible and unacceptable cost of loss of life and limb resulting from failures.
3. Important trend data providing early identification of potential problems can be effectively derived by computer analysis of more detailed NDE function reports.

In order to affect appreciable cost savings in NDI procedures and to increase reliability in defect detection automated ultrasonic systems must continue to be developed. Reliability will be increased by decreasing dependence on human interaction for probe motion control and defect discrimination. Consideration for development of interfaces with existing traditional installations must be considered; modification of these would provide the quickest, least expensive method of accomplishing automation.

Special projects for developing interfaces with stand alone robots should be funded. Robotic assisted ultrasonic inspections systems (R.U.T.S.) would provide a means of incorporating automated part handling with automated inspection. At present these two computer compatible systems do not have a useable interface system.

SOFTWARE DEVELOPMENT

Development in the arena of automated NDI systems will continue since there is an economic incentive for equipment manufacturers to do so. However, these new developments are not coordinated and are progressing with no thought of standardization. Since a competitive environment must be maintained among equipment manufacturers the logical area for standardization is with discriminating software. Cost for software development often exceeds hardware expenditures, therefore a large opportunity exists for savings. Funding to develop a basic software package in assembler language would allow all future users to avoid the expenditure for development of unique software packages. A package for ultrasonic inspection is recommended as the first step.

63/3-15

NEUTRON RADIOGRAPHIC PROCESS

The extensive use of the X-Ray processes to industrial NDT applications is well developed and its continued adaptation to new requirements is expected to continue. That process has been highly successful in the examination of physical matter composed of the heavier elements particularly the metals used in much of the current hardware production.

The neutron radiographic process is relatively new. This process has the potential for inspection and testing of the newer materials, especially the composites that are being applied to critical items such as rotor blades and fuselage structural components. This process has been seriously limited by the requirement for an atomic source for the radiation energy. The handling, use and storage of these sources has required significant increased facility, personnel safety and process controls that have impacted the economics and effectively of this process. It has also been a very time consuming process (hours of radiation exposure required per radiograph).

This recommendation is to provide the investment funds to develop the recent N-Ray tube design (on-off N-Ray capability) into a practical system which would be essentially compatible with the X-Ray process that is so effectively being applied today. The N-Ray process does not compete with X-Ray applications. It fills a serious need in the materials evaluation for product quality, reliability and reduced maintenance.

63/3-16

EMBEDDED NDT SENSORS

The manufacturing and field reliability properties and the potential for significant in-process repeat inspections reductions is possible through the use of embedded acoustic sensors during initial component production. For example, the fabrication of a complex item (such as an all composite main rotor blade) involves the fabrication of several subassemblies which are then co-cured into the first product. The current practice is to NDT the subassemblies prior to the co-cure operation and then NDT the finished assembly.

Embedded acoustic sensors will permit the monitoring of the final co-cure operation at the subassembly level and provide a basis for reduced or complete elimination of repeated inspections of the finished product thereby significantly increasing the production rate and reducing the total assembly cost.

Furthermore, the embedded sensors (which could be acoustic or other types) could be used as an operational monitor to record in-flight events and could be used by the field depot personnel for maintenance diagnostic processes. All of this enhances the reliability, maintainability and safety of critical, high dollar aircraft components.

63/3-17

SUMMARY:

It has been shown that the present needs relating to NDE/reliability primarily deal with field operations. Maintenance programs must be improved by providing modern equipment and--more important--trained personnel for performance of NDE procedures. The coordination of maintenance NDE requirements by the armed services would also be of great value. Contractors would thereby provide needed technical instruction in a given format modified only for specific mission requirements. Uniformity would allow the contractor to consider maintenance manuals as a normal business requirement regardless of the service involved.

In order to be prepared for the 1990s, serious development effort must be expended in automated/computerized NDE systems. Reducing the dependency on repetitive human motion and discrimination will increase detection reliability by an order of magnitude. Also, to make computerization a more affordable reality, the problems of software development must be overcome; t the very least, standards in language and format need to be established.

The need to detect bonds with less than design strength in composite structures will require technology development. No method is now available for this inspection. Embedding acoustic sensors in a composite structure during manufacturing and using these devices to determine soundness/strength of bond have a high probability of providing bond strength data. These devices would remain in the manufacturing component, and by being attached to an on-board minicomputer could easily monitor their in-flight condition, eliminating periodic NDE at intermediate and/or depot levels.

In summary, funding programs now for the solution of present problems and for the development of new technology will provide mission-ready, reliable systems at affordable prices.

6.105-Finn-2

TASK GROUP: ROTARY-WING AIRCRAFT

RECOMMENDATIONS	TARGET PROGRAM	FOR USE IN	GATEKEEPER & ACTION REQUIRED	COST & TIME REQUIRED TO IMPLEMENT	READINESS IMPACT (ROI)
Incorporate automated ultrasonic inspection of composite structures and components	UH-60 AH-64 JVX LHX	Production, Depot	DARCOM Blackhawk PM AAH PM	$1M-2M	100% inspection of critical areas Cost of repair ↓ (10%) Cost avoidance: ↓ Spares (15%) ↓ Manpower (5%) ↑ Operational readiness (10%)
Automated NDT software	All programs	Production, Depot		$1M	↓ Cost reduction (20%)
Develop N-Ray tube system for real time composite structure inspection	AH-64 JVX LHX		DARCOM AAH PM	$1-5M	Cost avoidance: ↓ Spares (15%) ↓ Manpower (5%) Cost of repair ↓ (10%)
Embedded acoustic sensors	All helicopter rotor blades	Field	DARCOM (AVSCOM) Blackhawk PM Seahawk PM Nighthawk PM	$1-5M	↑ Operational readiness Cost avoidance: ↓ Spares (10%) ↓ Manpower (20%)
Computerized trend analysis of maintenance NDI applications	UH-60 AH-64 JVX LHX	Design, Program Management	DARCOM AAH PM	$1-5M	Cost avoidance (30%) ↑ Operational readiness ↓ Spare parts (30%)

59/14-1

TASK GROUP
ON
NDE IN SHIPS

(THIS SECTION, PAGES IV-179 THROUGH IV-291 IS PUBLISHED UNDER SEPARATE COVER AS AN ANNEX TO IDA RECORD DOCUMENT D-37, DUE TO DISSEMINATION RESTRICTIONS.

TASK GROUP ON NDE IN ARMAMENTS IV. A. 5

IV. A. 5 TASK GROUP IN NDE IN ARMAMENTS

The Product Assurance Directorate at ARRADCOM deals with product quality reliability and maintainability throughout the life cycle of an armament system. The philosophy motivating the organization is to develop quality plans that give the highest probability of preventing critical/major defects from reaching the stockpile and to provide real-time quality assessment of the process at minimum costs. To accomplish this, PAD attempts to eliminate human interpretation by automating the inspection process combined with the utilization of the most effective inspection techniques. In support of these objectives, PAD has developed a large Manufacturing Methods Technology Program to develop and implement these automated services for the whole gamut of Army armament systems.

The automation of an inspection system can be broken up into several stages including the primary testing method, primary data, data conversion, data enhancement, data analysis, decision-making and final action. Once these stages have been completed, the automated system can be incorporated into a completely automated production process that spans the life cycle of the item from initial production to final ballistic acceptance testing. These automated systems provide potential feedback loops that monitor the process parameters continuously and keep them within tolerance. With greater inspection reliability and closer process control, rework and scrap costs can be minimized.

As examples of how PAD is attempting to implement this philosophy throughout the life cycle we have:

1. SCAMP - Automated Inspection of the 5.56 mm cartridge case.

2. Magnetic Flux Leakage - Automated Material Parts Inspection for the M483A2.

3. Dynagun Ballistic Simulator - Acceptance Testing of Propellent with Potential Automated Feedback into the Process.

6.107

4. Automated X ray Inspection System (Axis) - Automated X ray Filament In-process and Large Caliber Shell.

5. Automated Inspection Devices for Explosive Charge in Shell (AIDECS) - Automated Filmless Inspection of High Explosive Fill and Large Caliber Ammunition.

6. Application of Radar Ballistic Acceptance Testing of Ammunition (ARBAT) - Automated Radar Tracking of Multiple Gun Sites for Final Ballistic Acceptance Testing.

Experience with developing systems such as those listed above indicate that certain areas must be actively pursued in the future. These areas are:

1. Enhanceing Signal Conditioning.
2. Development of Enhanced Data Processing Techniques.
3. Utilization of New Promising Emerging Techniques.
4. Coupling Emerging Techniques to Robotic Devices.
5. Quantitative Characterization of Process Parameters.

6.108



US ARMY ARMAMENT RESEARCH AND DEVELOPMENT COMMAND

DOVER, NEW JERSEY

PRODUCT ASSURANCE DIRECTORATE

U.S. ARMY
ARMAMENT RESEARCH & DEVELOPMENT COMMAND

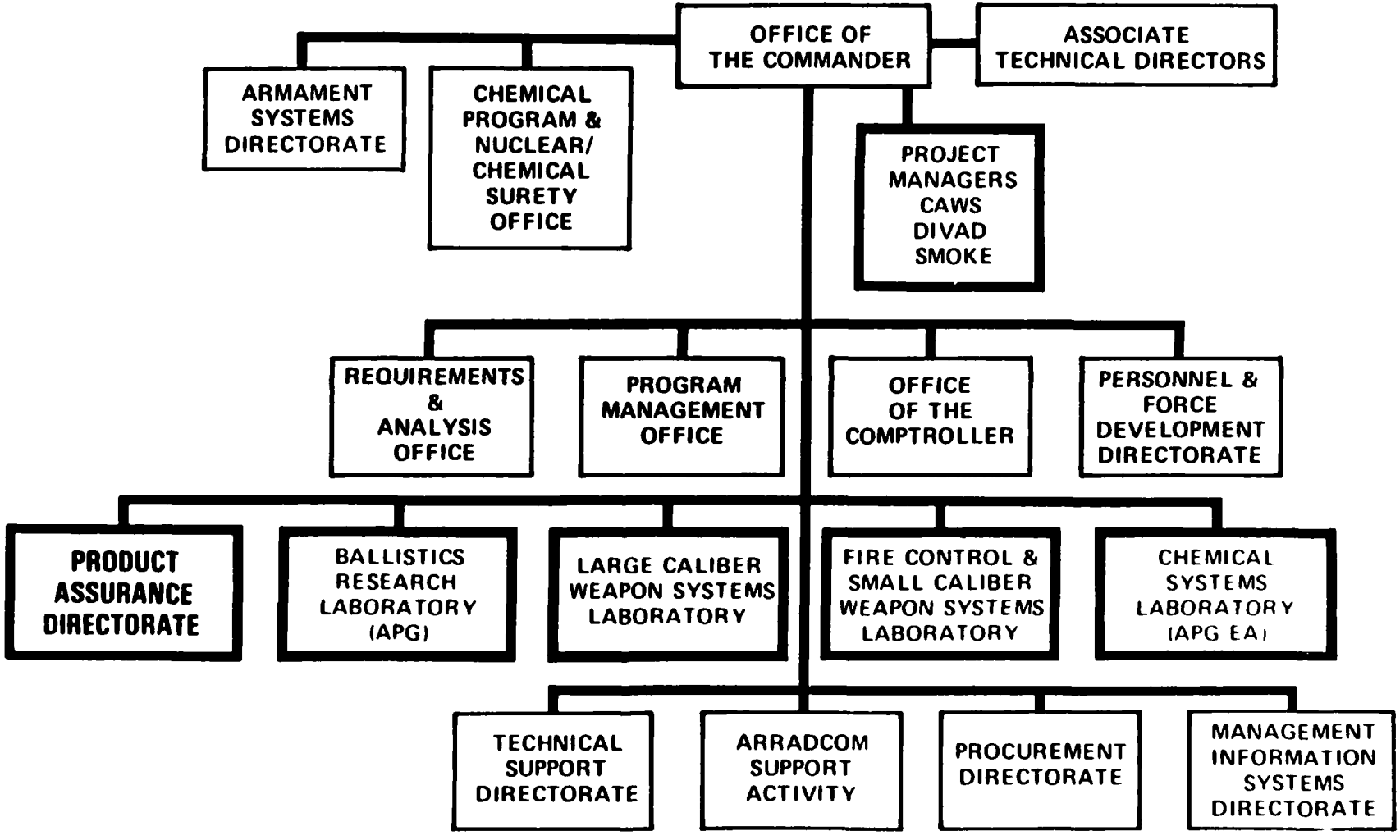

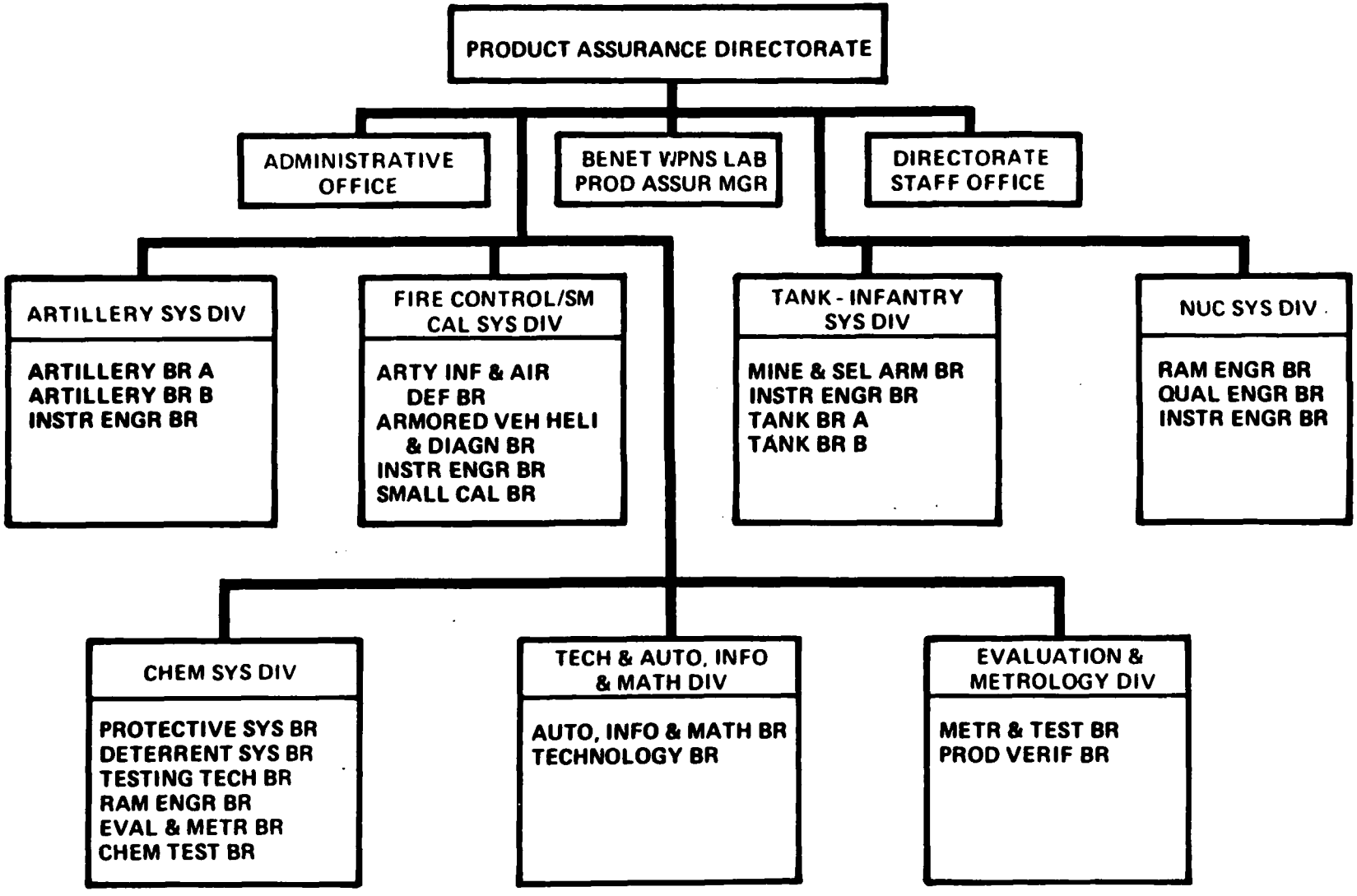
PRODUCT ASSURANCE DIRECTORATE
ADMINISTRATIVE OFFICE
BENET W/PNS LAB PROD ASSUR MGR
DIRECTORATE STAFF OFFICE
ARTILLERY SYS DIV
ARTILLERY BR A
ARTILLERY BR B
INSTR ENGR BR
FIRE CONTROL/SMALL CAL SYS DIV
ARTY INF & AIR DEF BR
ARMORED VEH HELI & DIAGN BR
INSTR ENGR BR
SMALL CAL BR
TANK - INFANTRY SYS DIV
MINE & SEL ARM BR
INSTR ENGR BR
TANK BR A
TANK BR B
NUC SYS DIV
RAM ENGR BR
QUAL ENGR BR
INSTR ENGR BR
CHEM SYS DIV
PROTECTIVE SYS BR
DETERRENT SYS BR
TESTING TECH BR
RAM ENGR BR
EVAL & METR BR
CHEM TEST BR
TECH & AUTO, INFO & MATH DIV
AUTO, INFO & MATH BR
TECHNOLOGY BR
EVALUATION & METROLOGY DIV
METR & TEST BR
PROD VERIF BR

PROJECT LIFE CYCLE TASKS
(ARRADCOM MAJOR RESPONSIBILITY)

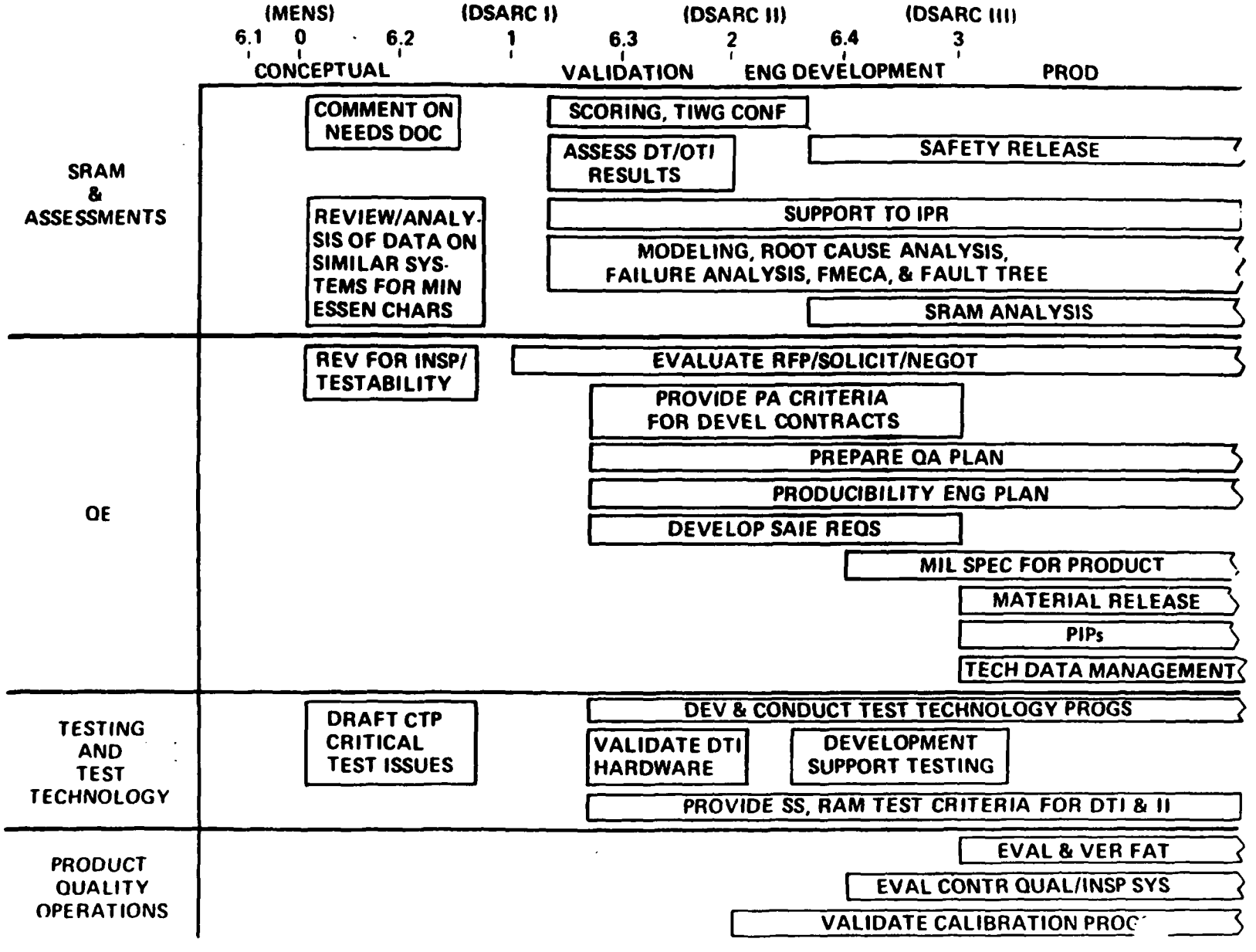

PHILOSOPHY

SYSTEM/ITEM

DEVELOP A QUALITY PLAN THAT HAS THE HIGHEST PROBABILITY OF PREVENTING CRITICAL/MAJOR DEFECTS FROM REACHING THE STOCKPILE BY ELIMINATING HUMAN INTERPRETATION AND UTILIZING THE MOST EFFECTIVE STATE-OF-THE-ART INSPECTION TECHNIQUES

PRODUCTION PROCESS

TO PROVIDE ADEQUATE AND REAL-TIME QUALITY ASSESSMENT OF THE PROCESS AT A MINIMUM COST

OBJECTIVES

DEVELOPMENT OF TESTING TECHNOLOGY THROUGH ITEM SUPPORT

REDUCE COST OF INSPECTION PER ITEM

REDUCE START-UP DELAYS

REDUCE HOLDING AREA REQUIREMENTS

REDUCE PERSONNEL EXPOSURE IN HAZARDOUS OPERATIONS

MINIMIZE INSPECTION LIMITING PRODUCTION RATES

PREVENT COMPROMISE OF ITEM SAFETY, RELIABILITY, INTERCHANGEABILITY

ELIMINATE HUMAN ERROR BY AUTOMATION

PAD MMT EFFORTS

IN AUTOMATED NON- DESTRUCTIVE TESTING

AMMUNITION PROGRAMS

AUTOMATED NON-DESTRUCTIVE TESTING OF COMBUSTIBLE CARTRIDGE CASES
AUTOMATED LINE-PROCESS INSPECTION OF NEW EED'S ALPINE
AUTOMATED LEAK DETECTION OF WHITE PHOSPHOROUS MUNITIONS
DIGITAL IMAGE AMPLIFICATION X-RAY SYSTEM (DIAX)
AUTOMATED NON-DESTRUCTIVE INSPECTION OF STICK PROPELLANT
SMALL CALIBER AUTOMATIC NON-DESTRUCTIVE TEST (SCANT)
AUTOMATIC NON-DESTRUCTIVE DENSITY DETERMINATION OF EXPLOSIVE PROJECTILES (ANDDEP)
AUTOMATIC INSPECTION FOR FIBERGLASS CONTENT
AUTOMATIC INSPECTION FOR ROTATING BAND CHEMISTRY
AUTOMATED INSPECTION DEVICE FOR EXPLOSIVE CHARGE IN SHELL (AIDECS)
AUTOMATIC X-RAY INSPECTION SYSTEM (AXIS)
NON-DESTRUCTIVE TEST EQUIPMENT FOR LARGE CALIBER MUNITION FOR M483A1. METAL BODY

PAD MTT EFFORTS

IN AUTOMATED NON-DESTRUCTIVE TESTING

AMMUNITION PROGRAMS

PROPELLANT SURVEILLANCE TEST

MAGNETIC FLUX LEAKAGE INSPECTION OF M42/M46 GRENADE

OTHER

AEROSOL TEST APPARATUS FOR BIOLOGICAL DETECTOR AND WARNING SYSTEM

QUALITY ASSURANCE OF COMPUTERIZED INSPECTION EQUIPMENT SOFTWARE

BRIEFING OUTLINE

- INTRODUCTION
- A SYSTEM'S APPROACH TO AUTOMATED NDT
- SUMMARY
- RECOMMENDATION

PAD MMT EFFORTS

IN AUTOMATED NON-DESTRUCTIVE TESTING

(CONTINUED)

WEAPONS PROGRAMS

STANDARDS FOR DIAMOND TURNED OPTICAL PARTS

ROBOTIC EMPLACEMENT DEVICE FOR INSPECTION BY X-RAY (REDIX)

OTHER

AUTOMATED AGENT PERMEATION TESTER

MODERNIZED CHARCOAL FILTER TEST EQUIPMENT

AUTOMATIC MULTIPLE FILTER TEST EQUIPMENT

MODERNIZATION OF FILTERED PENETRATION EQUIPMENT

SYSTEM APPROACH TO PROJECTILE TESTING

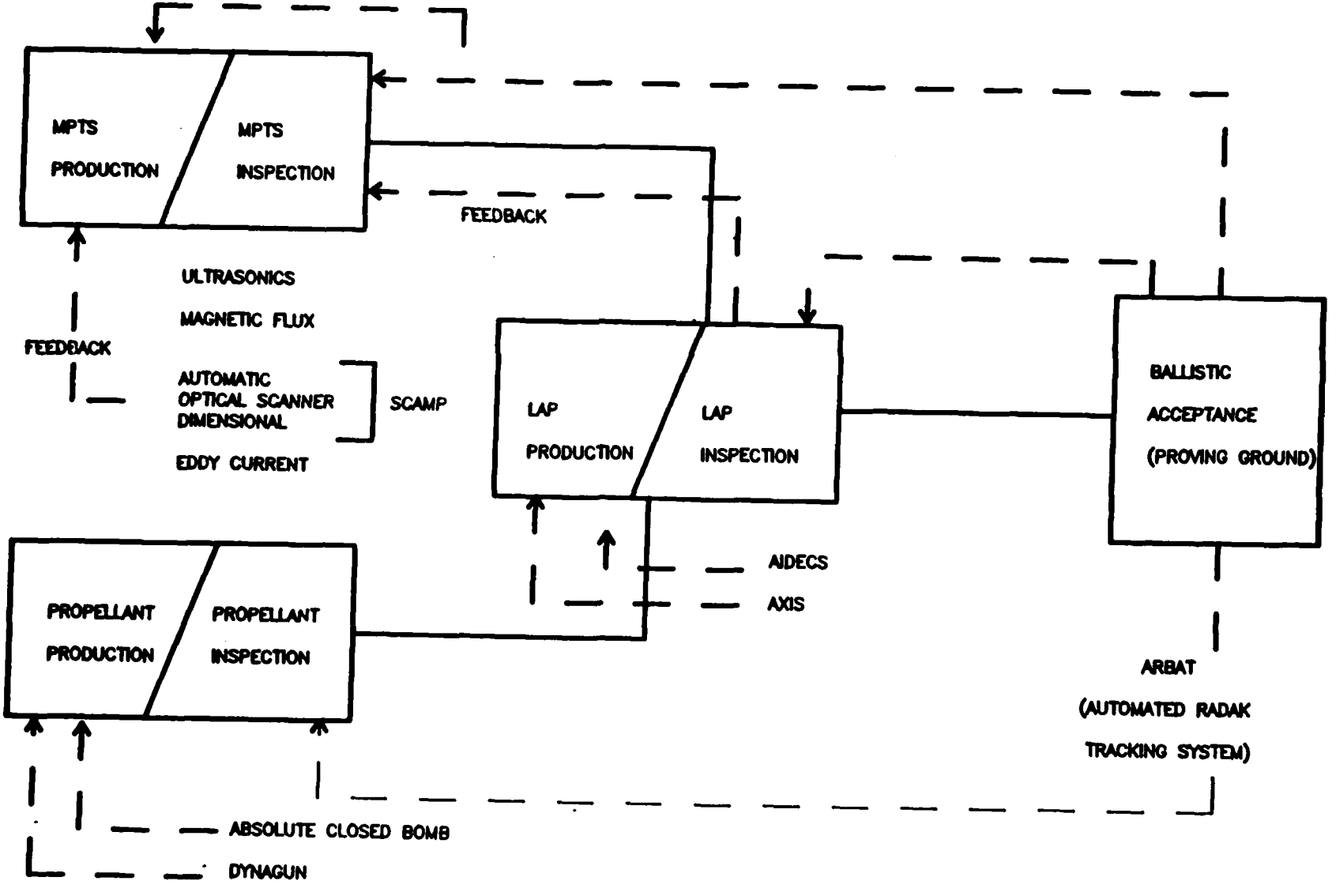

A SYSTEMS APPROACH TO AUTOMATED INSPECTION

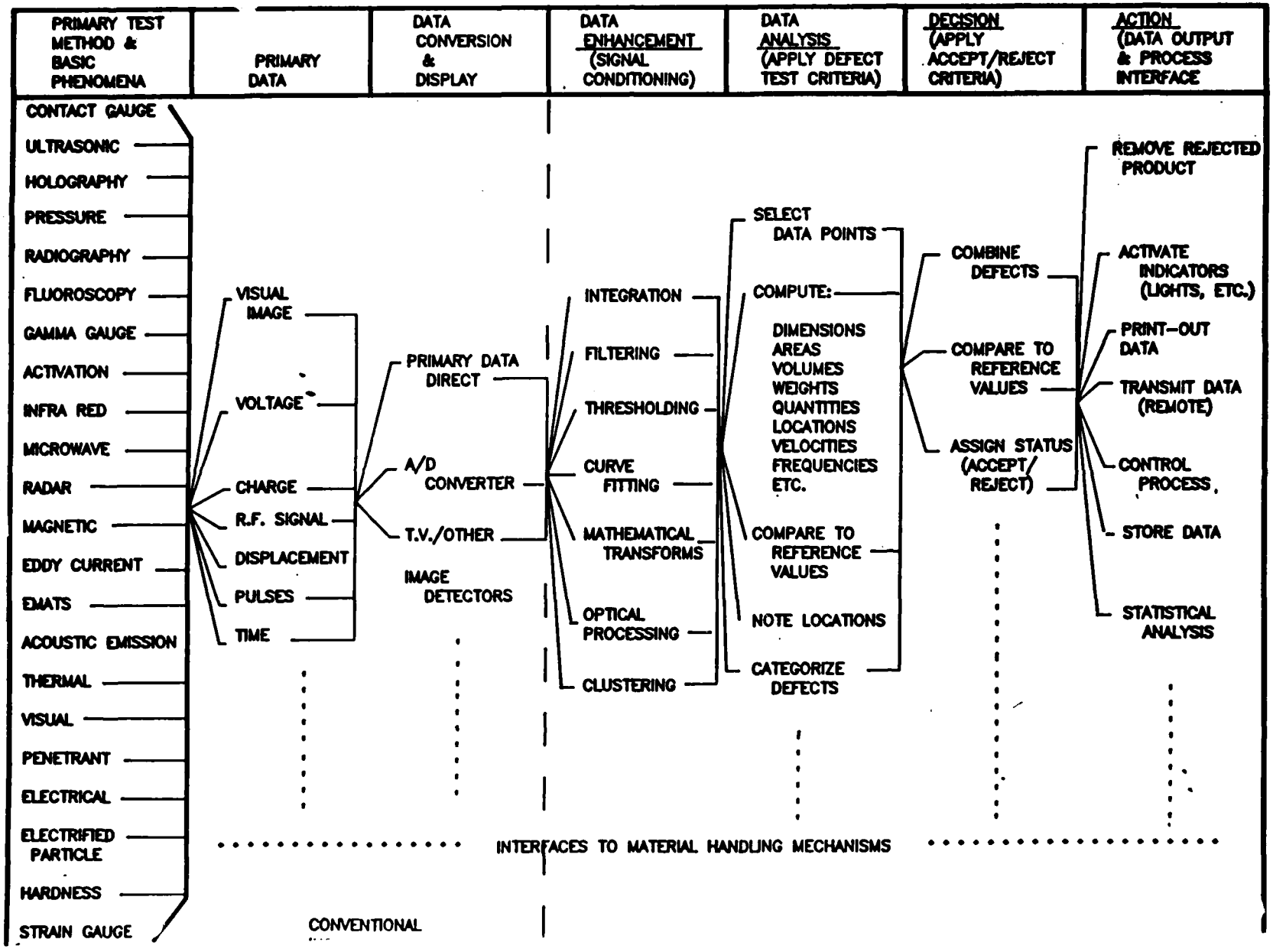

PRINCIPLES OF MAGNETIC FLUX LEAKAGE INSPECTION

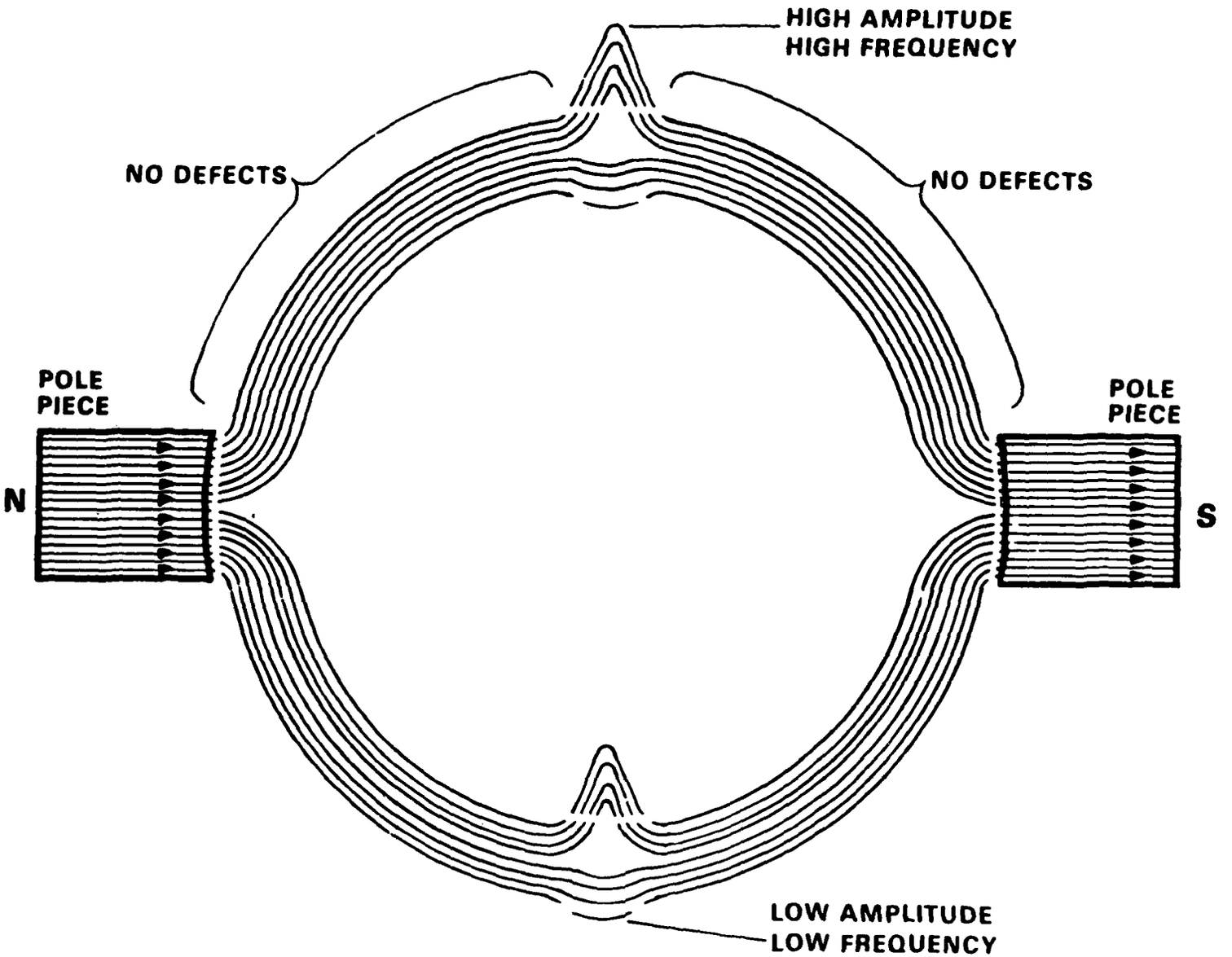

ADVANTAGES OF MAG FLUX LEAKAGE

PARTICLE BATH NOT REQUIRED

MEASUREMENTS ARE QUANTIFIABLE

TECHNIQUE SENSITIVE TO SUB-SURFACE DEFECTS

CARTRIDGE CASE MEASUREMENT/EJECT SYSTEM CAPABILITY (RATE 1200 PARTS PER MINUTE)

- BASIC INSPECTION MACHINE (5.56 mm)

  PROFILE
  SURFACE FLAW
  EDDY CURRENT FLAW (MOUTH)
  OPERATES WITH CASE PRODUCTION MACHINERY

- EDDY CURRENT METAL INTEGRITY MONITOR
- BULKFEED CASES
- QUICK CHANGE TO HANDLE 7.62 mm CASES

DYNAGUN BALLISTIC SIMULATOR

OBJECTIVES

TO ASSESS THE UNIFORMITY OF MANUFACTURED PROPELLANT WITH A PRECISION GREATER THAN THAT OF THE CLOSED BOMB

TO DETERMINE CHARGE LOADING FOR FIRING ZONES AS PRESENTLY DONE AT THE PROVING GROUNDS

DETAIL OF ALPHA DYNAGUN

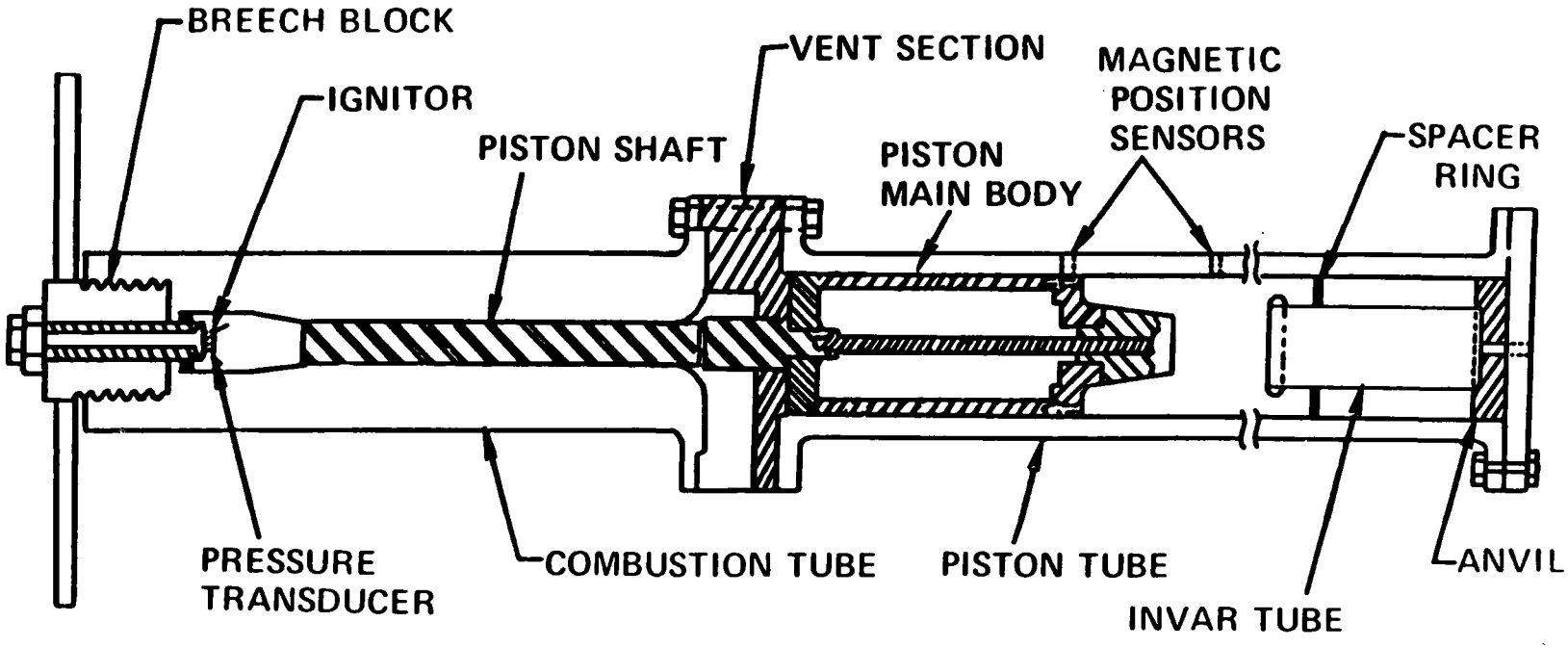

ARBAT

Application of Radar to Ballistic Acceptance Testing of Ammunition

OPERATIONAL SYSTEM DEPLOYMENT

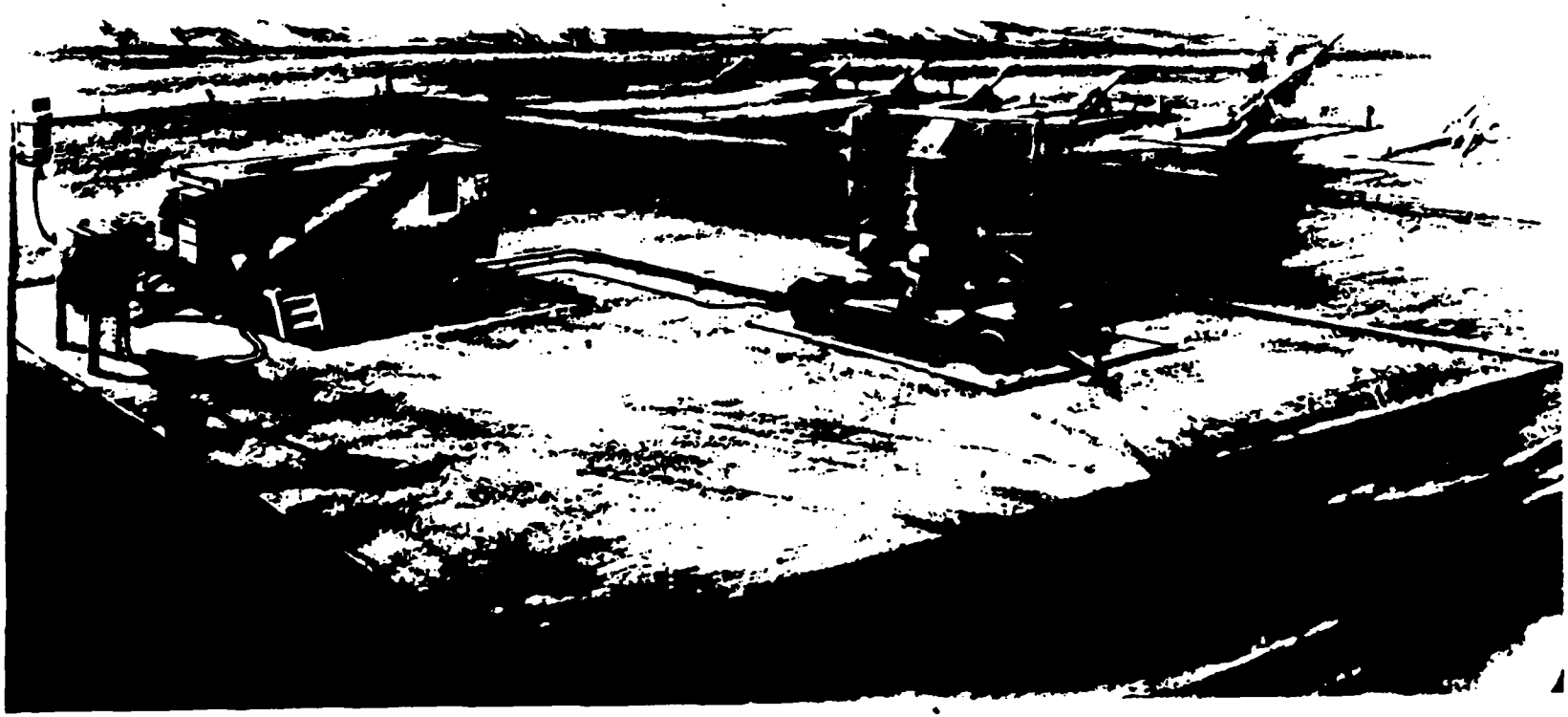

SUMMARY OF PERFORMANCE CHARACTERISTICS

TRACK (LAUNCH TO IMPACT) - WIDE WEAPON VARIETY

MORTAR (60 AND 81 mm)/2.75 in.; ROCKETS;
40 mm, 76 mm, 90 mm, 105 mm, 155 mm, 175 mm, 8 in. PROJECTILES

TRAJECTORY PARAMETERS

POSITION - WEAPON COORDINATES (X, Y, Z)
VELOCITY -
RADAR CROSS SECTION
EVENTS - PARTS SEPARATION, IGNITION, DECELL., ETC

RANGE

500m TO 15 km (-40 dBSM)
TO 50 km (LARGER TGTS)

ACCURACY

RANGE	- LARGER OF 2 METERS OR 0.05% RANGE
VELOCITY	- 1m/sec
AZ/ELEV	- 2 MILLIRADIANS
RCS	- 2 dB

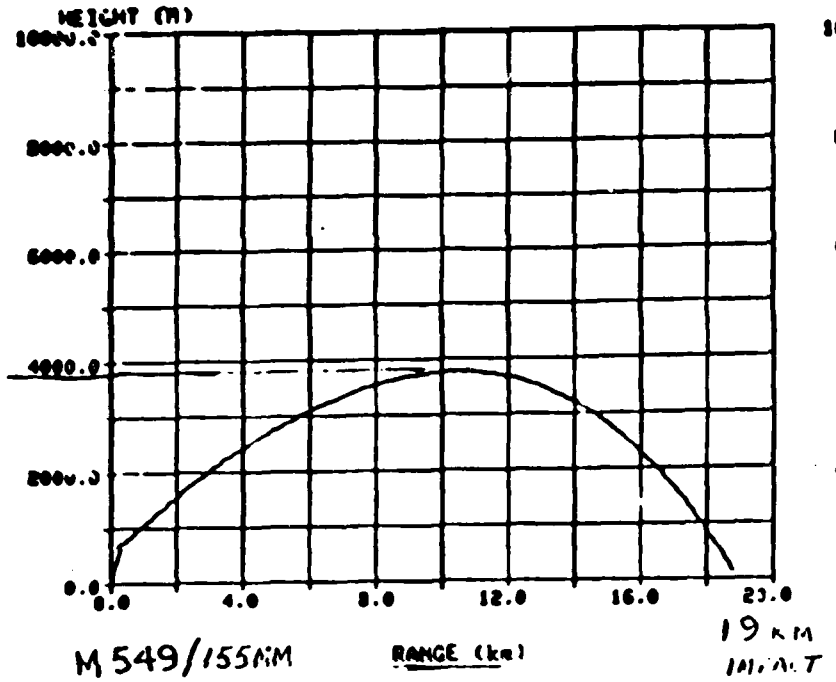

M 549/155MM

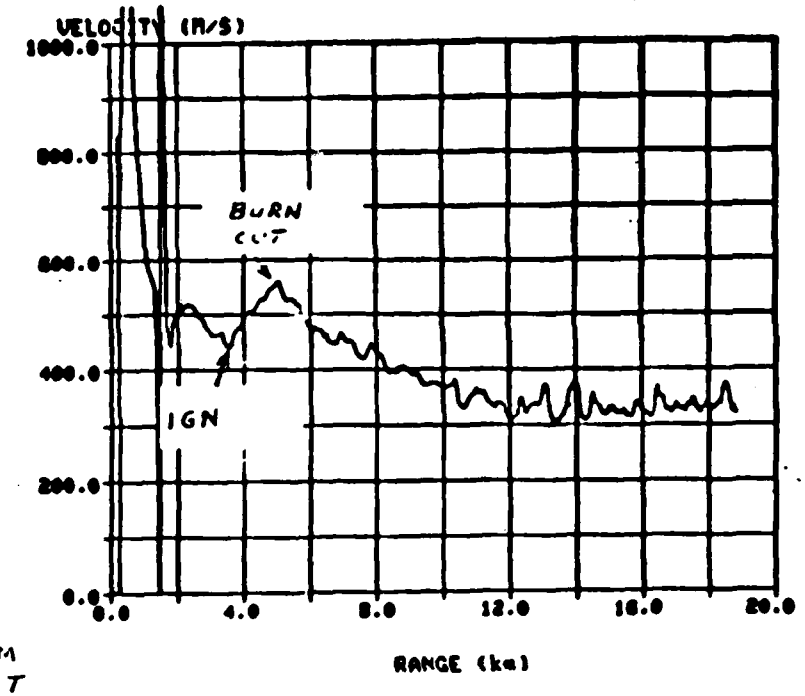

TITLE	:XM 785	Range	:___18.94
DATE	:11/19/81	Height	:___61.83
Track No	:_____373	Velocity	:__343.68
Launch t	:14:11:_2	Servo	:___11.60
Dwnrange	:_____.00	Time	:14:11:59
Xrsrange	:_____.00	Elapsed t	:_____57.
Height	:_____.00		

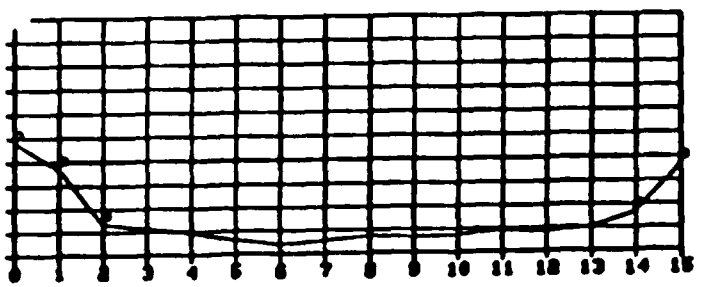

G.P.#3 - L&F 82°/QE 533 3

ARBAT/DATA
REAL TIME DISPLAY

INPUT ^D PLUS CONTROL

EVENT DATA PRINTOUTS

RAP WITH IGNITION, BURNOUT

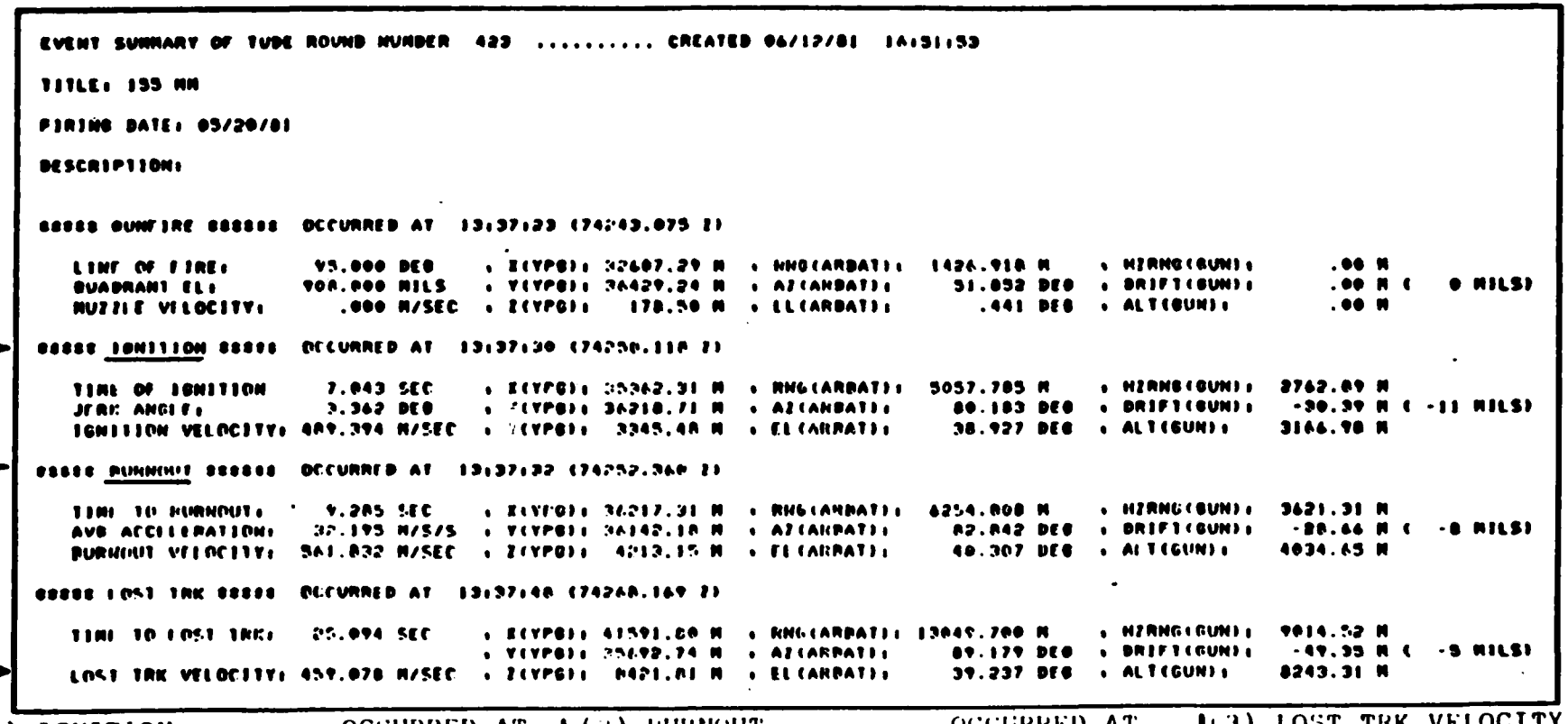

```
EVENT SUMMARY OF TUBE ROUND NUMBER  423  .......... CREATED 06/12/81  16:51:53

TITLE: 155 MM

FIRING DATE: 05/20/81

DESCRIPTION:

***** GUNFIRE ******  OCCURRED AT  13:37:23 (74243.075 Z)

   LINE OF FIRE:        95.000 DEG    , X(YPG): 32607.29 M  , RNG(ARBAT):  1426.918 M    , HZRNG(GUN):      .00 M
   QUADRANT EL:        908.000 MILS   , Y(YPG): 36429.24 M  , AZ(ARBAT):     51.852 DEG  , DRIFT(GUN):      .00 M (   0 MILS)
   MUZZLE VELOCITY:       .000 M/SEC  , Z(YPG):   178.50 M  , EL(ARBAT):       .441 DEG  , ALT(GUN):        .00 M

1)→ ***** IGNITION *****  OCCURRED AT  13:37:30 (74250.118 Z)

   TIME OF IGNITION      7.043 SEC    , X(YPG): 35362.31 M  , RNG(ARBAT):  5057.785 M    , HZRNG(GUN):  2762.89 M
   JERK ANGLE:           3.362 DEG    , Y(YPG): 36218.71 M  , AZ(ARBAT):     80.183 DEG  , DRIFT(GUN):   -30.39 M ( -11 MILS)
   IGNITION VELOCITY: 489.394 M/SEC   , Z(YPG):  3345.48 M  , EL(ARBAT):     38.927 DEG  , ALT(GUN):    3166.98 M

2)→ ***** BURNOUT ******  OCCURRED AT  13:37:32 (74252.360 Z)

   TIME TO BURNOUT:      9.285 SEC    , X(YPG): 36217.31 M  , RNG(ARBAT):  6254.808 M    , HZRNG(GUN):  3621.31 M
   AVG ACCELERATION:    32.195 M/S/S  , Y(YPG): 36142.18 M  , AZ(ARBAT):     82.842 DEG  , DRIFT(GUN):   -28.66 M (  -8 MILS)
   BURNOUT VELOCITY:   561.832 M/SEC  , Z(YPG):  4213.15 M  , EL(ARBAT):     40.307 DEG  , ALT(GUN):    4034.65 M

***** LOST TRK *****  OCCURRED AT  13:37:40 (74268.169 Z)

   TIME TO LOST TRK:    25.094 SEC    , X(YPG): 41591.80 M  , RNG(ARBAT): 13049.700 M    , HZRNG(GUN):  9014.52 M
                                      , Y(YPG): 35692.74 M  , AZ(ARBAT):     89.179 DEG  , DRIFT(GUN):   -49.35 M (  -5 MILS)
3)→ LOST TRK VELOCITY: 459.078 M/SEC  , Z(YPG):  8421.81 M  , EL(ARBAT):     39.237 DEG  , ALT(GUN):    8243.31 M
```

(1) IGNITION	OCCURRED AT	(2) BURNOUT	OCCURRED AT	(3) LOST TRK VELOCITY:
TIME OF IGNITION	7.043 sec	TIME TO BURNOUT	9.285 sec	(14 Km) 459.078 M/s
IGNITION VELOCITY	489.394 M/Sec	AVG ACCELERATION	32.195 M/sec^2	
		BURNOUT VELOCITY	561.832 M/sec	

FUTURE THRUSTS

- ENHANCED SIGNAL CONDITIONING
- DEVELOPMENT OF MORE ADVANCED DATA ANALYSIS TECHNIQUES
- UTILIZATION OF OTHER NDT IMAGING TECHNIQUES SUCH AS NMR IMAGING, POSITRON ANNIHILATION ANALYSIS, NEUTRON ACTIVATION ANALYSIS, THERMOGRAPHY, THERMAL WAVE INSPECTION, ETC.
- COUPLING IMAGING SYSTEMS TO ROBOTIC DEVICES
- CHARACTERIZATION OF PROCESS PARAMETERS

SUMMARY

- AUTOMATING TESTING REDUCES BACKLOGS ON MODERN PRODUCTION LINES (SCAMP)
- PRODUCES DATA UNAVAILABLE PREVIOUSLY THAT MAY BE USED FOR BOTH ACCEPTANCE TESTING AND PROCESS CONTROL (AIDECS, ARBAT, ETC.)
- GIVES CONSISTENT SPECIFICATION INTERPRETATION
- ALLOWS FOR THE PRODUCTION OF HIGHER QUALITY MATERIAL
- AUTOMATED TESTING IS SUPPORTED BY PRODUCERS
- AUTOMATED TESTING IS COST EFFECTIVE ON A LONG TERM BASIS

SUMMARY

Modern automated lines will need automated inspection systems to reduce backlogs. The data produced, heretofore, unavailable, can be used as process control information as well as acceptance testing. Automated inspection systems, because of the necessity for quantitative analysis, are more consistent than the present methods. The automated testing approach is cost-effective and leads to the production of higher quality material.

Although support for developing inspection systems directly related to end items has been forthcoming, many programs are generic in nature and can be applied to many different systems. These generic approaches such as those listed above should be developed within an R&D program.

6.108

TASK GROUP: DEVELOPING AND EMERGING NDE

RECOMMENDATIONS	TARGET PROGRAM	FOR USE IN	GATEKEEPER & ACTION REQUIRED	COST & TIME REQUIRED TO IMPLEMENT	READINESS IMPACT (ROI)
Develop Automated Real-Time X-Ray Inspection System for Mortar Warheads	4.2 in and 81 mm mortars	Production	DARCOM	Medium ($1.9M)	$438,000 savings/yr (14%)
Develop Image Processing Techniques for Use in Automated NDE Systems (Computer Techniques)	All NDE Applications	Production	DARCOM	Medium	Reduction in costs for development of automated NDE systems. Estimated $120,000/yr savings
Develop Automatic Compton Scattering Inspection System	Large Caliber Munitions	Production	DARCOM	Medium	Cost & hazard avoidance One reduced Gov. Liability ($1,000,000 settlement). Reduction in cost of inspection by $325,000/yr.
Develop Photothermal Imaging for Coating Inspection	All Coatings	Production	NAVY	Low	Cost savings hard to assess
Develop NMR Imaging Devices	Track Pad Rubber, Bare Charge such as Navy Breaker 5" - 54	Production	DARCOM NAVSEA	Medium	Reduction in cost due to removal of film. Reduction in spare parts requirements. Avoidance of failure

IV. B. NDT DATA BASE

There are many methods of providing failure or unsatisfactory service information back to the Element Manager during the prototype or production phase of the procured system. These methods are listed in Attachment A. Although their prime purpose is not for supplying NDT data, that is a useful by-product. From this data it may be determined if NDT methods were properly utilized. This method of assuring NDT applications while seemingly effective, does not provide complete assurance that the NDT program has been thoughtfully administered. There is a specific exception to this preceding statement and that is parts deemed fatigue-fracture critical under MIL-STD-1530 (Aircraft Structural Integrity Program, Airplane Requirements) and MIL-A-83444 (Airplane Damage Tolerance Requirements). Those parts require critical review by the Designer and NDT Level III for the NDT method and when applied during the manufacturing or assembly operations. In addition, these specifications assure the NDT method is capable of detecting defects of a critical size.

The question "is the correct NDT method applied at the proper time during the manufacturing cycle" was addressed. There are cost drivers such as cost of the NDT method and schedule that enter into the decision, but generally, the application and timing are acceptable. The use of sampling methods and acceptance by "certificate of compliance" introduce probability of defective materials, but these risks are mathematically understood and are required because of cost constraints.

There is a program for Corrosion Control that was imposed on the F-16 Weapon System as a Data requirement. Although this program has no relationship to NDT, the principle is worthy of application. Under this Data item a Corrosion Control Board was established to review types of corrosion-resistant finishes, methods and time of application, repair methods, etc. Once the corrosion-resistant system was established any changes must receive prior approval by this Board. The membership of the Board is composed of Air Force Corrosion Prevention and Control Advisory Board (F-16 SPO Chairman, AFWAL, ALC, AFPRO), Prime Contractor, Materials Technology (Chairman), Liaison Engineering, Quality Assurance, Manufacturing Engineering and Process Control. This same philosophy would be transferable to an NDT Board with the resulting assurance that NDT was properly administered through the design and production of weapon systems. MIL-I-6870 (Inspection Program Requirements, Nondestructive for Aircraft and Missile Materials and Parts) fosters the same concept in a NDI Technical Requirements Review Board, but it has not been implemented or accepted to the same degree as the Corrosion Control Board. Even though these specifications are written, by title, for aircraft, there is no reason they could not be applied to any type weapon system.

The application of NDT methods to delivered (in-service) products are largely through handbook or T.O. (Technical Order) requirements. In addition, NDT is often used as a result of maintenance functions. Results of these inspections are made available through the 66-1 (Field Service Maintenance Events Data) System. This data is available to the Element Manager for his review and analysis. Attachment A lists several methods by which NDT data is available to the Element Manager, however, the prime source is 66-1. However, there are several problems associated

with this 66-1 data. Completeness is of prime consideration because low dollar or easily repairable items may be corrected without entry into the system. Timely entry of data into the system, large number of defect codes, verification of defect or, in case of electronic equipment, could not duplicate are all areas that reduce the usability of this data. If equipment is returned to a vendor or depot for repair, then generally cause data is lost to the 66-1 data system. However, a greater impediment is the lack of any data reduction, trend analysis or use of the 66-1 data to recognize and correct problems at an early date. This indictment can be directed at both the user, SPO or ALC, and the prime contractor. There are two additional constraints that must be recognized in data reduction and use. One is its cost, and the second is who has the responsibility, i.e., User, SPO, Prime Contractor? Along with that responsibility how well will the recommendations/ directives from the data analysis be received and implemented?

An analysis was made of the 66-1 data on a high technology material graphite-composite parts or assemblies on a present Weapon System (Attachment B). The summary of that data shows a large number (33) of cause codes. It is not possible to determine if any of the discrepancies were concerned with NDI or resulted because of NDI. The data does indicate 4 cause codes that warrant investigation and possible corrective action. A conclusion that may be drawn from this example is that even though the data may not be as complete and accurate as desired, it still could be used to isolate and correct user problems if trend analysis and data reduction principles were applied by the Element Managers.

RECOMMENDATIONS

1. Establish an NDI Board similar to and empowered like the Corrosion Control Board.
2. Improve the 66-1 Data System and apply to major Weapon Systems.
3. Require Trend analysis of Data with subsequent Corrective action for early detection and resolution of user problems.

PROTOTYPE OR NEW SYSTEM

- QUALIFICATION TEST
- RQT/RAT (RELIABILITY QUALIFICATION TEST/RELIABILITY ACCEPTANCE TEST)
- FATIGUE TEST
- STATIC TEST
- EMI (ELECTRO MAGNETIC INTERFERENCE)
- LIGHTENING STRIKE
- NUCLEAR HARDNESS
- RADAR PROFILE - SIGNATURE - CROSS SECTION
- DAMAGE TOLERANCE - FATIGUE/FRACTURE CRITICAL (MIL-A-83444 AIRPLANE DAMAGE TOLERANCE REQUIREMENTS)

PROTOTYPE OR NEW SYSTEM (CONT'D)

- SYSTEMS INTEGRATION
  - •• SYSTEM LEVEL
  - •• AIRCRAFT LEVEL
- SOFTWARE COMPATIBILITY
  - •• LRU (LINE REPLACEABLE UNIT)
  - •• SYSTEM
  - •• AIRCRAFT
  - •• SUPPORT EQUIPMENT
  - •• MANUFACTURING EQUIPMENT

PRODUCTION - WORK IN PROCESS

- IMPLEMENTATION OF CONTRACT SPECIFICATIONS PROVIDES "IN-HOUSE" DATA/INFORMATION FOR DETECTION CORRECTION OF PROBLEMS

  - MIL-Q-9858 QUALITY PROGRAM REQUIREMENTS
  - MIL-I-45208 INSPECTION SYSTEM REQUIREMENTS
  - MIL-STD-1535 SUPPLIER QUALITY ASSURANCE PROGRAM REQUIREMENTS
  - MIL-STD-1520 CORRECTIVE ACTION AND DISPOSITION SYSTEM FOR NONCONFORMING MATERIAL
  - MIL-STD-480 CONFIGURATION CONTROL ENGINEERING CHANGES, DEVIATIONS AND WAIVERS

PRE-DELIVERY OR IN WARRANTY PRODUCTS

- DEVIATION
- WAIVER
- NOTICE-OF-DEFICIENCY

DELIVERED PRODUCTS

- USER GENERATED MAINTENANCE DATA SYSTEM (66-1)
- CANNIBALIZATION REPORT
- SAFETY REPORTS
- SERVICE REPORTS (EXHIBITS)
- SPO (SYSTEMS PROJECT OFFICE) OR ALC (AIR LOGISTICS CENTER INQUIRY

ADMINISTRATIVE PROGRAMS

- SUPPORTABILITY CONFERENCE
- TECHNICAL SERVICE REPRESENTATIVES
- SPARES PROVISIONING
- M.I.S. (MANAGEMENT INFORMATION SYSTEMS) PROGRAMS TO DISSEMINATE DATA
  - DATA REDUCTION
  - TREND ANALYSIS

CONCLUSIONS

- FAILURE/PROBLEM DATA IS AVAILABLE TO THE ELEMENT MANAGER
- MAINTENANCE DATA (66-1) MAY NOT BE AS DEFINITIVE AND TIMELY AS DESIRED, BUT IT IS SUITABLE FOR ELEMENT MANAGER USE
- DATA REDUCTION AND TREND ANALYSIS OF DELIVERED PRODUCT IS AVAILABLE ON REQUEST

RECOMMENDATION

- TREND ANALYSIS OF THE AVAILABLE DATA SHOULD BE USED FOR EARLY RECOGNITION OF PROBLEMS

Field Service Maintenance Events
66-1 Data

Graphite Skins	Graphite Bonded Structure	Aluminum Bonded Structures

Index

GRAPHITE COMPOSITE SKINS

- HORIZONTAL SKIN
- VERTICAL SKIN

GRAPHITE COMPOSITE BONDED STRUCTURES

- VERTICAL FIN, LEADING EDGE
- RUDDER ASSEMBLY
- HORIZONTAL STABILIZER, LEADING EDGE

ALUMINUM HONEYCOMB BONDED STRUCTURES

- VENTRAL
- WING FIXED TRAILING EDGE
- WING LEADING EDGE
- WING FLAPERON

A39614

Complete Composite Bonded Structures Summary

DISCREPANCY	1980	1981	1982	TOTAL
CUT, WORN, CHAFED, FRAYED, OR TORN		4	20	24
FLUCTUATES UNSTABLE OR ERRATIC		2		2
BROKEN		4	18	22
LOOSE OR DAMAGE	48	183	598	829
MISSING	4	10	2	16
BROKEN, FAULTY OR MISSING, SAFETY WIRE AND KEY	2	1	1	4
ADJUSTMENT OR ALIGNMENT IMPROPER	1	2	3	6
BINDING STUCK OR JAMMED		1	121	122
TENSION OR TORQUE INCORRECT			1	1
CORRODED MILD/MODERATE		12	43	55
CRACKED		3	22	25
DIRTY, CONTAMINATED, OR SATURATED BY FOREIGN MATERIAL	1			1
FAILED TO OPERATE, SPECIFIC REASON UNKNOWN	1		3	4
INCORRECT OUTPUT			1	1
FAILS DIAGNOSTIC/AUTOMATIC TEST	1	2		3
DAMAGE BY SEMI-SOLID FOREIGN OBJECTS (Birds)			3	3
LEAKING, INTERNAL OR EXTERNAL		4	4	8
PITTED, NICKED, CHIPPED, SCORED, SCRATCHED, OR CRAZED			7	7
PUNCTURED		2		2
UNABLE TO ADJUST TO LIMITS		2		2
SHEARED			12	12
AFTERBURNER BLOW-OUT			1	1
STRIPPED	10	31		41
BEARING FAILURE OR FAULTY		4		4
IMPROPER RESPONSE TO ELECTRICAL INPUT		1		1
LOOSE		9	4	13
BENT, BUCKLED, COLLAPSED, DENTED, DISTORTED, OR TWISTED	10	11	32	53
DELAMINATED	3	5	16	24
DETERIORATED	1	3	4	8
REMOVAL FOR REUSE			1	1
CHIPPED	1	1		2
DOES NOT ENGAGE, LOCK, OR UNLOCK CORRECTLY		1		1
SCORED OR SCRATCHED		2		2
TOTAL	83	300	917	1300

Graphite Composite Skins

HORIZONTAL SKIN
VERTICAL SKIN

DISCREPANCY	1980	1981	1982	TOTAL
CUT, WORN, CHAFED, FRAYED, OR TORN			1	1
LOOSE OR DAMAGE		3	16	19
BINDING STUCK OR JAMMED			1	1
CRACKED			5	5
BENT, BUCKLED, COLLAPSED, DENTED, DISTORTED OR TWISTED	8	4	8	20
DELAMINATED	2	1	7	10
CHIPPED		1		1
TOTAL	10	9	38	57

Graphite Composite Bonded Structures

VERTICAL FIN, LEADING EDGE,
RUDDER ASSEMBLY
HORIZONTAL STABILIZER LEADING EDGE

DISCREPANCY	1980	1981	1982	TOTAL
CUT, WORN, CHAFED, FRAYED OR TORN			4	4
FLUCTUATES, UNSTABLE, OR ERRATIC		2		2
BROKEN		2	3	5
LOOSE OR DAMAGE	5	2	34	41
ADJUSTMENT OR ALIGNMENT IMPROPER	1			1
BINDING STUCK OR JAMMED			2	2
CORRODED – MILD/MODERATE			2	2
CRACKED		1	7	8
DIRTY, CONTAMINATED OR SATURATED BY FOREIGN MATL	1			1
FAILED TO OPERATE SPECIFIC REASON UNKNOWN	1		2	3
LEAKING, INTERNAL OR EXTERNAL		3	2	5
PITTED, NICKED, CHIPPED, SCORED, SCRATCHED OR CRAZED			1	1
UNABLE TO ADJUST TO LIMITS		2		2
IMPROPER RESPONSE TO ELECTRICAL OUTPUT		1		1
LOOSE		2		2
BENT, BUCKLED, COLLAPSED, DENTED, DISTORTED OR TWISTED	1	5	6	12
DELAMINATED		2	7	9
DETERIORATED	1	1	1	3
CHIPPED	1			1
SCORED OR SCRATCHED		2		2
INCORRECT OUTPUT			1	1
FAILS DIAGNOSTIC/AUTOMATIC TEST	1			1
TOTAL	12	25	72	109

Aluminum Honeycomb Bonded Structures

VENTRAL
WING FIXED TRAILING EDGE
WING LEADING EDGE
WING FLAPERON

DISCREPANCY	1980	1981	1982	TOTAL
CUT, WORN, CHAFED, FRAYED OR TORN		4	15	19
BROKEN		2	15	17
LOOSE OR DAMAGE	43	178	548	769
MISSING	4	10	2	16
BROKEN, FAULTY OR MISSING SAFETY WIRE & KEY	2	1	1	4
ADJUSTMENT OR ALIGNMENT IMPROPER		2	3	5
BINDING, STUCK OR JAMMED		1	118	119
TENSION OR TORQUE INCORRECT			1	1
CORRODE - MILD/MODERATE		12	41	53
CRACKED		2	10	12
FAILED TO OPERATE SPECIFIC REASON UNKNOWN			1	1
FAILS DIAGNOSTIC/AUTOMATIC TEST		2		2
DAMAGE BY SEMISOLID FOREIGN OBJECTS			3	3
LEAKING, INTERNAL OR EXTERNAL		1	2	3
PITTED, NICKED, CHIPPED, SCORED, SCRATCHED, OR CRAZED			6	6
PUNCTURED		2		2
SHEARED			12	12
AFTERBURNER BLOW OUT			1	1
STRIPPED	10	31		41
BEARING FAILURE OR FAULTY		4		4
LOOSE		7	4	11
BENT, BUCKLED, COLLAPSED, DENTED, DISTORTED OR TWISTED	1	2	18	21
DELAMINATED	1	2	2	5
DETERIORATED		2	3	5
REMOVAL FOR REUSE (Cannibalization)			1	1
DOES NOT ENGAGE, LOCK, OR UNLOCK CORRECTLY		1		2
TOTAL	61	266	897	1134

Horizontal Skin

DISCREPANCY	1980	1981	1982	TOTAL
CUT, WORK, CHAFED, FRAYED, OR TORN			2	2
BROKEN			3	3
LOOSE OR DAMAGE	1		18	19
CRACKED		1	6	7
INCORRECT OUTPUT			1	1
PITTED, NICKED, CHIPPED, SCORED, SCRATCHED OR CRAZED			1	1
BENT, BUCKLED, COLLAPSED, DENTED, DISTORTED, OR TWISTED		3	4	7
DELAMINATED		1	5	6
DETERIORATED		1		1
CHIPPED	1			1
TOTAL	2	6	40	48

Vertical Skin

DISCREPANCY	1980	1981	1982	TOTAL
CUT, WORN, CHAFED, FRAYED OR TORN			1	1
LOOSE OR DAMAGE		1	9	10
DELAMINATED		1	4	5
TOTAL		2	14	16

Vertical Fin Leading Edge

DISCREPANCY	1980	1981	1982	TOTAL
CUT, WORN, CHAFED, FRAYED, OR TORN			1	1
BROKEN		2		2
LOOSE OR DAMAGE	4	2	11	17
CRACKED			1	1
BENT, BUCKLED, COLLAPSED, DENTED *DISTORTED, OR TWISTED*	1	1	1	3
DELAMINATED			1	1
SCORED OR SCRATCHED		2		2
TOTAL	5	7	15	27

Rudder Assembly

DISCREPANCY	1980	1981	1982	TOTAL
CUT, WORN, CHAFED, FRAYED, OR TORN			1	1
FLUCTUATES, UNSTABLE, OR ERRATIC		2		2
LOOSE OR DAMAGE			5	5
ADJUSTMENT OR ALIGNMENT IMPROPER	1			1
BINDING, STUCK OR JAMMED			2	2
CORRODED MILD MODERATE			2	2
DIRTY, CONTAMINATED, OR SATURATED BY FOREIGN MATERIAL	1			1
FAILED TO OPERATE, SPECIFIC REASON UNKNOWN	1		2	3
FAILS DIAGNOSTIC AUTOMATIC TEST	1			1
LEAKING, INTERNAL OR EXTERNAL		3	2	5
UNABLE TO ADJUST LIMITS		2		2
IMPROPER RESPONSE TO ELECTRICAL INPUT		1		1
LOOSE		2		2
BENT, BUCKLED, COLLAPSED, DENTED, DISTORTED OR TWISTED		1	1	2
DELAMINATED		1	1	2
DETERIORATED	1		1	2
TOTAL	5	12	17	34

Horizontal Stabilizer Leading Edge

DISCREPANCY	1980	1981	1982	TOTAL
LOOSE OR DAMAGE		2	7	9
BINDING, STUCK OR JAMMED			1	1
CRACKED			5	5
BENT, BUCKLED, COLLAPSED, *DENTED, DISTORTED, OR TWISTED*	8	4	8	20
DELAMINATED	2		3	5
CHIPPED		1		1
TOTAL	10	7	24	41

Ventral

DISCREPANCY	1980	1981	1982	TOTAL
CUT, WORN, CHAFFED, FRAYED, OR TORN		1	6	7
BROKEN		1	12	13
MISSING	3	7	1	11
LOOSE OR DAMAGE	41	145	411	597
BINDING, STUCK, OR JAMMED			118	118
TENSION OR TORQUE INCORRECT			1	1
CRACKED		1	4	5
PITTED, NICKED, CHIPPED, SCORED, SCRATCHED, OR CRAZED			6	6
AFTER BURNER BLOW OUT			1	1
PUNCTURED		2		2
SHEARED			12	12
STRIPPED	9	30		39
LOOSE		2	3	5
DELAMINATED	1			1
BENT, BUCKLED, COLLAPSED, DENTED, DISTORTED, OR TWISTED			9	9
DETERIORATED		1	2	3
DOES NOT ENGAGE, LOCK OR UNLOCK CORRECTLY		1		1
TOTAL	54	191	586	831

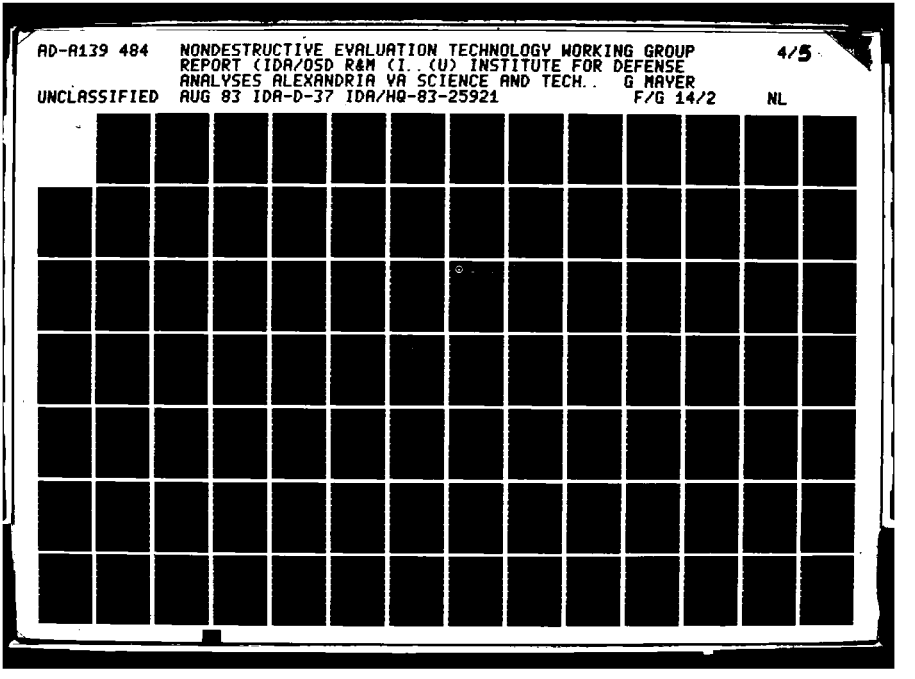

AD-A139 484 NONDESTRUCTIVE EVALUATION TECHNOLOGY WORKING GROUP REPORT (IDA/OSD R&M (I..(U) INSTITUTE FOR DEFENSE ANALYSES ALEXANDRIA VA SCIENCE AND TECH.. G MAYER 4/5

UNCLASSIFIED AUG 83 IDA-D-37 IDA/HQ-83-25921 F/G 14/2 NL

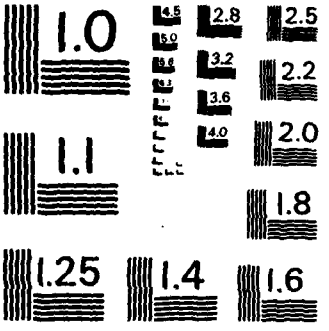

MICROCOPY RESOLUTION TEST CHART
NATIONAL BUREAU OF STANDARDS-1963-A

Wing Trailing Edge

DISCREPANCY	1980	1981	1982	TOTAL
CUT, WORN, CHAFED, FRAYED, OR TORN		2	6	8
BROKEN			1	1
LOOSE OR DAMAGE	1	15	94	110
MISSING		3	1	4
BROKEN, FAULTY OR MISSING SAFETY WIRE AND KEY	2	1		3
ADJUSTMENT OR ALIGNMENT IMPROPER		1	1	2
CORRODED – MILD/MODERATE		11	30	41
CRACKED			4	4
FAILED TO OPERATE, SPECIFIC REASON UNKNOWN			1	1
DAMAGED BY SEMI-SOLID FOREIGN OBJECTS (Birds)			1	1
FAILED DIAGNOSTIC/AUTOMATIC TEST		2		2
LEAKING INTERNAL OR EXTENAL		1	2	3
LOOSE		5	1	6
BENT, BUCKLED, COLLAPSED, DENTED, DISTORTED OR TWISTED		1	7	8
DELAMINATED		1	2	3
REMOVAL FOR REUSE (Cannibalization)			1	1
TOTAL	3	43	152	198

Wing Leading Edge

DISCREPANCY	1980	1981	1982	TOTAL
CUT, WORN, CHAFED, FRAYED, OR TORN	None		1	1
LOOSE OR DAMAGE		2	10	12
BROKEN, FAULTY, OR MISSING SAFETY WIRE AND KEY			1	1
ADJUSTMENT OR ALIGNMENT IMPROPER			1	1
BINDING, STUCK OR JAMMED		1		1
CORRODED MILD/MODERATE		1	8	9
DAMAGED BY SEMI-SOLID FOREIGN OBJECTS (Birds)			2	2
BEARING FAILURE OR FAULTY		4		4
BENT, BUCKLED, COLLAPSED, DENTED, DISTORTED, OR TWISTED			1	1
DELAMINATED		1		1
DETERIORATED			1	1
CRACKED		1	1	2
TOTAL		10	26	36

Flaperon

DISCREPANCY	1980	1981	1982	TOTAL
CUT, WORN, CHAFED, FRAYED, OR TORN		1	2	3
BROKEN		1	2	3
LOOSE OR DAMAGE	1	16	33	50
ADJUSTMENT OR ALIGNMENT IMPROPER		1	1	2
CORRODED – MILD/MODERATE			3	3
CRACKED			1	1
STRIPPED	1	1		2
MISSING	1	1		2
BENT, BUCKLED, COLLAPSED, DENTED, DISTORTED, OR TWISTED	1	1	1	3
DETERIORATED		1		1
TOTAL	4	23	43	70

NDE DATA BASE

RECOMMENDATIONS	TARGET PROGRAM	FOR USE IN	GATEKEEPER & ACTION REQUIRED	COST & TIME REQUIRED TO IMPLEMENT	READINESS IMPACT (ROI)
Expand and update field service data system. Apply data reduction techniques (trend analysis, etc.) to identify and correct problems	All Systems	Field Depot	Air Force SPO Navy PMA Army PM	$3M-2 yrs	+ Operational Readiness 10% + Cost of Repair and Replacement High + Spare Parts High

IV.C. IMPROVEMENTS IN NDE PERSONNEL SELECTION, TRAINING AND QUALIFICATION

A continuing outcry from the technical and administrative management of NDE operations is the quantity and caliber of technicians, the actual NDE inspectors. The methods of personnel selection, training, certification and actual performance cause concern. Experience backgrounds are often not evaluated prior to entry into NDE training and the guidelines or interpretations used for selection do not produce competent candidates.

Various studies conducted during recent years (Refs. 1, 2) have shown that significant variations exist in the proficiency of individual technicians. This severely impacts the overall reliability of nondestructive inspections within DoD.

In regard to NDE personnel availability, DoD and related industry are in direct competition with the Pressure Vessel, Nuclear Power and Pipeline industries to obtain and retain NDE personnel. DoD is at a disadvantage due to lower salary structures and easy availability of overtime in industry. Also the supply of NDE trained personnel has been limited due to the lack of recognized academic facilities such as Trade or Junior Colleges. It now appears that this supply of basically trained personnel is improving. While the potential for bringing about these improvements exists, the mechanism for implementation has not been established.

The following are definitions of the terms as used in this document:

(a) The terms NDE, NDI and NDT are considered interchangeable for the purpose of this paper.

(b) Training is the act of preparing and teaching personnel to perfo..m nondestructive inspections to a level of expertise required to support the specific components and end items of concern.

(c) Capability demonstration is a relative measure of training effectiveness and proficiency of NDE personnel to detect defects. This is determined by practical examinations covering the specific NDE methods which the inspector is expected to perform.

Personnel Selection

Currently the requirements (aptitude and experience) for entry into the NDE career field are at an unacceptable minimum. The selection process shall dictate the appropriate aptitude (e.g., commensurate with a medical x-ray technician) required in such areas as: mechanical, mathematics, electronics, reading comprehension and word knowledge. An individual should have one to three years compatible experience (working with the system they are going to be inspecting) and a metals or weapon structures background of understanding. An important area in the proper selection of personnel is the consideration for the human factors involved in performing NDE inspection. Human factors include such concerns as temperament, physical ability, self-discipline, integrity and the performance of repetitive tasks.

Minimum aptitudes and human factors have not been scientifically established for NDE and must be the subject of future research projects.

Personnel Training

NDI technician training shall be practical, hands-on training, coupled with the basic theory of the materials and NDE methods expected to be performed. This training shall be

specifically directed at the product line/industry within which the trainee will be functioning (e.g., aerospace, ships, etc.). Written tests to determine the level of theoretical understanding should be administered. NDE instructors shall have two to three years of operational, practical experience in the NDE methods being instructed. In addition, the staff will be augmented by including some professional educators to assist in insuring that classroom procedures and methods for effective training are utilized. The NDE equipment used for instruction shall be of the most modern type in general use. This equipment shall be augmented with realistic training aids, inspection samples with typical flaws, standards and peripheral non-NDI components (e.g., Borescopes, OHM meters, cleaning tanks, microscopes and magnifiers). Provisions shall be made for state-of-the-art computer interfaced training devices with real-time feed-back capability for student instruction such as ultrasonic and eddy current training simulators.

Automation

One area of new developments that will have an impact on personnel selection, training and qualification is the increasing emphasis on automating inspection operations. Developing and implementing computer controlled systems that automates the operation, gathers the data and then interprets it, providing accept/reject desisions, will change the requirements for NDE personnel. Increasing numbers of new systems that have such capabilities have been introduced or are now being developed.

The impact of automating inspections will not be felt across the board nor will it occur to any great extent in the near future. Such systems are first being incorporated in manufacturing operations, where the high volume of part inspections justifies the major investment required. This will also occur in some depot operations where large volume inspections are conducted. While these systems will probably not

allow the use of completely unskilled labor, the specific skills required to calibrate, maintain and operate the system will require different selection and training procedures to be used.

The impact of automation on many depot or most field inspection operations will probably be significantly less than in manufacturing. Although the partial automation of some operations will certainly occur (e.g., the development of the Autoscan system for ultrasonically inspecting in the field for cracks emanating from fastener holes without removing the fastener), skilled inspection personnel will still be required. Many on-aircraft inspections will not be suitable, either technically or economically, for automated inspections.

During the period of time when automated systems are being developed and introduced, it is necessary that training requirements be continually reviewed and updated to insure that the procedures being used are compatible with the rapidly evolving nature of the required inspection operations at the manufacturing, depot and field levels. This in turn requires a feed-back system to relay these changing requirements to the appropriate organizations. This might be in the form of annual requirements reports or national training conferences/symposiums.

Capability Demonstrations

At the conclusion of a student's period of training, the individual shall be required to perform a capability demonstration. The capability demonstration will be a realistic, practical test consisting of NDE on flawed and unflawed hardware in sufficient quantities to be representative of actual inspection situations and environments. This test will provide a measure of the individual's practical proficiency, measure the effectiveness of training programs, identify training requirements, and be the first step in the NDE personnel certification process. The capability demonstration should be required to be retaken

periodically (three years, for example) to assure general NDE efficiency and ability. It is most important that the responsibility for the capability demonstration test be maintained at the highest level of management within any one concern (e.g., HQ USA, HQ NAVAIR, HQ USAF, etc.). It is critical that field NDI supervisors be informed as to what level of expertise they will be receiving from this training. The trainee will not be a seasoned, experienced inspector. Rather, the trainee will require on-the-job training, while being supervised, before being qualified to perform the quality inspection expected of fully qualified technicians.

Personnel

A requirement for certification of personnel performing NDE is mandatory. NDE certification is written testimony that the inspector is qualified and has passed required written and practical competency tests regarding the NDE method one is expected to perform. The civilian certification must comply with the MIL-STD 410 D/E. The certification competency requisites must lend themselves specifically to the characteristics of the product to be inspected, (e.g., aerospace vehicles, tanks, nuclear plants, ships, etc.), and NOT general in nature. The responsibilities of each certification level must be clearly defined along with the qualifying and certifying authorities.

Summary

Recommendations for improvements in NDE personnel selection, training and qualification are summarized below:

1. Specific, meaningful criteria must be scientifically established for the selection of personnel performing nondestructive inspections.

2. Training for NDE personnel must emphasize a practical, hands-on approach with modern equipment and realistic

samples continuously evaluated in order to reflect changing requirements.

3. A mandatory requirement must exist for periodic certification of all personnel performing NDE.

4. The certification process must include a realistic, practical test of the individual's capability to detect flaws under conditions representative of actual inspection requirements.

To be effective, it is paramount that the recommendations contained herein be incorporated within the applicable personnel directives, standards, specifications and technical manuals that pertain to NDE personnel selection, qualification, and NDE inspection requirements.

APPENDIX

SUBJECT: RESPONSIBILITY FOR TRAINING AND CERTIFYING NDI PERSONNEL

SUMMARY: This item of interest is the product of a question that was asked at the briefing to Maj Gen Nutt, entitl : "AF NDI Program Office Field Survey of the Pacific Basin l Alaskan Air Command (20 Sep - 14 Oct 82)," presented 11 Jan 8 n the MM Conference Room.

EXPLANATION: The following are definitions of the terms as used in the document.

a. Certification is written testimony that an NDI person is capable of performing at that level of expertise to find the size defects critical to the assigned weapon system. This is determined by written and practical examination.

b. Proficiency is a relative measure of the training effectiveness and capabilities of NDI personnel to detect defects. This will be determined by practical examinations on specifically developed kits for each of the five basic NDI methods.

c. Skill levels are designated by the fourth digit of an Air Force Specialty Code (AFSC). The AFSC for NDI is 427X2 and the "X" is replaced with a one to designate the helper level, a three to designate the semiskilled or apprentice level, a five to designate the skilled or specialist level and a seven to designate the highly skilled or technician level.

61/1-1

d. Training is the act of preparing/teaching personnel to perform nondestructive inspections to a level of expertise required to support Air Force needs or the specific weapon system to which they are assigned.

The general in-residence NDI training of military personnel is the responsibility of HO ATC. HO ATC has three in-residence NDI courses at Chanute AFB, IL. They are: (1) Basic (for awarding AFSC 42232), (2) Advanced (for awarding AFSC 42772), and (3) The maintenance manager orientation.

An Airman Basic (E-1) is awarded AFSC 99000 after completing basic training. Upon assignment to the basic NDI technical school, he is designated as an NDI helper (AFSC 42712, entry point for the nondestructive inspection career field). Military personnel must attend the basic NDI course at Chanute AFB to attain the three skill level in nondestructive inspection (IAW AFR 66-38). In order to advance to the five skill level, the NDI person must be entered into the dual channel on-the-job training progrram (AFR 50-23). The administration and awarding of the five skill level is the responsibility of the major commands. To be eligible for progression to the seven skill level, the NDI person must hold the grade of Staff Sergeant (E-5) or higher, attend a base level management school and complete his on-the-job training or attend the advanced NDI resident course (AFR 39-9, AFR 35-1, AFR 50-23). Nonsupervisory civilians should complete the basic NDI course, at Chanute AFB, or its equivalent. Civilians in immediate supervisory NDI positions should also attend the advanced course or one approved by the Air Force NDI Program Office (IAW AFR 66-38).

A general NDI certification, for other that ALC NDI personnel, is presently being performed only by Air Training Command (IAW

AFR 66-38, HQ ATC Supplement 1). The other major commands do not have a formal certification program. The ALCs train and certify field level NDI personnel to accomplish special (usually for emergency situations) critical NDI inspections in accordance with the applicable NDI T.O. (36, -9, -26). An example of this would be the critical radius eddy current inspection on the T-38 wings. This special certification cannot be obtained from any other source and is only valid for that particular inspection procedure. Based on the manpower availability at the specific ALC, this task is either performed by the ALC MA or MM appropriate organization. SM-ALC/MAQ performs this at McClellan AFB and SA-AALC/MMETM performs this at Kelly AFB.

ALC maintenance NDI personnel certification is performed in accordance with MIL-STD-410 by the ALC MAQ organization. MIL-STD-410 gives specific guidance as to experience, training and physical requirements for certification. It also outlines the practical and written tests that are to be given with the required scoring procedure. Within the ALCs there is not a required upward skill level progression as is the case with the Air Force military. In some cases the NDI person is only trained and certified to perform one specific inspection within an NDI inspection method.

The level of training and certification of NDI personnel at the ALCs rests solely on their specific inspection requirements.

Levels of certification contained in MIL-STD-410, in order of required expertise, are:

a. Level I
b. Level I Special
c. Level II
d. Level III

61/1-3

The Air Force NDI Program Office is presently developing a proficiency program to measure the training effectiveness and capabilities of NDI personnel to detect defects. The results of this test will be used by the Air Force to determine individual training, select the most qualified personnel for a particular task, and as a portion of a general NDI certification test. Its administration and office of responsibility is yet to be determined by HQ USAF/LEY. The ultrasonic and eddy current portions of the proficiency program should be in the field and ALCs during FY85. The remaining three NDI methods, radiography, magnetic particle, and penetrant are in development and should be in the field by FY87.

The Air Force NDI Program Office (MMEI) has the responsibility to oversee the training and certification of all Air Force NDI capabilities of NDI personnel and assure that these programs are in line with current Air Force needs. The Air Force NDI Program Office is charged with this responsibility in accordance with AFR 66-38, which states:

> "An NDI program must be developed and maintained by the Air Force NDI Program Office with help from the designated using and support commands. The program includes personnel training, certification, and equipment control."

Prepared by CMSgt John Dorgan, MMEI, 56408, 25 January 1983.

61/1-4

NDE PERSONNEL SELECTION, TRAINING, AND QUALIFICATION
NDE INSPECTION MANUAL

RECOMMENDATIONS	TARGET PROGRAM	FOR USE IN	GATEKEEPER & ACTION REQUIRED	COST & TIME REQUIRED TO IMPLEMENT	READINESS IMPACT (ROI)
Scientifically establish personnel minimum aptitude, experience, and human factor standards for NDE trainees	All systems requiring NDE	Field Depot	JTCG-NDI (Personnel Subgroup) JLC	Virtually no cost. 6-mos study, immediate implementation	Increased manpower effectiveness Increased inspector proficiency
Establish a mandatory periodic certification (with corresponding incentives) for all NDE personnel	All systems requiring NDE	Field Depot	JTCG-NDI (Personnel Subgroup) JLC	$1K/technician 6 mos to implement	Increased manpower effectiveness Mandatory, recurring training and personnel *evaluation* Personnel placement management tool
Practical, hands-on approach to training complemented with state-of-the-art equipment	All systems requiring NDE	Field Depot	JTCG-NDI (Personnel Subgroup) JLC	Est: $300K annually 3-6 months to implement	Increased inspector proficiency Decreased OJT
Establish and enforce an NDE Inspection Manual (-9,-26,-36) MIL-STD (DOD application)	All new systems requiring NDE	Field Depot Production	JTCG-NDI (Specs & Stds. Subgroup) JLC	Low Cost 1 year to initially implement	Consistent NDE on joint service systems Increased operational readiness
Establish and support NDI Advisory Boards for each major weapon system	All new major weapon systems	Development Production Depot Field	MAJCOM Directives AFR	Low cost 1-2yr to implement	Early NDE consideration in weapon system development

IV.D. NDE INSPECTION MANUALS

NDE technical inspection manuals are required for the consistent application of nondestructive inspection (NDI) methods on any applicable system (aircraft, ships, tanks, missiles, engines, etc.). Some formal, written policy statement is required across the DoD to assure NDE/NDI inspection manual development be considered early in weapon system development and carried through for as long as the system exists. The DoD must strive to prevent:

1. System designs based on unrealistic/unachievable NDI capability.

2. Systems developed without NDI manuals.

3. Systems developed with NDI manuals poorly developed and not DoD validated by appropriate personnel.

4. Stagnation of the NDI manuals (they must be continuously updated throughout the life of the system).

The requirement for an NDI manual needs to be addressed very early in the development of a weapon system so that design considerations regarding its use may be included. However, the actual development of the manual should incorporate results from static and dynamic test programs and any operations test programs to which the weapon system is subjected. As operational experience accumulates any specific NDI requirements resulting from incidents or unanticipated problems should be included by combined action of the manufacturer and the responsible Service's activity.

59/3-1

There is a proposed program for NDI that is being established in the USAF that will have the capability to address and monitor these concerns. This will be the AF NDI Advisory Board. Under the change to AFR 66-38 an NDI Advisory Board will be established to advise the System Program Office (SPO) on all concerns and requirements of the NDI program. The membership of the board would be a SPO Chairman and representatives from the AF NDI Program Office, AFALD, AFWAL, ALC, and contractor (as specified by the SPO). This board would, among its other functions, assure that the contractor will comply with MIL-M-38780A (USAF). This specification is a reasonably well-written guidance document for the preparation of nondestructive inspection manuals which lacks only enforcement. There seems to be no reason why this approach could not be applied across the DoD.

If valid, reliable NDI field and depot inspections are desired, then the implementation of the following recommendations are critical.

1. Establish and enforce a contractual requirement (such as MIL-M-38780A) across the DoD.

2. Establish and support NDI Advisory Boards for each major weapon system.

3. Continuously update the NDI manuals during the entire life of the weapon system.

IV.E. SPECIFICATIONS AND STANDARDS

NDT specifications and standards play a key role in assuring high reliability and reducing maintenance costs. NDT documents tend to fall within two categories: technique documents describing how to perform inspections in a consistent and accurate fashion and acceptance documents which can be used to develop accept/reject criteria for specific components. Although defect acceptance criteria differs with each individual product, the ability to detect defects is the same throughout all industries.

Due to the numerous applications within the DoD complex, these documents can contain only generic requirements which will allow design engineers and NDT personnel to tailor the information to individual components. In this vein the technique documents must contain requirements which ensure the reliability of the inspection, e.g. accuracy and repeatability. Likewise the acceptance documents which exist principally in the radiographic areas, offer the design engineers enough severity classifications of individual defects to permit the selection of those applicable. The proper selection of accept/reject criteria is vital to high levels of reliability and maintainability.

After the design engineer has established the acceptance criteria for a component, the responsible NDT person must develop a detailed inspection procedure for use during any or all production, maintenance or overhaul inspections.

In attempting to streamline this process two thrusts are underway within DoD. One is a drive towards achieving commonality of specifications and standards among producers. Reliability and maintainability can be enhanced by reducing the number of specifications and standards for each NDT discipline. To date the total number of industrial standards adopted within DoD is 20. With regard to the remaining military NDT standards, an effort is underway to modernize them by reducing areas of

redundancy and eliminating standards no longer in use. At the same time, changes are being made which reflect the latest changes in accepted inspection practices. All of these activities are covered in detail in the following sections.

At the present time, there are thirty-two military specifications and standards and twenty consensus (non-government) documents listed in the Department of Defense Index of Specifications and Standards (DODISS) under the federal supply area NDTI which cover nondestructive testing methods and techniques. The DODISS lists the document numbers, titles, date of issue, and the DoD custodians and preparing activity. The DODISS documents appear in both alphabetical (Part I) and numerical (Part II) listings as well as by the Federal Supply Classification (FSC) listing which groups documents by specification classes or areas (for example, the NDTI area).

The NDTI documents, as are all DoD standardization documents, are required to be reviewed every five years (or sooner if the need arises) to determine whether they should be revised, amended, canceled, or validated. Standardization Directory, SD-4, published quarterly, shows the current status of standardization projects worked on during the previous quarter. Copies of the SD-4, along with the DODISS and FSC listings are available in standardization offices throughout the DoD.

The DoD has a Program Plan for Nondestructive Testing and Inspection, prepared by AMMRC, which defines the coordinated management program for standardization effort in the NDTI area. This document is updated every two years. It describes the purpose, scope and objectives of the various project tasks; it establishes priorities and milestones; and it provides time-phased summaries of the tasks required to insure that technical provisions of nondestructive testing documents stay abreast of changes in the state-of-the-art.

Currently the Program Plan consists of nineteen projects. These tasks can be summarized as follows:

1. Glossaries

Ultrasonic	Due 4 QTR FY 83
Acoustic Emission	Due 3 QTR FY 85
Magnetic Particle	Due 3 QTR FY 85
Radiography	Due 2 QTR FY 86

2. Standardization Documents

   The Area NDTI was formed by selecting NDT documents from the more than 600 FSC listings and 30 areas. This is an ongoing project.

3. Status of Standardization Documents

   This is a bookkeeping task involved in keeping track of current and anticipated projects to prevent duplication and insure that documents listed are in effect nondestructive testing. This is an ongoing task.

4. Acoustic Emission Transducer Calibration

   Primary and secondary calibration. A final draft is expected by 4 QTR FY 84.

5. Life-Cycle Application

   This task covers nondestructive testing from assembly to destruction of the piece. A final draft is scheduled for 4 QTR FY 84.

6. Qualification and Certification of Nondestructive Testing Personnel

   MIL-STD-410, MIL-R-11470. Final drafts are expected by the middle of FY 84.

7. Visual Acuity

   This task involves testing of radiographers by use of straight line detection targets on transparencies. These targets resemble discontinuities found in radiographs. Completion date is scheduled for 4 QTR FY 83.

8. Handbooks - General and Composite

General	due 2 QTR FY 84
Composite	due 4 QTR FY 84

9. NDT Methods

   a. Radiographic testing of welds in steel Published 18 Aug 82
   b. Radiographic testing of steel castings Published 13 Sep 82
   c. Penetrant testing - revision to MIL-I-6866 in coordination by 4 QTR FY 84
   d. Ultrasonic testing of wrought metals - Published 30 Sep 82.
   e. Magnetic particle inspection - new standard to replace MIL-M-11472A and MIL-I-6868E; now in full coordination.
   f. MIL-M-47230, magnetic particle inspection- completion date anticipated 4 QTR FY 83
   g. MIL-P-47158, penetrant inspection- completion date anticipated 4 QTR FY 83

The following projects are considered as high priority tasks for the next Department of Defense Program Plan for Nondestructive Testing:

1. To assess and develop acoustic emission nondestructive testing and inspection standardization
2. Visual inspection techniques for welds, castings, etc.
3. Comparison radiographs for real time imaging
4. NDT of degradation of plastics
5. NDT of corrosion - ammunition and gun barrels
6. NDT of degradation of plastics
7. Military standard on film classification
8. Glossary for radiographic terms
9. Fracture mechanics backup for specifications and standards
10. NDT of metal matrix composites
11. Ultrasonic transducer calibration
12. Calibration of eddy current probes

THE PRESENT STATUS AND FUTURE DIRECTION OF MILITARY SPECIFICATIONS AND STANDARDS IN NONDESTRUCTIVE TESTING AND EVALUATION

Bernard H. Strauss
US Army Materials and Mechanics Research Center
Watertown, Massachusetts

Abstract:

This presentation will highlight the formation and activity of the Joint Technical Coordinating Group - Nondestructive Testing, Subgroup for Specifications and Standards. This Subgroup is composed of Army, Navy, and Air Force personnel who meet twice a year to decide on the acceptability of proposed specifications and standards. The plans for this Subgroup are contained in the Department of Defense Program Plan for NDTI. The purpose of the Plan and its many tasks will be expounded. The present bookkeeping method concerning projects will be presented so that interested persons can determine the status of proposed specifications by having access to SD-4, Status of Standardization Projects, which is available in military specifications offices. The talk will illustrate the relationship between consensus groups such as ASTM and the military. Presently, there is much interplay between the groups. Progress for the past year will be highlighted by indicating which documents have been published, revised or superseded and the reasons for such action. A listing of new tasks will be discussed. This list indicates the direction that the government is heading in specifications and standards. Requests for initiating new tasks and Government and industry interest in proposed projects is being solicited.

The Joint Technical Coordinating Group for Nondestructive Testing (JTCG-NDI) was formed three years ago when the Joint Logistics Commanders Action Team was tasked by the Joint Logistics Commanders to review the nondestructive inspection programs to assess opportunities for joint improvement. Their report, which suggested the founding of the JTCG, identified the following key NDI issues:

1. A need to accelerate technology advancements
2. A need to compress new technology deployment times
3. A need to maximize joint efforts
4. A need to improve NDI personnel management
5. A need to upgrade governing specifications, standards and handbooks

The JTCG-NDI is composed of the following five subgroups:

1. technology advancement
2. institutional impediments
3. specifications and standards
4. NDI personnel management
5. joint procurement of NDI equipment

This presentation will cover the progress of the specifications and standards subgroup.

Input from this subgroup impinges directly on the Department of Defense Program Plan for Nondestructive Testing. This Plan sets objectives, priorities and milestones, and provides time-phased summaries of the tasks required to insure that technical provisions of

nondestructive testing documents stay abreast of changes in the state-of-the-art.

The Program Plan is revised every two years and is approved by the Director of Materials Acquisition Policy, Office of the Under Secretary of Defense.

The current Program Plan consists of the following nineteen tasks listed in Table I.

TABLE I

82 NDTI 1-0	MIL-STD-XXX, NDTI Terms & Definitions (MR)
82 NDTI 2-0	MIL-STD-XXX, Glossary of Ultrasonic Terminology For Ultrasonic Test Methods & Procedures (MR)
82 NDTI 3-0	EP Study - NDTI Standardization Documents (MR)
82 NDTI 4-0	SD-4, Status of Standardization Documents (MR)
82 NDTI 5-0	MIL-STD-XXX, Radiographic Inspection for Soundness of Welds in Steel by Comparison to Graded Reference Radiographs (MR)
82 NDTI 6-0	MIL-HDBK-XXX, Guide to Specifying NDT in Materiel Life-Cycle Applications (MR)
82 NDTI 7-0	MIL-I-6866, Inspection, Penetrant Method of (11)
82 NDTI 8-0	MIL-STD-XXX, Magneric Particle Inspection (MR)
82 NDTI 9-0	Revision To MIL-STD-410, Qualification & Certification of NDTI Personnel (11)
82 NDTI 10-0	MIL-STD-XXX, Visual Acuity (MR)
82 NDTI 11-0	MIL-HDBK-728, NDTI Technologies and Techniques (MR)
82 NDTI 12-0	MIL-HDBK-XXX, NDTI Technologies & Techniques in Composites (MR)
82 NDTI 13-0	MIL-STD-XXX, Acoustic Emission Transducer Calibration (MR)
82 NDTI 14-0	MIL-STD-XXX, Inspection, Ultrasonic, Wrought Metals, Process for (AS)
82 NDTI 15-0	MIL-P-47158, Penetrant Inspection, Soundness Requirements for Materials, Parts & Weldments (MI)
82 NDTI 16-0	MIL-M-47230, Magnetic Particle Inspection: Soundness Requirements for Materials, Parts and Weldments (MI)
82 NDTI 17-0	EP Study, Radiographic Inspection: Qualification of Equipment, Operators and Procedures (MR)
82 NDTI 18-0	MIL-STD-XXX, Radiographic Inspection, Classification and Soundness Requirements for Steel Castings (MR)
82 NDTI 19-0	MIL-STD-XXX, Radiographic Terms & Definitions (MR)

These nineteen tasks can be summarized as follows:

1. Glossaries - UT, AE, MP, PT
2. Standardization Documents - determining documents that are primarily nondestructive testing
3. Status of Standardization Documents - bookkeeping involved to prevent duplication
4. Acoustic Emission Transducer Calibration - primary and secondary calibration
5. Life-Cycle Applications - nondestructive testing from assembly to destruction of piece
6. Qualification and Certification of nondestructive testing personnel - MIL-STD-410, MIL-P-11470
7. Visual Acuity - self testing of radiographers
8. Handbooks - General and Composites
9. NDT Methods
   - RT of welds in steel
   - RT of steel castings
   - PT
   - UT inspection of wrought metals
   - MPI

Tasks not included in the Program Plan generally do not involve multi-service or general use.

The Department of Defense has a mechanism for keeping abreast of the status of all of its various projects. For example, Standardization Project Reports are published each quarter. A copy of the second quarter of FY83 is shown in Table II.

The NDTI Standardization Area, according to the DODISS (Department of Defense Index of Specifications and Standards) encompasses thirty-two military specifications and standards and twenty consensus documents. Preparing activities for the military and consensus documents are shown in Table III.

Since January 1982 the following has been accomplished:

1. MIL-STD-1699 and MIL-I-83387 have been updated.
2. ASTM D1220, E125, E164 and E269 have been adopted for use by the DoD.
3. MIL-STD-1264(MR), Radiographic Inspection for Soundness of Welds in Steel by Comparison to Graded ASTM E390 reference Radiographs, was published 18 August 1982.
4. MIL-STD-1265(MR), Radiographic Inspection, Classification and Soundness Requirements for Steel Castings, was published 13 September 1982.
5. MIL-STD-2154, Inspection, Ultrasonic, Wrought Metals, Process for, was published 30 September 1982.

The following projects have been added to the 1982 Program Plan:

1. Glossaries for acoustic emission, magnetic particle and radiography
2. A handbook on NDT of Composites
3. Acoustic emission calibration
4. Qualification and certification of personnel, operations and equipment
5. Update of MIL-P-47158
6. Update of MIL-M-47230

The following newly initiated projects were not listed in the 1982 Program Plan.

1. New document on Surface Quality for Steel Armor Castings
2. New document of Inspection of Electron Beam Welding
3. Ultrasonic Inspection Requirements
4. Gear, Bevel Inspection
5. Bolts and Screws, Processing and Inspection Requirements
6. Compressor Rotor Blades, Processing and Inspection
7. Inspection of Bearings
8. Inspection of Brazing Joints
9. Inspection of Chrome Plate
10. Radiographic Inspection Methods

Documents which have been recently cancelled are listed in Table IV.

GLOSSARIES

Preparation of four glossaries of terms and definitions for nondestructive testing methods are included in the nineteen projects proposed in the Program Plan - NDTI. These include Ultrasonic, Acoustic Emission, Magnetic Particle and Radiography. Plans call for finished military standards in each of these methods by the following dates:

Ultrasonic	4 Qtr FY83
Acoustic Emission	3 Qtr FY85
Magnetic Particle	3 Qtr FY85
Radiography	2 Qtr FY86

A standard format will be followed for each of these documents. Each standard will be divided into three sections, with the first two sections identical for each of the four standards. The first section will consist of broad, primary terms such as the definitions of NDT, nondestructive testing; NTI, nondestructive testing and inspection; NDI,

nondestructive inspection; and NDE, nondestructive evaluation.

The second section will contain definitions of general metrological terms such as accuracy, calibration, precision, standard measurement (physical), standard (physical), standard, reference (reference standard), transfer standard, working standard, calibration specimen, standard calibration specimen, comparison specimen, standard comparison specimen, and working comparison specimen.

The third area will include the terms and definrtions for the particular method. The ultrasonic glossary will include approximately one hundred definitions. In selecting terminology, over thirty published or draft documents were reviewed. The source for each definition is identified. Some definitions are taken from more than one source and resulted in a composite definition.

HANDBOOK OF NDT METHODS

A proposed new handbook on NDT methods should be available in approximately one year. Its contents will include chapters on eddy current, liquid penetrants, magnetic particle, radiography and ultrasonics. Each chapter will include specific guidelines for designers, production engineers, quality assurance and nondestructive engineering personnel. The new handbook will be loose leaf so that new or corrected material can easily be added.

The initial draft was received by AMMRC six months ago from the contractor, General Dynamics, Convair Division. It has been reviewed and sent back for corrections. After acceptance by AMMRC, it will be sent to interested parties for comments and approval of Army, Navy and Air Force.

The handbook is similar in its contents to the Classroom Training Handbooks published by Convair. They are easy to read and well illustrated.

Upon approval, it will replace MIL-HDBK-54, MIL-HDBK-55 and MIL-HDBK-726, and possibly MIL-HDBK-333.

NDTI TECHNOLOGIES AND TECHNIQUES IN COMPOSITES

The purpose of Task 82 NDTI 12-0 is to obtain a handbook on the state-of-the-art techniques in NDT of composites. The handbook will consist of the following chapters:

Part I:	Overview of Characterization Techniques for Composite Reliability
Part II:	Liquid Chromatography, A State-of-the-Art Review
Part III:	Infrared and Raman Spectroscopy, A State-of-the-Art Review
Part IV:	Radiography, A State-of-the-Art Review
Part V:	Ultrasonics, A State-of-the-Art Review
Part VI:	Acoustic Emission, A State-of-the-Art Review
Part VII:	Thermography, A State-of-the-Art Review
Part VIII:	Annotated Bibliography
Part IX:	Applications to the Manufacture of Composite Main Rotor Blade

A final draft should be prepared by the second quarter of FY 84.

RADIOGRAPHIC INSPECTION, CLASSIFICATION AND SOUNDNESS REQUIREMENTS FOR STEEL CASTINGS

This new limited military standard prepared under Task 82 NDTI 18-0 was completed 13 September 1982. It prescribes classification and soundness requirements for steel castings.

The castings are classified by class, grades and criticality levels. Classes are selected by the intended use of the casting. A Class 1 casting is chosen for a critical area in which a single failure would cause significant danger to operating personnel or would result in a significant operational penalty. Classes 2, 3 and 4 have descending orders of margins of safety. The class assigned to a casting affects the sampling size of the lot. Also all areas of a Class 1 casting shall be of a quality equivalent to or better than Grade C, except that all critical areas of a Class 1 casting shall be of a quality equivalent to or better than Grade B.

Grades are classified by letters A, B, C or D as shown in four tables included in the standard. Each table references ASTM reference radiographs for particular thickness castings. A Grade A casting would contain the least and/or the smallest size discontinuities. Grades B, C and D would contain progressively larger and more numerous discontinuities.

Criticality level designates the amount of radiographic coverage for each casting. Those areas designated KL1 shall have a minimum of 75% radiographic inspection. Areas designated KL2 shall require 50% minimum coverage. Those areas designated KL3 do not require radiographic inspection but are generally radiographed for information purposes.

RADIOGRAPHIC INSPECTION FOR SOUNDNESS OF WELDS IN STEEL BY COMPARISON TO GRADES ASTM E390 REFERENCE RADIOGRAPHS

A new limited coordination standard, MIL-STD-1264(MR), Radiographic Inspection for Soundness of Welds in Steel by Comparison to Graded ASTM E390 Reference Radiographs, was published on 18 August 1982. This standard prescribes requirements for radiographic inspection of welds in steel by comparison to selected severity levels of ASTM reference radiographs. The base material varies from 0.25 - 3 inches inclusive in thickness. Volume I and II of ASTM E390 are applicable. The document will be distributed to the Joint Technical Coordinating Group (JTCG) for specifications and standards for comment regarding full coordination. Improvements to this document include the following:

1. Use of ASTM E390 reference radiographs
2. Cancellation of MIL-STD-779 which contained old radiographs with no accept/reject criteria
3. Acceptance/rejection criteria for eight different types of graded discontinuities along with eight listed ungraded discontinuities

ULTRASONIC INSPECTION OF WROUGHT METALS

A new standard, MIL-STD-2154, Inspection, Ultrasonic, Wrought Metals, Process for, was published 30 September 1982. Its purpose is to provide uniform methods for the ultrasonic inspection of wrought metals and wrought metal products.

The methods described are applicable in the detection of flaws in wrought metals and wrought metal products having a cross section thickness equal to 0.25 inch or greater. Wrought metals include forging stock, forging, rolled billet or plate, extruded or rolled bars, extruded or rolled shapes and parts made from them. Application of the methods in this standard is not intended for non-metals, welds, castings or sandwich structures.

LIQUID PENETRANT METHOD

This specification covers inspections, by the penetrant method, of the surfaces of aircraft,

missile and critical ground handling equipment, component parts and the basic materials for fabricating these parts.

The penetrant inspection process is intended for the detection of discontinuities open to the surface, such as cracks, cold shuts, laps and porosity which may be harmful to the part or basic material.

A meeting was held on 18 - 19 August 1982 at the Materials Lab, Wright-Patterson Air Force Base to discuss a revision of MIL-I-6866B and its companion specification MIL-I-25135C, a penetrant material specification. Attendees included government and industry personnel.

It was decided to complete MIL-I-25135 before working on MIL-I-6666. MIL-I-25135 was rewritten to include meeting comments and is now in coordination.

It is anticipated that MIL-I-6866 will be completed by June 1983.

MAGNETIC PARTICLE INSPECTION

This proposed standard establishes minimum requirements for magnetic particle inspection used for detection of discontinuities at or immediately below the surface of ferromagnetic materials.

A draft document titled, Magnetic Particle Inspection, has been produced under Task 82 NDTI 3-0 which incorporates material from ASTM E-709, MIL-M-11472A and MIL-I-6868E. At a meeting held on 14 July 1982, Army, Navy, Air Force and NBS personnel agreed on the contents of the proposed standard. A glossary of magnetic particle terms was developed for inclusion in this standard.

The document will be presented to the JTCG-NDI Subgroup for Specification and Standards for comments regarding changes prior to full coordination.

It is envisioned that with the publication of this detailed standard, the first step will have been taken to eliminate magnetic particle test procedures from military specifications and substitute reference to this standard instead. In so doing, uniform procedures will prevail for use of this technique. Adoption of this military standard will eliminate at least two military specifications, MIL-M-11472A and MIL-I-6868E.

MIL-STD-410D
NONDESTRUCTIVE TESTING PERSONNEL QUALIFICATION AND CERTIFICATION

This standard establishes the minimum requirements for the training, qualifying, examining and certifying of nondestructive inspection personnel for the inspection of materials and parts by the eddy current, liquid penetrant, magnetic particle, radiographic and ultrasonic test methods. It establishes three levels of qualification, Level I, II and III. Level I has a special category for ultrasonic and eddy current testing.

A draft of a revision E is in coordination and a final document should be available by August 1983.

VISUAL ACUITY

There is a need for a practical visual acuity test within DoD to determine the capability of radiographers in detecting and interpreting discontinuities in radiographs. The proposed standard will include transparencies of discontinuities which can be used to test and to self-test radiographers. Persons tested are asked to give the orientation of straight line

detection targets. Reference target parameters such as width and length of target, contrast, blur, form, luminance and relationship of background brighteners resemble actual radiographs of C-130 wing samples used in a Lockheed study for the Air Force.

Work is continuing on making masters of the visual acuity test transparencies. Some difficulty was found with the knife-edged lines which were not satisfactorily produced by x-raying lines engraved on plates. A new set of grooved plates has been machined and are in the process of being x-radiographed.

SUMMARY

We are heading in the following direction:

1. All documents listed in FSC/Areas other than NDTI that are primarily NDT will be removed from their present FSC/Area and placed in the NDTI/Area.
2. All test method material will be removed from specifications and placed into the appropriate standard.
3. A standard will exist for each test method.
4. Each standard will contain a useable glossary.

The following projects are considered as high priority tasks for the next Department of Defense Program Plan for Nondestructive Testing:

1. To assess and develop acoustic emission nondestructive testing and inspection standardization
2. Visual inspection techniques for welds, castings, etc.
3. Comparison radiographs for real time imaging
4. NDT of ceramics
5. NDT of corrosion - ammunition and gun barrels
6. NDT of degradation of plastics
7. Military standard on film classification
8. Glossary for radiographic terms
9. Fracture mechanics backup for specifications and standards
10. NDT of metal matrix composites
11. Ultrasonic transducer calibration
12. Calibration of eddy current probes

I would like to acknowledge the work of persons listed in Table 5. The Program Plan consists of projects from Army, Navy and Air Force and its success is directly related to joint DoD efforts.

Input into the Program Plan is constantly being sought. This includes comments on existing tasks as well as ideas for new tasks.

TABLE II

STANDARDIZATION PROJECTS REPORT
2nd QUARTER FY 1983

Project	Title	BA	PA	A	C	G	S	E	P	AC	NC	AC	OA	TC
NDTI 0042	ASTM E164 81 Ultrasonic Exam Weldments	A2	MR	823		823	G	0	2	MR	AS	11		N1
NDTI 0043	MIL-STD-XXX NDT Terms and Definitions	A4	MR	813		834	C	0	2	MR	AS	11		N1
NDTI 0044	EPS NON-DODISS NDTI Documents	A4	MR	813		833	C	0	2	MR	SH			N1
NDTI 0045	MIL-HDBK-XXX Guide Matl Life Cycle Applica	A4	MR	813		833	C	0	2	MR	AS	11		N1
NDTI 0046	EPS Qual and Cert of NDTI Personnel	A4	MR	813		833	C	0	2	MR	AS	11		N1
NDTI 0047	MIL-HDBK-XXX NDT Technol and Techniques	A4	MR	813		832	C	1	2	MR	AS	11		S1
NDTI 0048	EPS Characterization Al Aly Ultrasonic Blk	A4	MR	821		834	C	1	2	MR	SH	11		S2
NDTI 0053	EPS Visual Acuity	A4	MR	813		832	C	0	2	MR		11		N1
NDTI 0054	MIL-M-11472A Magnetic Particle Inspection	A2	MR	813		832	C	0	2	MR				N1
NDTI 0055	MIL-I-6866B Inspection Penetrant Rev C	A2	20	813	814	843	C	1	2	MT	AS	20		S2
NDTI 0056	MIL-STD Inspection Ultrasonic Wrought	A4	AS	813	814	823	C	0	4	MR	AS	11		N1
NDTI 0058	MIL-STD Casting Class Inspection	A4	AS	814	823	831	C	0	4	MR	AS	11		N1
NDTI 0059	MIL-STD-410 Nondestructive Testing Rev F	A2	20	821	823	843	C	1	2	MR	AS	20		S2
NDTI 0060	ASTM D1220-65 Cyc Tanks, Measure & Cal	D4	YD	822	823	832	A	0	2	MR	YD	99		N1
NDTI 0061	ASTM E269 Def Terms Mag Particle Inspect	A2	MR	823		823	G	0	2	MR	AS	11		N1
NDTI 0062	ASTM E268-81 Def Terms Electromagnetic	A2	MR	823		823	G	0	2	MR	AS	11		N1
NDTI A001	MIL-R-11468A Radiographic Inspec Welds	02	MR	751		833	G	5	2	MR				S6
NDTI A002	MIL-R-11469A Radiographic Inspec Cast	02	MR	751		824	G	5	2	MR				S6
NDTI A020	MIL-STD-XXX Surf Qty Stl Armor Castings	N4	MR	823		833	A	0	2	MR				N1
NDTI F017	MIL-I-83387 Insp Process, Mag. Rubber	C2	20	812	812	833	G	0	2	MR	AS	20		S2
NDTI A019	MIL-I-46175A(MR) Insp and Test Ductile Iron	02	MR	822		834	C	0	2	MR				N1
NDTI A020	MIL-STD-XXX(MR) Surp Qty Stl Armor Castings	N4	MR	823		833	A	0	2	MR				N1
NDTI A022	EPS Qual an Cert NDTI Per Opns in Equip	A4	MR	831		843	C	0	2	MR				N1
NDTI A023	MIL-W-XXXXX Weld Electron Beam Insp Gen Sp	N4	AT	824		832	A	0	1					N1
NDTI A024	MIL-V-XXXXX Ultrasc Insp, Reqs for	N4	AT	824	831	834	A	0	1					N1
NDTI A025	MIL-G-XXXXX Gear, Bevel, Inspection of	N4	AT	824	831	834	A	0	1					N1
NDTI A026	MIL-B-XXXXX Blts, & Scrws, Prcsg & Insp Reqs	N4	AT	824	831	834	A	0	1					N1
NDTI A027	MIL-C-XXXXX Comprsr Rtr Blds, Insp & Id of	N4	AT	824	831	834	A	0	1					N1
NDTI A028	MIL-B-XXXXX Bearings, Inspection of	N4	AT	824	831	834	A	0	1					N1
NDTI A029	MIL-J-XXXXX Jnts, Brzd, Insp of	N4	AT	824	831	834	A	0	1					N1
NDTI A030	MIL-P-XXXXX Plate, Chrme, Inspection of	N4	AT	824	831	834	A	0	1					N1
NDTI A031	MIL-R-XXXXX Radiogrphc Inspth, Methods of	N4	AT	824	831	834	A	0	1					N1

TABLE III

DoD PREPARING ACTIVITY	CODE	No. of DOCUMENTS
Army Armament Research and Development Command	AR	2
Naval Air Systems Command	AS	2
Army Missile Research and Development Command	MI	3
Army Materials and Mechanics Research Center	MR	8
Naval Sea Systems Command (Ordnance Systems)	OS	2
Naval Sea Systems Command (Ship Systems)	SH	5
Naval Facilities Engineering Command, Virginia	YD	1
Air Force Aeronautical Systems Division, AFSC	11	7
San Antonio Air Logistics Center, Texas	82	1
Air Force Logistics Center, Michigan	99	1

The twenty consensus documents are under the following preparing activities.

ASTM		
	MR	15
	AS	2
AMS		
	MR	2
AWS		
	SH	1

TABLE IV

DOCUMENT NO.	DATE CANCELLED	SUPERSEDED BY
MIL-STD-779	29 Mar 82	ASTM E 390
MIL-STD-1263	21 Jul 82	MIL-STD-410D
MIL-R-45226	25 Nov 81	
MIL-R-11468	16 Aug 82	MIL-STD-1264(MR)
MIL-R-11469	13 Sep 82	MIL-STD-1265(MR)
ASTM E 113-67	17 Dec 81	
MIL-I-8950B	30 Sep 82	MIL-STD-2154

TABLE V

ACKNOWLEDGEMENTS

Glossary of Magnetic Particle	NBS	Mordfin/Swartzendruber
Glossary of Ultrasonic	NBS	Mordfin/Eitzen
NDTI Standardization Documents	AMMRC	Strauss/McEleney
SD-4 Status of Standardization Documents	AMMRC	Strauss/McEleney
MIL-STD-1264(MR)	AMMRC	Strauss/McEleney
MIL-STD-1265(MR)	AMMRC	Strauss/McEleney
MIL-I-6866	AFWAL/MLSA	Hardy
MIL-STD-XXX, Magnetic Particle	NBS	Mordfin/Swartzendruber
MIL-STD-410	AFWAL/MLSA	Hardy
Visual Acuity	NBS	Mordfin/Yonemura
MIL-HDBK-728	AMMRC	McEleney/Convair
MIL-HDBK-XXX, Composites	AMMRC	Strauss/Shuford
MIL-STD-2154	NAVAIR	Mahapatra



Department of Defense

PROGRAM PLAN

NONDESTRUCTIVE TESTING AND INSPECTION

(NDTI)

16 DECEMBER 1982

OFFICE OF THE UNDER SECRETARY OF DEFENSE

WASHINGTON D C 20301

RESEARCH AND
ENGINEERING

27 AUG 1980

The Nondestructive Testing and Inspection Standardization Document Program Plan (NDTI) is approved for implementation by all activities within the Department of Defense. Lead Service Activity for this standardization area is the U.S. Army Materials and Mechanics Research Center (AMMRC), Watertown, Massachusetts. The Plan has been coordinated by AMMRC.

It is the responsibility of each identified DoD activity to support the implementation of this Plan and provide the resources necessary to complete the identified tasks within the indicated milestones as provided for under the Defense Standardization and Specification Program (DSSP).

Approved by:

JOHN A. MITTINO
Director, Materiel Acquisition Policy
OUSDR&E

This Program Plan is the first revision to the Nondestructive Testing and Inspection Standardization Document Program Plan published 27 Aug 1980.

2 December 1982
Date

JOHN A. MITTINO
Assistant Deputy Under Secretary for Production
OUSDR&E

TABLE OF CONTENTS

		Page
I.	EXECUTIVE SUMMARY	1
	A. Purpose	1
	B. Scope	1
	C. Background	1
	D. Objectives	2
	E. Problems	2
	F. Approval of Information Requirements	2
II.	SUMMARY OF COORDINATED PROGRAM	3
	A. Description of Documents	3
	B. Implementation	3
	C. Data Item Descriptions (DIDs)	4
III.	OTHER RELATED DOCUMENTS	7
IV.	MILESTONE SCHEDULES	7
V.	DETAIL ANALYSIS	7
TABLE I -	Milestones Schedules	8
TASKS	82 NDTI 1-0 MIL-STD-XXX, NDTI Terms & Definitions (MR)	11
	82 NDTI 2-0 MIL-STD-XXX, Glossary of Ultrasonic Terminology For Ultrasonic Test Methods & Procedures (MR)	13
	82 NDTI 3-0 EP Study - NDTI Standardization Documents (MR)	14
	82 NDTI 4-0 SD-4, Status of Standardization Documents (MR)	15
	82 NDTI 5-0 MIL-STD-XXX, Radiographic Inspection for Soundness of Welds in Steel by Comparison to Graded Reference Radiographs (MR)	16
	82 NDTI 6-0 MIL-HDBK-XXX, Guide to Specifying NDT in Materiel Life-Cycle Applications (MR)	17
	82 NDTI 7-0 MIL-I-6866, Inspection, Penetrant Method of (11)	18
	82 NDTI 8-0 MIL-STD-XXX, Magnetic Particle Inspection (MR)	19
	82 NDTI 9-0 Revision To MIL-STD-410, Qualification & Certification of NDTI Personnel (11)	20

TABLE OF CONTENTS

TASKS (cont'd)		Page
82 NDTI 10-0	MIL-STD-XXX, Visual Acuity (MR)	21
82 NDTI 11-0	MIL-HDBK-728, NDTI Technologies and Techniques (MR) . .	22
82 NDTI 12-0	MIL-HDBK-XXX, NDTI Technologies & Techniques in Composites (MR)	23
82 NDTI 13-0	MIL-STD-XXX, Acoustic Emission Transducer Calibration (MR)	24
82 NDTI 14-0	MIL-STD-XXX, Inspection, Ultrasonic, Wrought Metals, Process for (AS)	25
82 NDTI 15-0	MIL-P-47158, Penetrant Inspection, Soundness Requirements for Materials, Parts & Weldments (MI) . .	26
82 NDTI 16-0	MIL-M-47230, Magnetic Particle Inspection: Soundness Requirements for Materials, Parts and Weldments (MI)	27
82 NDTI 17-0	EP Study, Radiographic Inspection: Qualification of Equipment, Operators and Procedures (MR)	28
82 NDTI 18-0	MIL-STD-XXX, Radiographic Inspection, Classification and Soundness Requirements for Steel Castings (MR)	29
82 NDTI 19-0	MIL-STD-XXX, Radiographic Terms & Definitions (MR) . . .	30

BIBLIOGRAPHY 31

APPENDIX A 32

I. EXECUTIVE SUMMARY

A. Purpose

The purpose of this Plan is to define the coordinated management program for standardization effort in the Nondestructive Testing and Inspection Area (NDTI). The Plan reflects agreement and commitment by the Military Services to the accomplishment of specific tasks within scheduled milestones. The Plan is the principal source of management information required for decision-making at all levels within the DoD.

The Plan sets objectives, priorities and milestones, and provides time-phased summaries of the tasks required to insure that technical provisions of NDTI documents stay abreast of changes in the state of the art. Implementation of the Plan should result in establishment of enforceable requirements, reduction in unnecessary procurement costs, and improvement in the standardization of NDTI within the Government. The Plan is also a means of evaluating the allocation of resources and identifying the work backlog.

This Program Plan was prepared by the Army Lead Service Activity (Army Materials and Mechanics Research Center - MR) in conjunction with the Participating Activities (Naval Air Systems Command - AS and Aeronautical Systems Division, AFSC - 11). Additional preparation assistance was provided by the Joint Service Technical Working Committee under the chairmanship of AMMRC at a committee meeting held in November 1979, during the 28th DoD Conference on Nondestructive Testing.

B. Scope

The NDTI Area is concerned with a commonly recognized group of indirect measurement methods that do not impair or affect the end use of a material or product while producing information relating to quality characteristics. The documents in this area include test methods, procedures for controlling instrumentation variables, procedures for qualification and certification of personnel, and reference criteria used in acceptance inspection.

The NDTI Area includes a large variety of specifications, standards, handbooks, and pamphlets. The principal NDTI methods in current use, and of primary concern in this Program Plan are:

- Radiography
- Ultrasonics
- Penetrant
- Electromagnetic (Eddy Current)
- Magnetic Particle
- Leak Testing

Additional methods such as acoustic emission, thermography, microwave, holography and others will be addressed when a sufficient technological/standardization level has been attained.

C. Background

The NDTI Area assignment was established in April 1973 to provide single management responsibility and direction for standardization documents identified with the technologies and techniques of NDTI. The purpose of the area assignment was to improve and consolidate the specifications and standards concerned with nondestructive testing and inspection methods.

D. Objective

The objective of this Plan is to consolidate and standardize NDTI requirements into a definite number of fully coordinated documents. It provides time phased delineation of specific tasks required to modernize the body of military standardization documents, eliminate redundancy, overlap and duplication. Cost savings to the Government will result by structuring these specifications to facilitate their application to individual system requirements. The Plan has been designed to achieve the following:

1. Centralize the management and control of NDTI standardization requirements.

2. Consolidate existing documents and establish fully coordinated standardization documents.

3. Create a climate for tailored application in individual contracts.

4. Coordinate standard methods to contract for and demonstrate high reliability NDTI.

5. Review procedural specifications with the intent of converting this type of specification to a standard.

E. Problems

NDTI application involves a combination of factors, essentially: (1) a suitable test method, (2) correlation of measurements with defects which are assumed or known to exist in the test piece, (3) a qualified operator, and (4) an acceptance criterion. While specifications and standards problems exist in these various categories, an important step for improving NDTI applications is exhibited by Revision E of military specification MIL-I-6870, "Inspection Program Requirements, Nondestructive for Aircraft and Missile Materials and Parts." A similar, systematic, approach should be useful in addressing general applications of NDTI specifications and standards.

F. Approval of Information Requirements

Paragraph 5.7.7 of MIL-STD-960 states that specifications in area assignments, such as NDTI, shall have an Acquisition Management System Control number (AMSC) assigned to it when Data Item Descriptions (DIDs) are included in the document. All specifications which do not contain data requirements shall bear the notation "No Deliverable Data Required by This Document." Preparing activities should coordinate documents with MIAG Cognizance Officer, in order to have AMSC number assigned. Naval Publications and Forms Center will not publish documents in NDTI Area that do not contain a number or the "No Deliverable Data Required by This Document" statement.

II. SUMMARY OF COORDINATED PROGRAM

A. Description of Documents

An important initial step in promoting timely NDTI standardization is the identification and compilation of those documents which are within the scope of the NDTI standardization area. This list is attached as Appendix A.

A draft of a proposed military handbook MIL-HDBK-XXX on "NDT in the Materiel Life Cycle" has been prepared. This document is essentially a management guide on the benefits, consideration, and use of NDT throughout the materiel life cycle from concept through development, production, deployment and ending in phase out.

There is a multiplicity of documents and diverse problems with regard to qualification and certification of NDTI personnel. Personnel qualification and certification requirements are promulgated in several military specifications and standards and in regulations such as DARCOM Regulation No. 702-22, "Qualification and Certification of DARCOM NDTI Personnel," for Army's internal use. Previous efforts to arrive at some sort of unified or compatible practice(s)/document(s) have been fraught with misunderstandings and other difficulties.

Another area of concern is the qualification and certification of nondestructive testing and inspection equipment. This is a problem currently being addressed by the National Bureau of Standards. This work is being closely monitored by concerned government activities, including AMMRC.

In the area of engineering requirements, i.e., technologies and techniques, there are many redundancies. Present plans call for cancelling most of the redundancies and using a single document as the approved DoD reference.

Also addressed are the many reference standards, both government and industry, used in establishing accept/reject limits for acceptance inspection of materials. These include such items as reference radiographs of castings and weldments and plates showing limits of magnetic particle and penetrant indications. The production and maintenance of these documents involves closely controlled and relatively expensive procedures.

B. Implementation

In implementing this Program Plan, preparing activities will look at military specifications/standards with the specific objective of sectionalizing the documents to facilitate their tailored application in the acquisition process. Sectionalized documents separate each requirement into self-contained statements which can be invoked independently. Application guidance (including the intent of each requirement, where and how it originated, and the flexibility available in imposing each requirement) can be provided in the document or in an associated document.

In addition to sectionalization of military standardization documents, this Program Plan provides for implementation of other standardization goals/objectives to be met in order to provide for a good set of working documents in the NDTI area. These goals/objectives include:

- providing maximum application guidance in NDTI specifications/ standards
- eliminating duplications, voids and inconsistancies among NDTI documents
- updating documents to keep abreast with technology in the NDTI area
- insuring that documents are concise, understandable and as easy to use and interpret as possible
- consolidating the NDTI requirements from non-DODISS source documents into military specifications, standards and handbooks
- insuring that NDTI related Data Item Descriptions and all the source documents are compatible and in accordance with applicable policy
- insuring that NDTI documents that contain a data requirement have Data Item Descriptions prepared and coordinated by the specification/standard preparer
- insuring that the latest test methods are used to verify specification requirements
- changing units of measurement to the metric system as specifications and standards are revised

C. Data Item Descriptions (DIDS)

Data Item Descriptions (DIDS) define the data (i.e., plans, reports, procedures, certifications, manuals, etc.) to be prepared and delivered by contractors to the Government. Thirty DIDS associated with NDTI are listed in the Acquisition Management Systems and Data Requirements Control List (AMDSL). The DIDs related to NDTI are listed in Table I.

TABLE I NDTI DATA DESCRIPTIONS (DIDs) DOCUMENTS

DID No.	TITLE	PREP. ACT.	APPROVAL DATE	SOURCE DOCUMENT
DI-S-3628	Non-Destructive Inspection Plan	19	27 Mar 80	[illegible]-1-6870E MIL-STD-1530A AFR 66-38
DI-T-5301	Qualification and Acceptance Test Procedures	NS	18 Nov 71	
DI-T-5302	Test Pattern Data	NS	09 Nov 73	
UDI-AT-5316	Test Plan (Limited to ER WALLEYE Project)		23 Feb 71	

NDTI Data Item Descriptions (continued)

DID No.	TITLE	PREP. ACT.	APPROVAL DATE	SOURCE DOCUMENT
UDI-AT-5324	Test Procedure Manual, (Limited to SHRIKE)		05 Mar 71	
DI-T-5329	Inspection and Test Reports	NS	15 Sep 72	
DI-T-5408	Reports, Special Testing of Unique Components		06 Aug 76	
DI-T-5422	System Test and Verification Plan	NS	21 Jul 77	NACSEM 5100 MIL-STD-1521
DI-V-7007	Tools and Test Equipment List (TTEL)	16	11 Nov 74	MIL-STD-1552 MIL-STD-1561 OMB22-R-0323
UDI-E-20433	Acceptance Test Procedures	OS, AS	30 Oct 73	
UDI-T-20487	Plan/Procedures, Category I Test	OS	01 Feb 73	
UDI-T-20503	Test Procedures	OS	24 Oct 73	MIL-Q-9858
UDI-T-20593	Production Test Equipment Design Proposals	OS	06 Aug 74	
UDI-E-20602A	Reports, Test, Specification Appendant	OS	04 Nov 75	MIL-S-83490/1 OS MIL-S-83490/2 OS
UDI-R-21375A	Plan, Inspection and Test	AS	24 Sep 75	MIL-I-45208 AF-91
UDI-T-21429	Report, Non-Destructive Inspection (NDI) (Short Form)	AS	25 Sep 75	
DI-T-21479A	Individual Missile Production Test Data	AS	17 Jul 78	MIL-D-8684B ADDENDUM No. 195
UDI-T-22706A	Records, Inspection and Test	EC	28 May 74	
UDI-T-23473	Reports, Test/Inspection	SH	31 Jan 73	
UDI-M-23529	Manual, PECS LBTS Test Procedures	SH	31 Jan 73	

NDTI Data Item Descriptions (continued)

DID No.	TITLE	PREP. ACT.	APPROVAL DATE	SOURCE DOCUMENT
UDI-T-23718	Report, Hull Test Results (Boat)	SH	01 Apr 72	FED-STD-406 MIL-P-21929A MIL-P-17549+ AMD 2 ASTM D 1692
UDI-T-23722	Agenda, Test and Trial (Boats)	SH	01 Apr 72	
UDI-T-23737	Agenda, C. P. Propeller Test	SH	01 Apr 72	MIL-D-1000/2
UDI-T-23738	Reports, Inspection	SH	01 Apr 72	
UDI-T-23739	Report, Format of Test	SH	01 Apr 72	
UDI-T-23905	Plan, Test and Evaluation Program	SH	01 Sep 72	
UDI-T-23921	Procedures, Production Inspection Test	SH	12 Sep 72	
UDI-T-26076	Procedure for Self Check, Test Point and Test Point Selection	SH	30 Nov 72	MIL-STD-1326
UDI-T-26496	Procedures, Operability Test: For Sonar Systems	SH	18 Apr 74	MIL-STD-12 DoD 5220.22-M
UDI-T-26517	Procedure, Shipyard Test (STP) (Limited to AN/BQQ-5 Only)		05 May 70	

When a specification contains data requirements, (Section 6) will identify the items of data by paragraph number within the specification, DID number and title. Any new/revised DID will be prepared in coordination with the specification at the time the specification is revised or prepared, and circulated with the specification through the coordination/approval cycle. A review of the preceding DIDs should be conducted to combine, eliminate or cancel those DIDs which do not support an existing standardization document requirement.

III. OTHER RELATED DOCUMENTS

The matter of detailed test methods and techniques for specific parts and components is of considerable concern to the DoD NDTI Community because of the extremely large number of documents that would be necessary to cover these applications. What is entailed are documents where all the exact and minute details for conducting a particular test on a specific item are clearly and explicitly spelled out. The very nature of NDTI does not lend itself to standardization in this area. Each and every case is different and has to be engineered very carefully on an item-by-item basis. It is the concensus of concerned NDTI experts that these types of detailed procedures be excluded from the standardization area. This is not intended to imply that such documents not be prepared, but rather they must be prepared in consonance with general control documents.

With the increased emphasis on rationalization, standardization and interoperability (RSI), the on-going program activities will address international standardization with particular emphasis on NATO, ISO and ABCA NDTI standardization areas. Current activities of the Quadripartite Working Group on Proofing Inspection and Quality Assurance are already involved in several QSTAG projects. It is also noted that significant effort has been made through the Canadian General Standards Board (CGSB) in the 48GP series to effect compatibility with US standards.

Requests will be made to the various FSC assignees or Area Lead Service Activities to transfer some specifications and standards from their present classes to the NDTI area so that all basically NDTI type documents can be centralized and consolidated for more effective handling of the total NDTI program. Coordination will be effected in other area assignments which impact or overlap the NDTI area, e.g. QCIC "Quality Control/Assurance and Inspection."

IV. MILESTONE SCHEDULES

Table 1, "Milestone Schedules," represents a graphic presentation of the work required and the schedule by which accomplishments will be measured. The Lead Service Activity and Joint Service Technical Working Committee will monitor all progress and make adjustments to the schedule as required.

V. DETAIL ANALYSIS

Following is a detailed analysis of the NDTI Program Requirements identified by task and outlining the milestones, issues, objectives and other information pertinent to accomplishment of this Plan.

TABLE I - MILESTONE SCHEDULE

DOCUMENT AND TASK IDENTIFICATION	PREPARING ACTIVITY	TITLE
MIL-STD XXX 82 NDTI 1-0	MR	NDTI Terms and Definitions Phase IV(a) Terminology for Acoustic Emissions
MIL-STD-XXX 82 NDTI 1-0	MR	NDTI Terms and Definitions Phase IV(b) Terminology for Magnetic Particle
MIL-STD-XXX 82 NDTI 2-0	MR	Glossary of Ultrasonic Terminology for Ultrasonic Test Methods and Procedures
EP Study 82 NDTI 3-0	MR	NDTI Standardization Documents
SD-4 (Area NDTI) 82 NDTI 4-0	MR	Status of Standardization Documents
MIL-STD-XXX 82 NDTI 5-0	MR	Radiographic Inspection for Soundness of Welds in Steel by Comparison to Graded Reference Radiographs
MIL-HDBK-XXX 82 NDTI 6-0	MR	Guide to Specifying NDI in Material Life Cycle Applications
MIL-I-6866 82 NDTI 7-0		Inspection, Penetrant, Method of

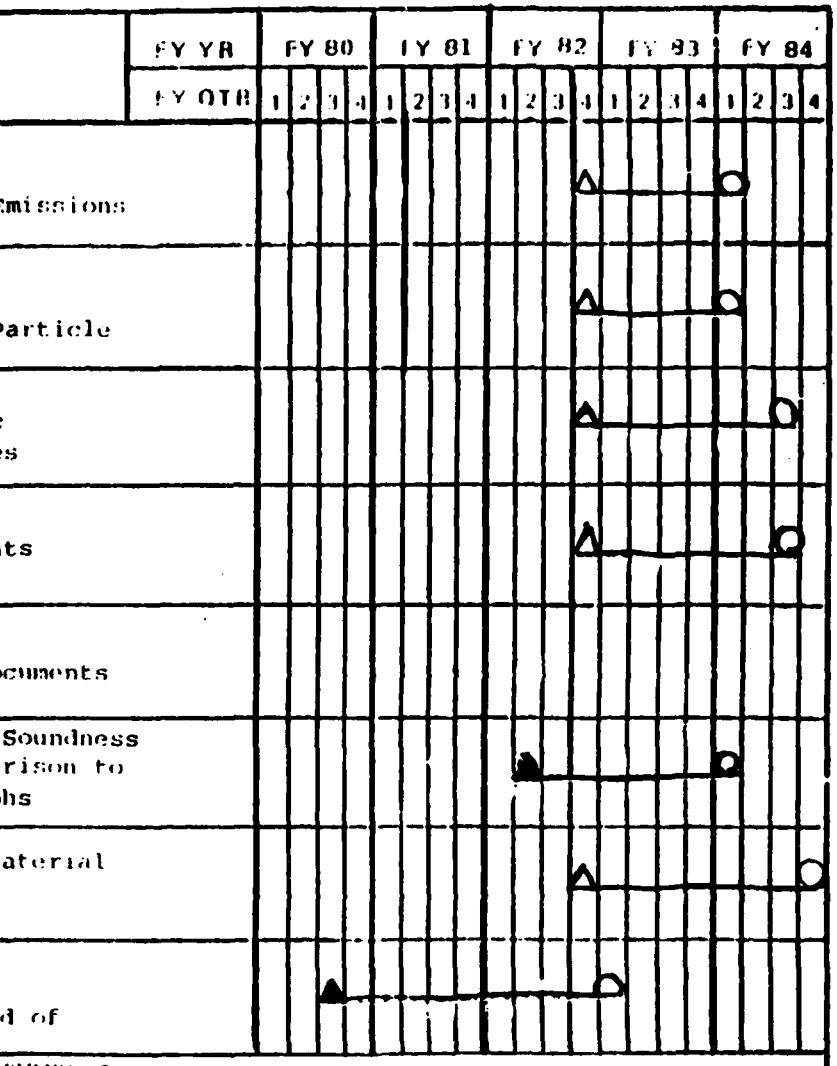

MILESTONE SYMBOLS

SYMBOL	MEANING	SYMBOL	MEANING	REPRESENTATIVE USES	MEANING
△	Scheduled Start	○	Scheduled Completion	△——○	Time Span Action
▲	Actual Start	●	Actual Completion	▲——○	Progress % Along Time Span

TABLE I - MILESTONE SCHEDULE

DOCUMENT AND TASK IDENTIFICATION	PREPARING ACTIVITY	TITLE
MIL-STD-XXX 82 NDTI 8-0	MR	Magnetic Particle Inspection
MIL-STD-410 82 NDTI 9-0	11	Qualification and Certification of NDTI Personnel
MIL-STD-XXX 82 NDTI 10-0	MR	Visual Acuity
MIL-HDBK-728 82 NDTI 11-0	MR	NDTI Technologies and Techniques
MIL-STD-XXX 82 NDTI 12-0	MR	NDTI Technologies and Techniques in Composites
MIL-STD-XXX 82 NDTI 13-0	MR	Acoustic Emission Transducer Calibration Phase I
MIL-STD-XXX 82 NDTI 13-0	MR	Acoustic Emission Transducer Calibration Phase III
MIL-STD-XXX 82 NDTI 14-0	AS	Inspection Ultrasonic, Wrought Metals, Process for

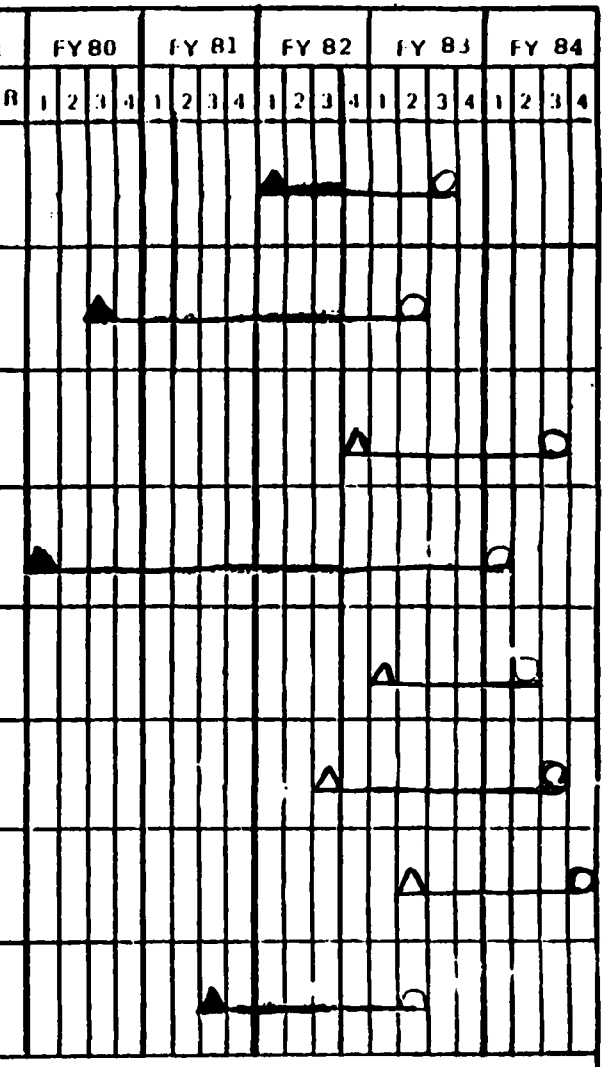

MILESTONE SYMBOLS

SYMBOL	MEANING	SYMBOL	MEANING	REPRESENTATIVE USES	MEANING
△	Scheduled Start	○	Scheduled Completion	△——○	Time Span Action
▲	Actual Start	●	Actual Completion	▲——○	Progress % Along Time Span

TABLE I MILESTONE SCHEDULE

DOCUMENT AND TASK IDENTIFICATION	PREPARING ACTIVITY	TITLE
MIL-P-47158 82 NDTI 15-0	MI	Penetrant Inspection, Soundness Requirements for Materials, Parts and Weldments
MIL-M-47230 82 NDTI 16-0	MI	Magnetic Particle Inspection: Soundness Requirements for Materials, Parts and Weldments
EP Study 82 NDTI 17-0	MR	Radiographic Inspection: Qualification of Equipment, Operators and Procedures
MIL-STD-XXX 82 NDTI 18-0	MR	Radiographic Inspection, Classification and Soundness Requirements for Steel Castings
MIL-STD-XXX 82 NDTI 19-0	MR	Radiographic Terms and Definitions

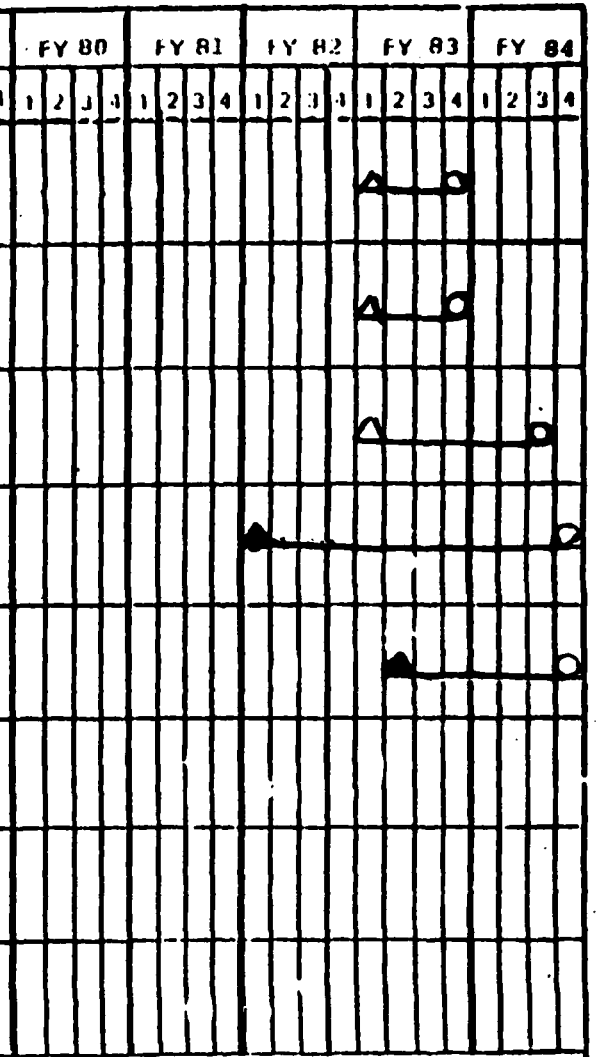

MILESTONE SYMBOLS

SYMBOL	MEANING	SYMBOL	MEANING	REPRESENTATIVE USES	MEANING
△	Scheduled Start	○	Scheduled Completion	△——○	Time Span Action
▲	Actual Start	●	Actual Completion	▲——○	Progress % Along Time Span

TASK IDENTIFICATION: 82 NDTI 1-0, Phase IV(a) and Phase IV(b)

DOCUMENT NO. & DATE: MIL-STD-XXX

TITLE: NDTI Terms and Definitions

PROJECT NO.: NDTI-0064

PREPARING ACTIVITY: Army (MR)

CUSTODIANS: Navy (AS), Air Force (11)

MILESTONES:

Initiate Project	4 Qtr FY 82
Initial Draft	2 Qtr FY 83
Coordination	3 Qtr FY 83
Final Draft	1 Qtr FY 84

PROBLEM/ISSUE/OPPORTUNITY: This is due to the multiplicity of terms and definitions used in NDTI specifications, standards, and other standardization documents to describe the same items or characteristics. There is a definite need for a military standard that would present approved and standardized terminology for the field of nondestructive testing and inspection.

In response to this problem, work on Task 80 NDTI 1-0 has thus far resulted in the development of acceptable, consistent and precise terminologies for primary NDTI terms (Phase I), for general NDTI terms (Phase II), and for terms relevant to ultrasonic test methods and procedures (Phase III). There is opportunity now to proceed into parts of Phase IV, for the development of acceptable terminologies for other areas of nondestructive testing and inspection, as set forth below. This opportunity is particularly attractive at this time because it provides assurance that the terminologies developed for the specific areas of NDTI will be consistent with the broad and general NDTI terminologies already developed, as well as with each other.

OBJECTIVE/PURPOSE: The objectives of the two parts of Phase IV, to be addressed at this time, shall be as follows:

1. Phase IV(a) will develop acceptable, precise and consistent terminology for acoustic emission test methods and procedures.

2. Phase IV(b) will develop acceptable, precise and consistent terminology for magnetic particle test methods and procedures.

TASK: 82 NDTI 1-0 (con't)

These phases will involve the review of ASNT, ASTM, ASME, military and other glossaries and standards covering NDTI terms. It will also involve the identification of terms that need to be defined but are not covered in these glossaries.

RESOURCES: It is estimated that the parts of this task, as set forth above, will require the following man-months of effort:

Phase IV(a) will require three (3) man-months of effort.

Phase IV(b) will require three (3) man-months of effort.

APPLICABLE DIDs: Not Applicable

TASK IDENTIFICATION: 82 NDTI 2-0

DOCUMENT NO. & DATE: MIL-STD-XXX

TITLE: Glossary of Ultrasonic Terminology for Ultrasonic Test Methods and Procedures

PROJECT NO.: NDTI-0065

PREPARING ACTIVITY: Army (MR)

CUSTODIANS: Navy (AS), Air Force (11)

MILESTONES:

Initiate Project	1 Qtr FY 83
Initial Draft	3 Qtr FY 83
Coordination	1 Qtr FY 84
Final Draft	3 Qtr FY 84

OBJECTIVE/PURPOSE: To publish a military standard on terminology for ultrasonic test methods and procedures.

PROBLEM/ISSUE/OPPORTUNITY: There is a definite need for a military standard that would develop approved, standardized terminology for the multiplicity of terms and definitions found in ultrasonic test methods.

The ultrasonic terminology will be taken from six quarterly reports written by NBS which summarize the progress in TASK 80 NDTI 1-0, MIL-STD-XXX, NDTI Terms and Definitions.

RESOURCES: It is estimated that it would take approximately six (6) man-months of effort by the Preparing Activity and three (3) man-months of effort by the Navy and Air Force Custodians.

APPLICABLE DIDs: Not Applicable

TASK IDENTIFICATION: 82 NDTI 3-0

DOCUMENT NO. & DATE: Engineering Practices Study

TITLE: NDTI Standardization Documents

PROJECT NO: NDTI

PREPARING ACTIVITY: Army (MR)

CUSTODIANS: Navy (AS), Air Force (11)

MILESTONES:

Initiate Project	1 Qtr FY 83
Initial Draft	4 Qtr FY 83
Coordination	1 Qtr FY 84
Final Draft	3 Qtr FY 84

PROBLEM/ISSUE/OPPORTUNITY: An identification of all documents (government and nongovernment) applicable to this NDTI Standardization Area is required. This project is a continuance of Task 80 NDTI 2-0

OBJECTIVE/PURPOSE: To provide a viable list of commonly recognized standardization documents pertinent to the scope of the Program Plan - NDTI. The purpose of grouping documents whose emphasis is NDTI is to eliminate redundancy, overlap and duplication.

REFERENCED DOCUMENTS: (See Appendix A)

RESOURCES: It is estimated that it will take about three (3) man-months of effort by the Preparing Activity.

APPLICABLE DIDs: Not Applicable

TASK IDENTIFICATION: 82 NDTI 4-0

DOCUMENT NO. & DATE: Status Report

TITLE: SD-4 (Area NDTI)

PROJECT NO: NDTI

PREPARING ACTIVITY: Army (MR)

CUSTODIANS:

MILESTONES: This is an ongoing task in which SD-4 information is being updated on a constant basis.

PROBLEM/ISSUE/OPPORTUNITY: To update and correct the Status of Standardization Projects, SD-4, for the NDTI Area and to reflect accurate and complete status of the projects.

OBJECTIVE/PURPOSE: Provide a more viable control document for area management purposes and provide continued updating of applicable portions of SD-4.

RESOURCES: It is estimated that it would take one (1) man-month to complete this task by the Preparing Activity.

APPLICABLE DIDs: Not Applicable

TASK IDENTIFICATION: 82 NDTI 5-0

DOCUMENT NO. & DATE: MIL-STD-XXX

TITLE: Radiographic Inspection For Soundness Of Welds In Steel By Comparison To Graded Reference Radiographs

PROJECT NO: NDTI-0037

PREPARING ACTIVITY: Army (MR)

CUSTODIAN: Navy (AS), Air Force (11)

MILESTONES:

Initiate Project	3 QTR FY 81
Initial Draft	4 Qtr FY 81
Rewrite Draft	1 Qtr FY 82
Final Draft	2 Qtr FY 82
Coordination	3 Qtr FY 82
Rewrite Final Draft	2 Qtr FY 83
Coordination	3 Qtr FY 83
Final Draft	1 Qtr FY 84

PROBLEM/ISSUE/OPPORTUNITY: To provide a document containing acceptance/rejection requirements for welds in steel. Reference radiographs from ASTM E390 will be referenced. This Project is a continuance of 80 NDTI 4-0 Phase III.

OBJECTIVE/PURPOSE: To provide an updated standard for radiographic requirements of welds in steel. Welds originating from arc or gas cannot be distinguished; therefore, both types of welds are compared to the same ASTM reference radiographs.

RESOURCES: It is estimated that this task will require five (5) man-months of effort by the Preparing Activity and two (2) man-months of effort by the Navy and Air Force Custodians.

APPLICABLE DIDs: Not Applicable

TASK IDENTIFICATION: 82 NDTI 6-0

DOCUMENT NO. & DATE:: MIL-HDBK-XXX

TITLE: Guide to Specifying NDT in Materiel Life-Cycle Applications

PROJECT NO.: NDTI-0066

PREPARING ACTIVITY: Army (MR)

CUSTODIANS: Navy (AS), Air Force (11)

MILESTONES:

Initiate Project	4 Qtr FY 83
Initial Draft	3 Qtr FY 83
Coordination	1 Qtr FY 84
Final Draft	4 Qtr FY 84

PROBLEM/ISSUE/OPPORTUNITY: To develop an NDT Program Management Handbook as the guideline for NDTI program management.

OBJECTIVE/PURPOSE: To provide guidance on the application of NDTI in materiel life-cycle applications with particular emphasis on, (1) guidance to utilization of specifications and standards, (2) overviews of important considerations in qualification/certification (personnel, laboratories, equipment), and, (3) calibration of equipment and reference standards.

A preliminary draft describing Army views has been prepared and may be used as a basis.

REFERENCE DOCUMENTS: AMCP 702-11, NMAB 337, and DSB - Report of Task Force on Specifications and Standards.

RESOURCES: It is estimated that this task will require twelve (12) man-months of effort by the Preparing Activity and three (3) man-months by the Navy and Air Force Custodians.

APPLICABLE DIDs: Not Applicable

TASK IDENTIFICATION: 82 NDTI 7-0

DOCUMENT NO & DATE: MIL-I-6866

TITLE: Inspection, Penetrant Method of

PROJECT NO.: NDTI-0055

PREPARING ACTIVITY: Aeronautical Systems Division, AFSC (11)

CUSTODIANS: Army (AV), Navy (AS)

MILESTONES: Coordination 3 Qtr FY 82
Final Draft 1 Qtr FY 83

PROBLEM/ISSUE/OPPORTUNITY: There is a need for a current document covering the requirements for penetrant inspection.

OBJECTIVE/PURPOSE: To prepare a revision to this specification MIL-I-6866, that will reflect the latest industry practice and current state-of-the-art for penetrant inspection. This will include a resolution of differences with the penetrant method portion of MIL-STD-271.

RESOURCES: It is estimated that it would take approximately three (3) man-months of effort by the Preparing Activity and the Army and Navy Custodians.

APPLICABLE DIDs: Not Applicable

TASK IDENTIFICATION: 82 NDTI 8-0

DOCUMENT NO. & DATE: MIL-STD-XXX

TITLE: Magnetic Particle Inspection

PROJECT NO: NDTI-0054

PREPARING ACTIVITY: Army (MR)

CUSTODIAN: Navy (AS)

MILESTONES:

Initiate Project	1 Qtr FY 82
Initial Draft	2 Qtr FY 82
Coordination	1 Qtr FY 83
Final Draft	3 Qtr FY 83

PROBLEM/ISSUE/OPPORTUNITY: There is a need for a current standard on magnetic particle inspection for ferromagnetic materials. This is a continuance of 80 NDTI 8-0.

OBJECTIVE/PURPOSE: To publish a current military standard to replace MIL-M-11472 and MIL-I-6868.

RESOURCES: It is estimated that this task will require three (3) man-months of effort by the Preparing Activity and two (2) man-months by the Navy Custodian.

APPLICABLE DIDs: Not Applicable

TASK IDENTIFICATION: 82 NDTI 9-0

DOCUMENT NO. & DATE: Revision to MIL-STD-410

TITLE: Qualification & Certification of NDTI Personnel

PROJECT NO.: NDTI-0046

PREPARING ACTIVITY: AFSC (11)

CUSTODIANS: Army (MR), Navy (AS)

MILESTONES:

Initiate Project	3 Qtr FY 80
Initial Draft	2 Qtr FY 81
Coordination	3 Qtr FY 82
Final Draft	2 Qtr FY 83

PROBLEM/ISSUE/OPPORTUNITY: Standardize requirements governing the qualification and certification of NDT personnel. This is a continuance of Project 80 NDTI 9-0.

OBJECTIVE/PURPOSE: To address the multiplicity of documents and practices in this area with the aim of unification of practices/requirements and reduction of the number of documents shown below under "Reference Documents" as well as the resolution of differences among them.

It is also noted that NDT personnel qualification and certification is the major concern of much international standardization interest.

REFERENCE DOCUMENTS:

MIL-STD-410D	ASNT SNT-TC-1A & Supplements
MIL-STD-00410C(MR)	DARCOM Regulation 702-22
MIL-STD-1263(MR)	ASME Codes
MIL-STD-271 (Portions)	AWS B3.0-41(Portions)
MIL-STD-453	NMAB 252, 337
MIL-I-8950 (Portions)	ASTM STP 624
MIL-R-11470 (Portions)	NAVSHIPS 250-1500-1
MIL-A-11356E (Appendix C)	

RESOURCES: It is estimated that this task will require four (4) man-months of effort by the Preparing Activity and three (3) man-months by the Army and Navy Custodians.

APPLICABLE DOCS: Not Applicable

TASK IDENTIFICATION: 82 NDTI 10-0

DOCUMENT NO. & DATE: MIL-STD-XXX

TITLE: Visual Acuity

PROOJECT NO: NDTI-0053

PREPARING ACTIVITY: Army (MR)

CUSTODIANS: Navy (SH)

MILESTONES:

Initiate Project	1 Qtr FY 83
Initial Draft	4 Qtr FY 83
Coordination	1 Qtr FY 84
Final Draft	3 Qtr FY 83

PROBLEM/ISSUE/OPPORTUNITY: There is a need for a practical visual acuity test within DoD to determine the capability of radiographers in detecting and interpreting discontinuities in radiographs. The proposed standard will include transparencies of discontinuities which can be used to test and to self-test radiographers. This project is a continuance of 80 NDTI 10-0, as the engineering practices study will be adapted into a military standard.

OBJECTIVE: To produce a military standard and sets of eight transparencies (each transparency can be orientated in four directions) to be used in testing of radiographers. The military standard will describe the correct usage of the transparencies.

RESOURCES: It is estimated that this task will require eight (8) man-months of effort by the Preparing Activity and two (2) man-months by the Custodian.

APPLICABLE DIDs: Not Applicable.

TASK IDENTIFICATION: 82 NDTI 11-0

DOCUMENT NO. & DATE: MIL-HDBK-728

TITLE: NDTI Technologies & Techniques

PROJECT NO.: NDTI-0047

PREPARING ACTIVITY: Army (MR)

CUSTODIANS: Navy (AS), Air Force (11)

MILESTONES:

Initiate Project	1 Qtr FY 80
Initial Draft	2 Qtr FY 82
Limited Coordination	3 Qtr FY 82
Rewrite	4 Qtr FY 82
Second Draft	2 Qtr FY 83
Coordination	3 Qtr FY 83
Final Draft	1 Qtr FY 84

PROBLEMS/ISSUE/OPPORTUNITY: Update information and technical details on NDT technologies and document reduction. This project is a continuation of Task 80 NDTI 11-0. The initial draft will soon progress to the rewrite stage. The project was started late due to contract difficulty.

OBJECTIVE/PURPOSE: Advances in NDTI technologies and techniques have outdated current documents in this area. The proposed MIL-HDBK-728 would address this problem and also deal with the multiplicity of overlapping and duplicating documents (listed below). It is the intent that the final handbook will be printed and bound to provide a loose-leafed sectionalized document so that individual sections can be updated or replaced separately.

The resulting handbook will replace the documents listed below:

REFERENCE DOCUMENTS:

MIL-HDBK-54	MIL-STD-271
MIL-HDBK-55	AMCP 702-10
MIL-HDBK-726	MIL-HDBK-333

RESOURCES: It is estimated that this task will require a $75,000 contractual effort. It is also estimated that this task will require two (2) man-months of effort each by the Preparing Activity and Navy and Air Force Custodians.

APPLICABLE DIDs: Not Applicable

TASK IDENTIFICATION: 82 NDTI 12-0

DOCUMENT NO. & DATE: MIL-HDBK-XXX

TITLE: NDTI Technologies and Techniques In Composites

PROJECT NO.: NDTI-0067

PREPARING ACTIVITY: Army (MR)

CUSTODIANS: Navy (AS), Air Force (11)

MILESTONES:

Initiate Project	1 Qtr FY 83
Initial Draft	3 Qtr FY 83
Coordination	4 Qtr FY 83
Final Draft	2 Qtr FY 84

PROBLEM/ISSUE/OPPORTUNITY: To obtain a handbook on the state-of-the-art techniques in NDT of composites.

OBJECTIVE/PURPOSE: To combine nine published reports on NDT techniques of composites into a military handbook. This handbook will consist of the following chapters:

Part I:	Overview of Characterization Techniques for Composite Reliability
Part II:	Liquid Chromatography, A State-of-the-Art Review
Part III:	Infrared and Raman Spectroscopy, A State-of-the-Art Review
Part IV:	Radiography, A State-of-the-Art Review
Part V:	Ultrasonics, A State-of-the-Art Review
Part VI:	Acoustic Emission, A State-of-the-Art Review
Part VII:	Thermography, A State-of-the-Art Review
Part VIII:	Annotated Bibliography
Part IX:	Applications to the Manufacture of Composite Main Rotorblade

REFERENCE DOCUMENTS: Coordinated Army-supported reports under MTT Project No. 7119, Quality Control and Nondestructive Evaluation Techniques For Composites.

RESOURCES: It is estimated that this task will require six (6) man-months of effort by the Preparing Activity.

APPLICABLE DIDs: Not Applicable

TASK IDENTIFICATION: 82 NDTI 13-0, Phase I and Phase III

DOCUMENT NO. & DATE: MIL-STD-XXX

TITLE: Acoustic Emission Transducer Calibration

PROJECT NO.: NDTI-0068

PREPARING ACTIVITY: Army (MR)

CUSTODIANS: Navy (AS), Air Force (11)

MILESTONES:

	Phase I	Phase III
Initiate Project	4 Qtr FY 82	2 Qtr FY 83
Initial Draft	4 Qtr FY 83	2 Qtr FY 84
Coordination	1 Qtr FY 84	3 Qtr FY 84
Final Draft	3 Qtr FY 84	4 Qtr FY 84

PROBLEM/ISSUE/OPPORTUNITY: Following several years of an intensive research and development effort in conjunction with the Electric Power Research Institute, the National Bureau of Standards is now in a position to write procedural documents for the calibration of acoustic emission transducers. This represents a rare opportunity to provide the ultimately necessary standardization framework before ad hoc procedures become entrenched.

OBJECTIVE/PURPOSE:

Phase I - Prepare a procedural document for the primary calibration of acoustic emission transducers.

Phase II - Guide this document through the DoD coordination cycle.

Phase III - Prepare a military standard for the secondary calibration of acoustic emission transducers.

RESOURCES: It is estimated that the several phases of this task will require the following resources:

Phase I will require six (6) man-months of effort.

Phase II will require two (2) man-months of effort.

Phase III will require six (6) man-months of effort.

APPLICABLE DIDs: Not Applicable

TASK IDENTIFICATION: 82 NDTI 14-0

DOCUMENT NO. & DATE: MIL-STD-XXX

TITLE: Inspection, Ultrasonic, Wrought Metals, Process for

PROJECT NO.: NDTI-0056

PREPARING ACTIVITY: Navy (AS)

CUSTODIANS: Army (MR), Air Force (11)

MILESTONES:

Initiate Project	1 Qtr FY 83
Coordination	2 Qtr FY 83
Final Draft	4 Qtr FY 83

PROBLEM/ISSUE/OPPORTUNITY: MIL-I-8950B is too general in its coverage of ultrasonic inspection and has to be made current with present technology.

OBJECTIVE/PURPOSE: Prepare and issue a MIL-STD-XXX superseding MIL-I-8950B which will provide sufficient detail on current technology to afford commonality and standardization for day-to-day procedures and techniques in ultrasonic inspection at military and industry facilities.

RESOURCES: It is estimated that it would take approximately 1-1/2 man-months to complete this task by the Preparing Activity.

APPLICABLE DIDs: Not Applicable

TASK IDENTIFICATION: 82 NDTI 15-0

DOCUMENT NO. & DATE: MIL-P-47158, 7 June 1974

TITLE: Penetrant Inspection, Soundness Requirements for Materials, Parts and Weldments

PROJECT NO.: NDTI-0070

PREPARING ACTIVITY: Missile Command (MI)

CUSTODIAN: Army (MI), Navy (AS) Air Force (11)

MILESTONE:

Initiate Project	1 Qtr FY 83
Initial Draft	2 Qtr FY 83
Coordination	3 Qtr FY 83
Final Draft	4 Qtr FY 83

PROBLEM/ISSUE: Update and fully coordinate the subject document. Currently classified under FSC 6850, it should be in FSC NDTI.

PURPOSE: Subject document complements the penetrant process specification (80 NDTI 7-0) by providing definitive product classification along with the accept/reject criteria.

REFERENCE DOCUMENTS: MIL-I-6866, AMS 3071A

RESOURCES: Total of six (6) man-months.

APPLICABLE DIDs: Not Applicable

TASK IDENTIFICATION: 82 NDTI 16-0

DOCUMENT NO. & DATE: MIL-M-47230, 26 July 1974

TITLE: Magnetic Particle Inspection: Soundness Requirements for Materials, Parts, and Weldments

PROJECT NO: NDTI-0071

PREPARING ACTIVITY: Missile Command (MI)

CUSTODIAN: Army (MI), Navy (AS), Air Force (11)

MILESTONES:

Initiate Project	1 Qtr FY 83
Initial Draft	2 Qtr FY 83
Coordination	3 Qtr FY 83
Final Draft	4 Qtr FY 83

PROBLEM: Update and fully coordinate subject specification. Currently classified in FSC THJM, it should be in FSC NDTI.

OBJECTIVE: Document provides classification and accept/reject criteria, to complement magnetic particle process inspection specification (80 NDTI 8-0).

REFERENCE DOCUMENTS: MIL-I-6868,
MIL-M-11472(MR)
AMS 3071A
ASTM E709

RESOURCES: Total of six (6) man-months.

APPLICABLE DIDs: Not Applicable

TASK IDENTIFICATION: 82 NDTI 17-0

DOCUMENT NO. & DATE: Engineering Practices Study

TITLE: Radiographic Inspection: Qualification of Equipment, Operators and Procedures

PROJECT NO: NDTI-A022

PREPARING ACTIVITY: Army (MR)

CUSTODIAN:

MILESTONES:

Initiate Project	1 Qtr FY 83
Initial Draft	3 Qtr FY 83
Coordination	1 Qtr FY 84
Final Draft	3 Qtr FY 84

PROBLEM/ISSUE/OPPORTUNITY: Reevaluate 30-year-old test kits utilized for radiographic qualification and certification.

OBJECTIVE/PURPOSE: To reevaluate the methods utilized in MIL-R-11470 and MIL-S-11356 to determine radiographic sensitivity and quality. The existing test kits utilized are over 30 years old and no longer reflect current good practice. An additional step required in this task is the revision of the two standards based on the reevaluation.

REFERENCE DOCUMENTS: MIL-R-11470 (Portions)
MIL-A-11356E (Appendix C)

RESOURCES: It is estimated that this task will require four (4) man-months of effort by the Preparing Activity.

APPLICABLE DIDs: Not Applicable

TASK IDENTIFICATION: 82 NDTI 18-0

DOCUMENT NO. & DATE: MIL-STD-XXX

TITLE: Radiographic Inspection, Classification and Soundness Requirements for Steel Castings

PROJECT NO.: NDTI-A002

PREPARING ACTIVITY: Army (MR)

CUSTODIAN:

MILESTONES:

Final Draft	2 Qtr FY 82
Coordination	3 Qtr FY 82
Rewrite Final Draft	2 Qtr FY 84
Coordination	3 Qtr FY 84
Final Draft	4 Qtr FY 84

PROBLEM/ISSUE/OPPORTUNITY: Providing a complete set of reference radiographs for evaluation steel castings. This proposed military standard will contain acceptance/rejection criteria for steel castings. This project is a continuation of Task 80 NDTI 4-0, Phase II.

OBJECTIVE/PURPOSE: To publish a military standard on radiographic inspection, classification and soundness requirements for steel castings. This document will refer to the following ASTM reference radiographs: ASTM E186, E192, F28 and E446. No other reference radiographs will be required. This document will replace MIL-R-11469.

RESOURCES: It is estimated that this task will require eight (8) man-months of effort by the Preparing Activity.

APPLICABLE DIDs: Not Applicable

TASK IDENTIFICATION: 82 NDTI 19-0

DOCUMENT No. & DATE: MIL-STD-XXX

TITLE: Radiographic Terms and Definitions

PROJECT NO.: NDTI-0069

PREPARING ACTIVITY: Army (MR)

CUSTODIANS: Navy (AS), Air Force (11)

MILESTONES:

Initiate Project	3 Qtr FY 83
Initial Draft	2 Qtr FY 84
Coordination	3 Qtr FY 84
Final Draft	4 Qtr FY 84

PROBLEM/ISSUE/OPPORTUNITY: There is a definite need for a military standard on radiography that would present approved and standardized terminology. This need is due to the multiplicity of terms and definitions used in NDTI specifications and standards.

OBJECTIVE/PURPOSE: The objectives will be accomplished in three phases:

Phase I will be a letter report outlining sources of information and a list of proposed radiographic terms.

Phase II will be a letter report giving proposed definitions of radiographic terms.

Phase III is a revision of definitions based on comments received from DoD. A final report will be presented.

RESOURCES: It is estimated that the phases of this task will require the following man-months of effort:

Phase I - one (1) man-month of effort by the Preparing Activity.

Phase II - three (3) man-months of effort by the Preparing Activity

Phase III - two (2) man-months of effort by the Preparing Activity and two (2) man-months of effort by the Navy and Air Force Custodians.

APPLICABLE DIDs: Not Applicable

BIBLIOGRAPHY

1. DoD 4120.3-M, Defense Standardization and Specifications Program Policies, Procedures and Instructions Manual.

2. National Materials Advisory Board - "Nondestructive Evaluation," NMAB 252, June 1969 (Including DoD Supplement).

3. National Materials Advisory Board - "Materials and Process Specifications and Standards," NMAB 330, 1977.

4. National Materials Advisory Board - "Economic and Management Aspects of Nondestructive Testing, Evaluation and Inspection in Aerospace Manufacturing," NMAB 337, December 1977.

5. Defense Science Board - "Report of the Task Force on Specifications and Standards," April 1977.

6. Nondestructive Testing and Inspection, Proposed Program Plan, 26 July 1977.

7. Meeting of Ad Hoc Committee on DoD Nondestructive Testing Specifications and Standards, 14 November 1977.

8. Paper, "Nondestructive Testing and Inspection (NDTI) Specifications and Standards," presented by Mr. H. F. Campbell to the 26th DoD Conference on NDT, November 1977.

(WP DISC #0001A/ID#2494A, FOR AMMRC USE ONLY)

APPENDIX A

NDTI STANDARDIZATION DOCUMENTS

INTRODUCTION

The more common standardization documents dealing with NDTI are listed on the following pages. The listing is broken down into several groups relating to specific NDTI areas. The areas identified are:

General	Electromagnetic (Eddy Current)
Radiography	Magnetic Particle
Ultrasonics	Leak Testing
Penetrant	

The listing shown (compiled as of 13 December 1979) is as current and thorough as practicable for the intended purpose of this Plan. The reader is cautioned to first check the latest issue of the DODISS (or other applicable indexes of technical society publications) to ascertain availability and currency of any document referenced. A list of NDTI standardization handbooks and pertinent quality assurance pamphlets is also included.

The FSC/Area assignment codes are shown for the documents currently listed in the DODISS. DD Form 1865s have been recently prepared to change the codes of many documents to the NDTI Area. Other listed documents will be reviewed to determine whether or not they have sufficient DoD potential to be listed in the DODISS either in their current form or by revising them as necessary or by combining them with other acceptable documents. Acceptance Notices will be prepared for industry and society specifications and standards which are approved for use by the DoD. A continual surveillance will be carried out to locate other NDTI documents which should be addressed by future updates of the NDTI Plan.

Document No.	Title	Prep Act.	FSC/ AREA	DATE
MIL-STD-271	Nondestructive Testing Requirements for Metals. (Radiography, Magnetic Particle, Liquid Penetrant, Leak Testing, Ultrasonics)	SH	MISC	10/73
MIL-STD-798	Nondestructive Testing, Welding Quality Control, Material Control & Identification & Hi-Shock Test Requirements for Piping System Components for Naval Shipboard Use (Radiography, Magnetic Particle, Penetrant)	SH	MISC	12/65
MIL-I-6870	Inspection Requirements, Nondestructive for Aircraft & Missile Materials & Parts (Magnetic Particle, Penetrant, Radiography, Ultrasonic, Eddy Current)	11	NDTI	5/75
ASNT SNT-TC-1A	Recommended Practice Nondestructive Testing Personnel Qualification & Certification Supplement A, Radiographic Testing; Supplement B, Magnetic Particle; Supplement C, Ultrasonic Testing; Supplement D, Liquid Penetrant; and Supplement E, Eddy Current)	ASNT	*	
AWS A2.2-58	Nondestructive Testing Symbols (Replaces MIL-STD-23A)	SH	DRPR	10/75
Air Force TO-00-25-224	Welding High Pressure & Cryogenic Systems (Section 4 - Nondestructive Inspection by Ultrasonic and Eddy Current Methods)	11	**	
MIL-STD-410	Qualification of Inspection Personnel	11	NDTI	7/74
ASTM	Index to ASTM Standards	ASTM	*	1978
ASTM	Book of Standards, Part 11	ASTM	*	1979
ASTM E543	Determining the Qualification of Nondestructive Testing Agencies	ASTM	*	1976
AWS D1.1-81	Structural Welding Code-Steel	AWS	*	
AWS W1	Welding Inspection	AWS	*	
AWS B1.0-77	Guide for the Nondestructive Inspection of Welds	AWS	*	

RADIOGRAPHIC

Document No.	Title	Prep Act.	FSC/ Area	Date
MIL-STD-139	Radiographic Inspection; Soundness Requirements for Aluminum & Magnesium Castings (For Small Arms Parts)	AR	NDTI	1/65
MIL-STD-453	Inspection, Radiographic	AS	NDTI	10/62
MIL-STD-00453	Inspection, Radiographic	11	NDTI	3/77
MIL-STD-746	Radiographic Testing Requirements for Cast Explosives	OS	NDTI	7/63
MIL-STD-779	Reference Radiographics for Steel Welds, Parts 1, 2 & 3	AS	NDTI	11/65
MIL-STD-1257	Radiographic & Visual Soundness Requirements for Cobalt-Chromium Alloy Liners (For Small Arms Barrels)	AR	NDTI	1/67
MIL-R-11468	Radiographic Inspection, Soundness Requirements for Arc & Gas Welds in Steel	MR	NDTI	9/51
MIL-R-11469	Radiographic Inspection, Soundness Requirements for Steel Castings	MR	NDTI	5/53
MIL-R-11470	Radiographic Inspection, Qualification of Equipment, Operators & Procedures	MR	NDTI	7/71
NAVSHIPS 0900-003-9000	Radiograhic Standards for Production & Repair Welds	SH	**	
MIL-R-45774	Radiographic Inspection, Soundness Requirements for Fusion Welds in Aluminum & Magnesium Missile Components	MI	NDTI	5/79
MIL-R-81080	Radiographic Inspection, Quality Levels for (Torpedo MK MOD O)	OS	NDTI	5/64
NAVAER 00-15PC-504	Aeronautical-Technical Inspection Manual Vol 3, Sec 5, Reference Radiographics for Inspection of Aluminum & Magnesium Castings	AS	**	

Document No.	Title	Prep Act.	FSC/ Area	Date
NAVSHIPS 150-537-1	Radiographic Standard for Bronze Castings for X-Ray (to 400 KVP) and Iridium-192	SH	**	
NAVSHIPS 150-537-2	Radiographic Standards for Bronze Castings for Radium, Cobalt-60 & Hi-Voltage X-Ray (1000 KVP and over)	SH	**	
NAVSHIPS 250-692-1	X-Ray Standards for Production & Repair Welds	SH	**	
NAVSHIPS 250-692-2	X-Ray Standards for Hull Structure Welds	SH	**	
NAVSHIPS 250-692-13	Radiographic Standards for Steel Castings	SH	**	
NAVSHIPS 250-692-13 (Suppl. 1)	Radiographic Standards for Nickel-Copper, Copper, Nickel & Aluminum Bronze Alloy Castings	SH	**	
MSFC-SPEC-259A	Radiographic Inspection: Soundness Requirements for Fusion Welds in Aluminum & Magnesium Alloy Sheet & Plate Materials (Space Vehicle Components)		**	
ATAC STD-113	Reference Standards & Radiographic Procedures for Partial Penetration Aluminum Welds	AT	**	
ATAC STD-114	Reference Standards & Radiographic Procedures for Partial Penetration Steel Welds	AT	**	
USA TECOM MTP 8-2-509	Materiel Test Procedure Radiography	TE	**	
AWS AS-10	X-Ray Standard for AWS-ASTM: Specs for Aluminum & Aluminum Alloy Welding Rods & Bare Electrodes	AWS	*	
[illegible] PS-00-15PR-506	Weapons Technical Inspection Manual Reference Radiographs for Inspection of Thin-Wall Steel Castings	[illegible]	**	

RADIOGRAPHIC (Cont'd)

Document No.	Title	Prep Act.	FSC/ Area	Date
ASTM E94	Recommended Practices for Radiographic Testing	MA	NDTI	1977
ASTM E[illegible]	Standard Method for Controlling Quality of Radiographic Testing	MF	NDTI	1977
ASTM E155	Standard Reference Radiographs for Inspection of Aluminum & Magnesium Castings, Series II	ASTM	*	1975
ASTM E186	Reference Radiographs for Heavy-Walled (2 to 4-1/2 in) Steel Castings	ASTM	*	1975
ASTM E192	Standard Reference Radiographs of Investment Steel Castings for Aerospace Application	ASTM	*	1975
ASTM E242	Reference Radiographs for Appearances of Radiographic Images as Certain Parameters are Changed	ASTM	*	1968
ASTM E272	Reference Radiographs for High Strength Copper-Base & Nickel-Copper Alloy Castings	ASTM	*	1975
ASTM E280	Reference Radiographs for Heavy-Walled (4-1/2 to 12 in) Steel Castings	ASTM	*	1975
ASTM E310	Reference Radiographs for Tin-Bronze Castings	ASTM	*	1975
AWS A5.10-61	Specifications for Aluminum & Aluminum Alloy Welding Rods & Bare Electrodes: Aluminum X-Ray Standard	AWS	*	
AMS 2635	Radiographic Inspection	SAE	*	1967
AMS 2650	Fluoroscopic X-Ray Inspection	SAE	*	1945
IIW	International Institute of Welding (Reference Radiographs)	[illegible]	*	
ASTM E390	Reference Radiographs for Steel Fusion Welds	ASTM	*	1977

RADIOGRAPHIC (Cont'd)

Document No.	Title	Prep Act.	FSC/ Area	Date
ASTM E446	Reference Radiographs for Steel Castings up to 2 inches (51 mm) in Thickness	ASTM	*	1975
ASTM E431	Guide to Interpretation of Radiographs Semiconductors & Related Devices	ASTM	*	1972
ASTM E505	Standard Reference Radiographs for Inspection of Aluminum & Magnesium Die Castings	ASTM	*	1975
ASTM E545	Standard Method for Determining Image Quality in Thermal Neutron Radiographic Testing	ASTM	*	1975
MIL-STD-1166	Radiographic Testing Requirements for Solid Propellants	MI	1375	5/63
AWS RD	Radiographics of Welds	AWS	*	
AWS HR	Handbook of Radiographic Apparatus and Techniques	AWS	*	
AWS RRS	Reference Radiographs of Defects in Welds-Steel	AWS	*	

ULTRASONIC

Document No.	Title	Prep Act.	FSC Area	Date
[illegible]-STD-770	Ultrasonic Inspection of Lead	SH	NDTI	7/62
MIL-STD-1263	Qualification & Certification of Inspection Personnel (Ultrasonic)	MR	NDTI	[illegible]/73
MIL-I-8950	Inspection, Ultrasonic, Wrought Metals, Process for	AS	NDTI	[illegible]/78
MIL-U-81055	Ultrasonic Inspection, Immersion of Wrought Metal, General Specification for (Torpedo MK 46 MCD 0)	OS	NDTI	5/84
NAVSHIPS 0900-006-3010	Ultrasonic Inspection, Procedure & Acceptance Standards for Hull Structure, Production Repair Welds	SH	**	
AISI	Industry Practices for Ultrasonic Nondestructive Testing of Steel Tubular Products	AISI	*	
AISI	Ultrasonic Inspection of Steel Products	AISI	*	
Al. Assoc.	Ultrasonic Quality Limits for Aluminum Mill Products	-	*	
Al. Assoc.	Ultrasonic Standards for Plate, Extrusions and Forgings	-	*	
AMS 2630	Ultrasonic Inspection	SAE	*	1960
AMS 2631	Ultrasonic Inspection of Titanium Alloys	SAE	*	1972
AMS 2632	Ultrasonic Inspection of Thin Materials - 0.5 inch (13 mm) and Thinner	SAE	*	1974
AMS 2633	Ultrasonic Inspection - Centrifugally-Cast Corrosion-Resistant Steel Tubular Cylinders	SAE	*	1977
ASTM A578	Straight-Beam Wave Ultrasonic Examination of Plain & Clad Steel Plates for Special Applications	[illegible]	*	1979
ASTM E113	Ultrasonic Testing by the Resonance Method	MR	NDTI	1967

Document No.	Title	Prep Act.	FSC/ Area	Date
ASTM E114	Recommended Practice for Ultrasonic Pulse-Echo Straight-Beam Testing by the Contact Method	MF	NDTI	1975
ASTM E127	Fabricating & Checking Aluminum Alloy Ultrasonic Standard Reference Blocks	ASTM	*	1976
ASTM E164	Ultrasonic Contact Inspection of Weldments	MF	NDTI	1974
ASTM E213	Ultrasonic Inspection of Metal Pipe & Tubing for Longitudinal Discontinuities	ASTM	*	1979
ASTM E214	Immersed Ultrasonic Testing by the Reflection Method Using Pulsed Longitudinal Waves	ASTM	*	1979
ASTM E273	Ultrasonic Inspection of Longitudinal & Spiral Welds of Welded Pipe & Tubing	MF	NDTI	1974
ASTM E317	Evaluating Performance Characteristics of Pulse-Echo Ultrasonic Testing System	ASTM	*	1979
ASTM A388	Ultrasonic Examination of Heavy Steel Forgings	ASTM	*	1978
ASTM A418	Ultrasonic Inspection of Turbine & Generator Steel Rotor Forgings	ASTM	*	1977
ASTM A435	Straight-Beam Ultrasonic Examination of Steel Plates for Pressure Vessels	ASTM	*	1975
ASTM A503	Ultrasonic Examination of Large Forged Crankshafts	ASTM	*	1975
ASTM A531	Ultrasonic Inspection of Turbine-Generator Steel Retaining Rings	ASTM	*	1979
ASTM A577	Ultrasonic, Angle-Beam Examination of Steel Plates	ASTM	*	1977
NAS 824	Inspection, Ultrasonic, Wrought Metal	-	**	

ULTRASONIC (Cont'd)

Document No.	Title	Prep Act.	FSC/ Area	Date
ASNT	Recommended Ultrasonic Acceptance Standards for Airframe Aluminum Alloy Plate, Forgings & Extrusions	ASNT	*	
ASTM B594	Ultrasonic Inspection of Aluminum-Alloy Products for Aerospace Applications	ASTM	*	1974
ASTM E428	Fabrication & Control of Steel Reference Blocks Used in Ultrasonic Inspection	ASTM	*	1971
ASTM E494	Measuring Ultrasonic Velocity in Materials	ASTM	*	1975
ASTM E500	Standard Definitions of Terms Relating to Ultrasonic Testing	MR	NDTI	1974
ASTM E588	Detection of Large Inclusions in Bearing Quality Steel by the Ultrasonic Method	ASTM	*	1976
ASTM A388(1978)	Ultrasonic Examination of Heavy Steel Forgings	ASTM	*	1980
ASTM A418	Ultrasonic Testing and Inspection of Turbine and Generator Steel Rotor Forgings	ASTM	*	1977
ASTM A503	Ultrasonic Examination of Large Forged Crankshafts	ASTM	*	1975
DOE (AEC)	Ultrasonic Examination of Heavy Steel Forgings	DOE	*	
NAS (AIA)	Inspection, Ultrasonic, Wrought Metal	NAS	*	
Aluminum Assoc	Ultrasonic Standards for Plate, Extrusions, and Forgings	AL Assoc	*	
AISI	Ultrasonic Inspection of Steel Products	AISI	*	
AWS	Handbook on the Ultrasonic Examination of Welds			
AWS UTL	Ultrasonic Testing in Eleven Languages	AWS	*	

PENETRANT

Document No.	Title	Prep Act.	FSC/ Area	Date
MIL-I-6866	Inspection; Penetrant, Method of	11	NDTI	1/69
Air Force T.O.42c-I-10	Inspection of Materials; Fluorescent & Dye Penetrant Methods	-	**	
M&FC-STD-366	NASA Standard: Penetrant Inspection Method	-	*	
ASTM E165	Liquid Penetrant Inspection Method	MR	NDTI	1975
ASTM E270	Terms Relating to Liquid Penetrant Inspection	MF	NDTI	1976
AMS 2645	Fluorescent Penetrant Inspection	SAE	*	1969
AMS 2646	Contrast Dye Penetrant Inspection	SAE	*	1969

ELECTROMAGNETIC (EDDY CURRENT)

Document No.	Title	Prep Act.	FSC/ Area	Date
ASTM b342	Method of Test for Electrical Conductivity by Use of Eddy Current	ASTM	*	1964
ASTM E215	Standardizing Equipment for Electromagnetic Testing of Seamless Aluminum-Alloy Tube	ASTM	*	1967
ASTM E243	Electrogmagnetic (Eddy Current) Testing of Seamless Copper & Copper-Alloy Tubes	ASTM	*	1974
ASTM E268	Definitions of Terms Relating to Electro-magnetic Testing	MJ	NDTI	1976
ASTM E309	Eddy-Current Examination of Steel Tubular Products Using Magnetic Saturation	ASTM	*	1977
ASTM E376	Coating Thickness by Magnetic Field or Eddy-Current (Electromagnetic) Test Methods	ASTM	*	1969
ASTM E426	Electromagnetic (Eddy-Current) Testing of Seamless & Welded Tubular Products, Austenitic Stainless Steel & Similar Alloys	ASTM	*	1976
ASTM E566	Electromagnetic (Eddy-Current) Sorting of Ferrous Materials	ASTM	*	1976
ASTM E570	Flux Leakage Examination of Ferromagnetic Steel Tubular Products	ASTM	*	1976
ASTM E571	Electromagnetic (Eddy-Current) Examination of Nickel & Nickel Alloy Tubular Products	ASTM	*	1976
ASTM B529-70 Changed to E244	Nonmagnetic Basis Metals, Measurement of Coating Thickness by the Eddy-Current Test Method Nonconductive Coating On	MR	MFFP	4/70

MAGNETIC PARTICLE

Document No.	Title	Prep Act.	FSC/ Area	Date
MIL-I-6868	Inspection Process; Magnetic Particle	[illegible]	NDTI	3/76
MIL-M-11472	Magnetic Particle Inspection; Process, for Ferro-Magnetic Materials	MR	NDTI	11/81
MIL-M-11473	Magnetic Particle Inspection; Soundness Pequirements for Weldments	MR	NDTI	9/[illegible]
MIL-M-19595	Magnetic Effect Limits for Non-Magnetic Equipment Used in Proximity of Magnetic Influence Ordnance	OS	NDTI	6/78
NAVAER 00-15PC-503	Technical Inspection Manual; Vol 3, Sec 4 Magnetic Particle Inspection	AS	**	
ASTM A275	Magnetic Particle Examination of Steel Forgings	MR	NDTI	197[illegible]
ASTM A456	Magnetic Particle Inspection of Large Crankshaft Forgings	ASTM	*	1971
ASTM E125	Standard Reference Photographs for Magnetic Particle Indications on Ferrous Castings	ASTM	*	1963
ASTM E269	Definitions of Terms Relating to Magnetic Particle Inspection	MR	NDTI	1978
ASTM E709	Practice for Magnetic Particle Examination	ASTM	*	1980

LEAK TESTING

Document No.	Title	Prep Act.	FSC/ Area	Date
Fed. Test Method Std. No. 151 Method 441.1	Leak Testing (Helium Mass Spectrometer)	MP	95GP	11/67
Fed. Test Method Std. No. 151 Method 442.1	Leak Testing (Pressurized Gas)	MP	95GP	11/67
Fed. Test Method Std. No. 151 Method 443.1	Leak Testing (Vacuum)	MP	95GP	11/67
ASTM E425	Standard Definitions of Terms Relating to Leak Testing	ASTM	*	1971
ASTM E427	Standard Recommended Practice for Testing for Leaks Using the Halogen Leak Detector (Alkali-ion Diode)	ASTM	*	1971
ASTM E432	Standard Recommended Guide for the Selection of a Leak Testing Method	ASTM	*	1971
ASTM E479	Standard Recommended Guide for Preparation of a Leak Testing Specification	ASTM	*	1973
ASTM E493	Standard Test Methods for Leaks Using the Mass Spectrometer Leak Detector in the Inside-Out Testing Mode	ASTM	*	1973
ASTM E498	Standard Methods of Testing for Leaks Using the Mass Spectrometer Leak Detector or Residual Gas Analyzer in the Tracer Probe Mode	ASTM	*	1973
ASTM E499	Standard Methods of Testing for Leaks Using the Mass Spectrometer Leak Detector in the Detector Probe Mode	ASTM	*	1973
ASTM E515	Standard Method of Testing for Leaks Using Bubble Emission Techniques	ASTM	*	1974

HANDBOOKS

Document No.	Title	Prep Act.	FSC/ Area	Date
MIL-HDBK-54	Electromagnetic Testing (For Inspection of Materials Handbook H-54)	MR	NDTI	10/65
MIL-HDBK-55	Radiography (Handbook H-55)	MR	NDTI	4/66
MIL-HDBK-333	Handbook for Standardization of Nondestructive Testing Methods	MR	NDTI	4/74
MIL-HDBK-726	Ultrasonic Testing	MR	NDTI	5/74

QUALITY ASSURANCE PAMPHLETS

AMCP 702-10	Guidance to Noncestructive Testing Techniques	MR	*
AMCP 702-11	Guide to Specifying NDT in Materiel Life Cycle Applications	MR	*

*To be reviewed and coordinated for possible listing in the DODISS (Department of Defense Index of Specifications and Standards)

**Service peculiar document -- to be reviewed as task assignment by pertinent DoD activities for proper disposition (i.e. list in DODISS, revise, combine, etc.)

ACTIVITY CODES

AR - Army Armament Research and Development Command

AS - Naval Air Systems Command

AT - Army Tank-Automotive Materiel Readiness Command

MI - Army Missile Research and Development Command

MR - Army Materials and Mechanics Research Center

OS - Naval Sea Systems Command (Ordnance Systems)

SH - Naval Sea Systems Command (Ship Systems)

TE - Army Test and Evaluation Command

YI - Air Force Aeronautical Systems Division, AFSC

TECHNICAL SOCIETIES

AISI - American Iron and Steel Institute

ASNT - American Society for Nondestructive Testing

ASTM - American Society for Testing and Materials

AWS - American Welding Society

IIW - International Institute of Welding

NAS - National Aerospace Standard - Aerospace Industrial Association

SAE - Society of Automotive Engineers

COPIES OF SPECIFICATIONS AND STANDARDS CAN BE OBTAINED FROM:

Commander
Naval Publications and Forms Center
5801 Tabor Avenue
Philadelphia, PA 19120

SPECIFICATIONS AND STANDARDS

RECOMMENDATIONS	TARGET PROGRAM	FOR USE IN	GATEKEEPER & ACTION REQUIRED	COST & TIME REQUIRED TO IMPLEMENT	READINESS IMPACT (ROI)
Establishment of Common Specifications and Standards in Generic Areas	General	Production Field Depot	DMSSO Increased Funding	$2M-5yr	Eliminate Redundant Standards and Specifications Reduction of Overall Number

IV.F. FRACTURE MECHANICS AND NDE

ABSTRACT

Development of fracture mechanics technology has made a significant impact on Nondestructive Evaluation (NDE). It has required great improvements to be made in several aspects of NDE. Not only is increased sensitivity required in order to detect smaller flaws to provide more efficient designs, but the reliability of those inspections must be increased and quantitatively defined. It has required the use of statistically designed demonstration programs that can accurately define not only what is the largest size flaw that can go, undetected but what the chances of missing that size flaw are.

INTRODUCTION

During the past twelve to fifteen years, significant progress has been made in the development of fracture mechanics concepts that has allowed a new approach to be taken to the design of damage tolerance structures - structures capable of operating over some planned life-time that are resistant to catastrophic failure due to the existence of unanticipated and undetected flaws. The following discussion considers the relationship between the several important technologies that are involved and briefly defines how this approach is being applied to both critical airframe and engine structures.

BACKGROUND

The U.S. Air Force has pioneered in the application of fracture mechanics to the design of critical aircraft and engine structures. In order for this approach to work successfully, it has required the development of a very close interface between three critical technologies; (a) fracture mechanics, (b) control of fracture toughness and crack growth properties in appropriate structural materials, and (c) nondestructive evaluation (NDE). The important considerations in making this concept work effectively in structural applications are shown in Fig. 1. It is first of all necessary to accept the fact that flaws do exist in real structures as they emerge from the manufacturing plant. Many years of real experience have proven this to be the case. Developments in fracture mechanics technology allow accurate calculations to be made that describe the effect of such flaws on the structural performance of critical components, i.e., the time or service exposure required for a given flaw to grow to critical size. These design requirements are not applied to all parts on one aircraft, but only those that are determined to be fracture critical. That is, those parts whose failure can result in loss of the system. In order to insure that the mathematical solutions derived for various geometries and loading conditions can be accurately applied, it is necssary that the fracture toughness

and crack growth behavior of the materials are determined under the conditions, (i.e., the strain rates, frequencies and temperatures) that will be encountered in the real structures and that those critical properties of the materials actually used in construction of the hardware are guaranteed to the same minimum levels used in the design. Finally, the inspection methods used in the manufacturing facility must be quantitatively evaluated and controlled to insure that no flaw larger than that used in the design calculations can escape detection. In order to insure that the inspection methods are accurate, demonstration programs are required to define statistically the probability of a flaw being missed. The level of reliability that has been required has been the 90% probability at the 95% confidence level. This is the "B" allowable that is applied to mechanical property data for the construction materials as listed in MIL-HDBK-5.

The task of demonstrating the NDE capability of a manufacturing, depot or field inspection process is very challenging and is still in an evolving state. The Aerospace Committee of the American Society for Nondestructive Testing (ASNT) recently published a Recommended Practice for conducting such a demonstration. (Ref. 1).

The basic steps required are shown in Figure 2. Once the probability and confidence levels have been selected, the program must be designed to generate sufficient data on "flawed" specimens containing the correct number of flaws in appropriate size ranges to allow a statistical analysis to be conducted. An excellent discussion of the many factors involved in determining the reliability of an inspection process, including different statistical methods of interpreting the data, is given by Packman et al. (Reference 2)

One of the very important considerations in conducting a demonstration program is preparing or obtaining flawed specimens. Because of the need to have a sufficient number of flaws in each given size range to be demonstrated and the difficulty of being able to find used hardware with such flaws of known size, it has become necessary to prepare specimens with controlled-size flaws grown into them. Some of the considerations involved are shown in Figure 3. The most widely accepted technique for preparing flawed specimens is to "damage" the surface by introducing an elox notch or touching the surface with a spot welder to create a small as-cast puddle, then load the specimen in bending and observe the initiation of a fatigue crack at the damaged area. By polishing the area around the damage and visually monitoring the length of the surface crack that grows, it is possible, based on experience in growing cracks under the particular conditions used and breaking them open to measure their length and depth, to know exactly what size and shape the crack is by measuring its surface length. After growing to the desired depth,

the surface damaged area can be accurately machined away leaving a fatigue crack of the desired surface length and depth. This technique has the advantage of good size control, cracks can be introduced in various geometries to simulate real hardware and there is some control over the tightness of the crack. The main disadvantage is using a fatigue crack to demonstrate a manufacturing inspection capability, when real manufacturing flaws will not be fatigue cracks. There are other techniques to make flaws, such as deforming elox notches in compression to close them, either with or without oxide inclusions, but the size control is usually not as accurate. The ideal situation, of course, is to collect and characterize hardware containing real flaws that have been introduced in service, but that is usually difficult or impossible to do, particularly where new systems are concerned where there is no hardware in service.

Once all three of these technologies are brought under control, they can be applied in the design of damage tolerant structures that offer not only greatly increased reliability, but much better durability to minimize the life cycle costs in operating those systems during their design lifetime. The following sections summarize the application of durability and damage tolerance design concepts to both airplanes and engines by the U. S. Air Force.

THE AIR FORCE APPROACH TO AIRCRAFT STRUCTURE DESIGN

Since fatigue is one of the major factors controlling the performance and life expectancy of an aircraft, it has been mandatory that, during the structural design phase, an approach be adopted that

would take into account the effect of cyclic loading on the structure. Appropriate steps are then taken to achieve the desired system life without incurring unnecessary weight penalties (and related performance penalties) resulting from overdesign. Until about 1970, the approach used by the Air Force to obtain durability and safety was to put strong emphasis on the initial static strength of the structure and incorporate a "safe-life" concept to achieve the desired fatigue life. This approac which is shown in Figure 4, assumed that the production fleet aircraft had a safe-life that was equivalent to one-fourth of the safe-life demonstrated in a full-scale ground fatigue test of a production aircraft. It assumed that all production aircraft were initially flaw-free and depended on the factor of four to account for such anomalies as environmental effects, material property variations and variations in as-manufactured quality. All maintenance actions (inspection and required structural modifications) were then based upon the results of this full-scale test combined with tracking data generated as the aircraft were flown. It was assumed that this 1/4 test life limit and inspections performed during the service would protect the safety of the fleet.

How effective has this approach proven to be? Experience has shown it to be woefully inadequate, for a number of reasons. Figure 5 shows a plot of flaw size versus lifetime of the airframe. The curve on the right is the fatigue curve established from testing the full-scale article, which includes the assumption that all structures are flaw free. There is a period of service during which flaws will initiate and "incubate" (form a proper shape for stable growth). They will then grow until, at some point, they reach

critical size and propagate catastrophically. This point, by definition, is at or beyond four planned-service lifetimes of the aircraft. However, if there is an undetected initial flaw of large enough size, it can propagate to critical size in less than one lifetime as illustrated in the left curve. Unfortunately, that has often been the case. Data at the bottom of the figure shows some actual experience with Air Force systems. In the case of the F-4, the ground fatigue test indicated the lifetime should be in excess of 11,800 hours. Yet first failure occurred in approximately 1200 hours. The F-111 was an even more striking example. The fatigue test article indicated an expected life of more than 40,000 hours. Yet an aircraft was lost due to propagation to critical size of a manufacturing flaw in the vital wing pivot fitting in only about 100 hours.

There were a number of other shortcomings to the safety-assurance methodology used at that time, including

(a) use of a production aircraft for the fatigue qualifying test, which meant that if problems were discovered as the test progressed, expensive modifications were required for all those aircraft already produced by the time the problem was discovered and analyzed and a "fix" was developed.

(b) failure to require a detailed post-test teardown inspection to identify other highly stressed areas where sub-critical crack growth was occurring.

Recognizing these shortcomings, the "safe-life" approach of using full-scale fatigue test results and a scatter factor to maintain structural safety has been abandoned. In its place, the Air Force

is now using the Aircraft Structural Integrity Program (ASIP) for design and analysis, testing and force management of new Air Force systems as shown in Figure 6. This program is defined in Military Standard 1530 "Aircraft Structural Program" and includes a series of related military specifications and handbooks. This approach represents some major changes in philosophy. One important difference is that the safety requirements and the durability requirements are decoupled.

To achieve safety, the aircraft must be designed to be damage tolerant. Instead of assuming that the initial structure is flaw free, which was a naively unrealistic assumption at the outset, the assumption is now made that flaws do exist in critical structural members, i.e., initiation has already occurred. The structure must now be able to perform its planned function for the desired lifetime with that flaw present. There are two design options available to achieve that goal

(a) Fail-safe

(b) Safe crack growth

Fail-safe, as illustrated in Figure 7, means that the structure is designed to contain a single member failure without loss of the aircraft It requires that an alternate load path be available for all critical structural components. This approach has some shortcomings. It requires positive assurance of early detection of a failed component since the fail-safe feature is lost after failure of one path if there are only dual paths initially. A fail-safe structure is also generally heavier than one designed by the safe-crack-growth approach and deteriorates with the onset of general cracking in adjacent members. This is the method usually used for the design of commercial aircraft. In addition, however, commercial designs have also tended to use lower stresses and lower strength, higher toughness (less

"crack-sensitive") materials, trading performance for more durability.

The safe-crack-growth approach for damage tolerance assumes that a flaw of some maximum size exists in a critical part at the start of the service life and that this flaw will not grow to critical size durir the planned service life. It is illustrated in Figure 8. The success of this approach is very highly dependent on several important factors. The first is a very strong reliance on the manufacturing inspection procedures used to insure that the probability of a flaw larger than the assumed size escaping detection is very low. In programs to date, manufacturers have been required by the Air Force to assume that flaws defined in MIL-A-83444, shown in Figure 9, exist in the structure at the start of service. If they want to assume a smaller flaw to allow them to design a more highly stressed and therefore lighter structure, they must demonstrate to a 90% probability - 95% confidence level that flaws above their selected size will not escape detection in their normal manufacturing inspection operation.

This approach also requires that as many fracture-critical areas as possible are identified during design. Those areas not recognized during design must then be detected by full-scale fatigue testing of the structure, which is still an integral part of the program. However, there are differences in this testing phase from the full-scale fatigue tests employed in the old safe-life approach, as shown in Figure 10, in that the airframe used is a research, development, test and evaluation (RDT&E) article and full-scale production is not initiated until this aircraft experiences at least one lifetime of testing to help identify any additional "hot spots". Furthermore, after completion of the required two lifetimes of testing, there is a detailed post-test teardown inspection to insure early

identification of all weak spots in the aircraft. Other differences in full scale testing are also shown in this Figure.

This has been only an abbreviated summary of the ASIP program. There are many additional elements involved that are beyond the scope of this discussion. The program has been applied, however, to the development of all new Air Force aircraft, including the A-10, B-1, F-15 and F-16. In addition, damage tolerance and durability assessments have been completed for almost all older aircraft to determine their condition with respect to fatigue, including the F-4 (several models), A-7, C-5A, C-141A and B, F-111, B-52, T-38, E-3A, F-5, KC-135, SR-71, T-39 and C-130.

ENSIP

As part of an effort to increase the reliability and reduce the cost of operating and maintaining gas turbine engines for the Air Force, the Engine Structural Integrity Program (ENSIP) has been evolving an approach to defining the structural performance, design, development and verification requirements for new engines for Air Force aircraft. A Military Specification designated as MIL-E-XXXX (USAF) has been prepared by the Aeronautical Systems Division (ASD) at W-PAFB Ohio which defines ENSIP. The specification is written in generi format so that it can be "tailored" for use by specific System Program Offices to define an engine that will satisfay their own needs. An accompanying Handbook is attached as an Appendix to provide specific guidance on the rationale, background criteria, lessons learned and instructions necessary to tailor specific sections of the specification for application. The technical approach is similar to the Aircraft Structural Integrity Program (ASIP), which is defined in Military Standard 1530 (USAF) and which has been used successfully for

several years in the design of airframes for Air Force systems.

One of the most significant features of ENSIP that differs from the approach traditionally used in designing engine structures is the requirement to apply durability and damage tolerance criteria to critical components. This requires, just as in the previously discussed airframe design, that the designer assume that flaws exist in the engine structure as manufactured and then design the critical parts so that the flaws cannot grow to the size that will cause failure either in the lifetime of the part or at least in some predetermined inspection interval. It also establishes life management requirements and procedures to insure that necessary inspections are made that are capable of finding flaws in the size range used in design and that the engine parts are sufficiently durable so that the economic life of the engine is acceptable. The ENSIP specification will be published in 1983.

The impact of this approach on the inspection community, as in the airframe approach, is very significant. Based on the estimated capability of state-of-the-art inspection methods and procedures (which will be discussed later), many improvements are going to have to be made both in manufacturing and depot practice to satisfy the intent of ENSIP. Furthermore, to allow the full implementation of this approach, the problem of defining available inspection capability in quantitative terms must continue to receive attention. Acceptable procedures must be established so that it is possible to define exactly how sensitive the inspection methods are on a statistical basis.

As an example of the ENSIP approach, the method currently used for life management of cycle limited engine components (e.g. some engine disks) is shown in Figure 12. The lifetime of such a part has been established in the past by its low cycle fatigue (LCF) limit of crack initiation time based on the minus 3 sigma limit or the one in one thousdandth probability of a crack initiating. When the disk reaches that LCF limit, it is automatically discarded regardless of whether a crack has developed or not. There are two major concerns in this approach. The first is the fact that it does not take into account the possibility that a flaw might exist in the new part as manufactured (in spite of many disasterous experiences over the years that have proven conclusively that often times new parts are not perfect). Secondly, most of the disks are discarded with a significant amount of life remaining in them because there has been no acceptable methodology developed for removing the one in one thousand disks that has actually developed an LCF crack and needs to be removed. Economically, this is a very expensive penalty.

The technology that will allow such an approach to be used is now being developed through the application of fracture mechanics and knowledge of crack growth behavior in those materials used for critical engine parts. This "Retirement for Cause" (RFC) or "Lifing" approach is an integral part of ENSIP.

First, parts must be identified (Figure 13) as fracture critical (can jeopardize flight safety) or durability critical (can result in significant maintenance costs). Within those parts defined as critical, the specific areas or locations must be identified.

AD-A139 484 NONDESTRUCTIVE EVALUATION TECHNOLOGY WORKING GROUP REPORT (IDA/OSD R&M (I.. (U) INSTITUTE FOR DEFENSE ANALYSES ALEXANDRIA VA SCIENCE AND TECH.. G MAYER

5/5

UNCLASSIFIED AUG 83 IDA-D-37 IDA/HQ-83-25921 F/G 14/2 NL

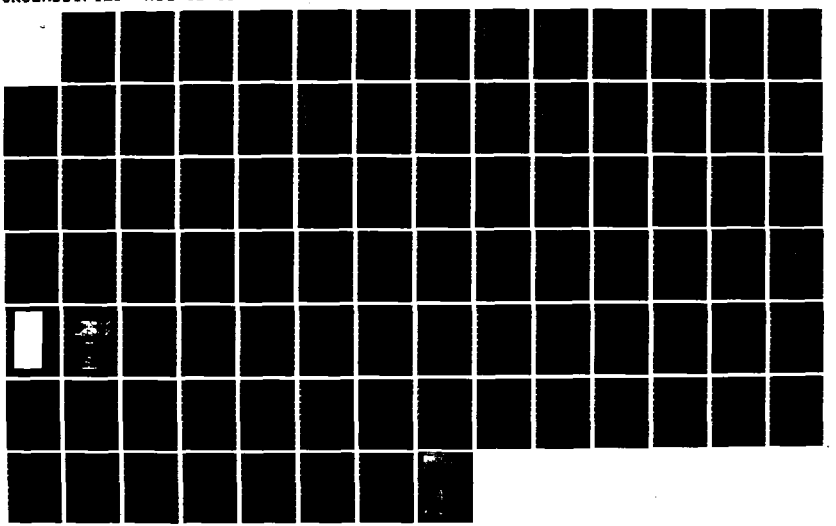

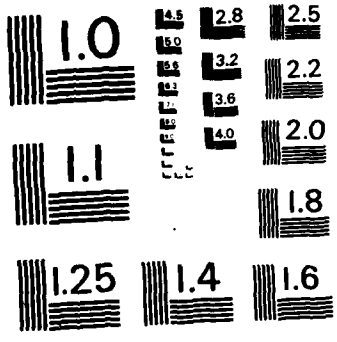

MICROCOPY RESOLUTION TEST CHART
NATIONAL BUREAU OF STANDARDS-1963-A

Then, a damage tolerance analysis is made, as shown in Figure 14. An initial flaw size (A_i) is assumed and, based on crack growth and fracture toughness data, crack size as a function of time (or engine cycles) and the critical crack size are determined, at which time the part is assumed to fail. The time required is called the Safety Limit (SL). Finally an interval is selected (usually one-half the safety limit) and that is defined as either the life time of the part or the inspection interval. The critical information that the inspection community must provide to make this procedure workable, of course, is the value of A_i, or the largest size flaw that can escape detection in the manufacturing operation. This size must be known exactly and it must be detectable with a high statistical probability. The same knowledge is required for inspections conducted in the maintenance environment, so that at the completion of a depot inspection operation, the largest size flaw that may exist is quantified.

ANTICIPATED INSPECTION REQUIREMENTS

One of the key elements in the formulation of MIL-E-XXXXX is the definition of the inspection capability requirements for establishment of A_i. They are summarized in Figure 15 as they are currently proposed. In order to assure the Air Force that the required size flaws can be detected reliably, demonstration programs conducted in the manufacturing and depot environments will be required. The target size flaws to be used in design until demonstrations can be completed are 0.030 inch-surface length where FPI is used, 0.015 inch-surface length for eddy current or ultrasonics, 0.002 sq. in. area for imbedded defects (which is approximately equal to the equivalent reflection of a 3/64" diamter flat bottom hole) and, for weldments,

0.200 inch surface length for unmachined welds and 0.2t diameter for imbedded flaws in welds where t is the thickness. If reliable detection of flaws this small cannot be demonstrated, larger A_i will have to be used.

EXPERIENCE TO DATE

In anticipation of the incorporation of ENSIP and as was done for ASIP, an after-the-fact analysis of certain existing Air Force engines is being undertaken to identify potential problem areas. The first of these structural assessments was conducted on the F-100 engine that powers the F-15 and F-16 aircraft. A joint Pratt and Whitney/Air Force team spent sixteen months conducting a detailed study of the engine. Since this engine was originally designed in the early 1970's, improved analytical methods, better and more complete data on the materials and several years of actual engine usage have allowed a much more thorough analysis to be undertaken.

An example is shown for a typical titanium alloy disk in Figure 16 Curves showing the safety limit for four critical areas in the disk, plotted as initial flaw size A_i (depth) versus operating hours or cycles indicate the life available as a function of the initial size flaw assumed to be in the designated critical areas of the disk. The limitin area is the balance weight flange where, in order to achieve an acceptable inspection interval, the flaw size that must be reliably detected by the manufacturing inspection is 0.010 inch deep. Although fracture mechanics deals primarily with flaw depth, the NDE methods normally used for detecting surface connected flaws such as these can only estimate surface length. If the aspect ratio of the flaw

is assumed to be 3:1 (a compromise), then the surface length that must be reliabily detected in this case is 0.030 inch.

It was concluded (Figure 17) that the capability to reliably detect smaller flaws was required, both in the depot and in manufacturing. A capability demonstration program using specimens fabricated from the actual alloys involved and simulating the geometry of the critical areas involved was conducted. These specimens contained fatigue induced cracks in the critical areas that covered the desired size range. The program showed that eddy current procedures using properly designed probes focused to interrogate the critical areas were capable of finding flaws in the required size range. Penetrant methods were not reliable unless very special surface preparation methods were used and even then, some of the smaller flaws were too tight to be detected. However, it was concluded that the penetrant inspection was still needed for overall evaluation but that the process must be improved to increase the probability of finding flaws in all size ranges. Other work done showed that a cryogenic spin test of titanium alloy disks at liquid nitrogen temperature was a viable proof test to insure that no critical flaws exist in such components.

As a result of this program, Pratt and Whitney, under contract to the Air Force, developed special eddy current equipment stations which were installed in the Spring of 1980 at the San Antonio Air Logistics Center. They also trained Air Force inspectors to conduct these special inspections. In addition, ultrasonic shear wave inspection of certain blades has been incorporated. Recommendations for upgrading the penetrant inspection process at San Antonio ALC were also made.

A cryogenic proof test facility for the titanium components is being designed and built for implementation by 1983. A similar durability and damage tolerance(DADTA) assessment was recently completed on the TF-34 engine for the A-10 aircraft and similar improvements in depot inspection capability at the Alameda Naval Air Rework Facility (NARF), where this engine is overhauled by the Navy.

The basic question that needs to be considered, however, is whether the flaw sizes shown in Figure 15 that are proposed for inclusion in the ENSIP program are realistic. Can flaws that small be detected reliabily and reproducably in the manufacturing production environment and in the depot environment in parts that have been exposed to a variety of operationl conditions? Demonstration of inspection capability is a difficult job at best. Demonstration procedures have been used on a number of programs as indicated in Figure 18, and ASNT has prepared a suggested procedure for accomplishing them. Unfortunately, the state-of-the-art is still such that each demonstration appears to be planned and carried out differently to meet its own special purpose. Based on experience to date, however, which includes the Air Force "Have Cracks Will Travel" program, a number of demonstrations to satisfy MIL-STD-1530(B-1, A-10, F-15, F-16) the previously mentioned F-100 SAT and others, it is unlikely that currently practiced production inspection operations can meet all the detection size requirements set forth in Figure 15 at the 90% probabilit 95% confidence level. Experience resulting from the F-100 SAT in establishing adequate inspection procedures at the San Antonio ALC, on the other hand, indicates that, given the proper incentive and

adequate resources, it is possible to meet such rigid requirements - but at a price. In that case, well motivated people and very special equipment and procedures are doing the job.

The challenge facing the engine inspection community now, however, is one of taking the necessary management and technical actions to allow this sophisticated level of inspection to be conducted on a more routine basis, both in manufacturing and in the depot, and to be made more economically viable.

REFERENCES

1. Rummel, Ward D., "Recommended Practice for a Demonstration of Nondestructive Evaluation (NDE) Reliability on Aircraft Production Parts", Materials Evaluation, Vol. 40 Nr. 9 August 1982, pp 922-930

2. Packman, P. F.. Klima, S. J., Davies, R.L., Malpani, J., Moyzis, Jr., Walker, W., Yee, B. G. W., and Johnson, D.P., "Reliability of Flaw Detection by Nondestructive Inspection", Metals Handbook, Eighth Ed., Volume II, pp 414-424, 1976.

FRACTURE MECHANICS / NDE CONCEPT

- ASSUMES FLAWS EXIST IN CRITICAL COMPONENTS
- QUANTITATIVELY DESCRIBES THEIR EFFECT
- REQUIRES GUARANTEE OF LARGEST SIZE FLAW THAT CAN GO UNDETECTED IN MANUFACTURE / FIELD INSPECTION
- REQUIRES DEMONSTRATION OF MANUFACTURING / FIELD INSPECTION CAPABILITIES

FIGURE 1

NDE CAPABILITY DEMONSTRATION

- STATISTICAL PROGRAM DESIGN
- PROBABILITY / CONFIDENCE LEVEL SELECTION
- "FLAWED" SPECIMEN PREPARATION
  - PERSONNEL
  - ENVIRONMENT
- INTERPRETATION

FIGURE 2

FLAWED SPECIMEN PREPARATION

- FATIGUE CRACKS
  - GOOD SIZE CONTROL
  - GEOMETRY VARIATIONS POSSIBLE
  - TIGHTNESS CONTROL
- DEFORMED DISCONTINUITIES
  - ELOX NOTCH
  - OXIDE INCLUSIONS
  - GEOMETRY VARIATIONS POSSIBLE
  - MORE REPRESENTATIVE OF MANUFACTURING FLAWS
- HARDWARE WITH SERVICE INDUCED FLAWS
  - "REAL" FLAWS
  - DIFFICULT TO FIND, CHARACTERIZE

FIGURE 3

THE PRE 1969/70 APPROACH

- DESIGN AND ANALYSIS:
  - "SAFE-LIFE" FATIGUE DESIGN & ANALYSIS IS FOR SAFETY & DURABILITY

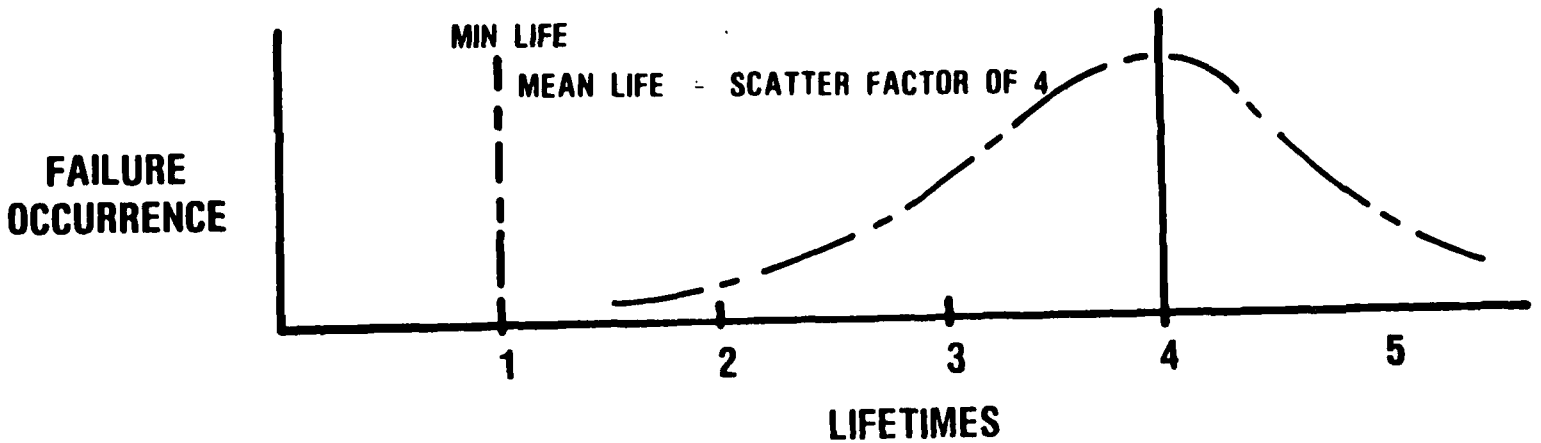

- MEAN LIFE PREDICTION
  - BASED ON UNFLAWED LAB SPEC. DATA
  - MINER'S RULE CUMULATIVE DAMAGE ANALYSIS
- SCATTER FACTOR ASSUMED TO ACCOUNT FOR:
  - EFFECT OF INITIAL QUALITY (FLAWS)
  - EFFECT OF ENVIRONMENT
  - EFFECT OF VARIATIONS IN MATERIALS PROPERTIES
- NO CRACK GROWTH ANALYSIS REQUIREMENT

FIGURE

SHORTCOMINGS OF THE PRE 1969/70 APPROACH

- IT OFTEN TIMES PROVIDED VERY POOR CORRELATION BETWEEN ANALYTICAL & TEST FAILURE TIMES AND ACTUAL SERVICE EXPERIENCE

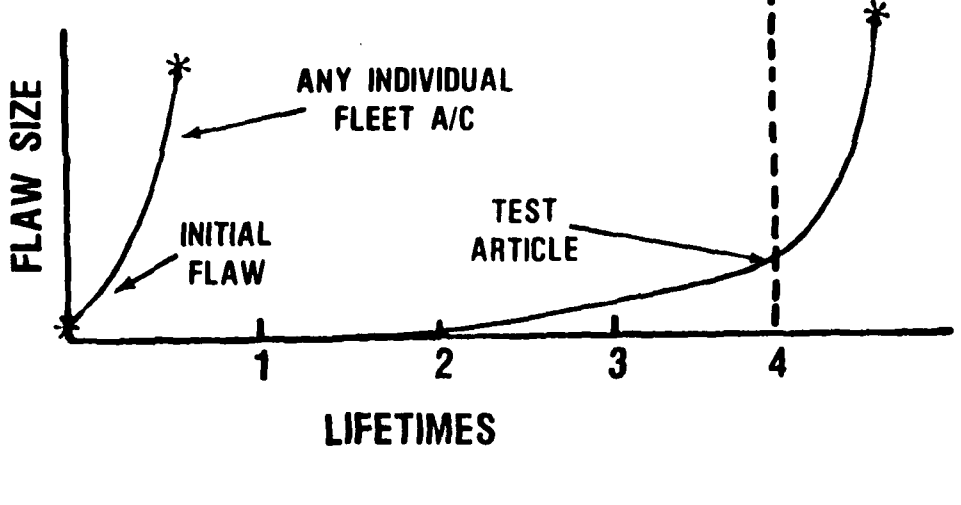

EXAMPLES	SERVICE Eλ	TEST EXP.
F-4 WING FAILURE	1200 HR	>11,800 HR
F-111 WING PIVOT	~ 100 HR	> 40,000 HR
F-5 WING	~1000 HR	~ 16,000 HR

FIGURE 5

CURRENT MIL-STD 1530A APPROACH

- **GENERAL**
  - THE "SAFE LIFE" APPROACH HAS BEEN ABANDONED & SAFETY & DURABILITY REQUIREMENTS DECOUPLED
  - SAFETY – AIRCRAFT WILL BE DESIGNED TO BE DAMAGE TOLERANT
    - FAIL-SAFE
      OR
    - SAFE CRACK GROWTH
  - DURABILITY – AIRCRAFT WILL BE DESIGNED SUCH THAT ECONOMIC LIFE > REQUIRED DESIGN LIFE

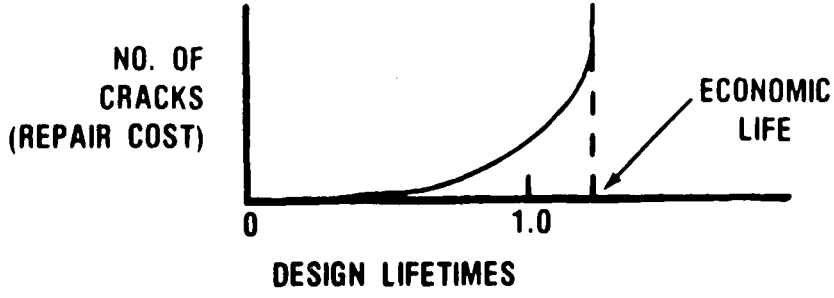

FIGURE 6

THE CURRENT MIL-STD 1530A APPROACH

- THE FAIL SAFE DESIGN APPROACH:

  THE STRUCTURE IS DESIGNED SO AS TO CONTAIN A SINGLE MEMBER FAILURE WITHOUT LOSS OF AIRCRAFT

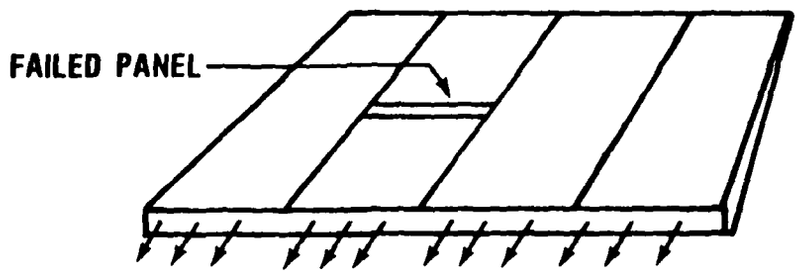

LIMITATIONS:

- REQUIRES EARLY DETECTION OF MEMBER FAILURE
- GENERALLY HEAVIER THAN SAFE CRACK GROWTH APPROACH
- FAIL-SAFETY DETERIORATES WITH ONSET OF ADJACENT MEMBER CRACKING (GENERALLY LATE IN LIFE)

FIGURE 7

THE CURRENT MIL-STD 1530A APPROACH

- THE SAFE CRACK GROWTH DESIGN APPROACH:

  THE STRUCTURE IS DESIGNED (& INSPECTED) SO THAT THE MAXIMUM EXPECTED INITIAL DAMAGE WILL NOT GROW TO CRITICAL SIZE DURING SERVICE USE

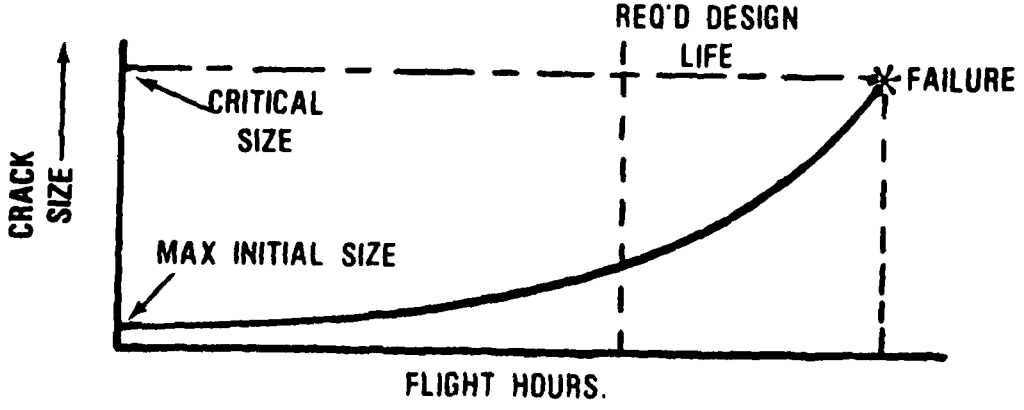

LIMITATIONS:

SAFETY DEPENDENT ON:

- FRACTURE CONTROL PROGRAM TO ENSURE NO INITIAL FLAWS > SIZE ASSUMED IN DESIGN
- INDIVIDUAL AIRCRAFT TRACKING PROGRAM
- ACCURATE IDENTIFICATION OF FRACTURE CRITICAL AREAS

FIGURE 8

ASSUMED NDI CAPABILITIES PER MIL-A-83444 "AIRPLANE DAMAGE TOLERANCE REQUIREMENTS"

Location	Safe Crack Growth		Fail Safe	
	Material Thickness (In.)	Detectable Flaw Size (In.)	Material Thickness (In.)	Detectable Flaw Size (In.)
Hole	0.050 Or Less	0.050 Thru The Thickness 	0.050 Or Less	0.020 Thru The Thickness 
Hole	Greater Than 0.050	0.050 Radius Corner Flaw 	Greater Than 0.020	0.020 Radius Corner Flaw 
Other	0.125 Or Less	0.250 Thru The Thickness 	0.050 Or Less	0.100 Thru The Thickness 
Other	Greater Than 0.125	Semicircular Flaw 0.250 Length (2c) 0.125 Depth (A) 	Greater Than 0.050	Semicircular Flaw 0.100 Length 2(c) 0.050 Depth (A) 

FIGURE 9

THE CURRENT MIL-STD 1530A APPROACH
(FULLSCALE TESTING)

- THERE HAVE BEEN A NUMBER OF CHANGES IN FATIGUE TEST POLICIES

PRE 1969/70		MIL-STD 1530A
PRODUCTION AIRCRAFT	SELECTION OF TEST ARTICLE	EARLY RDT&E AIRCRAFT
BLOCK	TEST SPECTRUM	FLIGHT-BY-FLIGHT
NO POLICY	TEST SCHEDULE	ONE LIFETIME PRIOR TO PROD. GO-AHEAD, TWO LIFETIMES (OR ECONOMIC LIFE) PRIOR TO FIRST PRODUCTION DELIVERY
4 LIFETIMES	TEST DURATION	TWO LIFETIMES (OR ECONOMIC LIFE)
NO POLICY	POST TEST INSPECTION	TEAR DOWN INSPECTION
4 LIFETIMES WITHOUT FATIGUE FAILURE	ACCEPTANCE CRITERIA	• ECONOMIC LIFE > DESIGN LIFE • MEETS DAM. TOL. REQM'TS. • MIN. FORCE MAINT. PLAN. & MIN. PROD. MODS.

FIGURE 10

ENGINE STRUCTURAL INTEGRITY PROGRAM (ENSIP)

MIL-E-XXXXX (USAF)

DEFINES

- PROCEDURES TO ASSURE ADEQUATE ENGINE STRUCTURAL CHARACTERISTICS TO PERFORM REQUIRED MISSIONS FOR SPECIFIED LIFE.

APPROACH

- SIMILAR TO AIRCRAFT STRUCTURAL INTEGRITY PROGRAM (ASIP)
- ESTABLISHES LIFE MANAGEMENT REQUIREMENTS/PROCEDURES
- EXPECTED IMPLEMENTATION - 1982

IMPACT ON INSPECTION COMMUNITY

- REQUIRES IMPROVED CAPABILITY
- REQUIRES QUANTITATIVE VALIDATION OF CAPABILITY

FIGURE 11

CONVENTIONAL APPROACH TO LIFE MANAGEMENT OF CYCLE LIMITED ENGINE COMPONENTS

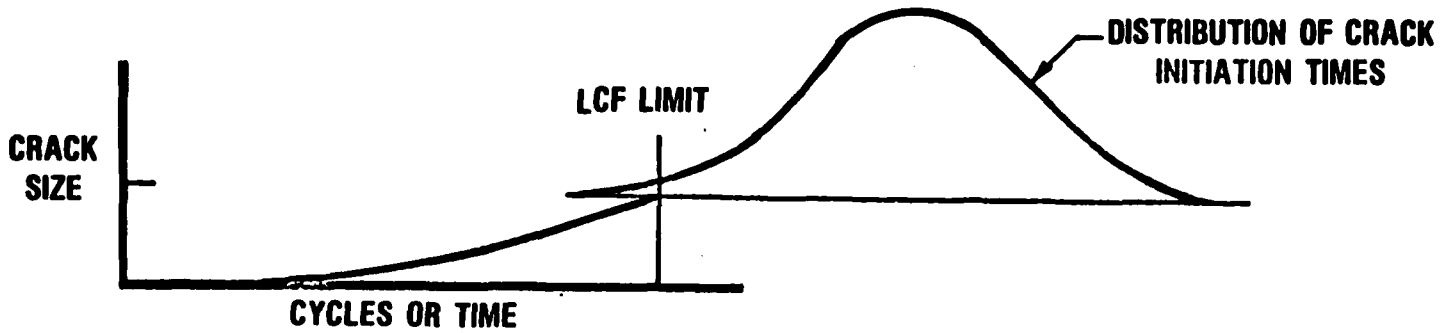

- CRITERIA: LOW CYCLE FATIGUE (LCF) LIMIT BASED ON LOWER BOUND (-3σ OR 1/1000) DISTRIBUTION OF CRACK INITIATION TIME
- ACTION: 100% PART REPLACEMENT AT LCF LIMIT
- CONCERNS:
  - NO RECOGNITION OF IMPACT INITIAL DEFECTS CAN HAVE ON TOTAL PART LIFE (PART FAILURE CAN OCCUR PRIOR TO LCF LIMIT)
  - MAJORITY OF PARTS ARE DISCARDED PRIOR TO REACHING THEIR INDIVIDUAL CRACK INITIATION TIME (AVERAGE/MIN = 5 TO 10)

FIGU · 12

G→

DEFINITIONS

- **FRACTURE CRITICAL PART:**

  A PART WHOSE FAILURE COULD JEOPARDIZE FLIGHT SAFETY

  EXAMPLES

  ALL HIGH ENERGY PARTS AND OTHERS (e.g. SELECTED BLADES AND VANES FOR SINGLE ENGINE AIRCRAFT)

- **DURABILITY CRITICAL PART:**

  A PART WHOSE FAILURE OR DETERIORATION WILL RESULT IN SIGNIFICANT MAINTENANCE BUT NOT IMPAIR SAFETY

  SHROUDS, SEALS, VANES AND OTHERS

- **CRITICAL AREAS OR LOCATIONS:**

  SPECIFIC REGIONS OF A PART WHCH ARE PARTICULARLY SUSCEPTIBLE TO CRACKING DUE TO LOCALLY HIGH STRESSES AND/OR SUSCEPTIBILITY TO DAMAGE

FIGURE 13

G→

DAMAGE TOLERANCE APPROACH TO LIFE MANAGEMENT OF CYCLE LIMITED ENGINE COMPONENTS (SAFETY LIMIT)

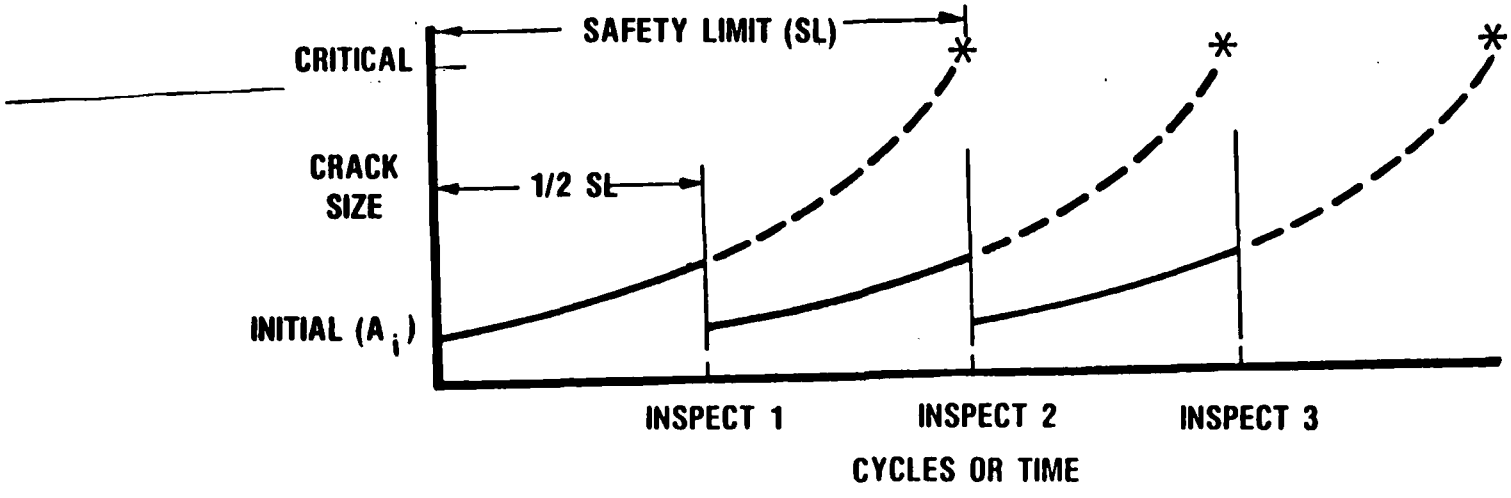

CRITERIA:

- SAFETY LIMIT IS TIME FOR INITIAL FLAW (A_i) TO GROW AND CAUSE PART FAILURE
- INSPECT AT 1/2 SL. INSPECTION INTERVAL $\geq$ 1 LT (DESIGN GOAL) OR 1 DEPOT INTERVAL (MIN DESIGN RQMT)
- APPLIES TO FRACTURE CRITICAL PARTS
- PROD. A_i BASED ON NDE METHOD OR MATERIAL DEFECT DISTRIBUTION
- DEPOT A_i BASED ON NDE METHOD

G→

FIGURE 14

INSPECTION CAPABILITY REQUIREMENTS

- DEMONSTRATION OF PROPOSED NDE METHOD WILL BE REQUIRED TO INSURE THAT THE STATED FLAW SIZES CAN BE DETECTED AT THE 90% PROBABILITY /95% CONFIDENCE LEVEL

- ASSUMED INITIAL FLAW SIZES TO BE USED IN DESIGN:
  - 0.030 INCH SURFACE LENGTH WHERE NDE METHOD IS FLUORESCENT PENETRANT
  - 0.015 INCH SURFACE LENGTH WHERE NDE METHOD IS EDDY CURRENT OR ULTRASONICS
  - 0.002 SQUARE INCH AREA FOR IMBEDDED DEFECTS UTILIZING ULTRASONICS (# 3 FBH)
  - 0.200 INCH SURFACE LENGTH AND IMBEDDED SPHERE = 0.2 x t FOR WELDMENTS

- WHEN INITIAL FLAW SIZES ARE BASED ON MATERIAL DEFECT DISTRIBUTION, SELECTED SIZE SHALL ENCOMPASS 99.99% OF THE DISTRIBUTION

TV-469

FIGURE 15

TYPICAL DISK RESULTS

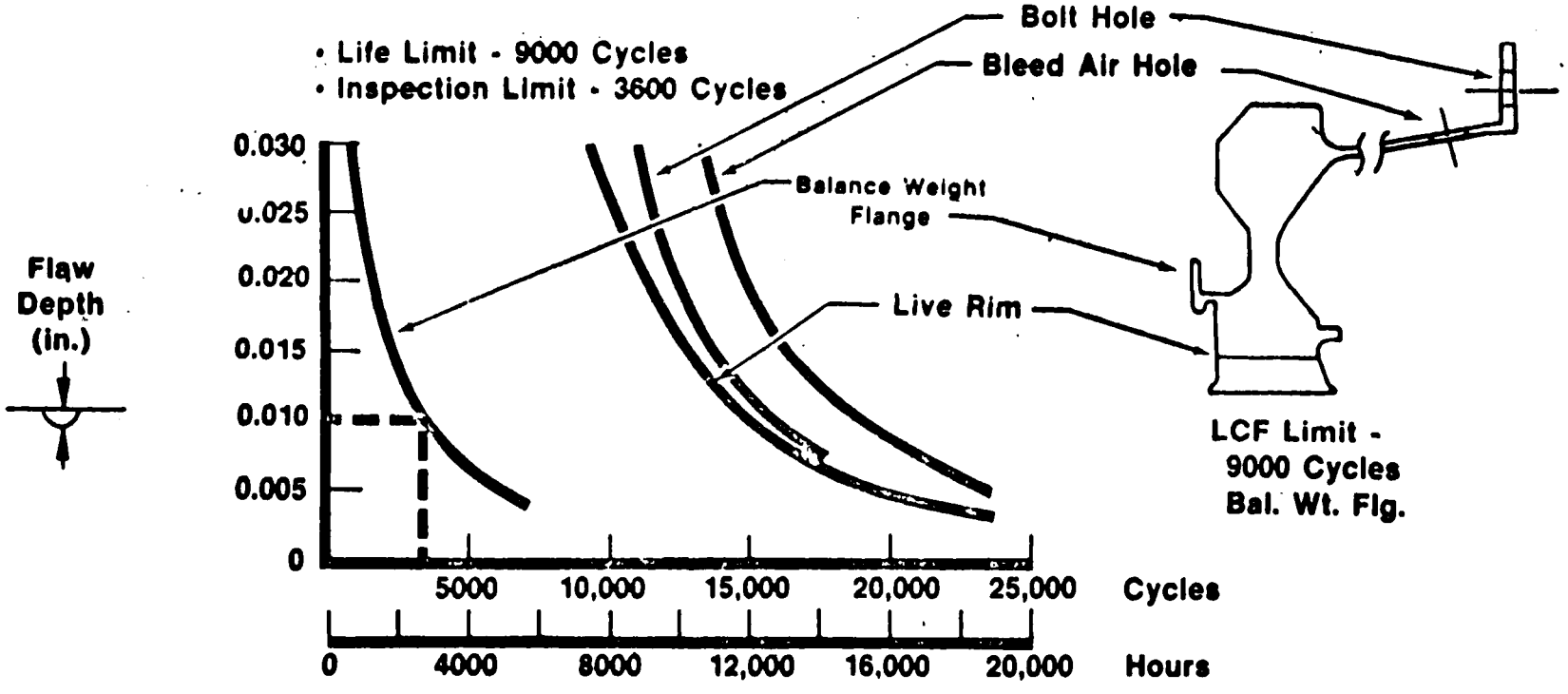

FIGURE 16

G→

F-100 SAT INSPECTION SUMMARY

REQUIREMENTS:

- INCREASED CAPABILITY FOR MANUFACTURING AND DEPOT INSPECTION OF CRITICAL COMPONENTS
- DETECTION OF SURFACE FLAWS 0.005 INCH DEEP BY 0.015 LENGTH AND LARGER IN TITANIUM - AND NICKEL - BASE ALLOY COMPONENTS

NEEDS:

- FOCUSED EDDY CURRENT INSPECTION CAPABILITY FOR MANUFACTURING, DEPOT
- IMPROVED FPI CAPABILITY AT DEPOT
- CRYOGENIC PROOF TEST FOR TITANIUM FAN COMPONENTS

ACTIONS:

- EDDY CURRENT EQUIPMENT/PERSONNEL TRAINING INCORPORATED AT DEPOT IN SPRING 1980
- PENETRANT INSPECTION AT DEPOT BEING UPGRADED
- CRYOGENIC PROOF TEST AT DEPOT TO BE IMPLEMENTED BY 1983

FIGURE 17

CAN DETECTION REQUIREMENTS BE MET?

RECENT CAPABILITY MEASUREMENT EFFORTS

- AIR FORCE AIRCRAFT STRUCTURE NDE RELIABILITY STUDY
- AIR FORCE ENGINE COMPONENT NDE RELIABILITY STUDY (CURRENT)
- MIL-STD-1530 DEMONSTRATION PROGRAM (B-1, A-10, F-15, F-16)
- F100 STRUCTURAL ASSESSMENT NDE CAPABILITY DEMONSTRATION
- OTHERS

OBSERVATIONS

- CURRENT PRACTICES NOT ADEQUATE FOR ENGINE REQUIREMENTS
- POTENTIAL FOR ADEQUACY IS THERE FOR A PRICE

FIGURE 18

IV.G. ACCELERATION OF NDE METHODS AND EQUIPMENT INTO SYSTEMS (Manufacturing, Depots, and Field)

Acceleration of the application of commercial and special nondestructive evaluation (NDE) methods and equipment to future military systems is an action which the Department of Defense (DoD) can take to significantly improve reliability, maintainability and readiness of future systems. This paper analyzes how the DoD currently introduces NDE commercial and special NDE methods and equipment into its systems, identifies impediments which exist, and makes recommendations for actions which the DoD can take to accelerate this process.

THE INTRODUCTION OF NDE METHODS AND EQUIPMENT

Existing policies governing NDE evolve from DoD-I-4155.1 (see Fig. 1) requirements for quality engineering and acceptance of commercial equipment.

During the conceptual and validation phases, initial planning is performed to identify NDE and other inspection requirements and needs for new systems. Decisions are made at this time concerning whether commercial equipment or special equipment will be used.

When commercial equipment is to be purchased, minimum essential design performance and product description requirements must be developed, and test and examinations procedures must be developed and executed to ensure conformance to military needs.

During the full-scale engineering development (FSED) phase, the planning for NDE inspection equipment is to be finalized; special NDE equipment is designed; commercial and special NDE equipment descriptions, operating instructions, calibration

QUALITY PROGRAM REQUIREMENTS FOR MAJOR SYSTEM ACQUISITION AND DEPLOYMENT

PHASE:	CONCEPTUAL	VALIDATION	FULL-SCALE DEVELOPMENT	PRODUCTION	DEPLOYMENT
MILESTONE:	0 (Program Initiation)	I (Demonstration and Validation)	II (Full-Scale Development)	III (Production and Development)	
QUALITY PHASED ACTIVITIES:	• Review approved mission [illegible] statements • Review parametric data on similar systems • Analysis for determining minimum essential quality characteristics and R&M • Develop initial QA plans • Perform (quality) assessment	• Identify and define quality (physical, technological, psychological, and time oriented) characteristics • Evaluate inhouse or contractor proposals for engineering development • Prepare contract provisions for quality during development • Identify special acceptance inspection equipment (SAIE) requirements • Prepare test equipment calibration procedures • Develop metrology and calibration plans for the product • Perform independent (quality) assessment • Update and refine quality requirements and QA plan for development	• Product [illegible] and quality engineering analysis — Identify manufacturing, special production processes, and quality control methods — Identify critical items — Develop critical item planning — Identify potential problem areas/risks — Develop SAIE • Perform design review for quality characteristics: — Initiate cost effective engineering changes — Evaluate mfg & assembly operations for ease of examination and test — Develop test procedures • Identify NATO interfaces • Prepare contract provisions for quality production • Develop transition plan to prevent degradation of quality in production • Perform independent (quality) assessment	• Establish baseline control of engr. changes and configuration • Provide for monitoring contractor or inhouse quality • Quality inputs to production • Provide for product and service quality audits • Depot maintenance work requirements • Destination-depot QA programs-product acceptance • Data feedback system with deployment • Product quality training programs-user orientation • Logistics-provisioning QA program • Update and implement QA plans • Perform independent (quality) assessment	• Monitor initially deployed system (assure user satisfaction) • Implement storage and distribution QA plans • Implement operations QA plans • Implement military service QA plans for maintenance and overhaul • Storage, [illegible] standards and [illegible] inspection instructions • Independent (quality) assessment of deployed systems and feedback system DISPOSAL • Develop phase-out and disposal plans — QA Plan — Decontamination — Sales
CONTINUING ACTIVITIES:	Assess Quality of Weapon Systems To Identify Requirements, Achievements, Needed Quality Improvements and Unmet [illegible]				
	Quality Assurance Programs for Services Procured Relative to Systems Acquisition and Deployment				
		Tailoring of Specifications, Standards, and Data Requirements Related to Quality Assurance			
		Provision of Metrology and Calibration Services			
	Quality Data Feedback and Utilization				

FIGURE 1.

procedures, and software are developed; detailed NDE procedures and requirements are prepared for specifications, drawings, depot maintenance work requirements(DMWRs), storage serviceability standards (SSSs), technical manuals (TMs), technical orders (TOs), technical bulletins (TBs), and supply bulletins (SBs); and commercial and special NDE equipment and methods are validated and applied to FSED hardware.

AN EXAMPLE: NDE METHODS AND EQUIPMENT FOR ARTILLERY METAL PARTS

During research and development at the U.S. Army Armament Research and Development Command, the most effective NDE techniques to inspect for critical cracks, piping, tears and inclusions are selected based upon the item configuration, available techniques, applicability of a particular technique, and cost analyses.

Projectile shells are evaluated in approximately 30 locations (with emphasis on the high stress locations) to determine the stress profiles for each worst case environment. Through fracture mechanics, the critical crack size for each location on the shell is determined from the stress profiles using the worst case fracture toughness. Following determination of critical crack sizes, a hydrotest stress profile is constructed and the crack size that is always removed by hydrotest is determined using the worst case fracture toughness.

An evaluation of the potential for certain types of defects to occur during forging or heat treatment, the nonstructural safety hazard established by a defect (primary explosive interface), and the tasks to implement the inspection process are evaluated to determine if it is necessary to invoke minimum acceptable quality standards. Generally, a minimum acceptable quality standard is used when it is smaller than the critical flaw size.

Destructive testing of some items is performed to assure that the NDE is reliably identifying all critical and process flaw

sizes. Complete NDE data is made available on any project that passes or fails ballistic and drop tests. The NDE and ballistic data is analyzed to determine the optimum NDE system for production.

Recent trends have emphasized total coverage of the projectile shell by two NDE methods, usually hydrotest and ultrasoncis (ultrasonics is occasionally applied also). Figures 2, 3, and 4 depict the available and emerging NDE techniques. Figures 5, 6, and 7 depict the basic principles behind three innovative developmental NDE techniques which are being cnsidered for future applications.

Calibration standards are designed depending on the test method selected.

Equipment design parameter specifications are prepared as envelop "drawings" to guide the item contractor to design and fabricate or procure the commercial or special NDE equipment. The envelope drawings may suggest equipment suppliers. Before fabrication, the ARRADCOM Product Assurance Directorate approves the design of the equipment.

Qualification requirements are specified in the TDP to indicate the amount and kind of testing to which the commercial or special NDE equipment will be subjected before it is approved for use in production. This normally includes passing the "reject" calibration standards through the equipment after the equipment is calibrated, using the procedures developed for production, and assuring that the standards are rejected every time. Additionally, the equipment is required to function properly while a specified quantity of items is inspected. For applications involving integration into an automated production line, a reliability, availability and maintainability (RAM) demonstration is required.

61/1-23

Available NDT Techniques — Currently Applied

METHOD	CHARACTERISTICS DETECTED	ADVANTAGES	LIMITATIONS
VISUAL/ OPTICAL	SURFACE CHARACTERISTICS SUCH AS FINISH, CRACKS ETC.	• LOW IN COST • EASY TO USE	• LIMITED TO SURFACE INSPECTION ONLY • VISUAL IS INSPECTOR DEPENDENT
MAGNETIC PARTICLE	LEAKAGE OF MAGNETIC FLUX CAUSED BY SURFACE OR NEAR SURFACE DEFECTS	• EASY TO USE • INEXPENSIVE • SIMPLE IN PRINCIPLE • CAN BE AUTOMATED	• MATERIAL MUST BE FERROMAGNETIC • SENSITIVE TO COSMETIC FLAWS • DEMAGNETIZATION REQUIRED
ULTRASONICS	CHANGES IN ACOUSTIC IMPEDANCE CAUSED BY CRACKS, NONBONDS, ETC.	• EXCELLENT FOR CRACK DETECTION • SENSITIVE TO SUBSURFACE DEFECTS • READILY AUTOMATED	• REQUIRES COUPLING OR LIQUID IMMERSION • REQUIRES SKILLED OPERATOR • COMPLEX GEOMETRIES DIFFICULT TO ANALYZE
EDDY CURRENT	CHANGES IN ELECTRICAL CONDUCTIVITY OR MAGNETIC PERMEABILITY CAUSED BY MATERIAL VARIATIONS, CRACKS, VOIDS, ETC.	• HIGH SPEED, NON CONTACT • READILY AUTOMATED	• LIMITED DEPTH PENETRATION • ONLY GOOD FOR CONDUCTIVE MATERIALS
HYDROSTATIC	DECREASED STRENGTH OF MATERIAL CAUSED BY PRESENCE OF CRACKS, VOIDS, ETC.	• EASY TO USE • DIRECT MEASUREMENT OF STRENGTH • INEXPENSIVE	• GEOMETRY LIMITS EFFECTIVENESS • TEST PERFORMED AT ROOM TEMPERATURE

Figure 2.

Available NDT Techniques – Not Applied

METHOD	CHARACTERISTICS DETECTED	ADVANTAGES	LIMITATIONS
RADIOGRAPHY (X RAY & GAMMA)	CHANGES IN FILM DENSITY FROM VOIDS, MATERIAL VARIATIONS	• PROVIDES PERMANENT RECORD ON FILM • CAN BE USED TO INSPECT WIDE RANGE OF MATERIALS AND THICKNESSES	• RADIATION SAFETY REQUIRED • NOT READILY AUTOMATED • EXPENSIVE • TRAINED OPERATORS REQUIRED • INEFFECTIVE FOR CRACK DETECTION
LIQUID PENETRANT	SURFACE OPENINGS DUE TO CRACKS, POROSITY, ETC.	• INEXPENSIVE, EASY TO USE • RESULTS EASY TO INTERPRET	• LIMITED TO SURFACE DEFECTS • NOT USEFUL ON POROUS MATERIALS • SENSITIVE TO COSMETIC FLAWS • INSPECTOR DEPENDENT
ACOUSTIC EMISSION	EMISSION OF SOUND WAVES FROM CRACKS AS MATERIAL IS STRESSED	• CONTINUOUS MONITORING POSSIBLE • MACROSCOPIC TEST	• ANALYSIS OF DATA COMPLICATED • REQUIRES STRESSING BRITTLE STEELS TO VERY NEAR BREAKPOINT
ACOUSTIC ANALYSIS	EMISSION OF SOUND WAVES FROM ITEM AS MATERIAL IS STRUCK	• MACROSCOPIC TEST • EASY TO USE	• ANALYSIS OF DATA COMPLICATED • CORRELATION WITH FLAWS DIFFICULT
INFRARED/ THERMAL	VARIATIONS IN TEMPERATURE CAUSED BY CRACKS, NONBONDS, POROSITY	• NONCONTACT • CAN BE AUTOMATED • CONTINUOUS MONITORING POSSIBLE	• PRECISE CONTROL OF HEAT & TEMPERATURE REQUIRED • EXPENSIVE
NEUTROGRAPHY	VARIATION IN NEUTRON ADSORPTION RATE CAUSED BY MATERIAL VARIATION, DEFECTS, ETC	• SENSITIVE TO LOW DENSITY MATERIALS, (E.G. PLASTICS) • PROVIDE PERMAMENT RECORD ON FILM	• VERY SLOW • EXPENSIVE • RADIATION SAFETY REQUIRED
MICROWAVE	REFLECTION AND SCATTERING OF WAVES BY FLAWS	• NONCONTACT • ABILITY TO PENETRATE LARGE MASSES OF NON-METALLIC MATERIAL	• CORRELATION OF SIZE OF FLAW AND SCATTERED RADIATION DIFFICULT • APPLICATION TO METALLIC MATERIALS ESSENTIALLY SURFACE INSPECTION

Figure 3

Status Summary of NDT Techniques

TECHNIQUE	TECHNOLOGY AVAILABLE	APPLICATION AVAILABILITY		AUTOMATIC DECISION	COMMENTS
		EQUIPMENT	RELIABILITY DATA		
ULTRASONIC	YES	PRESENT	FY79	YES	FIRST APPLICATION M549
MAGNETIC PARTICLE	YES	PRESENT	——	NO	WILL BE PHASED OUT WHERE POSSIBLE
EDDY CURRENT	YES	PRESENT	FY79	YES	
HYDROSTATIC	YES	PRESENT	——	NO	
VISUAL	YES	PRESENT	——	NO	WILL BE PHASED OUT BY AUTOMATION
OPTICAL	YES	FY80	FY81	YES	TO BE USED FOR INTERNAL CAVITY
MAGNETIC FLUX LEAKAGE	NO	FY80	FY81	YES	ANTICIPATED FIRST APPLICATION M483A1
EMATS	NO	FY81	FY82	YES	ANTICIPATED FIRST APPLICATION M549
SHIELD	NO	FY83	FY84	YES	ANTICIPATED FIRST APPLICATION M483A1

Figure 4

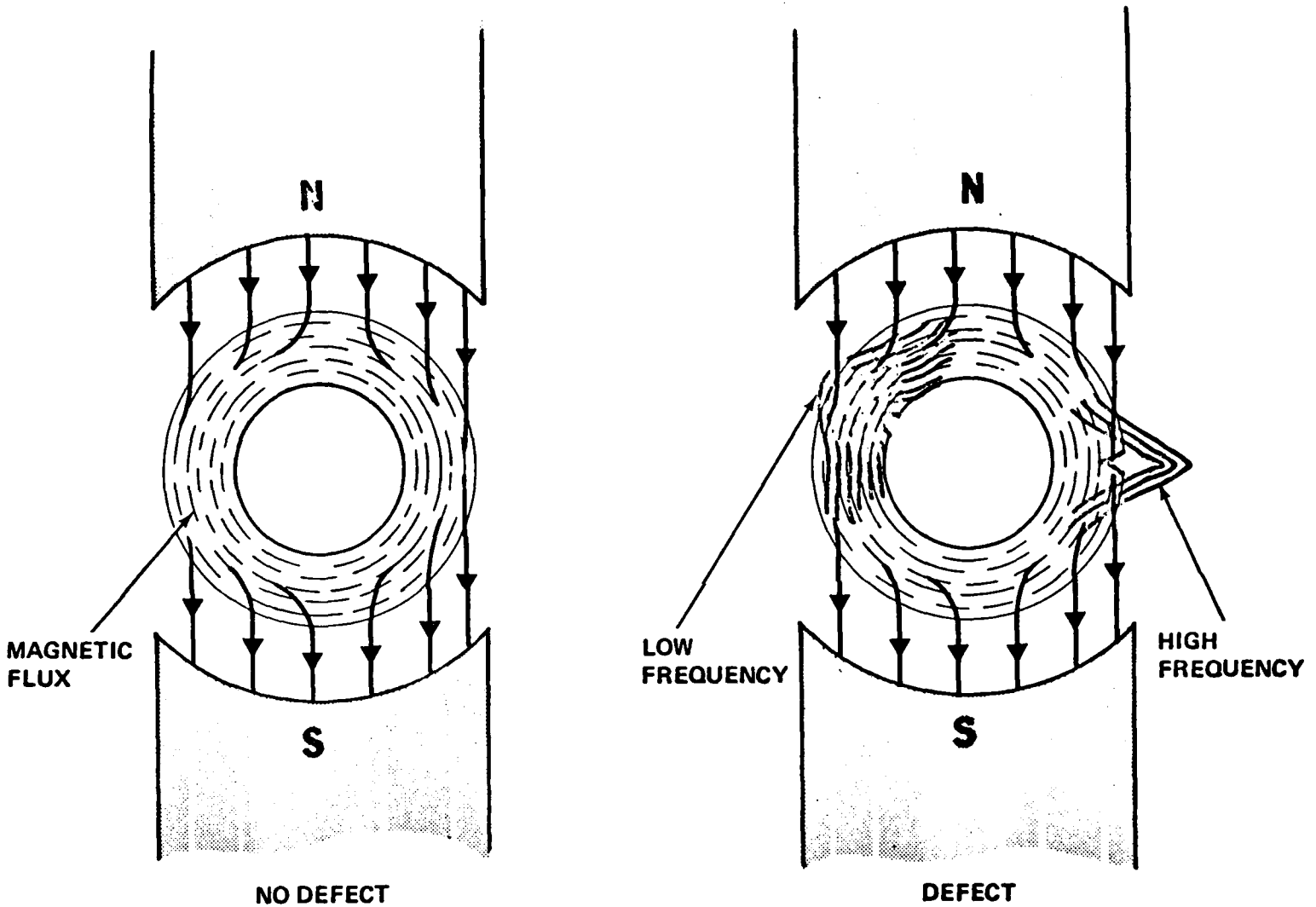

Figure 5

Magnetic Flux Leakage, Basic Principles

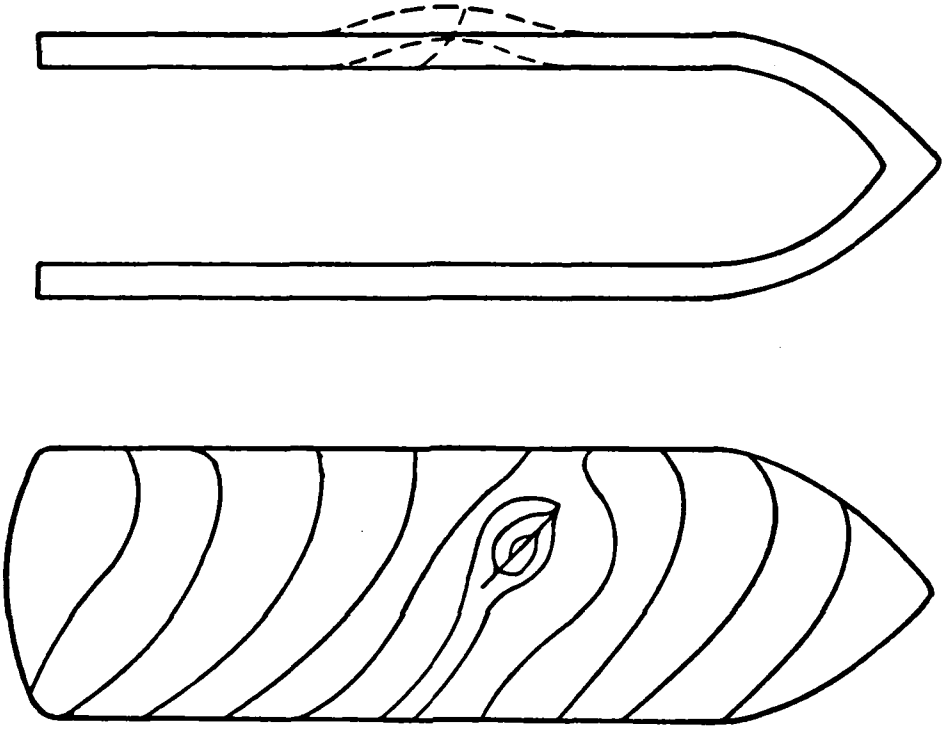

Principles of Double Exposure Holographic Inspection

Figure 6

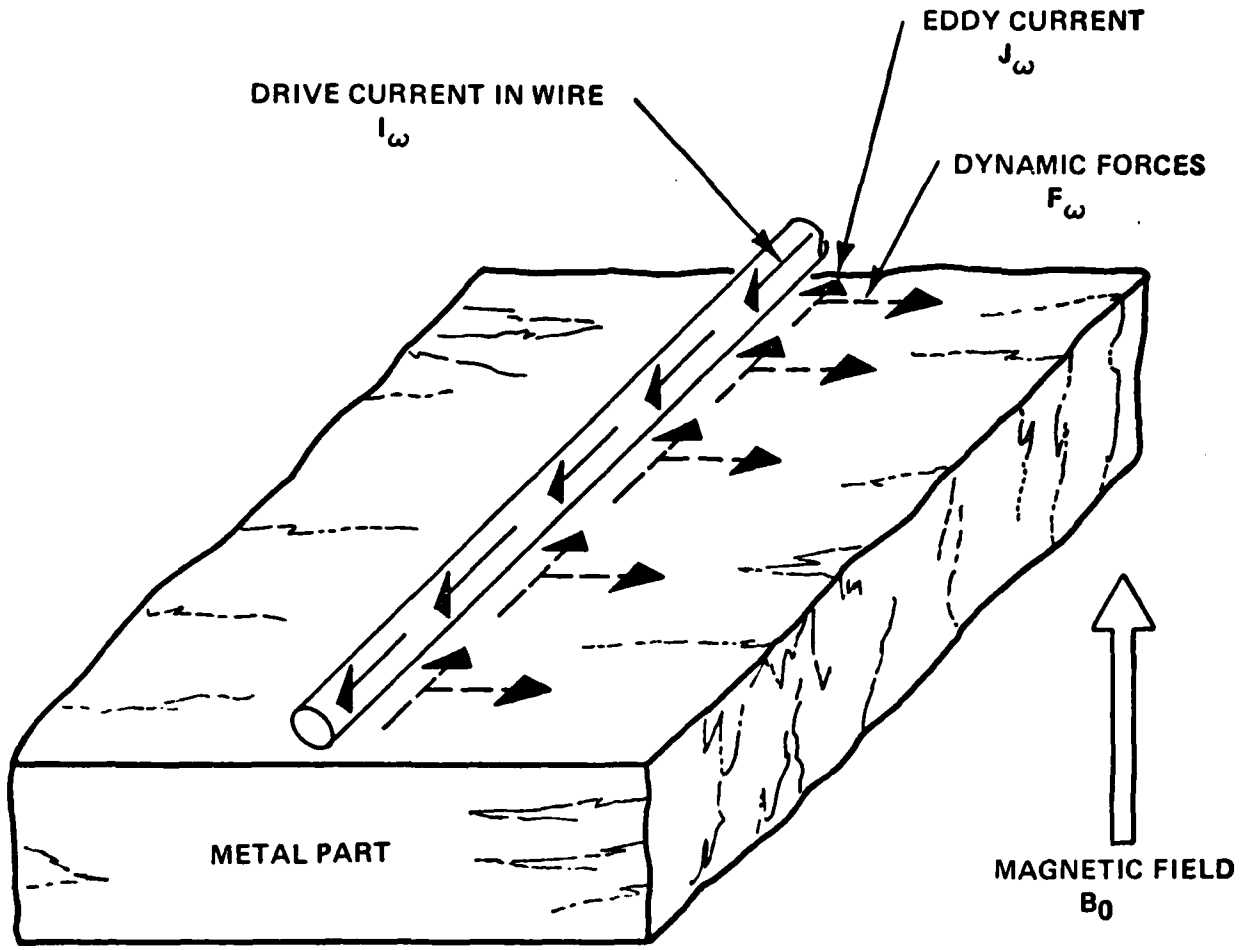

LORENTZ FORCE
(AS IN ELECTRIC MOTOR)

$$\vec{F}_\omega = \vec{J}_\omega \times B_0$$

Figure 7.
Electromagnetic Acoustic Transducer Systems (EMATS) Basic Principles

When the TDP for an R&D projectile is released, the NDE TDP is released at the same time. If an existing projectile TDP is to be amended by the addition of a new NDE procedure, this is accomplished by release of an engineering change proposal (ECP) though formal configuration management.

Such NDE activities during projectile development not only assure that the most effective NDE methods and equipment are used, but also allow for timely development (see Fig. 8), application and facilitation (see Fig. 9) of new and improved NDE methods and equipment.

AN EXAMPLE: INTRODUCTION OF COMMERCIAL NDE METHODS AND EQUIPMENT INTO NUCLEAR-POWERED SUBMARINES

Extensive use of commercial NDE equipment is used by the Naval Sea Systems Command to help achieve their goal of extending the time between overhaul of nuclear-powered submarines to 12 years.

The preferred approach is to find existing equipment in the market place which promises to meet the Navy's needs, evaluate the equipment in the laboratory with the results provided to the equipment producer, and, if sufficiently promising, a field evaluation is conducted with the results provided to the producer. If no equipment is found in the market place which promises to meet the Navy requirements, but equipment exists which is similar, the Navy attempts to work with the producer to have modifications made to the equipment so that it meets Navy requirements. If neither approach is feasible, then new equipment is developed.

To obtain a nonintrusive flow-meter which utilizes ultrasonic principles to measure flow inside pipes, the Navy offered producers of promising equipment the opportunity to have their equipment evaluated in a Navy laboratory. Controlatron Corporation offered their equipment on loan to the Navy; the flow accuracy was

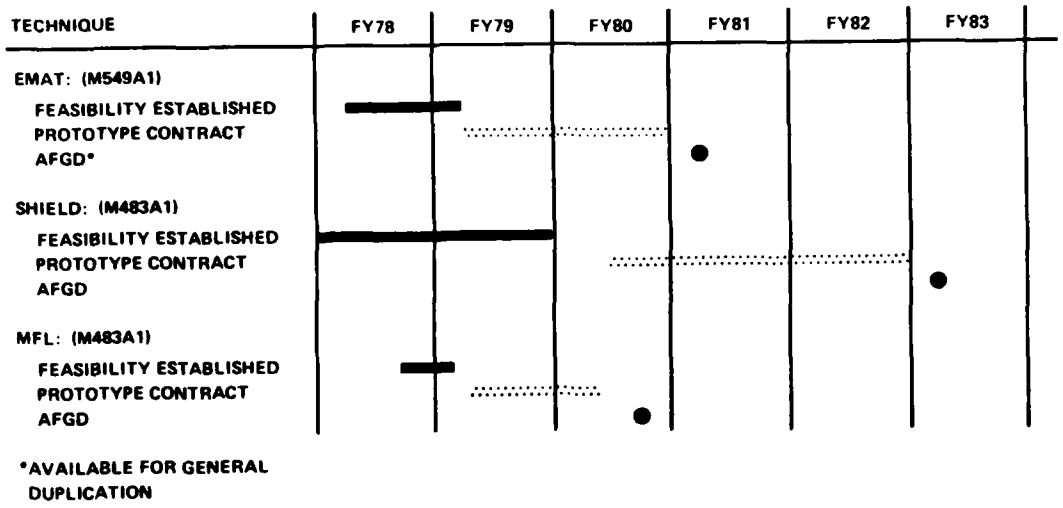

FIGURE 8. Projected Availability of Pending NDT Techniques

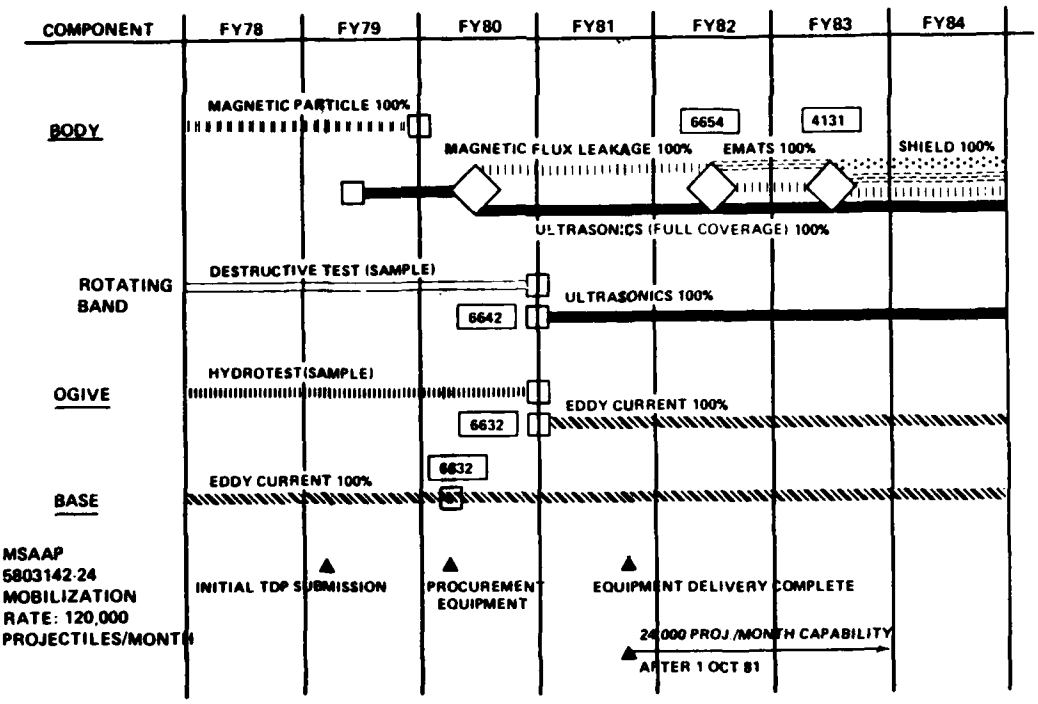

FIGURE 9. Mississippi AAP - Facility for Projectile, 155 mm, M483A1

evaluated against Navy specifications. Other equipment producers balked against the evaluation in a Navy laboratory. The recommendations for modifications to meet Navy requirements were incorporated into the design.

Another equipment producer, later, offered its equipment for Navy laboratory evaluation, but the producer did not act on the recommendations and this equipment could not meet the specifications when the Navy competitively procured equipment for the field evaluation. Recommendations for modification of the Controlatron equipment resulting from field evaluation were incorporated into the design because they enhanced the value of the equipment in the commercial marketplace.

IMPEDIMENTS TO THE EFFECTIVE, EFFICIENT AND TIMELY APPLICATION OF NDE METHODS AND EQUIPMENT

Within the DoD, most weapon system development programs do not provide for the efficient, proper or timely application of NDE methods. The reasons for such can be gleaned from the "Report of the U.S. Army Development and Readiness Command Nondestructive Testing Review Group--Dr. E. S. Wright, Chairman," dated April 1979. Although this study surveyed the U.S. Army and defense contractors, findings related to the acceleration of NDE methods and equipment into systems are believed to be applicable to all services within the DoD.

Commodity commands and program managers and their contractors have the responsibility and authority to apply commercial and special NDE equipment and methods to systems. However:

- Command postures with respect to NDE vary from substantially adequate to decidedly less than adequate.

- Commands' role in coordination, involvement, decision, and control of requirements in TDPs, TMs, TBs, TOs, SSSs, DMWRs, and SBs vary from complete involvement to practically none whatsoever.

- NDE is generally considered late in design and development and often only after specific reliability and safety problems emerge.

- Command laboratories have at best deep expertise in only a narrow range of NDE technology. At worst, some laboratories have essentially no genuine expertise in NDE.

- At only one command (U.S. ARRADCOM) is overall structural integrity planning required (reference: ARRADCOM-R 70-7 "Fracture Mechanics in Development and Production of Ammunition"), although AF MIL-STD-1530, "Aircraft Structural Integrity Program, Airplane Requirements") can accomplish the same for select programs.

- With few exceptions, NDE requirements in TDPs, DMWRs, SSSs, TMs, TOs, TBs, and SBs are not based on rational, quantitative, and systematic correlation of nondestructively determined characteristics of a material or component with its performance in service. In this respect, command practice is significantly behind available state-of-the-art in coupling with NDE fracture/failure mechanics, wear, fatigue, remaining-life-prediction, and flaw tolerant design.

61/1-26

- Although contractors generally have good posture in NDE personnel qualification and certification in the practice of standard NDE methods, contractors make little use of advanced NDE methods either for inspection or process control. There exists a clear gap in transitioning advanced methods into practice.

- Although many contractors are notably aware of and concerned with NDE advancements, contractors perceive seemingly little incentive in the procurement process for investing in exceptional NDE capabilities.

- Appreciation and use of NDE varies. Some contractors use NDE extensively from material characterization and acceptance of end items to almost no appreciation for NDE. Some are extremely well organized and advanced in the research, development, appreciation and use of NDE.

- NDE is generally not effectively used in manufacturing process control. Reliance on manually operated equipment requiring operator judgement in accept/reject decisions is exceptional. Little use is made of advanced, state-of-the-art, automated equipment with computerized accept/reject decision making.

Factors were also reported which could be used to facilitate the application of new or improved NDE methods and equipment, specifically:

- Both the Army Materials and Mechanics Research Center and the Air Force Wright Aeronautical Laboratories have broad spectrums of NDE capability and substantial equipment and personnel dedicated to NDE, along with adjunct skills in metallurgy, ceramics, organics, and composites and the related areas of failure analyses, fracture mechanics, etc.

- Command and industrial NDE, R&D projects are generally appropriate and technically credible. Communication and coordination mechanisms exist to link this research.

When new or improved NDE equipment has been applied, difficulties have been experienced which result from late deliveries of the equipment, post installation adjustments at production facilities or field, insufficient quantity of the product to test to prove out the equipment, weak liaison between the system prime contractor andd the subcontractor NDE fabricator, insufficient support documentation, insufficient support and direction from the government or prime contractor engineering departments, and changing government requirements.

FUNDING

A survey of the funding for NDE was accomplished as a tasking of the Joint Logistics Commanders (JLC) to the Joint Technical Coordinating Group (JTCG) for Nondestructive Inspection. The results are as follows:

NDE PROJECTED EXPENDITURES (FY84)
(in millions of dollars)

COST CATEGORY	ARMY	NAVY	AIR FORCE
MANPOWER (in man years)	151	1542	1890
R&D			
6.1	.500	.135	1.244
6.2	.700	.630	2.400
6.3A	.375	.000	.230
6.3B	.250	.000	.000
6.4	.620	.060	.000
6.5	.749	---	----
O&M	3.062	4.562	9.018
PROCUREMENT/ MILITARY CONSTRUCTION	7.069	2.416	12.860

As can be seen above, certain gaps exist in the R&D funding in some services. This results in new technology being developed as part of the DoD technology base, but to be applied to DoD systems this technology must be picked up by industry and incorporated into commercial equipment. Closing these 6.3/6.4 funding gaps would enable advanced NDE methods and equipment to be more directly adapted to military systems.

61/1-29

RECOMMENDATIONS

To overcome the barriers associated with and accelerate the application of new or improved commercial and special NDE methods and equipment into military systems during manufacturing, depot operation or field maintenance, the following recommendations are made:

- That the DoD establish a policy requiring the consideration of NDE from the onset of each weapon systems development (the JLC has tasked the JTCG-NDI to specify a method so that this is accomplished), the consideration of structural integrity along the lines of ARRADCOM-R 70-7 (Fracture Mechanics in the Development and Manufacture of Ammunition) and AF MIL-STD-1530 (Aircraft Structural Integrity Program, Airplane Requirements), and the establishment of NDE inspection programs similar to MIL-I-6870 (Inspection Program Requirements, Nondestructive for Aircraft and Missile Materials and Parts).

- That design audits be performed to insure development of a structural integrity program for the entire life cycle of each weapon system.

- That Services support budget requests to close gaps which currently exist in NDE funding.

61/1-30

IV.H. DEVELOPING AND EMERGING NDE AREAS

Included in this discussion of developing and emerging NDE areas are not only those techniques which are truly emerging, in the sense that they are new physical measurement methods which have not previously been used for classical NDE, but also developmental improvements in methods which have been used previously. An example of the former is photothermal imaging, while an example of the latter is high-resolution real-time x-ray imaging. No attempt has been made to list all possible techniques, but selection has been made of those techniques which appear to have the highest promise of return on investment toward reducing maintenance costs and increasing reliability in DoD systems for the near future.

X-RAY

High resolution real-time imaging includes the use of new high resolution screens being developed in industry along with slit scanners utilizing fluorescent coatings coupled to fiber optic bundles. The use of fluorescent fiber optics coupled to image intensifier tubes has also been proposed. New developments in this area can permit high sensitivity detection without the normally associated loss in resolution. The need for improvements in imaging devices is necessary for the development of automated x-ray inspection systems. With higher resolution imaging devices, signal digitizing, and computer processing and storage, film can be eliminated, removing a major inspection cost and storage problem.

Computerized axial tomography is a method of image reconstruction utilizing multiple images. These images are then processed to form a digital image of a slice perpendicular to the axis of the object. While utilized primarily in the medical area this technique has the potential to supplant film radiography

in industrial application. With the continued improvement in small dedicated computer systems practical industrial tomography becomes feasible. The Navy is developing such a system to inspect the Trident missile rocket motor. With a resolution of 10 mil. this system will be able to adequately meet inspection criteria. For mass produced items the time for reconstruction becomes a problem. Research is proceeding to reduce this reconstruction time. Usually the image formed is two dimensional. Work to create three-dimensional reconstruction in real-time is being carried out in DARCOM. Three-dimensional real-time reconstruction could replace flash radiography as the means for imaging munitions in flight. Computer axial tomography has wide application within the industrial area.

Diffraction Topography: X-ray diffraction topography is a technique extremely useful for assessing the quality of bulk single crystals. Particular advantages of this technique is realized when coupled with high flux X-ray beams from synchrotrons. This technique has found wide practical usage in Japan, Europe, and Russia for inspection of electronic materials such as silicon wafers and optical materials such as solid state laser rods.

Rapid Residual Stress Determination: Properly applied X-ray diffraction techniques can accurately determine near surface stress (strain) characteristics of crystalline materials. Research is ongoing to correlate these measurements with internal stress characteristics. Work has been proposed to directly measure internal stress distributions at greater depths by using high energy X-ray sources. This technique might be used for measuring stresses in gun tubes.

Automated Compton Scattering Techniques can be used to characterize defects such as voids, cracks and porosity and measure density in material. Instead of measuring transmitted radiation as is done in normal X-ray techniques the scattered radiation at different angles from incidence is measured. Relating these measurements to existing X-ray specifications must be carried out before full implementation can be realized. This technique shows promise of being utilized to inspect all large caliber Army munitions.

ACOUSTIC:

Rapid Residual Stress Determination: Measurement of ultrasonic wave velocities in materials containing residual stresses affords the possibility of rapid determination of the magnitude and sign of these stresses both in surface layers and in the bulk. The major problem to be overcome is the fact that material anisotropy, e.g. metallurgical texture, can cause larger changes in ultrasonic wave velocities than residual stresses and therefore methods must be devised to compensate for this effect. Several methods have been proposed, but none fully developed for field application.

Laser Beam Ultrasound Generation and Detection: Laser beam ultrasound generation and detection affords the opportunity to make truly non-contact ultrasonic measurements. Incorporation of scanning techniques would greatly increase the capability of testing large structures without the present necessity of either immersing the test object in a water tank or using water squirter coupling. In addition measurements can be made on hot bodies and in hostile corrosive environments. Laser beam detection can also be used for acoustic emission monitoring in similar environments and on moving bodies such as turbines. More work

needs to be conducted on both the generation and detection techniques as well as scanning methods for optimization as far as size, cost, and ruggedness for field operations.

OPTICAL:

High Resolution Optical Holographic Interferometry: Current optical holographic interferometric techniques routinely measure surface displacements of test objects only to one-half the wavelength of the laser light used (approximately 3000 Angstrom for helium-neon). On the other hand optical laser beam interferometric point probes routinely measure surface displacement of test objects to better than a fraction of an Angstrom. Use of different wavelength lasers for recording and viewing holographic images coupled with electronic signal processing affords the possibility of permitting large field of view optical holographic interferometry to approach the sensitivity of the point probe techniques.

Fiber Optic Sensors: Fiber optic technology has markedly advanced in recent years due primarily to developments in communication technology. In addition to this application fiber optic sensors have been used to detect pressure and temperature changes and acoustic waves. A promising area of application is for permanent assessment of the structural integrity of relatively large composite structure such as airframes by embedding optical fibers in the initial composite lay-up and after assembly either continuously or periodically monitor the transmission of light through the fiber.

THERMAL:

High Resolution Infrared Imaging: Despite the long wavelengths, relative to visible light, and absorption properties of infrared radiation it is highly desirable to encourage

development of devices or techniques to permit viewing and recording of infrared image with higher resolution than available for NDE applications at present.

Vibrothermography: Application of mechanical vibrations to composite materials and structures results in the development of heat at a variety of defects. Simultaneous infrared scanning permits detection of these defective regions. The extension of this technique to a higher resolution portable system for field applications would be most desirable. Such a system could be used for testing all aircraft composite structures.

Photothermal Imaging: As initially developed, photothermal imaging is a technique where laser beam scanning of a test object placed in a closed gas filled container causes changes in the gas pressure in the container in direct proportion to thermal property changes in the surface layers of the test object. Recording of the pressure changes as a function of position of the laser scan beam permits imaging of surface and sub-surface defects in the test object. More recent developments have permitted elimination of the gas filled container, by use of a second laser beam which either detects surface displacements of the test object due to localized thermal expansion or changes in the refractive index of the air just above the heating laser beam (Mirage Effect).

NUCLEAR:

Nuclear Magnetic Resonance examines the hyperfine structure of electron orbits which is due to the interaction of the electron magnetic dipole moment with the magnetic dipole moment of the atomic nucleus. Characteristic radiation is given off by different atoms. In addition, different relaxation times, i.e. the time for the atom to decay to its normal state, are also

definite attributes of the atoms. Using this information images of an object can be formed. The technique cannot be used for explosive encased in steel bodied shell; however, beakers such as the Navy produces for the 5"-54 round can be imaged before it is covered by the steel body. In addition, rocket motor propellant billets could be imaged using this technique.

Electron Spin Resonance is again the measurement of electronic structure within atoms. These measurements can be used to determine stresses in material since electronic structure in solids in dependent on the interaction between atoms. Differences in atomic spacing change electronic energy states. Therefore this measurement can be related to stress.

Mössbauer Spectroscopy gives very accurate determination of energy levels in solids. Photons emitted by isomeric states are absorbed by the equivalent atom in a solid. The recoil of the atom is distributed throughout the solid so that there is no Doppler shifting of the energy state. Therefore, very accurate determination of energy levels can be made. Quantum energy states can be related to solid structure and is therefore sensitive to strain within the solid. However, radioactive isomers are necessary with energy levels very close to that of the test item.

Positron Annihilation can be used to determine stresses in material. The positron is the antiparticle associated with the electron. When an electron and positron having the same quantum numbers meet, they destroy each other emitting two gamma rays. Positrons will have a different decay rate in a solid with many dislocations than in one with a smaller number. Dislocations can be related to internal stresses.

63/4-6

New digital processing techniques or, more generally, image processing techniques are being developed to enhance signals so that important defect information can be extracted. Subtraction, integration and Fourier decomposition are already utilized to extract information from noise. New areas to be explored are inverse scattering problem, S matrix analysis, statistical inference techniques and other types of data filtering. In addition, the machines available to do these more powerful techniques are becoming more readily available and less costly. In addition, this area has the potential of wider applicability since the image processing techniques developed can be utilized for radar, eddy current, ultrasonic and gamma ray imaging.

As an example of how the digital data processing can help save money the appended economic analysis shows that a completely automated X-ray inspection for mortar warheads saves $438,000 per year with an ROI of 14 percent. The system would consist of a real-time imaging front end connected to a digital image processing system to analyze the signal. Automated accept/reject decision making along with the material handling subsystem are parts of the system. The benefits beyond the cost savings are increased reliability, repeatability and consistency of specification interpretation.

Digital data processing (image processing) is the most important of the areas discussed. Application of these processing techniques across the whole spectrum of NDE will make automation possible. We recommend that the automation of the decision making process and the classification of defect varieties be given high priority.

Other areas that appear to have high payback in the near-term are:

1. Automatic Compton Scattering Inspection Systems - Large Caliber Munitions and Density Gauging
2. High Resolution Imaging Devices - Mortars

63/4-7

3. Laser Generation of Ultrasound and Acoustic Emission Detection - non-contact metal parts inspection
4. Photothermal Imaging - IC chips, subsurface flaws in metals, coatings
5. NMR Imaging - Imaging Rocket Motor Propellant, Bare Explosive Beakers, Homogeneity of Track Pad Rubber.

In addition to the NDE areas described above, other areas have been developed extensively but have not been widely utilized. These areas are listed below with the areas where they might be applied.

Acoustic:

New Piezoelectric Acoustic Emission Detectors - Weld Monitoring
Electromagnetic Acoustic Transducers - Metal Parts Integrity
Ultrasonic Computerized Tomography - Crack Detection in Metal Parts, Crack in Airplane Structure

Electric and Magnetic:

AC Impedance - Corrosion
Magnetometer - Corrosion
Barkhausen (Electrical and Magneto Acoustics) - Residual Stresses
Capacitance Hole Probe - Cracking in Bolt Holes

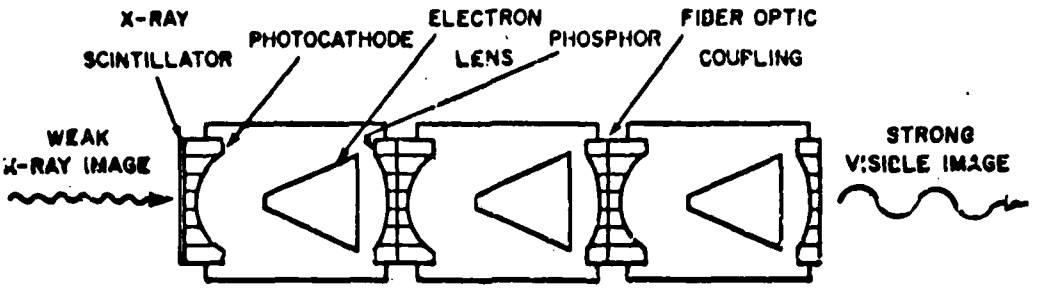

PORTABLE IMAGE X-RAY INTENSIFIER

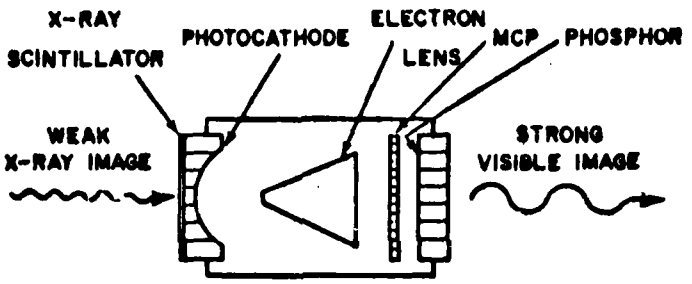

MINIATURE IMAGE X-RAY (MINIX) INTENSIFIER

NEW DEVELOPMENTS IN X-RAY IMAGE INTENSIFIERS

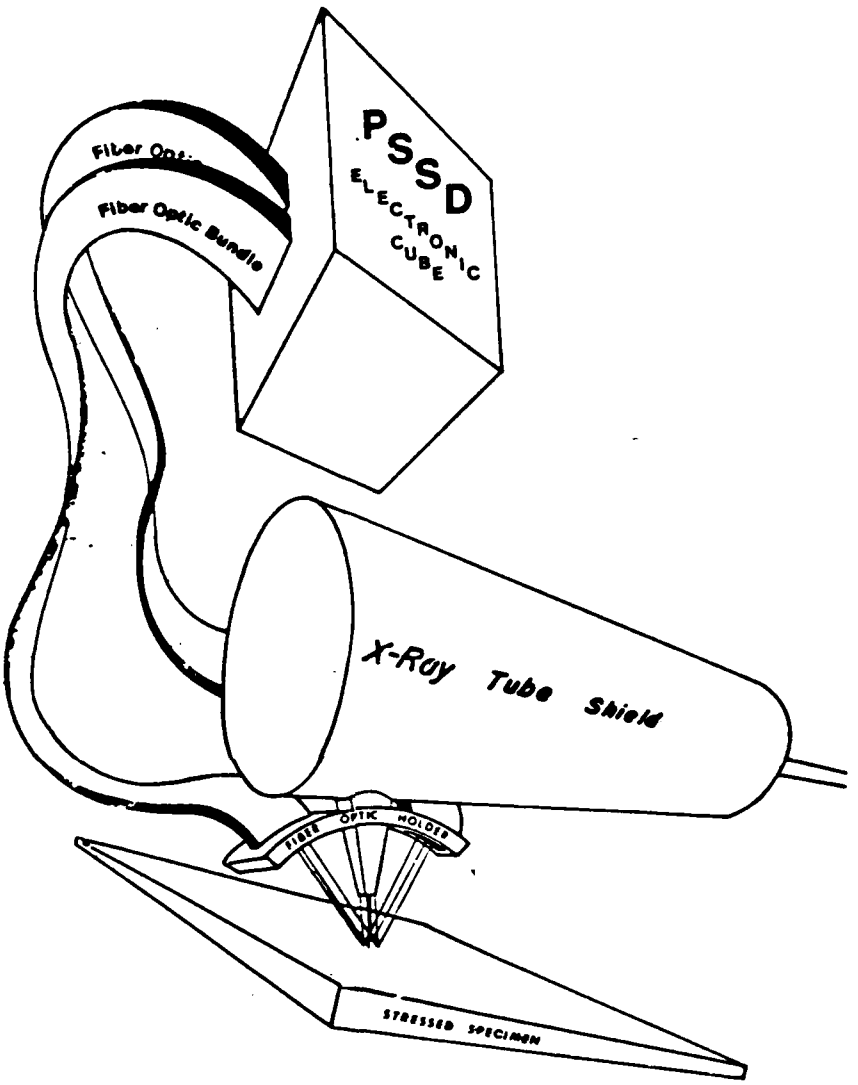

RAPID X-RAY DIFFRACTION RESIDUAL STRESS (STRAIN) DETERMINATION

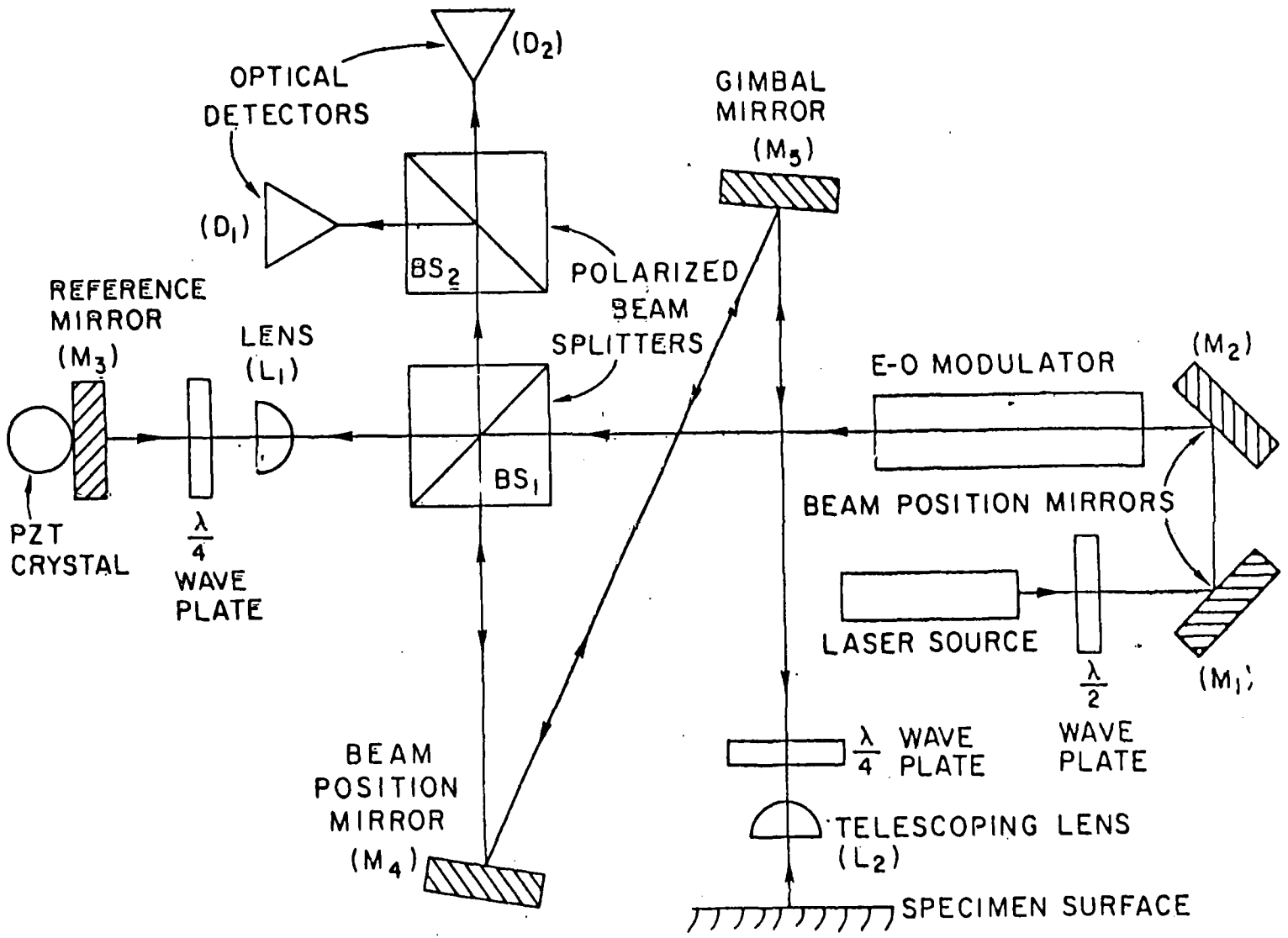

LASER BEAM ULTRASOUND AND ACOUSTIC EMISSION DETECTION

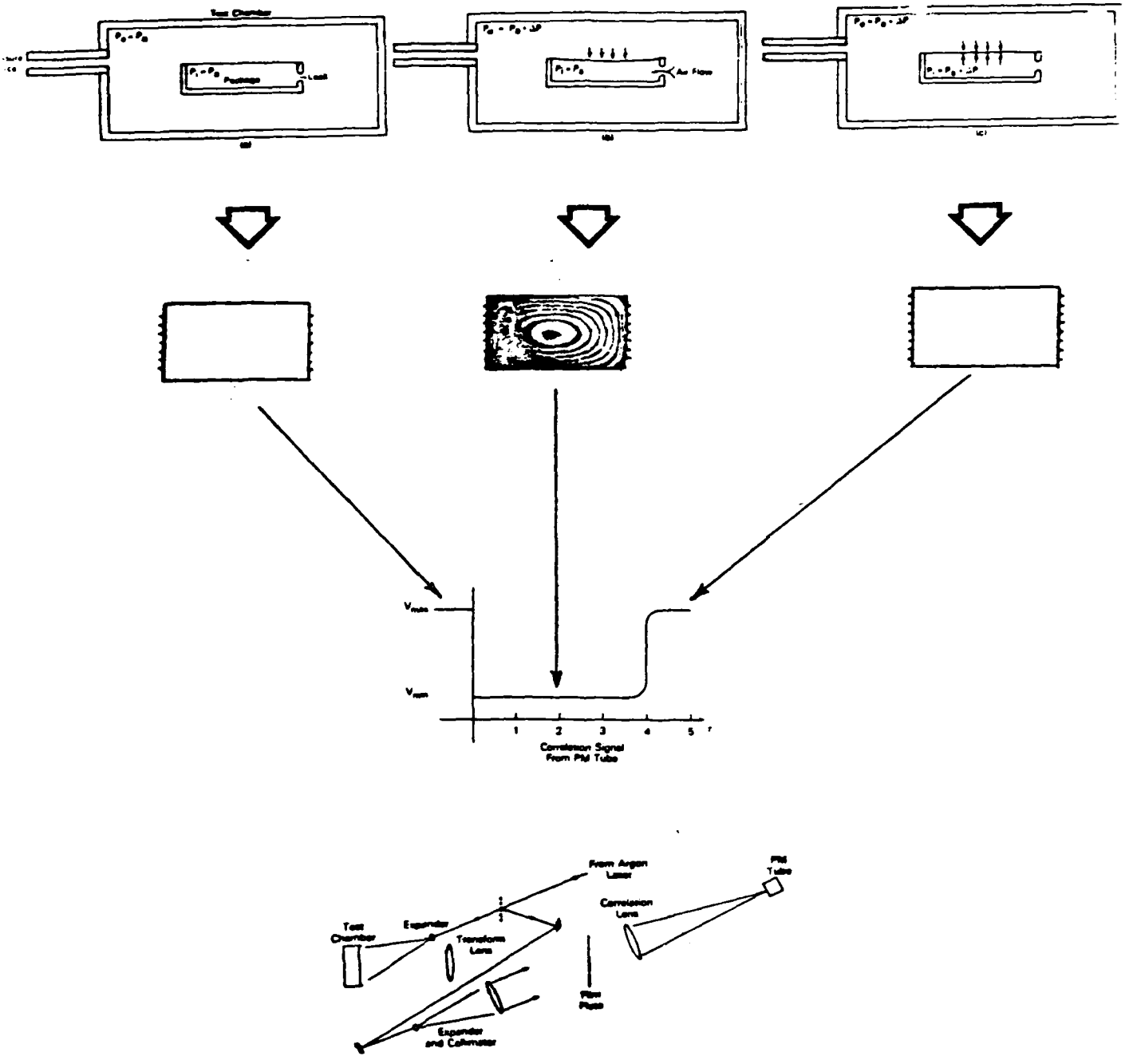

Optical setup used to measure leak rate.

OPTICAL HOLOGRAPHIC INTERFEROMETRY AND
CORRELATION LEAK MEASUREMENT

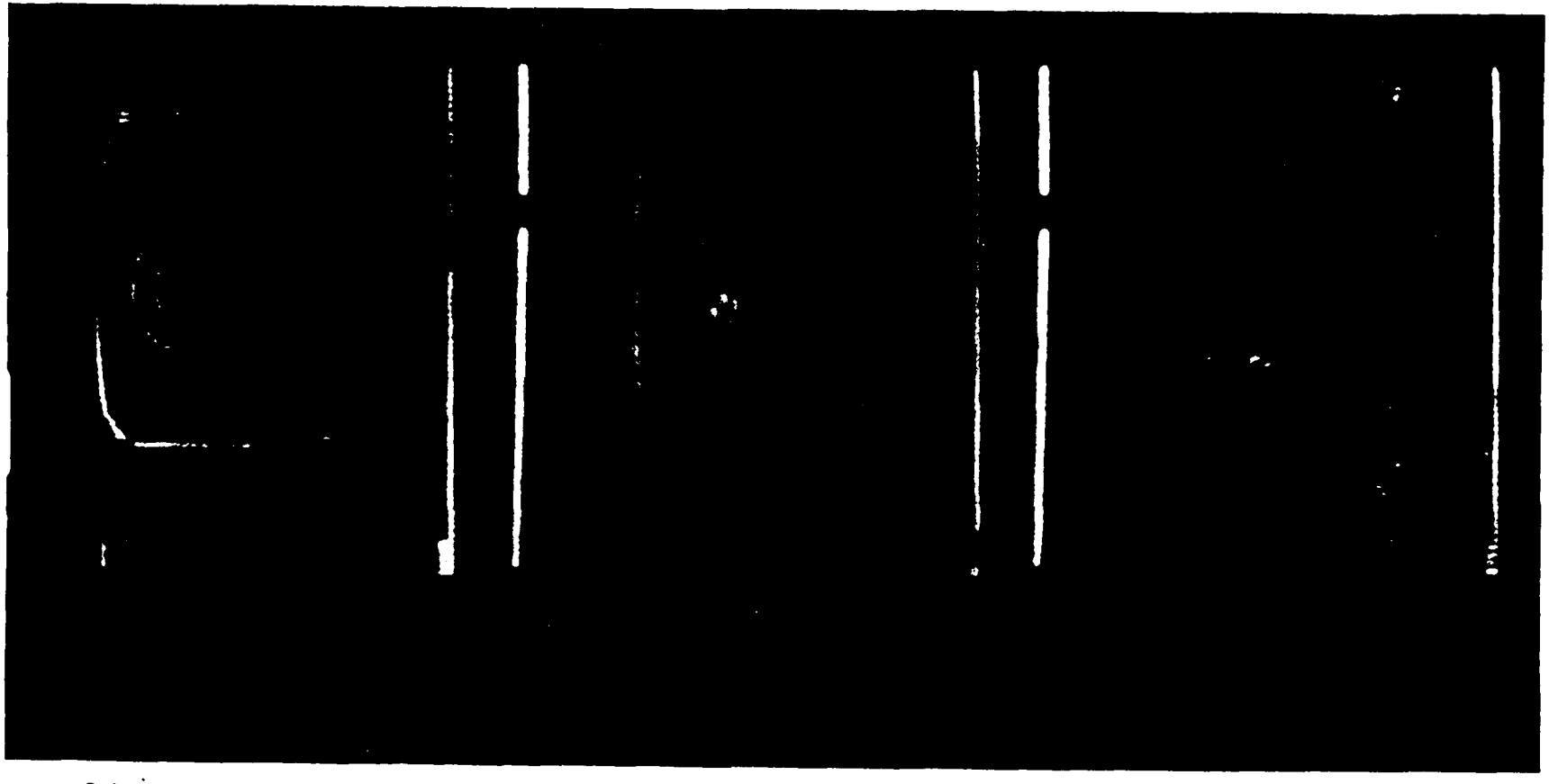

82,000 CYCLES 1,590 CYCLES 500 CYCLES

(CYCLED AT 130 % σ_{NS})

VIBRO-THERMOGRAPHIC DETECTION OF FATIGUE DAMAGE IN COMPOSITE STRUCTURE

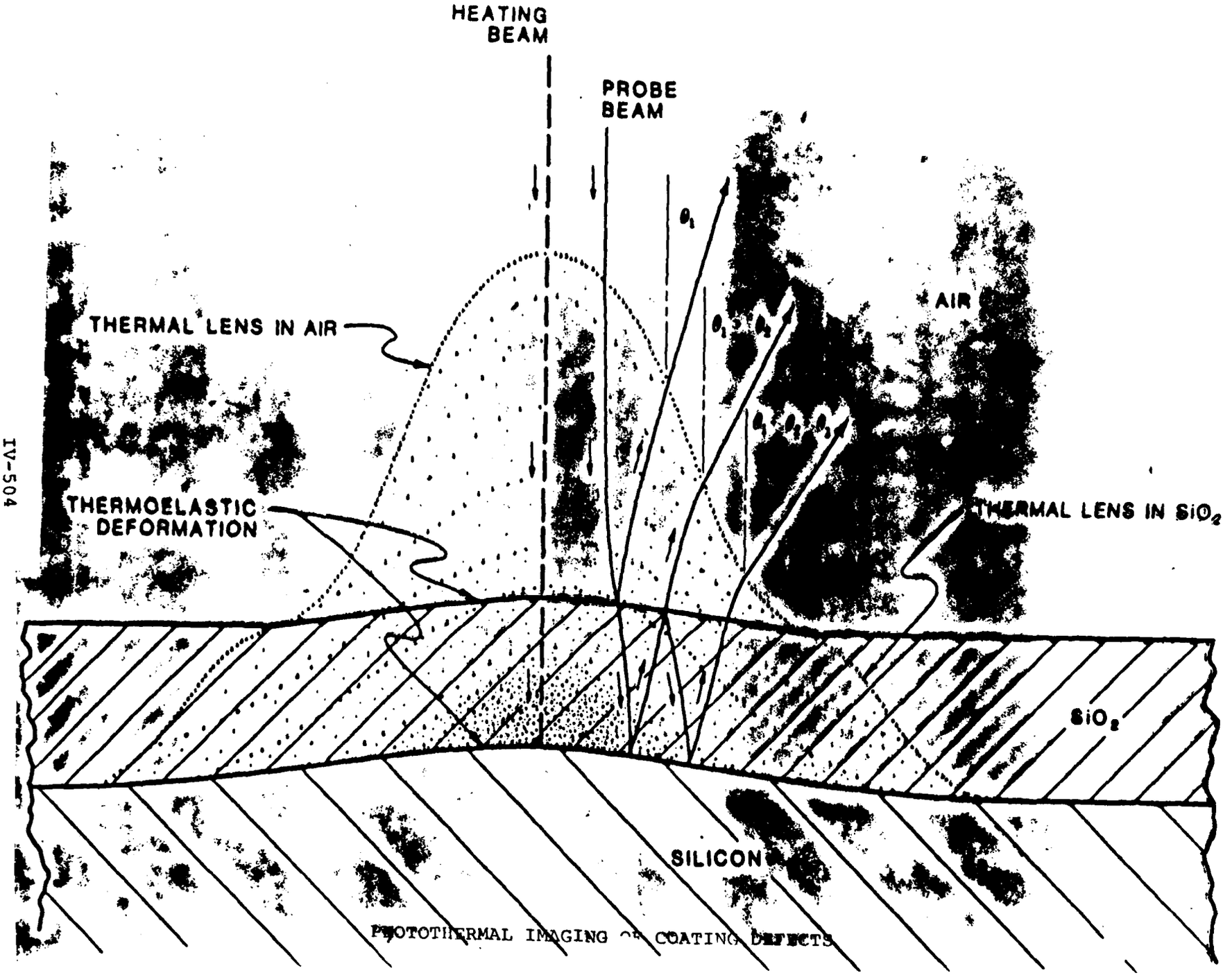
HEATING BEAM
PROBE BEAM
θ_1
AIR
θ_2
θ_3
THERMAL LENS IN AIR
THERMOELASTIC DEFORMATION
THERMAL LENS IN SiO_2
SiO_2
SILICON

HYPERFINE PARAMETERS

- ISOMER SHIFT
  (MÖSS)
  VARIES WITH TEMPERATURE AND PRESSURE
- QUADRUPOLE INTERACTION
  (MÖSS, NMR, PAC)
  SENSITIVE TO STRAIN AND ORIENTATION
- MAGNETIC HYPERFINE INTERACTION
  (MÖSS, NMR, PAC)
  VARIES WITH TEMPERATURE AND PRESSURE
- OTHER
  RELAXATION TIMES, ETC.

Figure 1. Hyperfine Parameters

HYPERFINE FIELDS: Techniques for Measurement

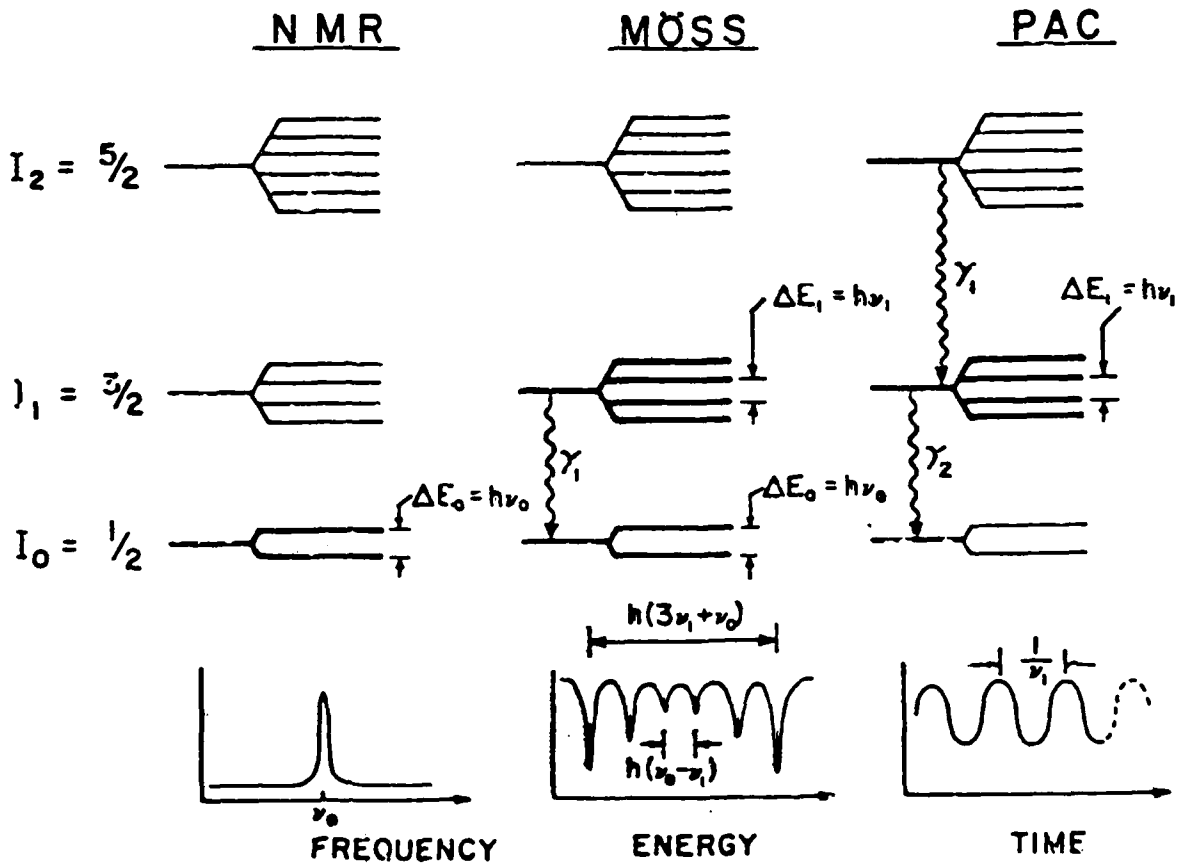

Economic Analysis - Format II 167-84

1. Project Title: Digital Image Amplification X-Ray System (DIAX)

2. Project Number: 167-84

3. Date: 1 April 1982

4. Project Objective: This program will develop an automated, real-time image amplification x-ray system. The necessity of such a system becomes obvious when one realizes that x-ray inspection is time consuming, labor intensive, highly subjective, and expensive. It is so expensive that 100% inspection of mortars is ruled out, so that one must rely on continuous sampling plans, which periodically disrupt production when defective items force reinspection of produced units. These plans do not assure removal of all defective items. The elimination of film radiography is also desirable since an important resource (silver) is conserved.

5. a. Description of Status Quo Alternative: At present the 4.2 Inch and 81MM mortars are x-ray radiographed. This entails bringing the mortars to a unit to expose film placed beyond the mortar. Then the x-rayed mortars are removed to be replaced by more and the film is taken away to be processed. After processing, the developed film is taken to the reading station where an interpretation of the images on the film is made. The defective mortars must then be segregated from good items. If the number of defects exceed a certain threshold, inspection becomes continuous for a certain period causing a production disruption.

b. Description of Alternative: A system that will give real-time analysis of mortars will replace the status quo. It will automatically image the explosive filler of the mortar and then provide real-time accept/reject decisions. The waiting period for segregating defective parts will be eliminated. Film will no longer be needed saving both the purchase price and storage costs. All the mortars will be inspected, obviating the need for the continuous sampling plan. A fluoroscopic type imaging system will be married to an image analysis system such as that developed in the AXIS program.

6. a. Economic Life of Status Quo Alternative: 10 years.

b. Economic Life of Proposed Alternative: 10 years.

ECONOMIC ANALYSIS (FORMAT II)

(ARRADCOM Suppl 1 to AR 11-28)

ROJECT TITLE: Digital Image Amplification X-Ray System (DIAX)

ROJECT NO: ARRADCOM 167-84

PROJECT/PROGRAM COSTS (MILLIONS $)

7 Project Year (FY)	8 Non-Recurring Costs (Alternative)	9 Recurring/Operating Costs (Status Quo)	10 Recurring/Operating Costs (Alternative)	11 Differential Annual Cost (Annual Cost Savings) Cols 9. Less 10.	12 Discount Factor	13 Non-Recurring Costs Discounted Cols 8. X 12.	14 Differential Annual Costs Discounted Cols 11. X 12.
FY84	.086				0.954	.082	
FY85	.624				0.867	.541	
FY86	.616				0.788	.485	
FY87	.600				0.717	.430	
FY88		.507	.069	.438	0.652		.286
FY89		.507	.069	.438	0.592		.259
FY90		.507	.069	.438	0.538		.236
FY91		.507	.069	.438	0.489		.214
FY92		.507	.069	.438	0.445		.195
FY93		.507	.069	.438	0.405		.177
FY94		.507	.069	.438	0.368		.161
FY95		.507	.069	.438	0.334		.146
FY96		.507	.069	.438	0.304		.133
FY97		.507	.069	.438	0.276		.121
					0.251		
TOTAL	1.926	5.07	.690	4.380		1.539	1.929

* ARRADCOM FORM 161A APR 78 EDITION OF DEC 77 IS OBSOLETE

15. Col 13. Total Cost $ 1.539

16. Adjustments to Col 13. Total
(a) Add: Discounted Value of Existing Assets to be used on the Proposed Project (+) 0.00

(b) Subtract: Discounted Value of Existing Assets Replaced by the Proposed Project (-) 0.00

(c) Subtract: Discounted Terminal Value of the New Investment (-) 0.18

17. Total Adjusted Discounted Non-Recurring Costs (Sum of 15 & 16 (a), less 16 (b) & 16 (c) 1.521

18. Col 14. Total Cost $1.929

19. Adjustment to Col 14. Total: Add: Discounted Value of Expansion, Modification or Overhaul Eliminated by the New Investment (+) 0.000

20. Total Adjusted Annual Differential Cost (Sum 18 & 19 (a)) 1.929

21. Savings/Investment Ratio (Item 20 ÷ Item 17) 1.268

22. Return on Investment (ROI) 14.536 %

23. Discussion of Benefits:

a. NA

b. NA

c. This program affords the possibility of real-time inspection of the mortar while eliminating one of the more unreliable parts of the inspection method. Film reading is a highly subjective art. This system makes an accept/reject decision. With this unit standardization of defect analysis is therefore possible.

d. NA

24. NA

25. Source/Derivation of Cost Estimates:

a. Major Assumptions and Constraints: Computations of costs were based on:

(1) Current prices for equipment in the trade literature

(2) Man-hour estimates submitted by contractors on previous similar programs

(3) Government labor rates based on information from comptroller groups assigned to PAD

(4) Contractor rates from ARRADCOM Circular 37-1 dated 28 Jul 82

(5) Additional technical work will be handled by a follow-on 2 year MM&T program commencing in FY85.

(6) All required additional units beyond FY86 funded through Facilities Projects or production support funding. These constitute the $600K shown in FY87 and are not attributable to this MTT project or its follow-on MM&T program.

(7) We have assumed that approximately 57% of the MTT program monies were spent in FY84 and the remainder used up in FY85.

(8) We have assumed that the follow-on MM&T is divided into a two year effort. The fiscal years covered by this project are FY85 and FY86. The budget request for these years (in FY83$) are: FY85 - $841K and FY86 - $335K. Further, since past experience indicates that receipt of funding usually occurs in January or February of the fiscal year and further that contracting efforts take an average of four to six months to complete, we have assumed that only $560K of the FY85 MM&T dollars will be spent in FY85. The remainder ($281K) and the FY86 monies are spent in FY86 giving a total expenditure of $616K.

(9) Items (7) and (8) combined result in the following expenditure pattern:

	FY84	FY85	FY86	FY87
MTT(FY83$)	$86	$64K		
MMT(FY83$)		$560K	$616K	
Facilities Program(FY83$)				$600K

(10) Terminal value is computed from an estimate of $70K for the final fair trade value of the equipment and software. The software has utility far in excess of the equipment since general purpose image processing algorithms can be used on multidinous machines and for many applications.

(11) Discussions with Milan AAP gave contract personnel rates of $7.43/m-hr., .351 for plant support, .481 for fringe benefits and a fee of 0.0386.

b. FY84

Materials & Equipment

Gov. $10K - Cost to fabricate standards.
Contractor - No materials are required.



Engineering Labor and Overhead

Gov:	Physicist	($36.76/m-hr.)	(870.51 m-hr.)	=	$32,000.00
Contractor:	Senior Scientist	($22.69/m-hr.)	(228.37 m-hr.)	=	$ 5,181.71
	Engineer	($16.27/m-hr.)	(307.31 m-hr.)	=	$ 5,000.00
			Y	=	$10,181.71

Total I = Y + 1.27Y = $23,112.48

Contractor Engineering Labor & Overhead = Total I = $23,112.48

Travel

Gov: $6,000 for project supervision

G&A

Material - 0
EL&O - $23,112.48 G&A = .18 Total I = $4,160.25 = L
Mfg - 0
Travel - 0 Total II = Total I + L = $27,272.73
TOTAL $23,112.48 = Total I

Profit: Profit = .1 Total II = $2,727.27 = P
Total III = Total II + P + $30,000

Totals:

Gov.	$48,000
Contractor	$30,000
	$78,000

Inflation Factor: 1.0510 (FY84)
Total Final I = $78,000 (1.0510) = $81,978

c. FY85

Materials & Equipment

Gov: No material or equipment to be pruchased
Contractor: No material or equipment to be purchased

Engineering Labor and Overhead

Gov:	Physicist	($36.76/m-hr.)	(489.66 m-hr.)	= $18,000
Contractor:	Senior Scientist	($22.69/m-hr.)	(352.58 m-hr.)	= $ 8,000
	Engineer	($16.27/m-hr.)	(551.29 m-hr.)	= $ 8,969.51
				Y = $16,969.51

Total I = Y + 1.27Y = $38,520.79
Contractor Engineering Labor & Overhead = Total I = $38,520.79

Travel

Gov. $4,000. for project Supervision

G&A

Material - 0
EL&O - $38,520.79
Mfg - 0
Travel - 0
TOTAL - $38,520.79

G&A = .18 Total I = $6,933.74 =L
Total II = Total I + L = $45,454.53

Profit: Profit = .1 Total II = $4,543.45 = P
Total III = Total II + P = $50,000.

Totals: Gov. - $22,000
Contractor - 50,000
$72,000

Inflation Factor: 1.1007 (FY85)
Total Final II = $72,000 (1.1007) = $79,250.4

IV-511

The total MTT Program then costs:

Final Total I + Final Total II = $161,228.40

d. The MM&T Program

We have assumed that the follow-on MM&T would be of two years in duration and commence in FY85. The budget requests, in FY83 dollars, for this program are: FY85 - $841,000; FY86 - $335,000. However, we expect the FY85 funding to be received in Jan 85. Because of that and the six month contract negotiation lead time we expect that only $560,000 of the FY83 request to be spent in FY85. The remainder ($281,000) will be spent in FY86 along with the $335,000 budgetted for that year. The inflation factors are: FY85 - 1.1007; FY86 - 1.1506. Therefore the inflated costs are:

FY85 - 560,000 (1.1007) + 281,000 (1.1506) = $939,710.6

FY86 - $335,000 (1.1506) = $385,451

The inflated budget requests are then:

FY85	FY86
$939.7	$385.4K

e. The Facilities Program

We have assumed that the replicate system needed will be paid for in the facilities program commencing in FY87. The cost of this program is (in FY83 dollars) $600,000. The inflation factor is 1.2017. Therefore the amount necessary is:

$600,000 (1.2017) = $721,020

f. Calculation of Cost Savings

Film and Processing Cost for Status Quo	$4.50
Production Rate for 4.2 Inch Mortar	319,000/yr
Production Rate for 81MM Mortar	650,000/yr
Number of 4.2 Inch mortars sampled	26,153/yr
Number of 4.2 Inch mortars screened	36,000/yr
Number of 4.2 Inch mortars x-rayed in morning & afternoon	21,469/yr
Total number of 4.2 Inch mortars x-rayed	83,622/yr
Number of 81MM mortars sampled	59,114/yr
Number of 81MM mortars screened	36,000/yr
Number of 81MM mortars x-rayed morning & afternoon	22,860/yr
Total number of 4.2 Inch mortars x-rayed	117,974/yr

Assume 3 4.2 Inch mortars are imaged on one x-ray film
Assume 5 81MM mortars are imaged on one x-ray film
Cost of x-ray film per year

$$\text{Cost 1} = \frac{\$4.50/\text{film}}{3(4.2\text{in/film})} \times 83{,}622\ (4.2\text{in/yr}) = \$125{,}433/\text{yr}$$

$$\text{Cost 2} = \frac{\$4.50/\text{film}}{5(81\text{MM/film})} \times 117{,}974\ (81\text{MM/yr}) = \$106{,}177.5/\text{yr}$$

Total cost of x-ray film = Cost 1 + Cost 2 = 231,610.5

Personnel Costs for Status Quo *

3 x-ray Inspectors - 3 ($7.43 X 1.832 X 1.17 X 1.0386 X 2080 m-hr) - $103.21K

3 Material Handlers (Cassette and Shell in x-ray area) film processing

- 3 ($7.43 X 1.832 X 1.17 X 1.0386 X 2080 m-hr) - $103.21K

2 Trucker/Handler (Central x-ray) - 2 ($7.43 X 1.832 X 1.17 X 1.0386 X 2080 m-hr - $68.81K

Total Status Quo Personnel - $275.23K

Total Status Quo Costs = X-Ray film Costs + Total Status Quo Costs

= $231.6K + $275.23K = $506.84K

Alternative Costs: *

2 X-ray Inspectors - 2 ($7.43 X 1.832 X 1.17 X 1.0386 X 2080 m-hr) = $68.81K

*Salaries computed with .832 overhead and fringe benefits, .17 factor for G&A and .0386 factor for fee.

Total Cost Savings = Total Status Quo Cost - Alternative Costs

= $506.84 - $68.81 = $438.03

d. Estimates based on engineering judgement; ARRADCOM Pamphlet 37-1, Kodak Film price catelogue, Trade publications.

26. Other Considerations:

a. Sensitivity Analysis: Reduced production rates for applicable mortars will reduce S/I and ROI. No quantitative estimate is available since deviation from FYDP is not anticipated.

b. Uncertainity factors: Technical risk for this project is minimal due to successes on related projects (AXIS) and recent advances by industry. The uncertainty in production rates can cause fluctuations in the S/I and ROI (see above).

27. Other Alternatives: NA

28. Focal Points: Dr. J.M. Argento, DRDAR-QAS-T, 880-6264
E.G. Barnes, DRDAR-QAS-T, 880-6264

DEVELOPING AND EMERGING NDE AREAS

X-RAY: HIGH RESOLUTION REAL-TIME IMAGING (SCREENS)
COMPUTERIZED AXIAL TOMOGRAPHY
DIFFRACTION TOPOGRAPHY (SYNCHROTRON RADIATION)
RAPID RESIDUAL STRESS (STRAIN) DETERMINATION (DEPTH)
AUTOMATED COMPTON SCATTERING INSPECTION SYSTEM

ACOUSTIC: RAPID RESIDUAL STRESS (STRAIN) DETERMINATION (DEPTH)
LASER BEAM ULTRASOUND GENERATION
LASER BEAM ULTRASOUND AND ACOUSTIC EMISSION DETECTION
NEW PIEZOELECTRIC ACOUSTIC EMISSION DETECTOR
ELECTROMAGNETIC ACOUSTIC TRANSDUCERS
ULTRASONIC COMPUTERIZED TOMOGRAPHY

OPTICAL: HIGH RESOLUTION OPTICAL HOLOGRAPHIC INTERFEROMETRY AND CORRELATION
(SURFACE STRAINS, LEAK TESTING, FULL FIELD VISUALIZATION OF ACOUSTIC WAVES)
FIBER OPTIC SENSORS

THERMAL: HIGH RESOLUTION INFRARED IMAGING
VIBRO-THERMOGRAPHY
PHOTOTHERMAL IMAGING

58/4-3

DEVELOPING AND EMERGING NDE AREAS (CONT'D)

ELECTRICAL AND MAGNETIC:

AC IMPEDANCE (CORROSION) (CORRODOSCOPE)

MAGNETOMETER (CORROSION)

BARKHAUSEN NOISE (ELECTRICAL)

BARKHAUSEN NOISE (MAGNETO ACOUSTICS)

CAPACITANCE HOLE PROBE

ELECTRONIC AND NUCLEAR:

NUCLEAR MAGNETIC RESONANCE IMAGING (ZEUGMATOGRAPHY)

ELECTRON SPIN RESONANCE

MØSSBAUER EFFECT

POSITRON ANNIHILATION

GENERAL:

DIGITAL DATA PROCESSING
(INTEGRATION, SUBTRACTION, ENHANCEMENT,
TRANSFORMATION, AND ANALYSIS)

AUTOMATION
(ROBOTICS)

58/4-4

TASK GROUP: DEVELOPING AND EMERGING NDE

RECOMMENDATIONS	TARGET PROGRAM	FOR USE IN	GATEKEEPER & ACTION REQUIRED	COST & TIME REQUIRED TO IMPLEMENT	READINESS IMPACT (ROI)
Develop Automated Real-Time X-Ray Inspection System for Mortar Warheads	4.2 in and 81 mm mortars	Production	DARCOM	Medium ($1.9M)	$438,000 savings/yr (14%)
Develop Image Processing Techniques for Use in Automated NDE Systems (Computer Techniques)	All NDE Applications	Production	DARCOM	Medium	Reduction in costs for development of automated NDE systems. Estimated $120,000/yr savings
Develop Automatic Compton Scattering Inspection System	Large Caliber Munitions	Production	DARCOM	Medium	Cost & hazard avoidance One reduced Gov. Liability ($1,000,000 settlement). Reduction in cost of inspection by $325,000/yr.
Develop Photothermal Imaging for Coating Inspection	All Coatings	Production	NAVY	Low	Cost savings hard to assess
Develop NMR Imaging Devices	Track Pad Rubber, Bare Charge such as Navy Breaker 5" - 54	Production	DARCOM NAVSEA	Medium	Reduction in cost due to removal of film. Reduction in spare parts requirements. Avoidance of failure

TASK GROUP: DEVELOPING AND EMERGING NDE (2)

RECOMMENDATIONS	TARGET PROGRAM	FOR USE IN	GATEKEEPER & ACTION REQUIRED	COST & TIME REQUIRED TO IMPLEMENT	READINESS IMPACT (ROI)
Develop noncontact ultrasound generation and acoustic emission techniques (laser generation)	Metal parts for large items Structural integrity of aircraft	Production	DARCOM AIR FORCE	Medium	Cost avoidance due to reduced malfunctions because of metal parts defects
Develop methods to measure residual stress (Mössbauer spectroscopy, positron annihilation)	Gun tubes, tank parts	Production	DARCOM PM	R&D Needed	
Fund testing technology research and development in areas such as: 1. Quantification of perfect classification in automated real-time radiography, ultrasonic and body current techniques; 2. Development of generic residual stress measurement techniques; 3. Nondestructive methods for testing charcoal filters; 4. Use of robots for NDE application; 5. Use of NDE information for process control on automated production lines; 6. Detailed description of bond strength to support NDE inspection methods	1. Inspection of HE in large caliber shell 2. Stress measurements in gun tubes 3. Nondestructive testing of gas masks 4. Inspection of weldments for tanks 5. Aircraft bonding	Production	ARMY AIR FORCE NAVY	Medium	Cost avoidance due to malfunction reduction Reduced costs for implementation of NDE techniques Reduction in personnel costs by automation and use of robots

59/6-1

7. SPECIAL PROBLEMS OF THE STUDY

5.1 As identified by this study, effective NDE application is a combination of technology, personnel, systems design and maintenance/logistic procedure. Successful implementation throughout the DoD anD its supporting industries requires close coordination at all levels. Currently, there appears to be no central point of responsibility for NDE policy within the DoD. We therefore recommend that an appropriate office within the OSD be designated as the central point of oversight of NDE matters for the DoD.

This office would insure proper coordination of all aspects of NDE matters within the OSD (technology, personnel, systems acquisition/maintenance etc.) and, through appropriate organizations/staff offices, translate this policy to the individual services. A primary function of this office would be the drafting of a DODI outlining policy for NDE contractural guidance from systems concept, through manufacture, to field deployment. This document should state purpose and scope of the DoD NDE program, assign responsibilities where appropriate, and state guidance/policy on training, equipment, and maintenance philosophies to insure sufficient, but nonredundant, NDE programs within each service.

5.2 Many of the elements being identified in this R/M - NDE study are already in place or partially in place within the Air Force and Naval Air Systems Command (NAVAIR) programs.

5.31/1

The Air Force program is the most advanced in terms of program definition and management as demonstrated by AF Reg 66-38, the existence of an AF NDI Program Office, and a strong R&D/MT NDE program at AFWAL. Despite this, several studies & internal reports have identified the lack of authority of the NDI Program Office, and the absence of 6.3 and 6.4 funding as major defeciencies in the AF program.

Within the NAVAIR program there is an OPNAVINST 4790.2, the Naval Aviation Maintenance Program, which includes requirements for controlling NDI at the Organizational, Intermediate and Depot levels of maintenance. There is also a NAVAIRINST 13070.1B draft, not yet approved, which details NDT/I responsibilities within NAVAIR. However, there is a very diffuse and complicated organization headed by an NDT/I Coordinator (position essentially vacant for approximately 9.5 years) and an NDI Applications Manager.

Within NAVSEA there are perhaps three separate areas concerned with NDE but they have not been identified. The submarine program included in this study appears to be very well managed, supported and funded and has apparently been quite successful.

Army philosphy has concentrated the application of NDT at the manufacturing level with some limited involvement at the Depot level. The Army Aviation Systems Command has been endeavoring to incorporate some of the AF/NAVAIR concepts (NDI manuals, NDI application in the field by military technicians) but their program is only now emerging.

5.31/2

It is believed that the Services need to explore methods for elevating NDI program management to an appropriate level which can ensure sufficient manpower, funding and authority to accomplish all aspects of NDI. It is strongly believed that many of the problems discussed in this and related studies on NDI would be adequately addressed by this approach.

5.3 Certain subjects of DoD-wide concern were identified by the committee. The following items are in this category and could be readily addressed by existing procedures:

5.3.1 MIL-I-6870 (Inspection Program Requirements, Nondestructive of Aircraft and Missile Materials and Parts) should be revised to cover systems other than aircraft and missiles, fully coordinated with all services, and vigorously applied.

5.3.2 Each service needs to address the current lack of adequate 6.3 (exploratory development) and 6.4 (engineering development) funds to transfer technology into practical field and manufacturing use systems.

5.3.3 The potential benefits of an NDI advisory board to a developing system are significant. This concept, based on the proposed Air Force system or designed for each services' particular requirements, should be considered for mandatory DoD-wide application.

5.4 Under present conditions, government agencies do not have coordinated NDI system requirements and depend on poorly written, ambiguous specifications. This has resulted in proliferation of industry documents which attempt to define and control NDI methods.

This condition has caused unnecessary cost to the government and confusion on the part of the manufacturer. Contractors who deal with more than one agency have particular difficulty in this regard, the result in such situations is the one or both of the agencies must compromise their requirements/needs and the contractor must compromise his system. Consequently, neither gets what he wants in the most cost effective manner. Also, data compilation and analysis is complicated since both the agencies and the contractor must make some modification to the routine/ existing methods.

The OSD must recognize the inefficiencies associated with this present system. Programs now underway by the JLC should be given high priority. Government/Industry working groups should be formed to reasonably establish the most cost effective procedures and general system requirements. These specification requirements should be developed to allow flexibility with detail methods.

58/13-1

VI. COMMON AREAS OF CONCERN WITHIN THE STUDY AND WITH OTHER WORKING GROUPS

Recent studies on the reliability of nondestructive inspections (Ref. "Have Cracks" Final Report) have shown that the single most significant factor influencing flaw detection reliability is the variation between individual inspectors and not variations in hardware performance, operating conditions, etc. A current University of Dayton/Air Force Academy study has indicated (Ref. see Maj Guy Phifer) that to date no single factor or group of factors can be identified that will predict the ability of an individual to be a good or bad nondestructive inspection technician. Good and bad as used herein is the technician's ability to find or not find flaws that should have been detected with NDE.

Non-automated NDE is extremely operator dependent, and includes such tasks as equipment set-up and standardization, performance of the inspection, and interpretation of the inspection results. The report prepared by the Task Group on Manpower, Personnel and Training indicates that five times more errors can be expected from human-induced causes than from hardware-related causes. Any improvements in NDE personnel selection, training and performance can significantly improve the reliability of NDE to find flaws (see Section IVC of this report). A comprehensive study to identify and quantify human factors applicable to good or bad NDE technicians would substantially improve NDE reliability and reduce maintenance costs. Training must be addressed for all present and future nondestructive inspection techniques. In order to take most of the subjectivity out of the inspections future emphasis

58/12-1

should include highly trained and certified individuals using computer-based mobile vans or similar vehicles. These "vans" would be advanced in electronics, miniaturization, algorithms/ software with programmed inspection procedures to produce repeatable, reliable inspection results giving quantitative flow characterization/sizing.

In future weapons systems, there will be a strong trend toward widespread use of Structural Composite Materials (e.g., the expected appearance of a new generation helicopter airframe comprised of composites, and greater use of composites to lighten tanks and other traditionally heavy vehicles). Such applications make urgent the search for NDE methods which reliably assess the remaining bond strength where no defects exist, determine the reproducibility of manufacturing methods used for fabricating composites, and predict the sites where failure under dynamic loading is apt to occur.

For high performance aircraft systems, engine deficiencies have been major drivers of maintenance costs and downtime. Reliable NDE techniques which detect wear debris, cracks, and oxidation in engine components are matters of high concern to both the NDE Group and the MSCM Group.

In the case of submarines and for sophisticated electronic systems, built-in NDE capabilities (or embedded NDE) are key factors for future designs. This is a matter of common concern with the Testing Technology Group.

58/12-2

VII. CONCLUSIONS AND RECOMMENDATIONS

The major highlights of this study can be grouped into three categories:

* Technical and Scientific Issues
* Personnel and Related Issues
* Management Issues

Within the first category, Technical and Scientific Issues, the trends are clear-cut:

* The major focus for NDE on ROI seems to be in the arena of manufacturing or initial production of parts. NDE methods can be effectively used to build in quality during this phase of weapon system evolution.

* Automated NDE during production has already provided major pay-off in several ways, including cost savings on parts which are normally produced in large numbers and then inspected. With in-process NDE, corrective action can be done "on-the-spot."

* Embedded sensors will be important elements in difficult to inspect and/or critical components ranging from structural units to electronic devices.

* New, more sophisticated NDE methods are required for more complex problems, finer levels of detection which have evolved from fracture mechanics analysis, and the expanded use of new materials such as advanced composites. A number of emerging NDE methods hold high promise.

* The wider use of modern data acquisition and trend analysis methods will ensure early detection and prevention or prompt resolution of user problems before they reach critical stages.

Under the second category, Personnel and Related Issues, the following areas were deemed to be of importance:

* For the next few years, automated NDE will impact mainly the production or manufacturing phases of weapons systems. Therefore, the emphasis on personnel qualifications (for field and depot NDE) will continue to be strong. In particular, the identification and quantification of human factors which relate to the development of skilled and motivated NDT/NDI personnel is of great importance.

* The development of awareness for the importance of NDE on the part of designers and engineers, especially in terms of designing and building in inspectability is a key point.

* The training of personnel to higher skill levels and to use and understand a variety of more sophisticated equipment, will be increasingly required for future DoD systems. In the face of these requirements, financial and professional rewards need to be tailored to avoid the loss of such highly trained personnel to other, more rewarding industrial positions.

As Management Issues, the most significant recommendations were:

* The establishment of a centralized point of oversight in OSD on NDE matters (for science and technology, training, personnel, systems acquisition, maintenance, and other issues).

* The establishment of NDE Advisory Boards (similar to existing Corrosion Control Boards), whose work would be preventive in nature, early in the stages of weapon systems development.

* Adopt common NDI/NDT manuals amongst the services wherever possible and practical, and assure that these are compatible with those employed in industry for use on weapons systems of joint concern. Well-developed NDI/NDT manuals can be effective maintenance and management tools.

* Focus on the development of tri-service NDE specifications and standards, whenever possible and practical, with the goal of reducing the numbers of proliferating standards and specifications. (A good start has been made in this direction in a smoothly-running JLC activity, but this should be expanded.)

* Technical orders which are keyed to special skills are useful management tools.

* The acceleration of new NDE methods and equipment into service can be facilitated by various means, amongst which are: adaptation (where possible) of commercialized NDE equipment and methods to DoD weapons systems use (rather than working from a newly developed but untested concept; planning for the logical progression of NDE methods and equipment early in the stages of weapon system development. (Special technology transfer funds should be set aside early in the design cycle for scale-up of NDE equipment.)

The return on investment (ROI) can be realistically quantified for a number of the recommendations which have been made in foregoing parts of this study. However, many of these, although judged to be high ROI investments in the opinion of the expert judges who have been involved in this study, will have to await verification until after implementation.

9.16

MANAGEMENT-RELATED ITEMS

RECOMMENDATIONS	TARGET PROGRAM	FOR USE IN	GATEKEEPER & ACTION REQUIRED	COST & TIME REQUIRED TO IMPLEMENT	READINESS IMPACT (ROI)
Scientifically establish personnel minimum aptitude, experience, and human factor standards for NDE trainees	All systems requiring NDE	Field Depot	OSD for DODI Each Service for implementation	$300K-1yr	↑ Increased manpower effectiveness ↑ Increased inspector proficiency ↓ Reduced training costs
Establish a mandatory periodic certification (with corresponding incentives) for all NDE personnel	All systems requiring NDE	Field Depot	Same	$1M-2yr	Same
Practical, hands-on approach to training complemented with state-of-the-art equipment	All systems requiring NDE	Field Depot	Same	Est: $300K annually 6 months to implement	Same
Establish and enforce an NDE Inspection Manual (-9,-26,-36) Program for DOD-wide application	All new systems requiring NDE	Field Depot Production	Same	0.5 to $2M/yr	↓ Decreased downtime and inspection costs ↑ Increased operational readiness ↑ Increased mission effectiveness
Establish and support NDE Advisory Boards for each major weapon system	All new major weapon systems	Development Production Depot Field	Same	Low cost 1-2yr to implement	Same

NDE PERSONNEL SELECTION, TRAINING, AND QUALIFICATION
NDE INSPECTION MANUAL

RECOMMENDATIONS	TARGET PROGRAM	FOR USE IN	GATEKEEPER & ACTION REQUIRED	COST & TIME REQUIRED TO IMPLEMENT	READINESS IMPACT (ROI)
Scientifically establish personnel minimum aptitude, experience, and human factor standards for NDE trainees	All systems requiring NDE	Field Depot	JTCG-NDI (Personnel Subgroup) JLC	Virtually no cost. 6-mos study, immediate implementation	Increased manpower effectiveness Increased inspector proficiency
Establish a mandatory periodic certification (with corresponding incentives) for all NDE personnel	All systems requiring NDE	Field Depot	JTCG-NDI (Personnel Subgroup) JLC	$1K/technician 6 mos to implement	Increased manpower effectiveness Mandatory, recurring training and personnel evaluation Personnel placement management tool
Practical, hands-on approach to training complemented with state-of-the-art equipment	All systems requiring NDE	Field Depot	JTCG-NDI (Personnel Subgroup) JLC	Est: $300K annually 3-6 months to implement	Increased inspector proficiency Decreased OJT
Establish and enforce an NDE Inspection Manual (-9,-26,-36) MIL-STD (DOD application)	All new systems requiring NDE	Field Depot Production	JTCG-NDI (Specs & Stds. Subgroup) JLC	Low Cost 1 year to initially implement	Consistent NDE on joint service systems Increased operational readiness
Establish and support NDI Advisory Boards for each major weapon system	All new major weapon systems	Development Production Depot Field	MAJCOM Directives AFR	Low cost 1-2yr to implement	Early NDE consideration in weapon system development

SPECIFICATIONS AND STANDARDS

RECOMMENDATIONS	TARGET PROGRAM	FOR USE IN	GATEKEEPER & ACTION REQUIRED	COST & TIME REQUIRED TO IMPLEMENT	READINESS IMPACT (ROI)
Establishment of Common Specifications and Standards in Generic Areas	General	Production Field Depot	DMSSO Increased Funding	$2M-5yr	Eliminate Redundant Standards and Specifications Reduction of Overall Number

NDE DATA BASE

RECOMMENDATIONS	TARGET PROGRAM	FOR USE IN	GATEKEEPER & ACTION REQUIRED	COST & TIME REQUIRED TO IMPLEMENT	READINESS IMPACT (ROI)
Expand and update field service data system. Apply data reduction techniques (trend analysis, etc.) to identify and correct problems	All Systems	Field Depot	Air Force SPO Navy PMA Army PM	$3M-2 yrs	↑ Operational Readiness 10% ↓ Cost of Repair and Replacement High ↓ Spare Parts High

TASK GROUP: TANKS

RECOMMENDATIONS	TARGET PROGRAM	FOR USE IN	GATEKEEPER & ACTION REQ'D	COST & TIME REQUIRED TO IMPLEMENT	READINESS IMPACT(ROI)
1. Develop System For Monitoring Rubber Material Properties	M1/M60	Production	DARCOM PMs-M1/M60	$2-5M	Cost of Replacement ↓ Greater Readiness ↑ Spare Parts ↓
2. Develop Method to Determine Rubber to Metal Bond Strength	M1/M60	Production Rebuild	"	$2-5M	"
3. Refine & Implement X-Ray Diffraction Techniques to Measure Residual Stresses in Torsion Bars and Track Pins	M1/M60	"	"	$1M	Fatigue Life ↑ 10% Spare Parts ↓ 10% Operational Readiness ↑
4. Implement NDE at Depot Rebuild for Critical Components	M60 (Current) M1 (Future)	Rebuild	"	$5M	Repair & Replacement Cost ↓ Operational Readiness ↑
5. Develop & Implement Weld Inspection Capability of Acoustic Emission, Computer-Aided Ultrasonic, & Weld Quality Monitoring Systems	M1 and other Tank Mods	Production & Rebuild	"	AE - $2M UT - $1-2M WQM - $2M	Mission Effectiveness ↑ Manufacturing Cost ↓

TASK GROUP: FIXED-WING AIRCRAFT

RECOMMENDATIONS	TARGET PROGRAM	FOR USE IN	GATEKEEPER & ACTION REQUIRED	COST & TIME REQUIRED TO IMPLEMENT	READINESS IMPACT (ROI)
Corrosion Detection	Multi-system	F,D	AFWAL/ NAVAIR	$15M-5yr	↓ Downtime ↑ Operational Readiness ↓ Insp. Time and Costs $2B/yr
NDE of Electronics	Multi-system	P,D,F	AFWAL/ NAVELEX/ AMMRC	$1M-2yr	↓ Repair & Replacement ↑ Mission Effectiveness ↓ Spare Parts 30%
NDE of Composite Materials	AV8B, F-18, F-15, F-16, Multi-system	P,D,F	AFWAL/ NAVAIR	$10M-4yr	↓ Downtime & Costs ↓ Repair & Replacement ↓ Manpower ↑ Insp.Proficiency High
Improved Conventional NDI Equipment	Multi-system	P,D,F	AFWAL/ NAVAIR/ AMMRC	$5M-5yr	↓ Downtime & Insp. Costs ↑ Inspector Proficiency High
Filmless Radiography	Multi-system	P,D,F	AFWAL/ NAVAIR/ NSWC/ AMMRC	$6M-4yr	↓ Downtime & Insp. Costs ↓ Cost by 50% Radiography
Automated Inspection Systems	Multi-system	P,D,F	AFWAL/ NAVAIR/ AMMRC	$25M-5yr	↓ Downtime & Insp. Costs ↑ Inspector Proficiency Very High

TASK GROUP: ROTARY-WING AIRCRAFT

RECOMMENDATIONS	TARGET PROGRAM	FOR USE IN	GATEKEEPER & ACTION REQUIRED	COST & TIME REQUIRED TO IMPLEMENT	READINESS IMPACT (ROI)
Incorporate automated ultrasonic inspection of composite structures and components	UH-60 AH-64 JVX LHX	Production, Depot	DARCOM Blackhawk PM AAH PM	$1M-2M	100% inspection of critical areas Cost of repair ↓ (10%) Cost avoidance: ↓ Spares (15%) ↓ Manpower (5%) ↑ Operational readiness (10%)
Automated NDT software	All programs	Production, Depot		$1M	↓ Cost reduction (20%)
Develop N-Ray tube system for real time composite structure inspection	AH-64 JVX LHX		DARCOM AAH PM	$1-5M	Cost avoidance: ↓ Spares (15%) ↓ Manpower (5%) Cost of repair ↓ (10%)
Embedded acoustic sensors	All helicopter rotor blades	Field	DARCOM (AVSCOM) Blackhawk PM Seahawk PM Nighthawk PM	$1-5M	↑ Operational readiness Cost avoidance: ↓ Spares (10%) ↓ Manpower (20%)
Computerized trend analysis of maintenance NDI applications	UH-60 AH-64 JVX LHX	Design, Program Management	DARCOM AAH PM	$1-5M	Cost avoidance (30%) ↑ Operational readiness ↓ Spare parts (30%)

TASK GROUP: SHIPS

RECOMMENDATIONS	TARGET PROGRAM	FOR USE IN	GATEKEEPER	COST AND TIME REQ'D TO IMPLEMENT	READINESS IMPACT (ROI)
Include in design of new ships those features which make it easier to monitor system performance over the life cycle, particularly in those areas which are, in current designs, inaccessible in the field for examination (e.g., embedded NDE sensors).	All new designs	Field, Depot	NAVSEA	High	Reduce time in depot level (shipyard overhaul) and cost of repairs required throughout ship life cycle.
Create new contracting initiatives which make it easier for industry to participate in applying or testing their available equipments to solve problems identified in Weapons Systems Platforms.	Various	Field, Depot	Various. Recommend OSD take for action.	High, overall; Low on an individual program basis.	Will shorten time from identification of need to introduction of NDE equipment and methods to meet this need, in order to improve or at least "hold the line" on reliability degradation.
Create incentives which make it possible for services to implement the mid 70's OSD Mandate for "Reliability Centered Maintenance" in a meanful way.	All "High Cost" Weapons Projects.	Field, Depot	OSD	High	Gains such as those achieved through Ship Systems Performance Monitoring (which is a Reliability Centered Maintenance type of program) may be achieved.
For each major weapons system or type of vehicle, establish a dedicated performance monitoring program.	All "Major-High Cost	Field	All Services	High	Same as above.

6.100

TASK GROUP: DEVELOPING AND EMERGING NDE

RECOMMENDATIONS	TARGET PROGRAM	FOR USE IN	GATEKEEPER & ACTION REQUIRED	COST & TIME REQUIRED TO IMPLEMENT	READINESS IMPACT (ROI)
Develop Automated Real-Time X-Ray Inspection System for Mortar Warheads	4.2 in and 81 mm mortars	Production	DARCOM	Medium ($1.9M)	$438,000 savings/yr (14%)
Develop Image Processing Techniques for Use in Automated NDE Systems (Computer Techniques)	All NDE Applications	Production	DARCOM	Medium	Reduction in costs for development of automated NDE systems. Estimated $120,000/yr savings
Develop Automatic Compton Scattering Inspection System	Large Caliber Munitions	Production	DARCOM	Medium	Cost & hazard avoidance One reduced Gov. Liability ($1,000,000 settlement). Reduction in cost of inspection by $325,000/yr.
Develop Photothermal Imaging for Coating Inspection	All Coatings	Production	NAVY	Low	Cost savings hard to assess
Develop NMR Imaging Devices	Track Pad Rubber, Bare Charge such as Navy Breaker 5" - 54	Production	DARCOM NAVSEA	Medium	Reduction in cost due to removal of film. Reduction in spare parts requirements. Avoidance of failure

TASK GROUP: DEVELOPING AND EMERGING NDE (2)

RECOMMENDATIONS	TARGET PROGRAM	FOR USE IN	GATEKEEPER & ACTION REQUIRED	COST & TIME REQUIRED TO IMPLEMENT	READINESS IMPACT (ROI)
Develop noncontact ultrasound generation and acoustic emission techniques (laser generation)	Metal parts for large items Structural integrity of aircraft	Production	DARCOM AIR FORCE	Medium	Cost avoidance due to reduced malfunctions because of metal parts defects
Develop methods to measure residual stress (Mössbauer spectroscopy, positron annihilation)	Gun tubes, tank parts	Production	DARCOM PM	R&D Needed	
Fund testing technology research and development in areas such as: 1. Quantification of perfect classification in automated real-time radiography, ultrasonic and body current techniques; 2. Development of generic residual stress measurement techniques; 3. Nondestructive methods for testing charcoal filters; 4. Use of robots for NDE application; 5. Use of NDE information for process control on automated production lines; 6. Detailed description of bond strength to support NDE inspection methods	1. Inspection of HE in large caliber shell 2. Stress measurements in gun tubes 3. Nondestructive testing of gas masks 4. Inspection of weldments for tanks 5. Aircraft bonding	Production	ARMY AIR FORCE NAVY	Medium	Cost avoidance due to malfunction reduction Reduced costs for implementation of NDE techniques Reduction in personnel costs by automation and use of robots

END

FILMED

4-84

DTIC