AD-A145 030 GEMSS (GROUND EMPLACED MINE SCATTERING SYSTEM) EXTENDED 1/1
RANGE TRIPLINE SE..(U) HONEYWELL INC MINNEAPOLIS MN
DEFENSE SYSTEMS DIV M B WEIDENBACH ET AL. JUL 84 47127
UNCLASSIFIED ARLCD-CR-84020 DAAK10-83-C-0049 F/G 19/1 NL

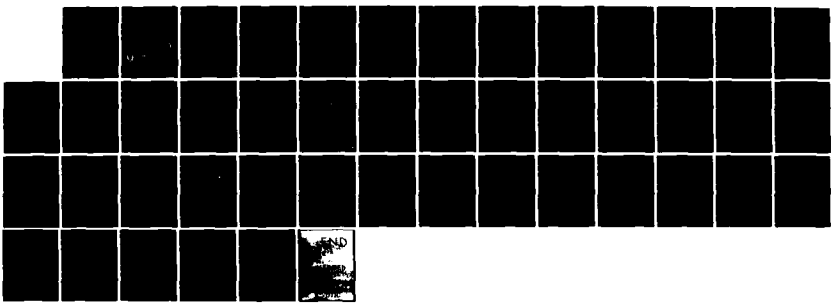

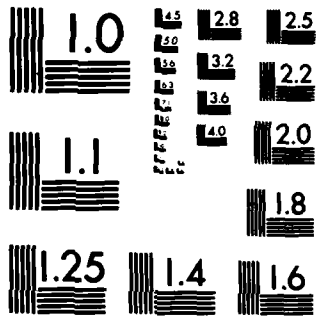

MICROCOPY RESOLUTION TEST CHART
NATIONAL BUREAU OF STANDARDS-1963-A

(12)

AD-E401 205

AD-A145 030

CONTRACTOR REPORT ARLCD-CR-84020

GEMSS EXTENDED RANGE TRIPLINE SENSOR (ERTS) PRODUCT IMPROVEMENT PROGRAM (PIP)

M.B. WEIDENBACH
B.J. AMUNDSON
R.A. JOHNSON

HONEYWELL INC.
DEFENSE SYSTEMS DIVISION
5640 SMETANA DRIVE
MINNETONKA, MN 55343

DTIC
ELECTE
AUG 2 2 1984
B

JULY 1984

U.S. ARMY ARMAMENT RESEARCH AND DEVELOPMENT CENTER

LARGE CALIBER WEAPON SYSTEMS LABORATORY

DOVER, NEW JERSEY

Approved for public release; distribution unlimited.

DTIC FILE COPY

84 08 20 158

The views, opinions, and/or findings contained in this report are those of the author(s) and should not be construed as an official Department of the Army position, policy, or decision, unless so designated by other documentation.

The citation in this report of the names of commercial firms or commercially available products or services does not constitute official endorsement by or approval of the U.S. Government.

Destroy this report when no longer needed. Do not return to the originator.

UNCLASSIFIED

SECURITY CLASSIFICATION OF THIS PAGE (WHEN DATA ENTERED)

REPORT DOCUMENTATION PAGE		READ INSTRUCTIONS BEFORE COMPLETING FORM
1. REPORT NUMBER Contractor Report ARLCD-CR-84020	2. GOV'T ACCESSION NUMBER ADA145030	3. RECIPIENT'S CATALOG NUMBER
4. TITLE (AND SUBTITLE) GEMSS EXTENDED RANGE TRIPLINE SENSOR (ERTS) PRODUCT IMPROVEMENT PROGRAM (PIP)		5. TYPE OF REPORT/PERIOD COVERED Final 2 March 1983 -- 30 December 1983 6. PERFORMING ORG. REPORT NUMBER 47127
7. AUTHOR(S) M. B. Weidenbach B. J. Amundson R. A. Johnson		8. CONTRACT OR GRANT NUMBER(S) DAAK10-83-C-0049
9. PERFORMING ORGANIZATIONS NAME/ADDRESS Honeywell Inc. -- Defense Systems Division 5640 Smetana Drive Minnetonka, MN 55343		10. PROGRAM ELEMENT, PROJECT, TASK AREA & WORK UNIT NUMBERS PIP No. 1-82-09-7721
11. CONTROLLING OFFICE NAME/ADDRESS ARDC, TSD STINFO Div [DRSMC-TSS(D)] Dover, NJ 07801		12. REPORT DATE July 1984 13. NUMBER OF PAGES 44
14. MONITORING AGENCY NAME/ADDRESS (IF DIFFERENT FROM CONT. OFF.) ARDC, LCWSL Munitions Systems Div [DRSMC-LCU-CM(D)]		15. SECURITY CLASSIFICATION (OF THIS REPORT) Unclassified 15a. DECLASSIFICATION DOWNGRADING SCHEDULE

16. DISTRIBUTION STATEMENT (OF THIS REPORT)

Approved for public release; distribution unlimited.

17. DISTRIBUTION STATEMENT (OF THE ABSTRACT ENTERED IN BLOCK 20, IF DIFFERENT FROM REPORT)

18. SUPPLEMENTARY NOTES

19. KEY WORDS (CONTINUE ON REVERSE SIDE IF NECESSARY AND IDENTIFY BY BLOCK NUMBER)

Extended range tripline sensor
Ground emplaced mine scattering system
First article acceptance test
Lot acceptance test
Product improvement program

20. ABSTRACT (CONTINUE ON REVERSE SIDE IF NECESSARY AND IDENTIFY BY BLOCK NUMBER)

Three changes were incorporated into the GEMSS extended range tripline sensor (ERTS): (1) a stronger tripline, (2) a smaller breakwire, and (3) B. F. Goodrich Estane 58880 as the diaphragm material. A final successful first article acceptance test was run, as well as a successful lot acceptance test for the single delivery lot of 4,500 ERTS units.

HD-168 REV 11/74

DD FORM 1 JAN 73 1473 EDITION OF 1 NOV 55 IS OBSOLETE

UNCLASSIFIED

SECURITY CLASSIFICATION OF THIS PAGE (WHEN DATA ENTERED)

Contents

		Page
Introduction		1
Technical Report		3
Changes Incorporated		3
Data Review		3
Bobbin Analysis		8
Quality Report		10
First Article Acceptance Tests		10
Lot Acceptance Tests		11
Special Tests		12
Leakage Test		12
Langlie Test		12
Appendixes		
A	First Article Test Summary Report and Lot Acceptance Test Results	13
B	Engineering Test Report OEXM 32211	31
Distribution List		44

Accession For
NTIS GRA&I
DTIC TAB
Unannounced
Justification
Distribution/
Availability Codes
Avail and/or
Dist Special
A-1

DTIC COPY INSPECTED 2

INTRODUCTION

The extended range tripline sensor is used in the antipersonnel mines of the GEMSS, GATOR and MOPMS systems. The tripline is deployed when the bobbin on which it is wound is spring ejected from the sensor body. The bobbin is mechanically locked to the sensor body by a release mechanism which is designed to be activated by gas pressure above a threshold level. Activation of the release mechanism unlocks the bobbin. A pressure cartridge is used to supply the required threshold level of gas pressure. The deployed tripline is the mine's detection element; however, the sensitivity of this detection is dependent on how well the force of target/tripline interaction is transmitted through the tripline to a 0.0040-inch breakwire and the force needed to break this wire. The mine's electronic assembly monitors the continuity of this wire and initiates the self-destruct mode when wire continuity is lost.

In the subzero climate environments of the GEMSS DTII and OTII tests, the deployment of tripline from sensor was adequate but not 100 percent. Analysis of the hardware and data identified the reasons for this non-deployment as: the rigidity of the sensor's diaphragm and/or the lower output of the pressure cartridge at cold temperatures. The current material used for the diaphragm is Roylar E-82 and its flexibility is highly temperature dependent at cold temperatures; for example, its flexibility at the system's required low temperature operating limit of −35°F is approximately 52 percent of its flexibility at 0°F. Also, pressure cartridge closed bomb tests indicate that the average peak pressure at −35°F is approximately 65 percent of the average peak pressure at the system's high temperature operating limit of 125°F. The need for replacement is urgent because Roylar E-82 is no longer manufactured. It will be replaced by Estane 58880.

The detection sensitivity of the tripline/breakwire interface meets the requirements of the sensor specification; however, tactical field test data indicated that the strength of the tripline should be increased and that of the breakwire decreased. In the ideal detection situation, the minimum (1.8 lb) break strength of the tripline and the maximum (0.9 lb) break strength of the breakwire guarantee a detection if the tension force in the tripline exceeds 0.9 lb. In the tactical situation, it is often the case that between the source of the tension in the tripline and the breakwire, the tripline is in contact with other objects (vegetation, etc.). This means that the tension in the tripline at the source may exceed the minimum 1.8 lb needed to break the tripline before the tension force at the breakwire is sufficient to break the breakwire. An ideal tripline would be one that could not be broken. Another tactical situation that sometimes occurs is that the target detects the tension in

the tripline before it induces a tension of 0.9 lb, the maximum breakwire strength. Detection sensitivity for this last case would be improved if the breakwire had a maximum break strength less than the current 0.9 lb.

One of the principal objectives of this product improvement program was to incorporate the following changes into the extended range tripline (ERTS) technical data package and to demonstrate/characterize each for adequacy:

a. Alternate diaphragm material which is more flexible at cold temperature. (Original material in TDP is also no longer available.)

b. Weaker breakwire for increased sensitivity.

c. Stronger tripline thread to increase probability of breakwire opening before tripline breaks when pulled.

A second objective was to manufacture and deliver 4,500 ERTS with above modifications to Aerojet Corp., who had a parallel PIP contract to include improved sensors plus other modifications in the M74 mine.

The third objective was to provide a quantity of lithium cells to both Aerojet Corp. and Burroughs Corp. as government furnished material (GFM) to be used on PIP contracts for the M74 and M75 mines, respectively. The lithium cell is the power source for the GEMSS M74 and M75 mines and will be required in many of the mines manufactured under the GEMSS PIP program. The technical data package (TDP) for the lithium cell is a proven TDP; therefore, with respect to the lithium cell, Contract DAAK10-83-C-0049 was simply the vehicle to procure lithium cells and deliver them as GFM to the appropriate PIP contractors.

TECHNICAL REPORT

The principal objectives of this contract were to incorporate three changes into the Extended Range Tripline Sensor (ERTS), to test the effectiveness of these changes, and to ship 4500 ERTS to a specified contractor. An additional objective was to ship 2250 standard lithium batteries to the same contractor.

Changes Incorporated

The three changes incorporated into the ERTS in this contract were:

1. A stronger tripline (2.5 lb minimum break strength versus the original 1.8 lb minimum break strength).

2. A smaller breakwire (0.0035-inch diameter versus the original 0.0040 inch diameter).

3. A different diaphragm material (B.F. Goodrich Estane 58880 versus the original Uniroyal E-82).

Data Review

The initial effort on this contract consisted of a review of the technical data (drawings and specification) to determine changes necessary to make them compatible with the three changes specified above. Results of this review were submitted in a letter from J.H. Lundquist, dated 13 April 1983, Subject: Contract DAAK10-83-C-0049, GEMSS ERTS PIP, CRDL Requirements.

Drawing Changes

The drawing changes necessary to reflect the three changes and to correct minor errors are presented in Table 1.

All NEXT ASSEMBLY and USED ON boxes should be changed as necessary to assure that the drawings are identified with the proper mine.

Table 1. Drawing change summary

Drawing	Change required	Comments
9298576 (Wire, Magnet, Electrical)	In Note 1B, "#38 AWG" should be "#39 AWG". In Note 1C, "0.004 ± 0.0001 ROUND" should be "0.0035 ± 0.0001 ROUND".	This is an ADAM drawing. If this change is made the drawing cannot be used for ADAM. The drawing can either be changed to a tabulated drawing or a new drawing can be made.
9292972 (Tripline Sensor Extended Range)	In Note 3, "LOCATED 32 FEET" should be "LOCATED 29 FEET" and "0.3 TO 0.9 LB" should be "0.22 TO 0.82 LB".	See paragraphs entitled "Deployment Barrier Distance" and "New Minimum and Maximum Limits on Breakwire Strength" on pages 8 and 9, respectively.
9292991 (Release Mechanism Assembly)	In Zone C5 change "RING, LOCK - 9298586" to "RING, BALL LOCK - 9298586".	
9292998 (Diaphragm Assembly)	In Zone CD-3 change "DIAPHRAGM - 9298598-2" to "DIAPHRAGM - 9298598-1".	
9298592 (Thread, Polyester)	In Note 1A, "234 ± 8 DECITEX" should be "320 ± 8 DECITEX". In Note 1B, "1.8 LB MIN" should be "2.5 LB MIN".	This is an ADAM drawing. If this change is made it cannot be used for ADAM. The drawing can either be changed to a tabulated drawing or a new drawing can be made.
9298598 (Diaphragm)	In the table at the bottom of the drawing add "9292998" in the NEXT ASSEMBLY box for 9298598-1.	
9292982 (Bobbin Assembly)	In Note 2, "46 ± 3 FEET" should be "34 ± 2 FEET". In Note 7, "750 REVOLUTIONS" should be "580 REVOLUTIONS". Delete Note 8. Change left view as shown in Figure 1. Add Note 10: "ADD A DROP OF ADHESIVE AT EXIT POINT OF THREAD JUST PRIOR TO ASSEMBLY OF THE BOBBIN WEIGHT INTO THE BOBBIN".	Permission to incorporate this change was granted by ARRADCOM approval of Deviation 0297-008 (Ref PAN A3N7705).
XXXXXXX (Adhesive)	Make a new drawing like Figure 2 for the adhesive.	

FROM:

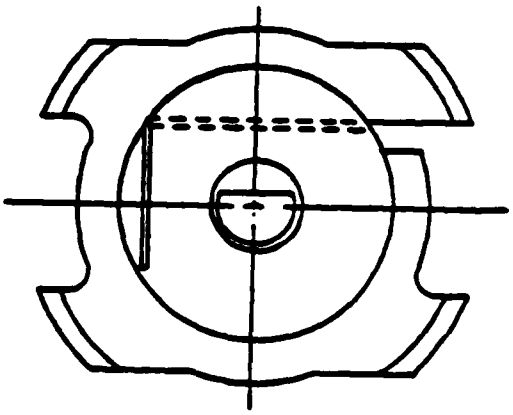

TO:

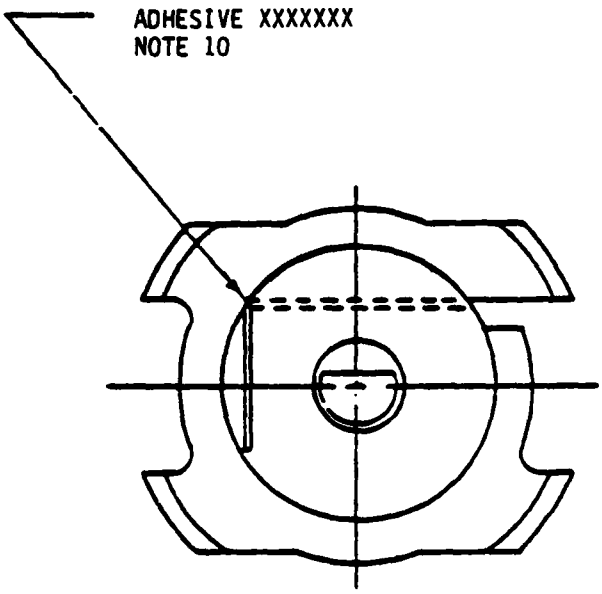

Figure 1. Changes to end view on drawing 9292982

DWG NO 28201657

PART NO
28201657-101

APPROVED SOURCE OF SUPPLY

CONTROL NUMBER	SUPPLIER DATA		
	FSCM NO	PART NO	NAME AND ADDRESS
28201657-101	61078	PERMABOND 910	PERMABOND INTERNATIONAL CORP 480 SOUTH DEAN STREFT ENGLEWOOD NEW JERSEY 07631

REVISIONS			
REV	DESCRIPTION	DATE	APPROVED

NOTES:

1. MATERIAL: PERMABOND 910 ADHESIVE.
2. MUST MEET REQUIREMENTS OF MIL-A-46050, TYPE I CLASS 2.
3. IDENTIFICATION OF THE SOURCE OF SUPPLY HEREON IS NOT TO BE CONSTRUED AS A GUARANTEE OF CONTINUED AVAILABILITY.

SOURCE CONTROL DRAWING

QTY REQD	PART OR IDENTIFYING NO	NOMENCLATURE OR DESCRIPTION	REMARKS	ITEM NO
	THIRD ANGLE PROJECTION			

REFERENCE	NEXT ASSY	USED ON
		ERTS

MATERIAL: PURCHASED

FINISH: SEE NOTE

DRAWN BY 92-11-18
CHECKED BY
REVIEWED
CONTROL MGR
SQA
PROJ ENGR 89-9-18

CONTRACT NO

AGENCY APPROVAL

Honeywell — DEFENSE SYSTEMS DIVISION, 600 2ND STREET N.E., HOPKINS, MINNESOTA 55343

ADHESIVE

SIZE B | FSCM NO 08638 | DWG NO 28201657

SCALE | SHEET

CONTROL C

Figure 2. Adhesive drawing

During this contract it was apparent that vendors were having difficulty manufacturing the booster spring (9292990). The drawing had ambiguities in it as evidenced by various interpretations of what it meant. In addition, it was obvious that the spring load test fixture was not conducive to providing repeatable load readings. In order to clear up the ambiguities and improve the load test fixture, ECP 83-0007-045 was submitted. It was submitted on ERTS GATOR Contract DAAK10-83-C-0007 running concurrently with the ERTS GEMSS PIP contract which this report covers; however, the changes requested in it apply to the GEMSS PIP sensor because the same booster spring is used in both sensors. The ECP requested the following changes to drawing 9292990:

a. In Zone C4 change "0.395 + 0.010 SEE NOTE 8" to "0.395 + 0.010 SEE NOTES 8 & 9."
b. In Zone C4 add "SEE NOTE B" with an arrow pointing to the left end of the spring.
c. In Zone C3 change "SEE NOTE 5" to "SEE NOTE B."
d. In Zone C2 change "0.385 + 0.010" to "0.385 MIN."
e. In Zone D2 change "0.455 MAX DIA, 8 COILS REF SEE NOTE 9" to "0.455 MAX DIA, 9 COILS REF SEE NOTE 9."
f. In Zone D2 make the extension lines defining the 0.455 MAX DIA refer to the OD of the 9 smaller coils rather than to the OD of the 2 larger coils.
g. In Note 7 change 0.475 to 0.484 and change 0.340 to 0.384.

The ECP was approved with modifications and the final changes are described in NOR A3N5166. The drawing should be changed per this NOR.

Specification Changes

The changes to Specification MIL-S-48755 (AR) necessary to reflect the three changes and to correct minor errors are:

a. Delete paragraphs 3.3 and 4.5.1.1 and all further references to these paragraphs.
b. In paragraph 3.5 change "thirty-two (32) feet" to "twenty-nine (29) feet."
c. In paragraph 3.6 change "140 grams (0.3 pound) min and 410 grams (0.9 pound) max" to "100 grams (0.22 pound) min and 370 grams (0.82 pound) max."
d. In paragraph 3.11.a change "Assemble" to "Assembly."
e. In paragraph 3.11.f change "Ball Lock Ring" to "Ring, Ball Lock."
f. In paragraph 4.4.2.22 Major 104 change "140 grams (0.3 pound) to 410 grams (0.9 pound)" to "100 grams (0.22 pound) to 370 grams (0.82 pound)." Delete Major 101 and Note 2.

g. In paragraph 4.5.1.3.a change "32 feet" to "29 feet."
h. In paragraphs 6.1.a, 6.1.b, and 6.1.c revise to reflect whatever mines use the smaller breakwire, stronger thread and different diaphragm material.

Bobbin Analysis

An analysis of the bobbin assembly was made to determine the amount of stronger thread that can be wound on the bobbin, and to determine the effect of this stronger thread on deployment barrier distance and bobbin assembly CG location. Results of this analysis were submitted to ARRADCOM in a letter from J.H. Lundquist dated 11 May 1983, Subject: Contract DAAK10-83-C-0049, GEMSS ERTS PIP CRDL Requirements.

Thread Length

The stronger thread used on this contract has a larger diameter than the standard thread. Thus, when the standard length (46 $\pm$ 3 feet) of the stronger thread is wound on the Bobbin (9292985), the diameter over the wound thread is significantly larger than when the standard thread is used. This results in interference between the thread and the inside of the Sleeve (9292988), causing assembly difficulties when assembling the Bobbin Assembly (9292982) into the Sleeve. Cut and nicked thread and friction between the thread and Sleeve ID results.

In order to eliminate these problems, less of the stronger thread must be wound on the bobbin. It has been experimentally determined that a maximum of 36 feet of the stronger thread should be used to provide proper assembly and release and to maintain thread integrity. Using a realistic overall length tolerance of $\pm$ 2 feet results in the recommended thread length of 34 $\pm$ 2 feet for the stronger thread.

Deployment Barrier Distance

Because the stronger thread is thicker, less thread can be wound on the bobbin, making the deployment distance less. Deployment test (OEXM 31388) shows that at the standard barrier deployment distance of 32 feet the barrier could not be cleared consistently. When the barrier distance was moved closer at 29 feet, the barrier was cleared consistently. In additional deployment tests on 36 sensors, all cleared the barrier at 29 feet. The three-foot reduction in barrier distance is strictly a function of thread length and has nothing to do with the weight and CG characteristics of the bobbin. The bobbin wound with the stronger thread clears the barrier located at 29 feet just as well as the bobbin wound with the standard thread clears the barrier located at 32 feet.

Center of Gravity

The bobbin analysis shows that the CG shift of the bobbin assembly wound with the stronger thread is 0.002 inch. This is insignificant with respect to sensor deployment characteristics. The weight of the bobbin assembly wound with the stronger thread is 0.0218 gram more than that of the bobbin assembly wound with the standard thread. This weight increase can be eliminated by removing material from the bobbin weight, either by making it shorter or by increasing the diameter of the hole in it. Since the heavier bobbin assembly clears the barrier located at 29 feet just as well as the standard bobbin assembly clears the barrier located at 32 feet, a change to lighten it is unnecessary and is not recommended.

New Minimum and Maximum Limits on Breakwire Strength

The new minimum and maximum breakwire break strength limits were established from the data on 182 ERTS sensors tested on the GATOR PIP program (Contract DAAK10-82-M-0504) and reported in test report OEXM 31388. The former limits of 140 grams minimum and 410 grams maximum resulted in a spread of 270 grams. Based on statistical analysis of the data and past experience on the ADAM program, it is felt that this spread should be maintained. This is also the basis for selecting the new limits of 100 grams (0.22 lb) minimum and 370 grams (0.82 lb) maximum.

QUALITY REPORT

Quality tests conducted for the GEMSS PIP contract were the standard tests: (1) First Article Acceptance Test (FAAT) and, (2) Lot Acceptance Test (LAT). A total of four tests were actually run, consisting of two unsuccessful FAATs, a final successful FAAT, and a single successful LAT for the single delivery lot containing a quantity of 4,500 units. See Appendix A for attachments dealing with quality tests. Attachment 1 is the conditional approval of the FAAT, Attachment 2 is the raw data sheet for this FAAT, Attachments 3 and 4 are the raw data sheets for the first two FAATs and Attachment 5 is the raw data sheet for the LAT.

First Article Acceptance Tests

The first FAAT occurred on 27 July 1983. Failures to release the bobbin (three units) were traced to a machine assembly problem that was damaging the diaphragm. Appropriate corrective action was taken, which eliminated this problem. All existing hardware was scrapped and a new set of units was built.

The second FAAT on 30 August 1983 was unsuccessful due mainly to test errors as well as sample preparation problems. Improper calibration of the pressure system, used in conjunction with the test equipment during cold temperature testing, caused an overpressurization of the diaphragm assembly. When combined with inadequate sealing, it caused separation from the sensor case, resulting in release failures. Appropriate corrective action was taken and a third FAAT was scheduled.

The successful FAAT of 20 September 1983 had the following results:

- One of 82 units experienced post pullout below the 540-gram requirement (recorded for information only)
- One of 82 units failed breakwire force
- One of 32 units failed cold release (see Attachment 2 for test data).

The breakwire and release failures were caused by potting material intrusion under the post cover during sample preparation. The sample's post covers had not been sealed with epoxy prior to potting. This type of defect would not normally occur on shipped units since all sensors would be properly sealed with epoxy prior to shipment. These units were classed as "no tests" and spares were functioned in their place. All subsequent testing has been performed with epoxy sealed sensors.

Following this FAAT, a conditional approval was given by ARDC (see Appendix A). Honeywell's action for achieving full Governmental approval for the first article test was to ensure that all future LATs would be conducted using sample units sealed with epoxy before potting. The production layout was changed to formalize this action. The corrective action was completed and locally approved by DCAS on 14 October 1983.

Lot Acceptance Test

The LAT was conducted on 16 November 1983. The results of this test were as follows:

- One of 80 units failed breakwire force
- Three of 80 units failed post retention and thread strength (see Attachment 5 for test data).

Analysis of the breakwire failure showed that the breakwire retaining ring was not assembled properly, allowing the post to be pulled out of the sensor without breaking the breakwire. Thus, this unit was also counted in the second category as well, for a total of three defective units (not four). No cause was discerned for the other two units that experienced thread breakage below the 540-gram minimum. No corrective action for the above defects has been taken since additional quantities are not being built. The lot was accepted as tested since the defects identified were below allowable defects per the sample plan and AQL's specified.

SPECIAL TESTS

Leakage Test

The leakage test was conducted to determine: (1) the leak rate through undeployed sensors at a sensor pressurization of 75 ± 5 psi, and (2) the leak rate through deployed sensors at their deployment pressure or, if the sensors did not deploy before being pressurized to 300 ± 10 psi, their leak rate at 300 ± 10 psi. All tests were conducted at ambient temperature (75° ± 10°F) and nitrogen gas was used as the pressure medium. Results are contained in test report OEXM 32211 (Appendix B). This test report was also submitted with a letter from J.H. Lundquist dated 6 January 1984, Subject: Contract DAAK10-83-C-0049 GEMSS ERTS PIP Test Report, Langlie Test.

Langlie Test

The Langlie test was conducted to determine sensor tripline deployment at three different square pressure pulse time durations at various pulse pressure levels. Results are also contained in test report OEXM 32211 (Appendix B).

APPENDIX A
FIRST ARTICLE TEST SUMMARY REPORT AND LOT ACCEPTANCE TEST RESULTS

ATTACHMENT 1

1. First Article Test Summary Report US Army Armament Research and Development Center Dover, NJ 07801	2. Date	3. Report No. 463-33
	4. In reply refer to DRSMC-QAM-VF(D)/92	5. Preliminary ☐ Supplemental ☐ Final ☒
6. To Commander DCASPRO Honeywell 2701 Fourth Ave. So. Honeywell Plaza Minneapolis, MN 55408	7. Date initial production sample received at New Brighton, MN (insert location) Date 20 Sept. 1983	
	8. Contract No. DAAK10-83-C-0049	
	9. Contractor Honeywell, Inc.	
10. Complete sample ☒ Partial sample ☐ 3rd Submission	11. Item nomenclature Sensor Tripline, Extended Range.	
12. Quantity As per Contract	13. Inspection in accordance with MIL-S-48755(AR) w/Amend. 5 dtd 5 May 82.	
14. Name(s)	15. Representing	
16. Inspected by R. Flanagan	17. Submitted by A. Siegfried/sfh/201-724-2458	

18. ~~Recommendation of Contracting Activity~~

- ☐ The contractor may proceed with production.
- ☒ The contractor may proceed with production provided the deviations cited under Remark of block 28 are corrected.
- ☐ Corrective action cited on block 28 is required
- ☒ Conditionally Approved.

19. Distribution
Cy Turn: Honeywell, Inc.

R. Currie	MN92-3553
B. Amundson	MN29-3681
P. Rehwaldt	MN29-3681
M. Weidenbach	MN29-3680
J. Lundquist	MN04-1200
C. Files	MN04-1280
E. Ludke	MN29-3561

20. RICHARD W. PORTER
C. Mines & Sel Arm Br
TISD, PAD
✓ CONCURS

Signed: Gael C. Baker
GAEL C. BAKER
ActC, Product Verification Branch

W. F. BELET
Contracting Officer

AERADCOM FORM 51 JUN 78 replaces SMU 1031-R AUG 66 which is obsolete

SHEET 1 OF 3

PREVIOUS PAGE IS BLANK

21. Item/Part Nomenclature	22. Part No.	23. Serial No.	24. Specification No.	25. Specification Paragraph No.	26. Identification	27. Test Pass	27. Test Fail
Tripline, Sensor Extended Range 82 each	9292972 8-19-82	N/A	MIL-S-48755(AR) w/Amend. 5 dtd 5 May 82	4.5.1.2.1	Release of Sensor Assy. at Ambient Temperature	X	
				4.5.1.2.2	Release of Sensor Assy. at Cold Temperature		X
				4.5.13	Tripline Deployment	X	
				4.5.1.4	Breakwire Function Post		X
				4.5.1.5	Retention & Thread Breaking Strength		X
				4.4.2.22	Examination	X	

ARRADCOM FORM 51a JUN 78 replaces SMU 1031-R AUG 66 which is obsolete

SHEET 2 OF 1

28. Summary of failures encountered and required corrective action.

Tripline Sensor, Extended Range, Dwg. 9292972 -

1. One unit failed to release at cold temperature. Major Defect

2. One unit failed breakwire functioning at cold temperature. Breakwire broke at 800 grams in lieu of 100 to 378 grams. Major Defect

3. One unit failed post retention at cold temperature. Post released at 280 grams, min. requirement is 540 grams. Test performed for informational purposes only.

ACTION TO BE TAKEN:

The contractor may proceed with production provided the defects noted above in paragraphs 1 and 2 are corrected to the satisfaction of the QAR.

ARRADCOM FORM 51b JUN 78 replaces SMU 1031-R AUG 63 which is obsolete

SHEET 3 OF 3

ATTACHMENT 2

ERTS
SENSOR ASSEMBLY
9292972
LAT RESULTS SUMMARY

DATE 9-20-83
LOT # P1P (GEMS)
LOT SIZE

B. AMUNDSON	MN29-3681	
G. HANSON	MN29-3680	
R. JOHNSON	MN29-3680	
W. McCABE	MN29-3380	
J. SHEEHAN	MN29-3680	
D. STACHOWSKI	MN29-3680	

MIL-S-48755 PARA. 4.4.2.22

	RESULTS		REQUIREMENT		REMARKS
					BLU-82/B ONLY
102 AMBIENT RELEASE	50/0		50		
102 COLD RELEASE	32/0 *		32		
103 AMBIENT DEPLOYMENT	50/0		50		
103 COLD DEPLOYMENT	32/0		32		
104 BREAKWIRE	82/0 **		82		
105 POST RETENTION AND THREAD STRENGTH	82/1		82		INFORMATION ONLY

NOTES :

** #18 cold BW failure due to potting mat'l under fisheye

* #29 cold FTR Due to potting mat'l in unit because fisheye missing

	RELEASE	DEPLOYMENT	GRAMS	100 TO 370	BREAKLINE*	540 GRAMS MIN.	RETENTION	THD. BREAK	POST PULLOUT	
1	✓	✓		200			1470		✓	
2	✓	✓		140			1480		✓	
3	✓	✓		270			1390		✓	
4	✓	✓		170			1270		✓	
5	✓	✓		160			1300		✓	
6	✓	✓		200			1520		✓	
7	✓	✓		280			1190		✓	
8	✓	✓		200			1450		✓	
9	✓	✓		150			1480		✓	
10	✓	✓		220			1440		✓	
11	✓	✓		140			1350		✓	
12	✓	✓		140			1500		✓	
13	✓	✓		230			1430		✓	
14	✓	✓		160			1380		✓	
15	✓	✓		240			1410		✓	
16	✓	✓		230			1370		✓	
17	✓	✓		130			990		✓	
18	✓	✓		220			1380		✓	
19	✓	✓		210			1050		✓	
20	✓	✓		230			1470		✓	
21	✓	✓		190			1410		✓	
22	✓	✓		230			1490		✓	
23	✓	✓		350			1520		✓	
24	✓	✓		210			1270		✓	
25	✓	✓		210			1480		✓	

	RELEASE	DEPLOYMENT	GRAMS	100 TO 370	BREAKLINE*	540 GRAMS MIN.	RETENTION	THD. BREAK	POST PULLOUT	
26	✓	✓		240			1370		✓	
27	✓	✓		230			1450		✓	
28	✓	✓		370			1290		✓	
29	✓	✓		240			1190		✓	
30	✓	✓		190			1460		✓	
31	✓	✓		160			1370		✓	
32	✓	✓		220			1450		✓	
33	✓	✓		180			1230		✓	
34	✓	✓		160			1110			✓
35	✓	✓		250			1310		✓	
36	✓	✓		200			990		✓	
37	✓	✓		180			1530		✓	
38	✓	✓		200			1510		✓	
39	✓	✓		200			1316		✓	
40	✓	✓		140			1500		✓	
41	✓	✓		190			1480		✓	
42	✓	✓		240			1470		✓	
43	✓	✓		210			1210		✓	
44	✓	✓		180			1450		✓	
45	✓	✓		160			1350		✓	
46	✓	✓		220			1110		✓	
47	✓	✓		170			1330		✓	
48	✓	✓		250			1370		✓	
49	✓	✓		200			1410		✓	
50	✓	✓		180			1500		✓	

* NOTE: NO MORE THAN ONE OF THE FIVE ALLOWABLE DEFECTIVES SHALL EXCEED 544 GRAMS.

	RELEASE	DEPLOYMENT	GRAMS	100 TO 370	BREAKVERS*	540 GRAMS MIN.	RETENTION	TWO - BREAK	POST PULLOUT
1	✓	✓		260		1520		✓	
2	✓	✓		280		1270		✓	
3	✓	✓		260		1480		✓	
4	✓	✓		220		1070		✓	
5	✓	✓		260		1090			✓
6	✓	✓		220		1380		✓	
7	✓	✓		210		1290		✓	
8	✓	✓		230		1350		✓	
9	✓	✓		280		280			✓
10	✓	✓		280		1440		✓	
11	✓	✓		240		1020		✓	
12	✓	✓		220		1490		✓	
13	✓	✓		280		1470		✓	
14	✓	✓		220		780		✓	
15	✓	✓		230		1390		✓	
16	✓	✓		260		1390		✓	
17	✓	✓		280		1320		✓	
18	✓	✓		800		1300		✓	
19	✓	✓		220		1100		✓	
20	✓	✓		280		1460		✓	
21	✓	✓		300		1380		✓	
22	✓	✓		280		1530		✓	
23	✓	✓		300		1280		✓	
24	✓	✓		230		1480		✓	
25	✓	✓		250		1400		✓	
26	✓	✓		220		1360		✓	
27	✓	✓		240		1420		✓	
28	✓	✓		280		1440		✓	
29	FTR								
30	✓	✓		260		1400		✓	
31	✓	✓		240		1480		✓	
32	✓	✓		240		1370		✓	
	✓	✓		290		1470		✓	
	✓	✓		230		1460		✓	

* NOTE: NO MORE THAN ONE OF THE FIVE ALLOWABLE DEFECTIVES SHALL EXCEED 544 GRAMS.

ATTACHMENT 3

ERTS
SENSOR ASSEMBLY
929272
LAT RESULTS SUMMARY

DATE 7/27/83

LOT # card 3-1 FAAT

LOT SIZE

B. AMUNDSON	MN29-3681
G. HANSON	MN29-3680
R. JOHNSON	MN29-3680
W. McCABE	MN29-3300
J. SHEEHAN	MN29-3600
D. STACHOWSKI	MN29-3680

Gemss ERTS PIP DAAK10-83-C-0019

MIL-S-48755 PARA. 4.4.2.22

	RESULTS		REQUIREMENT		REMARKS
102 AMBIENT RELEASE	1/50		50-1-2		
102 COLD RELEASE	2/32		32-1-2		
103 AMBIENT DEPLOYMENT	1/50		50-3-4		
103 COLD DEPLOYMENT	0/32		32-2-3		
104 BREAKWIRE	0/82		82-5-8		
105 POST RETENTION AND THREAD STRENGTH	0/82		82		INFORMATION ONLY

NOTES :

RELEASE	DEPLOYMENT	GRAMS 100 TO 370	BREAKSTRIKE*	544 GRAMS MIN.	RETENTION	TWO. BREAK	POST PULLOUT
1	✓	✓	260	1250		✓	
2	✓	✓	240	1380		✓	
3	✓	✓	290	1300		✓	
4	✓	✓	220	1340		✓	
5	✓	✓	330	1330		✓	
6	✓	✓	260	1350		✓	
7	✓	28.5 Short	280	1350		✓	
8	✓	✓	240	1450		✓	
9	✓	✓	250	960		✓	
10	✓	✓	260	1350		✓	
11	✓	✓	250	1230		✓	
12	✓	✓	240	1410		✓	
13	✓	✓	220	1280		✓	
14	✓	✓	210	1440		✓	
15	✓	✓	230	1440		✓	
16	✓	✓	220	1340		✓	
17	✓	✓	260	1320		✓	
18	✓	✓	230	1300		✓	
19	✓	✓	240	1380		✓	
20	✓	✓	190	1440		✓	
21	✓	✓	270	1250		✓	
22	✓	✓	250	1240		✓	
23	✓	✓	250	1410		✓	
24	✓	✓	260	1370		✓	
25	✓	✓	250	1370		✓	

RELEASE	DEPLOYMENT	GRAMS 100 TO 370	BREAKSTRIKE*	544 GRAMS MIN.	RETENTION	TWO. BREAK	POST PULLOUT
26	PTR						
27	✓	✓	290	1340		✓	
28	✓	✓	270	1450		✓	
29	✓	✓	270	1290		✓	
30	✓	✓	230	1050		✓	
31	✓	✓	210	1300		✓	
32	✓	✓	270	1390		✓	
33	✓	✓	250	1400		✓	
34	✓	✓	220	1260		✓	
35	✓	✓	210	1430		✓	
36	✓	✓	230	1290		✓	
37	✓	✓	290	1390		✓	
38	✓	✓	230	1310		✓	
39	✓	✓	230	1370		✓	
40	✓	✓	260	1190		✓	
41	✓	✓	300	1230		✓	
42	✓	✓	290	980			✓
43	✓	✓	270	1340		✓	
44	✓	✓	330	1310		✓	
45	✓	✓	260	1320		✓	
46	✓	✓	230	1090		✓	
47	✓	✓	270	1450		✓	
48	✓	✓	220	1490		✓	
49	✓	✓	240	1250		✓	
50	✓	✓	280	1300		✓	
7	✓	✓	260	1450		✓	
26	✓	✓	280	1450		✓	

* NOTE: NO MORE THAN ONE OF THE FIVE ALLOWABLE DEFECTIVES SHALL EXCEED 544 GRAMS.

RELEASE	DEPLOYMENT	GRAMS	100 TO 370	BREAKAWAY*	540 GRAMS MIN.	RETENTION	THD. BREAK	POST PULLOUT
1	✓	✓	290		1340		✓	
2	FTR							
3	✓	✓	280		1500		✓	
4	✓	✓	230		1450		✓	
5	✓	✓	370		1280		✓	
6	✓	✓	250		1090		✓	
7	✓	✓	260		1310		✓	
8	✓	✓	230		1390		✓	
9	✓	✓	230		1470		✓	
10	✓	✓	260		1470		✓	
11	✓	✓	230		1290		✓	
12	✓	✓	290		1230		✓	
13	✓	✓	240		1320		✓	
14	✓	✓	260		1300		✓	
15	✓	✓	220		1450		✓	

RELEASE	DEPLOYMENT	GRAMS	100 TO 370	BREAKAWAY*	540 GRAMS MIN.	RETENTION	THD. BREAK	POST PULLOUT
16	✓	✓	220		1460		✓	
17	✓	✓	290		1410		✓	
18	✓	✓	320		1430		✓	
19	✓	✓	280		1320		✓	
20	✓	✓	250		1230		✓	
21	✓	✓	220		1510		✓	
22	✓	✓	220		1430		✓	
23	✓	✓	236		1370		✓	
24	✓	✓	220		1360		✓	
25	✓	✓	190		1410		✓	
26	✓	✓	230		1380		✓	
27	✓	✓	250		840		✓	
28	✓	✓	190		1310		✓	
29	✓	✓	260		1280		✓	
30	✓	✓	170		1310		✓	
31	FTR							
32	✓	✓	180		970		✓	
2	✓	✓	180		1340		✓	
31	✓	✓	180		1370		✓	

* NOTE: NO MORE THAN ONE OF THE FIVE ALLOWABLE DEFECTIVES SHALL EXCEED 544 GRAMS.

ATTACHMENT 4

ERTS
SENSOR ASSEMBLY
9292972
LAT RESULTS SUMMARY

DATE 8-30-83
LOT # FAAT #2
LOT SIZE 82

B. AMUNDSON MN29-3681
G. HANSON MN29-3680
R. JOHNSON MN29-3680
W. McCABE MN29-3300
J. SHEEHAN MN29-3690
D. STACHOWSKI MN29-3680

MIL-S-48755 PARA. 4.4.2.22

	RESULTS		REQUIREMENT		REMARKS
					BLU-92/B ONLY
102 AMBIENT RELEASE	0/50		50		
102 COLD RELEASE	0/32		32		
103 AMBIENT DEPLOYMENT	1/50		50		
103 COLD DEPLOYMENT	0/32		32		
104 BREAKWIRE	9/82		82		
105 POST RETENTION AND THREAD STRENGTH	2/82		82		INFORMATION ONLY

NOTES :

Nine "Blow Aparts" occured during testing. These are not to be counted as any functional failures and spares were tested to finish the test.

	RELEASE	DEPLOYMENT	GRAMS	100 TO 370	MEASURING*	540 GRAMS MIN.	RETENTION	THD. BREAK	POST PULLOUT
1	✓	✓		240			1460	✓	
2	✓	✓		190			1540	✓	
3	✓	✓		170			1460	✓	
4	✓	✓		160			1450	✓	
5	✓	✓		210			1280	✓	
6	✓	✓		170			1380	✓	
7	✓	✓		190			1290	✓	
8	✓	✓		210			1470	✓	
9	✓	✓		290			1440	✓	
10	✓	✓		180			1450	✓	
11	✓	✓		620			1510	✓	
12	✓	✓		270			1400	✓	
13	✓	✓		210			1470	✓	
14	✓	✓		180			1420	✓	
15	✓	✓		260			1280	✓	
16	✓	✓		180			1460	✓	
17	✓	✓		230			1440	✓	
18	✓	✓		170			1580	✓	
19	✓	✓		170			1400	✓	
20	✓	✓		NONE			380		✓
21	✓	✓		160			1340	✓	
22	✓	✓		190			1360	✓	
23	✓	✓		170			1360		✓
24	✓	✓		190			1420	✓	
25	✓	✓		160			1420	✓	

	RELEASE	DEPLOYMENT	GRAMS	100 TO 370	MEASURING*	540 GRAMS MIN.	RETENTION	THD. BREAK	POST PULLOUT
26	✓	✓		190			1440	✓	
27	✓	✓		120			1500	✓	
28	✓	✓		210			1450	✓	
29	✓	✓		220			1410	✓	
30	✓	✓		160			1400	✓	
31	✓	✓		380			1570	✓	
32	✓	UNDER "LOW"		180			1400	✓	
33	✓	✓		170			1230	✓	
34	✓	✓		150			1400	✓	
35	✓	✓		120			1510	✓	
36	✓	✓		210			1460	✓	
37	✓	✓		360			1310	✓	
38	✓	✓		130			1340	✓	
39	✓	✓		240			1490	✓	
40	✓	✓		220			1610		✓
41	✓	✓		640			1180	✓	
42	✓	✓		250			1230	✓	
43	✓	✓		140			1440	✓	
44	✓	✓		170			1170	✓	
45	✓	✓		140			1350	✓	
46	✓	✓		210			1110	✓	
47	✓	✓		180			1580	✓	
48	✓	✓		550			1450	✓	
49	✓	✓		180			1490	✓	
50	✓	✓		210			1410	✓	
#20	✓	✓		210			1180	✓	

* NOTE: NO MORE THAN ONE OF THE FIVE ALLOWABLE DEFECTIVES SHALL EXCEED 544 GRAMS.

	RELEASE	DEPLOYMENT	GRAMS 100 TO 370	BREAKUTRE*	540 GRAMS MIN. RETENTION	THD. BREAK	POST PULLOUT
	BA 1	✓	✓	NONE OR	1450	✓	
	BA 2	✓	✓	NONE OR	1100	✓	
	3	✓	✓	220	1340	✓	
	4	✓	✓	200	1440	✓	
	5	✓	✓	180	1310	✓	
	BA 6	✓	✓	NONE OR	NONE	—	
	7	✓	✓	430	430		✓
	8	✓	✓	NONE	1370	✓	
	9	✓	✓	220	1380	✓	
	10	✓	✓	180	1390	✓	
	11	✓	✓	200	1460	✓	
	BA 12	✓	✓	NONE OR	510		
	13	✓	✓	880	1390	✓	
	14	✓	✓	220	1380	✓	
	15	✓	✓	220	1220	✓	
	SPARES						
SPARE	1	✓	✓	280	1370	✓	
SPARE	2	✓	✓	220	1450	✓	
SPARE	3	✓	✓	240	1340	✓	
SPARE	4	✓	✓	240	1350	✓	
SPARE	5	✓	✓	150	1360	✓	
SPARE	6	✓	✓	170	1300	✓	
SPARE	7	✓	✓	220	1240	✓	
SPARE	8	✓	✓	290	1400	✓	
SPARE	9	✓	✓	180	1320	✓	

	RELEASE	DEPLOYMENT	GRAMS 100 TO 370	BREAKUTRE*	540 GRAMS MIN. RETENTION	THD. BREAK	POST PULLOUT
	16	✓	✓	240	1420	✓	
	BA 17	✓	✓	NONE OR	880	✓	
	18	✓	✓	220	1280	✓	
	19	✓	✓	190	1230	✓	
	20	✓	✓	1430	1430	✓	
	21	✓	✓	230	1400	✓	
	22	✓	✓	220	1300	✓	
	23	✓	✓	170	1310	✓	
	BA 24	✓	✓	NONE OR	NONE	—	
	25	✓	✓	190	1250	✓	
	26	✓	✓	210	1360	✓	
	27	✓	✓	170	1370	✓	
	28	✓	✓	220	1200	✓	
	29	✓	✓	220	950	✓	
	BA 30	✓	✓	NONE OR	NONE	—	
	BA 31	✓	✓	NONE OR	NONE	—	
	BA 32	✓	✓	NONE OR	NONE	—	

* NOTE: NO MORE THAN ONE OF THE FIVE ALLOWABLE DEFECTIVES SHALL EXCEED 544 GRAMS.

BA = BLOW APART

OR = ON RELEASE

ATTACHMENT 5

ERTS
SENSOR ASSEMBLY
9292972
LAT RESULTS SUMMARY

DATE 11-16-83
LOT # 3-1
LOT SIZE 4621

B. AMUNDSON	MN29-3681	
G. HANSON	MN29-3680	
R. JOHNSON	MN29-3680	
W. McCABE	MN29-3300	
J. SHEEHAN	MN29-3690	
D. STACHOWSKI	MN29-3680	

MIL-S-48755 PARA. 4.4.2.22

	RESULTS		REQUIREMENT		REMARKS
101 NON-RELEASE	N/A		80-2-3		BLU-92/B ONLY
102 AMBIENT RELEASE	0/50		50-1-2		
102 COLD RELEASE	0/50		30-1-2		
103 AMBIENT DEPLOYMENT	0/50		50-3-4		
103 COLD DEPLOYMENT	0/50		30-2-3		
104 BREAKWIRE	1/80		80-5-6		
105 POST RETENTION AND THREAD STRENGTH	3/80		80		INFORMATION ONLY

NOTES :

11-21-83
11-21-83
11-21-83
11-21-83
11-22-83

	RELEASE	DEPLOYMENT	GRAMS	100 TO 370	BREAKLINE*	540 GRAMS PEN.	RETENTION	THD. BREAK	POST PULLOUT
1	✓	✓		190			1190	✓	
2	✓	✓		210			1200	✓	
3	✓	✓		210			1330	✓	
4	✓	✓		180			1380	✓	
5	✓	✓		160			1330	✓	
6	✓	✓		130			1310	✓	
7	✓	✓		230			1210	✓	
8	✓	✓		170			1460	✓	
9	✓	✓		220			910		✓
10	✓	✓		200			1260	✓	
11	✓	✓		220			1560	✓	
12	✓	✓		170			1510	✓	
13	✓	✓		120			1450	✓	
14	✓	✓		170			1480	✓	
15	✓	✓		210			1230	✓	
16	✓	✓		150			1390	✓	
17	✓	✓		240			1440	✓	
18	✓	✓		200			1000		✓
19	✓	✓		200			880	✓	
20	✓	✓		210			1370	✓	
21	✓	✓		250			1250	✓	
22	✓	✓		160			1180	✓	
23	✓	✓		260			1330	✓	
24	✓	✓		170			1250	✓	
25	✓	✓		230			1420	✓	

	RELEASE	DEPLOYMENT	GRAMS	100 TO 370	BREAKLINE*	540 GRAMS PEN.	RETENTION	THD. BREAK	POST PULLOUT
26	✓	✓		290			1180	✓	
27	✓	✓		160			1370	✓	
28	✓	✓		270			1410	✓	
29	✓	✓		210			1280	✓	
30	✓	✓		150			1430	✓	
31	✓	✓		230			1250	✓	
32	✓	✓		240			1330	✓	
33	✓	✓		280			370		✓
34	✓	✓		280			1390	✓	
35	✓	✓		190			1500	✓	
36	✓	✓		120			1500	✓	
37	✓	✓		270			1170	✓	
38	✓	✓		140			1480	✓	
39	✓	✓		230			1380	✓	
40	✓	✓		210			970	✓	
41	✓	✓		260			1470	✓	
42	✓	✓		110			1370	✓	
43	✓	✓		210			1380	✓	
44	✓	✓		230			1470	✓	
45	✓	✓		120			1430	✓	
46	✓	✓		220			670	✓	
47	✓	✓		190			920		✓
48	✓	✓		200			1420	✓	
49	✓	✓		240			1310	✓	
50	✓	✓		220			1180	✓	

* NOTE: NO MORE THAN ONE OF THE FIVE ALLOWABLE DEFECTIVES SHALL EXCEED 544 GRAMS.

	RELEASE	DEPLOYMENT	GRAMS 100 TO 370	BREAKTIME*	540 GRAMS MIN. RETENTION	TWO. BREAK	POST PULLOUT	
1	✓	✓	260	1510		✓		
2	✓	✓	300	1310		✓		
3	✓	✓	240	1170		✓		
4	✓	✓	240	1440		✓		
5	✓	✓	230	1410		✓		
6	✓	✓	210	1460		✓		
7	✓	✓	260	1270		✓		
8	✓	✓	270	1480		✓		
9	✓	✓	210	1400		✓		
10	✓	✓	210	1530		✓		
11	✓	✓	220	1400		✓		
12	✓	✓	220	1130		✓		
13	✓	✓	240	1380		✓		
14	✓	✓	230	1450		✓		
15	✓	✓	260	1440		✓		

	RELEASE	DEPLOYMENT	GRAMS 100 TO 370	BREAKTIME*	540 GRAMS MIN. RETENTION	TWO. BREAK	POST PULLOUT	
16	✓	✓	260	1280		✓		
17	✓	✓	190	1390		✓		
18	✓	✓	190	1360		✓		
19			180	1450		✓		
20	✓	✓	230	1440		✓		
21	✓	✓	POST PULLED ON RELEASE				✓	
22	✓	✓	170	1440		✓		
23	✓	✓	180	1220			✓	
24	✓	✓	190	1330		✓		
25	✓	✓	260	1480		✓		
26	✓	✓	160	1340		✓		
27	✓	✓	260	1250		✓		
28	✓	✓	300	1070		✓		
29	✓	✓	270	1210		✓		
30	✓	✓	260	1400			✓	
#21	✓	✓	170	1490		✓		

* NOTE: NO MORE THAN ONE OF THE FIVE ALLOWABLE DEFECTIVES SHALL EXCEED 544 GRAMS.

APPENDIX B
ENGINEERING TEST REPORT OEXM 32211

Honeywell

ENGINEERING TEST REPORT

☐ AVIONICS	DATE 12-29-83	REPORT NUMBER OEXM 32211	
☒ DEFENSE SYSTEMS	DEVELOPMENT NUMBER S4594-AA-6000-2759		PAGE 1 OF 7
ISSUED BY NB103 - D & E Lab	CONTRACT NUMBER DAAK10-83-C-0049		

COPYLIST:

B. Amundson	MN29-3681
R. Currie	MN29-3553
J. Funk	MN29-3682
J. Haley	MN29-3553
J.Lundquist(3)	MN04-1200
T. Martorano	MN29-3682
D. Stachowski	MN29-3680
D. Swanson	MN11-1430
M. Weidenbach	MN29-3680
L. Wilder	MN11-1430
D & E File	MN11-1430
Uniterm File	MN11-1430

KEYWORDS:

GEMSS, XM74
Sensor, Extended
Leakage Rate

ATTACHMENTS:

I Leakage Test Plan (2)
II Langlie Test Plan (2)

UNITS TESTED:

One hundred thirty-five Extended Range Tripline Sensors (9292972 Modified). Modifications consist of the 9298598-1 diaphragm, 0.0035 ± .0001 diameter breakwire and 320 ± 8 Decitrex Thread.

OBJECT OF TEST:

Conduct Leakage Rate and Langlie One-Shot Release Tests as outlined in Attachments I and II.

DOCUMENTATION:

See attached data sheets.

PROCEDURE AND RESULTS:

Leakage Rate:

Each unit was tested as shown on the attached Test Plan except the Nicolet Oscilloscope was set on a slow trace and started before applying pressure to the sensor. The starting pressure (supply pressure cut-off) and the fixture pressure at 30 second intervals as shown in the data sheets were read from the scope trace.

Langlie Test:

Each test was conducted as shown on the attached Test Plan. Initial "no release" and "all release" limits were set at 50 psi and 350 psi respectively.

DATA BOOK NUMBER 0-2431	PAGE 112-117	TEST STARTED 12-5-83	TEST COMPLETED 12-16-83
REQUESTED BY M. Weidenbach	DATE 12-1-83	WRITTEN BY J. Funk/T. Martorano	
DEPARTMENT Production Engineering		APPROVED BY L. D. Wilder	

HE-448 REV 12/78

Initial Leakage Test (75 psi nominal) Sheet 2

	Chamber Pressure (psi)													
Unit	Initial	@ 30 sec	@ 60 sec	@ 90 sec	@ 120 sec	@ 150 sec	@ 180 sec	@ 210 sec	@ 240 sec	@ 270 sec	@ 300 sec	@ 330 sec	@ 360 sec	@ 390 sec
1	76.6	71.3	62.7	55.4	49.6	45.6	42.1	39.6	37.8	36.5	35.7	35.0	34.5	34.4
2	75.1	71.3	66.8	64.8	61.3	58.2	56.1	52.7	51.2	49.7	48.3	47.1	46.0	45.5
3	80.0	75.8	69.3	63.0	58.1	53.7	50.0	47.7	45.2	43.1	42.0	40.6	39.3	38.5
4	80.0	72.4	61.8	54.4	47.9	42.4	38.1	35.7	32.8	30.8	29.5	28.4	28.0	27.4
5	77.0	65.8	57.8	50.6	44.2	38.6	34.0	28.7	26.3	23.1	20.8	18.2	15.9	14.2
6	80.0	70.7	59.1	53.4	47.1	41.5	38.0	34.9	32.4	30.6	29.4	28.6	27.9	27.3
7	77.1	66.8	57.6	49.8	43.4	38.0	33.7	29.8	26.8	24.3	21.8	20.1	18.5	16.6
8	78.1	74.1	68.3	62.3	56.8	52.3	48.4	45.2	42.1	39.6	37.1	35.0	33.0	31.0
9	76.7	60.1	45.8	36.8	30.6	25.4	22.3	19.9	17.9	16.6	15.6	15.1	14.4	14.0
10	75.8	59.2	47.0	37.9	31.0	26.1	22.5	19.3	16.9	15.5	14.3	13.5	12.7	11.5
11	76.9	61.1	47.9	39.2	33.5	29.4	25.9	24.6	21.8	20.4	19.1	18.2	17.3	17.0
12	77.8	59.1	45.4	35.6	28.6	24.0	20.5	17.9	16.5	14.8	13.7	13.1	12.7	12.8
13	79.8	68.6	58.6	45.9	39.0	33.7	29.4	25.6	22.5	21.7	19.9	18.3	16.1	15.6
14	75.8	61.5	49.5	39.8	32.4	26.7	22.1	18.6	16.1	13.9	11.9	10.8	9.8	8.6
15	78.1	64.1	54.4	46.6	40.5	35.1	31.3	28.1	25.6	23.4	21.6	20.2	19.2	18.4
16	76.8	69.9	63.1	57.3	52.0	47.8	44.1	40.7	38.3	36.2	34.3	32.2	30.7	29.4
17	75.3	64.1	52.5	43.7	36.8	31.0	26.4	23.0	20.1	17.7	16.0	14.0	13.3	12.4
18	76.7	60.2	45.5	33.4	24.4	18.4	14.5	11.8	10.1	9.4	9.0	0	—	—
19	76.4	71.6	64.6	57.9	51.9	46.6	42.1	38.5	35.1	32.7	30.3	28.6	27.1	25.6
20	75.8	67.4	59.1	51.7	45.4	40.2	35.8	32.3	29.5	26.9	25.2	23.4	22.3	21.4
21	76.6	69.3	61.1	54.2	48.6	43.6	39.5	36.1	33.5	31.4	29.2	27.7	26.2	25.3
22	74.8	69.5	65.2	61.2	57.2	53.6	51.0	48.1	45.7	43.6	41.8	40.4	39.5	37.7
23	75.4	57.9	45.4	36.6	30.0	25.5	21.7	19.4	17.5	16.1	15.4	14.5	14.1	13.8
24	75.2	59.6	35.3	26.1	20.4	16.6	14.1	12.3	11.2	10.7	10.1	9.8	9.3	8.0
25	75.8	0	(31.7 @ 5 sec, 15.0 @ 10 sec, 8.5 @ 15 sec, 7.9 @ 20 sec)							—	—	—	—	—
26	75.6	64.5	54.1	46.5	40.9	36.9	32.9	29.8	27.3	25.5	24	22.5	21.2	20.3
27	75.3	52.8	44.6	36.8	30.9	26.6	23.6	20.9	19.1	17.6	16.6	15.9	15.2	14.9
28	75.0	67.5	59.7	52.5	46.4	41.3	36.9	33.5	30.8	28.4	26.0	24.2	22.4	19.6
29	74.3	59.8	50.4	42.4	36.1	30.9	26.8	23.4	20.8	18.8	17.2	16.5	16.3	14.8
30	74.8	8.8	(7.5 @ 35 sec, 0 @ 40 sec)				—	—	—	—	—	—	—	—

INITIAL LEAKAGE TEST (75 PSI NOMINAL) SHEET II

Unit	Chamber Pressure (PSI)													
	Initial	@ 30 sec	@ 60 sec	@ 90 sec	@ 120 sec	@ 150 sec	@ 180 sec	@ 210 sec	@ 240 sec	@ 270 sec	@ 300 sec	@ 330 sec	@ 360 sec	@ 390 sec
31	78.0	75.0	70.5	66.5	62.7	59.3	56.1	53.5	50.7	48.0	45.0	43.1	41.3	40.3
32	76.4	75.5	69.9	67.0	64.1	61.3	59.0	56.4	54.3	52.3	50.1	48.4	46.4	44.8
33	76.2	65.6	57.1	50.2	44.9	40.6	36.9	33.7	30.9	28.4	26.4	24.9	23.3	22.0
34	75.6	74.0	72.0	71.4	70.0	68.5	66.9	65.6	63.9	62.8	61.6	60.2	59.4	58.1
35	76.5	64.4	55.0	47.3	41.2	36.0	31.3	27.7	24.3	21.5	19.0	17.0	15.1	13.0

RELEASE PRESSURE LEAKAGE TEST — SHEET I

Chamber Pressure (Psi)

Unit	Initial Reading	@ 30 sec	@ 60 sec	@ 90 sec	@ 120 sec	@ 150 sec	@ 180 sec	@ 210 sec	@ 240 sec	@ 270 sec	@ 300 sec	@ 330 sec	@ 360 sec	@ 390 sec
1	184.0	93.5	57.0	40.5	34.0	30.0	23.0	17.5	0	—	—	—	—	—
2	194.0	187.0	178.0	167.5	158.0	150.0	142.5	136.5	131.5	125.5	121.5	117.0	114.0	111.5
3	138.5	118.5	102.5	90.0	78.0	69.0	61.0	54.0	48.5	42.5	38.0	34.0	29.5	27.0
4	135.0	108.0	82.5	72.0	60.5	50.0	42.0	36.0	31.0	22.0	23.0	20.0	19.0	17.0
5	141.0	120.5	104.5	91.0	79.0	69.0	60.0	52.5	46.5	41.0	37.0	34.0	30.5	27.0
6	145.0	51.0	41.0	38.5	36.0	33.5	31.0	29.5	28.0	27.0	25.0	25.0	24.5	24.5
7	142.5	116.0	94.0	79.5	66.5	56.0	47.5	40.5	35.0	31.0	27.5	24.5	21.5	19.5
8	121.0	96.5	71.0	55.5	44.0	36.0	30.0	24.5	21.5	19.5	17.0	16.0	15.5	15.0
9	105.5	74.0	54.5	41.0	32.0	25.5	21.0	16.5	15.0	13.5	12.5	11.5	11.0	9.5
10	142.0	99.5	70.0	51.5	39.0	29.0	23.5	18.0	17.0	15.0	13.5	12.0	10.5	9.0
11	121.5	102.0	87.5	74.5	64.0	56.0	49.0	44.0	38.0	34.0	30.5	28.0	25.0	23.5
12	148.0	64.5	31.0	18.0	13.5	0	—	—	—	—	—	—	—	—
13	122.5	108.5	96.0	86.0	74.5	61.5	50.5	47.0	35.0	29.0	23.5	20.5	17.0	14.0
14	164.5	102.5	94.0	73.0	58.0	46.5	37.0	29.5	23.5	19.5	15.5	13.0	13.0	11.5
15	141.5	87.5	54.5	35.5	28.0	23.0	19.0	18.5	0	—	—	—	—	—
16	128.0	107.5	91.0	77.5	66.5	56.0	48.0	42.0	36.0	32.0	27.0	23.0	20.0	18.5
17	116.0	88.5	66.0	50.5	37.0	26.0	22.0	21.0	15.0	10.5	6.5	5.5	1.5	0
18	126.5	104.5	85.5	67.0	50.5	35.0	21.0	10.5	1.0	0	—	—	—	—
19	122.0	105.5	100.0	91.5	82.5	75.0	67.5	61.5	55.5	51.5	46.0	42.0	38.5	35.0
20	127.0	104.5	86.5	71.5	59.0	48.0	40.5	33.5	27.0	22.5	19.0	15.0	12.5	8.5
21	91.0	76.5	64.5	55.0	47.0	40.0	34.5	29.5	26.0	24.0	18.5	16.0	13.0	11.0
22	96.0	82.0	73.5	66.0	59.0	54.0	49.0	44.0	40.0	36.5	33.5	33.0	32.0	30.0
23	124.5	104.5	88.5	74.5	64.0	55.0	46.5	40.5	35.0	28.5	25.0	24.0	18.5	16.0
24	142.5	116.5	94.0	78.5	66.0	52.5	39.5	16.5	10.0	6.0	2.5	0.5	0	—
25	123.0	104.0	87.0	76.0	65.0	56.0	48.0	42.0	36.0	31.0	27.0	23.5	20.5	17.5
26	119.5	40.5	20.0	9.5	6.5	0	—	—	—	—	—	—	—	—
27	109.0	73.5	56.0	34.0	28.5	15.5	9.5	5.0	4.5	3.5	2.5	2.5	2.0	2.0
28	121.5	104.0	90.5	78.5	69.0	60.5	53.5	48.0	43.5	39.0	36.0	33.5	30.5	28.5
29	120.5	92.5	72.0	57.5	46.0	38.0	31.5	27.0	23.5	19.5	16.5	15.0	14.0	12.5
30	104.0	79.0	60.0	47.0	37.0	29.0	23.5	19.5	14.5	14.0	11.0	10.5	9.0	8.0

RELEASE PRESSURE LEAKAGE TEST SHEET II

	Chamber Pressure (psi)													
Unit	Initial Pressure	@ 30 sec	@ 60 sec	@ 90 sec	@ 120 sec	@ 150 sec	@ 180 sec	@ 210 sec	@ 240 sec	@ 270 sec	@ 300 sec	@ 330 sec	@ 360 sec	@ 390 sec
31	120.0	110.0	101.0	94.0	86.0	80.0	74.0	68.0	64.0	58.5	54.0	51.0	47.5	45.0
32	117.0	110.0	103.0	96.5	89.5	85.5	80.5	75.0	71.0	67.0	63.0	59.5	56.5	53.5
33	123.0	112.0	100.0	89.5	80.5	72.5	66.0	58.0	53.5	48.5	44.0	39.5	36.5	34.0
34	128.0	124.0	122.5	117.0	116.0	112.5	110.0	107.5	105.0	102.0	100.0	97.5	94.5	92.5
35	123.5	99.0	80.5	68.0	57.0	49.0	43.0	37.0	33.0	29.5	26.0	23.5	21.0	19.5

LEAKAGE TEST - BREAK WIRE & TRIP LINE FORCE

Unit	Break Wire (Grams)	Trip Line (Grams)
1	230	920
2	250	940
3	260	1590
4	180	1020
5	240	1040
6	250	1200
7	280	1020
8	200	1400
9	190	1310
10	220	1340
11	240	1130
12	290	1200
13	240	1050
14	210	1330
15	180	1040
16	240	1120
17	250	1260
18	240	1330
19	220	1140
20	230	1440
21	240	1200
22	230	1310
23	240	1230
24	220	1140
25	260	1320
26	240	1120
27	200	1040
28	260	1220
29	230	1250
30	250	1160
31	230	1330
32	260	1410
33	230	1240
34	280	1180
35	220	650

LANGLEY Release TEST

50 ms Pulse					75 ms. Pulse					100 ms Pulse			
Unit	Press (psi)	Release	Non Release		Unit	Press (psi)	Release	Non Release		Unit	Press (psi)	Release	Non Release
1	200	X			31	200	X			61	200	X	
2	125	X			32	125	X			62	125	X	
3	87.5		O		33	87.5		O		63	87.5		O
4	106.25	X			34	106.25		O		64	106.25		O
5	96.75		O		35	228	X			65	228	X	
6	101.5		O		36	139	X			66	139	X	
7	225	X			37	84.5		O		67	84.5		O
8	160	X			38	116.5		O		68	116.5	X	
9	130		O		39	139	X			69	103		O
10	145	X			40	132.5		O		70	110		O
11	137.5	X			41	146.5	X			71	169	X	
12	93.75		O		42	143	X			72	144.5	X	
13	116		O		43	140	X			73	127	X	
14	138	X			44	95		O		74	118.5		O
15	127	X			45	117		O		75	122.5	X	
16	121		O		46	128	X			76	120	X	
17	128	X			47	122.5	X			77	119		O
18	124.5	X			48	120	X			78	240	X	
19	87		O		49	118.5		O		79	115	X	
20	105		O		50	119		O		80	92.5		O
21	116		O		51	130	X			81	121	X	
22	127	X			52	125		O		82	102.5	X	
23	121	X			53	122.5	X			83	115.5		O
24	118		O		54	126.5	X			84	118		O
25	123	X			55	122.5		O		85	131.5	X	
26	121	X			56	124.5		O		86	125		O
27	119.5		O		57	127	X			87	128	X	
28	123		O		58	126	X			88	126.5	X	
29	125.5		O		59	125	X			89	121		O
30	126.2	X			60	82.5		O		90	124	X	

TEST PLAN

GEMMS/ERTS LEAKAGE TEST

1.0 Purpose

The purpose of the test is to determine the rate of pressure leakdown through the sensor.

2.0 Test Procedure

2.1 Initial leakage.

2.1.1 Install sensor in release socket of pressure chamber.

2.1.2 Pressurize chamber with nitrogen gas to 75±5 psi.

2.1.3 Close shut off valve to chamber and start Nicolet Oscilloscope trace.

2.1.4 Record pressure trace on Floppy Disc.

2.2 Function and leakage

2.2.1 Attach continuity meter to breakwire leads for continuous monitoring.

2.2.2 Increase pressure in the chamber at a steady rate until tripline deploys or to 300±10 psi.

2.2.3 Close shutoff valve to chamber and start Nicolet Oscilloscope trace.

2.2.4 Record pressure trace on Floppy Disc.

2.2.5 Pull trip line along longitudinal axis of sensor and record the force to break the break wire and the force to break the trip line.

2.3 Repeat (2.1) and (2.2) on 35 sensors at ambient temperature (75±10°F).

3.0 Fixture Design

The fixture design is shown on the attached drawing.

4.0 Pass/Fail Criteria.

There is no pass/fail criteria.

Submitted by: J. E. Funk
Principal Engineer

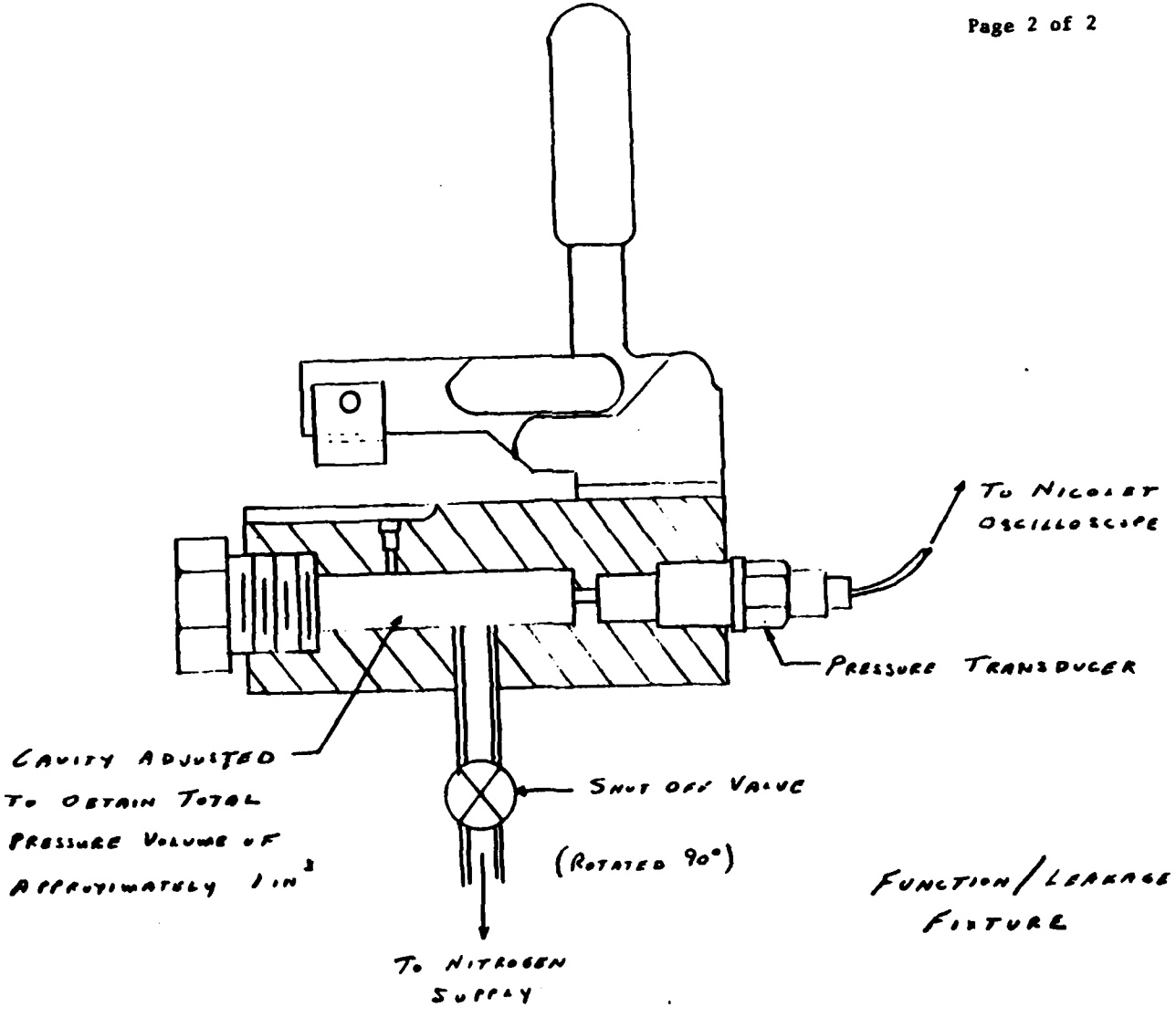

FUNCTION/LEAKAGE FIXTURE

ATTACHMENT II

TEST PLAN

GEMMS/ERTS LANGLIE TEST

1.0 Purpose

The purpose of the test is to determine the pressure level/pulse time characteristics to produce trip line deployment.

2.0 Test Procedure

2.1 Test A

2.1.1 Adjust pressure input solenoid to produce a square wave pulse of 50±5ms duration. Check that pressure rise and fall rates are 50 psi/ms minimum.

2.1.2 Adjust pressure input level desired. (Estimate expected release level from results of leakage test for first trial).

2.1.3 Install sensor in release fixture, pressurize and record result.

2.1.4 Repeat 2.1.2 and 2.1.3 (for a total of 30 units) using the Langlie test procedure per MIL-STD-331A and a new sensor for each trial.

2.2 Test B

2.2.1 Repeat 2.1 except the pulse duration will be adjusted to 75±5ms duration.

2.3 Test C

2.3.1 Repeat 2.1 except the pulse duration will be adjusted to 100±5 ms duration.

3.0 Fixture Design

The fixture design is shown on the attached drawing.

4.0 Pass/Fail Criteria

There is no pass/fail criteria.

Submitted by: J. E. Funk
Principal Engineer

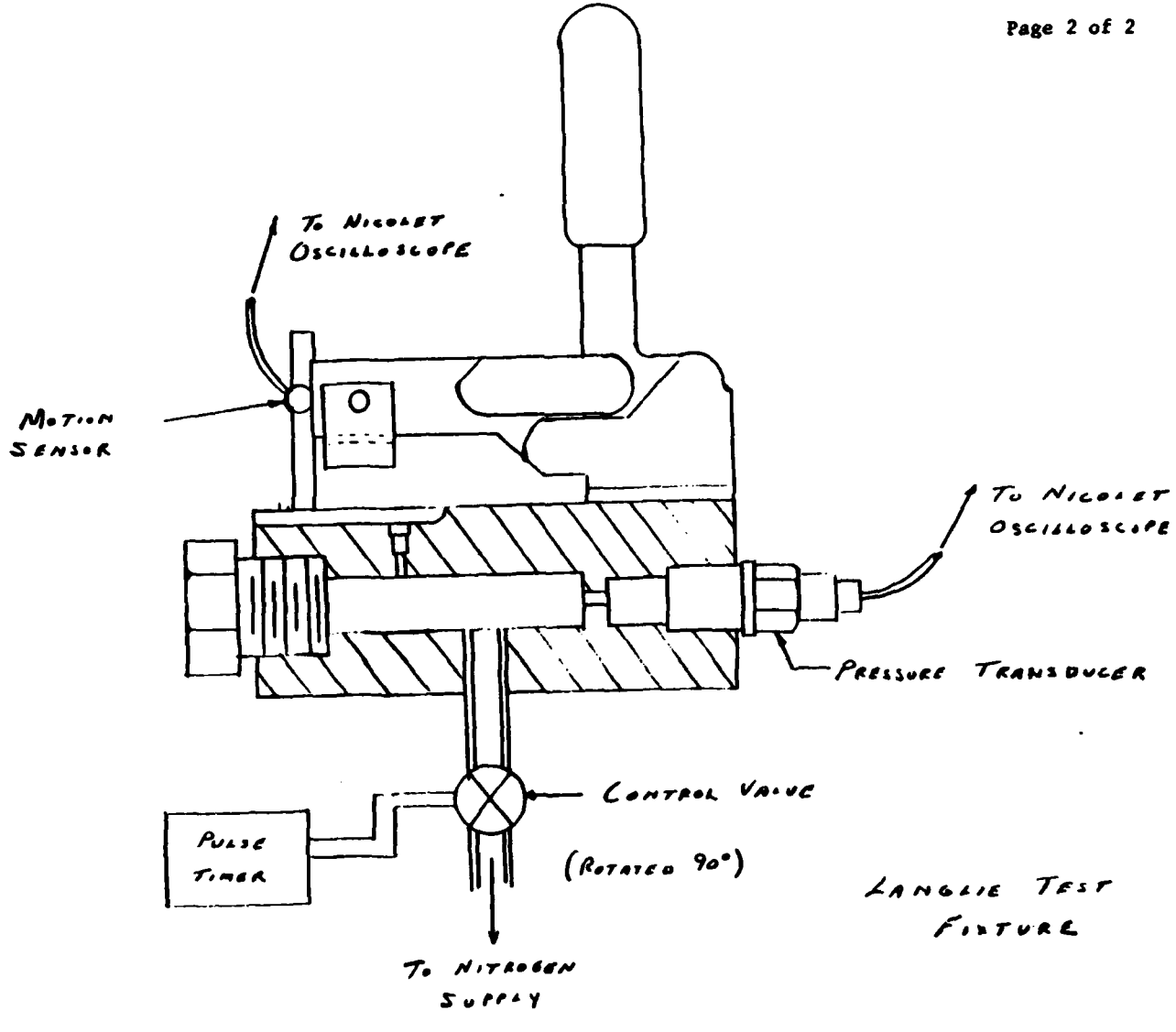

Langlie Test Fixture

Distribution List

Commander
Armament Research and Development Center
U.S. Army Armament, Munitions and Chemical Command
ATTN: DRSMC-TSS(D) (5)
DRSMC-LCU-CM(D) (2)
Dover, NJ 07801

Administrator
Defense Technical Information Center
ATTN: Accessions Division (12)
Cameron Station
Alexandria, VA 22314

Director
U.S. Army Materiel Systems Analysis Activity
ATTN: DRXSY-MP
Aberdeen Proving Ground, MD 21005

Commander/Director
Chemical Research and Development Center
U.S. Army Armament, Munitions and Chemical Command
ATTN: DRSMC-CLJ-L(A)
DRSMC-CLB-PA(A)
APG, Edgewood Area, MD 21010

Director
Ballistics Research Laboratory
Armament Research and Development Center
U.S. Army Armament, Munitions and Chemical Command
ATTN: DRSMC-BLA-S(A)
Aberdeen Proving Ground, MD 21005

Chief
Benet Weapons Laboratory, LCWSL
Armament Research and Development Center
U.S. Army Armament, Munitions and Chemical Command
ATTN: DRSMC-LCB-TL
Watervliet, NY 12189

Commander
U.S. Army Armament, Munitions and Chemical Command
ATTN: DRSMC-LEP-L(R)
Rock Island, IL 61299

Director
U.S. Army TRADOC Systems
Analysis Activity
ATTN: ATAA-SL
White Sands Missile Range, NM 88002

END

FILMED

10-84

DTIC