AD-A151 834 DESIGNING VLSI (VERY LARGE SCALE INTEGRATED) CIRCUITS FOR TESTABILITY(U) AIR FORCE INST OF TECH WRIGHT-PATTERSON AFB OH SCHOOL OF ENGINEERING M KAPLAN 1/2

UNCLASSIFIED DEC 84 AFIT/GE/ENG/84D-39 F/G 9/5 NL

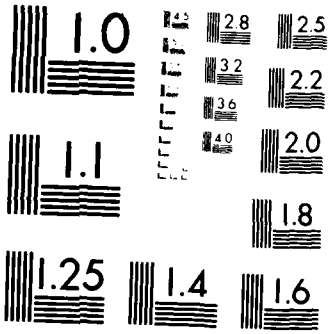

MICROCOPY RESOLUTION TEST CHART
NATIONAL BUREAU OF STANDARDS 1963 A

REPRODUCED AT GOVERNMENT EXPENSE

AD-A151 834

DESIGNING VLSI CIRCUITS FOR TESTABILITY

THESIS

Michael Kaplan, B.E.E.
Captain, USAF

AFIT/GE/ENG/84D-39

DTIC FILE COPY

This document has been approved for public release and sale; its distribution is unlimited.

DTIC
ELECTE
APR 01 1985
S D
E

DEPARTMENT OF THE AIR FORCE
AIR UNIVERSITY
AIR FORCE INSTITUTE OF TECHNOLOGY

Wright-Patterson Air Force Base, Ohio

85 03 13 087

DESIGNING VLSI CIRCUITS

FOR TESTABILITY

THESIS

Michael Kaplan, B.E.E.
Captain, USAF

AFIT/GE/ENG/84D-39

AFIT/GE/ENG/84D-39

DESIGNING VLSI CIRCUITS FOR TESTABILITY

THESIS

Presented to the Faculty of the School of Engineering

of the Air Force Institute of Technology

Air University

In Partial Fulfillment of the

Requirements for the Degree of

Master of Science in Electrical Engineering

DTIC
COPY
INSPECTED
1

Michael Kaplan, B.E.E.

Captain, USAF

December 1984

A-1

Approved for public release; distribution unlimited

Preface

The purpose of this study was to investigate methods of designing a circuit that would be highly testable when completed. This subject is of great interest to the government as well as private industry. The more testable a circuit is, the more time and money can be saved once a device is fabricated. It is for these reasons that I chose this topic.

During this study, methods were examined to design testable circuits, and were implemented in a design of my own. Although not completely self-testing, the design should give you a feeling for the difficulty of designing such a circuit, and the ease of testing it.

In would like to thank my faculty advisor, Lt Col Harold W. Carter, for his assistance and guidance throughout this effort. Also I would like to thank the Air Force Institute of Technology library staff for their help. Finally, I wish to thank my wife Cherie for her support and understanding throughout these last 18 months.

Michael Kaplan

Table of Contents

	Page
Preface	ii
List of Figures	v
List of Tables	vi
Abstract	vii
1. Problem Definition and Review of Literature	1-1
Background	1-1
Problem	1-2
Current Technology	1-4
Thesis Approach	1-9
2. Summary Discussion of Design for Testability	2-1
Controllability and Observability	2-1
Controllability	2-2
Controllability Transfer Function	2-3
Output Controllability Values	2-6
Observability Values	2-7
Observability Transfer Factor	2-8
Input Observability Values	2-16
Testability Values	2-17
Scan-Path Design	2-19
Scan-Path Design and LSSD	2-21
Design Rules for LSSD	2-26
Advantages of LSSD	2-27
Disadvantages of LSSD	2-28
Signature Analysis	2-29
Cyclic Redundancy Check Technique	2-30
Signature Analysis Technique	2-32
Self-Test Function	2-34
Built-In Logic Block Observation	2-36

3. Statement of Requirements and Justification . . 3-1

Functional Requirements 3-1
Performance Requirements 3-4
Implementation Requirements 3-5

4. System Design 4-1

Project Statement 4-1
Preliminary Circuit Design 4-2
Test Plan and Scenario 4-4
Operational Scenario 4-6

5. Detailed Design 5-1

Major Subsystems 5-1
Test Procedure and Scenario 5-8

6. Evaluation of Self-Test 6-1

Design Effort 6-1
Chip Layout Area 6-4
Test Effort 6-5
When To Use Self-Test 6-7

7. Conclusion 7-1

Appendix A: CIFPLOTS of Major Subsystems A-1

Appendix B: CIFPLOT of Chip Layout for Chapter 5 Design B-1

Appendix C: CLL files for Chapter 5 Design C-1

Appendix D: PLA Equation (.equ) Files for the PLA's in Chapter 5 . . . . . D-1

Bibliography BIB-1

List of Figures

Figure		Page
2.1	CTF calculations for combinational devices	2-4
2.2	Singular cover of AND gate	2-10
2.3	Propagation D-Cube of OR gate	2-11
2.4	Sample circuit for path sensitization . . .	2-13
2.5	Example of OTF calculations	2-15
2.6	Symbol and logic for the shift register latch	2-23
2.7	LSSD double latch design	2-25
2.8	16 bit feedback shift register	2-30
2.9	Signature analysis designed circuit	2-34
2.10	Self-test scheme	2-35
2.11	Basic BILBO element (2 bits shown)	2-37
2.12	BILBO Scan-path mode	2-38
2.13	BILBO LFSR mode	2-39
4.1	Preliminary circuit design (block diagram).	4-3
5.1	Test Stimuli Generator	5-2
5.2	Linear Feedback Register (block diagram). .	5-3
5.3	Final block diagram for complete chip design	5-7
A.1	Test Stimuli Generator (counter)	A-2
A.2	Linear Feedback Shift Register	A-3
A.3	Traffic Controller PLA	A-4
A.4	Comparator PLA	A-5
B.1	Traffic Controller with test circuitry . .	B-2

List of Tables

Table		Page
2.1	d-Intersection operator	2-14
3.1	Transition table for light controller . . .	3-2
5.1	Test generation data for self-test	5-10
6.1	Effort to design circuit elements in Chapter 5	6-4
6.2	Chip layout area used in Chapter 5 design	6-6

Abstract

Very large scale integrated circuits are difficult to test once fabricated. This is due to the large number of internal circuit nodes that are not accessible as probe points, and the small number of primary inputs and outputs available to exercise and observe these internal nodes. Methods to develop test vectors for such circuits (e.g. d-Algorithm) are both difficult and time consuming. For this reason a method is needed to design circuits which are highly testable or self-testing.

Using computer aided design tools, a circuit is designed which exhibits a self-test scheme. The design concepts used include level-sensitive scan design and signature analysis. When completed the circuit is evaluated from the standpoint of how much design effort, circuit area used, and test effort compares with the same parameters for a circuit without testability characteristics included.

Environmental dependency (the conditions of circuit operation) is an important consideration when determining if self-test capability is warranted. When the circuit is one which is inaccessible after deployment or needed without much testing time available, self-test capability is

worthwhile. This is a very necessary capability for satellite systems or systems which must be replaced without delay (e.g. component of F-16 fire control system).

For circuits which are strained for space on a semiconductor chip due to their complexity, self-test capability may not be practical due to the increased area used for such circuitry. Finally, self-test capability offers little help in determining the location of a fault if the circuit malfunctions. Therefore, if deterministic fault analysis is required, self-test capability will not provide the necessary data.

1. PROBLEM DEFINITION AND REVIEW OF LITERATURE

Background

How to test a system is a prime consideration when designing a system. This is also true even when the system under consideration is on a single semiconductor chip. As technology advanced during the late 1960's, the number of individual devices (transistors) on a single chip grew. In the 1970's it was possible to put as many as one thousand devices on a single chip. With this device density, the problem of testing a system became harder to solve. As a result, the ability to generate test patterns automatically and conduct fault simulations with high fault coverage declined (13:9).

In the late 1970's the state-of-the-art in chip design increased from hundreds of devices on one chip to thousands of devices on one chip. This technology is known as very large scale integration (VLSI). With the emergence of VLSI technology, it has become possible to put an entire processing unit on a single chip. This system is known as a microprocessor and is the heart of all modern day computers. With literally hundreds of thousands of devices on such systems, the testing problem has increased drastically.

Testability refers to the ability to easily detect the presence and location of as many faults within a system as possible. It has become an important factor which affects both the lifetime cost and the initial manufacturing cost of a digital system (7:17). Because of these costs, some manufacturers are foregoing rigorous testing approaches and are accepting the risk of shipping defective products (13:9).

Problem

Because of the increased use of VLSI circuits in the development of military systems, these circuits must be readily available in the field. To be readily available these circuits must also be highly testable. The present problem is that these circuits are not easily tested by the end user once they are delivered. It is for this reason that a method must be identified that will allow the design of testable VLSI circuits. The goal of this study is to identify a good method of designing testable VLSI circuits which is easily implemented

VLSI systems are difficult to test for the following three reasons: (1) The number of possible faults is

extremely large. A VLSI circuit contains thousands of basic components and interconnecting lines, all individually subject to failure; (2) Access to internal components and lines is severely limited by the small number of input/output (I/O) connections available; and (3) Because of the large number of possible faults which can occur, adequate fault coverage will require a large number of test patterns (7:17).

The purpose of this study is to investigate the current methods of designing for testability and to design a circuit which will exhibit the characteristics necessary to be highly testable. The circuit to be designed will be complex enough to show the advantages of self-test versus traditional testing methods.

Two parameters which should be understood when discussing testability are controllability and observability. Controllability is the ease with which test input patterns can be applied to the inputs of a subcircuit by exercising the inputs of the primary system. Observability is the ease at which the outputs of a subcircuit can be determined from the outputs of the primary system (7:22). Controllability and observability can be used to predict the difficulty of generating test patterns for the primary circuit. This is discussed in detail in Chapter 2.

Self-testing refers to the ability of the circuit to provide an error-detecting output as well as data output. This error-detecting output contains information as to whether or not the data is in error. This differs from controllability and observability in that self-test requires the addition of hardware and/or software to the chip specifically for testing purposes.

Current Technology

There exist precise techniques for quantifying the testability of a circuit. The previously mentioned concepts of controllability and observability are measured by these techniques.

Although these testability quantifying techniques exist, measuring the testability of a circuit is only the first step in solving the testability problem. Once a circuit is known not to be highly testable, methods must be identified which when incorporated into the design process increase testability. The following is a summary of the more popular methods for measuring testability.

Computer-Aided Measure for Logic Testability (CAMELOT) (1:8-37) is an algorithmic testability analysis system. In

using this method, testability is quantified for each circuit node. This is accomplished by determining the controllability of each input node and then implementing a process to transfer the controllability values across devices in order to calculate values of other nodes. A similar process is used to calculate observability values for a circuit node (1:9). This has the effect of giving a topological description of the circuit in terms of its testability. Once this is accomplished, areas of poor testability can be easily identified. This helps the test generation engineers as well as the circuit designers.

A testability analysis algorithm for combinational VLSI circuits known as VLSI Identification of Controllability Testability, Observability, and Redundancy (VICTOR) is currently being used. This algorithm identifies all potential single redundancies and computes the controllability and observability at every single-stuck fault location in the circuit (11:397). This algorithm is presently implemented in FORTRAN 77 and is undergoing evaluation at the University of California, Berkeley, CA.

Controllability and Observability Measurement for Testability (COMET) (2:364) is a testability analysis and design modification software package developed at United Technologies Microelectronics Center. This design package

has been implemented as part of a comprehensive computer aided design system known as the Highland Design System. COMET was developed as an extension of the SCOAP program which was developed by L. Goldstein at Sandia National Laboratories (2:365).

These methods, while adequate in performing their intended function, do not improve a circuits testability. Design methods must be identified to increase the testability of a circuit. Several of these will now be mentioned beginning with the most widely used method today, the scan design technique.

Scan design techniques are techniques which allow a synchronous circuit (a device with stored-state devices and feedback) to be tested as a combinational circuit. In stored-state devices, the next state of the device depends on both the primary inputs and the current state of the device. The dependency of the next state on the current state is what causes the test generation problem. The test programmer only has control over the primary inputs of a traditionally designed circuit which means the state of the device is neither directly controllable or observable (1:48).

To solve this problem a circuit must be designed which will exhibit the following characteristics:

a. The stored-state devices can be tested independently from the rest of the circuit.

b. The next-state of the device can be set to any value desired.

c. The outputs of the combinational logic which inputs the stored-state devices can be directly observable (1:48).

By using a design method which accomplishes these characteristics the circuit will be scan-path designed.

The most common implementation of scan-path design is level-sensitive scan design (LSSD). To be considered level-sensitive, a circuit state must be controlled by the level of a control clock, not the clock edge transition. Also, the steady-state response of the circuit must be independent of the circuit propagation delays and the clock rise and fall times (5:462-463).

By combining the level-sensitive and scan-path design techniques, a sequential circuit can be designed which can be tested without being dependent on a large number of input, output, or intermediate probe points. This LSSD circuit can now be tested using traditional test generation techniques used for combinational circuits.

Another design technique which can be used in concert with LSSD is signature analysis. Signature analysis is a process by which data is input into a circuit and then clocked out through varying circuit nodes. As the information passes through a node it is also input into a shift register. The information in the register is then fed back through a series of exclusive-OR gates in such a manner that the resulting bit pattern in the register is the signature of that node. Then if the signature of the node is the same as the signature of a "correct" node from a "good" circuit, the circuit passes the test. By combining this process with LSSD, the nodes chosen may be nodes other than primary inputs or primary outputs. This gives the circuit self-test capability.

Another self-test technique is to use a circuit element which can be made to operate as a shift register, a scan-path element, or a Built-In Logic Block Observation (BILBO) element (1:72-73). By using BILBOs as circuit elements, the signature of a circuit node can be determined without an external signature analysis circuit element. By taking this technique one step further, the signature produced by the BILBO element can be compared to the correct signature on-chip. Therefore, the circuit correctness can

be determined entirely on-chip. This has the effect of saving testing time and test designer effort (8:415).

Once the circuit has been designed, test generation techniques can be used to develop a comprehensive test of the circuit. One such method is used to develop tests for scan designed circuits. This algorithm is known as Path Oriented Decision Making (PODEM). Another algorithm developed specifically for LSSD circuits is called Random Path Sensitizing (RAPS) (1:83). These methods are mentioned only to inform the reader that test generation techniques exist specifically for LSSD circuits. Therefore, a test engineer does not have to rely solely on test generation techniques used for purely combinational logic.

Thesis Approach

This chapter has described the problems involved in testing a VLSI device. In addition, it has discussed some of the techniques currently available to determine circuit parameters such as controllability, observability and testability. Finally, some of the concepts of designing testability into a circuit were discussed. They will be examined in detail in Chapter 2.

Chapter 2 of this thesis will examine a specific method of measuring the testability of a circuit. This is to give the reader an idea of the difficulty involved in testing a circuit by traditional means. Following this, Chapter 2 will examine some of the more popular design methods for increasing the testability of a circuit as well as making a circuit self-testing. Many of these techniques will be incorporated in the design of Chapter 5.

Chapters 3, 4, and 5 show the requirements, system design, and detailed design respectively for the self-test system to be designed.

Finally, Chapter 6 discusses the evaluation of the self-test technique and gives some guidelines as to when to use it.

2. SUMMARY DISCUSSION OF DESIGN FOR TESTABILITY

This chapter will expand on some of the more important concepts discussed in the previous chapter. From this chapter, the reader should be able to grasp the effort involved in designing a testable circuit. In addition, the concepts described here will be applied to the design of a sample circuit later in this thesis. The purpose of the latter will be to illustrate these concepts.

Controllability and Observability (1:8-37)

Before designing a testable circuit, one must be able to quantify testability. As mentioned in the previous chapter, the two ways of quantifying testability are controllability and observability. Each of these concepts will now be explained.

The first step in producing test patterns for a system is to identify the subunits of the system. By breaking up a circuit into smaller subsystems, the job of testing is made much easier. The problem which follows however, is finding a way to establish fixed values on the inputs of a

subsystem. The inputs of a subsystem may be nodes internal to the overall system and therefore are not primary inputs. These nodes must then be initialized by assigning values to the primary inputs. The ease at which a node is initialized by assigning values to the primary inputs is defined as its controllability (1:9).

Once the subsystem is initialized, its response must be observed for correctness. Since only the systems primary outputs are visible to the tester, the subsystem output nodes response must be propagated through to them. The ease at which this process is accomplished is known as observability (1:9).

There are many ways of calculating controllability values (CY) and observability values (OY). This section will describe a method developed by R. G. Bennetts (1:8-37) known as Computer-Aided Measure for Logic Testability (CAMELOT).

Controllability.

In order to assign a CY to a circuit node, a range of CYs must be established. Let a CY of 1 denote a node that can be directly and easily controlled, and a CY of 0 denote

a node which cannot be controlled at all. Most CYs of nodes, in reality, will fall somewhere between 0 and 1. A primary node however, will always have a CY of 1 since it is always directly controllable.

Consider a device with several inputs and outputs. Assuming that the inputs were directly controllable (CY = 1), the CY of the output would be determined by the ease at which the output could be set to a 0 or a 1. This is known as the transfer function of the device. If the inputs of the device are not directly controllable, the CY values of the inputs must also be taken into account. Therefore, the expression for controllability is shown in Eq (2.1).

$$CY(\text{output node}) = CTF \times f\{CYs(\text{input nodes})\} \qquad (2.1)$$

CTF denotes the controllability transfer function of the device.

Controllability Transfer Function.

The CTF of an output is a measure of the ease at which a 1 can be generated at the output compared with the ease at which a 0 can be generated at the output. The equation used

to quantify the CTF is as shown in Eq (2.2) (1:10).

$$CTF = 1 - \left| \frac{N(0) - N(1)}{N(0) + N(1)} \right| \qquad (2.2)$$

In Eq (2.2), N(0) is the total number of ways a 0 can be produced at the output and N(1) is the total number of ways a 1 can be produced at the output (1:10). It can be seen from this equation that if N(0) and N(1) are equal, then the CTF will be equal to 1.

For purely combinational devices, N(0) and N(1) can be determined from the device truth tables. Consider the examples in Figure 2.1.

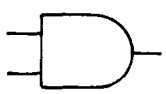

N(0) = 3
N(1) = 1
CTF = 0.75

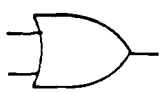

N(0) = 1
N(1) = 3
CTF = 0.25

Figure 2.1 CTF calculations for combinational devices.

For sequential circuits, those with stored-state devices, the calculation for CTF is different. The first step is to create a truth table for the device under consideration. Next, create a boolean expression for an output. This expression must then be expanded so it is in a sum of products form. Each term in this expression now represents a collection of 1-entries.

Consider the equation of the output Q+ of a JK flip-flop:

$$Q+ = JQ'TPC + KQTPC + QT'PC + P' \qquad (2.3)$$

As long as all the product terms in this equation are disjoint (no conjunctive term overlaps another) then N(1) can be calculated.

To calculate N(1), first determine N(1) for each term. Let the number of terms equal n. Also, let the number of variables in a single term equal j. Then the N(1) of a term is equal to $2^{(n-j)}$.

Therefore, for each term, the results are as follows:

TERM	N(1)
JQ'TPC	2
K'QTPC	2
QT'PC	4
P'	32
	40

The total number of N(1) entries are 40. However, some of these entries would create an unstable output. These invalid states must be discarded. The following combinations of inputs produce invalid states:

INPUTS	NUMBER OF INVALID STATES
P=0, C=1, Q=0	8
P=1, C=0, Q=1	8
P=0, C=0, Q=0	8

These 24 states must be subtracted from the original 40 N(1) states. This leaves 16 valid states, therefore N(1) = 16.

To calculate N(0), start with the total number of states, and then subtract the invalid states and the N(1) states. In this case, N(0) = 64 - 24 - 16 = 16. This yields a value of 0.8 for the CTF of Q+.

Output Controllability Values.

The next step is to compute the output CY values. As stated previously, the CY(output node) = CTF X f{CYs(input nodes)}. To calculate the function f, two situations must be considered. One situation is when the circuit is clocked, and one is when the circuit is unclocked. For the

unclocked mode, a simple arithmetic mean of the inputs is used. For the clocked mode, the CY of each clock-controlled input must be multiplied by the CY of the clock signal before the mean is formed. Once these values are calculated, the CY of the output can easily be found using Eq (2.1).

Observability Values.

As with CY values, OY values range between 0 and 1. An OY value of 1 is assigned to a node which is completely observable. This applies to a primary output. The OY then decreases as a nodes observability decreases.

Again, as with CY values, OY values of internal circuit nodes are dependent on the Observability Transfer Factor (OTF). This factor is related to the ease at which a change on an input can be propagated to an output (1:16).

When a test programmer wishes to propagate data through a circuit, a propagation path must be identified from the input to the output. In order to propagate the signal, the path chosen must be sensitized. To sensitize the path, certain node input values must be set which implies controllability of those nodes. Therefore, the

observability of a node is directly related to the CY values of the related input values. The relation between these factors is shown in Eq (2.4).

$$OY(\text{at output}) = OTF \times OY(\text{at input}) \times g(\text{CYs on supporting inputs}) \qquad (2.4)$$

Observability Transfer Factor.

First, the OTF must be determined. The OTF from an input I to an output O is denoted OTF(I-O). This value will range between 0 and 1. An OTF of 0 denotes that there is no way of propagating data from input to output. An OTF of 1 indicates that the data is always propagated from input to output.

The exact calculation of a node OTF involves the use of concepts of the d-Algorithm. The two factors involved are propagating d-Cubes (PDCs) and non-propagating d-Cubes (NPDCs). Each PDC identifies the input to be sensitized, the supporting input values which will support the path, and the sensitized path output. Each NPDC identifies the sensitized path input, the supporting input values which block the path, and the insensitive output. The manner in

which the values are determined is shown in the following paragraphs.

The basic premise of the d-Algorithm is to sensitize all possible paths from the site of a possible fault to all circuit outputs simultaneously. This differs from the path sensitization method in that the d-Algorithm generates all possible paths and it also does this in a methodological manner.

There are three major steps involved in implementing the d-Algorithm. They are as follows:

1. Determine which gate in the circuit will be tested. This gate will be tested in terms of its inputs and output.

2. Generate all possible paths from the gate under test to all outputs simultaneously. When each path is considered, check if reconvergent fanout has occurred, making the path useless. If so, cancel this path. This step is known as the d-drive.

3. Construct an input vector which will excite all the paths generated during the d-drive. This is an algorithmic process that duplicates the effort involved in the backward trace phase of the path sensitization method.

There are three entities or conditions that must be understood before an implementation of the d-Algorithm can be used for CY and OY analysis. These are: (1) singular

cover; (2) the propagation d-Cube; and (3) the primitive d-Cube of a failure. Each of these will now be discussed.

The singular cover of a logic gate is a compacted truth table for that gate (4:30). Consider the gate and its singular cover in Figure 2.2.

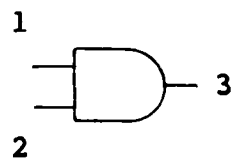

	1	2	3
C1 =	1	1	1
C2 =	x	0	0
C3 =	0	x	0

x = don't care

Figure 2.2 Singular cover of AND gate.

Each row in the truth table is called a cube, and each cube establishes a relation between the inputs and the output of the gate. Cube C1 of Figure 1 states that if input 1 and input 2 have logic 1's on them, then output 3 will be a logic 1. Cube C2 states that output 3 will be a logic 0 if input 2 is a logic 0, regardless of the value of input 1.

In addition, the singular cover of a combinational circuit is comprised of the singular covers of the gates which comprise it.

The propagation d-Cube (6:24-26) is the notation of a cube which forces an input to be the sole determining factor in the value of the output of a gate. The symbol "d" is

used as the variable. It can take on the value of either a logical 1 or 0, however, all d's in a cube must take the same value.

An example can be seen in Figure 2.3

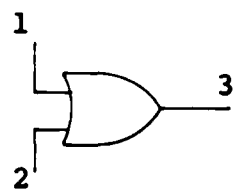

1	2	3
d	0	d
0	d	d

Figure 2.3 Propagation D-Cube of OR gate.

The first cube of Figure 2.3 can be expanded as follows:

1	2	3
1	0	1
0	0	0

It states that output 3 will equal input 1 as long as input 2 is a logical 0.

For simple cases, the propagation d-Cubes can be written down by inspection, however for more complex cases, an algorithm is needed.

The algorithm is implemented by intersecting the cubes of the gate's singular cover. Only those cubes with

different output values are intersected, and the cubes are intersected using the following rules:

("0 ^ 0" denotes the statement "0 intersecting 0")
(0 ^ 0) = (0 ^ x) = (x ^ 0) = 0
(1 ^ 1) = (1 ^ x) = (x ^ 1) = 1
(x ^ x) = x
(1 ^ 0) = d
(0 ^ 1) = d'

Therefore, for the gate in Figure 2.2, the propagation d-Cubes are as follows:

		1	2	3
C1 ^ C2	=	1	d	d
C1 ^ C3	=	d	1	d

The primitive d-Cube of a failure (6:21-24) is used to show a test for a failure in terms of the inputs and output f the failed gate. Primitive d-Cubes of a failure are constructed just as was done for the propagation d-Cubes. However, here the cubes to be intersected are chosen differently. One cube is chosen from the failure free gate. The other cube is the corresponding cube (input-wise) from the failed gate. The inputs are intersected as before. The outputs are intersected by the following convention.

If the output is a logical 0 in the failure free gate, and the output of the failed gate is a logical 1, then the output of the intersection of these cubes is a d'. If the

values are reversed, the output of the intersection is a d.

When combining two or more gates in succession, we wish to generate a sensitized path from the input of the first gate to the output of the second (4:33). Consider the circuit in Figure 2.4.

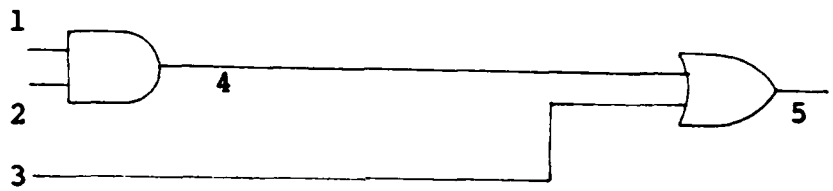

Figure 2.4 Sample circuit for path sensitization (4:33).

The propagation cubes we wish to intersect to generate a path from signal 1 to signal 5 are: (1) C1 = d1xdx; and (2) C2 = xx0dd. These cubes are intersected using the following rules:

d @ x = d

1 @ x = 1

x @ 0 = 0

d @ d = d

x @ d = d

Where "@" is known as the d-Intersection operator. The @ operator is completely defined in Table 2.1.

@	0	1	x	d	d'
0	0	i	0	w	w
1	i	1	1	w	w
x	0	1	x	d	d'
d	w	w	d	u	y
d'	w	w	d'	y	u

Table 2.1 d-intersection operator (4:33).

Therefore, C1 @ C2 = d10dd = C3.

In Table 2.1, i means the d-Intersection is empty, w means it is undefined, u (only u in the intersection) means that d @ d = d and d' @ d' = d', and y (only y in the intersection) means the same as u. If both u and y exist in the same intersection, the intersection in undefined and therefore invalid.

The number of PDCs for one input-output pair is denoted N(PDC:I-O). Likewise, the number of NPDCs for one input-output pair is denoted N(NPDC:I-O). The OTF for an input-output pair can now be calculated as seen in Eq (2.5).

$$OTF(I-O) = \frac{N(PDC:I-O)}{N(PDC:I-O) + N(NPDC:I-O)} \qquad (2.5)$$

This can also be stated as follows:

$$OTF(I\text{-}O) = \frac{N(SP:I\text{-}O)}{N(SP:I\text{-}O) + N(IP:I\text{-}O)} \qquad (2.6)$$

where N(SP:I-O) is the total number of sensitized paths between input and output, and N(IP:I-O) is the total number of unsensitized paths between input and output.

Consider the examples in Figure 2.5.

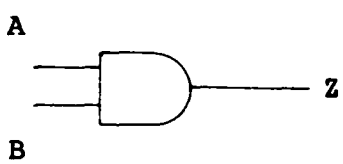

N(PDC:A-Z) = 1
N(NPDC:A-Z) = 1
OTF(A-Z) = 0.5
OTF(B-Z) = 0.5

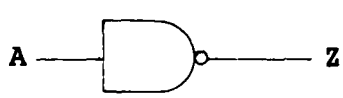

N(PDC:A-Z) = 1
N(NPDC:A-Z) = 0
OTF(A-Z) = 1.0

Figure 2.5 Example of OTF calculations.

For stored-state devices, calculating the OTF is more difficult. It can be done as follows:

a. identify all possible combinations of inputs.

b. delete those which create unstable states.

c. decide which combinations of inputs result in the propagation of a fault. This must be done for each input for every valid state.

d. the number of combinations of inputs which result in the propagation of a fault for any one input, is the number of sensitized paths of that input. All other paths for that input are non-sensitized paths.

e. the OTF for each I-O pair can now be calculated using Eq (2.6).

Input Observability Values.

Now that the OTF is calculated, a method is needed to calculate the input OY values. To accomplish this, the multiplicative property of OY values must be stated. It is as follows:

OY(A-C) = OY(A-A) X OY(A-B) X OY(B-C)

The next step is to calculate OY(A-B) and OY(B-C). OY(A-B) = OY(A-A) X (difficulty in transfering a value from

A to B). The difficulty factor can be further broken down to equal OTF X (the average CYs of the supporting inputs). Since the CYs and OTF have already been calculated, the OY of the node under test is a straightforward exercise. There are several methods that can be used to determine the OYs of circuit nodes. The method which takes the least time is to calculate the OY at each primary output and then work back toward the inputs. This method requires only one pass through the circuit for each primary output.

A special case to be considered is path reconvergence (1:23). If a circuit has path reconvergence of unequal length, OY values are calculated for the shortest path and the other paths should be blocked. For path reconvergence of equal length, the OY value is calculated for both paths and the higher value is used. The other path should then be blocked.

Testability Values.

At this point, both the controllability values and observability values have been calculated. The next step is to use these values to calculate a value for the testability of each circuit node, and then for the entire circuit. The

equation for testability of each node (TY(node)) is as follows:

$$TY(node) = CY(node) \times OY(node) \qquad (2.7)$$

This ensures that the value of TY will also fall between 0 and 1.

Once the TY nodal values are calculated, a figure of testability merit is given to the entire circuit as follows:

$$TY(circuit) = \frac{\text{(sum of nodal TYs)}}{\text{number of nodes}} \qquad (2.8)$$

The method described above for determining CY, OY, and TY values are the principles behind CAMELOT. As stated previously, this is only one way of quantifying these three circuit characteristics.

Once the CAMELOT process is complete, the results are very helpful to the design and test engineers. If the engineers know a circuit has a section that is not very testable, a decision can be made as to the relative gains of redesigning the circuit to make it more testable. The CAMELOT results will also have an impact on the future circuit designs as well.

Scan-Path Design

After describing several methods to measure a circuits testability, other methods are needed to design a testable circuit. Scan-path design fills this need. This section will briefly describe the principle behind scan-path design. A more thorough description will be given in the next section. That section will discuss the most popular implementation of scan design, LSSD.

The basic principle behind scan design is to provide the ability to test the stored-state circuit elements apart from the rest of the circuit (1:48). This is accomplished by inserting a multiplexer immediately before each stored-state device. The multiplexers are controlled by a single SCAN SELECT signal. When the signal is low, the stored-state devices are connected to the combinational circuitry as would be done in a non-scan-path designed circuit. When the signal is high, the stored-state devices are reconfigured into a single, serial shift register (1:48-49).

The purpose of scan-path design is threefold:

a. As stated previously, to allow the stored-state devices to be tested separately from the combinational elements in a circuit.

b. To allow the tester to preset the present or

next state of the sequential circuit under test.

c. To allow the tester to directly observe the outputs of the combinational circuitry which input the stored-state devices (1:48).

The following events can now be accomplished:

a. Reconfigure the stored-state devices to a serial shift register.

b. Shift in a specified state to start the test.

c. Reconfigure the circuit to its normal mode of operation.

d. Clock the circuit a specified number of times.

e. Again reconfigure to the shift register mode (scan-path mode).

f. Shift out the combinational circuits outputs.

Because of the limited number of primary inputs and outputs inherent in VLSI devices, scan-path design is an ideal way to directly enhance controllability and observability in these type of circuits.

A more detailed discussion of scan-path design follows as well as a discussion of LSSD.

Scan-Path Design and LSSD

There are two independent principles behind level-sensitive scan design. They are level-sensitive design, and scan-path design. Each of these principles will now be discussed.

A logic subsystem is considered to be level-sensitive if the steady state response to any allowed input state change is independent of the circuit and wire delays within the subsystem. Also, if the input state change involves more than one input signal change, the order in which they are changed does not effect the steady state response of the output (5:462-463).

By designing a system using the above criteria, the circuits dependency on ac parameters such as rise and fall time, and propagation delays is reduced (1:53).

Scan-path design refers to the ability to transform all internal storage elements in such a way as to operate them as shift registers. This has the effect of transforming a sequential circuit into a combinational circuit. By doing this, test generation techniques for combinational circuits, such as the d-Algorithm, can be applied. This greatly reduces the complexity of test generation for the circuit under test.

To accomplish the first design objective, level-sensitivity, the basic storage element should be one which does not contain a hazard or race condition. To satisfy this restraint, the polarity hold latch was chosen as the basic storage element. This latch has two input signals and one output signal. The input signals are a clock signal C, and a data input signal D. The output is a data output signal L.

When C = 0, the latch cannot change state. When C = 1, the state of the latch is determined by the value of D. The value of D should only change when C = 0. Then when C = 1, the state of the latch will change. C should not change to 1 before the value of D has had a chance to stabilize. This causes the latch output L, to be set to the new value of D when the clock signal C occurs. The clock signal must remain high for some value T, where T is the time required for the signal to propagate through the latch. By latching in this manner, the change in latch value is not dependent on the rise or fall time of the clock signal (5:463).

By causing the polarity hold latch to operate as a shift register, the second design objective, scan-path design, can be achieved.

To create a shift register latch (SRL) with polarity hold latches, the configuration in Figure 2.6 is implemented.

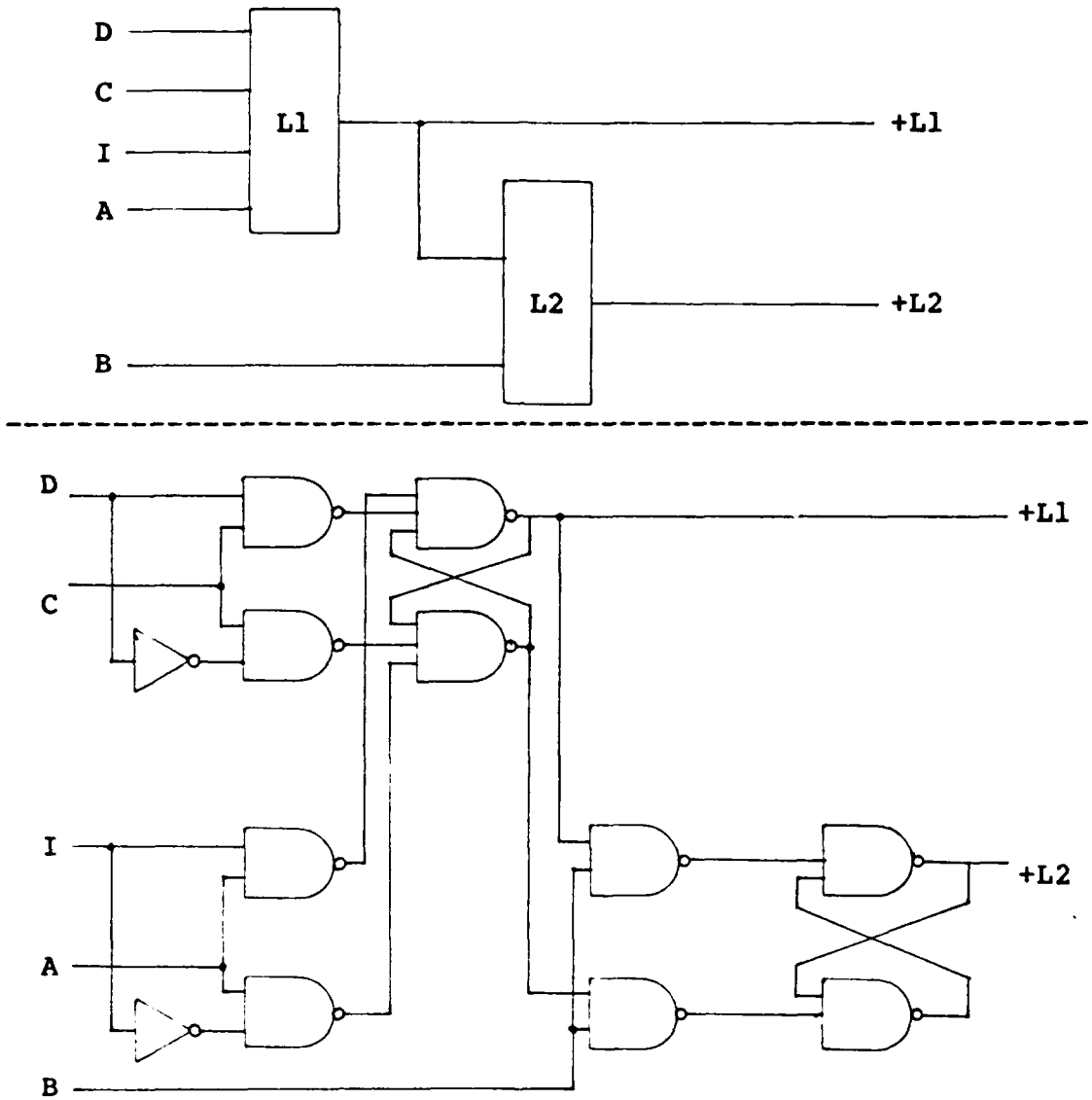

Figure 2.6. Symbol and logic for the shift register latch (13:16).

To operate this circuit as part of a scan path, clock signal A is set to a 1. This allows scan data input I to be latched into L1. Then, as clock signal A is set to 0, clock signal B is set to 1. This transfers the value in L1 to L2. As clock signal B returns to 0, the value in L2 is permanently latched (1:54).

Once the SRL is designed, several SRLs are connected to form a scan-path shift register. This is accomplished by connecting the L2 output of one SRL to the scan data input I of the following SRL. This continues until all the SRLs are connected. Clock signals A and B are common to all the SRLs (1:54). A particular configuration of an LSSD circuit known as a double latch (Double latch indicates that L1 and L2 are in the system data path. There are other designs such as the single latch where L1 is the system output and L2 is the scan path output.) is shown in Figure 2.7

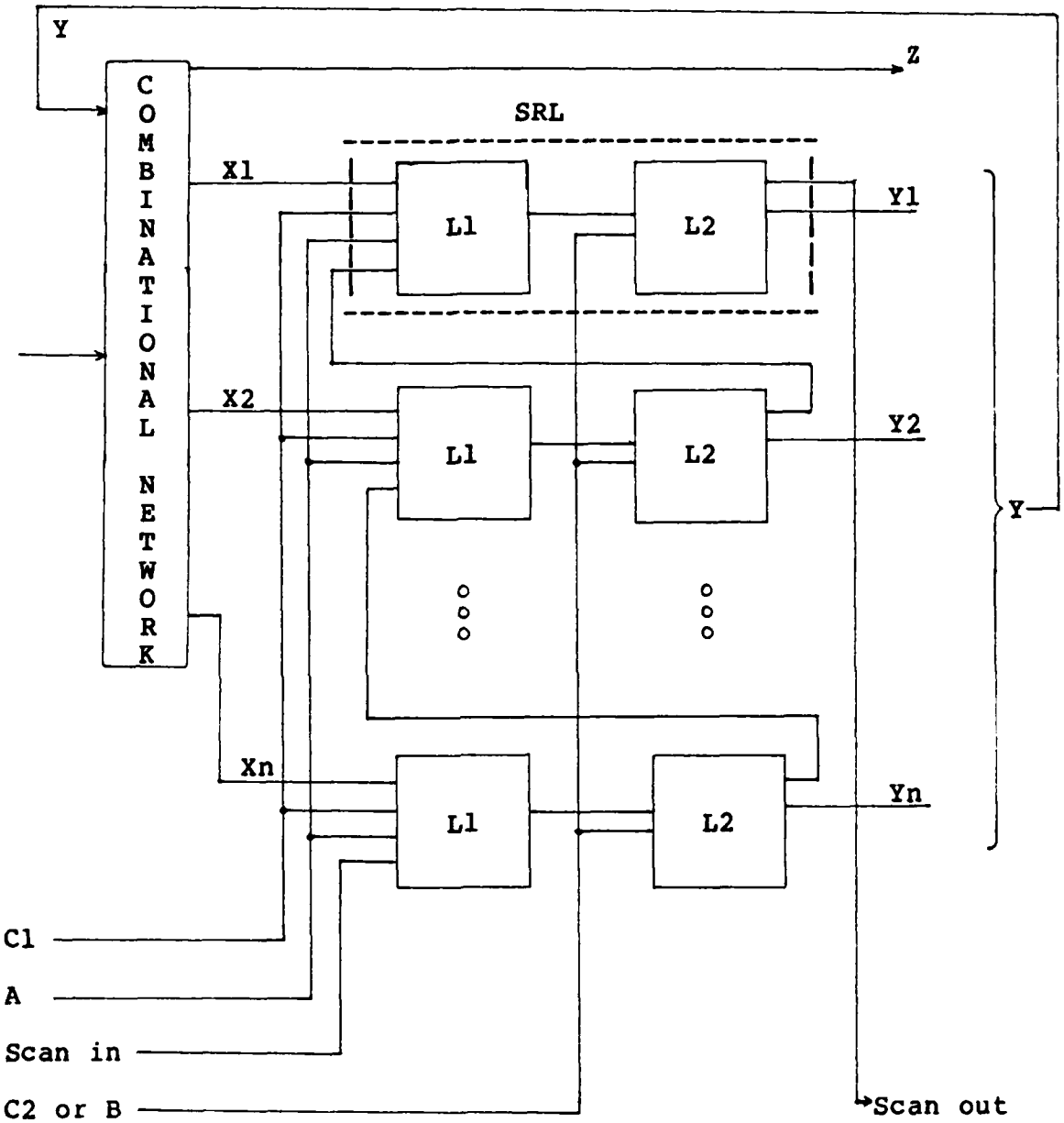

Figure 2.7 LSSD double latch design (5:465).

Design Rules for LSSD.

The following design rules, when adhered to, will result in a circuit which has the characteristics of LSSD. If a circuit meets rules 1-4, it is said to be level-sensitive. If it meets rules 5 and 6, it is scan-path designed.

1. All internal storage elements must be implemented in polarity-hold latches.

2. The latches must be controlled by two or more non-overlapping clocks such that latch X may feed the data port of latch Y, if and only if, the clock that sets the data into latch Y does not clock latch X.

3. All clock inputs can be set low independent of one another and any one clock can be set high independent of the other clock inputs.

4. Clock primary inputs cannot feed SRL data inputs either directly or indirectly. They may feed only clock inputs.

5. All system latches are implemented as part of an SRL. All SRLs must be interconnected into one or more shift registers each having one scan-in input, one scan-out output, and scan control clocks.

6. There must exist some primary condition, controllable from the primary inputs, known as the

"scan-state" such that:

a. All SRLs are connected as a scan path.

b. All SRL clocks, except the shift clocks A and B, can be held inactive.

c. All shift clocks are controlled by the corresponding primary input clock.

The major advantages and disadvantages of LSSD will now be discussed.

Advantages of LSSD.

The advantages of LSSD are the following:

1. Because the operation of the system under test is independent of the ac characteristics of the circuit, many tests will be eliminated which test for such things (5:466).

2. For scan designed circuits, test generation is required for only combinational logic. This task is not as difficult as designing tests for sequential circuits. Algorithmic procedures can be used for test generation (1:61).

3. The state of every latch in the system can be examined during any one clock pulse without disturbing the state of the system. This is assuming that all the data is

shifted back into the latches in the same order it was shifted out (5:466-467).

Disadvantages of LSSD.

The major disadvantages of LSSD are the following:

1. The system package will require four additional I/O pins for the signals I, A, B, and Y.

2. Polarity-hold latches are two to three times more complex than simple latches. This has the effect of increasing real-estate usage by approximately 20%, and lowering reliability (5:467).

3. External asynchronous input signals must not change more than once every clock cycle. This is because a full clock cycle is needed to latch the input data (5:467).

4. The scan design implementation places constraints on the design of a logic circuit. Many stored-state devices currently in use will not be acceptable because they do not meet the LSSD criteria (1:61).

Level-sensitive scan design is a design method which alleviates some of the problems associated with testing a completed circuit. Test generation techniques associated with combinational logic can be used with sequential logic

if the system was designed using LSSD.

Additional testing schemes such as signature analysis, which will be discussed next, can be used in concert with LSSD to further enhance the circuits testability. This is especially useful when the circuit under test has few probe points.

With the problem of controllability and observability inherent in any VLSI circuit, LSSD provides a valuable alternative to traditional design and testing methodologies.

Signature Analysis

A circuit which has been designed using the principles of LSSD is said to be testable. However, a method is available which would allow an LSSD circuit to be even more testable. In fact, a circuit could be designed in such a manner as to allow self-test capability.

Before discussing self-test further it is necessary to describe signature analysis in detail. This is because signature analysis combined with LSSD comprise the self-test design strategy.

Cyclic Redundancy Check Technique.

A circuit is needed which will provide the location of a failure in a combinational circuit. The most common circuit to perform this function uses a data compression technique and is known as a Cyclic Redundancy Check (CRC) (1:63).

CRC produces a circuit node signature and is the basis for signature analysis. The principle of CRC is as follows:

a. Binary data is sampled at a specific circuit node.

b. The data is shifted into a feedback shift register as shown in Figure 2.8.

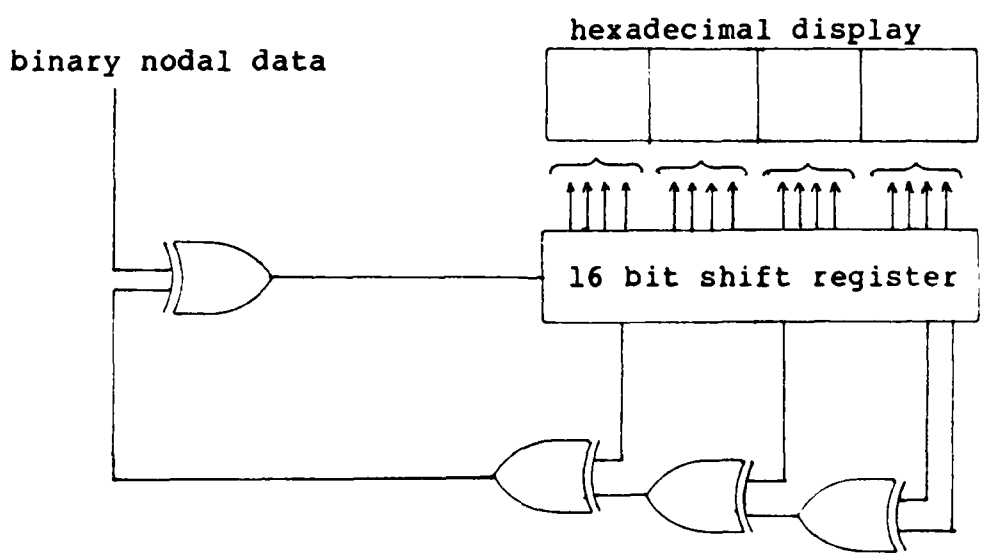

Figure 2.8 16 bit feedback shift register.

The initial contents of the register is set to all 0s.

c. After a predetermined number of clocked shifts into the register, the hexadecimal value of the register is displayed.

d. The hexadecimal value is compared against a predetermined "correct signature" for that node.

Because of the register feedback path, any corruption of the nodal binary data will result in a incorrect hexadecimal display for that node. There is a possibility that a faulty bit stream will result in a correct nodal signature. However, the probability of this occurring is 1 in 2^n (1:63) where n is the number of bits in the shift register. This is extremely small and therefore is neglected.

The bit stream which is shifted into the device under test should ideally be one that will exercise all possible faults for the circuit. Methods can be used (such as the d-Algorithm) to develop bit streams for the required fault coverage.

In order to find the location of a possible fault, the nodal signature of a primary input is compared to a correct signature for that node. If it is the same, the next node in the circuit is checked. Each node toward the primary outputs, in turn, is then checked until an incorrect signature is found. In this way, the location of a fault can be determined.

Now that a method of determining a nodal signature has been identified, it is desirable to implement the circuit in such a manner as to have the test stimuli generated on the same chip as the device under test. This is known as the signature analysis technique.

Signature Analysis Technique.

There are two features which must be added to a circuit in order for it to be designed to signature analysis standards. As stated earlier, it must have an on-board test stimuli generator. Secondly, it must have the ability to break its global feedback paths (1:68). The on board test stimuli generator can take one of two forms. It can be implemented as read only memory (ROM). This type of circuit generates algorithm produced type data (e.g. d-Algorithm). The other form of test generator produces pseudo-random test stimuli. This type of generator could be implemented as a counter.

Although deterministic test stimuli sensitize every path from the inputs to the outputs, pseudo-random test stimuli may be sufficient. A rule of thumb which may be used is known as the node excitation requirement (1:69). This

requirement states that every circuit node changes value at least once due to the test stimuli placed on the primary inputs.

Global feedback paths must be broken for the following reason: A failure in one node (assuming the node is in the feedback path) will cause the failure to be observed at many other nodes. This makes it very difficult to determine the location of the original fault (3:133).

A typical signature analysis approach is shown in Figure 2.9.

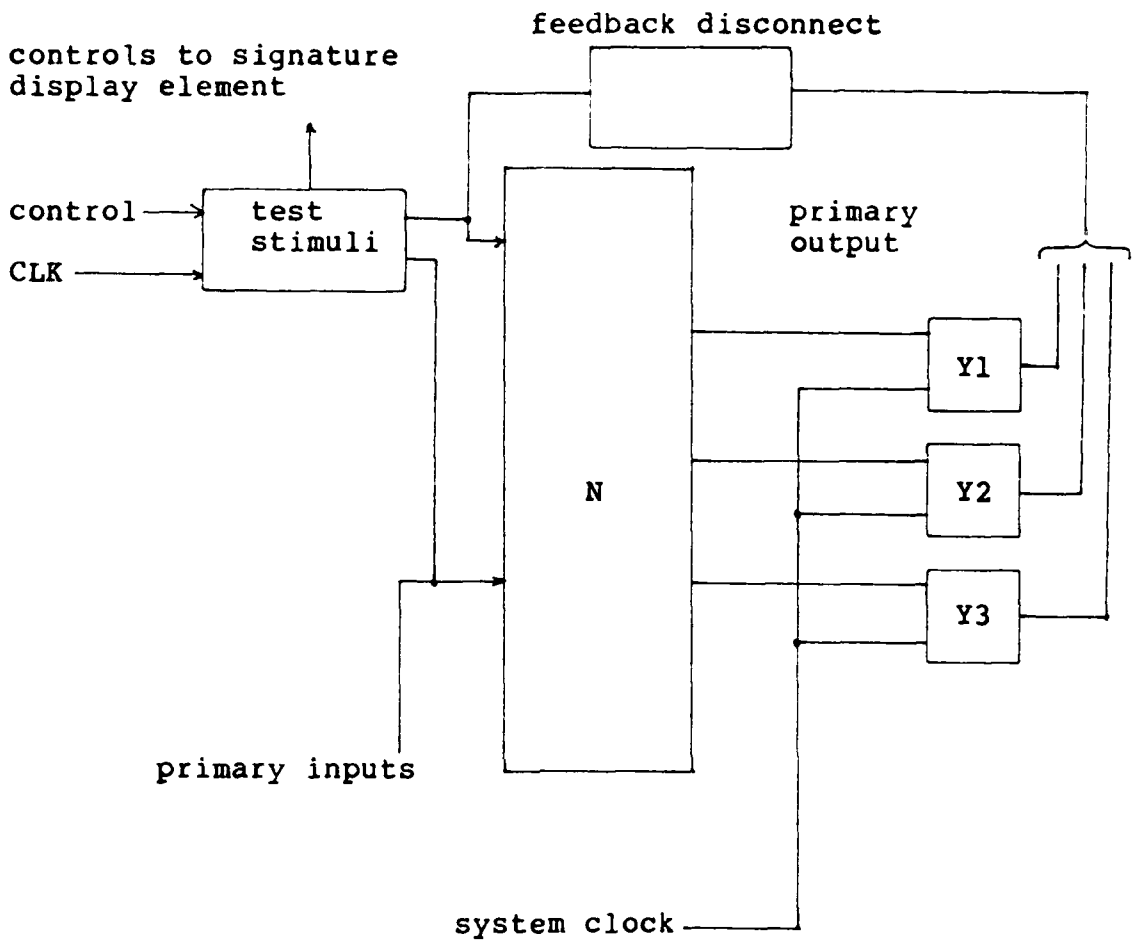

Figure 2.9 Signature analysis designed circuit (1:68)

Self-Test Function.

Now that signature analysis has been discussed, the idea of simplifying testing can be taken one step further.

Instead of analyzing the nodal signatures off-chip, it is possible to include a signature compare function on the chip. If this were done, a chip could be produced which would not only provide test stimuli, but also compare test output to a correct output. Then the chip would provide the test engineer (or user) with a go/no go output (1:70).

A scheme for providing the self-test capability is shown in Figure 2.10.

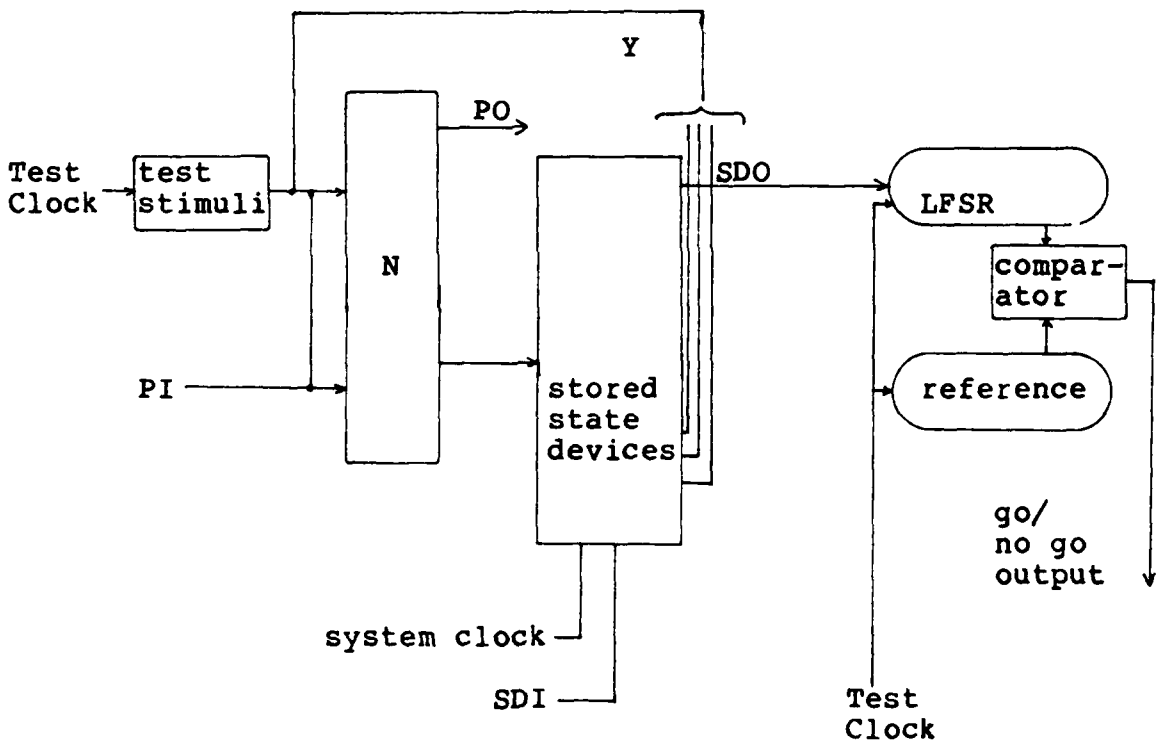

Figure 2.10 Self-test scheme (1:71).

The scan out data is clocked into a linear feedback shift register (LFSR). This produces the signature of the circuit in the test mode. This signature is then compared to a bit stream located in the reference register. If the signatures match, the go/no go line is set high. Otherwise, it is set low.

By using this method, the test is transparent to the user. Only the go/no go signal is observed. A disadvantage of this simplicity however, is that if the signal indicates a no go condition, it is difficult to discover the location of the fault.

Built-In Logic Block Observation (BILBO)

In order to make self-testing circuitry easier to design, it is desirable to use a register that can be used for both data transfer and fault detection purposes. This device is known as a BILBO element (9:40).

Each BILBO element is composed of a flip-flop register row with additional gates for shift and feedback operations. A BILBO element is shown in Figure 2.11.

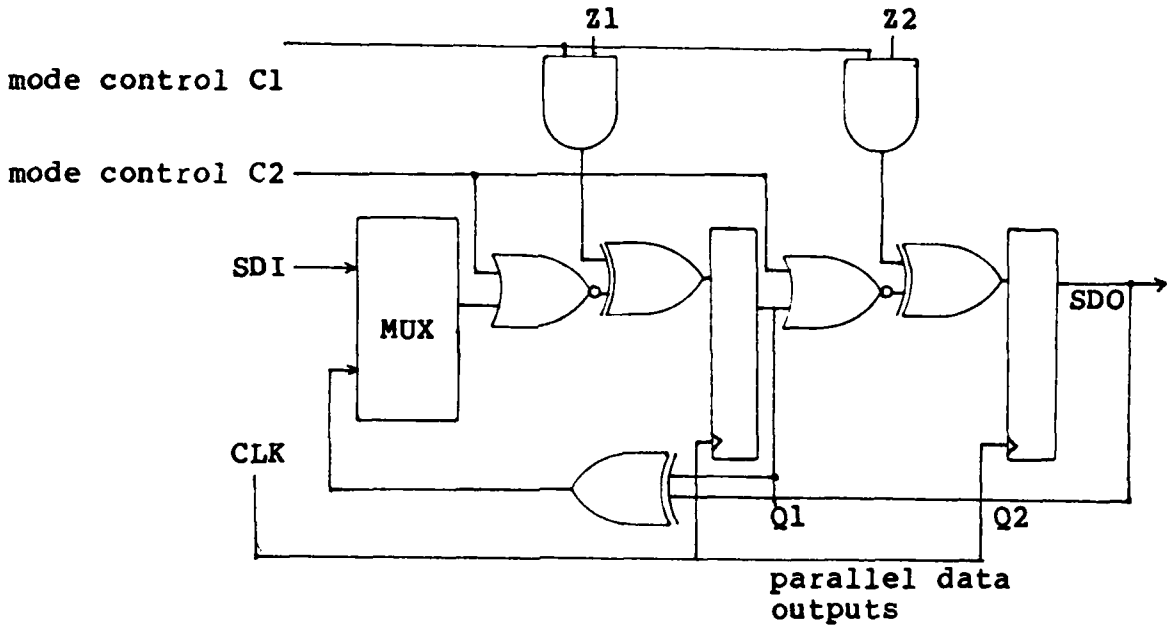

Figure 2.11 Basic BILBO element (2 bits shown) (1:73).

The BILBO element can be configured for four modes of operation. The modes of operation are as follows (1:73-75):

a. Mode 1: C1 = 0, C2 = 1

In this mode each latch is initialized to 0.

b. Mode 2: C1 = 1, C2 = 1

In this mode the BILBO element is configured to act as a normal latch. Each latch can be set or reset independently.

c. Mode 3: C1 = 0, C2 = 0

In this mode the BILBO element is configured to act as a scan-path. This is shown in Figure 2.12

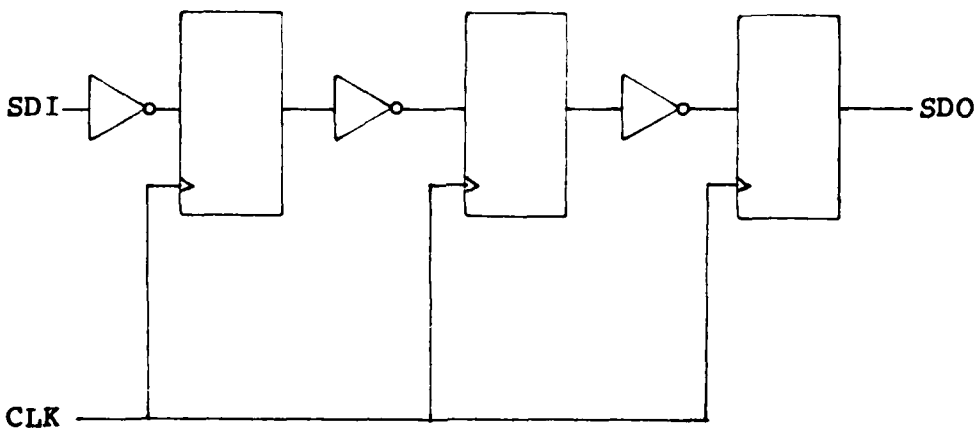

Figure 2.12 BILBO Scan-path mode (1:74).

d. Mode 4: C1 = 1, C2 = 0

In this mode the BILBO element is configured to act as a pseudo-random signal generator, or a CRC signature generator. This configuration is seen in Figure 2.13.

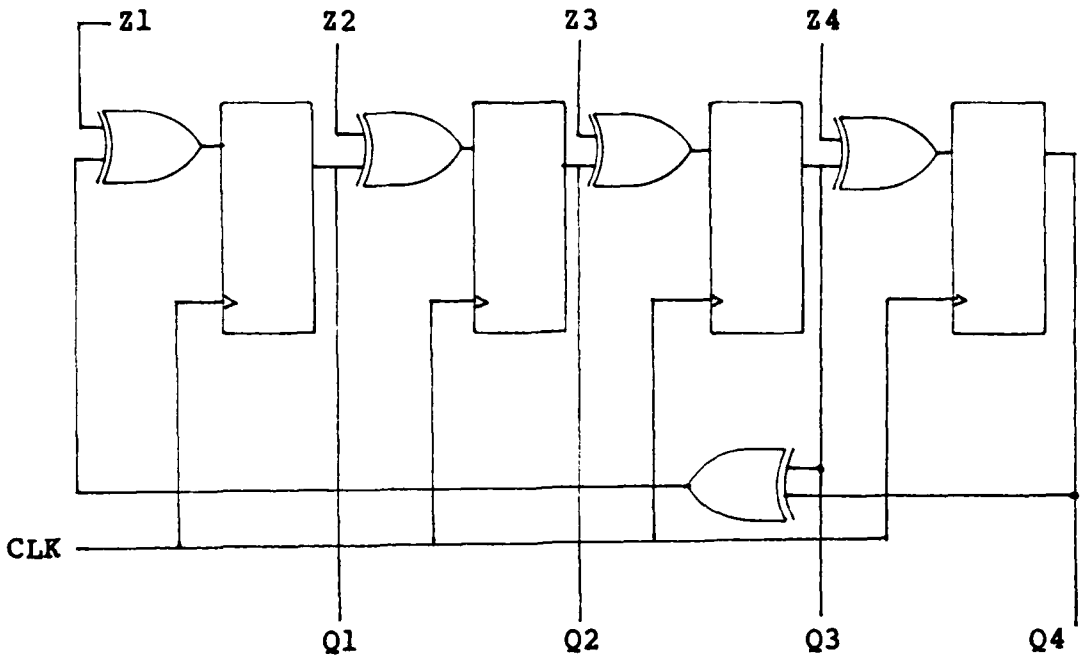

Figure 2.13 BILBO LFSR mode (1:74).

To use it as a pseudo-random signal generator, set Z1 = Z2 = Z3 = 0 and set Z4 = 1.

It can be used as a CRC signature generator in two modes: serial and parallel. For serial input, enter the data in Z1 with Z2 = Z3 = Z4 = 0. For parallel input, all the Z inputs are used (1:75).

From this discussion of BILBO it can be seen that almost every stored-state device and almost all testing circuitry

can be implemented using a BILBO element. With the help of BILBO, the advantages of a high speed built-in test and the high fault resolution of scan-path techniques, VLSI testing can be made much more simple, efficient, and accurate (9:41).

3. STATEMENT OF REQUIREMENTS AND JUSTIFICATION

The purpose of this chapter is to indicate the requirements for the VLSI integrated circuit to be designed in the subsequent chapters. Before enumerating the specific requirements, the general purpose of the circuit will be discussed.

The purpose of this thesis is to demonstrate the value of design for testability. A chip will be designed to incorporate many of the concepts of design for testability, yet the primary function of the circuit will be fairly simple. The purpose of this is to show the self-test capability without becoming engrossed in the complexity of a complex circuit function.

The remaining portions of this chapter will describe and justify the functional, performance, and implementation requirements for the chip to be designed.

Functional Requirements

The following are the functional requirements along with their justification:

a. The basic function of the circuit will be to latch the outputs of combinational logic into stored-state devices, and to provide the outputs of these devices to output pads. The manner in which the information will be manipulated is shown in Table 3-1. The basic function of the circuit is to control the traffic lights at the intersection of two roads. The inputs to the combinational logic will be input through input pads.

Present State	Inputs*	Next State	Outputs HL	FL	ST
Highway Green	C & TL = 0	Highway Green	G	R	NO
	C & TL = 1	Highway Yellow	G	R	YES
Highway Yellow	TS = 0	Highway Yellow	Y	R	NO
	TS = 1	Farmroad Green	Y	R	YES
Farmroad Green	C or TL = 0	Farmroad Green	R	G	NO
	C or TL = 1	Farmroad Yellow	R	G	YES
Farmroad Yellow	TS = 0	Farmroad Yellow	R	Y	NO
	TS = 1	Highway Green	R	Y	YES

Where: C = cars present at light on farmroad
TL = long timeout
TS = short timeout
HL = highway light condition
FL = farmroad light condition
ST = start timer signal
*Note: Inputs not listed indicate don't care conditions.

Table 3-1 Transition table for light controller.

b. The circuit will include stored-state devices as well as combinational circuitry. The purpose of this is to show how scan-path design will simplify the testing of circuits which use stored-state devices.

c. The circuit will include a linear feedback shift register to be used to produce a signature of the scan data output. The purpose of this is to have a means of observing the output of the scan-path, compressing the data, and comparing it to a known correct signature.

d. The test stimuli will be provided by an on-chip test stimuli generator. The purpose of this is to create a chip with self-test capability.

e. The output signature will be compared against a predetermined "correct" signature on-chip. This will enable a go/no go decision to be made on the chip. Therefore, one of the test outputs will be a go/no go signal. The other test outputs will consist of signals at pre-selected probe points of the operational and testing circuitry. These probe points would not ordinarily be available to the user, but will be examined for the purposes of this thesis.

f. Since the objective of this design is to illustrate the concepts of design for testability, and not test generation, the combinational circuitry will not be

complex. Therefore, in lieu of pure combinational logic, a programmable logic array (PLA) will be used.

g. The outputs of the PLA will be included in the scan-path. The purpose of this is to further expand the comprehensiveness of the test.

h. A two-phase, non-overlapping clocking scheme will be used.

Performance Requirements

The following are the performance requirements along with their justification:

a. The linear feedback shift register will be at least six bits long thereby making the probability of a corrupt bit stream producing a correct signature only 1 in 128.

b. Since level-sensitive scan design does not depend on rise and fall times of clock transitions, no performance requirements are needed pertaining to the timing of the changing circuit signals.

c. The testing scheme for the combinational circuitry does not necessarily have to provide 100% fault coverage. Instead of a deterministic testing approach, a

pseudo-random approach may be used. Again, this is due to the fact that the purpose of this design is to produce a testable circuit, not to develop a set of test vectors using and algorithmic approach.

d. The controllability and observability values for each node of the scan path should be the same as the values for the primary inputs and outputs respectively. Ideally, this value will be 1.

e. The PLA shall be of sufficient complexity as to include at least six inputs and five outputs.

f. The chip to be designed will be either a 40, 64, or 128 pin package. This will depend on the number of test outputs which are used.

Implementation Requirements

The following are the implementation requirements and their justification:

a. NMOS technology will be used.

b. The following CAD tools will be used:

cll

cifplot

Mextra

Plagen

Mkpla

Esim

clldrc

RNL

c. All CAD work will be accomplished on a Digital VAX 11/780 running the UNIX operating system. These are the resources available at AFIT.

d. The chip to be designed will be scaled to 2.5 micrometers/lambda. This is the current fabrication technology.

4. SYSTEM DESIGN

This chapter contains the preliminary design of the project circuit along with rational as to the basis of the design. Also included is a test plan and scenario, and an operational plan and scenario.

Project Statement

The purpose of this project is to produce a VLSI circuit which exhibits the property of being testable. Testability of the circuit will be measured according to the criteria described in earlier chapters. More specifically, the circuit will contain all the features described in Chapter 3.

The function of the circuit is very simple. It merely accepts an input, manipulates the input data in a predefined manner (as shown in Table 3-1) through a PLA, and stores the result. The result can then be observed on data output nodes. The simplicity of this circuit, as stated earlier, is to demonstrate the testable characteristics more easily.

Preliminary Circuit Design

The preliminary circuit design is shown in Figure 4.1. This block diagram shows the circuit design at the register transfer language level.

Each of the major circuit elements will now be discussed:

a. Test stimuli generator - this circuit element will be implemented as a counter. This is to ensure that all possible input combinations will be realized, and thus provide an acceptable test set.

b. Combinational logic - this circuit implements the logic transition design in Table 3-1 and will be designed as a PLA. This is the only internal circuit element which is needed to perform the primary circuit function. Everything else is testing circuitry. The PLA outputs will be designed with LSSD characteristics making the circuits overall testability even greater.

c. Stored-state devices - these circuit elements will be implemented using LSSD shift-register latches.

d. Reference register - a simple serial-in, parallel-out register will be used.

e. Linear feedback shift register (LFSR) - a cyclic redundancy check circuit element will be implemented

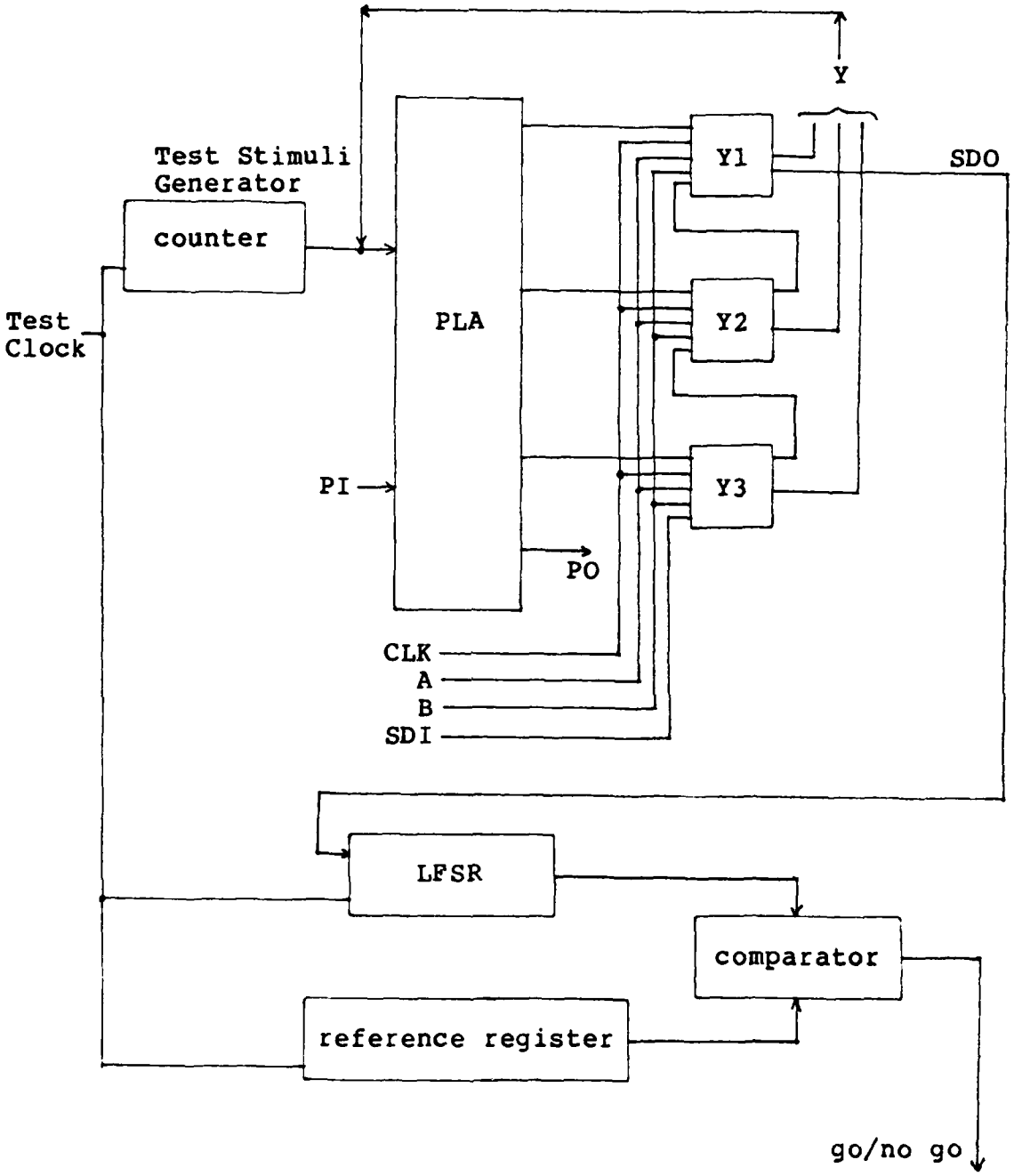

Figure 4.1 Preliminary circuit design (block diagram).

using a serial-in, serial/parallel-out shift register combined with some gate logic.

f. Comparator - this circuit element will be implemented by creating a comparator circuit from simple gates. (Note: A PLA could be substituted to perform the functions of the reference register and the comparator. This method however, may not always be feasible due to the increased layout area required by a PLA.)

g. Clock - a two-phase, non-overlapping clock will be implemented to perform all system clocking needs. A standard clock pad generator will be used.

h. Inputs - standard input pads will be used.

i. Outputs - standard output pads will be used.

A more detailed description of the circuit elements will be presented in Chapter 5. There, each circuit element will be described down to the VLSI library primitive cells which comprise it.

Test Plan and Scenario

The strategy for exercising the circuits testing elements will be as follows:

a. Select the normal mode of operation (not the scan-path mode).

b. Using the test stimuli generator apply inputs to the PLA.

c. Latch the outputs of the PLA (next-state outputs) into the stored-state devices (registers).

d. Select the scan-path mode of operation.

e. Clock the stored-state device contents into the linear feedback shift register.

f. Return to step (a) a specified number of times.

g. When steps (a) - (f) have been completed, compare the contents of the linear feedback shift register to the reference register (this will be done automatically, therefore, the tester must only check the go/no go signal).

h. At specified times during testing, all probe test outputs should be examined for correctness. This is another way of identifying faults other than with the go/no go signal. In addition, this will help determine the location of a fault if one exists.

The test stimuli will be pseudo-random as opposed to deterministic. Due to the simplicity of the circuit, this type of test stimuli will be sufficient and should meet the nodal excitation requirement described in Chapter 2.

A more in depth discussion of testing will be presented in Chapter 5, which will contain the test procedure.

Operational Scenario

When the circuit is not in the scan-path mode, it is in the operational mode. The scenario for the operational mode is very simple and is as follows:

a. Place the circuit in the operational mode.

b. Apply inputs to the circuit.

c. Observe circuit outputs (primary outputs only).

d. Establish any inconsistencies between the circuit inputs and expected outputs. This is known as functional testing.

Because of the circuits simplicity, this scenario should be relatively easy to accomplish and verify.

5. DETAILED DESIGN

This chapter contains the individual design of the subsystems which were described in Chapter 4. Each subsystem is designed to the lowest form for which a library cell exists. Also, a block diagram showing the relative location of each subsystem is presented.

In addition, a test procedure is presented in this chapter. This procedure contains a detailed description of the test needed to exercise the completed circuit.

Major Subsystems

This section contains the major subsystem descriptions and specifications.

1. Test Stimuli Generator - 2 stage counter

   Library cell: Cnt
   Size per cell: 24 x 115 lambda
   Cells needed: 2
   Current per cell: 0.3 mA
   Total dimensions: 65 x 140 lambda
   Total area needed: 15,100 square lambda

   Cell (non-library): reset transistors
   Size per cell: 10 x 10 lambda
   Cells needed: 2

Total dimensions: 40 x 10 lambda
Total area needed: 400 square lambda

Test stimuli generator block diagram is shown in Figure 5.1.

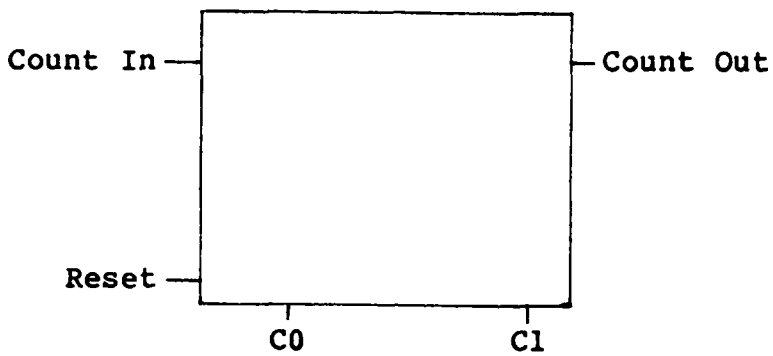

Figure 5.1 Test Stimuli Generator (block diagram).

The actual circuit layout can be seen in Appendix A.

---

2. Y1-Y0

Library cell: StScanClkIn
Size per cell: 19 x 111 lambda
Cells needed: 2
Current per cell: 0.2 mA
Total dimensions: 130 x 111 lambda
Total area needed: 14430 square lambda

---

3. Linear Feedback Shift Register

Library cell: StScanClkIn

Size per cell: 19 x 111 lambda
Cells needed: 8
Current per cell: 0.2 mA
Total dimensions: 152 x 111 lambda
Total area needed: 16,872 square lambda

Cell (non-library): Exclusive-OR gate
Size per cell: 157 x 95 lambda
Cells needed: 3

A block diagram of the linear feedback shift register is shown in Figure 5.2.

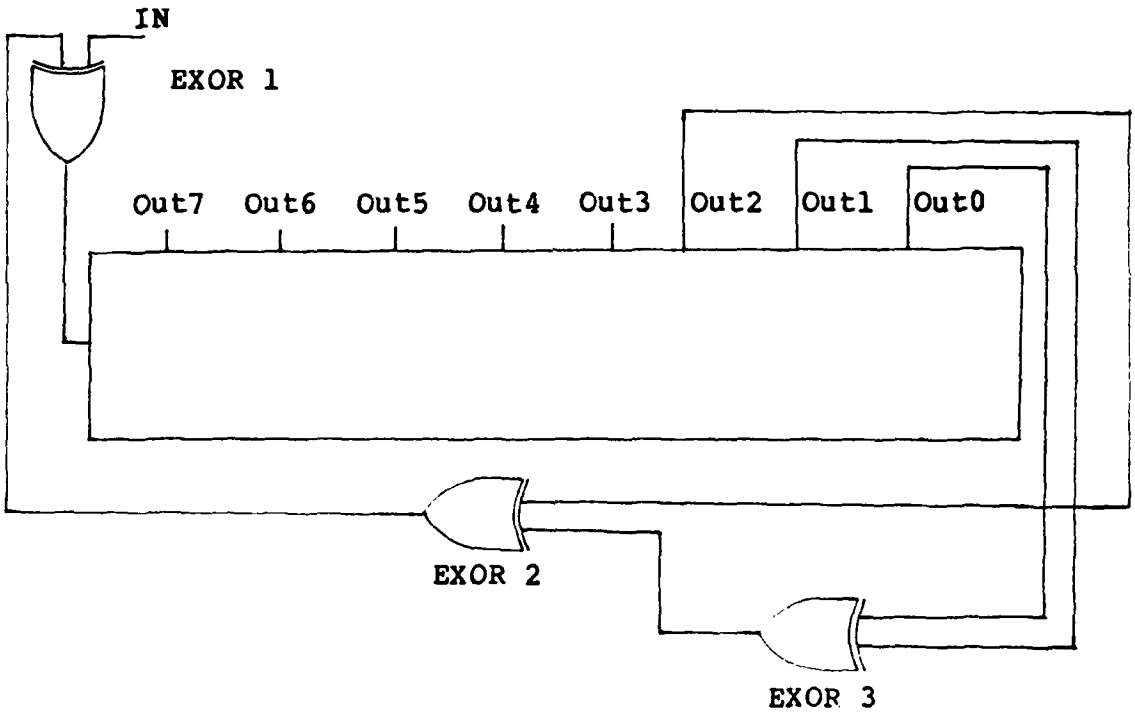

Figure 5.2 Linear Feedback Register (block diagram).

The actual circuit layout of the exclusive or gate and the linear feedback shift register can be seen in Appendix A.

---

4. Reference Register and Comparator

The register and comparator function is implemented as a PLA. The PLA inputs will include the test stimuli values, the primary outputs of the traffic controller logic, and the circuit signature. If the signature is correct at specified clock periods, the go/no go signal will stay high. Otherwise, the go/no go signal; will be low indicating a fault. A more detailed description of the testing circuitry is presented in the test procedure and in Appendix D.

---

5. PLA for Traffic Controller Function

As stated previously, this PLA will represent any type of combinational or sequential logic which performs the traffic controller function. The equations for this PLA are found in Appendix D.

---

6. Clock

Library cell: NClk
Size per cell: 100 x 179 lambda
Cells needed: 1
Current per cell: 1.2 mA

---

7. Input Pads

Library cell: NIn8
Size per cell: 100 x 132 lambda
Cells needed: 9
Current per cell: 0.3 mA

---

8. Output Pads

Library cell: NOut8
Size per cell: 100 x 145 lambda
Cells needed: 6
Current per cell: 1.6 mA

---

9. Vdd Pad

Library cell: NVdd
Size per cell: 80 x 100 lambda
Cells needed: 1
Current per cell: 20 mA

---

10. Gnd Pad

Library cell: NGnd
Size per cell: 100 x 106 lambda
Cells needed: 1
Current per cell: 40 mA

---

11. Substrate Pad

Library cell: NBlank

Size per cell: 100 x 106 lambda
Cells needed: 1
Current per cell: mA

The final chip block diagram is shown in Figure 5.3

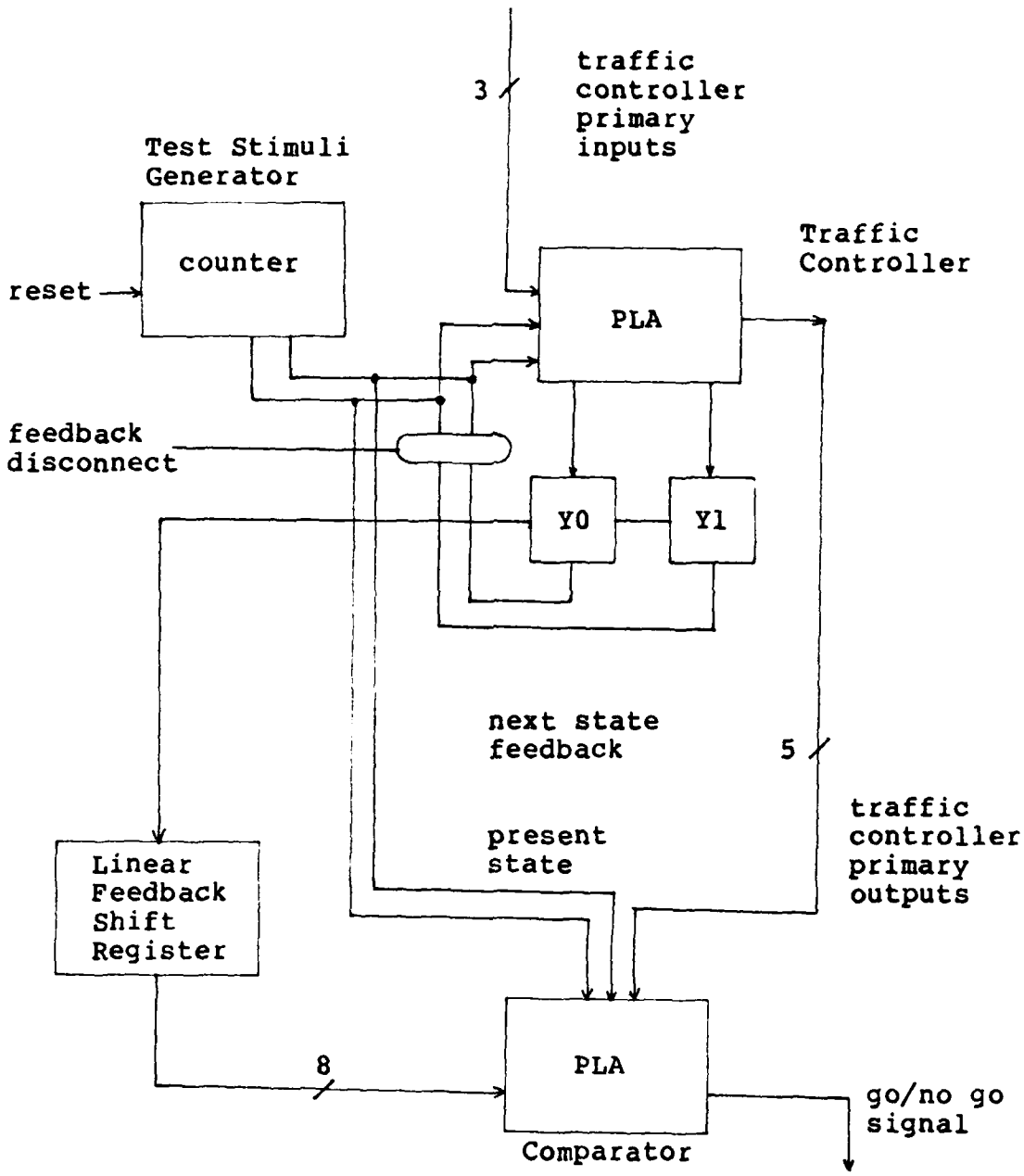

Figure 5.3 Final block diagram for complete chip design.

The actual chip layout can be seen in Appendix B.

Test Procedure and Scenario

In order to test the traffic controller function, it is necessary to perform the sequence of steps indicated in this test procedure.

The steps are as follows:

a. Break the traffic controller PLA feedback path using the feedback disconnect signal. By eliminating the feedback, the circuit state can be controlled using external stimuli.

b. Reset the test stimuli generator using the counter reset signal.

c. Increment the test stimuli generator, thereby applying inputs to the traffic controller circuitry.

d. At the same time as step (c), apply valid primary inputs to the traffic controller circuitry. The L0 and L1 registers will be updated with output data automatically.

e. Select the scan path mode of operation using the psi1 and psi2 signals. These signals will clock information from L0 and L1 to the linear feedback shift

register.

f. Clock the contents of L1 and L2 to the linear feedback shift register.

g. The linear feedback shift register signature is automatically extracted at this point and input into the comparator PLA along with the primary outputs from the traffic controller PLA and the test stimuli generator outputs. The correct combination of these inputs will yield a high on the go/no go signal indicating that the circuit is functioning properly.

h. Return to step (c) a specified number of times as shown below.

This procedure must be repeated a predetermined number of times and with a set of predetermined inputs and test stimuli. This is because the test results are pre-programmed into the comparator PLA. The correct order and values of the test inputs are shown in Table 5.1 along with the corresponding test output values for a correctly functioning circuit.

Test Inputs					Outputs							
Test Stimuli		Primary Inputs			Next State		Primary Outputs					LFSR Signature
C1	C0	PI2	PI1	PI0	Y0	Y1	PO4	PO3	PO2	PO1	PO0	
0	1	X	X	0	1	0	0	1	0	0	1	01000000
1	0	X	X	0	0	1	0	0	1	1	0	10010000
1	1	0	X	X	1	0	1	1	0	0	0	01100100
0	1	X	X	1	0	0	1	1	0	0	1	11011001
1	0	X	X	1	1	1	1	0	1	1	0	00110110
1	1	X	1	X	1	0	1	1	0	0	0	01001101
1	1	1	0	X	1	1	0	1	0	0	0	11010011
0	0	1	1	X	0	1	1	0	0	1	0	00110100
0	0	0	X	X	0	0	0	0	0	1	0	11001101
0	0	X	0	X	0	0	0	0	0	1	0	00110011

Table 5.1 Test generation data for self-test.

The data must be input according to Table 5.1 in order for the self-test circuitry to work properly.

6. EVALUATION OF SELF-TEST

This chapter evaluates the self-test testability concept versus traditional methods of circuit testing. Although no empirical comparisons are made, clear conclusions can be drawn relative to viability of each method considering the application in mind.

There are three categories which are evaluated. They are:

a. The effort needed to design the circuit.

b. The layout area used to place the design on a VLSI chip.

c. The effort involved in testing the completed circuit.

Each of these categories are discussed as well as indications as to which design method would be preferred in light of the results from the design in Chapter 5.

Design Effort

The design of the traffic controller in Chapter 5 is quite simple. A programmable logic array comprises the

entire circuit. However, the testing circuitry is much more extensive. At first glance, this may seem to be a great hindrance to the self-test concept. However some important facts must be considered.

First, although the self-test circuitry was much harder to design than the circuit implementing the traffic controller function, most of the self-testing circuitry consists of standard devices which can be used interchangeably between VLSI chips. For example, the linear feedback shift register is a basic design technique which can be used in any self-test circuit. Therefore, it is only designed once and then transferred to any circuit in which the need for one arises. The same can be said about the test stimuli generator. As long as a pseudo-random test input is acceptable, the counter used in Chapter 5 can be used again for another circuit. If deterministic test inputs are needed, much more time and effort would have to be allocated for the design and test phase. This must be taken into account.

Second, in Chapters 3 and 4, much effort was made to emphasize the fact that the traffic controller was being implemented as a PLA in order to reduce the design effort for the circuit. However, no matter whether the circuit was designed as a gate array or whether it was designed at the

SSI level, the test circuitry would not have changed (assuming propagation delay was not a problem).

As long as the inputs and outputs of the circuit to be tested are constant, the test circuitry will not change. In terms of a practical design effort, this fact has important implications. It means as long as the primary circuit inputs and outputs are agreed upon early in the design phase, the design of the primary circuit and the design of the test circuitry can be accomplished in parallel. This could mean months of effort saved, especially for a complex design. In the world of defense contracts, months of effort could save the government millions of dollars in R&D costs alone.

The major design effort for the test circuitry in Chapter 5 was the comparator function. Although the comparator circuit is quite simple (a PLA) the effort involved in preparing the PLA equations was extensive. Also, it must be pointed out that the more encompassing the test vectors are to be, the more effort will be needed to design the comparator circuit. However, while this may seem time consuming, the LSSD design principle makes this work very straightforward.

The design effort for each of the circuit elements is shown in the following table.

Circuit Element	Test Element or Functional Element	Design Effort (hours)
counter	Test	7
Traffic Control PLA	Functional	15
Scan Registers	Test	5
LFSR	Test	40
Comparator PLA	Test	20
		Total = 87

Table 6.1 Effort to design circuit elements in Chapter 5.

From the table above it can be seen that a large amount of time was spent on designing the self-test capability into the circuit. However this extra time spent in the design phase will allow the test engineer to save time during the test phase. Again, some of the circuit elements are basic to all self-test designs and would not have to be designed again in order to incorporate them into another circuit.

A caveat which must be mentioned here is that all evaluations made in this chapter are geared toward the level of self-test capability used in Chapter 5. It must be realized that there are many levels of self-test capability which can be implemented. The method in Chapter 5 is self-test in the sense that all test input vectors and

comparator functions are included on-chip. The testing circuitry does however require external signals such as feedback disconnect and clocking signals to function properly. The level of self-test capability could range from none at all to no external signals required except power-on. Naturally, the fewer external signals required, the more complex the self-test circuitry will be. This must be taken into account during the entire discussion of self-testing evaluation.

Chip Layout Area

This section discusses the problem of the chip area used by the self-testing circuitry. The more self-test capability a circuit has, the more area the testing circuitry will use.

Consider the circuit layout of the traffic controller in Appendix B. The testing circuitry covers approximately 88% of the chip area used by the entire circuit. The following table shows the chip layout area used by the individual circuit elements.

Circuit Element	Test Element or Functional Element	Area Used (square lambda)
counter	Test	7,000
Traffic Control PLA	Functional	24,300
Scan Registers	Test	14,300
LFSR	Test	121,900
Comparator PLA	Test	40,500
	Total =	208,000

Table 6.2 Chip layout area used in Chapter 5 design.

From the table above it can be seen that 183,700 square lambda or 88% of the area used was dedicated to the self-test capability. Although this figure is rather high for typical implementations of self-test capability, it is obvious that circuit layout area will be one of the prices a designer will have to pay when implementing this concept.

In the specific case of the traffic controller circuit, it is obvious that the use of chip area was not a problem. Even with the self-test circuitry on the chip, the chip area is not strained for space. However, for a circuit more complex than the traffic controller, or for a circuit with a more sophisticated implementation of self-test capability, space could become a problem. It is then that the designer must make some decisions as to the relative gains in terms

of ease of testing versus problems in chip size or design effort. This topic is discussed later in this chapter.

Finally, as the device density of VLSI chips grows and there is a greater tendency to increase the capability of a circuit on a single chip, then the more difficult it will become to include self-test circuitry. Although space limitations are not too critical at the moment, it may be this characteristic of VLSI design that may keep self-test from becoming widely accepted.

Test Effort

This section discusses the test effort involved in testing a circuit designed for self-test versus a circuit with no self-test capability.

As can be seen in the test procedure in Chapter 5, it is an easy matter to test the traffic control circuit. No external comparisons of outputs have to be made. They are all done automatically. The only output needed to check the circuit is a go/no go signal. Furthermore, if the self-test capability were more extensive, possibly nothing would have to be done to the chip to test it except to apply power to it. Self-test capability could be expanded so as power is

applied to the circuit, a self-test firmware routine could be run. Additionally, if deterministic test input vectors were needed, they could also be provided using a firmware routine of some kind (possibly ROM-centered design).

It is obvious that a circuit with self-test capability is much easier to test than a circuit without such capability. However, the test engineer may have to do another type of testing. It is possible that not only does the chip have to be functionally tested, but also have any faults located. If this is the case, self-testing circuitry will not be the answer. Self-testing only indicates if the circuit is working properly or not. If it is not, no indication is made as to the location of the fault. This is a serious drawback for self-testing techniques especially when the circuit under test is one in which the test engineer wishes to troubleshoot. This and other problems will be discussed in the next section.

When To Use Self-Test

This section discusses the conditions and circumstances when it is advisable to use self-test techniques. Decisions are made in light of the pros and cons of using self-test circuitry discussed in the previous sections.

When the decision is made to add self-testing circuitry to a primary function circuit, the design effort increases dramatically. Also, as discussed earlier, the layout area of the chip could be as much as 88% higher. Finally, the test results will not give any indication of fault location. These factors must be considered early in the design phase. They must be considered in relation to the application of the primary circuit to determine if the drawbacks of self-test are worth the gains.

Several conditions must be considered when making the decision as whether to use self-test or not. They are:

a. What will be the environment for the operation of the circuit?

b. Will the circuit layout be strained for space?

c. Is controllability and observability important?

Each of these conditions will impact the decision.

The environment for the operation of a circuit is the single most important consideration when deciding to use self-test or not.

A critical circuit (e.g. an F-16 fire control circuit) which must be replaced rapidly (e.g. in a wartime environment) must check out as working properly at a moments notice. Manually performing diagnostic checks on a circuit may result in a weapons system being destroyed before it

could launch. Self-testing circuits eliminate this delay. Therefore, for circuits of this type, self-test capability would be warranted.

Another example of environmental dependency would be a circuit which is to be used on board a satellite. Obviously, a technician could not manually test a circuit once it was in orbit. It is more practical for the satellite to implement a self-test when ordered and transmit a go/no go signal to satellite ground controllers. Self-test is almost imperative in this case.

However, self-test circuitry is not as vital for a circuit which can be tested without time constraints or special conditions. An example of this type of circuit may be a disk controller.

Circuit layout area must also be considered. With the device densities currently available, entire computers can be placed on one or two semiconductor chips. Self-test circuitry for these chips may be impractical because of the increased layout area needed. The designer may defeat the whole purpose of one chip computer design by adding the additional testing area. Again, the decision to use self-test must be a judgement based on the practicality of employing it in a given situation.

Another option that the designer has is to incorporate into a design, a lower level of self-test circuitry.

Perhaps only enough circuitry can be added to enable the test engineer to test the circuit manually, but more easily than normal (e.g. adding pinnouts which are probe points to the nodes of a circuit which are less observable than other nodes). The area overhead for this approach would be minimal.

If controllability and observability are important to the test engineer, then self-testing will not be satisfactory. Controllability and observability imply that a rigorous testing method will be employed (e.g. the d-Algorithm). It also implies that an attempt will be made to determine the exact location of a fault and perhaps repair it. These concepts, while useful under certain circumstances, do not help a technician trying to determine if a circuit is functioning in the field. Therefore, the time to worry about controllability and observability is in the design of the primary function circuit, not when the circuit is ready for layout on a chip.

7. CONCLUSION

The testability of VLSI circuits is an important consideration during the design phase of a project. As the device density on VLSI circuits increases, the ability to test the circuit decreases. Furthermore the effort involved in testing a circuit once it reaches the field could, and often does, outweigh the effort involved in the design of the circuit. As the effort in a project increases, so does the cost. Therefore, the motivation exists to lessen the impact of testing on both the schedule and cost of a project.

Several techniques are available to the designer to measure testability as well as increase testability. Some of these methods are highly accepted in industry today such as level sensitive scan design. By adhering to design methods such as this, the testability of a circuit can be increased with comparably little extra effort on the design phase. So successful are some of these techniques that some companies require their design engineers to incorporate them.

Other techniques are available whereby dedicated testing circuitry is added to an otherwise completed design. An

example of this is signature analysis. By using this technique, a circuits unique response to test stimuli can be produced on-chip. This enables the tester to determine if the circuit is working properly by observing the circuits signature at a predetermined circuit node in response to test stimuli. Again, this is an industry wide accepted technique.

By combining level sensitive scan design with signature analysis a greater level of testability can be realized. When using both techniques, not only is the circuit more testable, but much of the probing a tester would ordinarily have to do is done automatically, giving the tester a nodal signature. These signatures are then compared to signatures obtained from a "good circuit". This implementation of these techniques shortens the testing phase considerably. By obtaining signatures at several circuit nodes the location of a possible fault can also be determined. Furthermore, this technique can also be used in synchronous as well as combinational logic. This is due to the ability of level sensitive scan design to initialize the state of a synchronous machine to a predetermined starting state.

Finally, the most desirable testing conditions can be realized by expanding the above technique further. If the test stimuli and the compare function can be placed on the

VLSI chip as well, the circuit will be self-testing. The only test output will be a go/no go signal. The drawback to this method is that the location of a fault cannot be determined. Depending on the circuit application, this may or may not be a priority. The level of sophistication of self-testing capability can be changed. It must be realized however that the more self-test capability a circuit has, the more chip area must be dedicated for this purpose. Each design must take this into account and a decision must be made as to the gains of self-test versus the drawbacks.

Several factors should influence the decision of whether to use self-test circuitry. The most important factor is the environment in which the circuit is to be tested. A difficult testing environment is an indication that self-testing circuitry might alleviate some of the problems of testing. Also, conditions where testing must be accomplished without much time might indicate some self-test scheme as well. Other factors such as circuit space and testability measures (controllability and observability) must also be considered.

As self-test techniques become more standardized and their use more widespread, the effect on VLSI technology will be enormous. If all VLSI chips were to incorporate such designs, the reliability and maintainability of the

AD-A151 834 DESIGNING VLSI (VERY LARGE SCALE INTEGRATED) CIRCUITS FOR TESTABILITY(U) AIR FORCE INST OF TECH WRIGHT-PATTERSON AFB OH SCHOOL OF ENGINEERING M KAPLAN 2/2

UNCLASSIFIED DEC 84 AFIT/GE/ENG/84D-39 F/G 9/5 NL

END

FILMED

DTIC

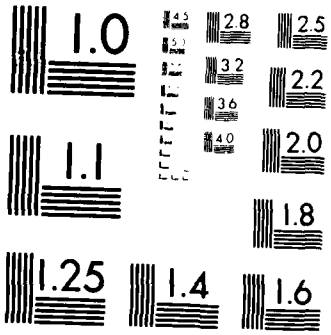

MICROCOPY RESOLUTION TEST CHART
NATIONAL BUREAU OF STANDARDS 1963-A

circuits will be improved. In addition, the reliability and maintainability of the systems they are a part of will also increase.

As an extension of this thesis, further work should be undertaken to implement the self-test capability on another VLSI device. However, unlike this thesis, it should be totally self-testing. This would involve the implementation of a sequential machine strictly to run the self-test feature. In addition, the device should be simulated and fabricated. Also the function selected should be one which has previously been designed without self-test capability. In this way, the two methods of testing can be compared.

APPENDIX A

CIFPLOTS OF MAJOR SUBSYSTEMS

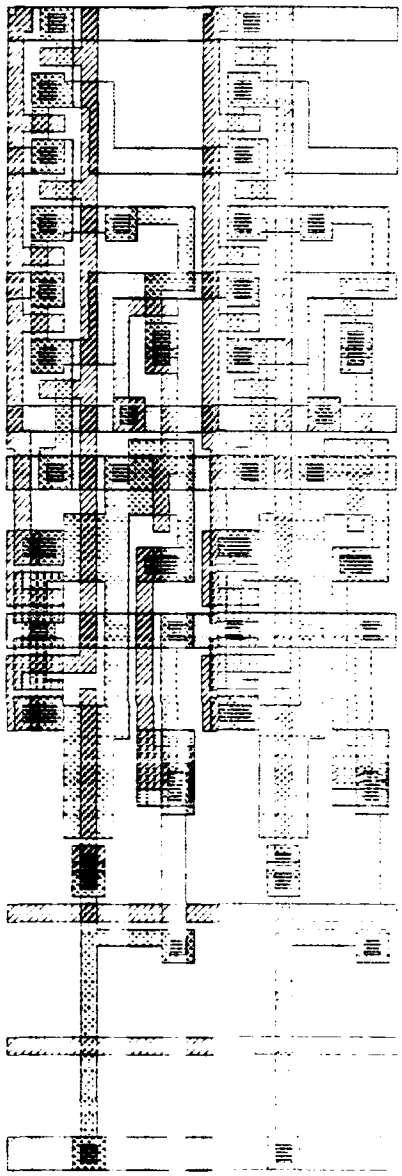

Figure A.1 Test Stimuli Generator (counter).

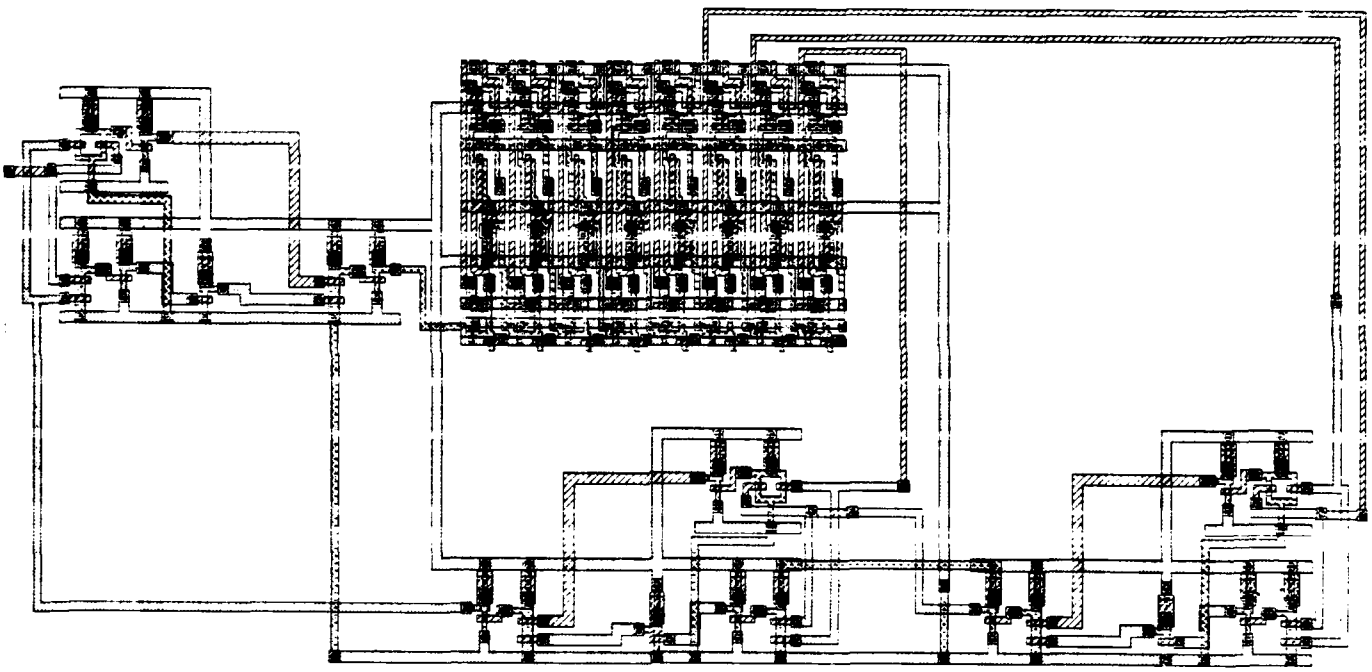

Figure A.2 Linear Feedback Shift Register.

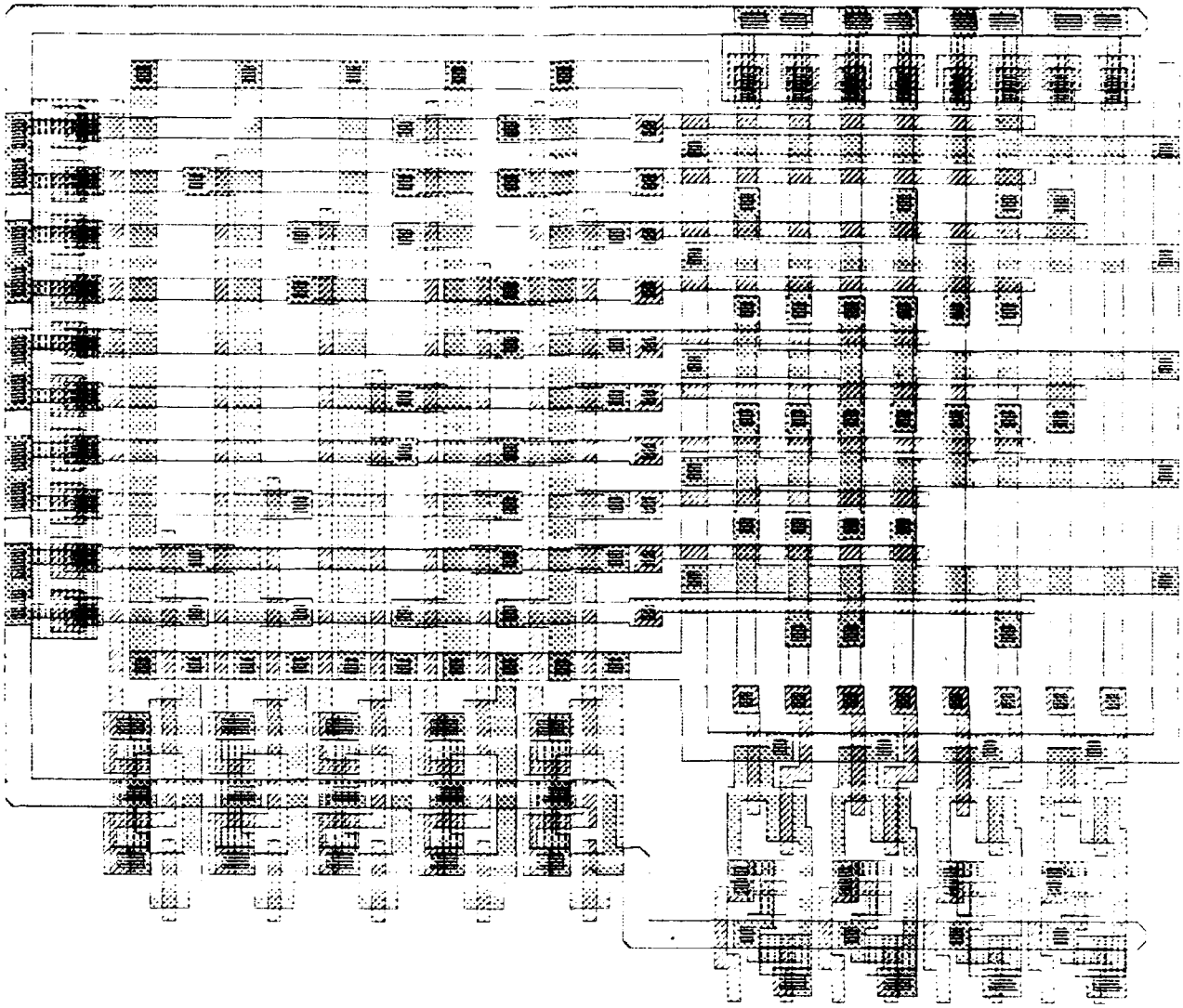

Figure A.3 Traffic Controller PLA.

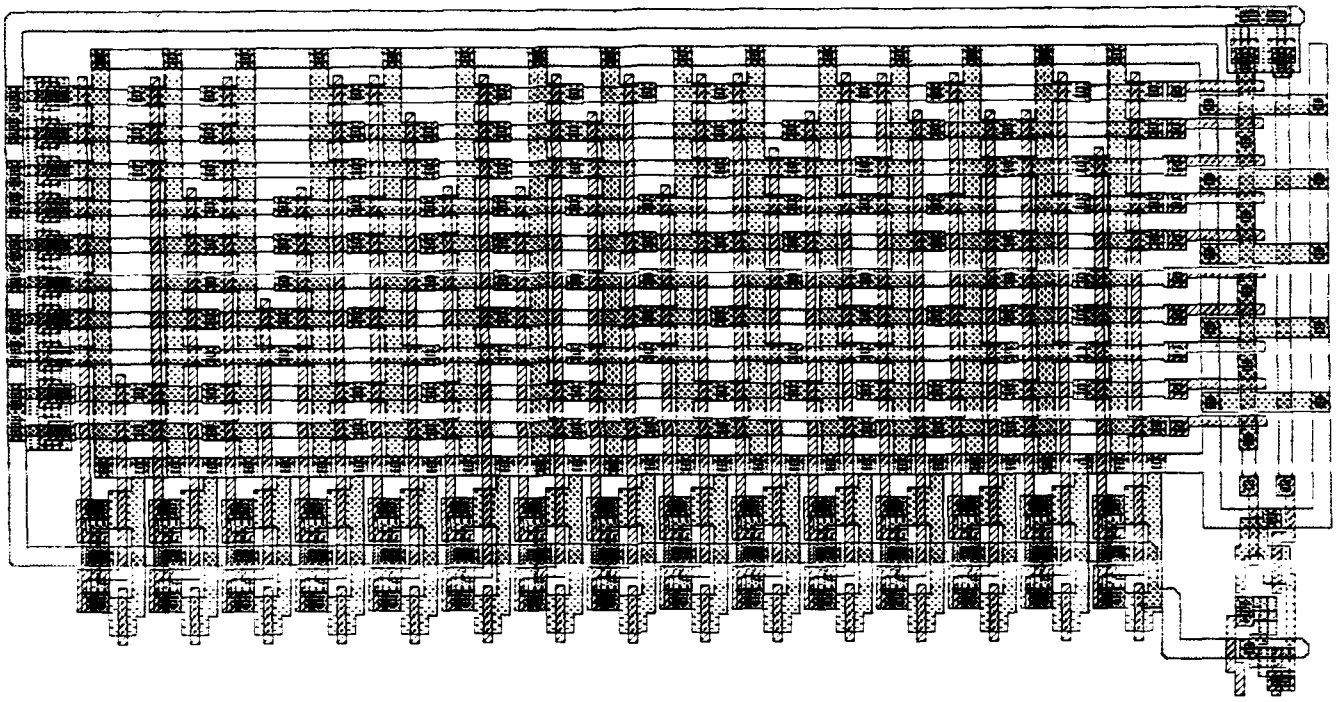

Figure A.4 Comparator PLA.

APPENDIX B

CIFPLOT OF CHIP LAYOUT

FOR CHAPTER 5 DESIGN

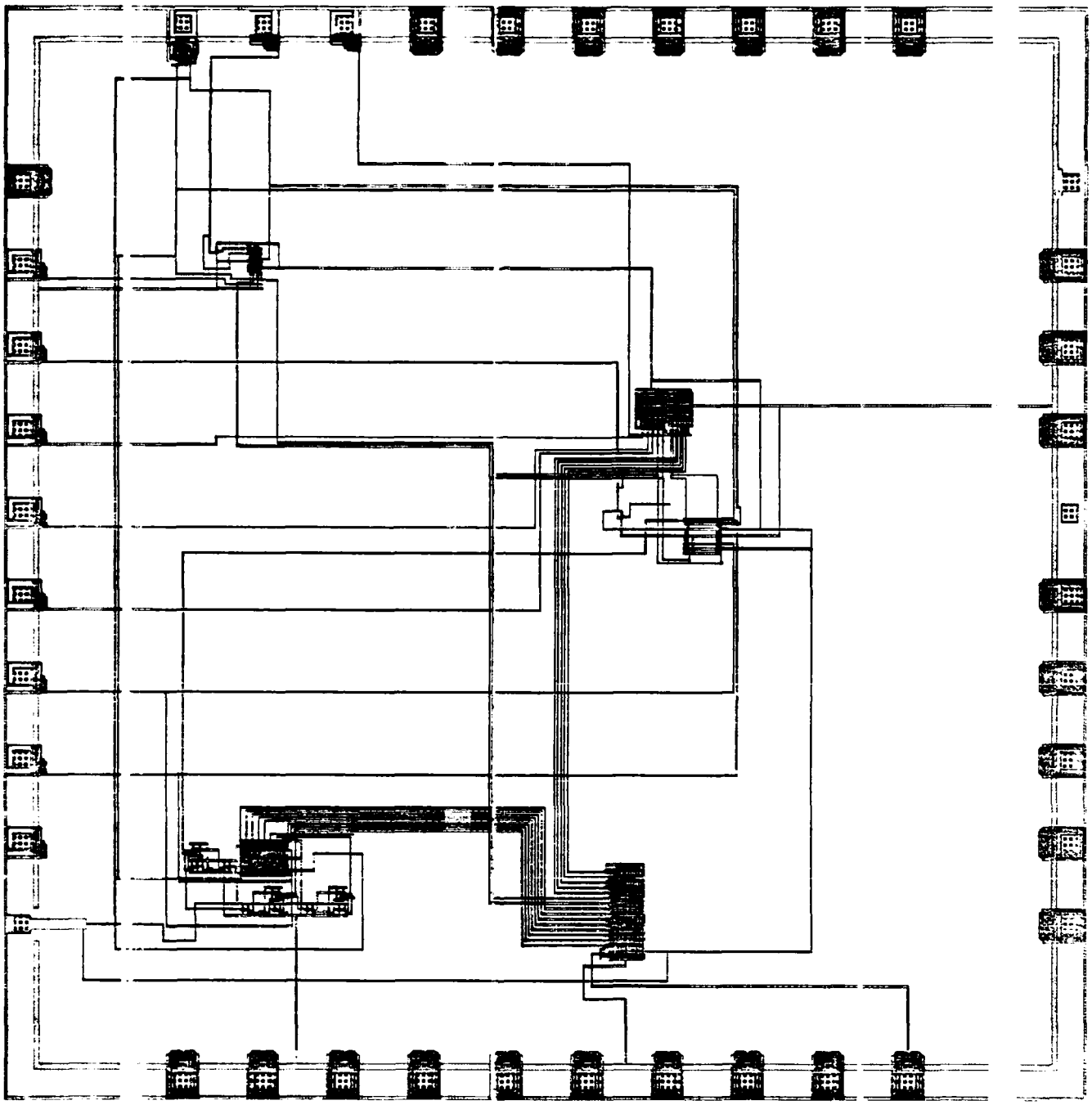

Figure B.1 Traffic controller with test circuitry.

APPENDIX C

CLL FILES FOR CHAPTER 5 DESIGN

AND GATE

```
/* cll with -ls option */

#include "/usr/local/cad/lib/s_ext.cll"

#define xlen 34
#define top 40

andgate
{

        metal;
        Pnand (0,0);
        wire metal 0,2 w 4 r 34;
        wire metal 0,38 w 4 r 34;
        wire metal 25,0 w 4 u 8;

/*      wire poly 18,59 r 6; */
        wire poly 18,17 r 6;
        inverter (22,8);

}


Pnand         /* nand cell */
{
        wire diff 8,4 w 4 u 18;
        wire diff 8,22 u 14;
        wire poly 4,9 r 8;
        wire poly 4,16 r 8;
        rect 5,23 6,12 implant;
        rect 5,25 6,8 poly;
        butt (6,21 rotate 9);
        wire diff 10,20 r 4;
        via 6,36 diff; /* Vdd contact */
        butt (14,18);  /* output contact */
         via 0,7 poly;
        via 0,14 poly;  /* input contacts */
        via 6,0 diff; /* ground contact */

}

inverter
{
        metal;
```

```
        wire diff 7,4 u 24;
        wire poly 4,9 r 6;
        rect 4,15 6,12 implant;
        rect 4,17 6,8 poly;
        butt (5,14 rotate 9);
        wire diff 5,13 r 8;
        via 5,28 diff; /* Vdd contact */
        via 12,11 diff; /* output contact */
        via 5,0 diff;
}
```

THE CHIP

```
/* This is the cll file for the entire chip */

#include "/usr/local/cad/lib/s_ext.cll"
#include "padlayout.cll"
#include "counter.cll"
#include "lfsr.cll"
#include "inverter2.cll"
#include "wires.cll"
external pla3{cif 2000 bounds 0,400 --400,0)
external comp(cif 3000 bounds 0,470 --240,0)
external StScanCkIn(cif 514 bounds 0,0 19,111)
The_Chip

{

        Pads(0,0);
        LFSR(600,600);
        CNTR(800,2500);
        pla3(2000,2600);
        comp(2500,1000 rotate 3);
        StScanCkIn(2150,1700 rotate 6);
        StScanCkIn(2250,1700 rotate 6);
        invertergate2(1950,1800);
        invertergate2(700,2600);
        Wires(0,0);

}
```

TWO STAGE COUNTER

```
#include "/usr/local/cad/lib/s_ext.cll"

#define          cntr_space_2  24      /* lambda */

CNTR
{
        /* place 2-bit counter */

        Cntr_2(300,250);
        iterate 2,1
                CntReset(300,234);      /*reset transistors*/

        metal;
        wire 300,227 w 4 r 50;          /* GND for reset */
        wire 310,235 diff w 2 d 10;
                /* wires for reset connection */
        wire 334,235 diff w 2 d 10;
        via 308,225 diff;
        via 332,225 diff;

}
/* ..................................................*/

CntReset

{               /* reset transistors on counters */
        wire diff 10,4 d 30;
        wire poly 0,--20 r 24;
}

/* ..................................................*/

Cntr_2
{
            /* two bit count */
        iterate 2, 1  cntr_space_2, default
                Cnt(0, 0);
}

/* ..................................................*/
```

EXCLUSIVE OR GATE

```
/* Exclusive OR gate */

#include "or.cll"
#include "and.cll"
#include "inverter.cll"

exorgate
{
        orgate(0,50);
        andgate(0,0);
        invertergate(50,0);
        andgate(100,0);

/* wires for exor gate */

        wire poly 42,71 w 4 r 50 d 55 r 10;
        wire metal 63,13 w 4 r 10 d 4 r 29;
        wire metal 32,21 w 4 r 10 d 12 r 10;
        wire metal 2,9 w 3 l 15 u 59 r 15;
        wire metal 2,16 w 3 l 5 u 42.5 r 5;
        via --6,56.5 poly;
        wire poly --4,58 w 3 l 17;
        via --22,56 poly;

/* wires for Vdd */

        wire metal 32,38 w 4 r 70;
        wire metal 57,38 w 4 d 10;
        wire metal 57,38 w 4 u 50 l 18;

/* wires for Gnd */

        wire diff 12,54 w 3 d 7 r 30 d 45;
        via 40,0 diff;
        wire metal 32,2 w 4 r 70;

}
invertergate
{
        metal;

        wire diff 7,4 u 24;
        wire poly 4,9 r 6;
        rect 4,15 6,12 implant;
        rect 4,17 6,8 poly;
```

```
        butt (5,14 rotate 9);
        wire diff 5,13 r 8;
        via 5,28 diff; /* Vdd contact */
        via 12,11 diff; /* output contact */
        via 0,7 poly; /* input contact */
        via 5,0 diff;
}
invertergate2
{
        metal;
        wire diff 7,4 u 24;
        wire poly 4,9 r 6;
        rect 4,15 6,12 implant;
        rect 4,17 6,8 poly;
        butt (5,14 rotate 9);
        wire diff 5,13 r 8;
        via 5,28 diff; /* Vdd contact */
        via 12,11 diff; /* output contact */
        via 0,7 poly; /* input contact */
        via 5,0 diff;
}
```

LINEAR FEEDBACK SHIFT REGISTER

```
/* Linear Feedback Shift Register */

#include "/usr/local/cad/lib/ext.cll"
#include "exor.cll"
/*external StScanCkIn(cif 514 bounds 0,0 19,111)*/
LFSR

{
        StScanCkIn(0,0);
        StScanCkIn(19,0);
        StScanCkIn(38,0);
        StScanCkIn(57,0);
        StScanCkIn(76,0);
        StScanCkIn(95,0);
        StScanCkIn(114,0);
        StScanCkIn(133,0);

/* Exclusive OR gates */

        exorgate(--180,10);
        exorgate(200,--120 flip lr);
        exorgate(0,--120 flip lr);

/* wire from XOR1 to input of register */

        wire diff --27,31 w 2 r 12 d 22 r 17;

/* wire from out 7 to XOR3 */

        wire poly 115,111 w 2 u 9 r 229 d 100;
        via 342,18 poly;
        wire metal 344,22 w 3 d 75;

/* wire from out 6 to XOR3 */

        wire poly 96,111 w 2 u 19 r 258 d 192;

/* wire from out 8 to XOR2 */

        wire poly 134,111 w 2 u 4 r 40 d 168;
        via 172,--54 poly;
        wire metal 175,--52 w 3 l 30;
```

```
/* wire from XOR3 to XOR2 */

        wire metal 203,--99 w 3 l 23 u 37 l 27;

/* wire from XOR2 to XOR1 */

        wire metal 3,--99 w 3 l 170 u 119;

/* Vdd wires */

        wire metal --25,48 w 4 r 15 u 45 r 11;
        wire metal --10,52 w 4 d 18 r 11;
        wire metal --10,50 w 4 d 132 r 11;
        wire diff 125,--82 w 3 r 87;

/* Gnd wires */

        wire diff --50,13 w 3 d 132;
        via --52,--120 diff;
        wire metal --50,--118 w 4 r 53;
        wire metal 130,--118 w 4 r 73;
        via 188,--120 diff;
        wire diff 190,--119 w 3 u 30;
        via 188,--92 diff;
        wire metal 190,--90 w 4 u 145 l 40;
        wire metal 190,55 w 4 u 53 l 40;

}
```

NAND GATE

```
nand        /* nand cell */
{
        metal;
        wire diff 8,4 w 4 u 18;
        wire diff 8,22 u 14;
        wire poly 4,9 r 8;
        wire poly 4,16 r 8;
        rect 5,23 6,12 implant;
        rect 5,25 6,8 poly;
        butt (6,21 rotate 9);
        wire diff 10,20 r 4;
        via 6,36 diff; /* Vdd contact */
        via 14,18 diff;  /* output contact */
        via 0,7 poly;
        via 0,14 poly;  /* input contacts */
        via 6,0 diff; /* ground contact */

}
```

NOR GATE

```
norgate     /* nor cell */
{
        metal;
        wire diff 12,4 u 2;
        wire diff 6,7 r 12;
        wire diff 7,8 u 8;
        wire diff 17,8 u 8;
        wire diff 6,17 r 14;
        wire diff 12,18 u 12;
        wire poly 4,12 r 6;
        wire poly 14,12 r 8 d 4;
        rect 9,18 6,11 implant;
        rect 9,20 6,7 poly;
        butt (10,17 rotate 9);
        via 10,30 diff; /* Vdd contact */
        via 20,15 diff; /* output contact */
        via 0,10 poly;
        via 20,4 poly; /* input contacts */
        via 10,0 diff; /* ground contact */
}
```

OR GATE

```
#define xleng 42
#define yleng 40

orgate
{
        nor (0,4);
        inverter2 (26,8);

        wire metal 0,2 w 4 r xleng;
        wire metal 0,38 w 4 r xleng;
        wire metal 0,8.5 r 24;

        wire poly 27,25 d 7;
        wire metal 33,0 w 4 u 8;
        via 10,0 diff;                    /*GND*/

}

nor     /* nor cell */
{
        metal;
        wire diff 12,4 u 2;
        wire diff 6,7 r 12;
        wire diff 7,8 u 8;
        wire diff 17,8 u 8;
        wire diff 6,17 r 14;
        wire diff 12,18 u 12;
        wire poly 4,12 r 6;
        wire poly 14,12 r 8 d 4;
        rect 9,18 6,11 implant;
        rect 9,20 6,7 poly;
        butt (10,17 rotate 9);
        via 10,30 diff; /* Vdd contact */
         butt(20,15); /* output contact */
        via 0,10 poly;
        via 20,4 poly; /* input contacts */
        wire diff 12,4 d 6;
}
inverter2
{
        metal;
        wire diff 7,4 u 24;
        wire poly 4,9 r 6;
        rect 4,15 6,12 implant;
        rect 4,17 6,8 poly;
```

```
        butt (5,14 rotate 9);
        wire diff 5,13 r 8;
        via 5,28 diff; /* Vdd contact */
        butt(12,11); /* output contact */
        wire poly 0,9 r 4;
        via 5,0 diff;
}
```

PADLAYOUT

```
/* FOR LAMBDA = 2.0 Microns  */
#include "/usr/local/cad/lib/s_ext.cll"

Pads
     {
     /*  Vias inserted for ref points */

     via 0,0 poly;
     via 3446,3396 poly;

     /*  wiring for Vdd and Gnd */
     metal;

     /* Vdd Loop on the Outside */

     wire 51,3349 w 8 y 47;
     wire 51,51   w 8 x 3403;
     wire 3399,51 w 8 y 3353;
     wire 3399,3349 w 8 x 47;

     /* Gnd Loop on the Inside */

     wire 145,3255 w 16 y 625;
     wire 145,525  w 16 y 137;
     wire 145,145 w 16 x 3313;
     wire 3305,145 w 16 y 3263;
     wire 3305,3255 w 16 x 137;

     /* lower edge pads */

     NOut8(550,47);
     NOut8(800,47);
     NOut8(1050,47);
     NOut8(1300,47);
     NOut8(1550,47);
     NOut8(1800,47);
     NOut8(2050,47);
     NOut8(2300,47);
     NOut8(2550,47);
     NOut8(2800,47);

     /* right edge pads */

     NOut8(3258,525 rotate 9);
     NOut8(3258,775 rotate 9);
```

```
NOut8(3258,1025 rotate 9);
NOut8(3258,1275 rotate 9);
NOut8(3258,1525 rotate 9);
NBlank(3297,1775 rotate 9);
NOut8(3258,2025 rotate 9);
NOut8(3258,2275 rotate 9);
NOut8(3258,2525 rotate 9);
NGnd(3299,2775 rotate 9);

/* top edge pads */

NClk(550,3174 flip ud);
NIn8(800,3221 flip ud);
NIn8(1050,3221 flip ud);
NOut8(1300,3208 flip ud);
NOut8(1550,3208 flip ud);
NOut8(1800,3208 flip ud);
NOut8(2050,3208 flip ud);
NOut8(2300,3208 flip ud);
NOut8(2550,3208 flip ud);
NOut8(2800,3208 flip ud);

/* left edge pads */

NVdd(47,525 rotate 3);
NIn8(47,775 rotate 3);
NIn8(47,1025 rotate 3);
NIn8(47,1275 rotate 3);
NIn8(47,1525 rotate 3);
NIn8(47,1775 rotate 3);
NIn8(47,2025 rotate 3);
NIn8(47,2275 rotate 3);
NIn8(47,2525 rotate 3);
NOut8(47,2775 rotate 3);

}
```

WIRES

```
/* wires for chip.cll */

Wires

{

via 0,0 poly;

/* wires from LFSR to comp.pla */

        /* from R7 */

                via 948,833 poly;
                wire metal 950,835 w 3 u 25;
                via 948,858 poly;
                wire poly 950,860 w 3 r 700 d 347;
                butt (1648,511);
                wire diff 1650,513 w 3 r 253;

        /* from R6 */

                via 938,838 poly;
                wire metal 940,840 w 3 u 30;
                via 938,868 poly;
                wire poly 940,870 w 3 r 720 d 341;
                butt (1658,527);
                wire diff 1660,529 w 3 r 243;

        /* from R5 */

                via 928,848 poly;
                wire poly 930,850 w 3 u 30 r 740 d 335;
                butt (1668,543);
                wire diff 1670,545 w 3 r 233;

        /* from R4 */

                wire poly 857,830 w 3 u 60 r 823 d 329;
                butt (1678,559);
                wire diff 1680,561 w 3 r 223;

        /* from R3 */

                wire poly 838,830 w 3 u 70 r 852 d 323;
                butt (1688,575);
```

```
                wire diff 1690,577 w 3 r 213;

        /* from R2 */

                wire poly 819,830 w 3 u 80 r 881 d 317;
                butt (1698,591);
                wire diff 1700,593 w 3 r 203;

        /* from R1 */

                wire poly 800,830 w 3 u 90 r 910 d 311;
                butt (1708,607);
                wire diff 1710,609 w 3 r 193;

        /* from R0 */

                wire poly 781,830 w 3 u 100 r 939 d 305;
                butt (1718,623);
                wire diff 1720,625 w 3 r 183;


/* wire from go/no go to output pad */

        wire diff 1895,489 w 3 l 30 d 99;
        butt (1862,388);
        wire poly 1864,390 w 3 r 986 d 200;


/* wires from CNTR to comp.pla */

        /* from C0 */

                wire metal 821,2528 w 3 d 8
                        l 51 d 495 r 780 d 1384 r 250;
                via 1798,639 diff;
                wire diff 1800,641 w 3 r 103;

        /* from C1 */

                wire metal 845,2527 w 3 r 50
                        d 492 r 665 d 1378 r 240;
                via 1798,655 diff;
                wire diff 1800,657 w 3 r 103;


/* wires from pla3 to comp.pla */

        /* from P00 */
```

```
                wire diff 2127,2063 w 2
                        d 73 1 377 d 1317 r 153;

        /* from PO1 */

                wire diff 2133,2063 w 2
                        d 83 1 373 d 1291 r 143;

        /* from PO2 */

                wire diff 2142,2063 w 2
                        d 93 1 372 d 1265 r 133;

        /* from PO3 */

                wire diff 2148,2063 w 2
                        d 103 1 368 d 1239 r 123;

        /* from PO4 */

                wire diff 2158,2063 w 2
                        d 113 1 367 d 1213 r 113;


/* wire from pla3 output to L1 */

        wire diff 2118,2063 w 2 d 13;
        via 2116,2048 diff;

        wire metal 2118,2050 w 3 d 110;
        via 2116,1938 diff;
        wire diff 2118,1940 w 2 r 139 d 131;


/* wire from pla3 output to L0 */

        wire diff 2112,2063 w 2 d 23;
        via 2110,2038 diff;
        wire metal 2112,2040 w 3 d 110;
        via 2110,1928 diff;
        wire diff 2112,1930 w 2 r 45 d 121;


/*  wire from pla3 input to L0 */

        wire diff 2087,2063 w 2 d 20;
        via 2085,2041 diff;
        wire metal 2087,2043 w 3 d 120;
```

```
        via 2085,1921 diff;
        wire diff 2087,1923 w 2 d 240 r 82;
        butt (2167,1681);
        wire poly 2169,1683 w 3 u 19;

/* wire from pla3 input to L1 */

        wire diff 2071,2063 w 2 d 30;
        via 2069,2031 diff;
        wire metal 2071,2033 w 3 d 110;
        via 2069,1921 diff;
        wire diff 2071,1923 w 2 d 250 r 198;
        butt (2267,1671);
        wire poly 2269,1673 w 3 u 29;

/* wire from L0 to L1 */

        wire diff 2168,1802 w 3 r 85;

/* wire from L0 to LFSR */

        wire diff 2152,1802 w 2 l 20;
        via 2130,1800 diff;
        wire metal 2132,1802 w 3 l 100 d 100 l 370;
        via 1680,1700 diff;
        wire diff 1682,1702 w 3 l 1080;
        via 600,1700 diff;
        wire metal 602,1702 w 3 d 915;

/*  wires from pla3 to input pads */

        wire diff 2055,2063 w 2 d 57 l 350 d 476 l 1200;
        via 503,1528 diff;
        wire metal 505,1530 w 3 l 330;
        wire diff 2039,2063 w 2 d 47 l 350 d 236 l 284;
        via 1403,1778 diff;
        wire metal 1405,1780 w 3 l 1230;
        wire diff 2023,2063 w 2 d 10 l 1317;
        via 704,2051 diff;
        wire metal 706,2053 w 3 d 23 l 530;

/* wire for counter reset */

        wire poly 802,2515 w 2 l 70 u 15;
```

```
        via 730,2528 poly;
        wire metal 732,2530 w 3 1 558;

/* wires from counter to pla3 */

        /* from C0 */

                via 1548,1928 diff;
                wire diff 1550,1930 w 3 r 37;
                via 1585,1928 diff;
                wire metal 1587,1930 w 3 r 250;
                via 1835,1928 diff;
                wire diff 1837,1930 w 3 r 250;
                via 2085,1928 diff;

        /* from C1 */

                wire metal 1559,1940 w 3 r 286;
                via 1843,1938 diff;
                wire diff 1845,1940 w 3 r 226;
                via 2069,1938 diff;


/* wires for feedback disconnect */

        /* from inverter to input pad */

                wire metal 1953,1809 w 3 1 8 u 470;
                via 1943,2277 diff;
                wire diff 1945,2279 w 3 1 1500;
                via 443,2277 diff;
                wire metal 445,2279 w 3 1 269;

        /* from inverter to pass transistor */

                wire metal 1963,1812 w 3 r 20 u 40;
                via 1981,1850 poly;
                wire poly 1983,1852 w 3 r 125;

        /* from feedback disconnect line to pass transistor*/

                via 1943,1898 poly;
                wire poly 1945,1900 w 3 r 15 u 45;
```

```
/* wires for shifting signal */

        /* from pad 4 to LFSR for psi2 */

                wire metal 930,799 w 4 r 12;
                via 940,797 diff;
                wire diff 942,799 w 3 d 149;
                via 940,648 diff;
                wire metal 942,650 w 3 d 30;
                via 940,618 diff;
                wire diff 942,620 w 3 d 50 l 392 u 710;
                via 548,1278 diff;
                wire metal 550,1280 w 3 l 375;

        /* from L0 to L1 to connect psi2 */

                wire metal 2168,1732 w 4 r 85;

        /* from L0 & L1 to pad 4 */

                wire metal 2268,1732 w 3 r 40 d 452 l 608;
                via 1698,1278 diff;
                wire diff 1700,1280 w 3 l 1150;

        /* from pad 3 to LFSR psi1 */

                wire metal 930,730 w 4 r 7 d 25 l 152;
                via 783,703 diff;
                wire diff 785,705 w 3 l 40;
                via 743,703 diff;
                wire metal 745,705 w 3 l 30;
                via 713,703 diff;
                wire diff 715,705 w 3 l 125;
                via 588,703 diff;
                wire metal 590,705 w 3 u 325 l 415;

        /* from L0 to L1 to connect psi1 */

                wire metal 2168,1800 w 4 r 85;

        /* from L0 & L1 to pad 3 */

                wire metal 2268,1800 w 3 r 50 d 770 l 625;
                via 1691,1028 diff;
                wire diff 1693,1030 w 3 l 1103;
                via 588,1028 diff;
```

```
/* wires to increment counter */

        /* from pad T2 to inverter */

                wire metal 895,3221 w 3 d 20 l 210
                        d 592 r 17;

        /* from inverter to CINbar */

                wire metal 713,2613 w 3 r 12 u 9 r 77;

        /* from pad T2 wire to CIN */

                wire metal 685,2660 w 3 l 20 d 100
                        r 80 u 47 r 57;


/* wire to introduce VDD */

        wire metal 100,575 w 30 r 200;


/* wires for phil and phi2 */

        /* from phil to CNTR phil */

                wire metal 580,3177 w 3 d 632 r 170 d 14;
                via 748,2529 poly;
                wire poly 750,2531 w 3 r 52;

        /* from phi2 to CNTR phi2 */

                wire metal 622,3177 w 3 d 77;
                via 620,3098 diff;
                wire diff 622,3100 w 3 r 100;
                via 720,3098 diff;
                wire metal 722,3100 w 3 r 148 d 509 l 24;

        /* from L0 phil to L1 phil */

                wire metal 2168,1808 w 3 r 85;

        /* from L0 & L1 phil to pad phil */

                wire metal 2268,1808 w 3 r 40 u 992 l 1408;
                via 898,2798 diff;
                wire diff 900,2800 w 3 l 300;
                via 598,2798 diff;
```

```
                wire metal 600,2800 w 3 l 20;

        /* from L0 phi2 to L1 phi2 */

                wire metal 2168,1793 w 3 r 85;

        /* from L0 & L1 phi2 to pad phi2 */

                wire metal 2268,1793 w 3 r 10;
                via 2276,1791 diff;
                wire diff 2278,1793 w 3 r 50 u 50 l 10;
                via 2316,1841 diff;
                wire metal 2318,1843 w 3 u 970 l 1448;

        /* from LFSR phi1 to pad phi1 */

                wire metal 781,724 w 3 d 9;
                via 779,713 diff;
                wire diff 781,715 w 3 l 26;
                via 753,713 diff;
                wire metal 755,715 w 3 l 125;
                via 628,713 diff;
                wire diff 630,715 w 3 l 60;
                via 568,713 diff;
                wire metal 570,715 w 3 l 170;
                via 398,713 diff;
                wire diff 400,715 w 3 u 1885;
                via 398,2598 diff;
                wire metal 400,2600 w 3 r 180;

        /* from LFSR phi2 to pad phi2 */

                wire metal 930,738 w 3 r 32;
                via 960,736 diff;
                wire diff 962,738 w 3 r 48;
                via 1008,736 diff;
                wire metal 1010,738 w 3 u 52 r 150 d 290;
                via 1158,498 diff;
                wire diff 1160,500 w 3 l 770 u 2635 r 232;
                via 620,3133 diff;

/* Vdd wires */

        /* Vdd pad to LFSR */

                wire metal 290,575 w 3 r 250 d 50 r 100 u 60;
                via 638,583 diff;
                wire diff 640,585 w 3 u 53;
```

```
        via 638,636 diff;
        wire metal 640,638 w 3 r 130;

/* Vdd pad to comp.pla */

        wire metal 290,575 w 3 d 170 r 1810
                u 90 l 75;

/* Vdd from comp.pla to L0 and L1 */

        wire metal 2100,495 w 3 r 450 u 1222;
        via 2548,1715 diff;
        wire diff 2550,1717 w 3 l 260;
        via 2288,1715 diff;
        wire metal 2290,1717 w 3 l 22;
        wire diff 2550,1717 w 3 u 59 l 260;
        via 2288,1774 diff;
        wire metal 2290,1776 w 4 l 22;

/* Vdd from L0 to L1 */

        wire metal 2168,1717 w 4 r 85;
        wire metal 2168,1776 w 4 r 85;

/* Vdd from L0 to inverter */

        wire metal 2152,1776 w 3 l 102;
        via 2048,1774 diff;
        wire diff 2050,1776 w 3 l 150 u 54 r 58;

/* Vdd from L1/comp wire to pla3 */

        wire diff 2390,1776 w 3 u 450 l 340;
        via 2048,2224 diff;
        wire metal 2050,2226 w 3 d 29;

/* Vdd from pla3/L1 wire to CNTR */

        wire metal 2050,2226 w 4 u 339 l 1205;
        via 898,2563 diff;
        wire diff 900,2565 w 3 u 73 l 45;
        via 853,2636 diff;
        wire metal 855,2638 w 4 l 10;

/* Vdd from CNTR to inverter */

        wire metal 802,2638 w 4 l 95 d 7;
```

```
/* GND wires */

        /* to inverter (CNTR) */

                wire metal 145,2500 w 4 r 562;
                via 705,2498 diff;
                wire diff 707,2500 w 4 u 102;

        /* from inverter GND wire to CNTR */

                wire diff 706,2584 w 4 r 60;
                via 764,2582 diff;
                wire metal 766,2584 w 4 r 35;

        /* from inverter GND wire to CNTR reset GND */

                wire diff 705,2502 w 4 r 80;
                via 783,2500 diff;
                wire metal 785,2502 w 4 r 20;

        /* to pla3 */

                wire metal 2177,2150 w 4 r 23;
                via 2198,2148 diff;
                wire diff 2200,2150 w 4 r 170;
                via 2368,2148 diff;
                wire metal 2370,2150 w 4 r 935;

        /* L0 to L1 GND wires */

                wire metal 2168,1703 w 4 r 85;
                wire metal 2168,1756 w 4 r 85;
                via 2178,1701 diff;
                via 2178,1754 diff;
                wire diff 2180,1703 w 4 u 55;

        /* from L1 to pla3 */

                wire metal 2268,1756 w 4 r 22;
                via 2288,1754 diff;
                wire diff 2290,1756 w 4 r 160;
                via 2448,1754 diff;
                wire metal 2450,1756 w 4 u 395;

        /* from inverter to L0 */

                wire metal 1957,1802 w 4 d 46;
                via 1955,1754 diff;
```

```
                wire diff 1957,1756 w 4 r 100;
                via 2055,1754 diff;
                wire metal 2057,1756 w 4 r 95;

        /* to comp.pla */

                wire metal 1970,145 w 4 u 205;
                via 1968,348 diff;
                wire diff 1970,350 w 4 l 130 u 100;
                via 1838,448 diff;
                wire metal 1840,450 w 4 r 130 u 25;

        /* to LFSR */

                wire metal 955,605 w 4 d 125;
                via 953,478 diff;
                wire diff 955,480 w 4 d 200;
                via 953,278 diff;
                wire metal 955,280 w 4 d 135;


/* wire for pla3 input clock */

        wire poly 2080,2060 w 3 l 100 u 820;
        via 1978,2878 poly;
        wire metal 1980,2880 w 3 l 835 u 343;

}
```

APPENDIX D

In order to produce a PLA using the CAD tools available at AFIT, one must first produce a set of equations which will be called a ".equ" file. This file is then run through eqntott, which is another CAD tool. The output of eqntott is a file marked with the extention ".prein". This file is then run through the PLA generator called "mkpla".

The following sets of equations represent the .equ files for the PLA's used in the design in Chapter 5.

.equ File for the Traffic Controller

```
INORDER = C TL TS y1 y0;

OUTORDER = Y0 Y1 ST HL0 HL1 FL0 FL1;

Y0 =  (TS & !y0 & y1) | (C & !TL & y0 & y1) | (!C & y0 & y1)
      | (TL & y0 & y1) | (!TS & y0 & !y1);

Y1 =  (C & TL & !y0 & !y1) | (!TS & !y0 & y1)
      | (TS & !y0 & y1) | (C & !TL & y0 & y1);

ST =  (C & TL & !y0 & !y1) | (!C & y0 & y1) | (!C & y0 & y1)
      | (TL & y0 & y1) | (TS & y0 & !y1);

HL0 = (C & !TL & y0 & y1) | (!C & y0 & y1) | (TL & y0 & y1)
      | (!TS & y0 & !y1) | (TS & y0 & !y1);

HL1 = (!TS & !y0 & y1) | (TS & !y0 & y1);
```

```
FL0 = (!C & !y0 & !y1) | (!TL & !y0 & !y1)
      | (C & TL & !y0 & !y1) | (!TS & !y1 & y1)
      | (TS & !y0 & y1);

FL1 = (!TS & y0 & !y1) | (TS & y0 & !y1);
```

.equ File for the Comparator PLA

```
INORDER = PO0 PO1 PO2 PO3 PO4 C1 C0 R7 R6 R5 R4 R3 R2 R1 R0;

OUTORDER = GO;

GO = (!C1 & C0 & !PO$ & PO3 & !PO2 & !PO1 & PO0 &
        !R7 & R6 & !R5 & !R4 & !R3 & !R2 & !R1 & !R0) |

     (C1 & !C0 & !PO4 & !PO3 & PO2 & !PO0 &
        R7 & !R6 & !R5 & R4 & !R3 & !R2 & !R1 & !R0) |

     (C1 & C0 & PO4 & PO3 & !PO2 & !PO1 & ! PO0 &
        !R7 & R6 & R5 & !R4 & !R3 & R2 & !R1 & !R0) |

     (!C1 & C0 & PO4 & PO3 & !PO2 & !PO1 & PO0 &
        R7 & R6 & !R5 & R4 & R3 & !R2 & !R1 & R0) |

     (C1 & !C0 & PO4 & !PO3 & PO2 & PO1 & !PO0 &
        !R7 & !R6 & R5 & R4 & !R3 & R2 & R1 & !R0) |

     (C1 & C0 & PO4 & PO3 & !PO2 & !PO1 & !PO0 &
        !R7 & R6 & !R5 & !R4 & R3 & R2 & !R1 & R0) |

     (C1 & C0 & !PO4 & PO3 & !PO2 & !PO1 & !PO0 &
        R7 & R6 & !R5 & R4 & !R3 & !R2 & R1 & R0) |

     (!C1 & !C0 & PO4 & !PO3 & !PO2 & PO1 & !PO0 &
        !R7 & !R6 & R5 & R4 & !R3 & R2 & !R1 & !R0) |

     (!C1 & !C0 & !PO4 & !PO3 & !PO2 & PO1 & !PO0 &
        R7 & R6 & !R5 & !R4 & R3 & R2 & !R1 & R0) |

     (!C1 & !C0 & !PO4 & !PO3 & !PO2 & PO1 & !PO0 &
        !R7 & !R6 & R5 & R4 & !R3 & !R2 & R1 & R0);
```

Bibliography

1. Bennetts, R. G. Design of Testable Logic Circuits. London: Addison-Wesley, 1984.

2. Berg, William C. and Robert D. Hess, "COMET: A Testability Analysis and Design Modification Package," Proceedings of the 1982 International Test Conference. 364-378. IEEE Press, Silver Spring, MD, 1982.

3. Bhaskar, K. S., "Signature Analysis: Yet Another Perspective," Proceedings of the 1982 International Test Conference. 132-134. IEEE Press, Silver Spring, MD, 1982.

4. Chang, Herbert Y., Eric Manning, and Gernot Metze Fault Diagnosis of Digital Systems. New York: Wiley-Interscience, 1970.

5. Eichelberger, E. B. and T. W. Williams, "A Logic Design Structure for LSI Testability," Proceedings of the 14th Design Automation Conference. 462-468. IEEE Press, New York, June, 1977.

6. Friedman, Arthur D., Premachandran R. Menon Fault Detection in Digital Circuits., 1971.

7. Hayes, John P. and Edward J. McCluskey "Testability Considerations in Microprocessor-Based Design," Computer, 13: 17-26 (March 1980).

8. Komonytsky, Donald, "LSI Self-Test Using Level Sensitive Scan Design and Signature Analysis," Proceedings of the 1982 International Test Conference. 414-424. IEEE Press, Silver Springs, MD, 1982.

9. Konemann, Bernd, Joachim Mucha, and Gunther Zwiehoff, "Built-In Logic Block Observation Techniques," Proceedings of the 1979 Test Conference. 37-41. IEEE Press, New York, N.Y., 1979.

10. Kovijanic P. G., "Testability Analysis," Proceedings of the 1979 Test Conference. 310-316. IEEE Press, New York, N.Y., 1979.

11. Ratiu, Ion M., Alberto Sangiovanni-Vincentelli, and Donald O. Pederson, "VICTOR: A Fast VLSI Testability Analysis Program," Proceedings of the 1982 International Test Conference. 397-401. IEEE Press, Silver Springs, MD, 1982.

12. Susskind, Alfred K. Testability and Reliability of LSI, 15 September 1973--31 July 1980. RADC-TR-80-384. Rome Air Development Center, Rome, N.Y., January 1981 (AD-A096 310).

13. Williams, T. W. and Kenneth P. Parker "Testing Logic Networks and Designing for Testability," Computer, 12: 9-12 (October 1979).

VITA

Captain Michael Kaplan was born on 25 January 1958 in Boston, Massachusetts. He graduated from high school in Randolph, Massachusetts, in 1975 and attended Southeastern Massachusetts University from which he received the degree of Bachelor of Science in Electrical Engineering in June 1979. In February 1980, he received a commission in the USAF through Officer Training School. Following OTS he was assigned to Hanscom AFB and served there in the Deputy for Development Plans. His next assignment was at Los Angeles AFS where he served in the Deputy for Space Navigation Systems as a software and contract manager, until entering the School of Engineering, Air Force Institute of Technology, in May 1983.

Permanent address: 90 Fernandez Circle
Randolph, Massachusetts 02368

UNCLASSIFIED

SECURITY CLASSIFICATION OF THIS PAGE

REPORT DOCUMENTATION PAGE

1a. REPORT SECURITY CLASSIFICATION UNCLASSIFIED	1b. RESTRICTIVE MARKINGS
2a. SECURITY CLASSIFICATION AUTHORITY	3. DISTRIBUTION/AVAILABILITY OF REPORT Approved for public release; distribution unlimited
2b. DECLASSIFICATION/DOWNGRADING SCHEDULE	
4. PERFORMING ORGANIZATION REPORT NUMBER(S) AFIT/GE/ENG/84D-39	5. MONITORING ORGANIZATION REPORT NUMBER(S)
6a. NAME OF PERFORMING ORGANIZATION School of Engineering 6b. OFFICE SYMBOL (If applicable) AFIT/ENG	7a. NAME OF MONITORING ORGANIZATION
6c. ADDRESS (City, State and ZIP Code) Air Force Institute of Technology Wright-Patterson AFB, Ohio 45433	7b. ADDRESS (City, State and ZIP Code)
8a. NAME OF FUNDING/SPONSORING ORGANIZATION 8b. OFFICE SYMBOL (If applicable)	9. PROCUREMENT INSTRUMENT IDENTIFICATION NUMBER
8c. ADDRESS (City, State and ZIP Code)	10. SOURCE OF FUNDING NOS. PROGRAM ELEMENT NO. / PROJECT NO. / TASK NO / WORK UNIT NO
11. TITLE (Include Security Classification) See Box 19	

12. PERSONAL AUTHOR(S)
Michael Kaplan, B.E.E., Capt, USAF

13a. TYPE OF REPORT	13b. TIME COVERED	14. DATE OF REPORT (Yr., Mo., Day)	15. PAGE COUNT
MS Thesis	FROM _____ TO _____	1984 December	135

16. SUPPLEMENTARY NOTATION

17. COSATI CODES			18. SUBJECT TERMS (Continue on reverse if necessary and identify by block number)
FIELD	GROUP	SUB. GR.	Integrated circuits, VLSI Testing, Self-Testing, Test Methods, Testability.
09	01		

19. ABSTRACT (Continue on reverse if necessary and identify by block number)

Title: DESIGNING VLSI CIRCUITS FOR TESTABILITY
Thesis Advisor: Harold W. Carter, Lt Col, USAF

Approved for public release: IAW AFR 190-17
LYNN E. WOLAVER
Dean for Research and Professional Development
AFIT, Wright-Patterson AFB, OH

20. DISTRIBUTION/AVAILABILITY OF ABSTRACT	21. ABSTRACT SECURITY CLASSIFICATION
UNCLASSIFIED/UNLIMITED ☒ SAME AS RPT ☐ DTIC USERS ☐	UNCLASSIFIED

22a. NAME OF RESPONSIBLE INDIVIDUAL	22b. TELEPHONE NUMBER (Include Area Code)	22c. OFFICE SYMBOL
Harold W. Carter, Lt Col, USAF	513-255-5533	AFIT/ENG

DD FORM 1473, 83 APR EDITION OF 1 JAN 73 IS OBSOLETE

UNCLASSIFIED

SECURITY CLASSIFICATION OF THIS PAGE

Very large scale integrated circuits are difficult to test once fabricated. This is due to the large number of internal circuit nodes that are not accessible as probe points, and the small number of primary inputs and outputs available to exercise and observe these internal nodes. Methods to develop test vectors for such circuits (e.g. d-Algorithm) are both difficult and time consuming. For this reason a method is needed to design circuits which are highly testable or self-testing.

Using computer aided design tools, a circuit is designed which exhibits a self-test scheme. The design concepts used include a level-sensitive scan design and signature analysis. When completed the cirucit is evaluated from the standpoint of how much design effort, circuit area used, and test effort compares with the same parameters for a circuit without testability characteristics included.

Environmental dependency (the conditions of circuit operation) is an important consideration when determining if self-test capability is warranted. When the circuit is one which is inaccessible after deployment or needed without much testing time available, self-test capability is worthwhile. This is a very necessary capability for satellite systems or systems which must be replaced without delay (e.g. component of F-16 fire control system).

For circuits which are strained for space on a semiconductor chip due to their complexity, self-test capability may not be practical due to the increased area used for such circuitry. Finally, self-test capability offers little help in determining the location of a fault if the circuit malfunctions. Therefore, if deterministic fault analysis is required, self-test capability will not provide the necessary data.

END

FILMED

5-85

DTIC