AD-A154 961 DEVELOPMENT OF WIDE BAND RECORDING MATERIALS(U) 1/1
HONEYWELL INC BLOOMINGTON MN PHYSICAL SCIENCES CENTER
T J MORAVEC APR 85 RADC-TR-85-65 F19628-82-C-0029

UNCLASSIFIED F/G 14/5 NL

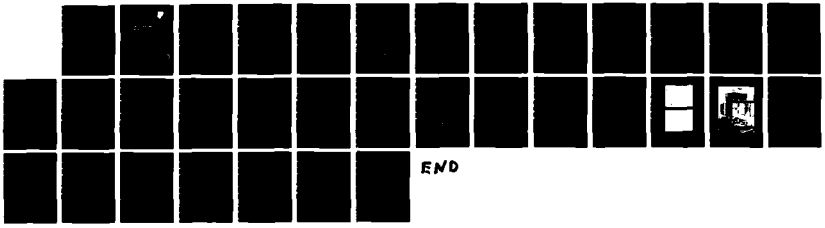

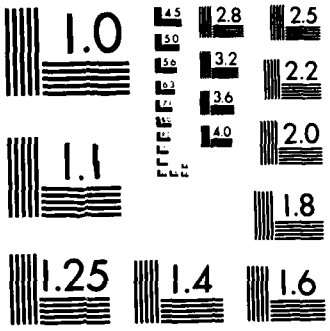

MICROCOPY RESOLUTION TEST CHART
NATIONAL BUREAU OF STANDARDS-1963-A

AD-A154 961

(2)

RADC-TR-85-65
Final Technical Report
April 1985

DEVELOPMENT OF WIDE BAND RECORDING MATERIALS

Honeywell Physical Sciences Center

Thomas J. Moravec

APPROVED FOR PUBLIC RELEASE; DISTRIBUTION UNLIMITED

DTIC
ELECTE
JUN 13 1985
S D
B

DTIC FILE COPY

ROME AIR DEVELOPMENT CENTER
Air Force Systems Command
Griffiss Air Force Base, NY 13441-5700

85 5 21 023

This report has been reviewed by the RADC Public Affairs Office (PA) and is releasable to the National Technical Information Service (NTIS). At NTIS it will be releasable to the general public, including foreign nations.

RADC-TR-85-65 has been reviewed and is approved for publication.

APPROVED: John J. Larkin

JOHN J. LARKIN
Project Engineer

APPROVED: Harold Roth

HAROLD ROTH, Director
Solid State Sciences Division

FOR THE COMMANDER: John A. Ritz

JOHN A. RITZ
Acting Chief, Plans Office

If your address has changed or if you wish to be removed from the RADC mailing list, or if the addressee is no longer employed by your organization, please notify RADC (ESM) Hanscom AFB MA 01731. This will assist us in maintaining a current mailing list.

Do not return copies of this report unless contractual obligations or notices on a specific document requires that it be returned.

UNCLASSIFIED
SECURITY CLASSIFICATION OF THIS PAGE

REPORT DOCUMENTATION PAGE

1a. REPORT SECURITY CLASSIFICATION UNCLASSIFIED	1b. RESTRICTIVE MARKINGS N/A
2a. SECURITY CLASSIFICATION AUTHORITY N/A	3. DISTRIBUTION/AVAILABILITY OF REPORT Approved for public release; distribution unlimited.
2b. DECLASSIFICATION/DOWNGRADING SCHEDULE N/A	
4. PERFORMING ORGANIZATION REPORT NUMBER(S) N/A	5. MONITORING ORGANIZATION REPORT NUMBER(S) RADC-TR-85-65
6a. NAME OF PERFORMING ORGANIZATION Honeywell Physical Sciences Center 6b. OFFICE SYMBOL (If applicable) RRC	7a. NAME OF MONITORING ORGANIZATION Rome Air Development Center (ESM)
6c. ADDRESS (City, State and ZIP Code) 10701 Lyndale Avenue South Bloomington MN 55420	7b. ADDRESS (City, State and ZIP Code) Hanscom AFB MA 01731
8a. NAME OF FUNDING/SPONSORING ORGANIZATION Rome Air Development Center 8b. OFFICE SYMBOL (If applicable) (ESM)	9. PROCUREMENT INSTRUMENT IDENTIFICATION NUMBER F19628-82-C-0029
8c. ADDRESS (City, State and ZIP Code) Hanscom AFB MA 01731	10. SOURCE OF FUNDING NOS. PROGRAM ELEMENT NO. 62702F; PROJECT NO. 4600; TASK NO. 17; WORK UNIT NO. 50

11. TITLE (Include Security Classification)
DEVELOPMENT OF WIDE BAND RECORDING MATERIALS

12. PERSONAL AUTHOR(S)
Thomas J. Moravec

13a. TYPE OF REPORT	13b. TIME COVERED	14. DATE OF REPORT (Yr., Mo., Day)	15. PAGE COUNT
Final	FROM Jan 82 TO Sep 84	April 1985	36

16. SUPPLEMENTARY NOTATION
N/A

17. CCSATI CODES

FIELD	GROUP	SUB. GR.
20	01	
20	06	

18. SUBJECT TERMS (Continue on reverse if necessary and identify by block number)
Thin Films, Tellurium, Coatings, Optical Recording Media, Diamond-like Films, Magneto-Optic Media (See Reverse)

19. ABSTRACT (Continue on reverse if necessary and identify by block number)

This report is the final report of a program to develop hard carbon (diamond-like) coatings as environmentally protective coatings for laser disc optical recording media. Two methods for producing the hard carbon films on the metallic thin film media were studied: plasma CVD by a hydrocarbon gas (PCVD), and direct Carbon Ion Beam Deposition (CIBD). Both methods tended to remove the sensitive media layer before the hard carbon layer could be formed. An additional oxide layer deposited on the metallic media solved this problem. This hard carbon/oxide/metallic media system was successful in resisting degradation due to moisture.

20. DISTRIBUTION/AVAILABILITY OF ABSTRACT UNCLASSIFIED/UNLIMITED ☒ SAME AS RPT ☐ DTIC USERS ☐	21. ABSTRACT SECURITY CLASSIFICATION UNCLASSIFIED
22a. NAME OF RESPONSIBLE INDIVIDUAL John J. Larkin	22b. TELEPHONE NUMBER (Include Area Code) (617) 861-5176 22c. OFFICE SYMBOL RADC (ESM)

DD FORM 1473, 83 APR EDITION OF 1 JAN 73 IS OBSOLETE.

UNCLASSIFIED
SECURITY CLASSIFICATION OF THIS PAGE

18. SUBJECT TERMS (Continued)

Terbium Iron Films
Magnetic Thim Films

Table of Contents

Section		Page
1	INTRODUCTION	1
2	DEPOSITION OF OPTICAL RECORDING MEDIA	2
	2.1 Write Once Media — Te Films on Glass	2
	2.2 Erasable Media — TbFe Films on Glass	2
3	PROTECTIVE COATING EXPERIMENTS	5
	3.1 Hard Carbon Coating on Te	5
	3.1.1 PCVD Experiments	5
	3.1.2 CIBD Experiments	9
	3.2 Hard Carbon Coatings on Te with Buffer Layers	11
	3.3 Hard Carbon Coatings on TbFe	12
4	TESTING	13
	4.1 Write Once Media	13
	4.2 Erasable Media	17
5	SUMMARY AND CONCLUSIONS	23
6	ACKNOWLEDGEMENTS	24
7	PUBLICATIONS	25
8	REFERENCES	26

DTIC
ELECTE
JUN 1 3 1985
B

Accession For
NTIS GRA&I
DTIC TAB
A-1

List of Illustrations

Figure		Page
1	Typical System Installation	3
2	Metal Holder and Shields to Obtain Uniform TE Coatings on 1 inch by 3 inch Glass Slides	4
3	Schematic of Ion Beam Sputtering Process	4
4	Sectional Schematic of Vacuum Apparatus for Carbon Coating Deposition by RF Plasma Decomposition of Hydrocarbon Gases	6
5	Carbon Ion Gun Schematic in Horizontal Configuration (Power Supplies A, B, C, and D Provide Bias to Maintain Plasma and Determine Ion Energies)	10
6	Media Test Bed	13
7	Twelve-Inch Test Fixture Showing Sample Mounting	14
8	Coated Sample under Test	14
9	First Three Cycles at the Z/AD Temperature/Humidity Test	15
10	Hole Pattern in Protected TE Layers 8K Magnification.	18
11	Apparatus for Measurement of Hysteresis in Faraday Rotation versus Magnetic Field Characteristics of TB-FE Films	19
12	Schematic Diagram of the Apparatus of Figure 11	20
13	Typical Faraday Rotation versus Magnetic Field Characteristics of TB-FE Films	21

List of Tables

Table		Page
1	Threshold Writing Powers	15
2	Percent Transmission, Reflection and Absorption of 0.2μm PPE Coated TE at λ = 632A, Before and After the Humidity Test	16
3	Results of Temperature/Humidity Stress Test on TbFe Media	21

Section 1
Introduction

This is the final report for a program whose goal was to develop hard carbon (diamond-like) coatings as environmentally protective coatings for laser disc optical recording media. Most such media loses its recording characteristics upon exposure to moisture and abrasion. During the past five years, the Honeywell Physical Sciences Center has developed and studied the deposition processes for producing hard carbon protective thin films. These carbon coatings are mostly amorphous in structure[1] and have been referred to as diamond-like in recognition of their typical physical characteristics: high mechanical hardness (2000 Knoop), optical transparency with refractive index greater than 2.0 in the visible and infrared regions, high electrical insulation ($>10^{10}$ ohm cm) and chemical inertness[1,2]. The most common technique for producing these films is by plasma decomposition of a hydrocarbon gas (or plasma CVD, PCVD), and subsequent deposition of a carbon film on one of the plasma system electrodes[2,3]. We have used both this technique and direct carbon ion beam deposition (CIBD)[3] in experiments to coat optical recording media.

At the present state of the art, the deposition parameters for obtaining hard carbon layers must be empirically determined for each new substrate configuration. In this program, we fabricated write once media [tellurium (Te) thin films] and also used erasable media [terbium-iron (TbFe)] from another program as the substrates for carbon film deposition. Then, we conducted a series of experiments to determine the optimum conditions for deposition of hard carbon on these media. The coated samples were tested, and the results are presented in Section 4. We summarize the program in Section 5. In general, the hard carbon films appear to be effective in protecting optical recording media against moisture degradation.

Section 2
Deposition of Optical Recording Media

2.1 WRITE ONCE TEST SAMPLES — TE FILMS ON GLASS

All the Te samples were prepared at the Optical Peripherals Laboratory (OPL) of Magnetic Peripherals, Inc. (MPI). The samples were glass slides (3 in. by 1 in.) that were coated with pure tellurium. The coating procedure is described below:

a) Cleaning Procedure

The glass slides were cleaned ultrasonically with MICRO (a cleaning solution from International Products Corporation, New Jersey), rinsed with DI water and blow dried, then rinsed with methanol and blow dried again.

b) Deposition Procedure

The glass slides were coated with pure tellurium by electron beam evaporation. The deposition chamber is a 19-inch bell jar containing three Airco Temescal SFIH-270-1, single pocket electron guns with a 7 cc crucible. Gun number 1 was used for tellurium deposition. The system is equipped with a 14 kW electron beam power supply (Model number CV-14 A110) and three rate-and-thickness controllers (FDC 8000-1) from Airco Temescal, California. The system is shown in Figure 1.

The slides were mounted radially on a round steel fixture, and the fixture was rotated during deposition (Figure 2). To obtain uniform thickness along the length of the slide, four 1-inch-wide steel bars were kept at right angles below the rotating fixture as shown in Figure 2. The masking of the metal flux this way gives a thickness uniformity of ± 3 percent at the coating surface. During deposition, the background pressure was in the 10^{-6} Torr range and the deposition rate was 5Å/sec. The Te coating thickness was 250-300Å.

2.2 ERASABLE MEDIA — TbFe FILMS ON GLASS

TbFe films were prepared under contract F30602-84-C-0037 by ion beam sputtering. Ion beam sputtering is a low-temperature sputtering vacuum deposition process. Glass slides were prepared as in 2.1 a), and loaded in a diffusion pumped bell jar vacuum system whose base pressure was 5 by 10^{-7} Torr. A 50 mA beam of 2000V inert gas ions from a Kaufman-type ion source was directed at a Fe metal target, which had a mosaic of Tb pieces placed

upon it to obtain the desired composition. Glass slides were placed above the target to catch the sputtered target material (Figure 3). In this way, 300Å films of TbFe were deposited onto the slides. A second target of SiO_2 could be rotated into the beam so that a 1000Å film of SiO_2 could be coated onto the TbFe without breaking vacuum.

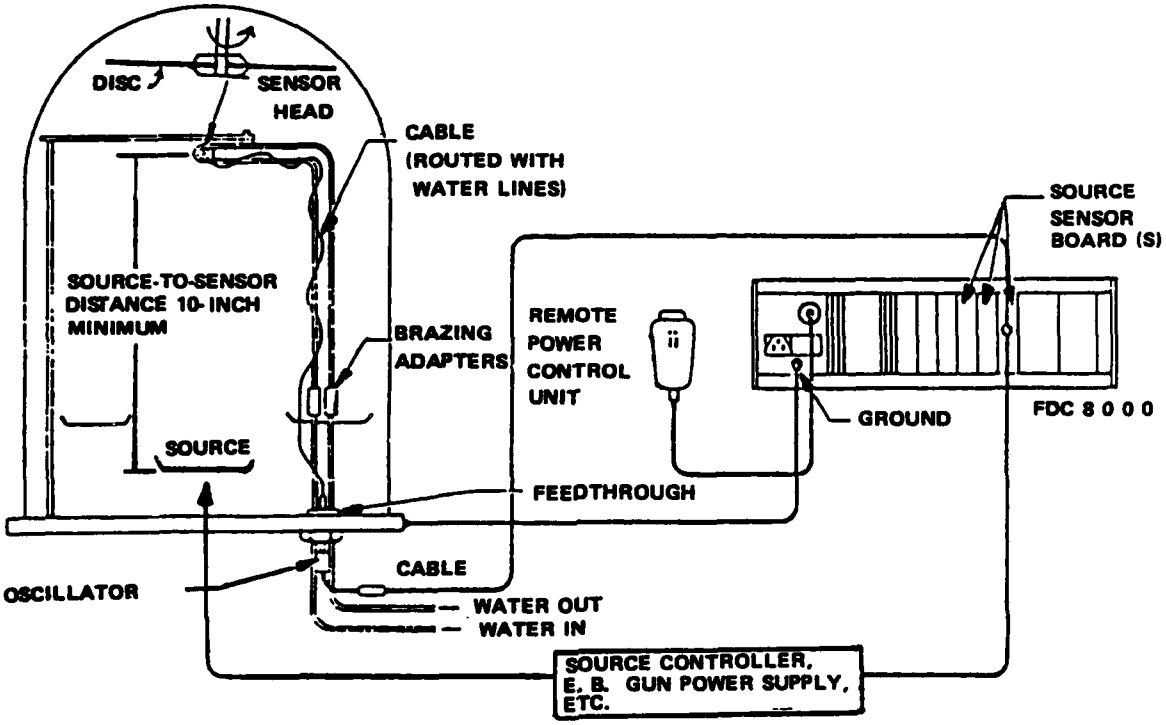

Figure 1. Typical System Installation

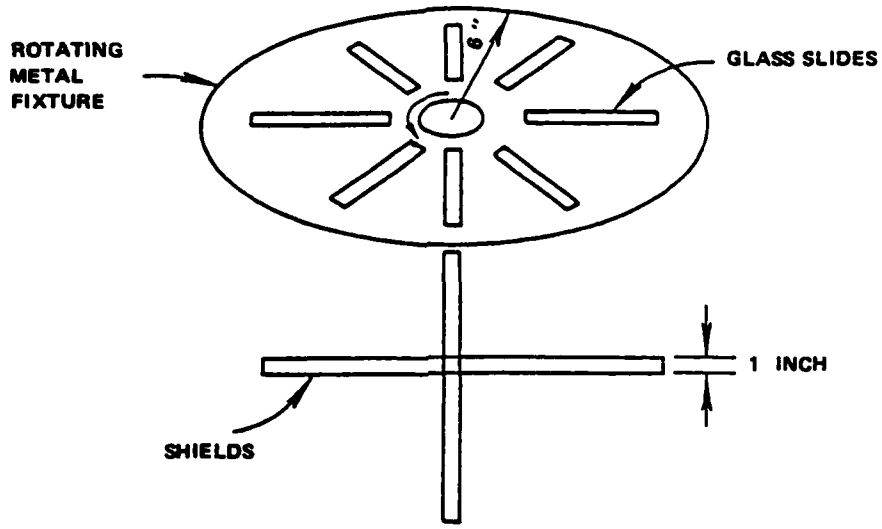

Figure 2. Metal Holder and Shields to Obtain Uniform TE Coatings on 1 inch by 3 inch Glass Slides

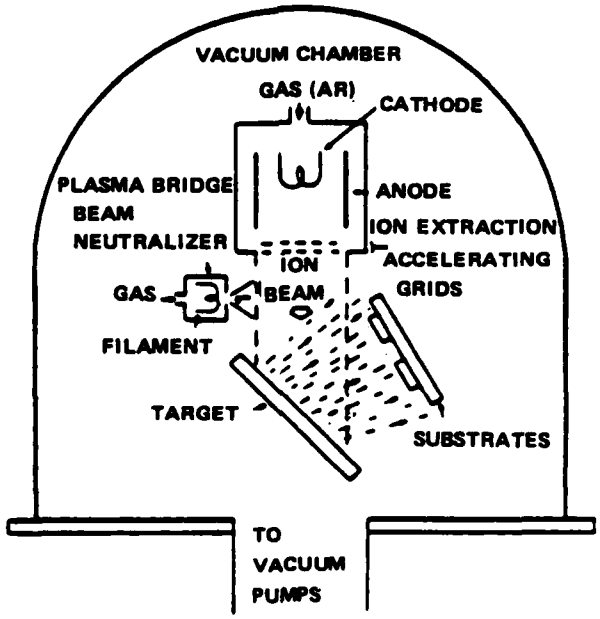

Figure 3. Schematic of Ion Beam Sputtering Process

Section 3
Protective Coating Experiments

3.1 HARD CARBON COATINGS ON Te

3.1.1 PCVD Experiments

The first experiments to produce hard carbon films on Te were performed by the plasma chemical vapor deposition (PCVD) method. An rf plasma decomposes a hydrocarbon gas, resulting in a carbon film. With this deposition method, we have had success in coating a variety of metals, semiconductors, and glasses. However, with each new substrate material coated, the deposition conditions that will result in adherent coatings must be determined.

Description of the System

Experiments were performed in a conventional rf sputtering system (GCA manufacturer) upgraded by several modifications by Honeywell. The resultant system, Figure 4, has two parallel 15-inch, copper-lined aluminum electrodes which are water-cooled. The top electrode can be raised or lowered to adjust the interelectrode spacing, which is one of the factors influencing the dc bias that the plasma established on the cathode (called self-bias). Both electrodes are shielded to contain the plasma and the region that collects the deposit, and to obtain the high bias required to deposit hard films. The gas is introduced into the chamber through a gas manifold that branches into five tubes (not shown in Figure 4) of the same length; i.e., with the same resistance. Therefore, each tube provides the same gas flow rate. The outlets of these five tubes are located close to the chamber bottom and are approximately 72 degrees apart.

In order to secure more uniform gas distribution, all of these outlets deliver the gas to a common perforated circular tube lying on the chamber bottom. The gas, distributed uniformly, passes between the glass wall of the chamber and the bottom electrode and comes into the interelectrode space where the glow discharge and the deposition occur. The unused gas and gaseous byproducts are pumped out through a 4.5-inch hole in the center of the bottom electrode and a 5-inch glass tube by the diffusion pump. This configuration ensures a uniform radial gas flow in the discharge region, resulting in uniform decomposition of gas and deposition of the film.

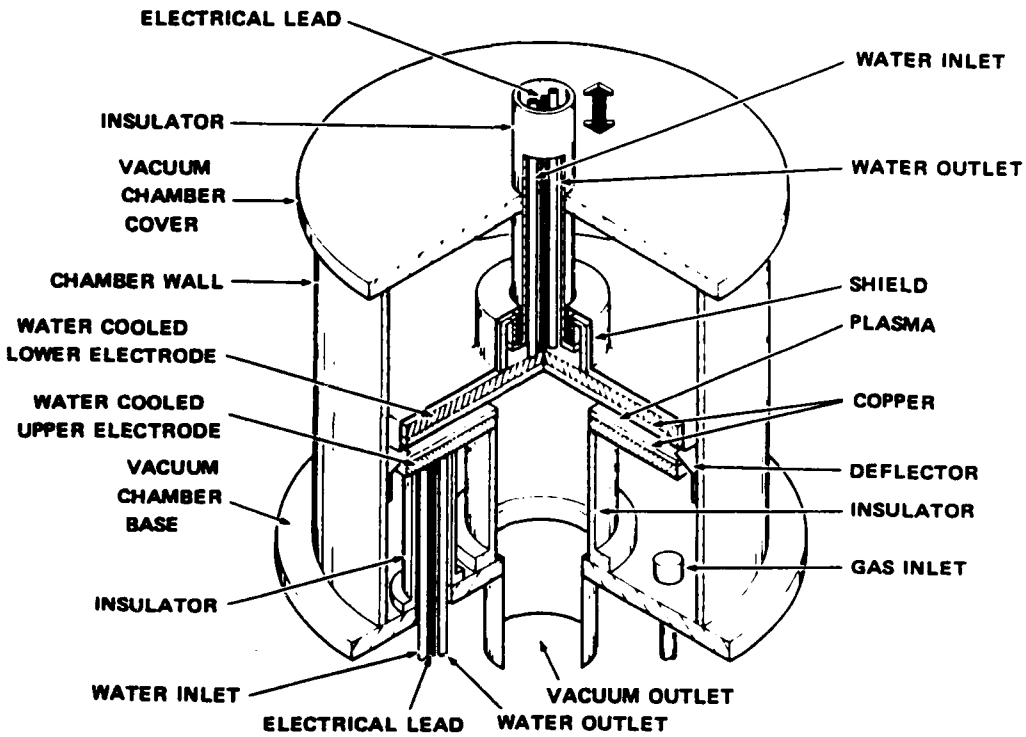

Figure 4. Sectional Schematic of Vacuum Apparatus for Carbon Coating Deposition by RF Plasma Decomposition of Hydrocarbon Gases

Optimum conditions determined in the past for producing hard, transparent carbon films on glass substrates from ethane gas for a 15-inch diameter electrode are:

i) rf power: 500W
ii) flow rate: 8.5 ST cc/min
iii) interelectrode spacing: 5.5 cm
iv) deposition pressure: 8×10^{-3} Torr
v) self-bias: 500V
vi) deposition rate: ~80Å/min
vii) ethane pressure: 8×10^{-3} Torr

Deposition Experiments

Te samples to be coated were "dedusted" by flushing with ionized N_2 gas and secured to the upper (hot rf) electrode. Next, the system was closed and evacuated by diffusion pump to 2 by 10^{-6} Torr before introduction of ethane.

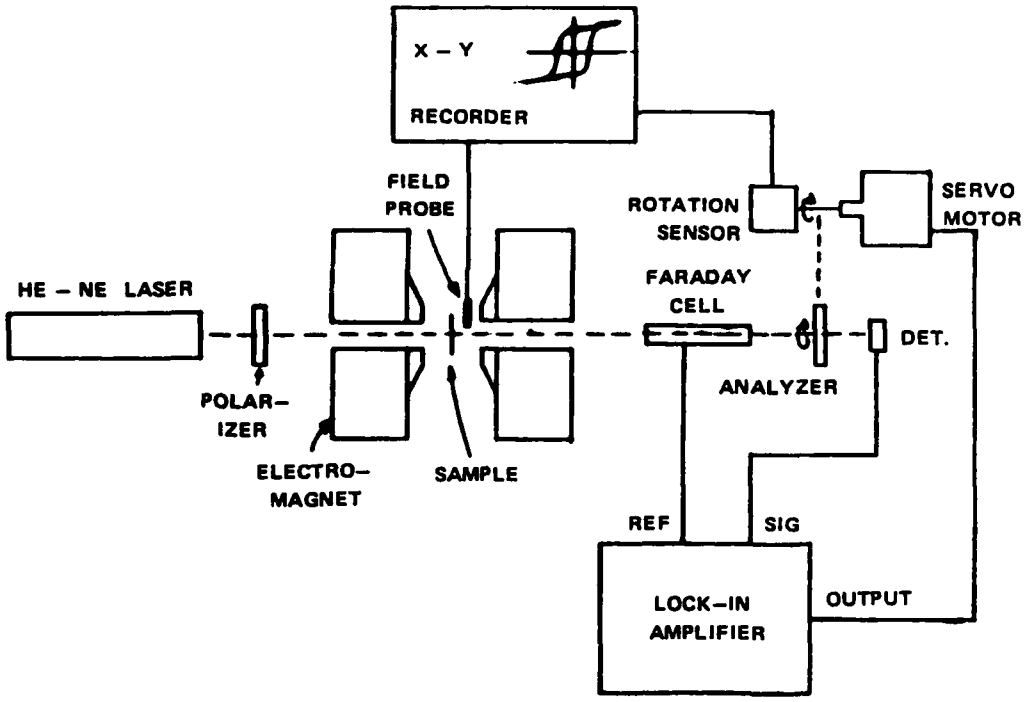

Figure 12. Schematic Diagram of the Apparatus of Figure 11

In this measurement the sample was mounted in a high-field electromagnet and subjected to applied fields ranging from −6kG to +6kG. The beam from a small He-Ne laser was used for the Faraday rotation measurement. First the light was polarized by a Nicol prism type polarizer, then directed through the sample, then passed through a Faraday modulator which dithered the Faraday rotation to allow phase-sensitive detection. Finally, the beam was directed through a polarization analyzer before arriving at a detector.

A typical hysteresis loop is shown in Figure 13. The rectangular shape of the loop indicates that this material has the perpendicular magnetic anisotropy needed for establishment of stable vertical magnetic domains. The width of the loop indicates a coercivity of 1.7 kG and the height indicates a Faraday rotation of 0.6 degree.

These samples were subjected to two types of environmental exposure tests. The first was a two month shelf storage test under office environment conditions. This exposure was followed by a ten-hour stress test at 70°C and 80% relative humidity. For each sample, the parameters of the Faraday rotation vs. field loop, as well as the degree of visible corrosion, were used to check for environmentally-induced degradation in the media material. The changes in the coercivity and remanent Faraday rotation, as well as the percentage of corroded film area, are summarized in Table 3.

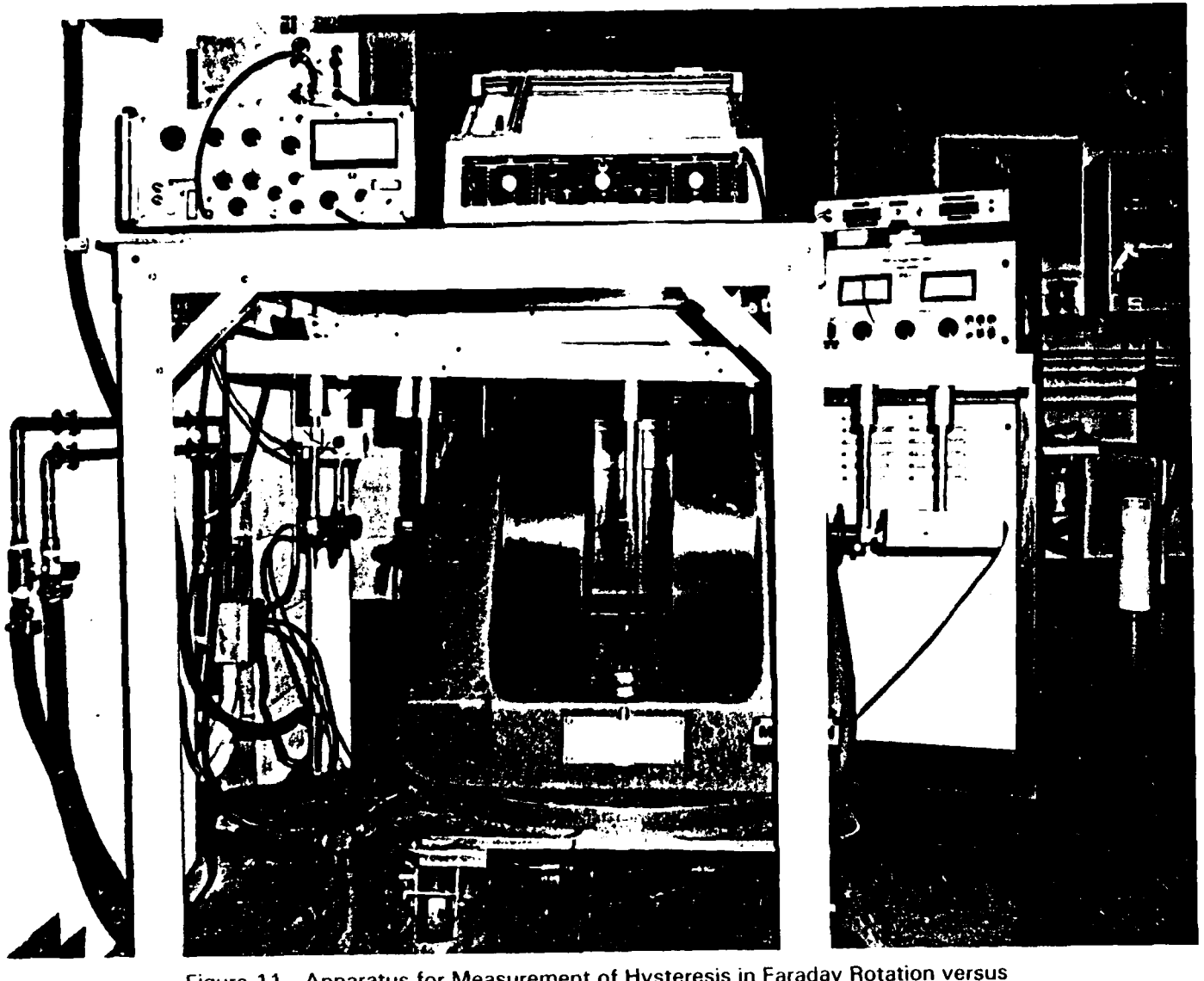

Figure 11. Apparatus for Measurement of Hysteresis in Faraday Rotation versus Magnetic Field Characteristics of TB-FE Films

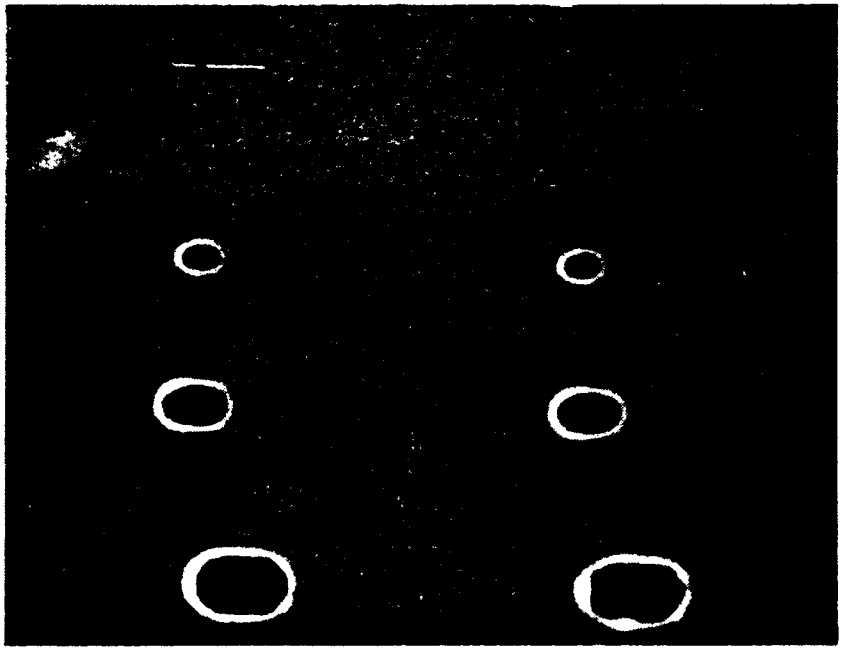

(A) Sample D310071 100Å Y_2O_3 + 1100A Carbon.

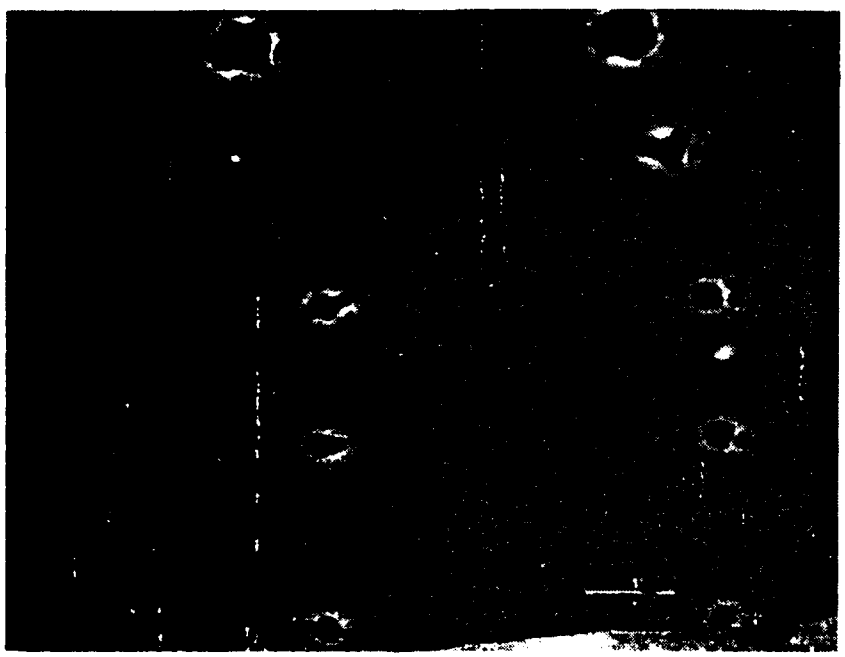

(B) Sample with Only 100Å Y_2O_3 Layer.

Figure 10. Hole Pattern in Protected TE Layers 8K Magnification. Top to Bottom Power Levels: 38, 15, 10, 8mW at 100 ns.

Samples fabricated with the 500Å Y_2O_3 buffer layer were tested. In general, these samples required prohibitively high power for writing. The samples with DLC layers > 1000Å could not be written up to powers of 38 mW. However, these samples showed very little change in reflectivity after humidity testing.

Six samples with the 100Å Y_2O_3 buffer layers were coated with 500-2000Å DLC films. In general, these samples were easy to write on compared to uncoated Te. Figure 10 a) and b) show SEM pictures of the hole patterns made with 100 ns pulses at powers of 38, 15, 10 and 8 mW. These hole patterns are sufficient for high density optical recording.

Environmental tests were not performed on these samples with 100Å buffer layers. However, it is believed that because these carbon films were of the same thickness range as that of those with 500Å Y_2O_3, which exhibited good protection, the samples with 100Å Y_2O_3 layers would have passed the Z/AD testing for the full 10 cycles.

4.2 ERASABLE MEDIA

Testing of Carbon-Coated TbFe Magneto-Optic Media Samples

Samples of TbFe media were prepared by ion beam sputter deposition. Most were overcoated with additional layers of silicon dioxide and/or carbon to assess the degree of environmental protection provided by these materials. Other samples were left uncoated for comparison. Specifically, the combinations of overcoating layer materials were 1) silicon dioxide only, 2) carbon only, and 3) silicon dioxide followed by carbon.

Initial evaluation of the TbFe alloy films was carried out by measurements of the hysteresis characteristics of the Faraday rotation versus magnetic field. The apparatus used is shown in Figures 11 and 12.

c) Results

Since no coatings were obtained with the PCVD method directly on Te, soft PPE coatings were tested. Shown in Table 2 is the transmission, reflection and absorption data. He-Ne laser (λ = 6328 Å) was used during the measurements, with the light incident on the substrate at a very small angle. We see from Table 2 that none of the samples was protected. A few maintained reflectivity, but we conclude that the soft PPE does not protect Te with the thicknesses tested.

Of the few nonreproducible hard carbon coatings produced by the CIBD method, only one sample could be tested. Sample number D302282, which had a 400Å thick carbon layer, was tested for five cycles of the Z/AD test. The resultant reflectivity at 633 nm decreased from 56 percent before test to 45 percent after test, but the transmission and absorption remained the same. This demonstrates significant moisture protection, since the reflectivity of unprotected Te layers typically decrease to values $\leq$40 percent. All of the samples in Table 2 also exhibited a large decrease in reflectivity.

TABLE 2. PERCENT TRANSMISSION, REFLECTION AND ABSORPTION OF 0.2μm PPE COATED TE AT λ = 632A, BEFORE AND AFTER THE HUMIDITY TEST

Sample	Transmission		Reflectivity		Absorption	
	Before	After	Before	After	Before	After
D206022 a	5.29	34.77	55.40	29.50	30.31	35.73
Unprotected Te	3.45	12.38	63.68	39.05	32.87	48.57
D206023 a	5.98	36.90	51.50	14.05	42.52	49.05
Unprotected Te	3.89	13.57	63.94	40.00	32.27	46.43
D206024 a	4.10	11.19	57.86	39.29	38.04	49.52
Unprotected Te	4.78	7.18	65.38	45.54	29.84	47.28
D206025 a	4.33	29.56	68.78	34.48	31.89	35.96
D206026 a	5.47	13.79	63.33	33.25	31.20	52.96
D206042	4.56	12.19	64.69	38.06	30.75	49.75
D206043	6.55	16.67	40.41	18.10	53.04	65.23
D206044	3.20	22.14	65.68	34.08	31.12	43.78
D206071	5.03	14.97	53.55	26.68	41.42	56.35
D206111	4.56	8.27	51.28	44.96	34.16	46.77
D206112	4.78	31.51	41.46	25.81	53.76	42.68
D206113	4.80	27.33	63.39	29.95	31.81	42.82
D206114	5.25	39.36	55.71	13.86	39.04	41.78
Pure Tellurium (H4)	4.34	11.35	65.30	41.84	30.36	46.81

TABLE 1. THRESHOLD WRITING POWERS

Sample	Coating	Threshold Power (mW)
Uncoated Te on Glass	None	11
D206041	0.2 μm PPE on Te	17
D210201	0.1 μm CIBD on Te	16

b) Humidity Testing

The test conditions used were essentially the same as for Z/AD environmental test (International Electrotechnical Commission, publication 68-2-38, 1974) with the exclusion of the cold subcycle. Three cycles of this test sequence are shown in Figure 9. This test is very similar to MIL-STD-810C. The Z/AD test is widely used in the optical recording industry. Protection against degradation due to humidity is achieved if the transmission and absorption do not increase, the reflectivity remains within 45-60 percent, and the write sensitivity is at 11-16 mW laser power.

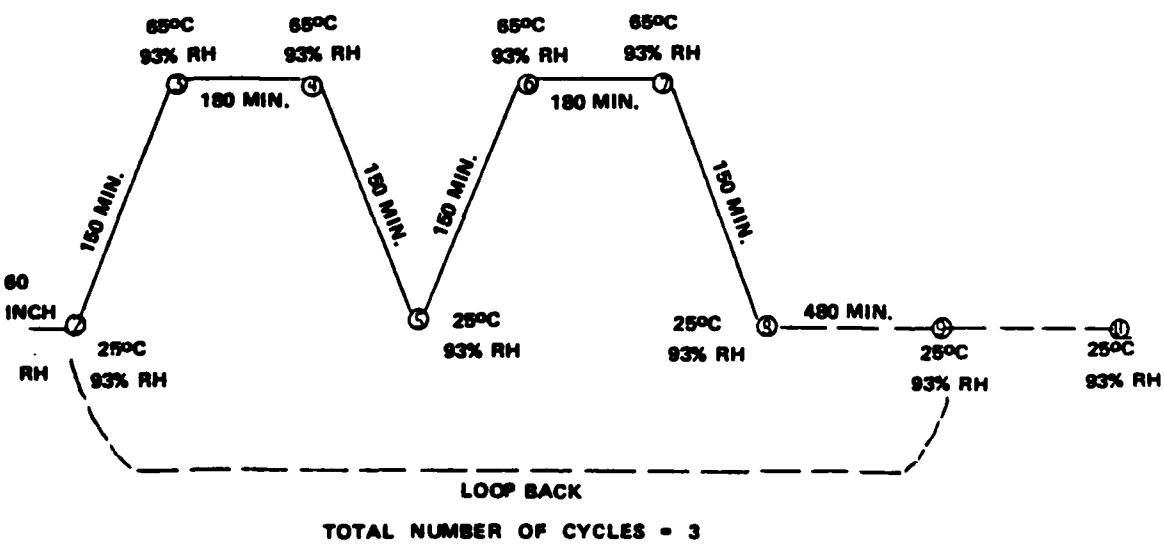

Figure 9. First Three Cycles at the Z/AD Temperature/Humidity Test

The test samples (roughly 1-inch square) were mounted in the window of a 12 inch disc. The disc was coated with roughly 50 percent (± 10 percent) reflective metal coating. The coating was removed at one spot to obtain a transparent window where the test piece can be taped (see Figures 7 and 8). The disc was rotated at 10 revolutions per second and the focused, modulated laser beam was used to burn the holes in the test sample. Typical threshold writing powers are shown in Table 1.

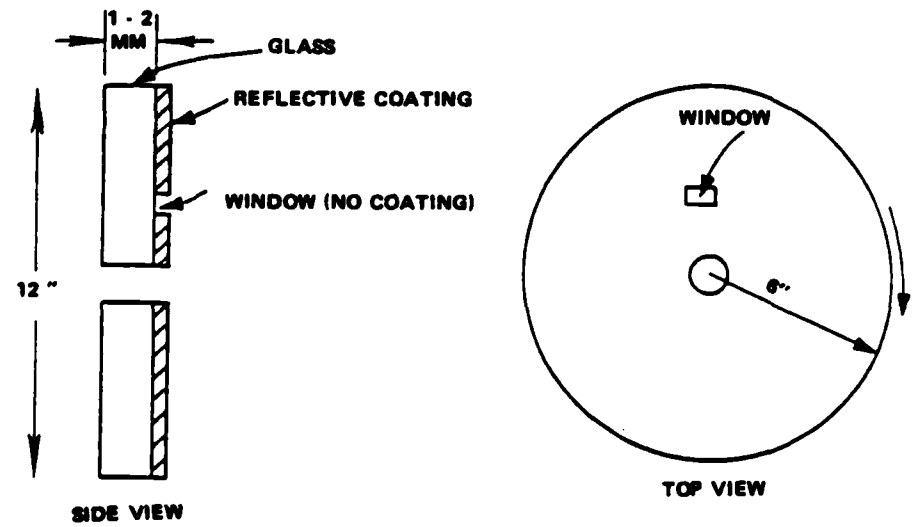

Figure 7. Twelve-Inch Test Fixture Showing Sample Mounting

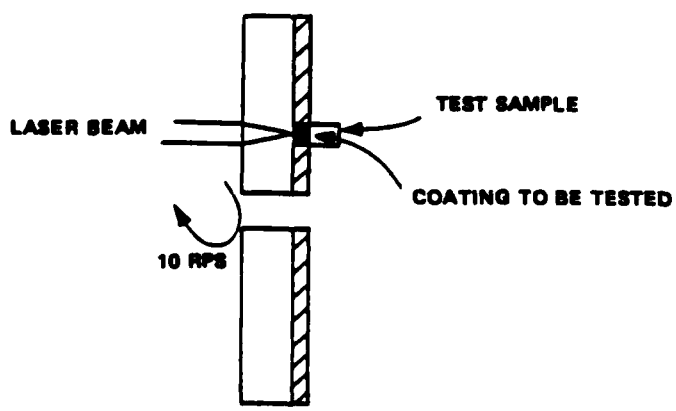

Figure 8. Coated Sample under Test

Section 4
Media Testing

4.1 WRITE ONCE MEDIA

a) Read/Write Testing

All samples tested for sensitivity of read/write characteristics were performed on the media test bed shown in Figure 6.

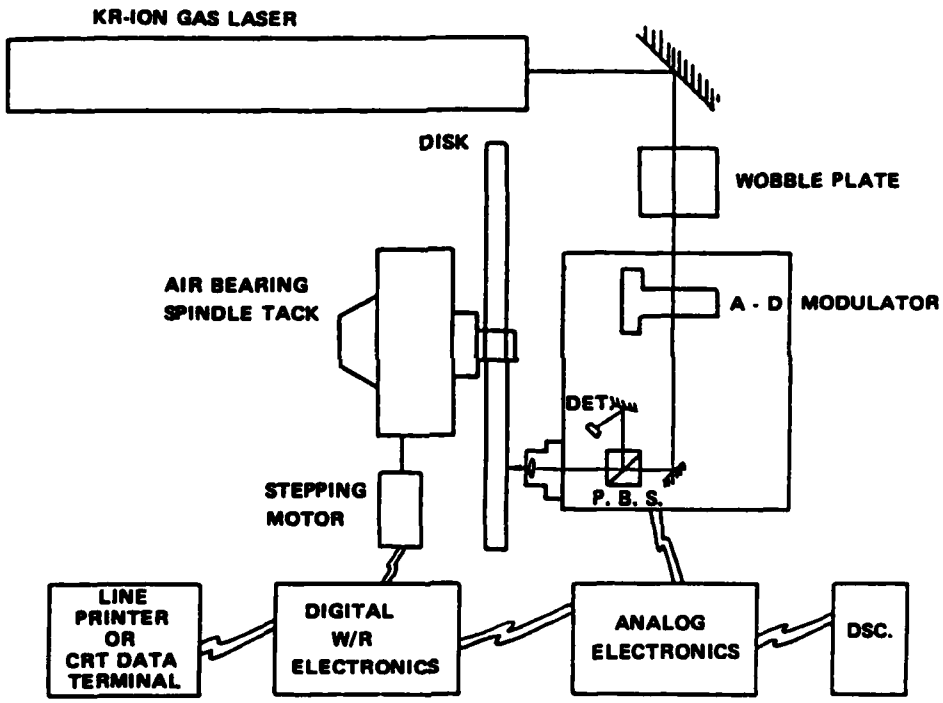

Figure 6. Media Test Bed

The testing parameters were as follows:

Laser source	Kr-ion gas laser
Laser wavelength	647 nm
Laser pulse width	100 nsec
Focusing optics	0.4 NA
Disc rotating speed	10 RPS

3.3 HARD CARBON COATINGS ON TbFe

The PCVD deposition method was used exclusively for deposition experiments on TbFe media samples. As with the Te thin films, the TbFe layers on glass were sensitive to resputtering and removal during the PCVD process. However, TbFe was not as sensitive as Te so that conditions were found that resulted in hard carbon films being deposited onto TbFe. Because of this sensitivity, no Argon presputter etch was used.

The samples were "dedusted" with ionized nitrogen gas spray and mounted on the upper electrode (Figure 4). The deposition parameters used were:

a) Gas: Ethane
b) Flow: 20 sccm
c) Pressure: 2×10^{-3} Torr
d) rf power: 600W
e) Self bias: 500V

During the course of this work, it was noted that the TbFe films degrade rapidly when exposed to the moisture present in ordinary laboratory air. Most samples were fabricated with a SiO_2 overcoat of the TbFe after deposition before exposure to air. Then, the hard carbon was deposited onto the SiO_2 coated TbFe. This combination worked well and was easy to coat with hard carbon.

Most of the films produced on Te were very thin or soft. It appears to be very difficult to produce hard carbon films on Te by the CIBD process similar to the PCVD method. Whenever ion energies required to produce hard films (values for power supplies B+D > 50) were used, the Te was removed before a coating formed. An occasional hard film was produced on Te, but this result was not very reproducible.

A filament was installed in the plasma arc to increase the discharge density. The plasma increased, but the resultant coatings were very soft. From these experiments, we conclude that with the present understanding of growth of hard carbon by both PCVD and CIBD methods, it is very difficult to produce hard carbon coatings on thin Te optical recording media. Further research into the growth kinetics of DLC is needed to understand the elimination of Te during growth.

3.2 HARD CARBON COATINGS ON TE WITH A BUFFER LAYER

In an attempt to eliminate the removal of Te during carbon deposition, we deposited layers of an oxide, Y_2O_3, onto the Te coated glass. Y_2O_3 was chosen because it is a material that we are familiar with and use frequently for a protective coating on aluminum mirrors.

The Y_2O_3 film was deposited by ion beam sputtering a Y_2O_3 pressed powder target in an oxygen atmosphere. The deposition process used is similar to that described in Section 2.2. It easily produced films on Te without any apparent damage to the Te layer. Then, a hard carbon film was deposited onto the Y_2O_3/Te layer. This process worked every time in contrast to the results noted above. Hard carbon layers varying in thickness from 900 to 3000Å were deposited by the CIBD method. Thus, the Y_2O_3 layer was successful in preventing removal of the Te that frequently occurred in the deposition of hard carbon layers previously. No attempt was made to deposit hard carbon onto Y_2O_3 coated by the PCVD method. All carbon layers were fabricated with the following voltages:

Power Supply	Volts with Respect to Ground
A	−2300
B	+90
C	−470
D	−23

The Y_2O_3 subbing or buffer layers were initially 500Å thick. However, these samples were very difficult to write holes by laser. The 100Å thick Y_2O_3 were fabricated and were successful both in protecting the Te during the carbon deposition process and maintaining good read/write sensitivity of the Te layer.

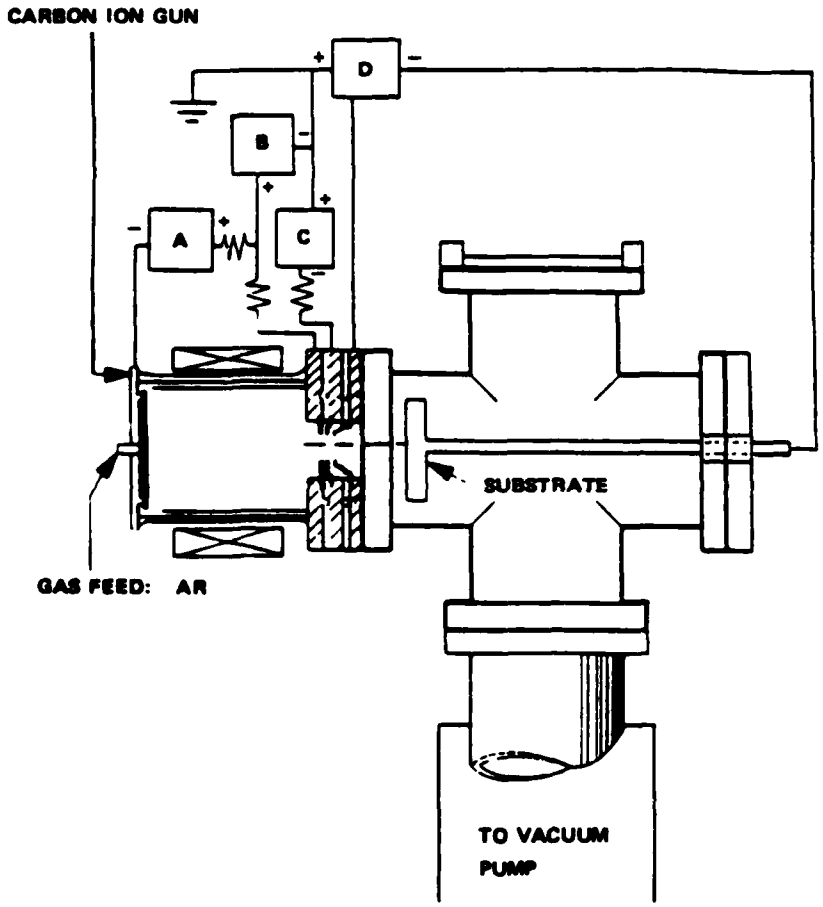

Figure 5. Carbon Ion Gun Schematic in Horizontal Configuration (Power Supplies A, B, C, and D Provide Bias to Maintain Plasma and Determine Ion Energies)

The voltage on D (substrate) was fixed at 24 volts. The absolute sum of the voltages of B and D sets the energy of the ions arriving at the substrate.

The results of the runs are shown below:

Deposition Result	Number of Runs (Oct.-Dec. 1982)	(Jan.-Dec. 1983)
Te removed in process	24	34
Only silicon substrate coated	13	0
Deposit on Te	9	34
TOTAL NUMBER OF RUNS	56	68

From several experiments, it was determined that ~2 μm thick PPE was required to protect Te from being sputtered off under the harsh conditions for depositing extremely hard carbon films. (For example: power 700W, interelectrode gap 5.5 cm, bias 600-700V, ethane flow rate 12 stand. cc/min, pressure 8×10^{-3} Torr.)

We have found that the hard carbon coatings were adherent to >2 μm thick PPE and PPE coatings were adherent to Te; carbon coatings deposited on PPE were relatively hard but not as hard as those deposited under the same conditions on hard substrates such as Si or Ge. Unfortunately, we were not able to write on Te samples protected with thick PPE and thick PPE/carbon (see Section 4). Thus, we conclude that it would be very difficult to protect Te media directly with hard carbon films prepared by the PCVD method.

3.1.2 Carbon Ion Beam Deposition (CIBD) Experiments

The direct carbon ion beam deposition ion gun was installed on the same vacuum system that contains the plasma deposition setup by replacing one of the electrodes with the carbon ion beam gun and mating flange. Operation of this gun has been described in the literature.[2,3] Coatings are obtained in a completely different way by this technique by the rf plasma method.

In the ion beam technique, carbon ions and neutrals are sputtered off a carbon electrode maintained in a dc plasma chamber and extracted by a set of apertures or grids with holes that can be adjusted so that sputter cleaning of the substrate can be obtained prior to deposition. The experimental arrangement is shown in Figure 5. The voltages required are provided by power supplies A, B, C, and D. A maintains the discharge that produces the ions, and B, C, and D extract and accelerate the ions to the substrate.

We varied these gun parameters in order to determine the optimum conditions for producing a hard carbon film on the Te coated glass. In each run, a Te coated glass and a silicon substrate were mounted on the substrate holder. The output of the ion gun was directed at this holder (Figure 5). The range of parameters studied was as follows:

Power Supply	Variation in Volts with Respect to Ground
A	−1000 to −2300
B	+40 to 200
C	−50 to −1000
D	−24

In order to make deposition conditions milder and avoid sputter etching of Te, a change was made from plasma decomposition to what is referred to as plasma polymerization of ethane. In the former case, ethane is decomposed to give mostly carbon ions, and these ions are accelerated by the plasma developed self-bias toward the hot electrode where substrates to be coated are placed. In the latter case, the substrates are placed on the grounded electrode opposite the hot electrode. Thus, the substrates are in the positive column and are not bombarded by fast ions. The ethane molecules lose some of the hydrogen atoms but not all, and the resultant ethane ions or radicals are capable of reacting with one another; i.e., polymerizing at the surface of the substrate. These specimens are not as energetic as carbon ions and there is no self-bias to accelerate them toward the electrode with substrates. Under proper conditions, the polymerization of ethane ions and radicals occurs on surfaces (e.g., on the grounded electrode where the substrates are placed) and not in the gas phase avoiding powder formation.

From previous work (DARPA contract MDA903-80-C-0098), we had developed techniques to produce plasma polymerized ethane (PPE) on glass and alkali halides. With these techniques, deposition of PPE onto tellurium coated glass slides did not remove tellurium. A series of both tellurium coated glass and plain glass samples was coated with PPE under a range of conditions:

a) Interelectrode gap: 1 to 5 cm
b) rf power: 300 to 700W
c) Pressure: 0.2 to 2.0 Torr
d) Flow rate: 5 to 50 scc/min

In no case was tellurium sputtered off. The standard tape adhesion tests showed that PPE adheres well to both glass and tellurium.

Some of the PPE coated tellurium samples were sent to Magnetic Peripherals for further testing. The results are discussed in subsection 4.1. As noted in subsection 4.1, Te coated with 0.2 μm thick PPE was successfully written on but did not survive more than three cycles of humidity testing. As a consequence, a series of experiments was performed to use the PPE layer as a buffer for a hard carbon layer.

When the standard conditions for deposition of hard carbon film were used, the tellurium layer was removed due to sputtering and delamination of the PPE layer in the plasma. Somewhat milder conditions (200W, 50V, 85 cc ethane/min) did not affect the tellurium protected with PPE, and a golden yellow soft carbon film harder than PPE was deposited. However, the adherence of PPE to tellurium was weaker in this two-layer system. Scotch tape removed both PPE and soft carbon films from tellurium.

Many unsuccessful attempts were made to deposit the hard carbon coatings from ethane gas on the tellurium coated glass slides. Typically, a 5-10 minute, mild, argon plasma etch pretreatment is used before coating to improve adhesion. This etch quickly removed the tellurium films. Then, attempts were made to deposit without this etching step. Again, the tellurium film was removed entirely within one minute exposure to ethane plasma before the carbon film formed. This could be due to several causes:

a) Thermal evaporation of the tellurium due to heating of the surface by the plasma.
b) Sputtering off of the tellurium by the carbon and hydrocarbon ions.
c) Creation of H_2Te, a volatile gas (boiling point = $-2.2°C$), from the reactive hydrogen available in the plasma.

For study of this phenomenon, a series of experiments was performed. In one, a tellurium-coated aluminum substrate was greased on the back side with a high thermal conductivity paste (Apieson grease) for good thermal contact and placed on the water-cooled electrode, creating the best possible cooling of the surface. Also, a small, thin cover glass mask was placed on the sample. The "carbon-film forming" plasma was established and maintained for only 30 seconds. This resulted in the tellurium disappearing from the unmasked area, indicating that thermal evaporation of tellurium is not the dominant effect. This conclusion is supported by another experiment in which a tellurium-coated glass slide was flipped over, placed on the non-cooled electrode and "carbon-film forming" plasma was kept on for 30 minutes without tellurium being removed. The generation of gaseous H_2Te is also not the main cause of Te removal, since tellurium is not removed in a "polymer-forming" plasma which also generates a lot of active hydrogen (see below description of PPE coating). However, this active hydrogen is less energetic than the one in the "diamond-like carbon film forming" plasma.

It seems that the most probable causes of tellurium removal were sputtering of the tellurium by the energetic carbon, hydrocarbon ions in the plasma, or electron bombardment from the plasma. This conclusion is also supported by the work of others in the area of carbon films. L. Holland and S.M. Ohja[4] reported that carbon films grown on gold films that were intended as electrodes in MIM sandwiches were thinned by sputter etching before the surface became covered by the carbon film. Anderson and Berg[5] also observed sputter etching during initial growth of carbon film and have developed a relation for the etching depth.

In order to prevent the sputter etching of the tellurium, attempts were made to sacrifice somewhat the film hardness and deposit a softer carbon coating with a higher content of hydrocarbon. This was done by lowering the rf power and the self-bias and by increasing the flow rate and the pressure of ethane gas in the system. However, even the mild conditions of 100W rf power and 50V self-bias (compared to 500-600W and 500V used to deposit extremely hard carbon films) did not prevent the removal of tellurium.

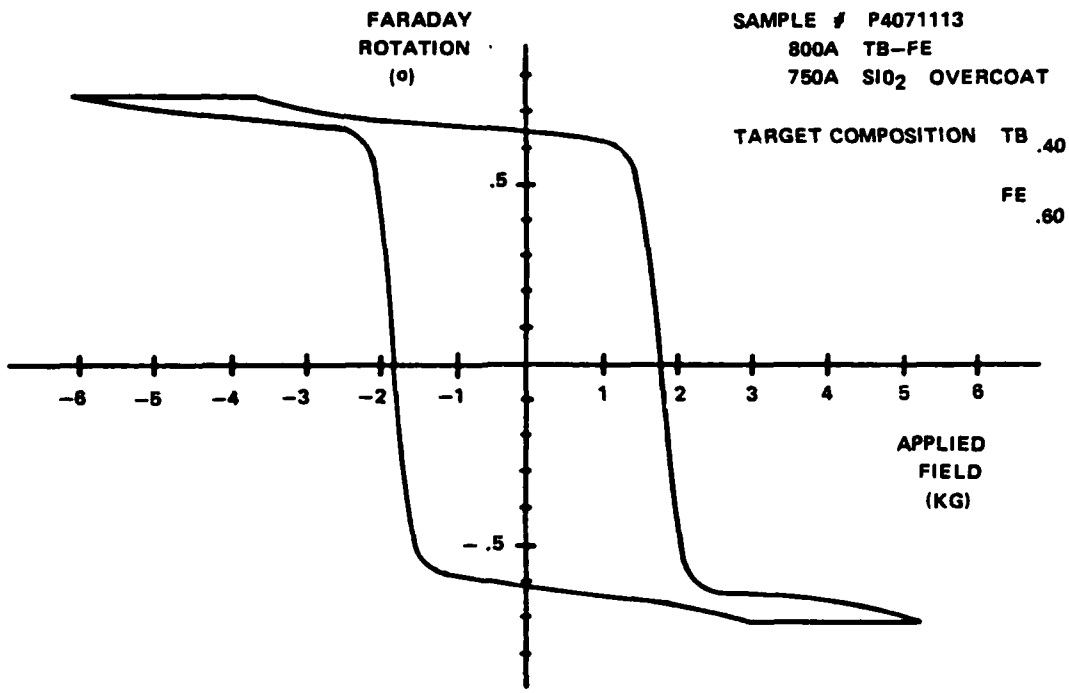

Figure 13. Typical Faraday Rotation versus Magnetic Field Characteristics of TB-FE Films

TABLE 3. RESULTS OF TEMPERATURE/HUMIDITY STRESS TEST ON TbFe MEDIA

Sample No.	SiO_2	Carbon ?	Initial		After 10 hrs. @ 70°C, 80% R.H.		Degree of Corrosion
			H_c	θ_F	H_c	θ_F	
P4071313	No	Yes	1.0kG	0.12°	1.0kG	0.10°	40%
P4071313	No	Yes	1.0kG	0.13°	1.0kG	0.12°	15%
P4070912	Yes	No	1.8kG	0.09°	2.0kG	0.17°	0%
P4070912	Yes	Yes	1.9kG	0.13°	1.9kG	>0.4°	0%

The results can be summarized as follows:

a) In the shelf storage test the bare (non-overcoated) TbFe films underwent corrosion to a degree rendering them unusable as storage media, although the remaining uncorroded area underwent little change in the magnetic or magneto-optic characteristics.
b) The silicon dioxide overcoating was enough to completely eliminate visible evidence of corrosion in both the shelf storage test and the high-humidity stress test.
c) Addition of the carbon overcoat underwent stress cracking if applied directly over the TbFe film but remained stable when applied over a silicon dioxide overcoat. The abrasion resistance of the hard carbon on SiO_2/TbFe was greater than just the SiO_2 /TbFe layers.
d) The silicon dioxide/carbon film combination also showed no evidence of corrosion during the shelf storage and high-humidity stress tests.

Section 5
Summary and Conclusions

Typically, optical recording media for laser disc recording consists of a thin film of the sensitive material on a glass or plastic substrate. These films usually degrade after exposure to moisture and lose their ability to retain the information stored in them. The goal of this program was to develop hard carbon coatings as environmentally protective coatings for these thin film optical recording media.

Two deposition methods, plasma chemical vapor deposition (PCVD) and carbon ion beam deposition (CIBD), were studied for deposition onto tellurium (Te) write once and terbium iron (TbFe) erasable media. Both methods tended to remove the sensitive media layer before the hard carbon layer could be deposited. This problem was solved by addition of an oxide layer, Y_2O_3 on Te and SiO_2 on TbFe, deposited onto the media prior to carbon film deposition. Temperature/humidity tests showed that the hard carbon layers on the oxide coated media maintained the original optical recording characteristics, while soft carbon layers did not provide such protection. Thus, this hard carbon oxide coating system was successful in providing protection of optical recording media against degradation due to moisture, which has the greatest effect on thin film optical media.

Because of the success obtained with the hard carbon protective coatings, future development of this technology should be directed towards engineering and production feasibility of the coating system. In particular, the thicknesses of the oxide and hard carbon layers should be optimized to obtain low laser write power thresholds and high signal-to-noise ratios at megabit data rates. Issues involving scaling of the coating process to coat 12- to 14-inch diameter discs should be addressed since these are typical sizes for gigabit storage systems. The next phase of this coating technology should be the demonstration of feasibility in a high speed, high data rate optical storage system.

Section 6
Acknowledgements

I would like to thank Dr. D. Schafer, Mr. P.D. Drashkovich and Mr. P. Pham for performing the depositions and evaluating the TbFe samples. Drs. Di Chen, K.M. Leung, and Mr. S. Shrawagi, of the Optical Peripherals Laboratory (MPI), fabricated the Te samples and performed the optical evaluation of these samples.

Section 7
Publications

A paper entitled, "Hard Carbon Protective Coatings for Te Based Optical Recording Media," was presented at the *OSA/SPIE Topical Meeting on Optical Data Storage*, Lake Tahoe, Nevada, January 19, 1983, and published in SPIE proceedings, Vol. 328, pp. 188-190.

Section 8
References

1. H. Vora and T.J. Moravec, *J. Appl. Phys.*, 52, 6151 (1981).
2. T.J. Moravec, *Proc. 7th ICVM*, 1982, Tokyo, Japan, pp. 379-385.
3. T.J. Moravec and T.W. Orent, *J. Vac. Sci. Technol.*, 18, 2261 (1981).
4. L. Holland and S.M. Ohja, *Thin Solid Films*, 58, 107 (1979).
5. L.P. Anderson and S. Berg, *Vacuum*, 28, 449, (1978).

MISSION
of
Rome Air Development Center

RADC plans and executes research, development, test and selected acquisition programs in support of Command, Control, Communications and Intelligence (C^3I) activities. Technical and engineering support within areas of competence is provided to ESD Program Offices (POs) and other ESD elements to perform effective acquisition of C^3I systems. The areas of technical competence include communications, command and control, battle management, information processing, surveillance sensors, intelligence data collection and handling, solid state sciences, electromagnetics, and propagation, and electronic, maintainability, and compatibility.

END