Research Note 86-05

COST AND INFORMATION EFFECTIVENESS ANALYSIS: AN IMPROVED METHODOLOGY
VOLUME II

Bryan E. Brett, William A. Chapman, and John K. Hawley
Applied Science Associates, Inc.

for

ARI FIELD UNIT AT FORT BENNING, GEORGIA
Joel D. Schendel, Acting Chief

TRAINING RESEARCH LABORATORY
Seward Smith, Acting Director

AD-A167 026

DTIC FILE COPY

DTIC ELECTE APR 25 1986 S D A

U. S. Army

Research Institute for the Behavioral and Social Sciences

January 1986

Approved for public release; distribution unlimited.

86 4 24 022

U. S. ARMY RESEARCH INSTITUTE
FOR THE BEHAVIORAL AND SOCIAL SCIENCES

A Field Operating Agency under the Jurisdiction of the
Deputy Chief of Staff for Personnel

EDGAR M. JOHNSON
Technical Director

WM. DARRYL HENDERSON
COL, IN
Commanding

Research accomplished under contract
for the Department of the Army

APPLIED SCIENCE ASSOCIATES, INC.

Justification

By
Distribution/
Availability Codes
Dist | Avail and/or Special
A-1 | 23

This report, as submitted by the contractor, has been cleared for release to Defense Technical Information Center (DTIC) to comply with regulatory requirements. It has been given no primary distribution other than to DTIC and will be available only through DTIC or other reference services such as the National Technical Information Service (NTIS). The views, opinions, and/or findings contained in this report are those of the author(s) and should not be construed as an official Department of the Army position, policy, or decision, unless so designated by other official documentation.

DISCLAIMER NOTICE

THIS DOCUMENT IS BEST QUALITY PRACTICABLE. THE COPY FURNISHED TO DTIC CONTAINED A SIGNIFICANT NUMBER OF PAGES WHICH DO NOT REPRODUCE LEGIBLY.

SECURITY CLASSIFICATION OF THIS PAGE (When Data Entered)

REPORT DOCUMENTATION PAGE		READ INSTRUCTIONS BEFORE COMPLETING FORM
1. REPORT NUMBER ARI Research Note 86-05	2. GOVT ACCESSION NO. ADA 167026	3. RECIPIENT'S CATALOG NUMBER
4. TITLE (and Subtitle) COST AND INFORMATION EFFECTIVENESS ANALYSIS: AN IMPROVED METHODOLOGY (VOLUME II)		5. TYPE OF REPORT & PERIOD COVERED Final Report Feb 1981 - June 1982 6. PERFORMING ORG. REPORT NUMBER
7. AUTHOR(s) Bryan E. Brett, William A. Chapman and John K. Hawley		8. CONTRACT OR GRANT NUMBER(s) MDA903-80-C-0212
9. PERFORMING ORGANIZATION NAME AND ADDRESS APPLIED SCIENCE ASSOCIATES, INC. Box 158 Valencia, PA 16059		10. PROGRAM ELEMENT, PROJECT, TASK AREA & WORK UNIT NUMBERS 2Q263743A794
11. CONTROLLING OFFICE NAME AND ADDRESS US Army Research Institute for the Behavioral and Social Sciences 5001 Eisenhower Ave., Alexandria, VA 22333-5600		12. REPORT DATE January 1986 13. NUMBER OF PAGES 159
14. MONITORING AGENCY NAME & ADDRESS(if different from Controlling Office) ARI Field Unit P.O. Box 2086 Ft. Benning, GA 31905		15. SECURITY CLASS. (of this report) UNCLASSIFIED 15a. DECLASSIFICATION/DOWNGRADING SCHEDULE

16. DISTRIBUTION STATEMENT (of this Report)

Approved for public release; distribution unlimited.

17. DISTRIBUTION STATEMENT (of the abstract entered in Block 20, if different from Report)

18. SUPPLEMENTARY NOTES

Seward Smith, Contracting Officer's Representative

19. KEY WORDS (Continue on reverse side if necessary and identify by block number)

Combat Engineer Vehicle (CEV)
Training Device
Performance Assessment
Information Worth
Information Utility
Cost-Benefit Analysis
Multiattribute Utility Measurement

20. ABSTRACT (Continue on reverse side if necessary and identify by block number)

This report is the second of two volumes that present results of an effort to develop an improved methodology for the conduct of Cost and Information Effectiveness Analysis (CIEA). CIEA is a methodology for the evaluation of training device performance assessment capabilities (D-PACs). It is directed at the problem of determining when the worth of performance status information available from a D-PAC offsets the costs required to develop, operate, and maintain the capability.
(Cont'd)

DD FORM 1 JAN 73 1473 EDITION OF 1 NOV 65 IS OBSOLETE

UNCLASSIFIED

SECURITY CLASSIFICATION OF THIS PAGE (When Data Entered)

ARI Research Note 86-05

20. continued

This report presents a case study which illustrates application of CIEA to evaluate a series of D-PAC alternatives that provide performance status information on the gunnery proficiency of crews for the Combat Engineer Vehicle (CEV). CEV gunnery D-PAC alternatives were developed by combining members of a set of interactive video gunnery trainers for the CEV with different types of live fire exercises. The case study describes activities conducted in the four phases of the CIEA of CEV gunnery D-PACs: exploration of the D-PAC concept for CEV gunnery, development of the D-PAC concept for CEV gunnery, definition of the CEV gunnery D-PAC alternatives, and evaluation of CEV gunnery D-PAC alternatives. Activities of the last phase culminate with specification of the most cost-effective CEV gunnery D-PAC alternative.

TABLE OF CONTENTS

APPENDIX A. HIERARCHICAL ROLLBACK PROCEDURES FOR DERIVING NORMALIZED UTILITY AND IMPORTANCE SCORES

APPENDIX B. RESULTS OF CEV GUNNERY FRONT-END ANALYSIS (FEA)

APPENDIX C. OPERATIONAL SEQUENCE DIAGRAMS FOR CEV GUNNERY

APPENDIX D. D-PAC COSTING GUIDE

APPENDIX A

HIERARCHICAL ROLLBACK PROCEDURES FOR DERIVING NORMALIZED UTILITY AND IMPORTANCE SCORES

This appendix describes how utility values or importance weights are derived for items organized hierarchically. Figure A-1 illustrates the process for a hierarchy of hypothetical tasks, subtasks and skills. In Figure A-1, the ultimate objective is to compute a set of normalized utility scores for the skills. Utility scores will be derived based on ratings provided by SMEs. In CIEA, ratings are obtained using a rank and rate method in which SMEs first rank items in terms of utility or importance and then assign ratings that reflect the distance between items. Thus, the procedure calls for comparisons between items. When the number of items to be rated is large (greater than 10) it is difficult for SMEs to make comparisons between items. A hierarchy is used to organize the items into small groups within which comparison is relatively easy.

When a hierarchy is employed, the derivation of utilities requires that items in each level of the hierarchy be ranked and rated. The ratings at each level are scaled and the scaled values are "rolled back" through the hierarchy to yield utility scores for the terminal items in the hierarchy (skills in Figure A-1). Referring to Figure A-1, the normalized scores for the skills were derived by first rating items in each level of the hierarchy using a 0-100 scale. Next, the rated values were divided by 100. Then, values were multiplied across (or down) the hierarchy of tasks, subtasks, and skills until there was a single value for each skill. When all the skill values were determined, the set of all skill values was normalized by totaling the set of values and dividing each value by the total.

An alternative to the above process would be to normalize items at a given level to 1.0 and roll the normalized values through the hierarchy. The same normalized utility scores of the skills would result, but the summing of uncorrected utility scores and dividing each uncorrected score by the sum to yield a normalized score would not be required. Derivation of normalized scores at each level of the hierarchy would require that the ratings of a

set of items be summed and the rating of each item be divided by the resulting sum.† The sum of the normalized scores of a set of items would be one. When the normalized values of items are rolled back through the hierarchy, the resulting utility scores of the skills will sum to 1.0 also. Either procedure is equally effective. Choice of a procedure depends on user preference.

†Note: When items are not organized hierarchically (e.g., there is less than 10 items) this same procedure is used to derive normalized scores. That is, the ratings are summed and the rating of each item is divided by the sum.

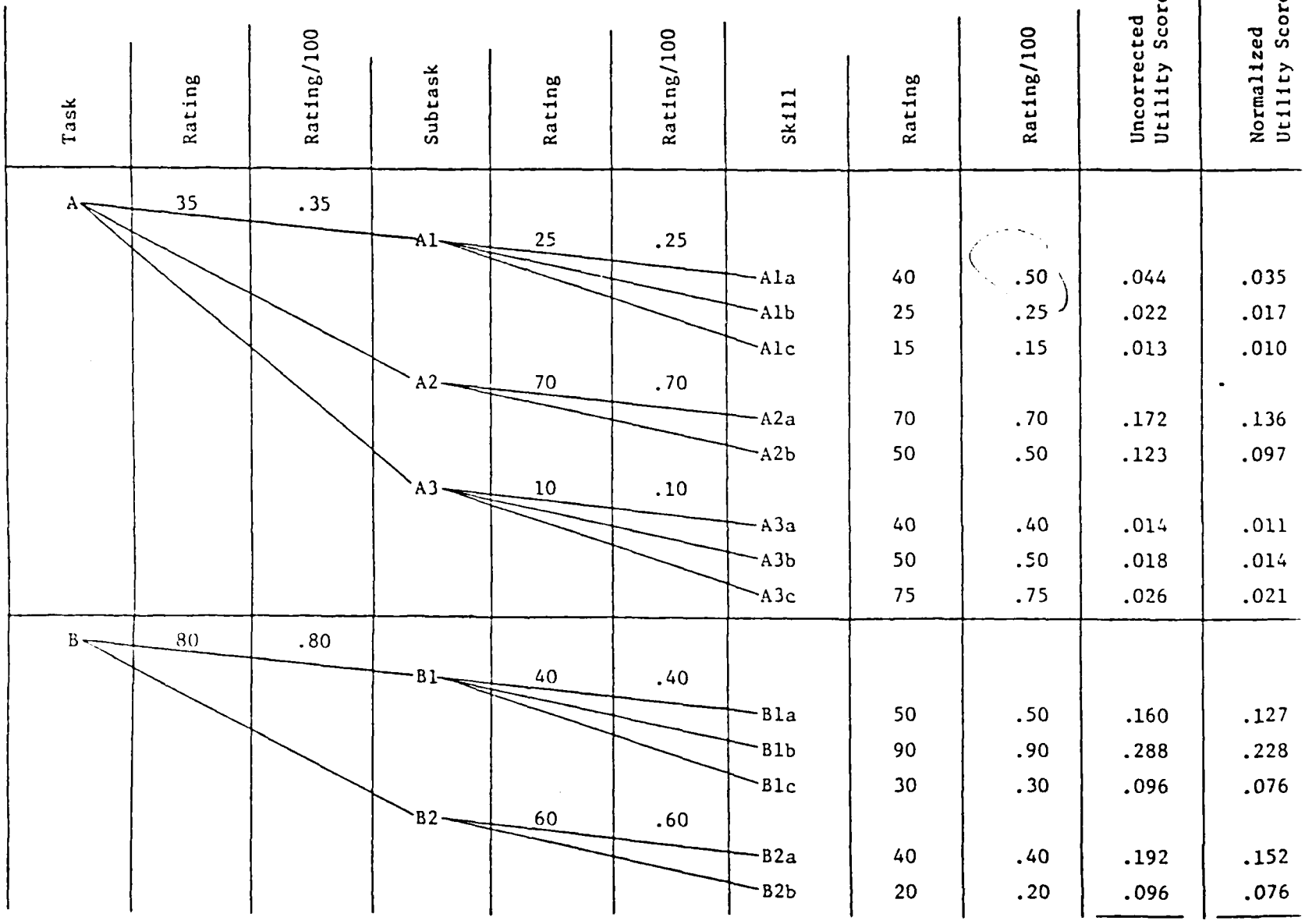

Task	Rating	Rating/100	Subtask	Rating	Rating/100	Skill	Rating	Rating/100	Uncorrected Utility Score	Normalized Utility Score
A	35	.35								
			A1	25	.25					
						A1a	40	.50	.044	.035
						A1b	25	.25	.022	.017
						A1c	15	.15	.013	.010
			A2	70	.70					
						A2a	70	.70	.172	.136
						A2b	50	.50	.123	.097
			A3	10	.10					
						A3a	40	.40	.014	.011
						A3b	50	.50	.018	.014
						A3c	75	.75	.026	.021
B	80	.80								
			B1	40	.40					
						B1a	50	.50	.160	.127
						B1b	90	.90	.288	.228
						B1c	30	.30	.096	.076
			B2	60	.60					
						B2a	40	.40	.192	.152
						B2b	20	.20	.096	.076
							Total		1.264	1.000

Figure A-1

APPENDIX B

RESULTS OF CEV GUNNERY FRONT-END ANALYSIS (FEA)

CEV GUNNERY TASKS

Item	Task #	Title
		CLUSTER 0. PERFORM PREPARE TO FIRE CHECKS
		SL 1
1.	C1001	Perform Driver prefire checks
2.	C1002	Perform Loader prefire checks
3.	C1002A	Perform Loader prefire checks for main gun
		SL 2
4.	C2001	Perform Gunner prefire checks
5.	C2002	Boresight the 7.62mm coax machine gun M-73
6.	C2003	Boresight the 7.62mm coax machine gun M-240
7.	C2004	Align the infinity sight with 7.62mm coax machine gun
8.	C2005	Zero the 7.62mm coax machine gun
9.	C2006	Boresight the 165mm M-235 main gun
		SL 3
10.	C3001	Perform tank commander (TC) prefire checks
11.	C3001A	Perform tank command (TC) prefire checks for main gun
12.	C3002	Boresight the caliber .50 M-85 machine gun
13.	C3003	Zero the caliber .50 M-85 machine gun
		CLUSTER 1. PERFORM AMMUNITION HANDLING
		SL 1
14.	C1101	Perform Loader misfire procedures for main gun
15.	C1102	Load/stow 165mm main gun ammunition
16.	C1103	Load the M-135 main gun
17.	C1104	Load/stow basic load ammunition
18.	C1105	Load the 7.62mm coax machine gun M-240
19.	C1106	Load the 7-62mm coax machine gun M-73
20.	C1107	Apply immediate action to reduce a stoppage in the 7.62mm coax machine gun
		SL 2
21.	C2101	Perform Gunner misfire procedures for main gun
		SL 3
22.	C3101	Load the caliber .50 M-85 machine gun
23.	C3102	Correct a stoppage of the caliber .50 M-85 machine gun using immediate action
		CLUSTER 2. OCCUPY FIRING POSITIONS
		SL 1
24.	C1201	Move into firing positions
		SL 2
25.	C2201	Prepare a circular range card
		SL 3
26.	C3201	Prepare range cards
27.	C3202	Select firing positions
28.	C3203	Direct movement into a firing position

CEV GUNNERY TASKS (Cont'd)

Item	Task #	Title
		CLUSTER 3. ENGAGE TARGETS
		SL 1
29.	C1301	Respond to a firing command as Loader or driver
30.	C1302	Detect and identify targets
31.	C1303	Operate CEV during 7.62mm coax machine gun target engagement
32.	C1304	Engage targets with 7.62mm coax machine gun as loader
		SL 2
33.	C2301	Respond to a firing command as Gunner
34.	C2302	Engage targets during limited visibility as Gunner
35.	C2303	Illuminate targets with searchlight as Gunner
36.	C2304	Determine target range
37.	C2305	Engage stationary targets with main gun using burst-on-target (BOT)
38.	C2306	Engage targets with main gun using rapid sequential round as Gunner
39.	C2307	Engage targets with 7.62mm coax machine gun as Gunner
		SL 3
40.	C3301	Issue a firing command
41.	C3302	Engage targets during limited visibility as TC
42.	C3303	Illuminate targets with search light as TC
43.	C3304	Engage targets with main gun using rapid sequential round as TC
44.	C3305	Engage ground targets with caliber .50 M-85 machine gun
45.	C3306	Engage aerial targets with caliber .50 M-85 machine gun
46.	C3307	Engage targets with 7.62mm coax machine gun as TC

12F CEV GUNNERY SKILL LIST

001 Recall location and function of switches, controls, and indicators.

002 Perform engine start and stop procedures.

003 Recall proper cleaning procedures for optical equipment.

004 Recall procedures for maintaining proper recoil oil fluid level.

005 Recall armament systems damage criteria.

006 Operate breechblock operating handle.

007 Recall ammunition serviceability criteria.

008 Recall that radios must be switched to OFF during engine start.

009 Recall firing circuit test procedures.

010 Recall ammunition safety cautions and warnings.

011 Recall main gun boresighting procedures.

012 Recall stowage location of fire control equipment.

013 Recall gun control check procedures.

014 Operate fire control equipment.

015 Install/dismount and stow direct fire sighting equipment.

016 Recall misfire procedures.

017 Recall that turret lock must be in locked position before removing/ stowing ammunition in hull storage.

018 Recall that main gun should not be elevated above 178 miles (10 degrees) during loading.

019 Recall procedure for installing/removing inner and outer rounds in 165mm ready rack.

020 Drive CEV in daylight or dark.

021 Use military symbols.

022 Recall the four elements required to plat a target on a range card.

023 Identify potential targets.

024 Determine target azimuth.

025 Use binoculars and WORM formula to estimate range.

026 Recall that best source of range is a tank mounted range finder.

027 Determine quadrant elevation from Firing Table FT-165-A1.

028 Recall that range cards must be prepared for primary, alternate and supplemental firing positions.

029 Use map symbols.

030 Recall CEV capabilities and limitations.

031 Recall site selection criteria for CEV.

032 Recall that dangerous targets may require immediate engagement without regard to firing positions.

033 Use arm and hand signals to direct vehicle movement.

034 Recall elements of a fire command.

035 Operate CEV intercom system.

036 Operate main gun controls.

037 Recall best method of destruction for target types.

038 Recall techniques for target detection.

039 Recall that CEV's mounting searchlights do not fire while illuminating because of smoke and dust obscuration.

040 Recall that CEV's with searchlight mounted should not fire because of possible muzzle blast damage to searchlight.

041 Recall techniques for searchlight employment.

042 Recall that search light must not be used in overdrive more than once every five minutes.

043 Use appropriate sighting equipment for Black light.

044 Recall that CEV should move to alternate position as soon as possible.

12F CEV GUNNERY SKILL LIST (Cont'd)

045 Operate external radio communications.

046 Estimate 100 meter range using football field method.

047 Recall criteria for size of range correction in subsequent fire commands (25 meters for measured range, 50 meters for estimated range, doubled if miss is over 100 meters).

048 Recall boresighting procedure for Cal .50 machine gun.

049 Recall loading procedures for 7.62mm machine gun.

050 Recall loading procedures for Cal .50 machine gun.

051 Recall assembly/disassembly procedures for the Cal .50 M-85 machine gun.

052 Recall target engagement techniques for machine gun engagements.

053 Recall boresighting procedures for the 7.62mm coax machine gun.

JOB DATA WORKSHEET
(TRADOC Pam 350-30)

Page 1 of ___ Page

DATE

JOB TITLE: 12 F

DOS: Employ CEV Gunnery Tasks

DUTY CODE: O. Perform Prepare to fire checks

LEVEL: SL1

ITEM CODE	16. TASK, ELEMENTS J.P.M.	17. INITIATING CUES	18. CONDITIONS	19. STANDARDS	20. NOTES
C1001	Perform driver prefire checks	Combat or training firing mission ordered. TC announces "PREPARE TO FIRE"	As the driver in a CEV crew. In a stationary CEV. During daylight. Prior to initiating combat mission or training firing. Supervision available. TM 9-2350-222-10-1 Present	All checks completed in coordination with other crew members, within 5 minutes.	001 Recall location and function of switches, controls and indicators
1.	Clean periscopes				002 Perform engine start and stop procedures
2.	Lower seat				
3.	Close hatch				003 Recall proper cleaning procedures for optical equipment.
4.	Position Master Battery switch to ON				
5.	Start engine				
6.	Report "Driver Ready" to TC				
7.	Turn Engine OFF when ALL crew checks have been completed.				

B-7

FB Form 1159c (USAADS) 21 Mar 80

Previous editions of this form are obsolete.

30-1393-B3 AFPP-FB

JOB DATA WORKSHEET
(TRADOC Pam 350-30)

Page 2 of 1

DATE

JOB TITLE 12 F

DOS CEV Gunnery Tasks

DUTY CODE 0. Perform Prepare to Fire Checks

LEVEL SL1

ITEM CODE	16. TASK, ELEMENTS J.P.M.	17. INITIATING CUES	18. CONDITIONS	19. STANDARDS	20. NOTES
C1002	Perform Loader prefire checks	Combat or training firing mission ordered.	As loader in a CEV crew During daylight, prior to initiating combat mission or training firing.	All checks completed in coordination with other crew members within 5 minutes.	001 Recall location an functions of switches, controls, and indicato
1.	Read the replenisher indicator tape and service as required	TC announces "PREPARE TO FIRE".			004 Recall procedures maintaining proper rec oil fluid level.
2.	Inspect main gun tube		Supervision available TM 9-2350-222-10-1 is available	All cautions and warnings observes.	
3.	Check 7.62mm MG mount				005 Recall armament sy damage criteria.
4.	Inspect all turret stowed ammunition for proper stowage, complete load and serviceability				006 Operate breechbloc operating handle.
5.	On TC's command, install/ remove firing circuit tester				007 Recall ammunition serviceability criteri
6.	Assist in testing, firing circuit for main gun and 7.62mm MG				009 Recall firing circ test procedures.
7.	On TC's command, assist in testing gun controls				010 Recall ammunition safety cautions and wa ings
8.	Inspect all hull stowed ammunition for proper stowage, complete load and serviceability after coordinating with gunner to insure turret is locked				011 Recall main gun bo sighting procedures 012 Recall stowage loc tion

FB Form 1159c (USAADS) 21 Mar 80

Previous editions of this form are obsolete.

30-1393-B3 AFP

JOB DATA WORKSHEET
(TRADOC Pam 350-30)

DATE

JOB TITLE: 12 F

DOS: CEV Gunnery Tasks

DUTY CODE: O. Perform Prepare to Fire Checks

LEVEL: SL1

ITEM CODE	16. TASK, ELEMENTS J.P.M.	17. INITIATING CUES	18. CONDITIONS	19. STANDARDS	20. NOTES
C1002	9. Assist gunner in boresighting main gun				of fire control equipment
	10. Install, remove, and stow breech boresight				013 Recall gun control check procedures
	11. Load 7.62mm MG if required				017 Recall that turret lock must be in locked position before removing/ stowing ammunition in hull storage
	12. Report "LOADER READY" to TC				049 Recall loading procedures for 7.62mm MG
					C1105 Load the 7.62mm MG M-240
					C1106 Load the 7.62mm MG M-73

FB Form 1159c (USAADS) 21 Mar 80

Previous editions of this form are obsolete.

30-1393-B3 AFPP-FBT

JOB DATA WORKSHEET
(TRADOC Pam 350-30)

Page 3 of ___

DATE

JOB TITLE 12F

DOS CEV GUNNERY TASKS

DUTY CODE

LEVEL

ITEM CODE	16. TASK, ELEMENTS J.P.M.	17. INITIATING CUES	18. CONDITIONS	19. STANDARDS	20. NOTES
C1002A	Perform Loader prefire checks for main gun.	Combat or training firing mission ordered	As the Loader in a CEV crew	All checks completed in coordination with other	001 Recall location a function of switch,
1.	Read the replenisher indicator tape and service as required	TC announces "PREPARE TO FIRE"	In a stationary CEV During daylight or night Prior to initiating combat	crew members within 5 minutes.	controls, and indicat 004 Recall procedures
2.	Inspect main gun tube and chamber, check breech spring tension		Mission or training firing Supervision available TM 9-2350-222-10-1 is available	Observe safety warnings	maintaining proper re oil fluid level 005 Recall armament s tems damage criteria
3.	Inspect ammunition for condition, proper stowage, and complete load				006 Operate breechbloc operating handle
4.	On TC's command, install/ remove firing circuit tester				007 Recall ammunition serviceability criter
5.	Assist in testing firing circuit				009 Recall firing circ test procedures
6.	Assist in checking gun controls				010 Recall ammunition safety warnings and ca tions
7.	On TC's command, assist Gunner in boresighting main gun				011 Recall maingun bor sighting procedures
8.	Install, remove, and stow breech boresight				012 Recall stowage loc of fire control equipm
9.	Report "LOADER READY" to TC.				013 Recall gun control check procedures

FB Form 1159c (USAADS) 21 Mar 80

Previous editions of this form are obsolete.

30-1393-B3 APP

B-10

JOB DATA WORKSHEET
(TRADOC Pam 350-30)

DATE

JOB TITLE: 12F

DOS: CEV Gunnery Tasks

DUTY CODE: 0. Perform Prepare to Fire Checks

LEVEL: SL2

ITEM CODE	16. TASK, ELEMENTS J.P.M.	17. INITIATING CUES	18. CONDITIONS	19. STANDARDS	20. NOTES
C2001	Prepare Gunner Prefire Checks	Combat or training firing mission ordered TC announces "PREPARE TO FIRE"	As the Gunner in a CEV crew, in a stationary CEV During daylight or night Prior to initiating combat or training firing Supervision available TM 9-2350-222-10-1 is present	All checks completed in coordination with other crew members within 5 minutes Observe safety warnings	001 Recall location a function of switches, controls, and indicat 003 Recall proper cle procedures for optica equipment 009 Recall firing cir test procedures 013 Recall gun contro check procedures 014 Operate fire cont equipment 011 Recall maingun bo sighting procedures 015 Install/dismount and stow direct fire sighting equipment C2006 Boresight the 165mm M-135 maingun
1.	Observe Loader's check of replenisher indicator tape				
2.	Install, clean and inspect direct fire sights				
3.	Check operation of ballistic shield				
4.	Check instrument light and control				
5.	On TC's command, test firing control circuit in coordination with TC and Loader				
6.	On TC's command, check gun controls, power pack, oil level and equilibrator hydraulic fluid level, in coordination with Loader				
7.	Check azimuth indicator for accuracy				
8.	Check elevation quadrant				
9.	Boresight maingun, periscope and telescope in coordination with Loader				

FB Form 1159c (USAADS) 21 Mar 80

Previous editions of this form are obsolete.

30-1393-B3 AF

JOB DATA WORKSHEET
(TRADOC Pam 350-30)

DATE

JOB TITLE	DOS
12F	CEV Gunnery Tasks
DUTY CODE	**LEVEL**
O. Perform Prepare to Fire Checks	SL2

ITEM CODE	16. TASK, ELEMENTS J.P.M.	17. INITIATING CUES	18. CONDITIONS	19. STANDARDS	20. NOTES
C2001 10.	Report "GUNNER READY" to TC				

FB Form 1159c (USAADS) 21 Mar 80

Previous editions of this form are obsolete.

30-1393-B3 AFPI

(TRADOC Pam 350-30)

DATE

JOB TITLE	DOS
12F	CEV Gunnery Tasks
DUTY CODE	LEVEL
O. Perform Prepare to Fire Checks	SL2

ITEM CODE	16. TASK, ELEMENTS J.P.M.	17. INITIATING CUES	18. CONDITIONS	19. STANDARDS	20. NOTES
C2002	Boresight the 7.62mm Coax M.G. M-73	TC directs after maingun is boresighted	As Gunner in a CEV crew, in a CEV, with 7.62mm MG (M-73) mounted and sighting equipment present in daylight	An accurate relationship between the gunner's sight reticle, and the 7.62mm gun bore is established at a 600 meter aiming point	001 Recall location a function of switches, controls, and indicat
1.	Lay boresight maingun on the aiming point				012 Recall stowage lo of fire control equir
2.	Set elevation/traverse power switch to OFF and verify that gun is unloaded and safety in "S" (safe) position		Vehicle is parked on level terrain, maingun has been boresighted		014 Operate fire cont equipment
3.	Loosen three set screws on outside collar		A distinct aiming point approximately 600 meters away is clearly visible		015 Install/dismount stow direct fire sigh equipment
4.	Remove electrical lead from receiver and remove receiver from jacket assembly		Necessary tools and M17A1 binoculars are available		053 Recall boresighti procedures for the 7. coax machine gun
5.	Loosen mounting screws, jam and locking nuts for vertical and horizontal adjustments		Assistance is available		
6.	Focus on aiming point with right side of M17A1 binoculars through bore and align bore with aiming point				
7.	Tighten mounting screws, locking and jam nuts, and reassemble receiver. Reconstruct electrical lead				
8.	Tighten collar set screws				

FB Form 1159c (USAADS) 21 Mar 80

Previous editions of this form are obsolete

30 1393-B3 ATI

JOB DATA WORKSHEET
(TRADOC Pam 350-30)

Page 5a of ___

DATE

JOB TITLE	DOS
12F	CEV Gunnery Tasks
DUTY CODE	LEVEL
O. Perform Prepare to Fire Checks	SL2

ITEM CODE	16. TASK, ELEMENTS J.P.M.	17. INITIATING CUES	18. CONDITIONS	19. STANDARDS	20. NOTES
C2002					
9.	Stow tools and equipment				

FB Form 1159c (USAADS) 21 Mar 80

Previous editions of this form are obsolete.

30-1393-B3 AFF

JOB DATA WORKSHEET
(TRADOC Pam 350-30)

DATE

JOB TITLE	DOS
12F	CEV Gunnery Tasks
DUTY CODE	**LEVEL**
O. Perform Prepare to Fire Checks	SL2

ITEM CODE	16. TASK, ELEMENTS J.P.M.	17. INITIATING CUES	18. CONDITIONS	19. STANDARDS	20. NOTES
C2003	Boresight the 7.62mm coax M.G. M-240	TC directs after maingun is boresighted	As Gunner in a CEV Crew, in a CEV, with 7.62mm MG (M-240) mounted and sighting equipment present in daylight vehicle is parked on level terrain, maingun has been boresighted. A distinct aimint point approximately 600 meters away is clearly visible. Necessary tools and M17A1 binoculars are available. Assistance is available	An accurate relationship between gunner's sight reticle and the 7.62mm MG bore is established at a 600 meter aiming point	001 Recall location an function of switches, controls and indicator
1.	Lay boresighted maingun on the aiming point				012 Recall stowage loc of fire control equipm
2.	Set elevation/traverse power switch to OFF and verify that gun is unloaded, bolt is forward				014 Operate fire contr equipment
3.	Remove buffer, driver spring, mounting pin, slide rod and bolt assembly				015 Install/dismount a stow direct fire sight equipment
4.	Loosen mounting nut and tighten to 1/3 turn past touching washer				053 Recall boresightin procedures for the 7.6 coax machine gun
5.	Focus on aiming point with sight side of M17A1 binoculars through bore and align bore with aiming point				
6.	Tighten mounting nut and recheck bore alignment				
7.	Reassemble machine gun				
8.	Return bolt to forward position				
9.	Stow tools and equipment				

FB Form 1159c (USAADS) 21 Mar 80

Previous editions of this form are obsolete.

30-1393-B3 AFP2

JOB DATA WORKSHEET
(TRADOC Pam 350-30)

DATE

JOB TITLE: 12F

DOS: CEV Gunnery Tasks

DUTY CODE: O. Perform Prepare to Fire Checks

LEVEL: SL2

ITEM CODE	16. TASK, ELEMENTS J.P.M.	17. INITIATING CUES	18. CONDITIONS	19. STANDARDS	20. NOTES
C2004	Align infinity sight with 7.62mm coax M.G.	7.62mm coax MG (M-73 or M-240) has been boresighted	As Gunner in a CEV crew in a CEV with 7.62mm MG mounted and boresighted, sighting equipment installed vehicle parked on level terrain, in daylight with gun layed on a 500 meter aiming point which is clearly visible	An accurate relationship is established between the infinity sight and the 7.62mm coax MG bore at a 500 meter aiming point	001 Recall location a function of switches, controls and indicate
1.	7.62mm M.G. has been boresighted and is layed on the aiming point				012 Recall stowage lo of fire control equip
2.	Set master battery switch and infinity control toggle switch to ON and adjust infinity reticle brightness				015 Install/dismount stow direct fire sigh equipment
3.	Adjust infinity reticle in elevation and azimuth to align reticle with aiming point				053 Recall boresighti procedures for the 7. coax machine gun
4.	Set infinity control toggle switch and master battery power switch to OFF				
					C2002 Boresight 7.62m MG (M-73)
					C2003 Boresight 7.62m MG (M-240)

FB Form 1159c (USAADS) 21 Mar 80

Previous editions of this form are obsolete.

30-1393-B3 AFI

JOB DATA WORKSHEET
(TRADOC Pam 350-30)

DATE

JOB TITLE: 12F

DOS: CEV Gunnery Tasks

DUTY CODE: O. Perform Prepare to Fire Checks

LEVEL: SL2

ITEM CODE	16. TASK, ELEMENTS J.P.M.	17. INITIATING CUES	18. CONDITIONS	19. STANDARDS	20. NOTES
C2005	Zero the 7.62mm coax M.G.	Zeroing has been directed	As Gunner in a CEV crew,	Adjust the center of	001 Recall location ar
			in a CEV, parked on level	burst to fall within the	function of switches,
1.	Lay gun on 600 meter aiming		terrain, in daylight.	infinity sight picture of	controls and indicato:
	point using M32C periscope		7.62mm coax MG is mounted	a 600 meter aiming point	
			and boresighted with 100		010 Recall ammunition
2.	Adjust light intensity of		rounds available		safety cautions and w.
	infinity sight reticle		A clearly defined target		ings
			approximately 600 meters		
3.	Load and charge the gun and		away has bee designated		012 Recall stowage loc
	fire a 20 to 25 round burst				of fire control equip:
4.	Without disturbing gun lay,				014 Operate fire cont:
	use infinity sight boresight				equipment
	knobs to center strike area				
	in the reticle				015 Install/dismount :
					stow direct fire sight
5.	Relay gun to aiming point and				equipment
	fire another 20-25 round				
	burst				049 Recall loading pr
					cedures for 7.62mm mac
6.	Repeat process until center				gun
	of burst is inside sight				
	reticle				053 Recall boresightir
					procedures for the 7.(
					coax machine gun
					C2002 Boresight the 7.
					MG (M-73)
					C2003 Boresight the 7.
					MG (M-240)

B-17

FB Form 1159c (USAADS) 21 Mar 80

Previous editions of this form are obsolete.

30-1393-B3 AFP

JOB DATA WORKSHEET
(TRADOC Pam 350-30)

Page 8a of ___

DATE

JOB TITLE: 12F

DOS: CEV Gunnery Tasks

DUTY CODE: O. Perform Prepare to Fire Checks

LEVEL: SL 2

ITEM CODE	16. TASK, ELEMENTS J.P.M.	17. INITIATING CUES	18. CONDITIONS	19. STANDARDS	20. NOTES
C2005					C2004 Align the infi sight

FB Form 1159c (USAADS) 21 Mar 80

Previous editions of this form are obsolete.

30-1393-B3 AFI

B-18

JOB DATA WORKSHEET
(TRADOC Pam 350-30)

DATE

JOB TITLE 12F

DOS CEV Gunnery Tasks

DUTY CODE 0. Perform Prepare to Fire Checks

LEVEL SL2

ITEM CODE	16. TASK, ELEMENTS J.P.M.	17. INITIATING CUES	18. CONDITIONS	19. STANDARDS	20. NOTES
C200o	Boresight the 165mm M-135 maingun	Prepare to fire drill is under way	As Gunner in CEV crew, in a CEV preparing for combat or for a firing exercise vehicle parked on level terrain, sighting equipment is installed A distinct aiming point, approximately 600 meters away is visible	An accurate relationship between the gunner's sight reticles and the maingun bore is established at a 600 meter aiming point	001 Recall location function of switches controls and indicat 011 Recall maingun b sighting procedures 012 Recall stowage l tion of fire control equipment
1.	Set elevation/traverse power switch and maingun switch to OFF, and master battery switch to ON. Unlock turret traverse lock. Depress gun manually to remove excess play				
2.	Direct loader to secure boresight cord over muzzle witness lines with tape		Breech boresight, boresight cord, tape and M17A1 binoculars are available		014 Operate fire con equipment
3.	Lock breech open and install breech boresight		Assistance is available		015 Install/dismount stow direct fire sig equipment
4.	Align bore with right angle corner of target using manual elevation and traverse		Adjust M32C only in darkness to prevent light damage		
5.	Select HEP reticle in 105F telescope and adjust telescope reticle to aiming point and verify bore on aiming point				
6.	Install and adjust visible light body reticle for M32C. Adjust only in darkness				

B-19

FB Form 1159c (USAADS) 21 Mar 80

Previous editions of this form are obsolete.

30-1393-83 A1

JOB DATA WORKSHEET
(TRADOC Pam 350-30)

DATE

JOB TITLE 12F

DOS CEV Gunnery Tasks

DUTY CODE 0. Perform Prepare to Fire Checks

LEVEL SL2

ITEM CODE	16. TASK, ELEMENTS J.P.M.	17. INITIATING CUES	18. CONDITIONS	19. STANDARDS	20. NOTES
C3001	Perform Tank Commander (TC) Prefire Checks	Combat or training firing mission is ordered	As the TC in a CEV crew in a stationary CEV	All checks completed in coordination with other	001 Recall location a function of switches,
			During daylight or night	crew members, within 5	controls and indicato
1.	Command "PREPARE TO FIRE"		Prior to initiating com-	minutes (boresighting takes	
			bat or training firing	additional time)	003 Recall proper cle
2.	Switch radios to OFF during			Observe safety warnings	ing procedures for op
	engine start		TM 9-2350-222-10-1 is		cal equipment
			present	Supervise completion of	
3.	Clean turret exterior lens			other crew members' checks	008 Recall that radio
	and vision devices				must be switched to O
					during engine start
4.	Check M34 or M36 periscope				
					009 Recall firing cir
5.	Command "CHECK FIRING				test procedures
	SWITCHES"				
					013 Recall gun contro
6.	Test firing control circuit				check procedures
	in coordination with loader				
	and gunner				048 Recall boresighti
					procedures for Cal.50
7.	Command "CHECK GUN CONTROLS"				machine gun
8.	Check gun controls for power				050 Recall loading pr
	elevation and traverse				cedures for Cal.50
					machine gun
9.	Command "CHECK FIRE CONTROL"				
					C3002 Boresight the
10.	Check operation of Cal.50				Cal.50 M85 MG
	MG mount and controls				
11.	Check firing operation of				
	Cal.50 MG				

FB Form 1159c (USAADS) 21 Mar 80

Previous editions of this form are obsolete.

30-1393-B3 AFI

JOB DATA WORKSHEET
(TRADOC Pam 350-30)

JOB TITLE	12F	DOS	CEV Gunnery Tasks
DUTY CODE	0. Perform Prepare to Fire Checks	LEVEL	

ITEM CODE	16. TASK, ELEMENTS J.P.M.	17. INITIATING CUES	18. CONDITIONS	19. STANDARDS	20
C3001	12. Boresight Cal.50 MG				
	13. Load Cal.50 MG if required				
	14. Supervise crew performance and coordination of checks				
	15. Command "REPORT" to crew and receive reports				

FD Form 1159c (USAADS) 21 Mar 80

B-2

JOB DATA WORKSHEET
(TRADOC Pam 350-30)

DATE

JOB TITLE: 12F

DOS: CEV Gunnery Tasks

DUTY CODE: O. Perform Prepare to Fire Checks

LEVEL: SL2

ITEM CODE	16. TASK, ELEMENTS J.P.M.	17. INITIATING CUES	18. CONDITIONS	19. STANDARDS	20. NOTES
C3OJIA	Perform Tank Commander (TC) Prefire Checks for maingun	Combat or training firing mission is ordered	As the TC in a CEV crew in a stationary CEV During daylight or night Prior to initiating combat or training firing	All checks completed in coordination with other crew members, within 5 minutes (boresighting takes additional time) Observe safety,warnings	001 Recall location an function of switches, controls and indicator
1.	Command "PREPARE TO FIRE"				
2.	Clean turret exterior lens and vision devices				003 Recall proper clea ing procedures for opt cal equipment
3.	Check M34 or M36 periscope		TM 9-2350-222-10-1 is present	Supervise completion of other crew members' checks	009 Recall firing circ test procedures
4.	Command "CHECK FIRING SWITCHES"				013 Recall gun control check procedures
5.	Test firing control circuit in coordination with loader and gunner				
6.	Command "CHECK GUN CONTROLS"				
7.	Check Gun controls for power elevation and traverse				
8.	Supervise crew performance and coordination of checks				
9.	Command "REPORT" to crew				
10.	Receive reports				

FB Form 1159c (USAADS) 21 Mar 80

Previous editions of this form are obsolete.

30-1393-B3 AFPP-

JOB DATA WORKSHEET
(TRADOC Pam 350-30)

DATE

JOB TITLE: 12F

DOS: CEV Gunnery Tasks

DUTY CODE: 0. Perform Prepare to Fire Checks

LEVEL: SL3

ITEM CODE	16. TASK, ELEMENTS J.P.M.	17. INITIATING CUES	18. CONDITIONS	19. STANDARDS	20. NOTES
C3002	Boresight the cal .50 M-85 MG	Cal .50 MG is being installed, combat or training firing mission is ordered, or prepare to fire drill is being performed	As TC in a CEV crew in a CEV with M85 MG mounted, and sighting equipment present, in daylight vehicle is parked on level terrain A distinct aiming point, approximately 500 meters away, has been identified	An accurate relationship is established between the M85 bore and the M34 and M36 sight reticles at a 500 meter aiming point	001 Recall location a function of switches, controls and indicato 012 Recall stowage lo tion of fire control equipment 014 Operate fire con equipment 015 Install/dismount stow direct fire sigi equipment 048 Recall boresight procedure for Cal .5(machine gun 051 Recall assembly/ disassembly procedur the Cal .50 M85 machi gun
1.	Remove periscope body				
2.	Place MG in "S" (safe) position and insure that gun is unloaded				
3.	Remove back plate, buffer group, sear assembly, and bolt assembly				
4.	Align the center of the barrel with aiming point by manually traversing the cupola and release the azimuth lock				
5.	Install the M34 periscope and adjust elevation and traverse until 500 meter aiming point is aligned with aiming point. Rotate slip scale on elevation and deflection knobs to read 4 and4				
6.	Remove M34 and install M36 periscope				
7.	Adjust elevation and traverse until 500 meter aiming point is aligned with aiming point. Rotate slip scales on elevation knobs to read 4 and 4				

FB Form 1159c (USAADS) 21 Mar 80

Previous editions of this form are obsolete.

30-1393-B3 APP

R-33

JOB DATA WORKSHEET
(TRADOC Pam 350-30)

DATE

JOB TITLE: 12F

DOS: CEV Gunnery Tasks

DUTY CODE: O. Perform Prepare to Fire Checks

LEVEL: SL3

ITEM CODE	16. TASK, ELEMENTS J.P.M.	17. INITIATING CUES	18. CONDITIONS	19. STANDARDS	20. NOTES
C3002					
8.	Remove M36 body				
9.	Reassemble bolt assembly, sear assembly, buffer group and back plate				
10.	Install desired periscope body				

JOB DATA WORKSHEET
(TRADOC Pam 350-30)

DATE

JOB TITLE: 12F

DOS: CEV Gunnery Tasks

DUTY CODE: O. Perform Prepare to Fire Checks

LEVEL: SL3

ITEM CODE	16. TASK, ELEMENTS J.P.M.	17. INITIATING CUES	18. CONDITIONS	19. STANDARDS	20. NOTES
C3003	Zero the cal .50 M-85 MG	Zeroing has been directed	As TC in a CEV crew, in a CEV with M85 mounted and boresighted 100 rounds ammunition available, parked on level terrain, in daylight 500 meter target has been designated	Adjust burst to 500 meter aiming point for both periscopes	001 Recall location a function of switches, controls, and indicat
1.	Use M34 or M36 periscope sight to lay gun on 500 meter aiming point by traversing and elevating cupola				010 Recall ammunition safety cautions and w ings
2.	Load and charge the MG and fire a 10 to 20 round burst				012 Recall stowage lo of fire control equip
3.	Check lay of the gun after firing and readjust to aiming point if necessary				014 Operate fire cont equipment
4.	Without moving gun lay, adjust periscope deflection and elevation until 500 meter aiming point is at center of burst strike area				015 Install/dismount stow direct fire sigh equipment
5.	Fire another 10 to 20 round burst to confirm zero				048 Recall boresighti procedure for cal .50 machine gun
6.	Repeat procedure for other periscope				050 Recall loading pr cedures for cal .50 machine gun
7.	Verify nonballistic reticle aiming point of M36 IR periscope by firing a burst at same target at dusk or with search light illumination				C3002 Boresight the c .50 M85 MG C3102 Load the cal .5 M85 MG

B-15

FB Form 1159c (USAADS) 21 Mar 80

Previous editions of this form are obsolete.

30-1393-B3 AFF

JOB DATA WORKSHEET
(TRADOC Pam 350-30)

DATE

JOB TITLE: 12F

DOS: CEV Gunnery Tasks

DUTY CODE: 1. Perform Ammunition Handling

LEVEL: SL1

ITEM CODE	16. TASK, ELEMENTS J.P.M.	17. INITIATING CUES	18. CONDITIONS	19. STANDARDS	20. NOTES
C1101	Perform loader misfire procedures for maingun	Round fails to fire after both TC and gunner control handle triggers, manual elevation firing button, and the manual firing handle have been operated	In a CEV during a fire mission with maingun loaded As loader Supervision is available	*Performance measures* accomplished in sequence, without error, from memory, in a safe manner Action completed, or vehicle evacuated within 4 minutes of last attempt to fire for at least 2 hours Unfired round is placed a safe distance from all personnel	006 Operate breechblo operating handle 010 Recall ammunitio safety cautions and ings 016 Recall misfire p cedures
1.	Wait 2 minutes after last attempt to fire				
2.	Open breechblock and unload round				
3.	If weapon is too hot to unload, wait additional 2 minutes and unload round, close breech				
4.	If still too hot to unload, inform TC				
5.	Evacuate CEV on order, close breech				
6.	If round does not "cook off", re-enter CEV after gun has cooled and unload round				
7.	Remove round from vehicle and place a safe distance from all personnel				

B-16

FB Form 1159c (USAADS) 21 Mar 80

Previous editions of this form are obsolete.

30-1393-B3 AFP

JOB DATA WORKSHEET
(TRADOC Pam 350-30)

DATE

JOB TITLE
12F

DOS
CEV Gunnery Tasks

DUTY CODE
1. Perform Ammunition Handling

LEVEL
SL1

ITEM CODE	16. TASK, ELEMENTS J.P.M.	17. INITIATING CUES	18. CONDITIONS	19. STANDARDS	20. NOTES
C1102	Load/stow 165mm maingun ammunition	Ammunition supply/resupply is delivered	As a CEV crew member given a CEV and 165mm ammunition,	Rounds stowed in ready rack and/or tubular stowage rack and secured so	007 Recall ammunition serviceability criteria
1.	Install inner rounds in ready rack	TC directs loading	All weather, day or night, in or out of combat	as not to fall or bounce	010 Recall ammunition safety cautions and warnings
2.	Secure inner rounds			Rounds are removed from stowage with out losing control of rounds or allowing them to fall over	017 Recall that turret lock must be in the locked position before removing/stowing ammunition in hull stowage
3.	Install outer rounds in ready rack				
4.	Secure outer rounds			All safety cautions and warnings observed	
5.	Remove outer rounds from ready rack				019 Recall procedure for installing/removing inner and outer rounds in 165 ready rack
6.	Remove inner rounds from ready rack				
7.	Install and secure rounds in the tubular stowage rack				020 Recall procedures for installing/removing rounds from 165mm tubular stowage rack
8.	Remove rounds from the tubular stowage rack				

B-27

FB Form 1159c (USAADS) 21 Mar 80

Previous editions of this form are obsolete.

30-1393-B3 AFPP-F

JOB DATA WORKSHEET
(TRADOC Pam 350-30)

DATE

JOB TITLE: 12F

DOS: CEV Gunnery Tasks

DUTY CODE: 1. Perform Ammunition Handling

LEVEL: SL1

ITEM CODE	16. TASK, ELEMENTS J.P.M.	17. INITIATING CUES	18. CONDITIONS	19. STANDARDS	20. NOTES
C1103	Load the M-135 maingun	Upon order of the TC or gunner	As the loader in a CEV crew, given a CEV with ammunition stowed Daylight or Dark, under all weather conditions, in combat or during training firing	Round is loaded and properly seated, without violation of safety restrictions, within 5 seconds	006 Operate breechbloc operating handle
1.	Set maingun safety switch to SAFE				010 Recall ammunition safety cautions and w ings
2.	Open breechblock fully, and check that chamber is empty and free of debris after each round				011 Recall misfire pr cedures
3.	Return operating handle to locked position				017 Recall that turret lock must be in locke position before remov stowing ammunition fr hull storage
4.	Remove round from ready rack, place projectile on breech-block rollers, insert and seat round				018 Recall that gun s not be elevated above Mils (10 degrees) dur loading
5.	Detach and remove the handle from the round				019 Recall procedures installing/removing in and outer rounds in lf ready rack
6.	Close the breechblock				
7.	Return maingun safety switch to FIRE, and remain clear of the recoil path				
8.	Announce "UP"				C1101 Perform misfire cedures for maingun
					C1102 Load/stow 165mm gun ammunition

FB Form 1159c (USAADS) 21 Mar 80

Previous editions of this form are obsolete.

30-1393-B3 AFP

B-28

JOB DATA WORKSHEET
(TRADOC Pam 350-30)

DATE

JOB TITLE: 12F

DOS: CEV Gunnery Tasks

DUTY CODE: 1. Perform Ammunition Handling

LEVEL: SL1

ITEM CODE	16. TASK, ELEMENTS J.P.M.	17. INITIATING CUES	18. CONDITIONS	19. STANDARDS	20. NOTES
C1104	Load/stow basic load ammuni-	Preparation for combat is underway, basic load ammunition is issued	As a crew member in a CEV crew in a CEV preparing for combat	All ammunition is correctly stowed	007 Recall ammunitio serviceability crite
1.	Stow maingun ammunition				
2.	Stow 7.62mm ammunition in turret wall and floor			Safety cautions and warning are observed without error or commission	010 Recall ammunitio safety cautions and warnings
3.	Stow Cal.50 ammunition in turret floor				017 Recall that turr lock must be in lock position before re stowing ammunition i hull storage
4.	Stow Cal.45 ammunition in individual turret storage compartments				
5.	Stow hand grenades				019 Recall procedure installing/removing and outer rounds in ready rack
6.	Insure that all ammunition is properly secured				
					020 Drive CEV in day or dark
					C0012 Load/stow 165m maingun ammunition

FB Form 1159c (USAADS) 21 Mar 80

Previous editions of this form are obsolete

30-1393-B3 AFI

JOB DATA WORKSHEET
(TRADOC Pam 350-30)

DATE

JOB TITLE: 12F

DOS: CEV Gunnery Tasks

DUTY CODE: 1. Perform Ammunition Handling

LEVEL: SL1

ITEM CODE	16. TASK, ELEMENTS J.P.M.	17. INITIATING CUES	18. CONDITIONS	19. STANDARDS	20. NOTES
C1105	Load the 7.62mm coax MG (M-240)	Fire mission is eminent or Prepare to fire drill is underway	As loader in a CEV crew, in a CEV, 7.62mm coax MG (M-240) is mounted ammunition is available	Ammunition is correctly loaded so as not to cause malfunction or damage to gun	001 Recall location a function of switches, controls and indicato
1.	Turret traverse lock is set to LOCK, ELEV/TRAV POWER to OFF, machine gun switch to OFF and safety to F (fire)			Link loops face down when ammunition is fed through the ammunition box chute	007 Recall ammunition serviceability criter
2.	Pull charger handle to rear and set safety to S (safe)			All caution and warnings are observed	010 Recall ammunition safety cautions and warnings
3.	Raise cover and feed tray and check that chamber is clear. Lower feed tray				049 Recall loading pr cedures for 7.62mm machine gun
4.	Feed ammunition belt through chute, place first round in feed tray with open side of link down and push against cartridge stop				
5.	Close and latch cover, and check that latches are locked				

FB Form 1159c (USAADS) 21 Mar 80

Previous editions of this form are obsolete.

30-1393-B3 AFPP

B-10

JOB DATA WORKSHEET
(TRADOC Pam 350-30)

DATE

JOB TITLE: 12F

DOS: CEV Gunnery Tasks

DUTY CODE: 1. Perform Ammunition Handling

LEVEL: SL1

ITEM CODE	16. TASK, ELEMENTS J.P.M.	17. INITIATING CUES	18. CONDITIONS	19. STANDARDS	20. NOTES
C1106	Load the 7.62mm coax MG (M-73)	Fire mission is eminent or Prepare to fire drill is underway	As loader in a CEV crew, in a CEV, 7.62mm coax MG (M-73) is mounted ammunition is available	Ammunition is correctly loaded so as not to cause malfunction or damage to gun	001 Recall location and function of switches, controls and indicators
1.	Turret traverse lock is set to LOCK, ELEV/TRAV POWER switch to OFF, and machine gun switch to OFF			Link loops face down when ammunition is fed through the ammunition box chute	007 Recall ammunition serviceability criteria
2.	Set safety to F (fire) and pull charging handle to rear			Weapon must be charged prior to opening receiver cover	010 Recall ammunition safety cautions and warnings
3.	Raise receiver cover and feed tray			All cautions and warnings are observed	049 Recall loading procedures for 7.62mm mach gun
4.	Check that barrel extension is back and chamber is clear, then lower feed tray				
5.	Feed ammunition belt through chute, place first round in feed tray with open side of link down with first round over slot in feed tray				
6.	Close cover and check that cover latch rod is forward				

JOB DATA WORKSHEET
(TRADOC Pam 350-30)

Page 20 of ___ Pag
DATE

JOB TITLE	DOS
12F	CEV Gunnery Tasks
DUTY CODE	LEVEL
1. Perform Ammunition Handling	SL1

ITEM CODE	16. TASK, ELEMENTS J.P.M.	17. INITIATING CUES	18. CONDITIONS	19. STANDARDS	20. NOTES
C1107	Apply immediate action to reduce a stoppage in the 7.62mm MG	Round fails to fire while firing the 7.62mm coax MG	As loader in a CEV crew in a Cev, while firing the 7.62mm coax MG, a stoppage occurs	Within 10 seconds, apply immediate action and re-engage target	001 Recall location and function of switches, controls, and indicator
1.	For a cold gun! Wait 5 seconds			All safety warnings and cautions are observed	010 Recall ammunition safety cautions and warings
2.	Pull back charging handle and press trigger				016 Recall misfire procedures
3.	If gun stops again, wait 5 seconds and unload, set safety to "F", pull charger handle to rear, and let charger handle go forward slowly while pressing trigger				C1105 Load the 7.62mm coax MG (M-240)
4.	Load gun and try to fire manually. If gun stops again, wait 5 seconds, unload and troubleshoot gun				C1106 Load the 7.62mm coax MG (M-73)
5.	For a hot gun: wait 5 seconds Pull back charger handle, and press trigger.				
6.	If gun stops again, wait 5 seconds and unload with 5 seconds				
7.	If gun cannot be unloaded within 5 seconds, pull charging handle to the rear, close cover, and				

FE Form 1159- (USAADS) [illegible]

Previous editions of this form are obsolete

[illegible] AFPR

JOB DATA WORKSHEET
(TRADOC Pam 350-30)

Page 20a of ___ Pag

DATE

JOB TITLE 12F	DOS CEV Gunnery Tasks
DUTY CODE 1. Perform Ammunition Handling	LEVEL SL1

ITEM CODE	16. TASK, ELEMENTS J.P.M.	17. INITIATING CUES	18. CONDITIONS	19. STANDARDS	20. NOTES
C1107	Keep gun pointed at target for 15 minutes, to cool				

FB Form 1159c (USAADS) 21 Mar 80 Previous editions of this form are obsolete 20 1203 D2 AFPP

JOB DATA WORKSHEET
(TRADOC Pam 350-30)

DATE

JOB TITLE 12F

DOS CEV Gunnery Tasks

DUTY CODE 1. Perform Ammunition Handling

LEVEL SL2

ITEM CODE	16. TASK, ELEMENTS J.P.M.	17. INITIATING CUES	18. CONDITIONS	19. STANDARDS	20. NOTES
C2101	Perform gunner misfire procedures for maingun	Round fails to fire during a fire mission	As Gunner in a CEV During a fire mission with maingun loaded	Performance measures accomplished in sequence without error, from memory in a safe manner	001 Recall location function of switches controls and indicat
			Supervision is available		010 Recall ammunitic safety cautions and warnings
1.	Announce "MISFIRE"			Actions accomplished on a vehicle evacuated within 4 minutes of last attempt to fire for at least two hours	
2.	Keep muzzle trained on target				016 Recall misfire p cedures
3.	Keep personnel clear of muzzle and recoil path				
4.	Attempt to fire by operating in sequence gunner and TC hand control trigger, manual elevation firing button and the manual firing handle			Unfired round is removed from vehicle and placed a safe distance from all personnel	
5.	Wait 2 minutes after last attempt to fire, and then direct loader to unload round				
6.	If the weapon is too hot to unload, close breech, wait 2 more minutes, then direct loader to try to unload again				
7.	If still too hot, close breech, inform TC and evacuate CEV on order for two hours, or until gun is cooled				
8.	If round does not "cook off" and after weapon has cooled,				

B-13

FB Form 1159c (USAADS) 21 Mar 80

Previous editions of this form are obsolete.

30-1393-B3 AF

JOB DATA WORKSHEET
(TRADOC Pam 350-30)

DATE

JOB TITLE 12F	DOS CEV Gunnery Tasks
DUTY CODE 1. Perform Ammunition Handling	LEVEL SL2

ITEM CODE	16. TASK, ELEMENTS J.P.M.	17. INITIATING CUES	18. CONDITIONS	19. STANDARDS	20. NOTES
C2101	have loader re-enter CEV and unload round (as directed by TC)				
9.	Direct loader to place unfired round a safe distance from vehicle and all personnel (as directed by TC)				
10.	Insure that round location is properly marked, and EOD is notified for disposal of the round (as directed by TC)				

FB Form 1159c (USAADS) 21 Mar 80

Previous editions of this form are obsolete.

30-1393-83 A

JOB DATA WORKSHEET
(TRADOC Pam 350-30)

DATE

JOB TITLE	DOS
12F	CEV Gunnery Tasks
DUTY CODE	LEVEL
1. Perform Ammunition Handling	SL3

ITEM CODE	16. TASK, ELEMENTS J.P.M.	17. INITIATING CUES	18. CONDITIONS	19. STANDARDS	20. NOTES
C3101	Load the cal .50 M-85 MG	Fire missions eminent or prepare to fire drill is	As TC in a CEV crew, in a CEV	Ammunition is correctly loaded so as not to cause	001 Recall location an function of switches, controls and indicator
1.	Raise cradle acess door and cover assembly and latch open	underway	M-85 is mounted, ammunition is available	malfunction or damage to gun	
					007 Recall ammunition
2.	With bolt in rear position, check that chamber is empty			Safety warning and cautions are observed	serviceability criteri
					010 Recall ammunition
3.	Close bolt slowly				safety cautions and wa ings
4.	Place ammunition in feed box and feed 3 or 4 rounds into flexible chute				050 Recall loading pro cedures for cal .50 machine gun
5.	Feed rounds through flexible chute and place lead round on tray with open side of links down				
6.	Close cover assembly				
7.	Operate charger handle to recharge the gun				
8.	Place safety in "S" (safe) position				

JOB DATA WORKSHEET
(TRADOC Pam 350-30)

DATE

JOB TITLE: 12F

DOS: CEV Gunnery Tasks

DUTY CODE: 1. Perform Ammunition Handling

LEVEL: SL3

ITEM CODE	16. TASK, ELEMENTS J.P.M.	17. INITIATING CUES	18. CONDITIONS	19. STANDARDS	20. NOTES
C3102	Correct a stoppage of the cal .50 M-85 MG using immediate action	Round fails to fire while firing M-85 MG	As TC in a CEV crew in a CEV, while firing cal .50 M-85 MG, a stoppage occurs	Within 10 seconds, apply immediate action and re-engage target	001 Recall location and function of switches, controls and indicators
1.	Keep weapon trained on target if weapon is cold;			All safety warnings and precautions are observed	010 Recall ammunition safety cautions and warnings
2.	Wait 5 seconds for possible hangfire				016 Recall misfire procedures
3.	Retract bolt and press trigger				
4.	If weapon fails to fire, wait another 5 seconds and retract bolt				
5.	Open cover assembly and remove ammunition				
6.	Determine cause of stoppage, correct, reload, and continue engagement				
7.	If weapon is hot, wait 5 seconds for possible hangfire				
8.	Retract the bolt and press trigger				
9.	If gun does not fire, open cover assembly and unload				

FB Form 1159c (USAADS) 21 Mar 80

Previous editions of this form are obsolete.

30-1393-B3 AFPP-F

JOB DATA WORKSHEET
(TRADOC Pam 350-30)

Page 23a of ___ Pa
DATE

JOB TITLE	DOS
12F	CEV Gunnery Tasks
DUTY CODE	LEVEL
1. Perform Ammunition Handling	SL3

ITEM CODE	16. TASK, ELEMENTS J.P.M.	17. INITIATING CUES	18. CONDITIONS	19. STANDARDS	20. NOTES
C3102	ammunition within 5 seconds				
10.	If gun cannot be unloaded within 5 seconds, let bolt go forward, close cover, and wait 15 minutes before re-loading				
11.	If second stoppage occurs after clearing, repeat clearing procedures				
12.	If a third stoppage occurs, wait 5 seconds, unload gun and troubleshoot gun				

B-18

FB Form 1159c (USAADS) 21 Mar 80 Previous editions of this form are obsolete. 30-1393-B3 AFPP

JOB DATA WORKSHEET
(TRADOC Pam 350-30)

DATE

JOB TITLE: 12F

DOS: CEV Gunnery Tasks

DUTY CODE: 2. Occupy Firing Positions

LEVEL: SL1

ITEM CODE	16. TASK, ELEMENTS J.P.M.	17. INITIATING CUES	18. CONDITIONS	19. STANDARDS	20. NOTES
C1201	Move into Firing Positions	TC designates firing position	As driver in a CEV crew, given a CEV	Operates vehicle safely	001 Recall location and functions of switches, controls and indicators
1.	Drive a CEV in Daylight		Daylight or dark, under all weather conditions	follows most direct route to firing position	
2.	Drive a CEV at night		in combat, or firing exercises	Maintains steady speed	
				Avoids obstacles.	002 Perform engine start and stop procedures
3.	Follow the best route to designated firing position			Minimizes direction changes	
				Stops vehicle smoothly at designated position.	020 Drive CEV in daylight or dark
4.	Select a hull down position			Selected position is hull down, where possible	
				vehicle is stopped on most level ground available	
5.	Stop vehicle on most level ground available				

JOB DATA WORKSHEET
(TRADOC Pam 350-30)

DATE

JOB TITLE: 12F

DOS: CEV Gunnery Tasks

DUTY CODE: 2. Occupy Firing Positions

LEVEL: SL2

ITEM CODE	16. TASK, ELEMENTS J.P.M.	17. INITIATING CUES	18. CONDITIONS	19. STANDARDS	20. NOTES
C2201	Prepare circular range card	Firing position is selected/occupied	As Gunner in a CEV Given a circular range card (Card, Tank Range 8724207), pencil and straight edge, binoculars, during daylight, in combat or during training or firing exercises	Target identification, range, azimuth and quadrant elevation is accurately plotted, for effective engagement during limited visability	012 Recall stowage location of fire control equipment
1.	Select reference point in coordination with TC				
2.	Azimuth indicator is zeroed on reference point			*Reference point selected* is common for both TC and gunner	014 Operate fire control equipment
3.	Reference point is plotted on range card		Sector of responsibility is provided		015 Install/dismount and stow direct fire sighting equipment
4.	Identify targets on range card				021 Use military symbols
5.	Record deflection				022 Recall the four elements required to plot target on range card
6.	Record range				
7.	Record quadrant elevation for gun				023 Identify potential targets
8.	Record quadrant elevation for search light				024 Determine target azimuth
9.	Plot CE's sector of responsibility				025 Use binoculars and mil formula to estimate range
10.	Mark range card for appropriate firing position (primary, alternate, or supplemental)				026 Recall that best source of range is a tank mounted range finder
					027 Determine quadrant elevation for gun from

JOB DATA WORKSHEET
(TRADOC Pam 350-30)

DATE

JOB TITLE: 12F

DOS: CEV Gunnery Tasks

DUTY CODE: 2. Occupy Firing Positions

LEVEL: SL2

ITEM CODE	16. TASK, ELEMENTS J.P.M.	17. INITIATING CUES	18. CONDITIONS	19. STANDARDS	20. NOTES
C2301					Firing Table FT-165-A1
					028 Recall that range cards must be prepared for primary, alternate and supplemental positions
					C2304 Determine target range

JOB DATA WORKSHEET
(TRADOC Pam 350-30)

DATE

JOB TITLE: [illegible]

DOS: CEV Gunnery Tasks

TASK: [illegible] Occupy Firing Positions

LEVEL: SL3

ITEM CODE	TASK ELEMENTS	17. INITIATING CUES	18. CONDITIONS	19. STANDARDS	20. NOTES
	Prepare range cards	Firing Position is occupied	As commander of a CEV crew given a CEV at a firing position, paper, pencil, straight edge, and binoculars, in daylight, in combat, or during training or firing exercise	Target area is accurately sketched, target identification range, or azimuth and quadrant elevation is accurately plotted, for effective engagement during limited visibility selected reference point is common to gunner's R.P.	014 Operate fire control equipment
1.	Prepare [illegible] of target [illegible] military and [illegible] work in				021 Use military symbols
2.	Select reference point in [illegible] manner				022 Recall the four elements required to plot target on range card
3.	Deflection is based on azimuth indicator readings with zero on reference point		Sector of responsibility is provided		023 Identify potential targets
4.	Reference point is plotted on range card		TC may be assisted by Gunner		024 Determine target range
5.	Identify targets on range card				025 Use binoculars and mil formula to estimate range
6.	Record deflection				026 Recall that best source of range is a tank mounted range finder
7.	Record range				
8.	Record quadrant elevation for gun				027 Determine quadrant elevation for gun from Table FT-165-A1
9.	Record quadrant elevation for search light				028 Recall that range cards must be prepared for primary, alternate and supplemental positions
10.	Plot CEV's sector of responsibility or area of fire				029 Use map symbols

JOB DATA WORKSHEET
(TRADOC Pam 350-30)

Page 26a of ___ Pages
DATE

3 TITLE 12F	DOS CEV Gunnery Tasks
TY CODE 2. Occupy Firing Positions	LEVEL SL3

ITEM CODE	16. TASK, ELEMENTS J.P.M.	17. INITIATING CUES	18. CONDITIONS	19. STANDARDS	20. NOTES
C3201					C2304 Determine target range

JOB DATA WORKSHEET
(TRADOC Pam 350-30)

Page 27 of ___ Pages
DATE

3 TITLE	12F	DOS	CEV Gunnery Tasks
TY CODE	2. Occupy Firing Positions	LEVEL	SL3

ITEM CODE	16. TASK, ELEMENTS J.P.M.	17. INITIATING CUES	18. CONDITIONS	19. STANDARDS	20. NOTES
3202	Select Firing Positions	Assigned area is reached or immediate fire mission is required	As CEV commander, given a CEV with crew, daylight or dark, all weather conditions, in combat or during training or firing exercise	Positions selected provide full coverage of sector of responsibility for observation and field of fire	030 Recall CEV capabilities and limitations
1.	Consider sector of responsibility and designate reference point		Sector of responsibility has been assigned	Maximum advantage is taken of available cover, concealment	031 Recall site selection criteria for CEV
2.	Consider observation and field of fire			Most level firm surface available is selected, hull down where possible	032 Recall that dangerous targets may require immediate engagement without regard to firing position
3.	Consider cover and concealment				
4.	Select primary position				
5.	Select alternate positions				
6.	Select supplementary positions				

Form 1159 (USAARS) 21 Mar 80 Previous editions of this form are obsolete 20-1202 DC AFPP-FBT

JOB DATA WORKSHEET
(TRADOC Pam 350-30)

DATE

TITLE: 12F	DOS: CEV Gunnery Tasks
TY CODE: 2. Occupy Firing Positions	LEVEL: SL3

ITEM CODE	16. TASK, ELEMENTS J.P.M.	17. INITIATING CUES	18. CONDITIONS	19. STANDARDS	20. NOTES
C3203	Direct movement into a firing position	Firing position has been selected	Given a CEV with crew preparing to occupy a firing position	Vehicle is directed to position by most direct route, with least exposure	030 Recall CEV capabilities and limitations
1.	Determine best route to position		Day or nighttime under all weather conditions	to detection and disturbance of terrain	033 Use arm and hand signals to direct vehicle movement
2.	Designate position to driver		In combat or during training or firing exercise		
3.	When required, dismount and guide vehicle to position, or direct loader to guide				
4.	Use proper arm and hand signals				
					C3202 Select firing position

JOB DATA WORKSHEET
(TRADOC Pam 350-30)

DATE

B TITLE: 12F

DOS: CEV Gunnery Tasks

TY CODE: 3. Engage Targets

LEVEL: SL1

ITEM CODE	16. TASK, ELEMENTS J.P.M.	17. INITIATING CUES	18. CONDITIONS	19. STANDARDS	20. NOTES
C1301	Respond to a fire command (as loader or driver)	TC announces "GUNNER-HEP"	As loader or driver in a CEV crew, given a CEV in combat or during a firing exercise, during daylight, target is visible	Necessary actions in response to fire command elements are taken rapidly and accurately	001 Recall location of switches, controls and indicators
1.	(DRIVER) If moving, selects firing position, and position with hull oriented towards target		Maingun is boresighted and zeroed	Observe performance	006 Operate breechblock operating handle
2.	Observes for round bursts, reports sensings				010 Recall ammunition safety cautions and warnings
3.	(LOADER) Check turret ring and insure it is not locked				016 Recall misfire procedures
4.	Load maingun, check safety switch is set to FIRE, stand clear, and announce "UP"				020 Drive CEV in daylight or dark
5.	Prepare to reload				034 Recall elements of fire command
					035 Operate CEV intercom system
					038 Recall techniques for target detection
					C1302 Detect and identify targets
					C1201 Move into firing position
					C1101 Perform misfire

JOB DATA WORKSHEET
(TRADOC Pam 350-30)

DATE

JOB TITLE: 12F

DOS: CEV Gunnery Tasks

DUTY CODE: 3. Engage Targets

LEVEL: SL1

ITEM CODE	16. TASK, ELEMENTS J.P.M.	17. INITIATING CUES	18. CONDITIONS	19. STANDARDS	20. NOTES
C1301					procedures for maingun
					C1103 Load the M-136
					maingun

JOB DATA WORKSHEET
(TRADOC Pam 350-30)

DATE

TITLE 12F

DOS CEV Gunnery Tasks

CY CODE 3. Target Engagement

LEVEL SL1, 2 and 3

ITEM CODE	16. TASK, ELEMENTS J.P.M.	17. INITIATING CUES	18. CONDITIONS	19. STANDARDS	20. NOTES
1302	Detect and identify targets	Target engagement is eminent or underway	As a member of a CEV crew, in a CEV, in combat or during training or firing exercise, sufficient visibility	Identify all vehicles presented in TEC lesson 935-171-0203F (Armor Vehicle Recognition) by type and country only, without* error, within 25 minutes	023 Identify potential targets
	1. Search outward in 100 meter bands to detect target		Detect and identify target	(note: training standard)	037 Recall best method of destruction for target types
	2. Use movements, regular shapes (man made), and terrain disturbance to cue targets			Field Standard:	038 Recall techniques for target detection
	3. Rotate observation duties to reduce visual fatigue			Identify all vehicles observed as being either friendly or hostile	
	4. Use the four common features; track/suspension system, turret, maingun, and cupola, to identify vehicles				
	5. Classify stationary targets to determine best method of destruction as:				
	Bridges				
	Pillboxes and bunkers				
	Caves and tunnels				
	Wire barricades, roadblocks and obstacles				
	Solid roadblocks and barriers				

Previous editions of this form are obsolete

JOB DATA WORKSHEET
(TRADOC Pam 350-30)

DATE

JOB TITLE 12F

FOS CEV Gunnery Tasks

DUTY CODE 3. Target Engagement

LEVEL SL1

ITEM CODE	16. TASK, ELEMENTS J.P.M.	17. INITIATING CUES	18. CONDITIONS	19. STANDARDS	20. NOTES
C1303	Operate CEV during 7.62mm coax MG target engagement	TC announces "GUNNER COAX"	As driver in a CEV crew in a CEV, in combat or during a firing exercise with moving target	Vehicle is positioned to best facilitate engagement	020 Drive CEV in day or dark
1.	From the stop-observe assigned sector, await order to move			TC commands are rapidly and accurately executed	031 Recall site selc criteria for CEV
2.	On the move-slow down and maintain a steady speed and direction to provide a stable firing platform				034 Recall elements fire command
3.	If directed, or for moving target, come to a smooth stop at designated location				035 Operate CEV inte system C1201 Move into a fi position
4.	Continue to observe assigned sector				C1301 Respond to a f command

B-29

FB Form 1159c (USAADS) 21 Mar 80

Previous editions of this form are obsolete.

30-1393-B3 AF

JOB DATA WORKSHEET
(TRADOC Pam 350-30)

DATE

JOB TITLE: 12F

DOS: CEV Gunnery Tasks

DUTY CODE: 3. Target Engagement

LEVEL: SL1

ITEM CODE	16. TASK, ELEMENTS J.P.M.	17. INITIATING CUES	18. CONDITIONS	19. STANDARDS	20. NOTES
C1304	Engage targets with 7.62mm coax MG (as loader)	TC announces "GUNNER-COAX"	As loader in a CEV crew in a CEV, in combat or during a firing exercise	Coaxgun is serviced to allow engagement	010 Recall ammunition safety cautions and warnings
1.	Check that turret ring is not obstructed		Coax is loaded		016 Recall misfire procedures
2.	Check that weapon is charged and ready and safety is in the FIRE position				034 Recall elements of a fire command
3.	Insure that there is 3 to 4 inches of slack between ammunition box and receiver of gun before and during firing				035 Operate CEV intercom system
4.	Announce "UP"				049 Recall loading procedures for 7.62mm machine gun
5.	Upon command "CEASE FIRE" place weapon in SAFE position				C1105 Load the 7.62mm coax MG (M-240)
					C1106 Load the 7.62mm coax MG (M-73)
					C1107 Apply immediate action to reduce a stoppage in the 7.62mm MG
					C1301 Respond to a firing command

JOB DATA WORKSHEET
(TRADOC Pam 350-30)

DATE

TITLE 12F

DOS CEV Gunnery Tasks

Y CODE 3. Target Engagement

LEVEL SL2

ITEM CODE	16. TASK, ELEMENTS J.P.M.	17. INITIATING CUES	18. CONDITIONS	19. STANDARDS	20. NOTES
301	Respond to a firing command (as gunner)	TC announces "GUNNER-HEP"	As gunner in a CEV crew in a CEV in combat or during a firing exercise	Necessary actions, in response to fire command element are taken rapidly and accurately	001 Recall location of switches, controls, and indicators
1.	Insure turret power is ON		During daylight, target is visible		014 Operate fire control equipment
2.	Turn on maingun firing switch		Maingun has been boresighted and zeroed		016 Recall misfire procedures
3.	Look through sights to locate target				023 Identify potential targets
4.	If directed "TRAVERSE", traverse gun in direction given until TC announces "STEADY"				034 Recall elements of a fire command
5.	Slow traverse until TC announces "OK". When target is visually acquired announce "IDENTIFIED"				035 Operate CEV intercom system
6.	When TC announces range, elevate gun to obtain correct sight picture and alignment				036 Operate maingun controls
7.	When TC directs "FIRE", announce "ON THE WAY", wait one second, and press firing trigger				037 Recall best method of destruction for target types
8.	Observe for round burst				038 Recall techniques for target detection
9.	Continue engagement as directed until fire mission is terminated by TC				C1302 Detect and identify targets

JOB DATA WORKSHEET
(TRADOC Pam 350-30)

DATE

JOB TITLE: 12F

DOS: CEV Gunnery Tasks

TY CODE: 3. Target Engagement

LEVEL: SL2

ITEM CODE	16. TASK, ELEMENTS J.P.M.	17. INITIATING CUES	18. CONDITIONS	19. STANDARDS	20. NOTES
2301					C2101 Perform misfire procedures for maingun

JOB DATA WORKSHEET
(TRADOC Pam 350-30)

DATE

TITLE 12F	DOS CEV Gunnery Tasks
TY CODE 3. Target Engagement	LEVEL SL2

ITEM CODE	16. TASK, ELEMENTS J.P.M.	17. INITIATING CUES	18. CONDITIONS	19. STANDARDS	20. NOTES
2302	Engage targets during limited visibility (as gunner)	Fire mission is initiated during limited visibility by initial TC command of "GUNNER-HEP"	As gunner in a CEV crew in a CEV, during period of limited visibility or darkness, in combat or during firing or training exercise	Completes necessary actions in response to fire command to achieve target hit within 10 seconds	001 Recall location and function of switches, controls and indicators
1.	Turn on turret power and maingun switch				014 Operate fire control equipment
2.	Traverse to announced deflection, read back deflection		Maingun is boresighted and zeroed		016 Recall misfire procedures
3.	Set quadrant elevation on quadrant and zero bubble, read back quadrant elevation		Range card has been prepared		023 Identify potential targets
4.	After command "FIRE" announce "ON THE WAY", wait one second, and press firing trigger				024 Determine target azimuth
5.	Observe for burst				034 Recall elements of a fire command
6.	If required, adjust azimuth and elevation from subsequent fire commands until fire mission is terminated				035 Operate CEV intercom system
7.	If target is illuminated, continue engagement with direct fire sights until engagement is terminated				036 Operate maingun controls
					037 Recall best method of destruction for target types
					C2301 Respond to a firing command

Form 1159- (USAADS) 21 May 80 Previous editions of this form are obsolete DS AFPP-FDT

JOB DATA WORKSHEET
(TRADOC Pam 350-30)

DATE

3 TITLE: 12F

DOS: CEV Gunnery Tasks

TY CODE: 3. Target Engagement

LEVEL: SL2

ITEM CODE	16. TASK, ELEMENTS J.P.M.	17. INITIATING CUES	18. CONDITIONS	19. STANDARDS	20. NOTES
302					C2201 Prepare a circular range card

ATTACHMENT

JOB DATA WORKSHEET
(TRADOC Pam 350-30)

Page 35 of ___ Pages
DATE

JOB TITLE 12F	DOS CEV Gunnery Tasks
DUTY CODE 3. Target Engagement	LEVEL SL2

ITEM CODE	16. TASK, ELEMENTS J.P.M.	17. INITIATING CUES	18. CONDITIONS	19. STANDARDS	20. NOTES
C2303	Illuminate targets with searchlight (as gunner)	TC commands "GUNNER-WHITELIGHT" (or BLACK-LIGHT)	As gunner in a CEV crew, in a CEV in combat or during a firing or training exercise, during a period of darkness	All elements of firing command are properly followed without error. Designated target is illuminated	001 Recall location and function of switches, controls and indicators
1.	Turn on turret power				014 Operate fire control equipment
2.	Traverse to announced deflection, read back deflection		Searchlight is mounted and boresighted		023 Identify potential targets
3.	Set quadrant elevation on quadrant, zero bubble, read back quadrant elevation		Range card has been prepared		034 Recall elements of a fire command
4.	After TC announces "ILLUMINATE" move the searchlight beam on to the center of the target area				035 Operate CEV intercom system
5.	Traverse, elevate, or depress gun as directed by TC				036 Operate maingun controls
					038 Recall techniques for target detection
					041 Recall techniques for searchlight employment
					043 Use appropriate sighting equipment for black light
					C2301 Respond to a firing command

Form 1159c (USAADS) 21 Mar 80 Previous editions of this form are obsolete 2 [illegible] DC AFPRIMT

JOB DATA WORKSHEET
(TRADOC Pam 350-30)

DATE

OB TITLE
12F

DOS
CEV Gunnery Tasks

UTY CODE
3. Target Engagement

LEVEL
SL2

ITEM CODE	16. TASK, ELEMENTS J.P.M.	17. INITIATING CUES	18. CONDITIONS	19. STANDARDS	20. NOTES
C2303					C2201 Prepare a circular range card

JOB DATA WORKSHEET
(TRADOC Pam 350-30)

Page 36 of ___ Pages
DATE

JOB TITLE	12F	DOS	CEV Gunnery Tasks
DUTY CODE	3. Target Engagement	LEVEL	SL2/3

ITEM CODE	16. TASK, ELEMENTS J.P.M.	17. INITIATING CUES	18. CONDITIONS	19. STANDARDS	20. NOTES
C2304	Determine target range	A new target is designated or identified, for immediate engagement or for data entry on range card	As TC or gunner in a CEV crew, in a CEV in combat or during a firing or training exercise	Determine range of targets within 1000 meters to nearest 50 meters	Recall location and function of switches, controls and indicators
1.	If available, obtain target range from a vehicle with ranging capability or		Binoculars are available	For hasty estimation (football field method) to nearest 100 meters	014 Operate fire control equipment
2.	Set reticle selector to mils scale on 105F telescope		Vehicles equiped with a ranging capability (such as M-60 tank) may be available for assistance		015 Install/dismount and stow direct fire sighting equipment
3.	Measure target height in mils				
4.	Estimate target height in meters		TC makes final range determination		025 Use binoculars and WORM formula to estimate range
5.	Apply WORM formula to estimate range or				026 Recall that best source of range is a tank mounted range finder
6.	To estimate range of targets with known horizontal width, use binocular mil scale and apply WORM formula or				038 Recall techniques for target detection
7.	Range with .50 cal MG by placing round on target and reading range from M36 ballistic reticle or				045 Operate external radio communications
8.	For immediate fire without disclosing position, out to 500 meters, estimate 100 segments using football field length as base. Over 500 meters, select halfway				046 Estimate 100 meter range using football field method

JOB DATA WORKSHEET
(TRADOC Pam 350-30)

DATE

B TITLE 12F

DOS CEV Gunnery Tasks

TY CODE 3. Target Engagement

LEVEL SL2/3

ITEM CODE	16. TASK, ELEMENTS J.P.M.	17. INITIATING CUES	18. CONDITIONS	19. STANDARDS	20. NOTES
2304					
	Point and football field				
	Method				

JOB DATA WORKSHEET
(TRADOC Pam 350-30)

DATE

JOB TITLE: 12F

DOS: CEV Gunnery Tasks

DUTY CODE: 3. Target Engagement

LEVEL: SL2/3

ITEM CODE	16. TASK, ELEMENTS J.P.M.	17. INITIATING CUES	18. CONDITIONS	19. STANDARDS	20. NOTES
C2305	Engage stationery targets with maingun using Burst-on-Target (BOT)	Target engagement is underway, first round misses, burst is sensed by gunner or by TC	As TC or gunner in a CEV crew in a CEV, in combat or during a firing exercise	Obtain second round hit within 20 seconds for at least 80% of targets engaged	001 Recall location and function of switches, controls and indicators
	Note: Procedures for either gunner or TC, whoever senses burst)		Target is visible		014 Operate fire control equipment
1.	Keep sight on aiming point and sense burst		Maingun is boresighted and zeroed		016 Recall misfire procedures
2.	Announce the sensing i.e., "SHORT-B-O-T"		Target has been detected, identified and is under engagement		024 Determine target azimuth
3.	Location of burst becomes the BOT aiming point				025 Use binoculars and WORM formula to estimate range
4.	Reposition gun so that BOT aiming point is on the target				034 Recall elements of a fire command
5.	When loader announces "UP", announce "OK, THE WAY" and press firing trigger				035 Operate CEV intercom system
6.	Sense the round and re-aim if required. Continue to repeat sequence until target is destroyed. If sensing is "LOST" announce "DROP 100" and continue to engage				036 Operate maingun controls 037 Recall best method of destruction for target types
7.	TC terminates engagement by commanding "CEASE FIRE"				C2301 Respond to a fire command

JOB DATA WORKSHEET
(TRADOC Pam 350-30)

Page 37a of ___ Pages
DATE

JOB TITLE
12F

DOS
CEV Gunnery Tasks

DUTY CODE
3. Target Engagement

LEVEL
SL2/3

ITEM CODE	16. TASK, ELEMENTS J.P.M.	17. INITIATING CUES	18. CONDITIONS	19. STANDARDS	20. NOTES
C2305					C3301 Issue a fire command
					C2304 Determine target range

Form 1159c (USAADS) 21 Mar 80 Previous editions of this form are obsolete 30.1202 P.1 AFPP-FBT

JOB DATA WORKSHEET
(TRADOC Pam 350-30)

DATE

JOB TITLE 12F

DOS CEV Gunnery Tasks

CTY CODE 3. Target Engagement

LEVEL SL2

ITEM CODE	16. TASK, ELEMENTS J.P.M.	17. INITIATING CUES	18. CONDITIONS	19. STANDARDS	20. NOTES
C2306	Engage targets with maingun using rapid sequential round (gunner)	Gunner and TC cannot use BOT to correct aim on target under engagement	As gunner in a CEV crew, in a CEV in combat or during a firing exercise	Obtain second round hit within 20 seconds for at least 80% of targets engaged	001 Recall location and function fo switches, controls and indicators
1.	Receive change in deflection in mils, reposition gun in deflection	Gunner senses round as "LOST" TC initiates subsequent fire command by announcing	Maingun is boresighted and zeroed		014 Operate fire control equipment
2.	Receive change in range in meters if HEP reticle is being used	"SHORT" or "OVER" if observed	BOT correction cannot be made after previous round		016 Recall misfire procedures
3.	Reposition gun so that center of target is at new range in sight reticle				024 Determine target azimuth
4.	When TC announces "FIRE" announce "ON THE WAY", press firing trigger and observe for burst, keeping gun on target				025 Use binoculars and WORM formula to estimate range
5.	If sensing is "LOST", and TC does not issue a subsequent fire command, automatically drop 100 meters in range and fire				034 Recall elements of a fire command
6.	Continue process until TC terminates engagement				035 Operate CEV intercom system
					036 Operate main gun controls
					037 Recall best method of destruction for target types
					C2301 Respond to a fire command

Form 1159- (USAADS) 21 Mar 80 Previous editions of this form are obsolete 30.1202.D1 AFPP-FBT

JOB DATA WORKSHEET
(TRADOC Pam 350-30)

Page 38a of ___ Pages

DATE

JOB TITLE 12F

DOS CEV Gunnery Tasks

DUTY CODE 3. Target Engagement

LEVEL SL2

ITEM CODE	16. TASK, ELEMENTS J.P.M.	17. INITIATING CUES	18. CONDITIONS	19. STANDARDS	20. NOTES
C2306					C2304 Determine target range

Form 1159c (USAADS) 21 Mar 80

Previous editions of this form are obsolete

20_1202_F AFPP-FDT

JOB DATA WORKSHEET
(TRADOC Pam 350-30)

Page 39 of ___ Pages
DATE

B TITLE 12F

DOS CEV Gunnery Tasks

TY CODE 3. Target Engagement

LEVEL SL2

ITEM CODE	16. TASK, ELEMENTS J.P.M.	17. INITIATING CUES	18. CONDITIONS	19. STANDARDS	20. NOTES
2307	Engage targets with 7.62mm coax MG (as gunner)	TC announces "GUNNER-COAX"	As the gunner in a CEV crew in a CEV, in combat or during a firing exercise	Firing commences within 5 seconds of initial command and target area is covered within 20 seconds	001 Recall location and function of switches, controls and indicators
1.	Set turret power and machine gun switches to ON		During daylight 7.62mm coax MG is mounted, boresighted, zeroed and loaded		010 Recall ammunition safety cautions and warnings
2.	Search through sight for target, announce "IDENTIFIED" when target is seen		Target is visible		014 Operate fire control equipment
3.	Use infinity sight for point target and M32C with HEP reticle for area or moving targets				030 Recall CEV capabilities and limitations
4.	Estimate target ranges, and adjust gun for azimuth and elevation				032 Recall that dangerous targets may require immediate engagement without regard to firing positions
5.	Upon command "FIRE" announce "ON THE WAY" and commence firing				034 Recall elements of a fire command
6.	Use appropriate target engagement technique firing 20-25 round bursts				035 Operate CEV intercom system
7.	For moving targets use initial lead of 5 mils, and adjust by observing strike or as directed by TC				052 Recall target engagement techniques for machine gun engagements
8.	Upon command "CEASE FIRE",				C2301 Respond to a firing command

Form 1159c (USAADS) 21 Mar 80 Previous editions of this form are obsolete. 20.1202 DC AFPP-EUT

JOB DATA WORKSHEET
(TRADOC Pam 350-30)

DATE

JOB TITLE: 12F

DOS: CEV Gunnery Tasks

DUTY CODE: 3. Target Engagement

LEVEL: SL2

ITEM CODE	16. TASK, ELEMENTS J.P.M.	17. INITIATING CUES	18. CONDITIONS	19. STANDARDS	20. NOTES
C2307	turn machine gun switch to OFF				C2302 Detect and identify targets C2304 Determine target range

JOB DATA WORKSHEET
(TRADOC Pam 350-30)

DATE

JOB TITLE 12F

DOS CEV Gunnery Tasks

DUTY CODE 3. Target Engagement

LEVEL SL3

ITEM CODE	16. TASK, ELEMENTS J.P.M.	17. INITIATING CUES	18. CONDITIONS	19. STANDARDS	20. NOTES
C3301	Issue a Firing Command	A maingun target has been designated	As TC in a CEV crew, given a CEV in combat or during a firing exercise	Fire command is given including all elements with accurate data subsequent commands given until target is destroyed	014 Operate fire control equipment
1.	Locate and identify target		During daylight, target is visible		016 Recall misfire procedures
2.	Alert crew by announcing over intercom "GUNNER-HEP"		Maingun has been boresighted and zeroed		023 Identify potential targets
3.	Describe target ("BUNKER", etc.)				024 Determine targets azimuth
4.	Direct gunner to lay gun in azimuth "TRAVERSE RIGHT (LEFT)", "STEADY", "ON" (or use TC controls to lay gun)				025 Use binoculars and mil formula to estimate range
5.	Estimate range and announce in meters "RANGE 500" to nearest 25 meters				030 Recall CEV capabilities and limitations
6.	Wait for loader to announce "UP" and gunner to announce "IDENTIFIED"				034 Recall elements of a fire command
7.	Command "FIRE"				035 Operate CEV intercom system
8.	Wait for gunner to announce "ON THE WAY" and observe round burst				036 Operate maingun controls
9.	Assess damage or miss distance and correct as required				037 Recall best method of destruction for target types

JOB DATA WORKSHEET
(TRADOC Pam 350-30)

Page 40a of ___ Pages
DATE

JOB TITLE 12F	DOS CEV Gunnery Tasks
CITY CODE 3. Target Engagement	LEVEL SL3

ITEM CODE	16. TASK, ELEMENTS J.P.M.	17. INITIATING CUES	18. CONDITIONS	19. STANDARDS	20. NOTES
C3301					038 Recall techniques for target detection
10.	Terminate engagement when target is destroyed				
					C1302 Detect and identify targets

Form 1159- (USAADS) 21 Mar 80 Previous editions of this form are obsolete 20 1302 ... AFPP-EDT

JOB DATA WORKSHEET
(TRADOC Pam 350-30)

DATE

OB TITLE	12F	DOS	CEV Gunnery Tasks
UTY CODE	3. Target Engagement	LEVEL	SL3

ITEM CODE	16. TASK, ELEMENTS J.P.M.	17. INITIATING CUES	18. CONDITIONS	19. STANDARDS	20. NOTES
C3302	Engage targets during limited visibility (as TC)	Engagement of a target on range card has been directed or determined	As TC in a CEV crew in a CEV in combat or during firing or training exercise, during a period of limited visibility or darkness	All elements of firing command are properly announced	001 Recall location and function of switches, controls and indicators
1.	Identify target on range card			Correct azimuth and quadrant elevation are reported from range card	014 Operate fire control equipment
2.	Initiate fire mission by announcing "GUNNER-HEP"		Range card has been prepared		016 Recall misfire procedures
3.	Determine target deflection from range card, and announce deflection to gunner		Maingun is boresighted and zeroed		023 Identify potential targets
4.	Determine quadrant elevation from range card, and announce to gunner				024 Determine target azimuth
5.	Verify deflection and quadrant elevation as read back by gunner, and Loader says "UP"				034 Recall elements of a fire command
6.	Command "FIRE"				036 Operate maingun controls
7.	Observe burst, correct aim as required				037 Recall best method of destruction for target types
8.	Assess damage and terminate engagement when target is destroyed				C3301 Issue a firing command
					C3201 Prepare range cards

Form 1159 (USAADS) 21 Mar 80

Previous editions of this form are obsolete.

JOB DATA WORKSHEET
(TRADOC Pam 350-30)

DATE

JOB TITLE 12F	DOS CEV Gunnery Tasks
DUTY CODE 3. Engage Targets	LEVEL SL3

ITEM CODE	16. TASK, ELEMENTS J.P.M.	17. INITIATING CUES	18. CONDITIONS	19. STANDARDS	20. NOTES
C3303	Illuminate targets with searchlight (as TC)	Illumination mission is directed or required	As TC in a CEV crew in a CEV in combat or during a training or firing exercise during darkness	All elements of firing command are properly announced	001 Recall location and function of switches, controls and indicators
1.	Identify target on range card, and determine type of illumination required		Searchlight is mounted and boresighted	Correct azimuth and quadrant elevation are reported from range card	014 Operate fire control equipment
2.	Initiate fire mission by announcing "GUNNERS-WHITE LIGHT" (or "BLACKLIGHT")		Range card has been prepared	Correct search light employment techniques are used	023 Identify potential targets
3.	Determine target deflection from range card and announce to gunner			Target is illuminated	034 Recall elements of a fire command
4.	Determine quadrant elevation from range card and announce to gunner			Cautions and warnings are observed	035 Operate CEV intercom system
5.	Verify deflection and quadrant elevation as read back by gunner				036 Operate maingun controls
6.	Set controls on AN/VSS-1 control box for desired illumination				038 Recall techniques for target detection
7.	Announce "ILLUMINATE" and turn on searchlight				039 Recall that CEV's mounting searchlights do not fire while illuminating because of smoke and dust obscuration
8.	Correct searchlight position as required				040 Recall that CEV's with searchlight mounted should not fire because of possible muzzle blast damage to searchlight

JOB DATA WORKSHEET
(TRADOC Pam 350-30)

DATE

JOB TITLE: 12F

DOS: CEV Gunnery Tasks

DUTY CODE: 3. Engage Targets

LEVEL: SL3

ITEM CODE	16. TASK, ELEMENTS J.P.M.	17. INITIATING CUES	18. CONDITIONS	19. STANDARDS	20. NOTES
C3303					
9.	Use correct searchlight techniques				041 Recall techniques for searchlight employment
10.	Terminate mission when completed				042 Recall that searchlight must not be used in overdrive more than once every five minutes
					043 Use appropriate sighting equipment for blacklight
					044 Recall that CEV should move to alternate position as soon as possible
					C3301 Issue firing command
					C3201 Prepare range cards

JOB DATA WORKSHEET
(TRADOC Pam 350-30)

DATE

JOB TITLE 12F

DOS CEV Gunnery Tasks

DUTY CODE 3. Target Engagement

LEVEL SL3

ITEM CODE	16. TASK, ELEMENTS J.P.M.	17. INITIATING CUES	18. CONDITIONS	19. STANDARDS	20. NOTES
C3304	Engage targets with maingun using rapid sequential round (TC)	Previous round error can not be corrected using BOT , or sensed as "LOST"	As TC in a CEV crew, in a CEV in combat, or during a firing exercise, target is visible	Obtain second round hit within 20 seconds for at least 80% of targets engaged	001 Recall location and function of switches, controls, and indicators
1.	Sense round or receive sensing from gunner or driver		Maingun is boresighted and zeroed		014 Operate fire control equipment
2.	Initiate subsequent fire command by announcing "SHORT" or "OVER"		Target has been detected, identified and is under engagement		016 Recall misfire procedures
3.	Correct deflection by announcing direction and mils e.g. "LEFT-2" or "RIGHT-3"				024 Determine target azimuth
4.	Correct elevation by announcing direction and meters e.g. "DROP 50" or "ADD 25"				025 Use binoculars and WORM formula to estimate range
5.	After gun is repositioned and loader announces "UP", command "FIRE"				034 Recall elements of a fire command
6.	Sense burst and continue corrections until target is destroyed				035 Operate CEV intercom system
7.	If sensing is LOST, deflection is more then 3 mils or range more than 200 meters off, command "CEASE FIRE" and issue a new fire command to engage				036 Operate maingun controls
					037 Recall best method of destruction for target types
					047 Recall criteria for size of range correction in subsequent fire

JOB DATA WORKSHEET
(TRADOC Pam 350-30)

Page 43a of ___ Pages
DATE

B TITLE 12F	DOS CEV Gunnery Tasks
TY CODE 3. Target Engagement	LEVEL SL3

ITEM CODE	16. TASK, ELEMENTS J.P.M.	17. INITIATING CUES	18. CONDITIONS	19. STANDARDS	20. NOTES
.304 8.	Assess damage and terminate engagement when target is destroyed				commands (25 meters for measured range, 50 meters for estimated range, doubled if miss is over 100 meters)
					C3301 Issue a fire command
					C2304 Determine target range

JOB DATA WORKSHEET
(TRADOC Pam 350-30)

Page 44 of ___ Pages
DATE

JOB TITLE 12F	DOS CEV Gunnery Tasks
CITY CODE 3. Target Engagement	LEVEL SL3

ITEM CODE	16. TASK, ELEMENTS J.P.M.	17. INITIATING CUES	18. CONDITIONS	19. STANDARDS	20. NOTES
C3305	Engage ground targets with cal .50 M-85 MG	A .50 cal target is identified	As TC in a CEV crew, in a CEV in combat or during a firing exercise	Open fire within 5 seconds of target designation, and place rounds on target within 20 seconds	001 Recall location and function of switches, controls and indicators
1.	Initiate engagement by announcing "CALIBER .50"		Cal .50 MG is mounted, boresighted, zeroed, and loaded, M34 or M36 is installed	Fire is continued until target is destroyed, nullified or out of range	010 Recall ammunition safety cautions and warnings
2.	Set cupola power switch to ON safety to FIRE, and rate switch to LOW				014 Operate fire control equipment
3.	Estimate target range and lay gun on that range line in sight reticle, using azimuth and elevation controls for cupola				016 Recall misfire procedures
4.	Fire 10 to 15 round bursts in low rate				030 Recall CEV capabilities and limitations
5.	Adjust fire by "walking" tracers into target area				032 Recall that dangerous targets may require immediate engagement without regard to firing positions
6.	Terminate engagement by announcing "TC COMPLETE"				034 Recall elements of a fire command
7.	Place safety switch to OFF				035 Operate CEV intercom system
					050 Recall loading procedures for cal .50 machine gun

Form 1159a (USAADS) 31 Mar 80

JOB DATA WORKSHEET
(TRADOC Pam 350-30)

Page 44a of ___ Pages
DATE

OB TITLE	12F	DOS	CEV Gunnery Tasks
UTY CODE	3. Target Engagement	LEVEL	SL3

ITEM CODE	16. TASK, ELEMENTS J.P.M.	17. INITIATING CUES	18. CONDITIONS	19. STANDARDS	20. NOTES
C3305					052 Recall target engagement techniques for machine gun engagements
					C3101 Load the cal .50 M-85 MG
					C3102 Correct a stoppage of the cal .50 M-85 MG, using immediate action
					C3301 Issue a firing command
					C3201 Prepare range cards

Form 1159 (USAADS) 21 Mar 70 Previous editions of this form are obsolete

JOB DATA WORKSHEET
(TRADOC Pam 350-30)

DATE

JOB TITLE	12F	DOS	CEV Gunnery Tasks
DUTY CODE	3. Target Engagement	LEVEL	SL3

ITEM CODE	16. TASK, ELEMENTS J.P.M.	17. INITIATING CUES	18. CONDITIONS	19. STANDARDS	20. NOTES
C3306	Engage aerial targets with cal .50 M-85 MG	Aerial attack is underway, unit/supported unit commander directs engagement	As TC in a CEV crew, in a CEV during combat or firing exercise M-85 is mounted, boresighted, zeroed, and loaded.	Aircraft is engaged before passing over or post the CEV	001 Recall location and function of switches, controls and indicators
1.	Initiate engagement by announcing "CALIBER .50"	or Nearby air defense weapon engages target			010 Recall ammunition safety cautions and warnings
2.	Set cupola power to ON safety switch to FIRE, and rate switch to HIGH	or Target meets hostile criteria under current control measures	Aircraft meets hostile criteria, and engagement authority has been granted		014 Operate fire control equipment
3.	Aim above and in front of target and fire a continous burst until target flies through cone of fire				016 Recall misfire procedures
4.	Continue to reposition and fire using cone of fire technique until target is destroyed or out of range				030 Recall CEV capabilities and limitations
					034 Recall elements of a fire command
5.	Terminate engagement by announcing "TC COMPLETE"				035 Operate CEV intercom system
6.	Place safety switch to OFF				052 Recall target engagement techniques for machine gun engagements
					C3101 Load the Cal.50 M-85 MG
					C3102 Correct a stoppage of a cal .50 M-85 MG using immediate action
					C3301 Issue a firing command

JOB DATA WORKSHEET
(TRADOC Pam 350-30)

DATE

TLE 12F

DOS CEV Gunnery Tasks

ODE 3. Target Engagement

LEVEL SL3

N E	16. TASK, ELEMENTS J.P.M.	17. INITIATING CUES	18. CONDITIONS	19. STANDARDS	20. NOTES
	Engage targets with 7.62mm coax MG (as TC)	Coax gun target is selected or designated	As TC in a CEV crew, in a CEV in combat or during a firing exercise during daylight	Firing commences within 5 seconds of initial command and target area is covered within 20 seconds	001 Recall location and function of switches, controls and indicators
	Visually acquire target and identify				010 Recall ammunition safety cautions and warnings
	Command "GUNNER-COAX" and lay gun on target		7.62mm coax MG is mounted, boresighted, zeroed, and loaded	All commands are correctly given	014 Operate fire control equipment
	Identify target e.g. "TROOPS" or "TRUCK" and estimated range		Target is visible		030 Recall CEV capabilities and limitations
	Upon receiving "UP" from loader and "IDENTIFIED" from gunner, command "FIRE" and observe fire				032 Recall that dangerous targets may require immediate engagement without regard to firing positions
	Announce adjustments to gunner in shortest possible terms				034 Recall elements of a fire command
	Assess damage and terminate engagement when target is destroyed, neutralized, or out of range by commanding "CEASE FIRE"				035 Operate CEV intercom system
					052 Recall target engagement techniques for machine gun engagements
					C2304 Determine target range
					C3301 Issue a firing command

APPENDIX C

OPERATIONAL SEQUENCE DIAGRAMS FOR CEV GUNNERY

Operational Sequence Diagrams for Collective CEV Gunnery Tasks

In order to facilitate evaluation of DORACs for assessing gunnery proficiency of CEV personnel, operational sequence diagrams (OSDs) have been prepared which depict the flow of activities performed in conduct of CEV gunnery tasks and describe the actions and interactions of crew members as activities are performed. Successful employment of the CEV as a demolition weapon depends on the extent to which the crew functions as a coordinated team. Thus, in order to be maximally useful, DORACs for CEV gunnery should provide for the assessment of CEV crew readiness. By comparing the OSD descriptions of crew requirements in gunnery task performance against the scenario and evaluation capabilities of various DORACs proposed, we can identify the DORACs that have the greatest ability to assess CEV crew readiness.

A master flowchart has been prepared which portrays the sequence of activities required in conduct of firing missions. Blocks 1.0 through 5.2-2 describe activities performed to prepare the CEV for a firing mission. Included in these activities are stowing the basic load of ammunition for the weapons systems, performing all checks of the weapons system, boresighting the weapons, and loading and zeroing the machineguns. Activities performed in conduct of various types of firing missions are presented in blocks 7.0 through 53.0. Firing missions are distinguished in terms of whether the CEV is firing from a predetermined firing position using a range card (blocks 11.0-13.0) or from a position taken while moving in support of a maneuver force (blocks 7.0-9.0) and on the basis of the weapon system employed: machinegun (block 15.0), searchlight (27.0), or maingun (32.0).

Combining various activity blocks on the master flowchart, seven collective tasks have been developed that encompass crew requirements for the gunnery portion of CEV employment. The seven collective gunnery tasks are:

1. Preparation of CEV for Firing Mission.
2. Engagement of Targets with 7.62mm Coax Machinegun.
3. Engagement of Aerial Targets with Cal .50 Machinegun.
4. Engagement of Ground Targets with Cal .50 Machinegun.
5. Engage Targets with Searchlight from Predetermined Positions.
6. Engagement of Targets with 165mm Gun from Predetermined Firing Position

7. Engagement of Targets with 165mm Gun as Part of Maneuver Force.

Task descriptions consist of a flowchart of activities performed during conduct of the task followed by verbal descriptions of actions performed by the different CEV crew members during task performance. Activities presented in a task flowchart are numbered in reference to activities in the master flowchart. The verbal description of task activities consists of four panels (one for each crew member) divided into a series of blocks. A description of a particular action performed by a crew member in performance of a task activity is provided in a block. In the lower right hand corner of each block with text is an alphanumeric dode which keys the action performed in the block to an activity in the task and master flowcharts (i.e., 5.0, 10.0, etc.), identifies the position of the action in the sequence of actions that accomplish the activity (i.e., 1st action, 2nd action, etc.), and identifies the crew member that performs the action (a=tank commander, b=gunner, c=loader, d=driver). For example, a block numbered 10.2c refers to an action performed by the loader which is the second action in the sequence of actions performed to accomplish activity 10. Note that actions described in a block can be a part of more than one activity.

In the lower left hand corner of each block is another alphanumeric code in parentheses. The action descriptions p-ovided in the different blocks were taken from the individual task descriptions prepared earlier. The codes in parentheses reference an action to a specific individual task (first five digits) and element of that task (digits following the decimal).

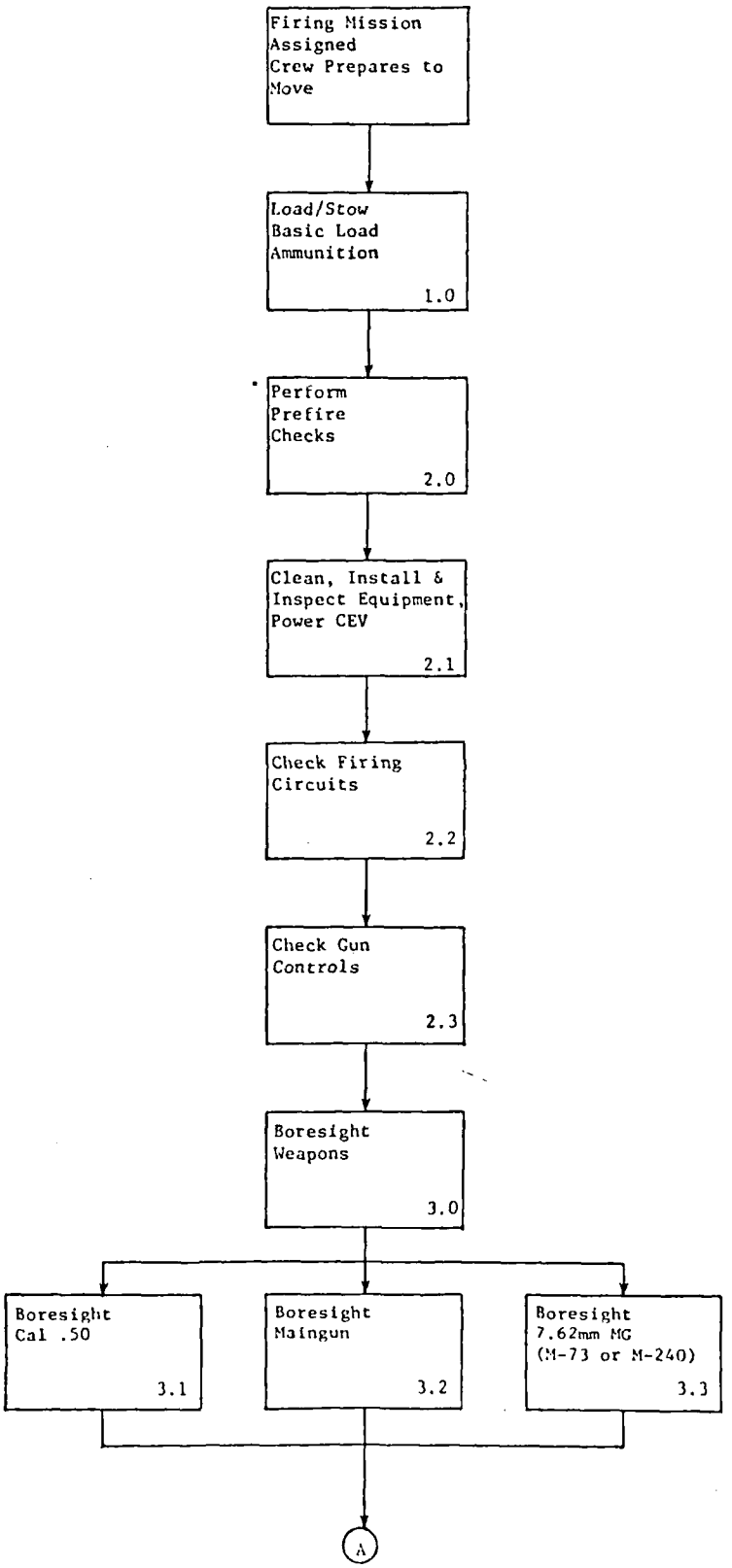
Firing Mission Assigned Crew Prepares to Move
Load/Stow Basic Load Ammunition
1.0
Perform Prefire Checks
2.0
Clean, Install & Inspect Equipment, Power CEV
2.1
Check Firing Circuits
2.2
Check Gun Controls
2.3
Boresight Weapons
3.0
Boresight Cal .50
3.1
Boresight Maingun
3.2
Boresight 7.62mm MG (M-73 or M-240)
3.3
A

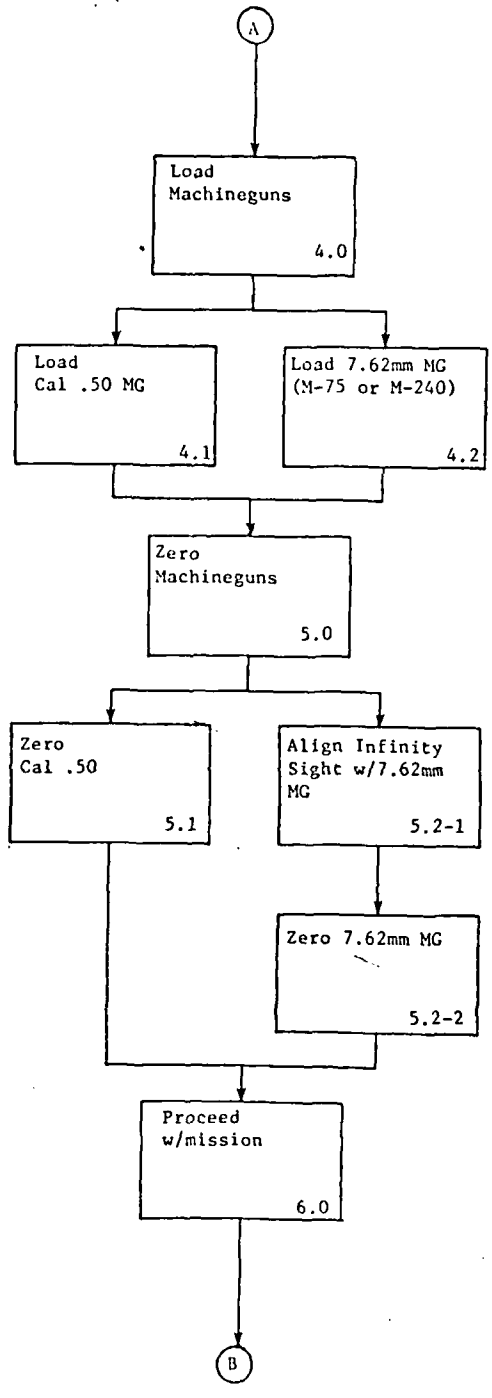
A
Load Machineguns
4.0
Load Cal .50 MG
4.1
Load 7.62mm MG (M-75 or M-240)
4.2
Zero Machineguns
5.0
Zero Cal .50
5.1
Align Infinity Sight w/7.62mm MG
5.2-1
Zero 7.62mm MG
5.2-2
Proceed w/mission
6.0
B

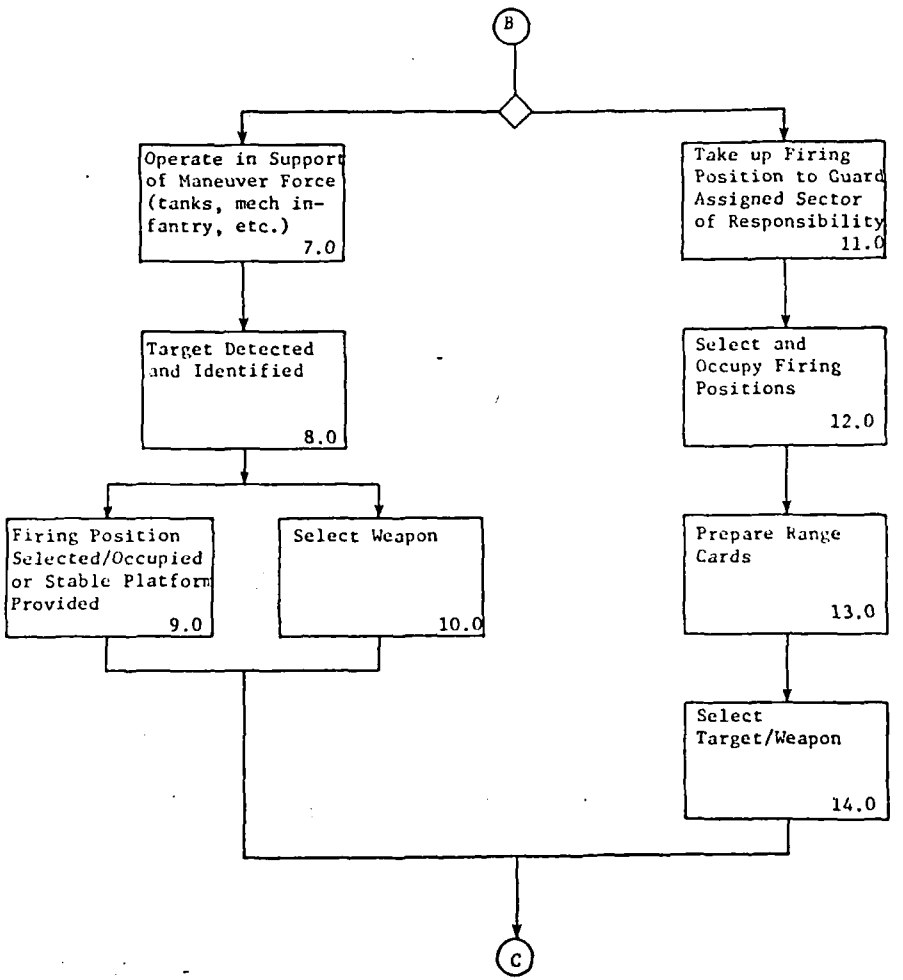
B
Operate in Support of Maneuver Force (tanks, mech infantry, etc.) 7.0
Target Detected and Identified 8.0
Firing Position Selected/Occupied or Stable Platform Provided 9.0
Select Weapon 10.0
Take up Firing Position to Guard Assigned Sector of Responsibility 11.0
Select and Occupy Firing Positions 12.0
Prepare Range Cards 13.0
Select Target/Weapon 14.0
C

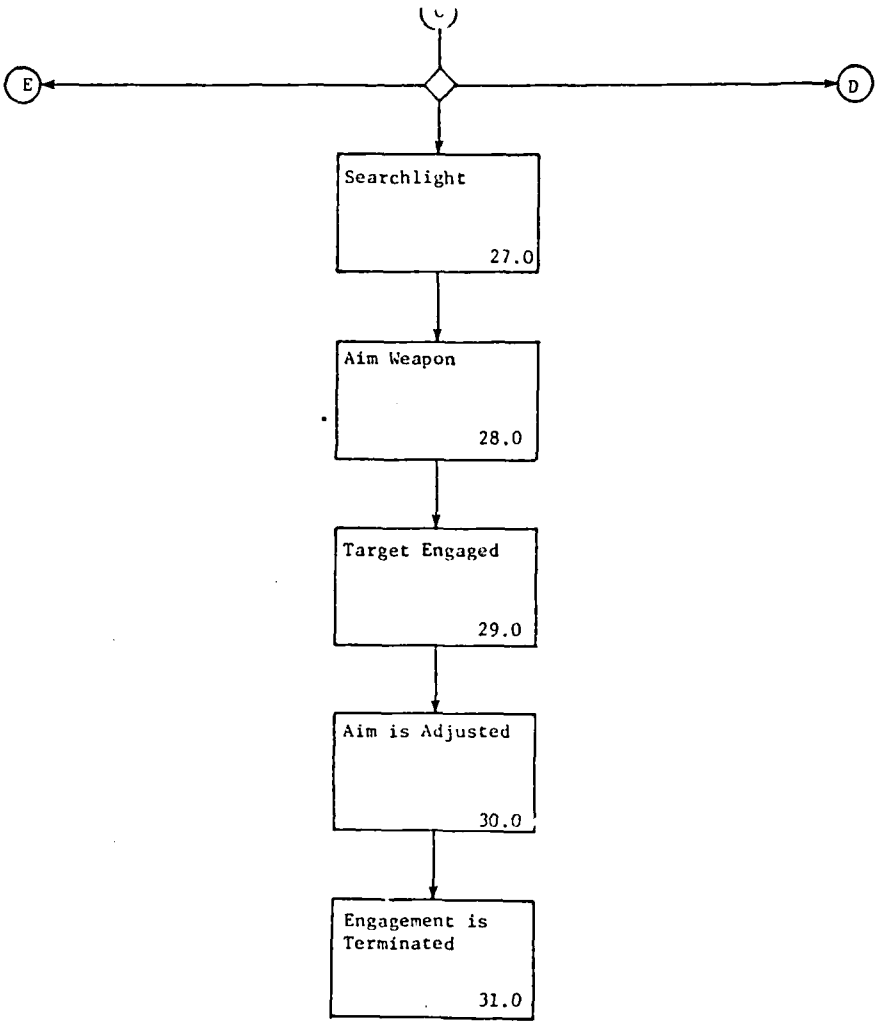
E
D
Searchlight
27.0
Aim Weapon
28.0
Target Engaged
29.0
Aim is Adjusted
30.0
Engagement is Terminated
31.0

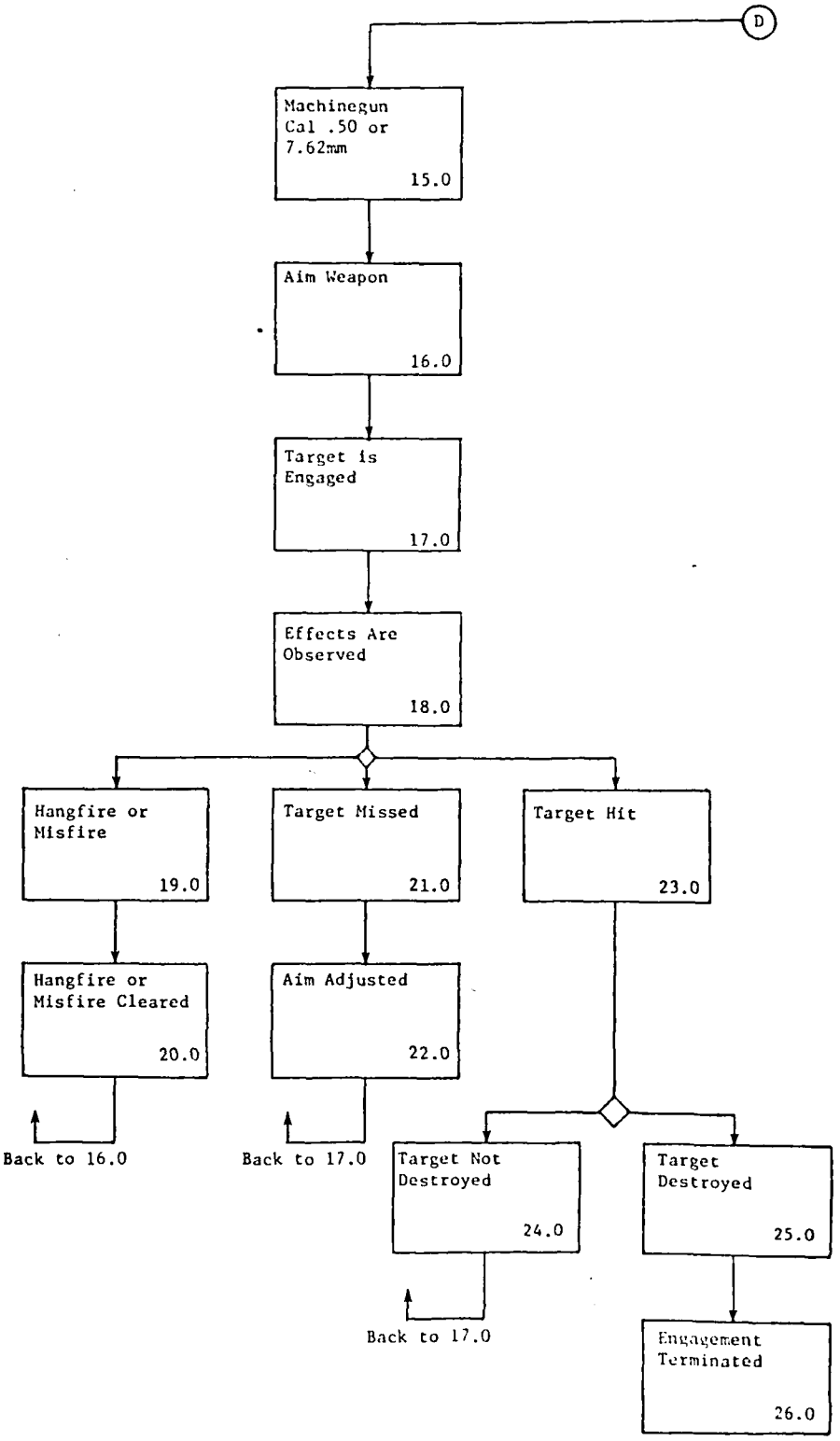
D
Machinegun Cal .50 or 7.62mm
15.0
Aim Weapon
16.0
Target is Engaged
17.0
Effects Are Observed
18.0
Hangfire or Misfire
19.0
Target Missed
21.0
Target Hit
23.0
Hangfire or Misfire Cleared
20.0
Aim Adjusted
22.0
Back to 16.0
Back to 17.0
Target Not Destroyed
24.0
Target Destroyed
25.0
Back to 17.0
Engagement Terminated
26.0

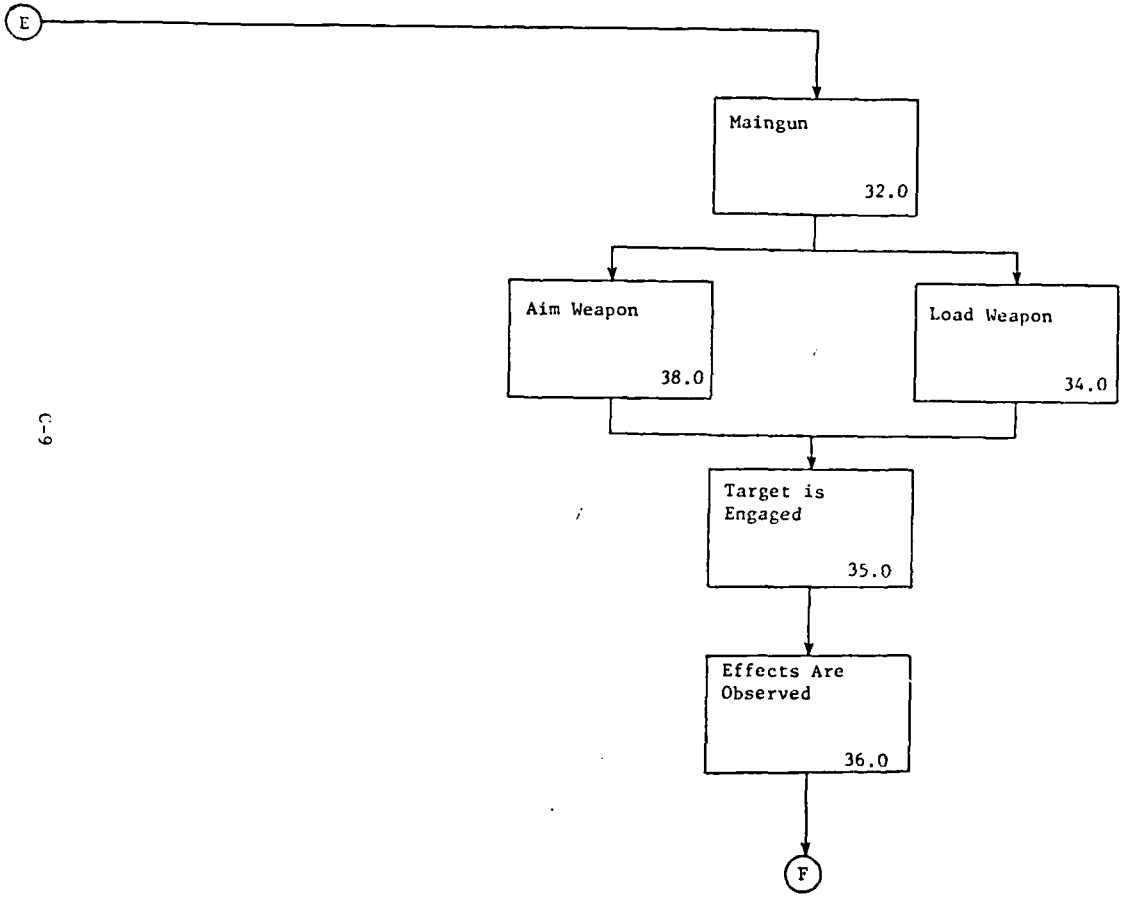
E
Maingun
32.0
Aim Weapon
38.0
Load Weapon
34.0
Target is Engaged
35.0
Effects Are Observed
36.0
F

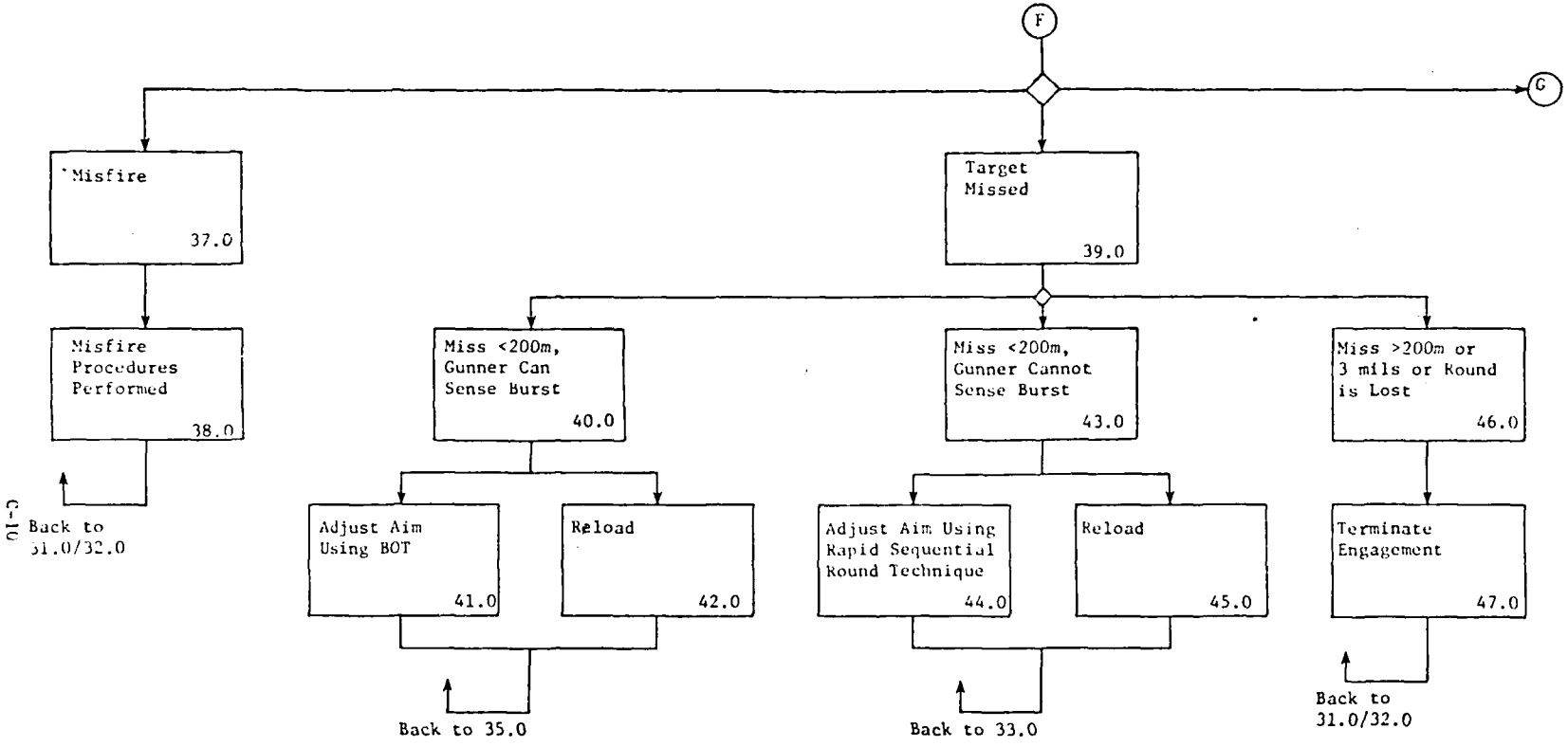
F
G
Misfire
37.0
Misfire Procedures Performed
38.0
Back to 31.0/32.0
Target Missed
39.0
Miss <200m, Gunner Can Sense Burst
40.0
Adjust Aim Using BOT
41.0
Reload
42.0
Back to 35.0
Miss <200m, Gunner Cannot Sense Burst
43.0
Adjust Aim Using Rapid Sequential Round Technique
44.0
Reload
45.0
Back to 33.0
Miss >200m or 3 mils or Round is Lost
46.0
Terminate Engagement
47.0
Back to 31.0/32.0

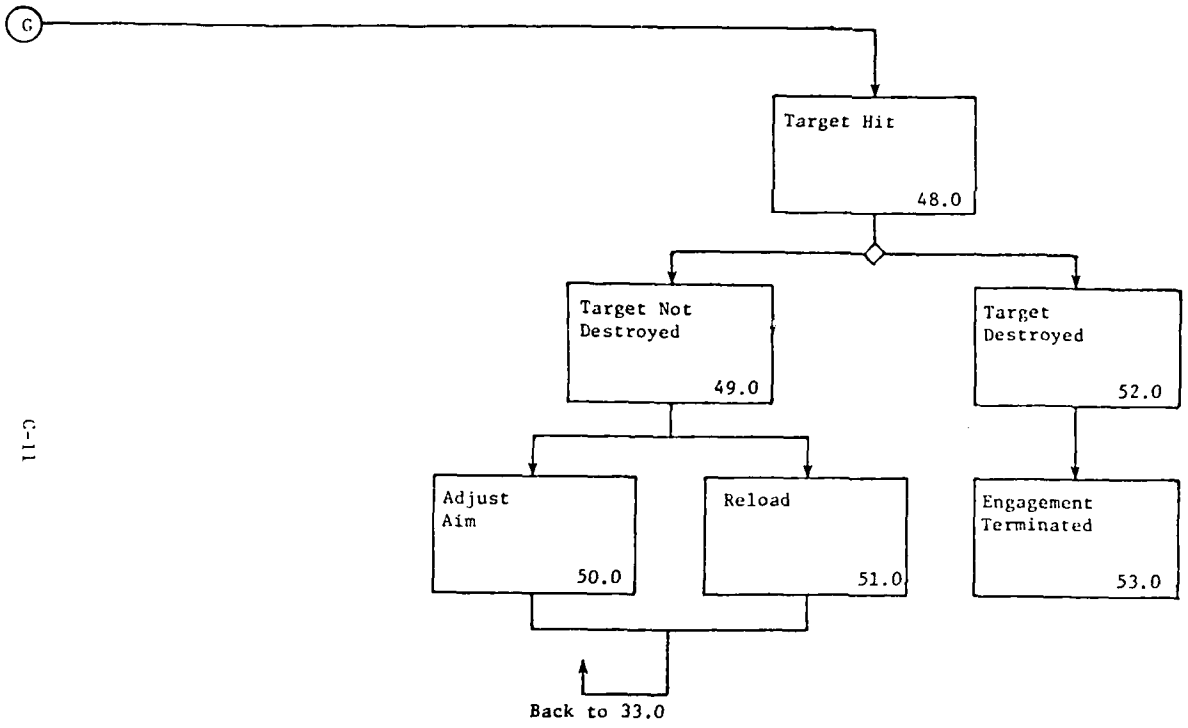
G
Target Hit
48.0
Target Not Destroyed
49.0
Target Destroyed
52.0
Adjust Aim
50.0
Reload
51.0
Engagement Terminated
53.0
Back to 33.0

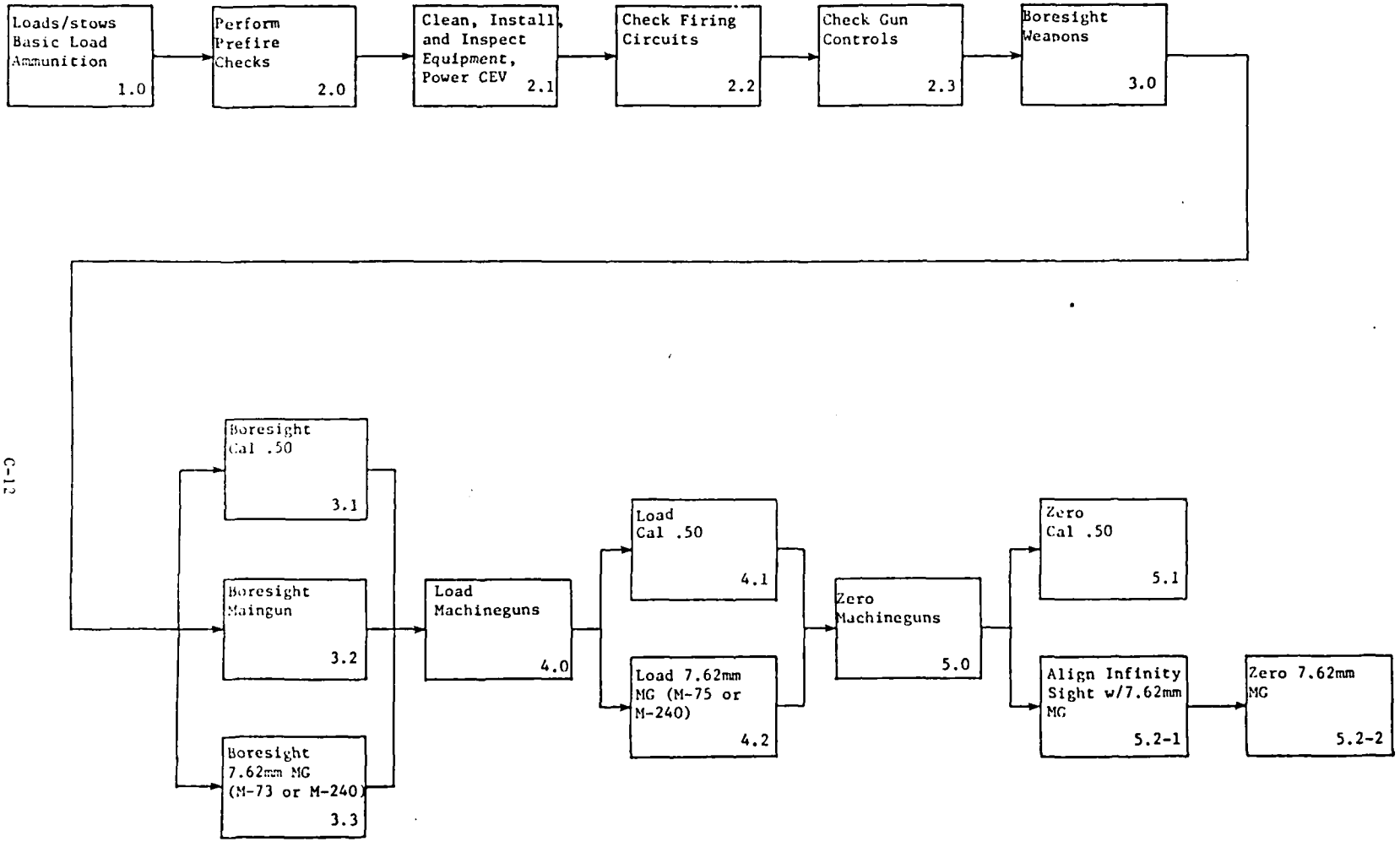
Loads/stows Basic Load Ammunition 1.0
Perform Prefire Checks 2.0
Clean, Install, and Inspect Equipment, Power CEV 2.1
Check Firing Circuits 2.2
Check Gun Controls 2.3
Boresight Weapons 3.0
Boresight Cal .50 3.1
Boresight Maingun 3.2
Boresight 7.62mm MG (M-73 or M-240) 3.3
Load Machineguns 4.0
Load Cal .50 4.1
Load 7.62mm MG (M-75 or M-240) 4.2
Zero Machineguns 5.0
Zero Cal .50 5.1
Align Infinity Sight w/7.62mm MG 5.2-1
Zero 7.62mm MG 5.2-2

Conditions: A CEV crew has been assigned a tactical mission in which use of weapons systems is anticipated.

Tank Commander						
Gunner						
Loader	Installs and secures inner 165mm rounds in ready rack (C1102.1/2) 1.0.1c	Installs and secures outer 165mm rounds in ready rack (C1102.3/4) 1.0.2c	Installs and secures 165mm rounds in the tubular stowage rack (C1102.7) 1.0.3c	Stows 6.62mm ammunition in hull and turret racks (C1104.2) 1.0.4c	Stows cal .50 ammunition in hull and turret racks (C1104.3) 1.0.5c	Stows cal .45 ammunition in turret racks (C1104.4) 1.0.6c
Driver						

Tank Commander		"Prepare to Fire" (C3001.1) 2.0.1a	Cleans turret exterior lens and vision devices (C3001.2) 2.1.1a	Checks M34 or M36 periscope (C3001.3) 2.1.2a		
Gunner			Observes loader's check of replenisher indicator tape (C2001.1) 2.1.1b	Installs, cleans, and inspects direct fire sights (C2001.2) 2.1.2b	Checks operation of ballistic shield (C2001.3) 2.1.3b	Checks instrument lights and controls (C2001.4) 2.1.4b
Loader	Stows hand grenades (C1104.5) 1.7c		Reads replenisher indicator tape and services as required (C1002.1) 2.1.1c	Inspects maingun tube (C1002.2) 2.1.2c	Check 7.62 MG mount (C1002.3) 2.1.3c	Inspects all turret hull stowed ammunition for proper stowage, complete load, and serviceability (C1002.4/9) 2.1.4c
Driver			Cleans periscopes 2.1.1d	Lowers seat 2.1.2d	Closes hatch 2.1.3d	Positions master battery switch to "ON" 2.1.4d

Tank Commander		"Check firing switches" (C3001.4) 2.2.1a		Operate T.C.'s controls during test (C3001.5) 2.2.3a	"Check gun controls" (C3001.6) 2.3.1a	Checks gun controls for power elevation and traverse (C3001.7) 2.3.
Gunner				Operates gunner's controls during test (C2001.5) 2.2.3b		Checks gun controls power pack, oil lev and equilibrator hy draulic fluid level (C2001.6) 2.3.2
Loader	Switches radios OFF during engine start (C1002.5) 2.1.5c		Installs firing circuit tester (C1002.6) 2.2.2b	Operates loader's controls during test (C1002.7) 2.2.3c		Assists w/checking of gun controls (C1002.8) 2.3.2
Driver	Starts engine 2.1.4d					

Tank Commander	"Check fire control" (C3001.8) 3.0.1a	Checks operation of Cal .50 MG mount and controls (C3001.9) 3.1.1a	Checks firing operation of Cal .50 MG (C3001.10) 3.1.2a	Removes body of M34 and M36 periscope (C3002.1) 3.1.3a	Places MG in "Safe" position and insures that gun is unloaded (C3002.2) 3.1.4a	Removes back plate, buffer group, gear assembly, and bolt assembly (C3002.3) 3.1.5
Gunner		Checks azimuth indicator for accuracy and checks elevation quadrant (C2001.7/8) 3.2.1b	Sets elevation/traverse power switch and maingun switch to OFF and master battery switch to ON. Unlocks turret traverse lock (C2006.1) 3.2.2b	Directs loader to secure boresight cord over muzzle (C2006.2) 3.2.3b	Locks breech open and installs breech boresight (C2006.3) 3.2.4b	Aligns bore with right angle corner o target using manual elevation and traverse (C2006.4) 3.2.5
Loader					Secures boresight cord over muzzle witness lines with tape (C1002.11) 3.2.4c	Assists gunner with boresighting (C1002.10) 3.2.5
Driver						

Tank Commander	Aligns center of barrel w/aiming by manually positioning the cupola and engaging the azimuth lock (C3002.4) 3.1.6a	Installs the M34 periscope and adjust elevation & traverse until 500m aiming point is aligned w/aiming point. Rotate slip scale on elevation & deflection knobs to read 4 and 4 (C3002.5) 3.1.7a	Removes M34 and install M36 periscope (C3002.6) 3.1.8a	Adjusts elevation & traverse until 500 meter aiming point is aligned w/aiming point. Rotate slip scales on elevating knobs to read 4 and 4 (C3002.7) 3.1.9a	Removes M36 body (C3002.8) 3.1.10a	Reassembles bolt assembly, buffer group, and backpla (C3002.9) 3.1.1
Gunner	Selects HEP reticle in 105F telescope and adjusts telescope reticle to aiming point and verifies bore on aiming point (C2006.5) 3.2.6b	Installs and adjusts visible light body reticle for M32C periscope. Installs IR body cover head, leaving 3/4 inch hole & adjusts reticle (C2006.6) 3.2.7b	Lays boresighted maingun on aiming point (C2002/3.1) 3.3.1b	For M-75: Sets elevation/traverse switch to OFF, verifies that gun is unloaded & safety is in "S" position (C2002.2) 3.3.2b	M-75: Loosens 3 set screws on outside collar (C2002.3) 3.3.3b	Remove electrical load from receiver receiver from jack assembly (C2002.4) 3.3.4
Loader						
Driver						

Tank Commander	Installs desired periscope body (C3002.10) 3.1.12b					
Gunner	Loosens mounting screws, jam and locking nuts for vertical and horizontal adjustments (C2002.5) 3.3.5b	Focus on aiming point w/sight side of M17A1 binoculars through bore and align bore w/aiming point (C2002.6) 3.3.6b	Tighten mounting screws, locking and jam nuts, & reassemble receiver. Reconstructs electrical lead (C2002.7) 3.3.7b	Tighten collar set screws (C2002.8) 3.3.8b	For M-240: Sets elevation/traverse switch to OFF, verifies that gun is unloaded and safety is in "S" position, ensures bolt is forward (C2002.2) 3.3.2b	M-240: Removes buffer, driver spring, mounting p slide rod, and bol assembly (C2003.3) 3.3.3b
Loader						
Driver						

Tank Commander						
Gunner	Loosens mounting nut & tightens to 1/3 turn past touching washer (C2003.4) 3.3.4b	Focus on aiming point with sight side of M17A1 binoculars through bore & align bore w/aiming point (C2003.5) 3.3.5b	Tighten mounting nut & recheck bore alignment (C2003.6) 3.3.6b	Reassemble machine gun (C2003.7) 3.3.7b	Return bolt to forward position (C2003.8) 3.3.8b	
Loader						Removes boresight cord from muzzle or maingun (C1002.11) 3.3.9
Driver						

Tank Commander		Commands, "Load machine guns" 4.0.1a	Raises cradle access door and cover assembly and latches it open (C2101.1) 4.1.1a	With bolt in rear position, checks that chamber is empty (C3101.2) 4.1.2a	Closes bolt slowly (C3101.3) 4.1.3a	Places ammunition i feed box and feeds 3 or 4 rounds into flexible chute (C3101.4) 4.1.4
Gunner	Stows tools and equipment (C2002/3.9) 3.3.11c					
Loader			Checks that traverse lock is set to "Lock", ELEV/TRAV PWR switch to OFF, and machine gun switch to OFF (C1105/6.1) 4.2.1c	For M-75: Raises receiver cover and feed tray (C1106.2) 4.2.2b	Sets safety to F (fire) and pulls charging handle to rear (C1106.3) 4.2.3b	Checks that barrel extension is back a chamber is clear, then lowers feed tr (C1106.4) 4.2.4
Driver						

Tank Commander	Feeds rounds through flexible chute and places lead round on tray w/open side of links down (C3101.5) 4.1.5a	Closes cover assembly (C3101.6) 4.1.6a				
Gunner						
Loader	Feeds ammunition belt through chute, places 1st round in feed tray w/1st round over slot in feed tray (C1106.5) 4.2.5b	Closes cover and checks that cover latch is forward (C1106.6) 4.2.6c	For M-240: Pull charger handle to rear and sets safety to S (safe) (C1105.2) 4.2.2c	Raises cover and feed tray and checks that chamber is clear. Lowers feed tray. (C1105.3) 4.2.3c	Feeds ammunition belt through chute, places 1st round in tray w/ open side of link down, and pushes a-gainst cartridge stop (C1105.4) 4.2.4c	Closes latch and locks cover, and checks that latches are locked (C1105.5) 4.2.5c
Driver						

Tank Commander	Operates charger handle to recharge gun, places safety in the "S" position (C3101.7/8) 4.1.7a	Orders "Report" (C3001.14) 2.0.2a	Orders, "Driver move to firing range" 5.0.1a		Orders "Zero machine guns" 5.0.3a	Uses M34 or M35 per scope to lay gun on 500 meter aiming point by traversing and elevating cupol (C3003.1) 5.1.1
Gunner		Replys, "Gunner Ready" (C2001.10) 2.0.2b				Lays 7.62mm MG on aiming point at 500 meters (C2004.1) 5.2-1.
Loader		Replys, "Loader Ready" (C1002.13) 2.0.2c				
Driver		Reply "Driver Ready" 2.0.2d		Driver maneuvers CEV to firing range and positions CEV on firing line 5.0.2d		

Tank Commander	Fires a 10 to 20 round burst (C3003.2) 5.1.2a	Checks lay on gun after firing and re-adjusts to aiming point if necessary (C3003.3) 5.1.3a	Without moving gun lay, adjusts periscope deflection & elevation until 500 meter aiming point is at center of burst strike area (C3003.4) 5.1.4a	Fires another 10 to 20 round burst to confirm zero (C3003.5) 5.1.5a	Repeats procedure for other periscope (C3003.6) 5.1.6a	If preparing for nigl engagements, verifie: nonballistic reticle aiming point of M36 periscope by firing burst at same target dusk or with searchl illumination (C3003.7) 5.1.7
Gunner	Sets master battery switch and infinity toggle switch to ON & adjusts infinity reticle brightness (C2004.2) 5.2-1.2b	Adjusts infinity reticle in elevation & azimuth to align reticle w/aiming point (C2004.3) 5.2-1.3b	Lays 7.62mm gun on 600 meter aiming point using M32C periscope (C2005.1) 5.2-2.1b	Adjusts light intensity of infinity sight reticle (C2005.2) 5.2-2.2b	Fires 20-25 round burst (C2005.3) 5.2-2.3b	Without disturbing g lay, uses infinity sight boresight knob to center strike are in the reticle (C2005.4) 5.2-2.4b
Loader						
Driver						

Tank Commander	Announces, "Cal .50 zeroed" 5.1.8a					
Gunner	Lays gun again to aiming point and fires another 20-25 round burst (C2005.5) 5.2-2.5b	Repeats process until burst is inside sight reticle (C2005.6) 5.2-2.6b	Announces, "Coax zeroed" 5.2-2.7b			
Loader						
Driver						

Engagement of Targets With 165mm Gun From Predetermined Firing Position

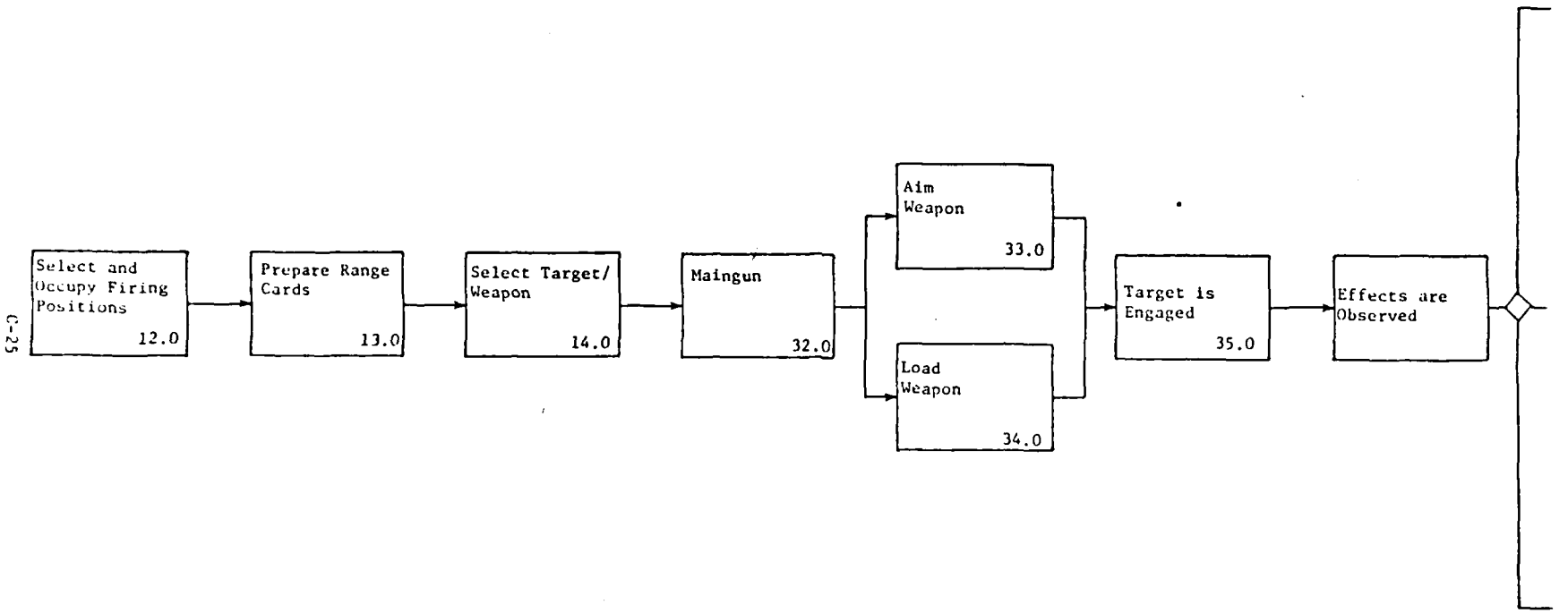

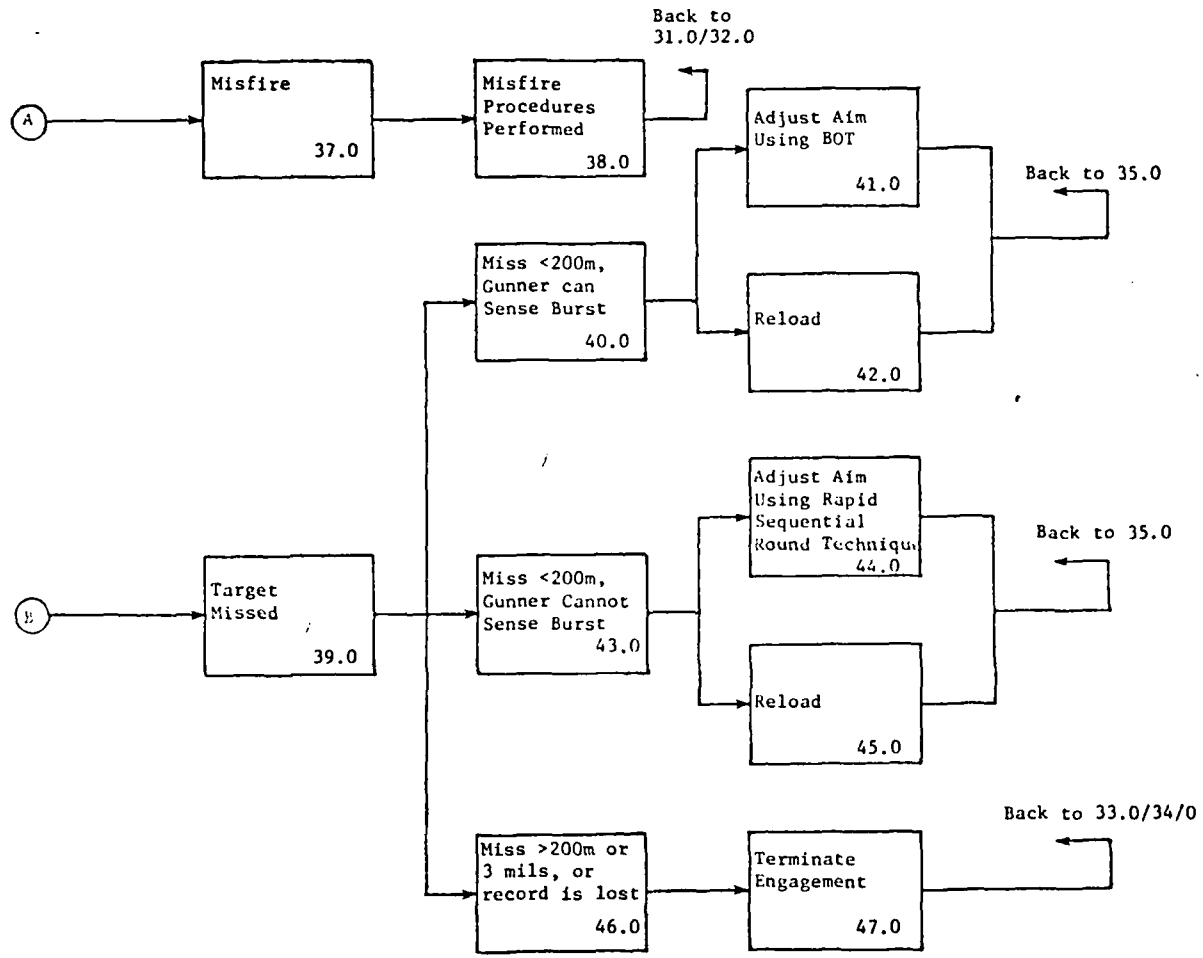
A
Misfire
37.0
Misfire Procedures Performed
38.0
Back to 31.0/32.0
Adjust Aim Using BOT
41.0
Back to 35.0
Miss <200m, Gunner can Sense Burst
40.0
Reload
42.0
B
Target Missed
39.0
Miss <200m, Gunner Cannot Sense Burst
43.0
Adjust Aim Using Rapid Sequential Round Techniqu
44.0
Back to 35.0
Reload
45.0
Miss >200m or 3 mils, or record is lost
46.0
Terminate Engagement
47.0
Back to 33.0/34/0

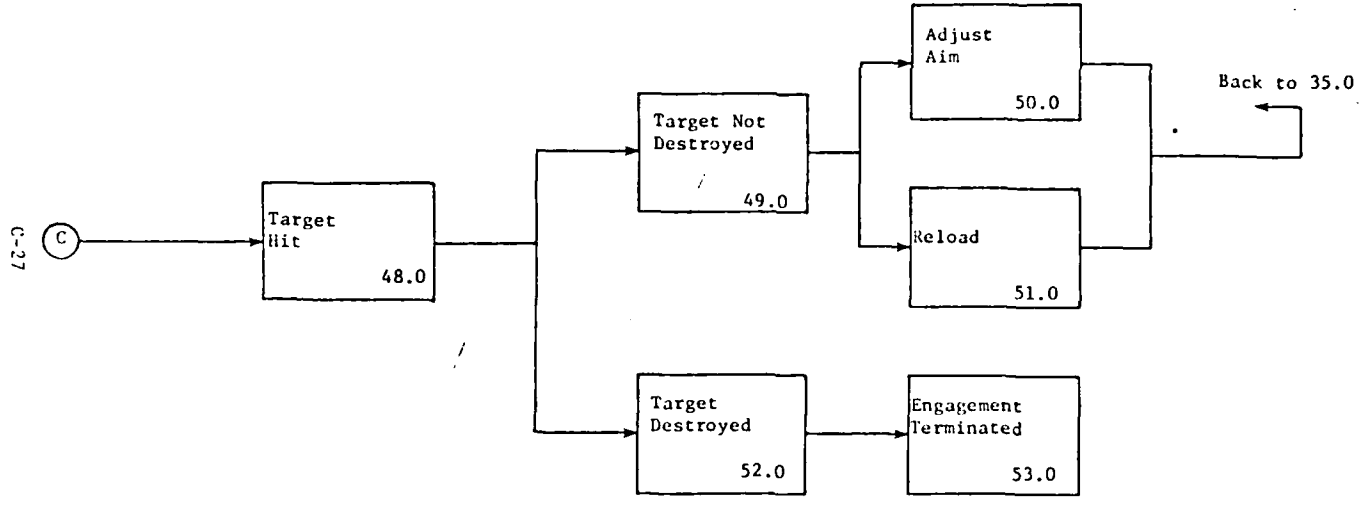
C
Target Hit
48.0
Target Not Destroyed
49.0
Adjust Aim
50.0
Reload
51.0
Back to 35.0
Target Destroyed
52.0
Engagement Terminated
53.0

Conditions: A CEV has been assigned the mission of guarding a particular sector of responsibility to deny enemy the use of transportation routes (bridges, tunnels, roads, etc.) or concealment (buildings, etc.)

Tank Commander	Considers sector of responsibility, observation and fields of fire, and cover and concealment (C3202.1-3) 12.1a	Selects primary position, alternate positions and secondary positions (C3202.4-6) 12.2a	Designates firing position to driver & designates route to firing position (C3203.1/2) 12.3a		When required, dismounts and guides vehicle into position using proper arm and hand signals (C3203.3/4) 12.5a	
Gunner						
Loader						
Driver				Maneuvers CEV to firing position (C1201.1/2) 12.4d		Selects hull down position and stops vehicle on most leve. ground available (C1201.3/4) 12.6d

Tank Commander	Prepares sketch map of target area using military and map symbols (C3201.1) 13.1a	Selects reference point in coordination with gunner (C3201.2) 13.2a	Azimuth indicator is zeroed on reference point (C3201.3) 13.3a	Reference point is plotted on range card (C3201.4) 13.4a	Targets are identified on range card (C3201.5) 13.5a	Target deflection is recorded (C3201.6) 13.6a
Gunner		Selects reference point in coordination with T.C. (C2201.1) 13.2b	Azimuth indicator is zeroed on reference point (C2201.2) 13.3b	Reference point is plotted on range card (C2201.3) 13.4b	Targets are identified on range card (C2201.4) 13.5b	Target deflection is recorded (C2201.5) 13.6b
Loader						
Driver						

Tank Commander	Target range is recorded (C3201.7) 13.7a	Quadrant elevation for gun is recorded (C3201.8) 13.8a	Quadrant elevation for searchlight is recorded (C3201.9) 13.9a	CEV's sector of responsibility is recorded (C3201.10) 13.10a	Marks range card for appropriate firing position (primary, alternate, secondary) 13.11a	Announces "Gunner HEP, Tunnel (bridge etc.)" (C3301.2/3) 14.1
Gunner	Target range is recorded (C2201.6) 13.7b	Quadrant elevation for gun is recorded (C2201.7) 13.8b	Quadrant elevation for searchlight is recorded (C2201.8) 13.9b	CEV's sector or responsibility is recorded (C2201.9) 13.10b	Marks range card for appropriate firing position (primary, alternate, secondary) (C2201.10) 13.11b	
Loader						
Driver						

Tank Commander				Determines target deflection from range card and announces deflection to gunner (C3302.3) 33.4a		Verifies deflection read back by gunner. Determines quadrant elevation from range card and announces t. gunner (C3302.4/5) 33.6a
Gunner	Ensures turret power is ON (C2302.1) 33.1b	Main gun switch power to ON (C2302.1) 33.2b	Looks through sights to acquire target 33.3b		Traverses to announced deflection & reads back deflection (C2302.2) 33.5b	
Loader	Sets maingun safety switch to "SAFE" (C1103.1) 34.1c	Opens breechblock and checks that chamber is empty and clean; swabs breech if necessary (C1103.2) 34.2c	Returns operating handle on breechblock to locked position (C1103.3) 34.3c	Removes projectile from rack, places projectile on breech-block rollers, inserts and seats round (C1103.4) 32.4c	Detaches and removes handle from round and closes breechblock (C1103.5/6) 34.5c	Sets main gun switch to "Fire", positions self clear of recoil path, and announces "Up" (C1103.7/8) 34.6c
Driver						

Tank Commander		Verifies elevation as read back by gunner. Orders "Fire at my command,"...,"Fire!" (C3302.5/ C3301.7) 33.8a/35.1a				
Gunner	Sets quadrant elevation on quadrant and zeros bubble, reads back quadrant elevation (C2302.3) 33.7b		Announces, "On the way" and presses firing trigger (C2302.4) 35.2b	Announces "Misfire" (C2101.1) 37.1b	Keeps muzzle trained on target and personnel clear of muzzle and recoil path (C2101.2/3) 38.1b	Attempts to fire by operating gunner and TC hand control trigger, manual elevation firing button and the manual firing handle (C2101.4) 38.2b
Loader						
Driver						

Tank Commander					Orders "Evacuate CEV" 38.7a	
Gunner	Waits 2 minutes after last attempt to fire, and then directs loader to unload round (C2101.5) 38.3b					Bails out 38.8b
Loader		Opens breechblock and attempts to unload round (C1101.2) 38.4c	If weapon is too hot waits additional 2 minutes and unloads round (C1101.3) 38.5c	If weapon is still too hot to unload, informs T.C. (C1101.4) 38.6c		Bails out 38.8c
Driver						Bails out 38.8d

Tank Commander						Announces, "Short, BOT" "Long, BOT" 40.1a
Gunner	If round does not "cook off" and after after weapon has cooled, has loader re-enter CEV and unload round (C2101.8) 38.9b		Directs loader to place unfired round a safe distance from vehicles and all personnel (C2101.9) 38.11b		Insures that round is properly marked, and EOD is notified for disposal of round (C2101.10) 38.13b	Announces, "Short BOT" or "Long BOT" (C2305.2) 40.1
Loader		Unloads round (C1101.6) 38.10c		Places round where directed (C1101.7) 38.12c		
Driver						

Tank Commander			Announces "Short" or "Over" (C3304.2) 43.1a	Correct deflection by announcing direction and mils (e.g., "Left-2" or "Right-3" (C3304.3) 44.1a		Correct elevation b announcing directio and meters (e.g., "Drop 50" or "add 100") (C3304.4) 44.3a
Gunner	Uses location of bust as BOT aiming point (C2305.2) 41.1b	Repositions gun so that BOT aiming point is on target (C2305.4) 41.2c			Receive change in deflection in mils, reposition gun in deflection (C2306.1) 44.2b	
Loader	Reloads as described in 34.0 and announces "Up" (C1103.1-8) 42.1-6c			Reloads gun as described in 34.0 & announces "Up" (C1103.1-8) 45,1-6c		
Driver						

Tank Commander		Announces "Short", "Over," or "Lost" (C3304.2) 46.1a	Commands, "Cease fire" (C3304.7) 47.1a			Sees target is destroyed and commands, "Cease Fire" (C3304.7) 52.1a/53.
Gunner	Receive change in range in meters if HE reticle is being used & reposition gun so that center of target is at new range in sight reticle (C2306.2/3) 44.4b	Announces "Short," "Over" or "Lost" (C2306.2) 46.1b		Observes hit on target and searches for undamaged portion 49.1b	Adjusts aim so that aiming point is on undamaged portion of target 50.1b	
Loader					Reloads as described in 34.0 and announces "Up" (C1103.1-8) 51.1-6c	
Driver						

Tank Commander						
Gunner						
Loader	Sets maingun safety switch to SAFE 53.2c					
Driver						

Engagement of Targets W/165mm Gun as Part of Maneuver Force

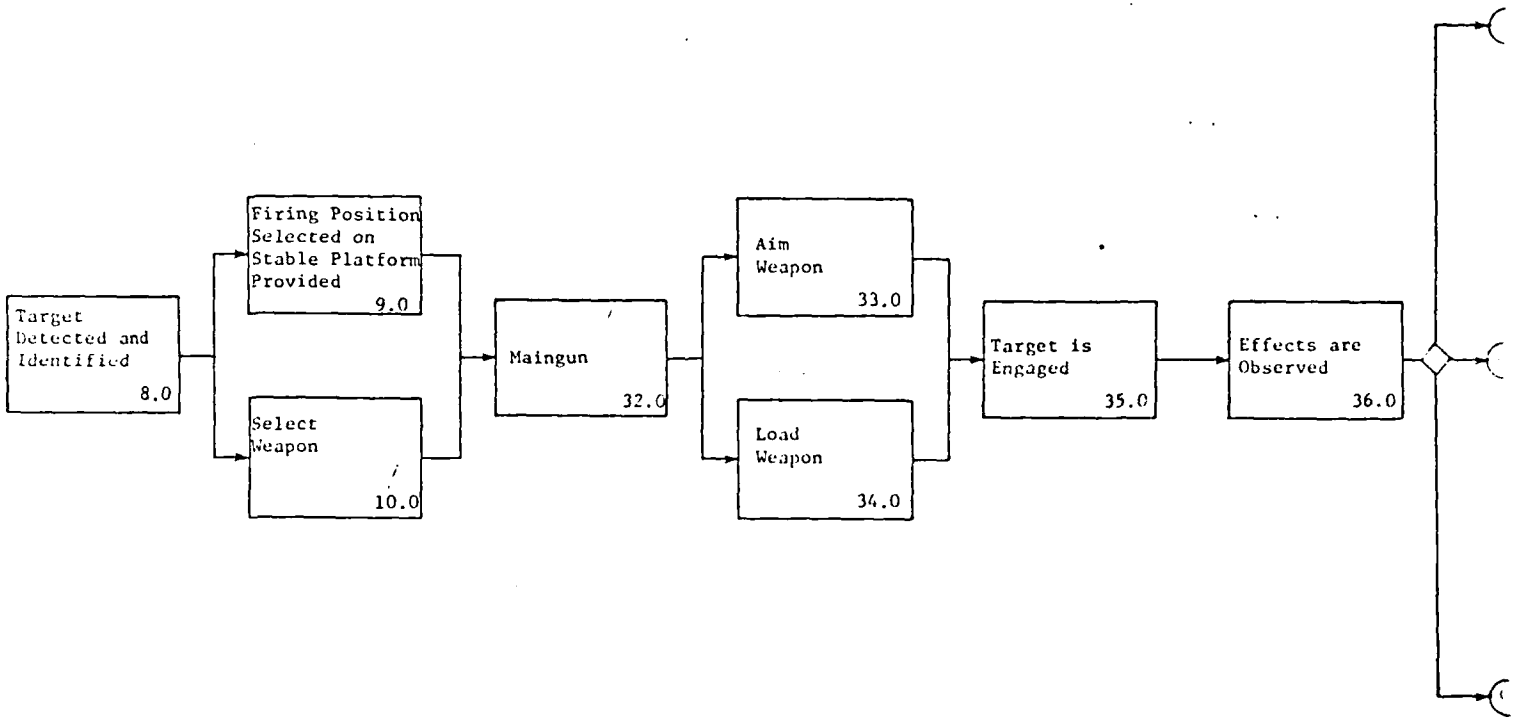

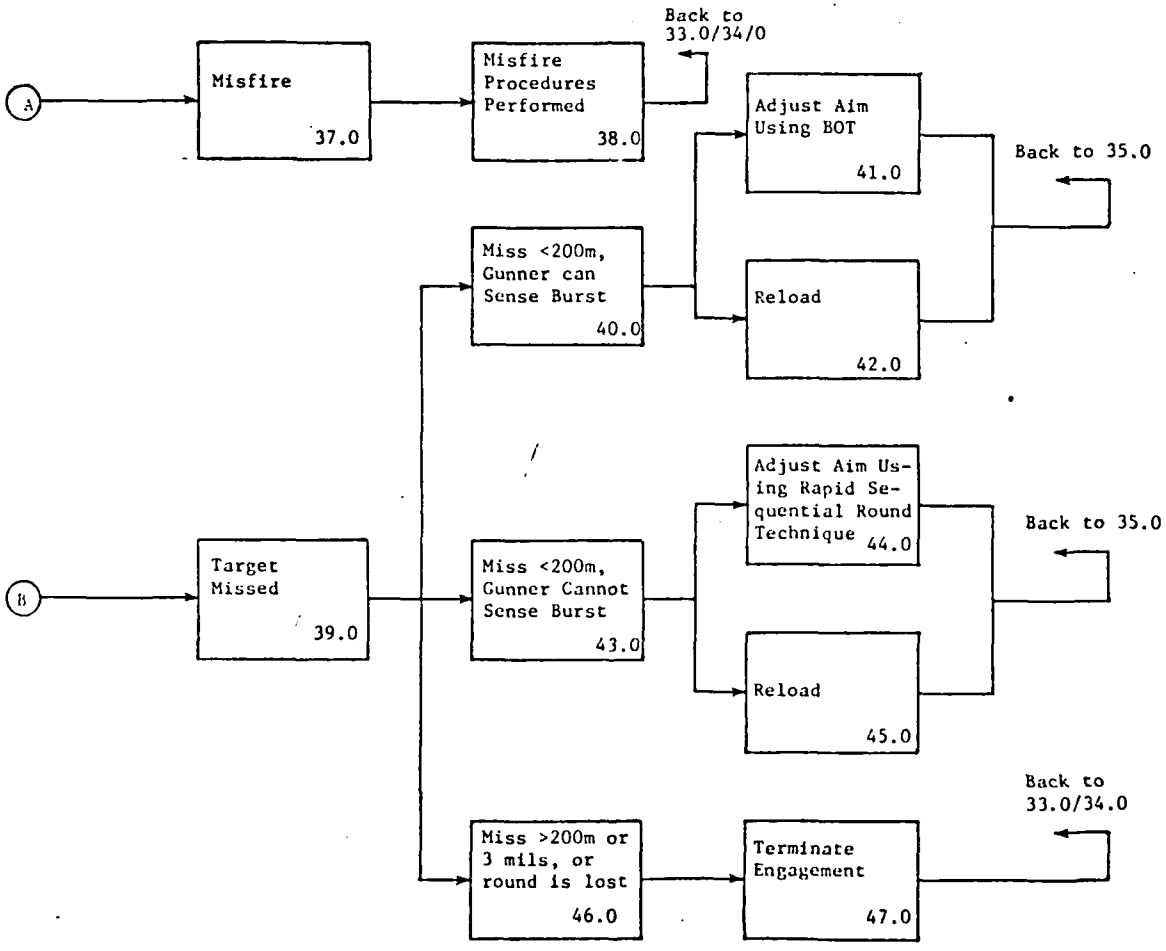
A
Misfire
37.0
Misfire Procedures Performed
38.0
Back to 33.0/34/0
Adjust Aim Using BOT
41.0
Back to 35.0
Miss <200m, Gunner can Sense Burst
40.0
Reload
42.0
B
Target Missed
39.0
Miss <200m, Gunner Cannot Sense Burst
43.0
Adjust Aim Using Rapid Sequential Round Technique
44.0
Back to 35.0
Reload
45.0
Miss >200m or 3 mils, or round is lost
46.0
Terminate Engagement
47.0
Back to 33.0/34.0

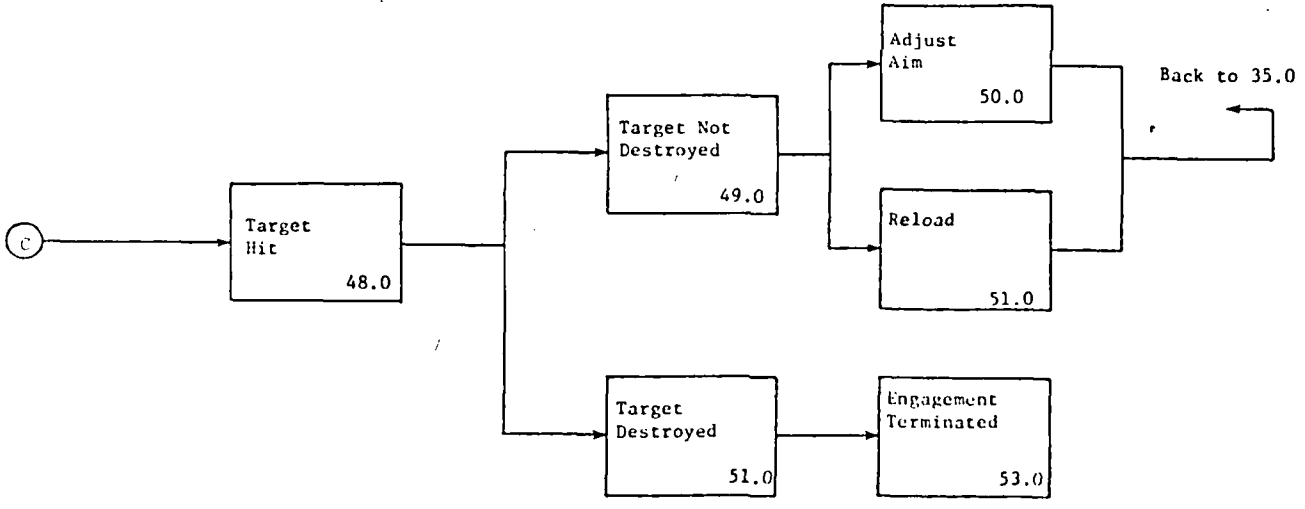
C
Target
Hit
48.0
Target Not
Destroyed
49.0
Target
Destroyed
51.0
Adjust
Aim
50.0
Reload
51.0
Engagement
Terminated
53.0
Back to 35.0

Conditions: In a CEV as part of a tank unit, targets requiring engagement by 165mm gun are encountered. Targets are detected and identified by tank crews or troops. CEV is called up.

Tank Commander	Detects and identifies target 8.1a		Announces, "Gunner HEP, Bunker (or other description of target)" (C3301.1-2) 10.1a/30.1a			
Gunner	Detects and identifies target 8.1b	Describes target and position to T.C. 8.2b		Ensures turret power is on (C2301.1) 10.2b	Sets maingun power switch to "ON" (C2301.2) 10.3b	Looks through sights to locate target (C2301.3) 31.1b
Loader	Detects and identifies target 8.1c	Describes target and position to T.C. 8.2c		Checks turret ring to ensure it is not locked (C1301.3) 10.1c		Sets maingun safety switch to SAFE)C11-3.1) 32.1c
Driver	Detects and identifies target 8.1d	Describes target and position to T.C. 8.2d		Selects best firing position and best route to position or acknowledges position selected by T.C. (C1301.1/ C1201.3) 9.1d	Maneuvers vehicle into position, selects hull down position on most level ground available, positions CEV w/hull oriented to target (C1201.1,4,5/ C1201.1) 9.2d	

Tank Commander		Orders "Traverse _____" (right or left) (C3301.4) 33.2a		Orders "Steady" (C3301.4) 33.4a		Calls "ON" (C3301.4) 33.6a
Gunner			Traverses gun in direction ordered (C2301.4) 33.3b		Slows rate of traverse (C2301.5) 33.5b	
Loader	Opens breech fully, and checks that chamber is empty & free of debris (C1103.2) 32.2c	Returns operating handle to locked position (C1103.3) 34.3c	Removes round from ready rack, places projectile on breech-block rollers, inserts and seats round (C1103.4) 34.4c	Detaches and removes handle from round (C1103.5) 34.5c	Closes the breech-block (C1103.6) 34.6c	Returns maingun safety switch to FI and stands clear of recoil path (C1103.7) 34.7c
Driver						

Tank Commander	Determines target range by: 1. Use of laser range-finder on accompanying tank 2. Use of binoculars & WORM formula 3. Use of Cal .50. 4. Estimation using football field as base (C2304.1-6) 33.7a	Announces, "Range ____ meters" (to nearest 25 meters) (C3301.5) 33.8a		Orders, "Fire at my command, Fire" (C3301.7) 35.1a		
Gunner	Stops traverse and searches for target when visually identified announces "Identified" (C2301.5) 33.7b		Elevates gun to obtain correct sight picture and alignment (C2301.6) 33.9b		Announces, "On the way", and presses trigger (C2301.7) 35.2b	Announces "Misfire" (C2101.1) 37.1b
Loader	Announces, "Up" (C1103.8) 34.8c	Prepares to reload (C1301.5) 34.9c				
Driver						

Tank Commander						
Gunner	Keeps muzzle trained on target and personnel clear of muzzle and recoil path (C2101.2/3 38.1b	Attemps to fire by operating gunner and TC hand control trigger, manual elevation firing button & the manual firing handle (C2101.4) 38.2b	Waits 2 minutes after last attempt to fire, and then directs loader to unload round (C2101.5) 38.3b			
Loader				Opens breechblock and attempts to unload round (C1101.2) 38.4c	If weapon is too hot waits additional 2 minutes and unloads round (C1101.3) 38.5c	If weapon is still too hot to unload, informs T.C. (C1101.4) 38.6c
Driver						

Tank Commander	Orders "Evacuate CEV" 38.7a					
Gunner		Bails out 38.8b	if round does not "cook off" and after weapon has cooled, has loader re-enter CEV and unload round (C2101.8) 34.9b		Directs loader to place unfired round a safe distance from vehicle and all personnel (C2101.9) 38.11b	
Loader		Bails out 38.8c		Unloads round (C1101.6) 38.10c		Places round where directed (C1101.7) 38.12c
Driver		Bails out 38.8d				

Tank Commander		Announces, "Short, BOT" "Long, BOT" 40.1a			Announces, "Short" or "Over" (C3304.2) 43.a	Correct deflection b announcing direction & mils (e.g., "Left- or Right-3" (C3304.3) 44.1a
Gunner	Insures that round is properly marked, and BOD is notified for disposal of round (C2101.10) 38.13b	Announces, "Short, BOT" or "Long, BOT" (C2305.2) 40.1b	Uses location of bust as BOT aiming point (C2305.2) 41.1b	Repositions gun so that BOT aiming point is on target (C2305.4) 41.2c		
Loader			Reloads as described in 34.0 and announces "Up" (C1103.1-8) 42.1-6c			Reloads gun as described in 34.0 & announces "Up" (C1103.1-8) 45.1-6c
Driver						

Tank Commander		Correct elevation by announcing direction & meters (e.g., "Drop 50" or "add 100") (C3304.4) 44.3a		Announces "short," "over", or "lost" (C3304.2) 46.1a	Commands, "Cease fire" (C3304.7) 47.1a	
Gunner	Receive change in deflection in mils, reposition gun in deflection (C2306.1) 44.2b		Receive change in range in meters if HEP reticle is being used & reposition gun so that center of target is at new range in sight reticle (C2306.2/3) 44.4b	Announces, "short", "over", or "lost" (C2306.2) 46.1b		Observes hit on target and searches for undamaged porti 49.1
Loader						
Driver						

Tank Commander		Sees target is destroyed and commands, "Cease Fire" (C3304.7) 52.1a/53.1a				
Gunner	Adjusts aim so that aiming point is on undamaged portion of target 50.1b					
Loader	Reloads as described in 34.0 and announces "Up" (C11-3.1-8) 51.1-6c		Sets maingun safety switch to SAFE 53.2c			
Driver						

Engage Targets W/Searchlight From Predetermined Positions

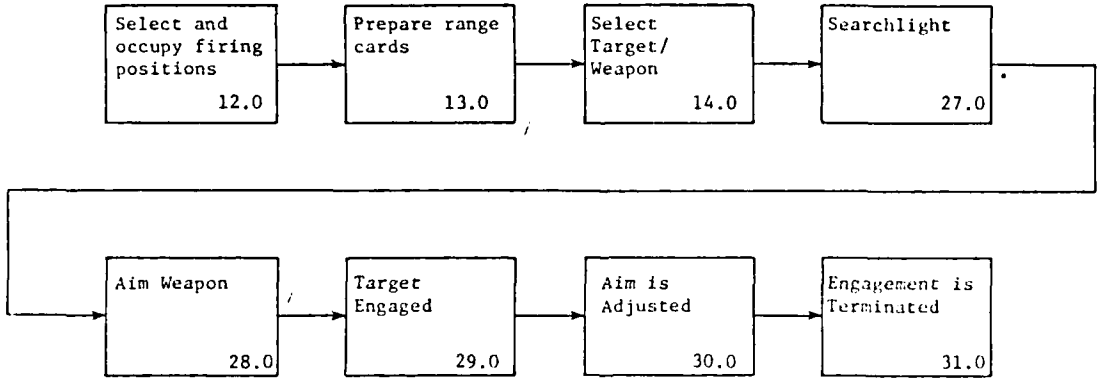

Conditions: A CEV has been assigned the mission of guarding a particular sector of responsibility to deny enemy the use of transportation routes (bridges, tunnels, roads, etc.) or concealment (buildings, etc.)

Tank Commander	Considers sector of responsibility, observation and fields of fire, and cover & concealment (C3202.1-3) 12.1a	Selects primary position, alternate positions, and secondary positions (C3202.4-6) 12.2b	Designates firing position to driver and designates route to firing position (C3203.1/2) 12.3a		When required, dismounts and guides vehicle into position using proper arm and hand signals (C3203.3/4) 12.5a	
Gunner						
Loader						
Driver				Maneuvers CEV to firing position (C1201.1/2) 12.4d		Selects hull down position and stops vehicle on most level ground available (C1201.3/4) 12.6d

(C-30)

Tank Commander	Prepares sketch map of target area using military and map symbols (C3201.1) 13.1a	Selects reference point in coordination with gunner (C3201.2) 13.2a	Azimuth indicator is zeroed on reference point (C3201.3) 13.3a	Reference point is plotted on range card (C3201.4) 13.4a	Targets are identified on range card (C3201.5) 13.5a	Target deflection is recorded (C3201.6) 13.6a
Gunner		Selects reference point in coordination with T.D. (C2201.1) 13.2b	Azimuth indicator is zeroed on reference point (C2201.2) 13.3b	Reference point is plotted on range card (C2201.3) 13.4b	Targets are identified on range card (C2201.4) 13.5b	Target deflection is recorded (C2201.5) 13.6b
Loader						
Driver						

Tank Commander	Target range is recorded (C3201.7) 13.7a	Quadrant elevation for gun is recorded (C3201.8) 13.8a	Quadrant elevation for searchlight is recorded (C3201.9) 13.9a	CEV's sector of responsibility is recorded (C3201.10) 13.10a	Marks range card for appropriate firing position (primary, alternate, secondary) 13.11a	Communicates w/ adjacent tank or CEV to determine target to be illuminated & type of illumination required (C3301.1) 14.1a
Gunner	Target range is recorded (C2201.6) 13.7b	Quadrant elevation for gun is recorded (C2201.7) 13.8b	Quadrant elevation for searchlight is recorded (C2201.8) 13.9b	CEV's sector of responsibility is recorded (C2201.9) 13.10b	Marks range card for appropriate firing position (primary, alternate, secondary) (C2201.10) 13.11b	
Loader						
Driver						

Tank Commander	Identifies target on range card (C3303.1) 14.2a	Orders, "Gunner-White Light" or "Blacklight" depending on type required (C3303.2) 14.3a/27.1a		Determines target deflection from range card and announces deflection to gunner (C3303.3) 28.2a		Verifies deflection read back by gunner (C3303.5) 28.4a
Gunner			Turns turret power to ON (C2303.1) 28.1a		Traverses to announced deflection, reads back deflection (C2303.2) 28.3b	
Loader						
Driver						

Tank Commander	Determines quadrant elevation from range card and announces to gunner (C3303.4) 28.5a		Verifies quadrant elevation read back by gunner (C3303.5) 28.7a	Sets controls on AN/USS-1 control box for desired illumination (C3303.6) 29.1a	Orders "Fire" and turns on searchlight (C3303.7) 29.2a	
Gunner		Sets quadrant elevation on quadrant, zeros bubble, reads back quadrant elevation (C2303.3) 28.6b				Moves searchlight beam to center of target (C2303.4) 29.3b
Loader						
Driver						

Tank Commander	Calls adjustment of searchlight as needed (C3303.8) 30.1a		When adjacent vehicle completes firing, commands, "Cease Fire" and turns off searchlight 31.1a			
Gunner		Adjusts aim of searchlight as directed by T.D. (C2303.5) 30.2b				
Loader						
Driver						

Engage Aerial Targets w/Cal .50 Machinegun

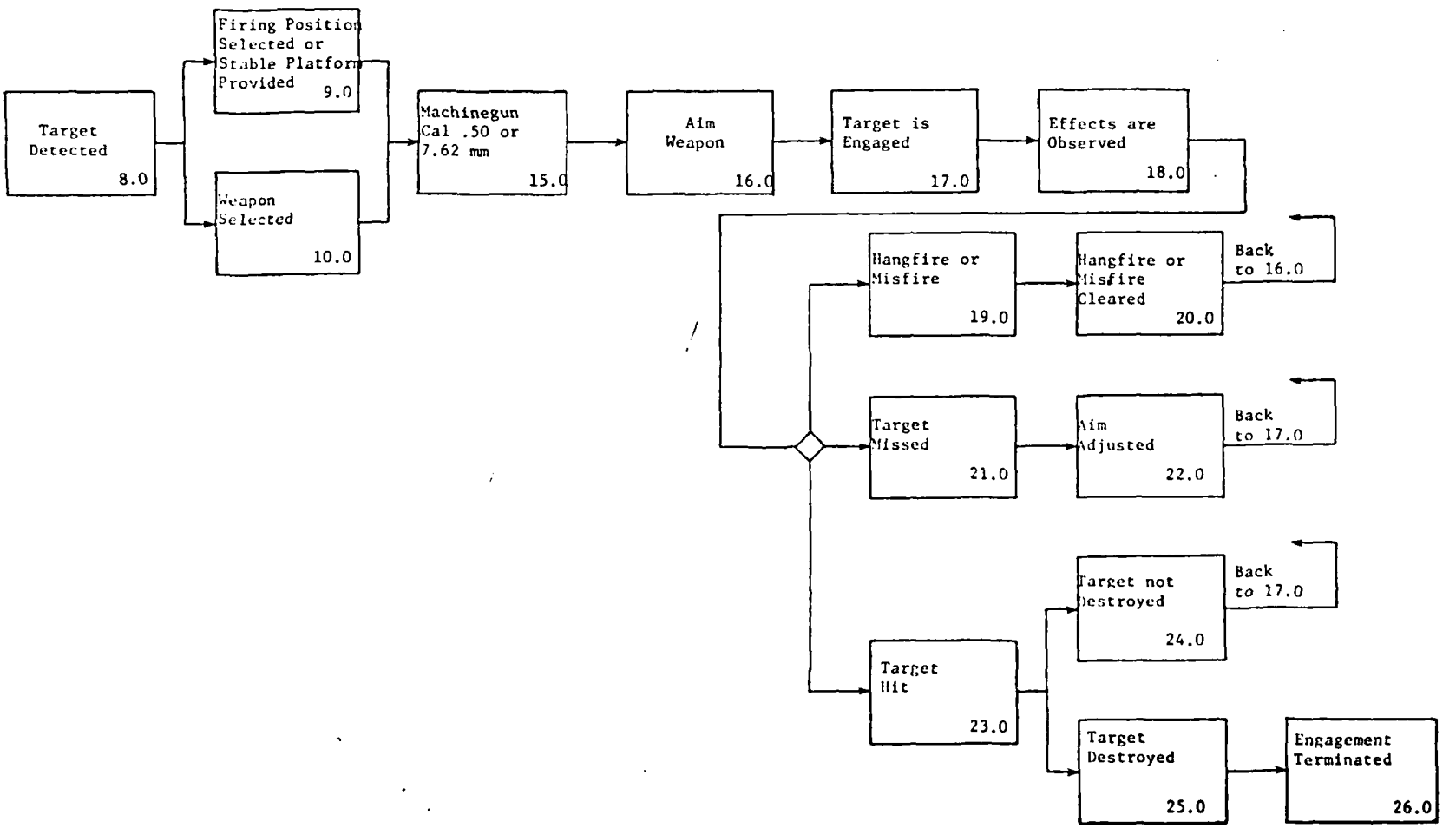

Conditions: As crew in a CEV, unit or supported unit is under aerial attack, nearby air defense weapon engages target or target meets hostile criteria.

Tank Commander	Aerial target detected and identified as hostile 8.1a	Announces "Caliber .50" (C3306.1) 10.1a/15.1a	Sets cupola power ON, safety switch to FIRE and rate switch to HIGH (C3306.2) 10.2a	Aims above and in front of target and fires a continuous burst until target flies through cone of fire (C3306.3) 16.1a/17.1a	If weapon is cold; keep weapon trained to target, wait 5 seconds for possible hangfire (C3102.1/2) 20.1a	Retract bolt and press trigger (C3102.3) 20.2a
Gunner	Aerial target detected and identified as hostile 8.1b					
Loader	Aerial target detected and identified as hostile 8.1c					
Driver	Aerial target detected and identified as hostile 8.1d	Stops CEV 9.1d				

Tank Commander	If weapon fails to fire, wait another 5 seconds and retract bolt (C3102.4) 20.3a	Open cover and remove ammunition (C3102.5) 20.4a	Determine cause of stoppage, correct, reload, and continue engagement (C3102.6) 20.5a	OR If weapon is hot; wait 5 seconds for possible hangfire (C3102.7) 20.1a	Retract bolt and press trigger (C3102.8) 20.2a	If gun does not fir open cover and unlo ammunition within 5 seconds (C3102.9) 20.3a
Gunner						
Loader						
Driver						

RS-3

Tank Commander	If gun cannot be unloaded within 5 seconds, let bolt go forward, close cover and wait 15 minutes before reloading (C3102.10) 20.4a	If second stoppage occurs after clearing, repeat clearing procedures (C3102.11) 20.5a	If a third stoppage occurs, wait 5 seconds, unload gun and troubleshoot (C3102.12) 20.6a	Continue to reposition and fire using cone of fire technique until target is destroyed or out of range (C3306.4) 22.1a/24.1a	Announces "T.C. Complete," and places safety switch to SAFE (C3306.5/6) 26.1a	
Gunner						
Loader						
Driver						

Engage Ground Targets w/Cal .50 Machinegun

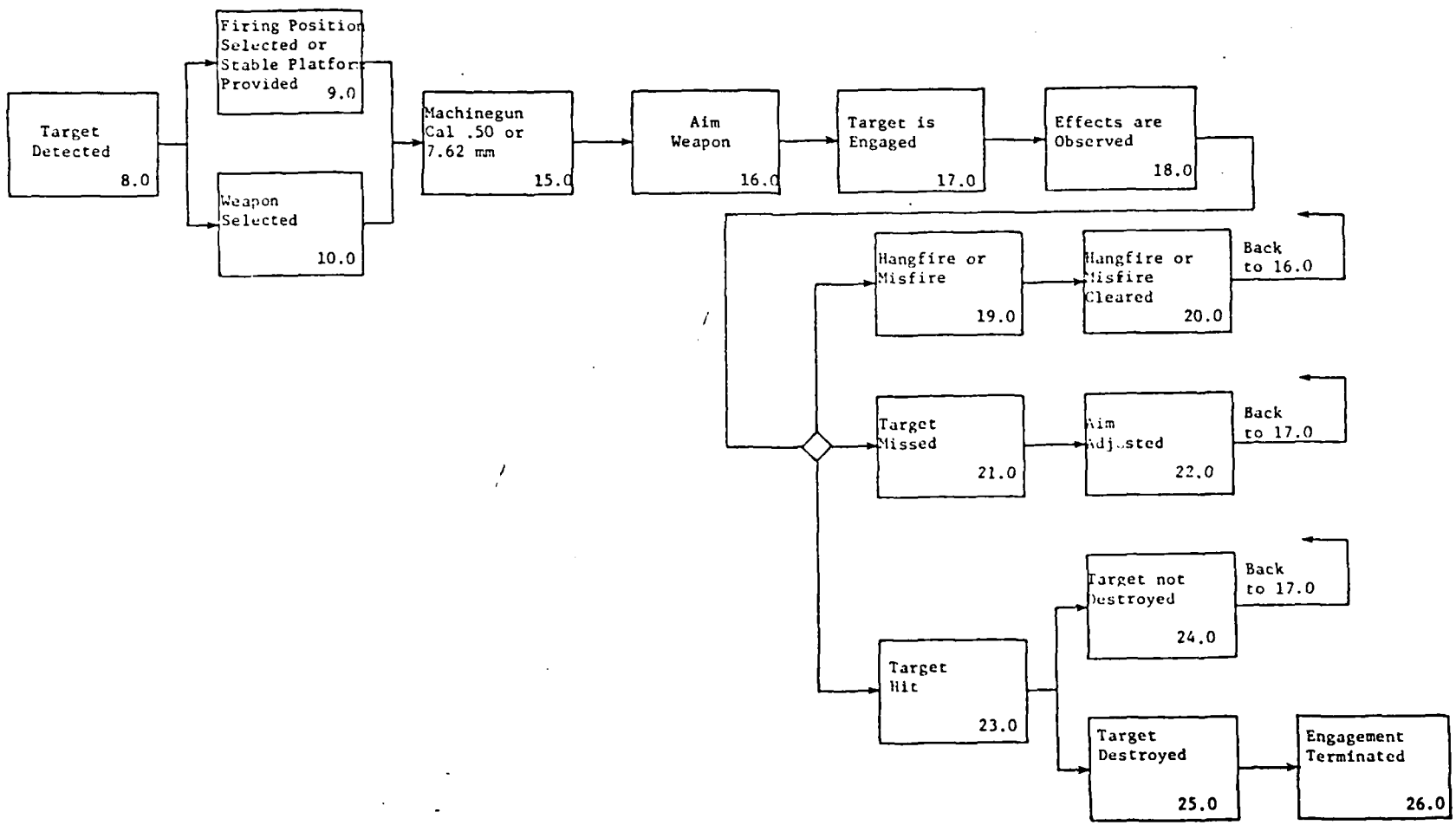

Condition: As crew of a CEV, given a CEV ground targets appropriate for engagement with Cal .50 MG are encountered

Tank Commander	Detects and identifies target 8.1a	Announces "Cal .50" (C3305.1) 10.1a/15.1a	Sets cupola power switch to "ON", safety to "FIRE", and rate of fire switch to "LOW" (C3305.2) 10.2a	Estimates target range and lays gun on that range line in M36 reticle, using azimuth and elevation controls for cupola (C3305.4) 16.1a	Fires 10 to 15 round bursts in low rate (C3305.4) 17.1a	If weapon is cold; keep weapon trained to target, wait 5 seconds for possibl hangfire (C3102.1/2) 20.1a
Gunner	Detects and identifies target, informs T.C. 8.1b					
Loader	Detects and identifies target. Informs T.C. 8.1c					
Driver	Detects and identifies a target. Informs T.C. 8.1d		Slows or stops CEV depending on whether target is point or area type 9.1d			

Tank Commander	Retract bolt and press trigger (C3102.3) 20.2a	If weapon fails to fire, wait another 5 seconds and retract bolt (C3102.4) 20.3a	Open cover and remove ammunition (C3102.5) 20.4a	Determine cause of stoppage, correct, reload, and continue engagement (C3102.6) 20.5a	OR If weapon is hot; wait 5 seconds for possible hangfire (C3102.7) 20.1a	Retract bolt and press trigger (C3102.8) 20.2a
Gunner						
Loader						
Driver						

Tank Commander	If gun does not fire, open cover and unload ammunition within 5 seconds (C3102.9) 20.3a	If gun cannot be unloaded within 5 seconds, let bolt go forward, close cover and wait 15 minutes before reloading (C3102.10) 20.4a	If second stoppage occurs after clearing, repeat clearing procedures (C3102.11) 20.5a	If a third stoppage occurs, wait 5 seconds, unload gun and troubleshoot (C3102.12) 20.6a		Adjusts fire by "walking" tracers into target area (C3305.5) 22.2a
Gunner					Senses rounds, adjusts fire by calling "a little short", "a little to the right," etc. 22.1b	
Loader					Senses rounds, adjusts fire by calling "a little short", "a little to the right," etc. 22.1c	
Driver						

Tank Commander	Adjusts aim to continue destruction of target 24.1a	Terminates engagement by announcing "T.C. complete" when target is destroyed or out of range (C3305.6) 7.1a	Places safety switch to "OFF". (C3305.7) 7.2a			

Engagement of Targets w/7.62mm Coax Machinegun

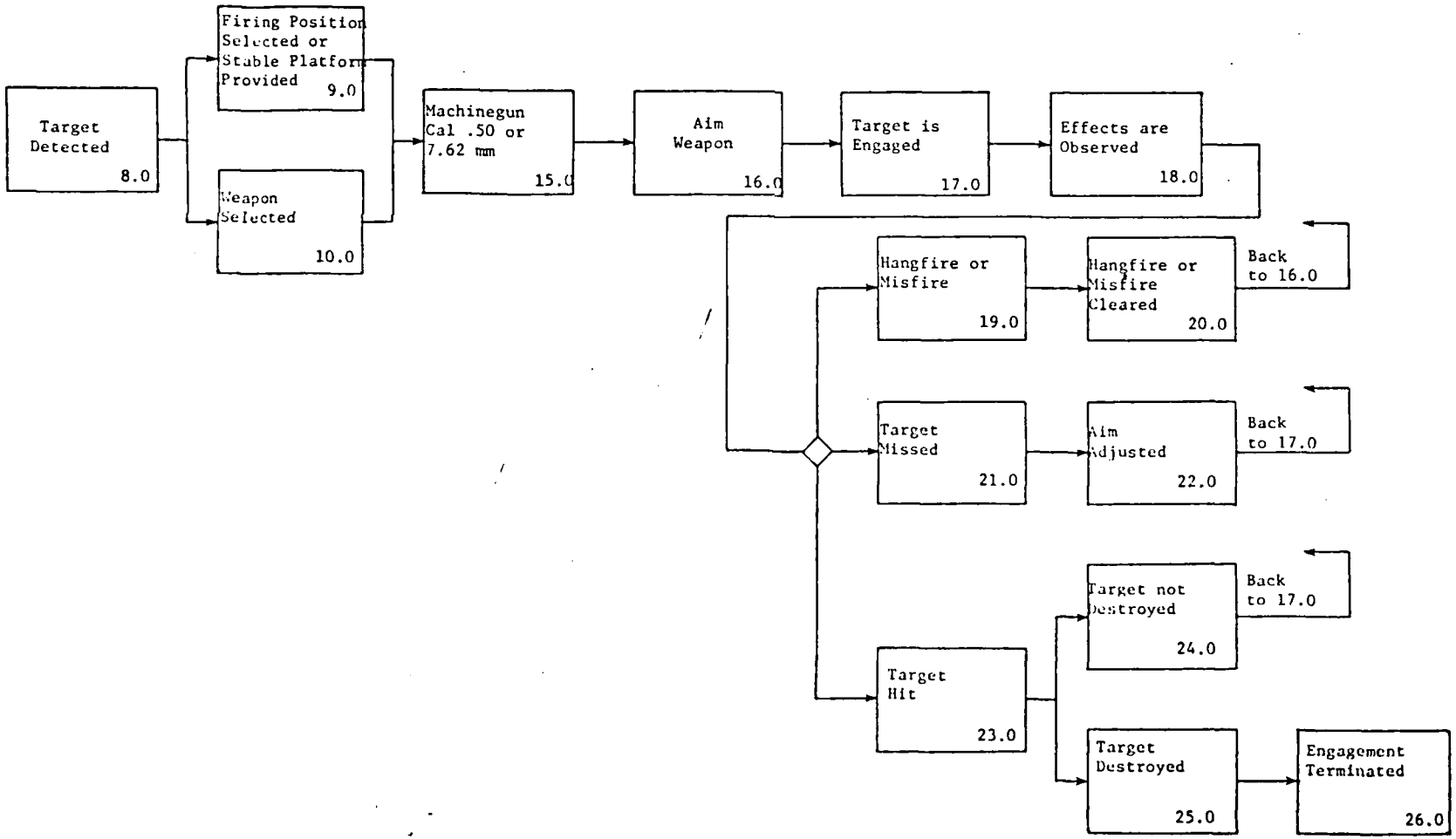

Conditions: As crew of a CEV, given a CEV, a target requiring engagement by the 7.62mm M6 is encountered.

Tank Commander	"Gunner-Coax-Truck-Too-Traverse right" (C2201.1,2,3,4,5) 8.1a/10.1a/15.1a/16.1a	"Driver, slow" or "Driver, take position at _____" 9.1a	Calls, "steady" as gunner closes on target (C3301.4) 16.3a		Calls "on" when gunner is aligned w/target (C3301.4) 16.5a	
Gunner	Sets turret power and machinegun switches to "ON" (C2307.1) 15.1b	Traverses turret to right		Slows rate of traverse 16.4b		Stops traverse of turret and says "identified" when target is sighted (C2307.2) 16.6b
Loader	Checks that turret ring is not obstructed (C1304.1) 15.1c	Checks that weapon is charged and ready & safety is in "Fire" position (C1304.2) 15.2c	Insures the 3-4 inches of slack is between ammunition box and receiver (C1304.3) 15.3c	Announces "UP" (C1304.4) 15.4c		
Driver			Slows vehicle to provide a stable firing platform, or maneuvers smoothly into firing position selected by T.C. (C1303.2/3) 9.1d	Searches to detect target and other targets (C1303.4) 8.2d		

Tank Commander		Announces, "Fire at my command,"... "Fire!" (C3301.7) 17.1a				
Gunner	Sights target using M32C telescope w/HEP reticle. Estimates range & adjusts azimuth & elevation (C2307.3/4) 16.7b		Announces "on the way" and commences firing in 20-25 round bursts (C2307.5/6) 17.2b	Announces "Misfire" 19.1b		
Loader					If gun is cold, waits 5 seconds (C1107.1) 20.1c	Pulls back charging handle and pulls trigger (C1107.2) 20.2c
Driver						

Tank Commander						
Gunner						
Loader	If gun stops again, waits 5 seconds and unloads. Sets safety to "F", pulls charger handle to rear & lets handle go forward slowly while pressing trigger (C1107.3) 20.3c	Loads gun and trys to fire manually. If gun stops again, waits 5 seconds, unloads and trouble-shoots (C1107.4) 20.4c	OR If gun is hot, waits 5 seconds (C1107.5) 20.1c	Pulls back charging handle and pulls trigger (C1107.5) 20.2c	If gun stops again, waits 5 seconds and trys to unload within 5 seconds (C1107.6) 20.3c	If gun cannot be unloaded within 5 seconds, lets bolt go forward, closes cover, and points gun in safe direction for 15 minutes to cool (C1107.7) 20.4c
Driver						

Tank Commander	Observes impact of rounds, adjusts fire by saying "up a little," "right a little," etc. (C3301.9) 22.1a			Commands "Cease fire" when target is destroyed or out of range (C3301.9) 26.1a		
Gunner		Alters aiming point based on commands of T.C. (C2307.7) 22.2b	Alters aiming point to continue destruction of target 24.1b		Stops firing. Turns machinegun switch to OFF (C2307.8) 26.2b	
Loader	Ensures that 3-4 inches of slack is maintained between the ammunition box and the receiver (C1304.4) 22.1c				Places weapon in "Safe" position (C1304.5) 26.2c	
Driver						

APPENDIX D

D-PAC COSTING GUIDE

D-PAC COSTING GUIDELINE

Introduction

The objective of the following costing guideline is to lead an analyst through a series of steps that will lead to an estimate of the cost of developing, acquiring, and operating a DORAC. Factors that are considered in estimating the total cost of the capability include the following:

1. Facilities--Physical assets (buildings, land, etc.) required for the implementation and support of a DORAC system.

2. Equipment--Hardware directly associated with evaluation positions and their support.

3. Materials--Software (user materials, films, texts, computer programs, etc.) necessary for the conduct and support of DORAC evaluations.

4. Personnel--Evaluator and evaluatee costs incurred as a *direct* result of DORAC evaluation activities (e.g., salaries, travel, per diem, expendable supplies, etc.).

The first step in costing a DORAC is to specify the exact nature of each alternative; that is, to list the devices required, the planned number of evaluations per year, and support requirements in terms of operators, evaluators, and maintenance personnel; and so forth. Then, for each training device comprising part of an alternative and for the baseline alternative, the following series of steps is completed:

Step 1. Compute Anticipated Facility Load (AFL)

a. Specify Annual Evaluation Frequency (AEF), the number of times each evaluatee must be evaluated annually using the device.

b. For the device, specify the Evaluation Cycle Size (ECS), the number of evaluation positions that can be used simultaneously.

c. Identify Organization Evaluation Unit Size (OEUS), the evaluatee group size (e.g., individual, squad, platoon, company, etc.) organic to the base organization (e.g., battalion, brigade, division, post, etc.) that most closely matches, without exceeding, the ECS.

d. Specify the number of Evaluatees per Organization (E/O), the total number of personnel within the base organization that the evaluation is applicable to.

e. Compute Organizational Evaluations (OE), the number of evaluation cycles required to process one base organization:

$$OE = \frac{E/O}{OEUS} . \quad (A-1)$$

f. Compute Base Facility Load (BFL), the number of evaluations required to put all relevant base organizations (N_{org}) through one evaluation cycle:

$$BFL = N_{org} \times OE, \quad (A-2)$$

where N_{org} is the number of base organizations scheduled to undergo evaluation.

g. Compute Estimated Facility Load (EFL), the expected number of evaluation cycles to process all base organizations on all evaluations:

$$EFL = BFL \times AEF. \quad (A-3)$$

h. Determine the expected number of re-evaluation (RE) cycles:

$$RE = PLE \times EFL, \quad (A-4)$$

where PLE is the estimated percentage of lost evaluations.

i. Finally, compute AFL, the expected number of evaluation cycles required to process all evaluatees, plus expected re-evaluations:

$$AFL = RE + EFL. \quad (A-5)$$

Step 2. Compute Device Capability (DC)

a. Determine Work Segment Length (WSL), the length of time in hours between work starts and stops during the work day.

b. Specify the Number of Work Segments (NWS), the number of WSL periods per work day.

c. Estimate Evaluation Cycle Length (ECL), the anticipated time in hours required to conduct one evaluation cycle using the device.

d. Estimate Time Between Cycles (TBC), time in hours spent in orientation briefing, data collection, or critique.

e. Compute the number of Evaluation Cycles per Day (EC/D) (rounded to nearest integer):

$$EC/D = \frac{WSL \times SN}{ECL + TBC} . \qquad (A\text{-}6)$$

f. Estimate Time Device Available (TDA), the number of training days per year the device is expected to be operational (round to nearest day):

$$TDA = PTA \times TDY, \qquad (A\text{-}7)$$

where PTA is the percentage of time the device is expected to be available,

and TDY is the number of training days per year.

g. Compute Device Capability (DC), the expected number of evaluation cycles per year that one device will accommodate:

$$DC = TDA \times (EC/D). \qquad (A\text{-}8)$$

Step 3. Compute the Number of Devices Required (NDR):

$$NDR = AFL/DC. \qquad (A\text{-}9)$$

Step 4. Determine Incremental Acquisition Cost of Device (ACD)

a. Compute Device Hardware Cost (DHC), the cost of acquiring the required number of devices (above the number required solely for training):

$$DHC = (NDR - NDOH) \times UCD, \qquad (A\text{-}10)$$

where NDOH is the number of devices on hand for training purposes,

and UCD is the unit cost of the device.

b. Determine Direct Personnel Costs (DPC). DPC is the sum of the estimated number by proposed pay grade of operators, evaluators, and maintenance personnel multiplied by their salaries and benefits. Again, this is the incremental cost associated with providing personnel for purely evaluation purposes.

c. Determine evaluation-related Personnel Training Costs (PTC):

$$PTC = CIT + EFT, \quad \text{(A-11)}$$

where CIT is the cost of initial training for operators, evaluators, and maintainers;

and EFT is the expected cost of follow-on training (if any) plus the cost of training replacements for the initial cadre.

d. Compute Administrative Operating Costs (AOC):

$$AOC = EXS + TC, \quad \text{(A-12)}$$

where EXS is the cost of data recording supplies, office supplies, facilities supplies, equipment supplies, utilities, ammunition, targets, and so forth associated with evaluation activities,

and TC is the cost of any required travel for evaluatees or cadre (again, evaluation related).

e. Estimate Facilities Cost (FC). FC is the total cost of required acquisition, construction, or modification for device-related facilities used solely for evaluation.

f. Estimate Annual Maintenance Cost (AMC), the annual cost of maintaining device-related facilities used solely for evaluation.

g. Compute ACD:

$$ACD = DHC + (DPC + AOC + AMC) \times EY + PTC + FC, \quad \text{(A-13)}$$

where EY is the expected life of the device.

Step 5. Determine Total Device Cost (TDC):

$$TDC = ACD + EEIR \times DHC \times EY, \qquad \text{(A-14)}$$

where EEIR is the expected replacement rate (percentage) per year for end item equipment used for evaluation purposes.

Step 6. Determine Total Estimated Cost of Alternative (TECA):

After the estimated cost of each device constituting a DORAC alternative is calculated, these costs are summed to produce the Total Estimated Cost of the Alternative (TECA):

$$TECA = \sum_{i=1}^{NDEV} TDC_i, \qquad \text{(A-15)}$$

where NDEV is the number of individual devices constituting DORAC alternative i,

and TDC_i is the estimated cost of the ith device (from A-14).

The application of (A-15) in determining the total estimated cost of alternative i makes the assumption that all individual device costs are mutually exclusive; that is, no shared costs (e.g., common operators, evaluators, facilities, etc.) are involved. In the event that shared costs are involved, assign the overlapping costs to one device. In this manner, shared costs are only counted one time.