AD-A174 330 COMPARISON OF THE TSAR (THEATER SIMULATION OF AIRBASE RESOURCES) MODEL TO (U) AIR FORCE INST OF TECH WRIGHT-PATTERSON AFB OH SCHOOL OF SYST D R NOBLE 1/1

UNCLASSIFIED SEP 86 AFIT/GLM/LSM-86S-54 F/G 1/3 NL

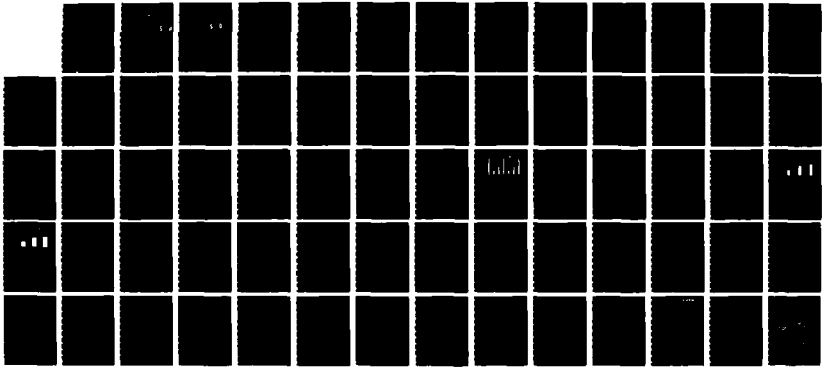

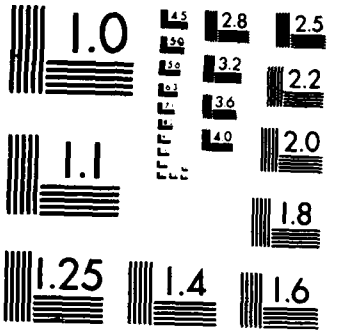

(2)

COMPARISON OF THE TSAR MODEL

TO THE LCOM MODEL

THESIS

David R. Noble
Captain, USAF

AFIT/GLM/LSM/86S-54

DEPARTMENT OF THE AIR FORCE
AIR UNIVERSITY
AIR FORCE INSTITUTE OF TECHNOLOGY

Wright-Patterson Air Force Base, Ohio

(2)

AFIT/GLM/LSM/86

COMPARISON OF THE TSAR MODEL TO THE LCOM MODEL

THESIS

David R. Noble
Captain, USAF

AFIT/GLM/LSM/86S-54

AFIT/GLM/LSM/86S-54

COMPARISON OF THE TSAR MODEL TO THE LCOM MODEL

THESIS

Presented to the Faculty of the School of Systems and Logistics

of the Air Force Institute of Technology

Air University

In Partial Fulfillment of the

Requirements for the Degree of

Master of Science in Logistics Management

David R. Noble, B.S.

Captain, USAF

September 1986

Preface

The purpose of this study was to begin the process of demonstrating the utility of the TSAR model to the Air Force manpower requirements analysts. In particular, the study aimed to show whether or not TSAR outputs could match those of the LCOM model, which has been a standard for manpower requirements forecasts for many years.

Results of the comparison were inconclusive from a statistical standpoint, due primarily to incomplete coordination of the two model inputs. Man-hour outputs from TSAR showed consistently lower totals than did LCOM, at the same sortie tasking. At the same time, TSAR was able to simulate completion of a greater percentage of the assigned sorties. Qualitative differences between TSAR and LCOM were noted. TSAR has generally poorer data input and output, due to the lack of pre- and post-processors.

In performing the experimentation and writing this thesis, I am indebted to the support of many others. I would especially like to thank my faculty advisor, Lt Col John Halliday for his tireless support and encouragement. I also wish to thank Mr. Richard Cronk and Mr. Elliot Wunsh of Aeronautical Systems Division for their patience and guidance in teaching LCOM to me. I most especially want to thank my wife Irene for being there when I needed her.

David R. Noble

Table of Contents

Page

List of Figures

List of Tables

Abstract

A comparison was made between the outputs of TSAR and LCOM. Each model was run with a F-16 database representing peacetime maintenance procedures at a single base. Since TSAR is a wartime model, modifications to the TSAR database were made in an attempt to make the models compatible. Simulation runs were made using three flying schedules, representing 1.0, 2.0, and 3.0 sortie rate taskings. Sortie production and man-hour outputs from like TSAR and LCOM runs were compared. Statistical comparison of the outputs showed TSAR sortie production figures and man-hour outputs varied significantly from those given by LCOM. Results were biased by the lack of completely compatible databases, but there was some evidence to suggest that a fairly constant factor represented the difference in outputs. In the course of the study, qualitative differences in the models were noted. These differences impacted the comparative ease of use of the models and their suitability to specific applications. TSAR is generally more difficult to use, in both input and output preparation and usage, but has greater power across a wide range of options. Development of TSAR pre- and post-processors is suggested as a way to improve ease of input and utility of output.

COMPARISON OF THE TSAR MODEL TO THE LCOM MODEL

I. Introduction

Issue

Does the Theater Simulation of Airbase Resources (TSAR) model give forecasts of aircraft maintenance requirements that are comparable to the "standard" forecasts provided by the Logistics Composite (LCOM) model? This question is of interest to analysts at Headquarters, United States Air Force (HQ USAF); the Air Force Manpower and Personnel Center (AFMPC); Headquarters, Air Force Logistics Command (HQ AFLC); the Aeronautical Systems Division (ASD) and at other locations around the Air Force (AF) (15).

Background. The military uses a variety of computer simulation models to project manpower, spare part and other resource needs (2:7-8; 17:2). LCOM and TSAR are examples of military simulation models designed to forecast resource needs.

Both LCOM and TSAR are Monte Carlo, discrete-event simulation models (1: 7,44; 6: Sec 2; 8: 1) . Both have as a basic objective investigation into how the interrelations of numerous resources impact the operation of a weapon system (6: Sec 1, 1; 8:1). LCOM simulates and analyzes ". . . support resources usage (personnel, equipment, spare parts, etc.) and the impact of their availability on the

operational status of the weapon system . . ." (6: Sec 2,1). Likewise TSAR ". . . analyzes the interrelations among available resources . . to generate aircraft sorties . . ." (8:1). In other words, the models simulate the activities associated with the operation of a weapon system. For example, TSAR considers 11 different resource types associated with generating aircraft sorties (1) aircraft, (2) aircrews, (3) ground personnel, (4) support equipment (AGE), (5) aircraft parts, (6) aircraft shelters, (7) munitions, (8) tanks, racks, adaptors and pylons (TRAP), (9) petroleum, oils and lubricants (POL), (10) building materials, and (11) airbase facilities (8:1). LCOM simulates a similar but slightly smaller list of resources (6: Sec 2).

The models process a series of user identified tasks that correspond to the actual requirements of weapon system operation. Some of these tasks may be probabalistic, that is, occurring only as the result of some random event. Simulation models, in general, handle probabalistic events by drawing a random number from a random number generator, and modifying it to fit the desired probability distribution (1: 256). The size of the resulting number is compared to the stated probability of an event occurring. The appropriate action, either to process or to skip the event, is taken, as a result of that comparison. Both LCOM and TSAR use random numbers, although their generation and specific uses vary (6: 9). Other tasks may be designated so as to be processed routinely (100% probability of occurrence) at some step in

the simulation cycle. The user may elect to change the defined tasks, in an attempt to identify the costs and benefits of alternative modes of operation.

The user may also specify that certain resources are necessary for the completion of a task. Those resources may be consumed by the task or they may be returned to a pool for future use, after completion of the assigned task. The user may vary the availability of resources in order to investigate the sensitivity of the system to that particular resource or combination of resources.

The differences between LCOM and TSAR revolve around the advanced state of development of LCOM (as compared to TSAR) and the expanded list of activities and resources that TSAR can simulate.

LCOM-Unique Capabilities. LCOM enjoys wide use within the Air Force and has been adapted to perform a number of different functions (6: Sec 2 ,1-2). Through many years of development (4), LCOM has gained a variety of functions dedicated to simplifying input and combining output into more useable forms (6: Sec 2, 2-4). TSAR, being a much newer creation, does not have as great a library of support functions. For instance, LCOM uses a pre-processor. This allows the user to format input data in a highly understandable form. The pre-processor then takes the data and prepares it for use in the simulation. The output of the preprocessor is much more complex and difficult for the user to comprehend, but is in the form necessary for submission to

the main module (simulation). TSAR does not yet have a preprocessor, although development is underway (4), therefore it suffers in comparison to LCOM in ease of data input.

TSAR-Unique Capabilities. TSAR has the capability to simulate a much broader set of options than does LCOM (8: 2). for instance, TSAR users can simulate the operation of a single airbase, several independent airbases, or a set of interdependent airbases. LCOM is presently limited to single airbase operations. TSAR can also model the effects of conventional or chemical airbase attacks, the effects of having personnel operate in individual chemical protection equipment (IPE), and the efforts to reconstitute the airbase following an attack. LCOM has none of these options. TSAR gives the user the ability to model the activities within an entire theatre of operations, under wartime conditions. Thus activities such as lateral support between bases can be assessed. Within each base, TSAR provides a wider span of activites, thereby allowing the user to assess the added capabilites or restrictions imposed by such support functions as civil engineering and air traffic control.

Other Differences. Since LCOM has been used for such a long time, it has been repeatedly validated, that is, had its results compared against real world airbase operations (4). Because of its long use, flexibility and demonstrated validity, LCOM has become institutionalized as an accepted resources determination tool. LCOM has some limitations, however. First, LCOM is written in SIMSCRIPT and

therefore requires a computer system with a SIMSCRIPT compiler (12:10). This can greatly reduce the choice an agency has in buying a computer system, if they intend to use LCOM to do requirements forecasting or other capability assessments (15). Also, LCOM model runs take a very long time to complete, often forcing the analyst to do runs late at night when computer utilization is low (4). For these reasons, and to overcome LCOM's limitations in modeling important wartime concepts, the TSAR model was developed, in lieu of modifying LCOM to incorporate multi-base and combat scenarios.

TSAR has also undergone successful validation, but not to the extent LCOM has. TSAR is written in FORTRAN (10:v), which is one of the most common computer languages (14). Availability of a FORTRAN compiler is rarely a factor in the choice of a computer system (14). FORTRAN is also a more efficient language, from the point of view of computer speed, and therefore, TSAR simulations are much faster than similar LCOM runs (15). On the other hand, TSAR can only model a 2-shift, wartime maintenance arrangement as opposed to the 3-shift arrangement common in peace-time operations (15). While TSAR is gaining acceptance as a useful model within those areas where it supplements LCOM (21), it has not been institutionalized within the AF, i.e., there is no single agency responsible for TSAR development and maintenance. LCOM, on the other hand, is "owned and operated" by the AF Manpower community (15).

Rationale for Model Comparisons. Since LCOM has limitations in what situations it can model (10:2), analysts are searching for alternatives to its use (15). While TSAR includes many useful extensions that LCOM lacks (8), analysts are reluctant to use it exclusively because its ability to match the forecasting ability and suitability of LCOM, in those areas where the two models duplicate capability, has yet to be proven (15). As a result, analysts are faced with the undesirable prospect of having to maintain both models in order to get useable forecasts across the full range of aircraft maintenance and airbase activities. This is undesirable because both models are large and complex, requiring a lot of upkeep. For example, a simple TSAR task (card type (CT) #5) contains up to 26 pieces of data describing the type of task to be performed, the probability of its occurrence, the length of the task, the number and kinds of resources used for the task, the location of subsequent and parallel tasks, the distributions of probabalistic events, such as task length, and other data (9:46). In the TSAR database used in this study, there are 972 CT #5s (19), meaning that this very simple database (15) has the potential for needing up to 25,272 (26 X 972) separate pieces of data for inclusion in the CT #5s alone. Although, no single CT #5 is likely to contain all 26 possible pieces of data, the total number of data is quite large, especially considering CT #5s comprise only about one half of the total database used in this study (20). In addition, each model de-

mands separate training for users and different computer capabilities (10:v). In short, maintaining both models results in a great deal of duplication, which is costly and inefficient. If users had proof that TSAR's outputs were comparable to LCOM's, TSAR could be used exclusively, in most applications (15).

Problem Statement

The specific question this study will address is: Does TSAR provide acceptable man-hour usage and sortie production forecasts when the daily sortie rate requirement is varied across representative levels? Acceptable is operationally defined as being statistically equivalent, within a specified confidence interval, of the forecasts provided by LCOM.

Rationale for Problem Statement Limitations. Both the LCOM and TSAR models simulate the full range of activity within an aircraft maintenance organization (8; 10; 12). In addition, TSAR has the capability to model across several maintenance organizations scattered across a theater-wide area, plus the ability to handle enemy actions (8; 12). This means each model can take hundreds of inputs, process them through innumerable permutations of the networks and provide hundreds of output data (10; 12). Clearly it is beyond the scope of a single research effort to evaluate the TSAR model across the entire spectrum of its capability. The thrust of this study is to analyze two selected outputs, with limited inputs, in order to get a representation of how closely TSAR matches LCOM. Man-hour usage figures were

chosen because use of the models for manpower analyses is one of their principal purposes (15). The sortie production statistic was chosen because it directly reflects the level of maintenance activity undertaken.

Research Objectives

In addition to the specific problem identified, this study will address the following research questions.

1. What differences exist between LCOM and TSAR simulations?
2. In what ways must TSAR be manipulated to give acceptable forecasts?
3. If TSAR fails to provide acceptable forecasts, are there apparent shortcomings in TSAR that can be economically overcome?

Network Differences. There are a number of differences in the networks between LCOM and TSAR (10). The thrust of research question number 1 is to identify what, if any, of these differences are of consequence to the user, how they affect the use of TSAR and what, if anything can be done to limit the impact of those differences.

Manipulations. TSAR has a great capacity for the model user to tailor the simulation to suit. For instance, the probability distributions of chance occurences can be specified by the user (10). Question number 2 deals with what particular manipulations the user may need to specify in order for TSAR to adequately emulate LCOM.

Shortcomings. Even if TSAR fails to give acceptable forecasts in its present form, the economies achieved by reducing the requirement to maintain both models may make it

feasible to modify TSAR to give acceptable forecasts. The goal of research question number 3 is to identify where TSAR falls short in matching LCOM outputs, and to explore possibilities for relatively simple and inexpensive modifications to TSAR that would improve its forecasts.

Experimental Hypotheses

The overall purpose of this study is to test the proposition that TSAR and LCOM outputs are functionally the same.

Because of the limitations of the study, the actual proposition to be tested is:

> TSAR and LCOM man-hour usage and sortie production outputs are functionally the same, when the target daily sortie rate is varied.

Scope of the Research

In order to deal with the complexity of the LCOM and TSAR models, limitations are imposed in each of two areas related to the simulations: inputs and outputs.

Input Limitations. The inputs to the models will be the same for each model. The input values correspond to a maintenance data base for the F-16 tactical fighter. The only input that will be varied is the target daily sortie rate. See appendix A.

Output Limitations. The only outputs of the models that will be considered for comparison are the man-hour usage and sortie production outputs. See appendix B.

Summary

Written information about the rationale for this study is limited. Rather the bulk of the justification comes from the users (4; 7; 15; 21). TSAR provides important extensions to LCOM (10:2) and these extensions are unlikely to be matched by further modification of the LCOM networks (4). In addition, TSAR is written in the commonly available FORTRAN general purpose computer language (10:v) while LCOM is written in the harder-to-find SIMSCRIPT specialized simulation language (12:10). This means that TSAR is more portable, since computer systems that have FORTRAN compilers are common. It also makes suitable operating systems easier and cheaper to find (15). If belief in TSAR is warranted, analysts would be well-served by embracing TSAR as a general-purpose, requirements, resource allocation and capability assessment model replacing LCOM.

Definition of Terms

Air Force Specialty Code. An air force specialty code (AFSC) is defined as: a numerical code designating the career-field specialty of the individual. For the purposes of this study, AFSCs designate the particular skills used as manpower resources in the simulations. For example, AFSC 30470 represents a ground radio maintenance technician.

Network. A network is defined as: a block of computer code in the simulation program designed to represent a particular system or sub-system of the actual process being modeled. Figure 1 depicts a flow diagram representing TSAR's

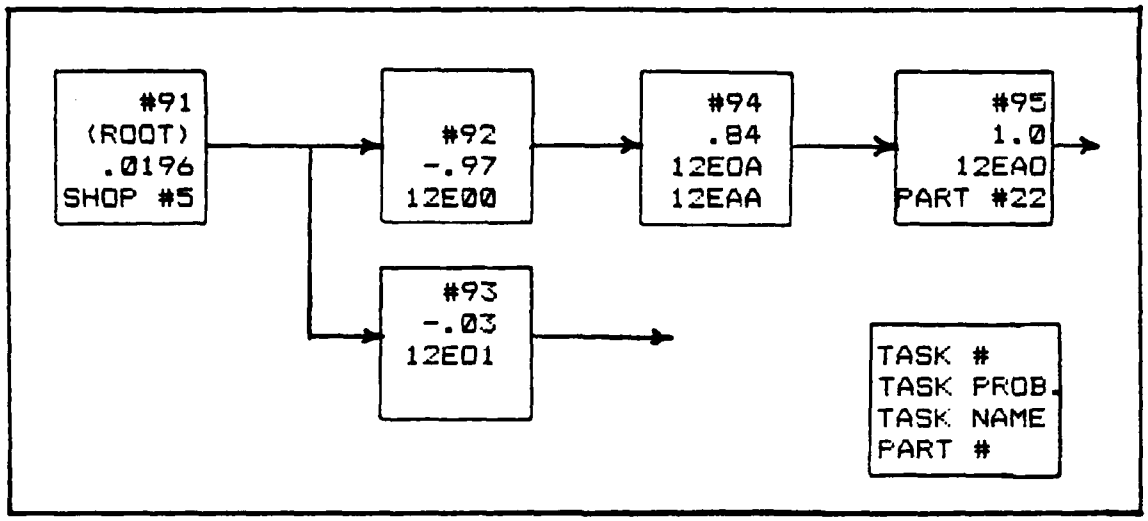

Figure 1. TSAR Ejection Seat Repair (20: Sec III, 49)

modeling of ejection seat repair on the F-16. The computer code corresponding to figure 1 ia an example of a network.

Target Daily Sortie Rate. The target daily sortie rate is operationally defined as: a desired level of aircraft utilization expressed as the number of missions per day each aircraft assigned to a unit is to perform. This value is used to determine the total sortie demand per day, e.g.,

(# of aircraft assigned) X (target daily sortie rate) =
total sortie demand

II. Methodology

Justification of Experimental Approach

The experimental approach was chosen for this study because ". . . no other method can approach [the] power of experimentation to determine causal relationships between variables" (11:129). Further the nature of this study makes an experimental design easy to implement. Since the systems under study are models, manipulation of the variables is not a problem. Finally, experimentation allows control of more than one variable (11:129). This is an important consideration because one of the major objectives of the study is to determine if a difference in target daily sortie rate has an effect on the correlation between LCOM and TSAR (15).

Explanation of Experimental Design

The experimental design used in this study is a randomized block design. The randomized block design allows for the testing of two independent variables at the same time (model type and target daily sortie rate) (1:123). Not only can both independent variables be tested, but also the individual effects of each variable can be separated and controlled (18:361). Emory gives steps to setting up a randomized block design. First, the independent variable of primary interest (model type) is broken into levels, usually those of interest to the experimenter. In this case, the levels are LCOM and TSAR. Then, the secondary independent variable (target daily sorte rate) is also broken into

OUTPUT	TARGET DAILY SORTIE RATE		
	1.0	2.0	3.0
MANPOWER (LCOM/TSAR)			
SORTIE PRODUCTION (LCOM/TSAR)			

Figure 2. Experimental Design for Comparing LCOM and TSAR

levels. These levels may be those of interest to the researcher or often they reflect an aspect of the population that is beyond the ability of the experimenter to control directly. For the purposes of this study, target daily sortie rate (TDSR), which is under the control of the researcher, will be held at three levels: 1.0, 2.0, and 3.0. See figure 2. Samples are drawn at random from the range of the possible field of study and those samples are subjected to the independent variables (1:122-124). Conclusions about the effect of the variables are drawn by comparing the averaged impact of all the levels of one independent variable, while holding the other independent variable constant (1:124). If the results of the experiment are numerical, statistical means can be used to make the comparisons between and within variables (18:646-654).

Specification of Variables

Input Variables. The primary independent variable in the study will be the model used to analyze the data base. The model used can consist of two levels or treatments:

Treatment 1 - LCOM

Treatment 2 - TSAR

The secondary independent varible will be target daily sortie rate. Addition of this secondary independent variable will allow analysis of whether variance of the input values changes the degree to which TSAR outputs equate to LCOM outputs (1:123). Target daily sortie rate will consist of three levels or blocks:

Block 1 - target daily sortie rate of 1.0

Block 2 - target daily sortie rate of 2.0

Block 3 - target daily sortie rate of 3.0

Output Variables. Two output variables will be compared, man-hour usage and sortie production. Man-hour usage outputs are broken down either by AFSC or by the shop to which the personnel are assigned, and will reflect the number of man-hours utililized in the networks. Sortie production will be expressed as the total number of sorties that are actually flown (figure 2).

Experimental Controls

The population for this experiment is the total number of outputs that are common to LCOM and TSAR. For purposes

of making the study of manageable size, only two of the outputs will be chosen as the sample. Since each output exists in each model, albeit in different forms, group equivalency is not a concern. However, random error will be induced because of the stochastic nature of the models. Stochastic models are defined as those that have random variables as inputs (1:10). This randomness means that the models may give slightly different outputs even though the user-defined inputs are the same. As suggested by Banks and Carson, the effect of random error on the accuracy of the values for comparison will be controlled by using the mean (average) of the difference between comparable output variables of both models. The means will be computed from multiple runs with the same input data (1:451). In other words, multiple runs of each model will be made at each TDSR, a difference found between randomly paired runs (within the same TDSR) and the mean of the differences calculated.

Ideally, the models would be run with the same random number strings to insure synchronization of the model outputs (1:458). However, with TSAR and LCOM being so different, this is impractical. To compensate, it would be desirable to do a larger number of longer runs than would otherwise be necessary to determine the output means. However, the high cost and time involved with doing large numbers of replications of long LCOM and TSAR runs will set a practical limit on how many are actually done. A limit of 5-10 day runs of each model at each TDSR were done, for

purposes of economy. Finally, simulation models such as LCOM and TSAR are normally allowed to "warm-up" prior to outputs being tabulated in order to avoid bias in the outputs (1:70). However, for use of models to simulate wartime conditions, the transients involved in the early portion of the simulation are of interest, as they are indicative of how the early days of a conflict may differ from the "steady-state" encountered after a period of conflict has elapsed (15). Therefore, the models were run without warmup.

Criteria for Selection into Groups

The criteria for selection of the specific outputs to be included in this sample is purely judgmental, as opposed to selection at random. Sortie production was chosen because it is indicative of the total maintenance effort represented by the simulation and is the "bottom-line" when considering alternative maintenance concepts (7). Man-hour usage outputs were chosen because manpower forecasting is of prime importance to a major segment of potential users of the models, the AF Manpower community. Excluded outputs were not considered for inclusion in the sample for the sake of making the study of manageable scope. Since judgment selection is a non-probability means of sampling (11:280), generalization of the comparison results to the entire population of the outputs is not appropriate (11:279).

Criteria for Analysis

Hypotheses. The general purpose of the analysis is to test the following hypotheses:

H_o: The outputs of the models are the same

H_a: The outputs of the models are different

General Category of Statistical Test. Since the randomized block design used in this study has only two treatments, a paired difference test can be used to compare model outputs (18:361). The specific statistical test that will be used depends on the probability distribution of the outputs (3). Parametric tests are preferred because they generally have greater power to identify differences (3). However, as McClave indicates, one of the underlying assumptions in the use of parametric statistics is that the probability distribution of the tested variables is approximately normal. If this assumption cannot be made, nonparametric comparison tests must be used (18:674).

Determination of Sample Distribution. A Lilliefor's goodness-of-fit test can be used to check the assumption that the outputs are normally distributed (3). The Lilliefor's result will test the following hypotheses:

H_o: The distribution of the outputs is normal

H_a: The distribution is not normal

If the alternate hypothesis (H_a) is indicated, a nonparametric test can be used. If the test fails to reject the null hypothesis (H_o), a parametric test shpuld be used.

Selection of a Specific Statistical Test. If the

decision is made to use a parametric comparison test, paired difference confidence intervals can be used (18:361-366). If a nonparametric test is indicated, the Wilcoxon signed rank test can be used (18:682-685).

Statistical Test Procedure. Regardless of the specific test selected, the general procedure for the tests is the same. Each model will be run a number of times with the same input data. The output data from one model will be paired with corresponding output data from the other, and comparisons made using the appropriate test. The exact wording of the hypotheses will vary depending on the type of test performed.

Paired Difference Confidence Intervals. For the paired difference confidence interval, a point estimate of the mean population difference is derived by averaging the paired differences of the multiple of the model with the same TDSR (2:453). By examining the confidence intervals calculated from the paired differences, the hypotheses be tested, with some stipulated level of confidence ($1-\alpha$). In this case, the hypotheses will be stated as:

H_0: there is no discernable difference between means

H_a: there is sufficient difference between means to indicate a likely true difference between populations

Wilcoxon Signed Rank Test. For the Wilcoxon signed rank test the output data from the multiple runs can be used without transformation. Again the hypotheses is to

be tested with some stated level of α. The hypotheses will be stated as:

H_0: the distributions of the outputs are the same

H_a: the distributions of the outputs are different

Selection of the Confidence Level. Whichever procedure is used, the desired confidence level for the tests has to be stated in advance. In this study, the overall hypotheses are tested by the individual comparisons of numerous output. In order for the confidence in the overall hypothesis to be as high as desired, the confidence level of each of the individual comparisons must be reduced (3). For this reason, Bonferroni's method is used to calculate a value of α, for the individual comparisons, that will result in an overall confidence in the test of hypothesis that is at the desired level (3). For example, if an overall confidence level of 90% is desired for conclusions drawn about both sortie production and manpower outputs, at all 3 target sortie rates, the confidence level for the individual comparisons (within cells) must be higher than 90%. Bonferroni's Method indicates the appropriate confidence level for the individual tests (3).

Categorization of Results

Results can be in 4 different categories:

1. All of the individual tests support the alternate hypothesis (H_a).

2. Most of the individual tests support the alternate hypothesis (H_a).

3. Most of the individual tests fail to reject the null hypothesis (H_0).

4. All of the individual tests fail to reject the null hypothesis (H_0).

Because of the nature of the study, inconclusive results (categories 2 and 3) are likely.

Decision Rules

If the results of the tests fall into categories 1 or 4, the conclusion of the study is straightforward. If the results all refute the hypothesis that the results of the simulations are the same (category 1), the conclusion would be that the outputs of the two models are different. On the other hand, if no result refutes the hypothesis of equality (category 4), then a conclusion that the two models give the same outputs is warranted. However, if the results fall into categories 2 or 3, no conclusive statements can be made. Nonetheless, any tendency noted is still of value to the purpose of this study: to demonstrate that TSAR either is or isn't a viable alternative to LCOM for aircraft maintenance requirements forecasting. Ultimately, conclusions drawn in category 2 or 3 situations will rely on the subjective evaluation of the researcher.

III. Findings and Analysis

Description of the Actual Experiment

The actual comparison of TSAR to LCOM included several steps. First, the databases (inputs) for the models had to be made as compatible as possible (5; 20). Then the databases were run against their respective models, with target daily sortie rates varied from 1.0 to 2.0 to 3.0. Finally, the results from the simulation runs had to be tabulated and analyzed.

Making the Databases Compatible. The experiment was hampered by the lack of truly compatible databases. TSAR is constructed as a wartime-only model. It is setup to handle a two-shift maintenance operation only (as opposed to the three shifts commonly employed in peacetime maintenance organizations), and there are other features of the model that are most compatible to simulating maintenance in a wartime environment (15). Unfortunately, the only LCOM database available for the experiment was developed for simulating peacetime maintenance practices (5). Because of this inherent difference in the conceptual design of the databases, numerous changes had to be made in order to make them as compatible as possible. In keeping with the premise of testing TSAR while holding LCOM as a standard, the bulk of the changes were made to the TSAR database. Nonetheless, there were some changes made to the LCOM database in order to maximize compatibility.

Changes to the Databases. Early test runs of TSAR clearly showed the need for changes for the sake of compatibility. The TSAR simulation gave results indicating much higher achieved sortie rates and lower man-hour usage than did LCOM runs using the same flying schedule. This was an expected outcome because of the assumptions TSAR makes about the ability of the maintenance organization to expedite work under wartime conditions (8; 9). In order to make TSAR as compatible as possible with LCOM the general changes listed in table I were made to the databases. See appendix A for specific variable value changes. Adjustments to the task times and the pre- and post-sortie delay times were arrived at through analysis of the flow of aircraft through the simulation, excluding unscheduled maintenance. Changes were made until the sortie cycle times (the time from the beginning of a sortie until the aircraft is ready for a subsequent sortie), excluding unscheduled maintenance, were roughly the same between LCOM and TSAR. See figure 3. LCOM reconfiguration cutoff times were reduced to zero to prevent the automatic loss of sorties due to the close scheduling of the aircraft missions in the flying schedule. Some of the changes to the databases (e.g. the exclusion of cannibalization and phase maintenance) were done to reduce potential sources of variability in the experiment, as opposed to being done purely to maximize compatibility.

Other changes to TSAR directly reflect the differences between maintenance philosophies for wartime and peacetime

TABLE I

General Changes Made to Databases

Model	Change (5; 20)
TSAR	Remove resource (manpower, spare part) constraints
LCOM	Remove resource (spare part) constraints
TSAR	Remove task time modifiers (set task times to 100% of LCOM standards)
TSAR	Adjust pre- and post-sortie delay times
TSAR	Remove hot-pit refueling option
TSAR	Modify task structure to do pre- and post-sortie maintenance tasks in series versus parallel
TSAR	Remove cannibalization of spare parts and SRUs
TSAR	Remove option to defer maintenance
TSAR	Delete phase maintenance requirements
LCOM	Delete reconfiguration cutoff times

maintenance. Examples are the hot-pit refueling and parallel maintenance tasks. In wartime, these tasks are often completed in those ways to minimize sortie cycle time and thus maximize sortie rate. In peacetime, the tasks are normally done sequentially (15).

Flying Schedules. TSAR and LCOM use different methods of implementing sortie demands. TSAR uses a special card type (CT) (CT #50) within the main database, for submittal

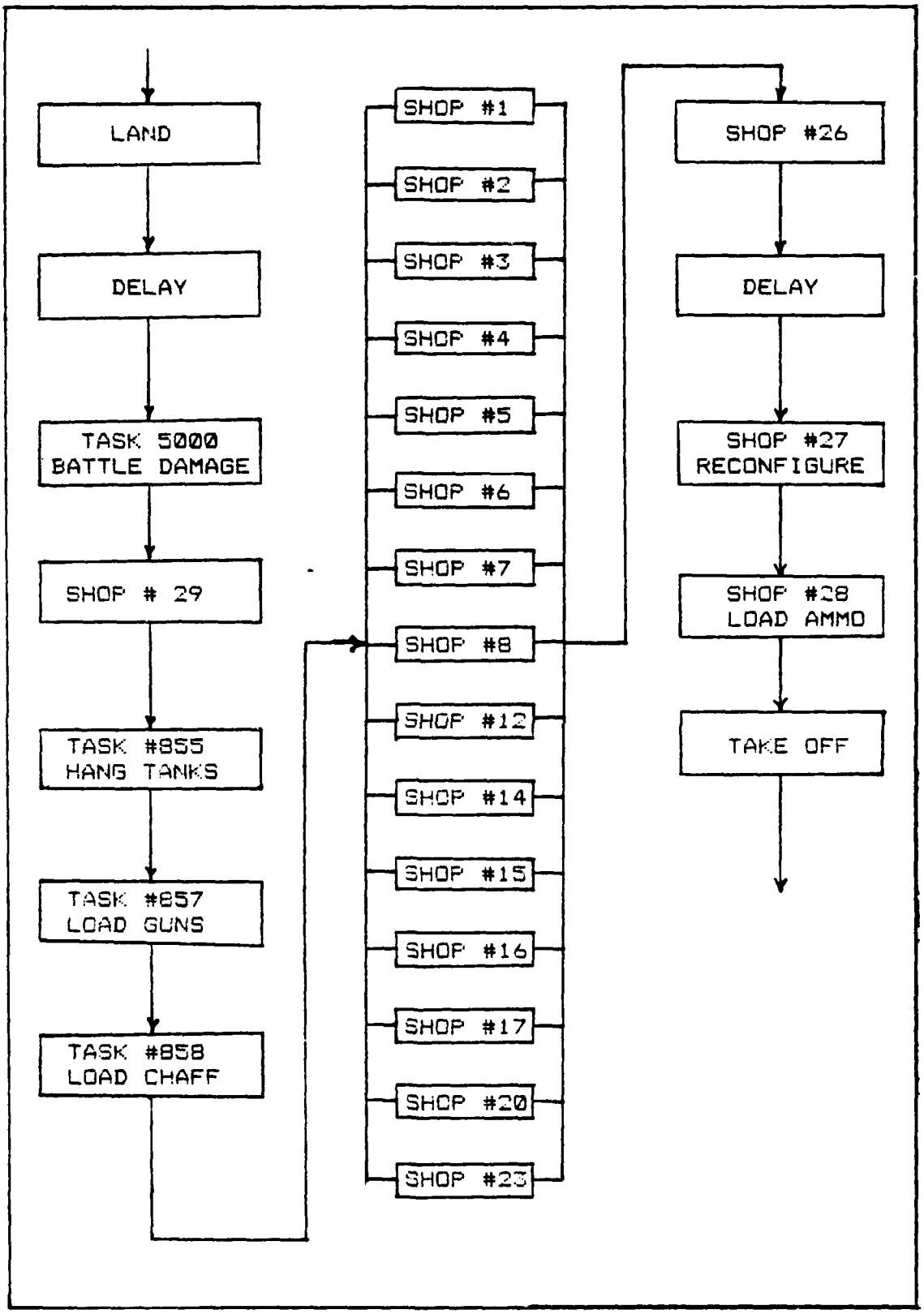

Figure 3. TSAR Representation of Sortie Cycle (8:40)

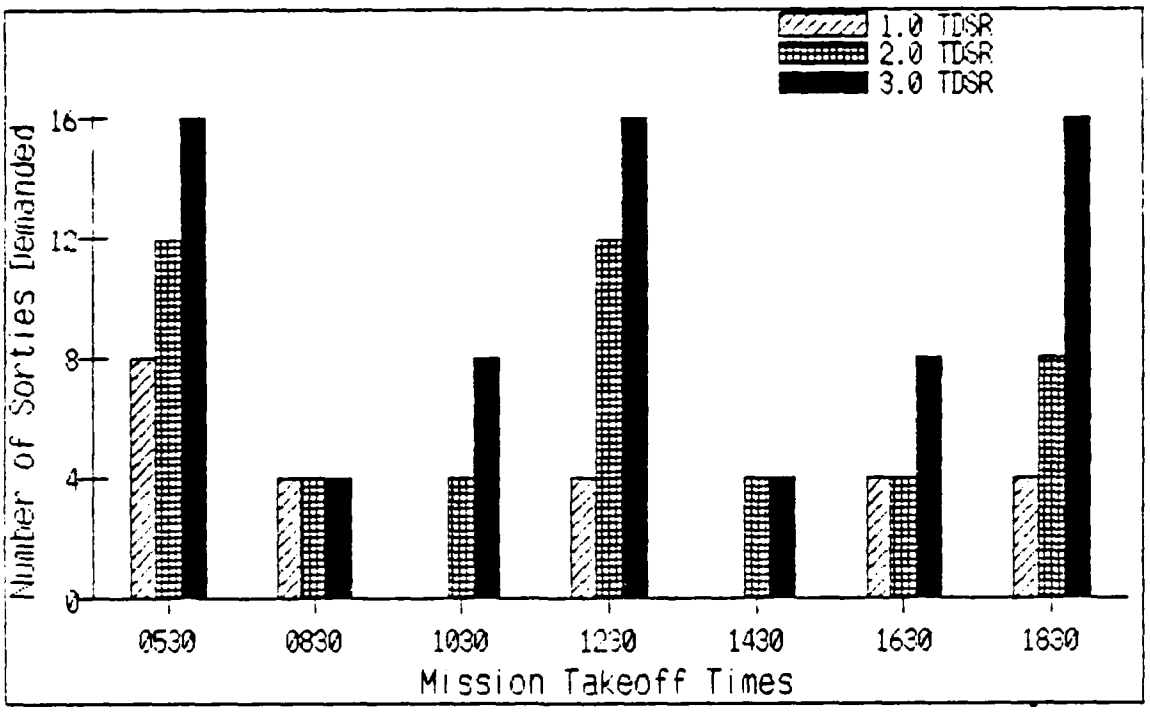

Figure 4. Flying Schedules for 1.0, 2.0 and 3.0 TDSRs

of the desired flying schedule (9:163-167). LCOM also uses a unique form (form #20) for sortie demands, but these forms are accumulated in a separate file from the main database, known as an exogenous file (6: Sec 3, 41-46). Nonetheless, exact duplication of flying schedules was easily attainable. Figure 4 graphically displays the 3 flying schedules, corresponding to the 1.0, 2.0 and 3.0 target daily sortie rates (TDSR), used in this study. See appendix A for the detailed flying schedules.

Running the Models. Ideally, the models would have been run on the same computer system to alleviate any possible variance stemming from the operating characteristics of different systems. However, this was impossible since no system was available to the researcher that had both models

installed. LCOM was run on a NAS 7000 operating system, an IBM compatible mainframe computer, while TSAR runs were done on a VAX 11/785 mini-computer. Five runs of thirty days were made of each model at each TDSR to get the needed data for use in the comparisons. Five runs was chosen as a trade-off between the need for accuracy, which would have dictated more runs, and the need to conserve time and computer resources, which demanded that the number of runs be kept to a minimum.

Selection of a Confidence Level. As described in Chapter 2, Bonferroni's method was used, in advance, to determine the value of α that was needed for individual runs to yield the desired overall level of confidence for the combination of all comparisons. A desired overall confidence level of 90% was selected for the comparison of TSAR and LCOM. Since there were 6 individual comparisons to be made (sorties completed and man-hours used, at each of 3 separate TDSRs) Bonferroni's method yielded a confidence level of 98.33% (α = .0167) necessary for individual comparisons (appendix C). This gave a two-tailed t-value of 3.966 (4 degrees of freedom) for use in the paired difference confidence intervals (appendix C).

Results of Runs

The results of the 30 runs are listed in appendix B. The first task in processing the raw data was to determine if the parametric equation assumption of normalcy was valid.

Application of Lilliefor's Test. As explained in

Chapter 2, a Lilliefor's test was used to test the assumption that the data to be used in the comparisons came from normal distributions (3). The test was applied to all 12 groups of sample data using a desired confidence level of 99% in rejecting the assumption of normalcy. The confidence level was set intentionally high because, as Law and Kelton note, the act of subtraction in constructing a paired difference confidence interval helps to overcome skewness in the distributions of the random variables (16:319). Therefore, it was felt that a good deal of leniency could be shown in the assumption of normalcy, without unduly biasing the results. With these parameters, the Lillifor's test failed to reject the hypothesis that the samples were drawn from a normal distribution, in all 12 groups. This indicated that the use of parametric statistics was justified, and therefore the use of a paired difference confidence interval was appropriate.

Paired Difference Confidence Intervals. Corresponding groups of data were matched and individual samples paired at random. From the resulting 5 differences, a mean and standard deviation were calculated. Using this data, and the t-value derived from the application of Bonferroni's method, 98.33% confidence intervals were constructed for each of the comparisons (appendix C). The confidence intervals are shown in table II.

Table II

Confidence Intervals for Paired Differences (LCOM - TSAR)

TDSR	Output	Confidence Interval
1	Sorties	-.4 ± 1.59
1	Man-Hours	6128.8 ± 909.88
2	Sorties	-72.2 ± 26.17
2	Man-Hours	12379.0 ± 1866.03
3	Sorties	-62.6 ± 37.93
3	Man-Hours	13543.4 ± 1907.92

Statistical Analysis of Results

As outlined in Chapter 2, the hypotheses tested with a paired difference confidence interval are stated as:

H_0: there is no discernable difference between means

H_A: there is sufficient difference between means to indicate a likely true difference between populations

In testing these hypotheses with a confidence interval, the key is whether or not the confidence interval contains zero. If so, the confidence interval indicates no reason to reject H_0. If the confidence interval does not contain zero, H_0 is rejected and H_A accepted (1:454). Applying these rules to the confidence intervals in table II, it was found that in

all cases, save one, the confidence interval indicated sufficient differences in means to indicate a likely true difference between populations. The lone exception was the mean difference in sortie rate for TDSR = 1.

Analysis of Results in Terms of Experimental Hypotheses

The experimental hypotheses for this study were:

H_o: The outputs of the models are the same

H_a: The outputs of the models are different

By applying the categorization of results listed in Chapter II, a category 2 situation is apparent: most of the individual tests support the alternate hypothesis (H_a). As stated in the decision rules of Chapter II, this is not a clear cut endorsement of either hypothesis. Therefore, conclusions drawn rely on the judgement of the researcher. In this case, it is safe to say that the results of the paired difference confidence intervals strongly indicate a significant difference in the outputs of TSAR when compared to LCOM for the databases used in this study. Figure 5 displays a comparison between the two models of sortie production versus the number of sorties tasked in the flying schedules. It gives evidence as to why sortie production at TDSR 1 is correlated between the models. Both models simulate the completion of virtually 100% of the sorties tasked. In other words, the sortie production numbers would have to be the same simply because they cannot exceed the number of sorties tasked in the flying schedule. Further support for the alternate hypothesis (H_a) is given by the large

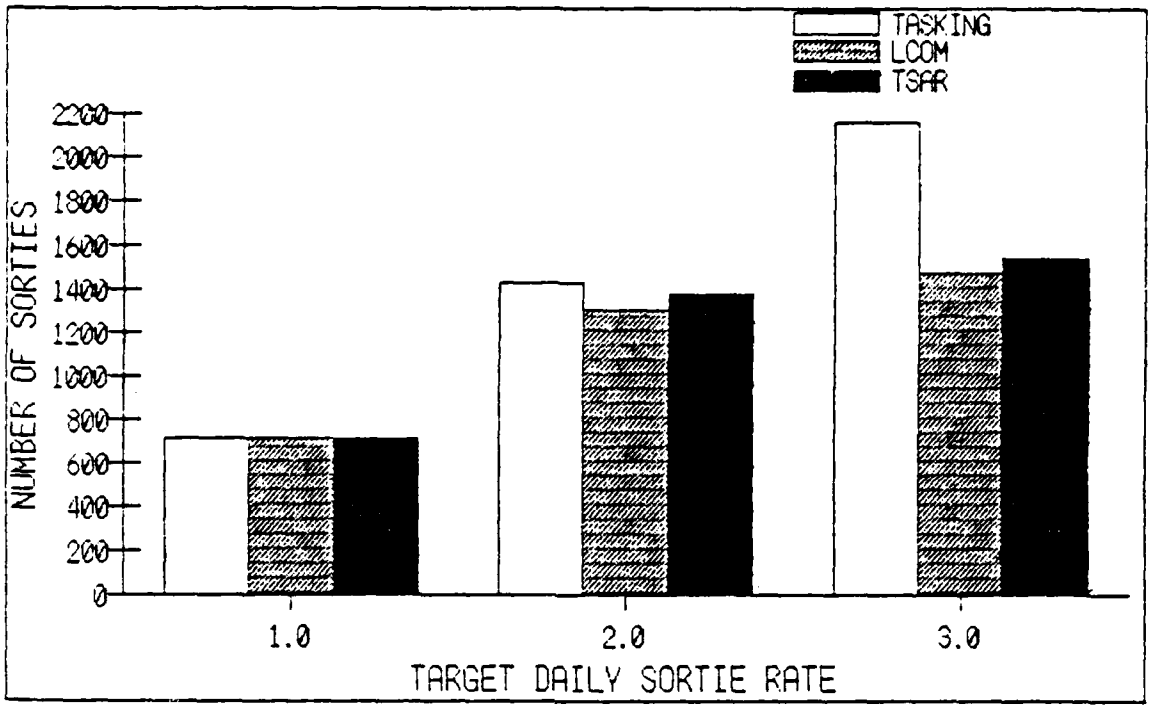

Figure 5. Comparison of Mean Achieved Sorties to Tasked Sortie Levels at Various TDSR

discrepancy in man-hour outputs between the two models. Figure 6 clearly shows that the numbers are unmistakably different, visually, as well as statistically.

Discussion of Results

The large differences between the man-hours used in the two models seems to indicate that there is a major discrepancy between the setup of the databases. Despite the researcher's efforts to find and correct differences in underlying assumptions, it seems likely that such is the source of the discrepancy. Evidence to this effect can be found (figure 7) by examining the number of man-hours used as compared to the number of sorties flown. Note that the lines

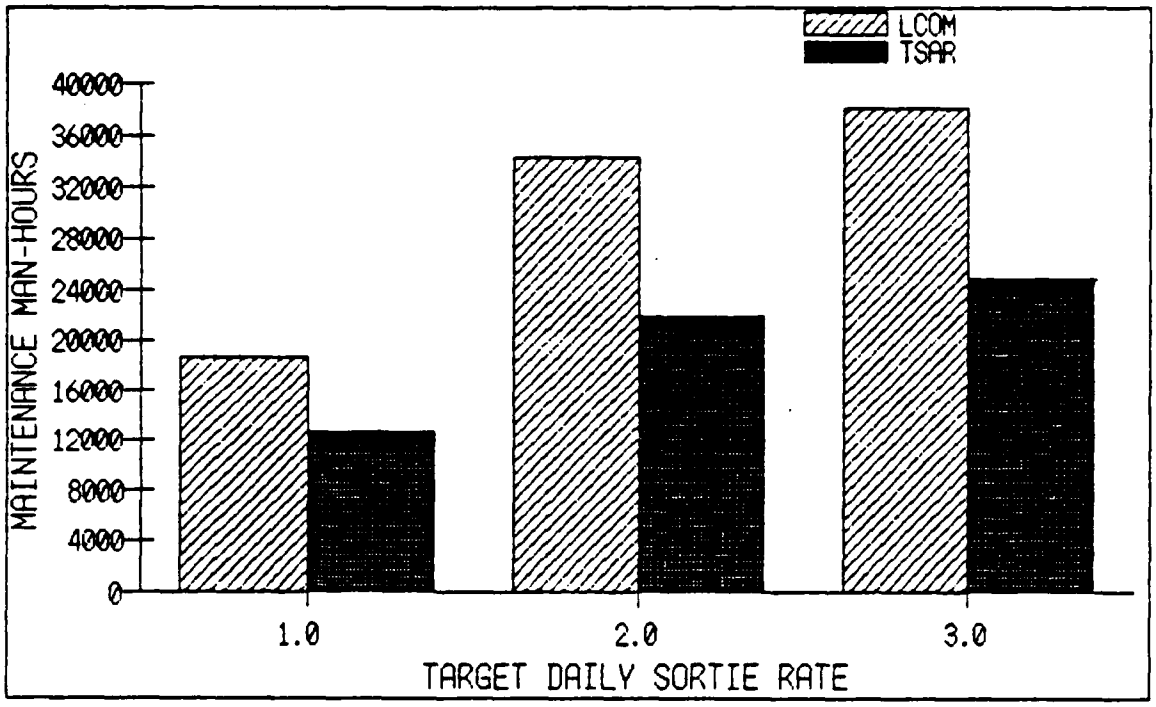

Figure 6. Comparison of Man-Hour Outputs

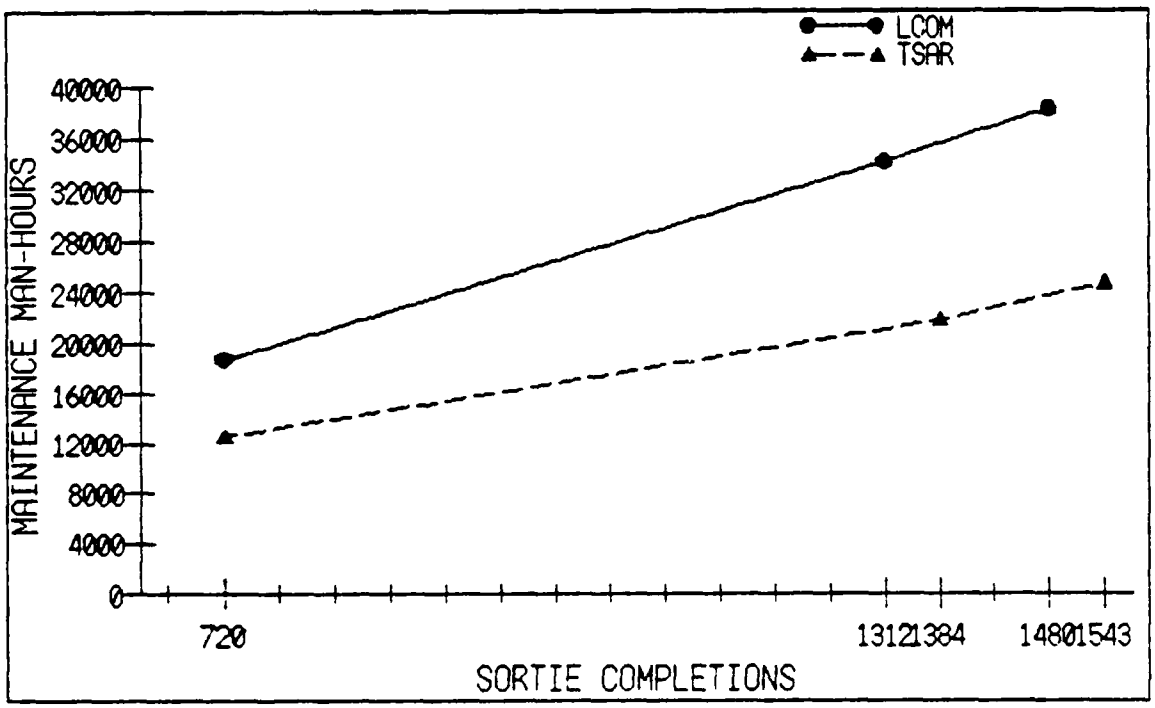

Figure 7. Comparison of Man-Hours to Sorties

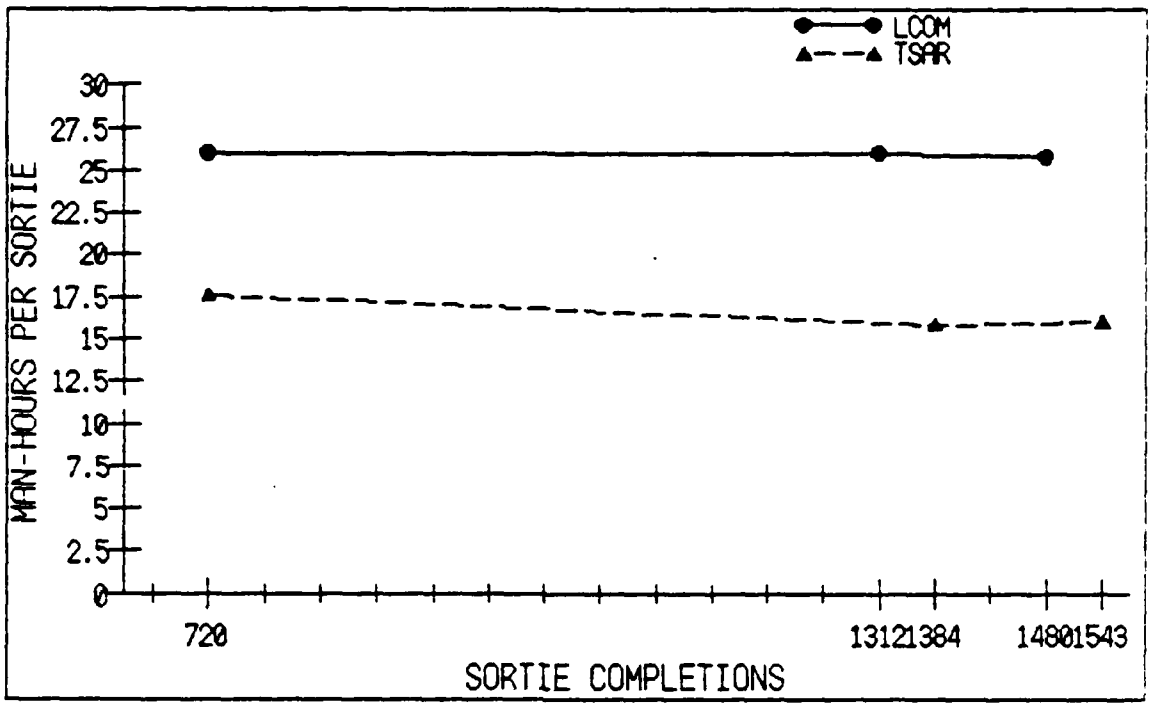

Figure 8. Comparison of Man-Hours per Sortie

described by the outputs of the two models are straight and nearly parallel. This suggests the presence of an unidentified constant difference between the databases. This theory is lent more support by normalizing the man-hours by dividing total man-hours by the number of sorties achieved at that level of man-hour expenditure (figure 8). In this case the lines are almost exactly parallel. LCOM seems to have a nearly constant expenditure of approximately 26.02 man-hours per sortie (mean = 26.02, standard deviation = .132). TSAR shows slightly more variablility, with approximately 16.49 man-hours per sortie (mean = 16.49, standard deviation = .916). A paired difference confidence interval composed from the random differences between the man-hours per sortie indicates a difference of 9.685 ± .47 with 90%

confidence. The very small range of this confidence interval lends credibility to a belief that there may be a constant or nearly constant factor difference between LCOM and TSAR. The factors that account for the approximately 9.5 man-hours per sortie difference in these figures may be the only cause of the apparent difference between LCOM and TSAR.

Findings Relative to Research Objectives

In addition to the statistical findings in support of the experimental hypotheses, the study was undetaken to explore the three research questions listed in Chapter 1.

Differences Between Networks. The first research question was: What differences exist between LCOM and TSAR simulations? The answer to this question is quite lengthy. Despite the fact that the maintenance networks in the TSAR database were adapted from those in LCOM, gross differences in the models exist. While by no means an exhaustive list, the following are some of the differences that may be of consequence to potential TSAR users.

Task Definitions. The F-16 TSAR database used in this study (19), appears to combine maintenance tasks depicted as separate tasks in the LCOM simulation of the same series of tasks. As a result, task times, and task probabilities for unscheduled maintenance tasks, must be combined. This makes it exceedingly difficult for the novice TSAR user to make side-by-side comparisons of LCOM and TSAR maintenance networks to insure compatibility. Spot checks of TSAR networks by the researcher seemed to indicate that

the net effect of the two methods is the same; both accomplish the same tasks approximately the same percentage of the time, with approximately the same expenditures of resources and time. Further, no readily apparent reason could be found for TSAR's compression of tasks. Ultimately, the users who want to dig into the networks and see for themselves that a network is an accurate depiction of a real-life occurrence, will feel more at ease with LCOM databases, or TSAR networks that are configured like LCOM databases. The networks are simply more detailed and have a better one-for-one correspondence with actual maintenance activity in LCOM. For users that don't want or need to know the exact details of the how the simulation matches with actual maintenance practices, this observation is of no concern. In fact, for the more casual user, TSAR has the advantage in having much fewer total tasks with which to have to deal. It seems safe to speculate that the lower level of detail in TSAR helps contribute to its faster execution speed and its ability to model a much broder range of airbase and theater activities. This may be the reason for the task combinations noted. It is possible that TSAR networks could be constructed so as to more nearly match the LCOM format, especially for relatively simple databases.

Data Entry. As a result of the much broader set of options available to the TSAR user, the TSAR database requires a much larger number of different input variables. Whereas LCOM uses 13 different forms for data entry, plus a

number of change card options that generally control the operation of a single switch or variable (6: Sec 4, 2), TSAR has 107 different card types (9:228-236), although it is unlikely that all would be used in a single database. In the F-16 databases used in this study there were 9 LCOM forms used (5) and 62 TSAR card types used (20). The differences are not as great as these number would lead to believe, however. In both cases, the databases contained a number of options that were not used in this particular study, but TSAR has by far a larger number of cards, which are dedicated to entering data necessary to simulate the entire airbase and theater environment, but weren't necessary to this particular study. In addition, LCOM utilizes a change card file (6: Sec 4, 2-27) that initiates a number of the options available to TSAR as a separate card type. Nine change cards were used in the LCOM runs done for this study, roughly equivalent to the options available on 1 TSAR card type. Despite these ameliorating factors, TSAR databases are much more complex in their structure. For a user that doesn't need the great flexibility advantage that TSAR offers, a LCOM database is easier to "find your way around". The sheer number of options available to the TSAR user can be bewildering and make it difficult to insure that the desired activities occur while those not wanted are suppressed.

LCOM has the disadvantage in initial simulation preparation of having to use at least 3 different files

(initialization, exogenous and change) to accomplish data entry (6: Sec 3, 1-3). All TSAR data entry can be done in the same file, unless attack simulation is required. In some cases the use of exogenous and change files can simplify the use of LCOM, though. This is especially true when different flying schedules or input changes are used against the same basic database. Several different exogenous and/or change files can be produced and used to alter the simulation, without having to edit the basic database. For instance, in this study, three different flying schedules were used. With LCOM, the flying schedules were prepared and submitted to three separate exogenous files. Changes to the maintenance networks had no effect on these files. With TSAR on a mini-computer, using three different flying schedules required the use of three separate databases, or the editing of the database each time a different flying schedule was needed. If three databases were used, changes to the maintenance networks had to be made to all three databases in order to keep them current. On a more capable operating system, this disadvantage would largely or completely disappear (15).

Making Runs. The ease of making runs varies between the two models. LCOM has the advantage of having exogenous and change files, discussed in the preceding section. However, when doing multiple runs with the same database, TSAR has clear advantages. With a quick change to card type #1, the user can specify any number of repetitions to be

done (9:18). TSAR automatically changes random number streams at the beginning of each run, if desired, to produce a distribution of outputs. LCOM, on the other hand, requires the user to submit runs singly. If changes in random number streams are necessary, initialization seeds must be specified, in the change card file, for each stream to be changed (6: Sec 4, 16). Another advantage for TSAR is its faster execution time. Since the two models were run on different systems, with different loading factors, direct comparison should not be interpreted as an accurate reflection of exact differences in model execution times. However, the average time for the 15 TSAR runs done for this study was 1.1979 minutes, while the average for the 15 LCOM runs was 12.642 minutes, more than a factor of 10 (appendix A). It should be remembered that TSAR runs were done on the less capable of the two systems, therefore the actual, inherent difference in execution speed between LCOM and TSAR is likely even larger than that indicated. Since LCOM and TSAR are both normally done as batch runs, that is the runs are submitted and the computer system holds them until system loading is favorable, the actual difference in turnaround time between LCOM and TSAR can stretch into hours, in the researcher's experience.

Outputs. LCOM and TSAR take very different approaches to presentation of outputs and there are many differences between the results achieved. Both have a great number of options regarding how much detail the user cares

to get from the simulation. In addition to the outputs available from the actual model run, LCOM offers a number of post-processor options that can further increase the variety of outputs the user can obtain (6: Sec 5, 3-4). At the time of the study, TSAR did not have a post-processor available, although provisions have been made in the coding of the model to accomodate a post-processor. Since there are so many options at the disposal of the user of either LCOM or TSAR, it is infeasible to address even a fraction of the possible advantages of one over the other. Rather, the researcher feels two features are of special note, both with TSAR. On the positive side, TSAR, by virtue of its capability to do multiple runs, presents multiple trial results for an entire series of runs. For instance, in this study five runs were done with each flying schedule. TSAR presented the average number of sorties flown as a part of the multiple trial results, eliminating the need to search the output for individual data elements in order to make quick checks of run success. On the other hand, although man-hours are clearly tracked, TSAR has a deficiency in its handling of manpower utilization outputs, at least from the standpoint of a manpower analyst. Man-hours used are reported by the shop to which the personnel are assigned. This is less desirable than the LCOM procedure, in which maintenance man-hours are reported by AFSC, since the manpower analyst is forced to convert from shop number to AFSC. Since TSAR provides for only 30 shops (8:37) a maximum of 30 AFSCs can

be tracked separately. That in itself may be a relatively trivial problem, especially in light of Rivet Workforce efforts to reduce the number of maintenance AFSCs (13) but the problem is compounded because there is not a one-for-one correspondence between shop type and personnel type, in all cases. For instance, in the F-16 TSAR database used for this study, shop #30 has both 461X0 and 423X3 AFSC personnel assigned (19: Sec III, 37). Further confusion stems from the accounting of man-hours. Man-hours are accumulated in the shops to which the personnel are assigned, even though they may be performing a task they are cross-trained for, in another shop (15). These factors make TSAR difficult to use for manpower assessments. Therefore, to be of the most benefit to the manpower community, the accumulation of man-hour data within TSAR would have to be modified.

Changes Necessary to Make TSAR Compatible to LCOM. The second research question was: In what ways must TSAR be manipulated to give acceptable forecasts? This question cannot be fully addressed because the study failed to fully achieve standardization between the databases. Nonetheless, the final database used in the study gave outputs that were much closer to LCOM outputs than did the original, unchanged database documented by Orlando Technology, Inc (19). General changes made are listed in table I, while specific changes are listed in appendix A. As a caution to new TSAR users, the collateral effects of a number of different variable inputs, scattered over a number of different card

types, go into the operation of sometimes seemingly straight-forward tasks. An example is the loading of munitions onto the aircraft. TSAR differentiates between basic munitions and mission-specific munitions and each is handled differently. Basic munitions are specified on card type (CT) #15/1). Basic munition loading is specified as a task or tasks in the on-equipment maintenance networks (CT #5s). The probability that a particular sortie will require loading of basic munitions (after the initial configuration of the aircraft) is set by the probability of basic munitions retention on a different card type (CT #16/1), as opposed to the usual method of controlling on-equipment maintenance by specifying network entry probabilities (CT #7). Task times and resource requirements for basic munitions loading are contained in the CT #5. Mission specific munitions are specified through a different process. The mission type required is specified in the flying schedule (CT #50). From that requirement, the type of standard combat load (SCL) required is found (CT #12). With the SCL known, the probability that the SCL has been retained is found on CT #16/1, separate from the probability of retention of basic munitions. If necessary, the specific munitions to be loaded, the resources needed and the task times are found (CT #13). In addition to the card types that directly relate to munitions loading, TSAR has a number of user controllable options that can modify the processing of the tasks. For instance, the database may have a task time modifier specified

(CT #17/2), which can reduce or extend the times shown with the individual task (8). As this example illustrates, tracking down the source of a discrepancy within TSAR is no trivial task. Thorough review of the database is essential.

Shortcomings in TSAR. The third research question was: If TSAR fails to provide acceptable forecasts, are there apparent shortcomings in TSAR that can be economically overcome? Although TSAR failed to give forecasts compatible with those from LCOM, the exact reason for this failure could not be determined. It is very likely, in light of the close tracking of the normalized man-hours between LCOM and TSAR (figure 8), that the only real failure was the failure of the researcher to uncover the factor or factors that remain in disagreement between the peacetime LCOM database and the wartime TSAR database. However, in the area of outputs there are useful changes that could be made. For instance, the accumulation of maintenance man-hours by AFSC, or the development of a post-processor that would do so, would greatly aid the prospective manpower analyst-TSAR user. Conceptually this not a difficult problem. In addition, projects are currently underway to produce a TSAR pre-processor (4). The pre-processor would take a more easily understood, user-produced database and convert it into the proper coding for TSAR simulations (4). This would reduce or eliminate the problem of TSAR's complexity for initial data entry (15), a sorely needed improvement.

IV. Conclusions and Recommendations

Significance of Findings

The findings of this study can be broken into two groups, statistical and qualitative. The significance of the findings varies from one to the other.

Significance of Statistical Findings. The validity of the statistical findings of this study was greatly reduced, by the lack of databases with the same basic assumptions. The LCOM database used was based on peacetime maintenance concepts and practices, while TSAR databases are, by definition, designed with wartime maintenance in mind. Given these problems, along with the great complexity of the models, it is not surprising that the outputs of the models are significantly different. These figures really tell little about the relative merit of TSAR in relation to LCOM. If any conclusion can be drawn, it is that TSAR's capability is hinted at by the nearness to which its man-hour outputs parallel those of LCOM (figures 7 and 8).

Significance of Qualitative Findings. The experiences of the researcher may be of great value to future users of TSAR, or to those who contemplate using TSAR in place of, or as a compliment to, LCOM. TSAR is a relatively new model and few people have experience in running both TSAR and LCOM, especially on the same problem. Thus the relative merits and advantages of one model over the other are not well-known, aside from the unique capabilities of TSAR to

simulate extended airbase and theater activities.

Practical Implications of Findings

The adaptability of TSAR to peacetime maintenance concepts and practices has not been shown by this study. Therefore, further study is warranted before concrete conclusions can be drawn about the use of TSAR to replace LCOM. Because of this lack of proof, and because LCOM is easier to use in many ways than TSAR, it seems prudent to use LCOM if projected uses are within the bounds of LCOM's capabilities. However, there is a growing need to assess requirements using a systems approach. This implies considering the interaction of various components of a larger system rather than looking at the components in isolation. LCOM is recognized as doing a good job at forecasting aircraft maintenance requirements at a single base. However, there are pressures on the requirements community to expand their research to include the interactions of aircraft maintenance with other airbase activities, enemy attack and theatre operations. These needs threaten to overload the single airbase, maintenance-only capabilities of LCOM. When, for these reasons, an analyst is driven to seek more powerful tools than LCOM, TSAR has natural attractions. It is at that point that the qualitative findings of this study can be useful in the assessment of TSARs applicability and use. It should be remembered that TSAR is very new and has lots of room for future development. Those who have worked with LCOM for a number of years can attest to the fact that

earlier versions of LCOM had shortcomings much like those identified in TSAR: weak output and complex inputs (4). These problems can only be overcome through work with the model to identify areas for improvement and continual development to fix the shortfalls.

Recommendations for Follow-on Experiments

This study can be thought of as an ice-breaker. The experiences of the researcher bring up more questions than they answer and point the way towards some promising avenues of further research. But a few basic qualifiers need to be addressed. Part of the difficulty in getting good answers in this study was the complexity of the models. It takes a lot of time and effort to become familiar with one, let alone two, simulation programs of this magnitude. Future researchers into the differences between these two models would be well served to: allocate about a year's time to the study, or, work in tandem with another researcher (with each taking prime responsibility for learning one of the two models), or have a good working knowledge of one of the models prior to undertaking the study. A researcher considering doing a study of this type should be comfortable with computers, enjoy the challenge of a jigsaw puzzle-type of problem and be able to work well alone or with one or two other researchers.

Some avenues that appear to be promising for future research include the following:

1. Replicate this study, picking up where the

researcher left off, and continue the search for factors that differ between LCOM and TSAR. Comparisons of outputs other than sortie production and man-hours are possible and will have to be done eventually.

2. Narrow the scope of the study and look at some subset of the models. It is feasible to isolate certain of the networks, for example, and run the models with just those networks active. Another possibility is to adjust task probabilities so that only scheduled maintenance and sortie configuration is done.

3. Find a wartime LCOM database and run it in comparison to an unaltered TSAR database. Attempt to identify how the databases parallel one another and how they mutually differ from peacetime databases.

4. Build simple TSAR and LCOM databases from scratch and run in comparison. This would definitely be a job for two people, but it's one way of assuring compatibility of assumptions.

Appendix A. Model Inputs

TABLE III

Changes Made to TSAR Database, Primary Control Cards

Card Type	Variable	Original Value (19)	New Value
1	NTRIAL	25	
2/1	PRINT	4	0
	STATFQ	10	0
	CUMSTA	1	0
2/2	Sortie Demand	-1	0
3/1	POSTPN	1	0
	DOPHAS	1	0
	CANMOD	2	0
	CANSRU	1	0
3/2	NOFUEL	0	1
	NEWDATA	0000	1600
3/3	RANDM	1	0
	FULL	0	1
	HIATUS	14	0
	NPART	271	387

TABLE IV

Changes Made to TSAR Database, Resource Requirements Data

Card Type	Field Name	Old Value (19)	New Value
5 #857	TTU	2	4
5 #858	TTU	1	2
13 #1	MEAN TTU #1	7	10
15/1	DELAY/POST-FLT	16	90
	DELAY/PRE-FLT	29	49
17/1	AC LOADS	1	2
	REFILL TIME	125	45
17/2	HURRY/ON EQPT	70	100
	HURRY/PRE-FLT	70	100
	HURRY/OFF EQPT	70	100
	HURRY/MUN ASMB	70	100

Table V

Changes to TSAR Database, Initial Stocks of Base Resources

Card Type	Field Name	Old Value (19)	New Value
20	AIRCRAFT/SQ #1	3	1
	AIRCRAFT/NUM	72	24
	AIRCRAFT/CREWS	96	32
21	PERSONNEL (ALL)	REMOVE MAN-HOUR CONSTRAINTS	
29	TASK SEQUENCES	ALL SCHEDULED MNX IN SERIES	

Table VI

Changes to TSAR Database, Comm. Systems and Initialization

Card Type	Field Name	Old Value (19)	New Value
33	CLASS	(CARD ADDED)	3
	MEAN TIME (HRS)		6
	CLASS		2
	MEAN TIME (HRS)		6
41 #1	# ASSIGNED/MSN1	0	24
	# ASSIGNED/MSN2	48	0
	# ASSIGNED/MSN3	24	0

Table VII

Changes to LCOM Database (5)

Form 21: ACAP to CAP Cutoff Time Changed From 1.8 to 0.0

Form 21: CAPCAP to CAP Cutoff Time Changed From 2.7 to 0.0

Change Cards:

VNAM	IPAR	FPAR	IAPAR	IPAR2	FPAR2
CONSUM	3		ACF		
KTIMSW		18	ACF		
GENRAT	3		ACF		
NOCLWM					
RFREQ		31			
STORAC	3		ACF		
AUTH	389	9999			
AUTH	399	999			
STOP		31.1			
(ISEED)	Used As Necessary for Streams #2,3,6,7				

Flying Schedules

Flying schedules for LCOM and TSAR were functionally identical. Each schedule called for the same pattern of mission demands each day for 30 days. The LCOM schedule called for the flights to begin on Day 2 and to continue through Day 31, to avoid losing sorties on Day 1 due to the long FRAG time used, while TSAR's schedules began on Day 1. The FRAG was set at 18 hours prior to takeoff. All sorties flew the same mission profile, and all missions were for 1.1 hours (constant). Four sorties per mission were requested, with a minimum of 2 needed to avoid mission abort. Missions could takeoff up to 15 minutes late. Mission takeoff times are shown in Table VIII.

Table VIII

Flying Schedules-Target Daily Sortie Rate (TDSR) 1.0/2.0/3.0

Mission Time	TDSR 1.0	TDSR 2.0	TDSR 3.0
	# of Msns	# of Msns	# of Msns
0530	2	3	4
0830	1	1	1
1030	0	1	2
1230	1	3	4
1430	0	1	1
1630	1	1	2
1830	1	2	4

Appendix B. Model Outputs

Table IX

Sortie Production and Man-Hour Outputs for LCOM and TSAR

TDSR	Run #	L C O M		T S A R	
		Sorties	Man-Hours	Sorties	Manhours
1.0	1	720	17932	720	12590
	2	719	18877	720	12930
	3	719	18884	720	12290
	4	719	18961	720	12750
	5	720	19110	719	12560
2.0	1	1323	34301	1394	21500
	2	1304	32519	1381	21950
	3	1305	35293	1397	22030
	4	1321	34580	1372	22270
	5	1309	34762	1379	21840
3.0	1	1481	37699	1559	24440
	2	1479	39272	1535	24630
	3	1477	38275	1516	25980
	4	1487	38158	1536	23770
	5	1478	38123	1569	25240

Table X

Simulation Run Execution Times (Seconds)

Model/TDSR	Run #1	Run #2	Run #3	Run #4	Run #5
LCOM/1.0	307.2	459	426.6	598.2	342
LCOM/2.0	581.4	847.2	990.6	1616.4	687.6
LCOM/3.0	720	1050.6	1006.2	1003.8	741
TSAR/1.0	251.16*				
TSAR/2.0	373.99*				
TSAR/3.0	452.98*				

*Total of all 5 runs

Appendix C. Calculations

Paired Difference T-Test

The paired difference t-test was used to compare model outputs by forming a paired difference confidence interval and checking to see if the interval contained zero (18:362). The general form of the equation used for the paired difference confidence interval is:

$$\bar{x}_D \pm t_{\alpha/2}\frac{s_D}{\sqrt{n_D}}$$

where

$\bar{x}_D$ = the mean paired differences
$t_{\alpha/2}$ = value at desired α level with $(n_D - 1)$ degrees of freedom
s_D = standard deviation of paired differences
n_D = number of paired differences

Bonferroni's Method

In order to insure that the level of confidence for the entire experiment was as high as desired, it was necessary to reduce the value of α for the individual comparisons. Bonferroni's method was used to calculate the level of α for the individual comparisons (3). Bonferroni's equation is:

$$\alpha = \frac{\alpha_c}{p}$$

where

α = error associated with confidence level of individual tests
α_c = error associated with desired overall confidence
p = number of individual tests to be performed

Lilliefor's Test for Normality

One of the assumptions that it was necessary to make in the use of the paired difference t-test was that the relative frequency distribution of the population of differences was normal (18:362). A Lilliefor's test was used to test this assumption (3). The equation for the Lilliefor's test statistic is:

$$D = \sup |F_o(x) - S(x)|$$

where

sup - means find the supremum (maximum) over all values of x.

$F_o(x)$ = the value of the hypothezied cumulative distribution function (CDF) at x

$S(x)$ = the value of the obseved sample CDF at x

The value of D derived from this equation was compared to a critical value of D for the sample size, found in the Lilliefor's table (3).

BIBILIOGRAPHY

1. Banks, Jerry and John S. Carson, II. Discrete-Event System Simulation. Englewood Cliffs NJ: Prentice-Hall, Inc, 1984.

2. Battilega, John A. and Judith K. Grange. The Military Applications of Modeling. Wright-Patterson AFB OH: Air Force Institute of Technology Press, 1984.

3. Clemons, Capt Glen P. Asst. Professor. Class lectures and materials distributed in MATH 535, Applied Statistics for Managers II. School of Engineering, Air Force Institute of Technology (AU), Wright-Patterson AFB OH, Fall Quarter 1985.

4. Cronk, Richard. LCOM Group Leader. Personal interviews. Systems Engineering Directorate, Aeronautical Systems Division, Wright-Patterson AFB OH, 3 December 1985-28 August 1986.

5. Department of the Air Force, Aeronautical Systems Division, Systems Engineering Directorate. Untitled peacetime F-16 database for LCOM. Wright-Patterson AFB OH, undated.

6. Department of the Air Force. Logistics Composite Modeling (LCOM) System. AFM 171-605 Vol. II (Draft). Washington: HQ USAF, 15 May 1984.

7. Ebeling, Lt Col Charles E. Asst. Professor. Personal interview. School of Engineering, Air Force Institute of Technology (AU), Wright-Patterson AFB OH, 13 December 1985.

8. Emerson, Donald E. and Louis H. Wegner. TSAR User's Manual--A Program for Assessing the Effects of Conventional and Chemical Attacks on Sortie Generation: Vol. I, Program Features, Logic and Interactions. Contract F49620-82-C-0018. N-2241-AF. Rand Corporation, Santa Monica CA, August 1985.

9. -----. TSAR User's Manual--A Program for Assessing the Effects of Conventional and Chemical Attacks on Sortie Generation: Vol. II, Data Input Program Operations and Redimensioning, and Sample Problem. Contract F49620-82-C-0018. N-2242-AF. Rand Corporation, Santa Monica CA, August 1985.

10. Emerson, Donald E. An Introduction to the TSAR Simulation Program. Contract F49620-82-C-0018. R-2584-AF. Rand Corporation, Santa Monica CA, Feburary 1982.

11. Emory, C. William. Business Research Methods (Third Edition). Homewood, IL: Richard D. Irwin, Inc, 1985.

12. Fisher, Capt R. R. and others. The Logistics Composite Model: An Overall View. Contract F44620-67-C-0045. RM-5544-PR. Rand Corporation, Santa Monica CA, May 1968.

13. Ginovsky, John. "Changes in Maintenance Field to Affect 2000," Air Force Times, 47-3:3 (September 1, 1986).

14. Gross, Lt Col Richard R. Asst. Professor. Class lectures and materials distributed in MATH 465, Computer Programming for Managers. School of Engineering, Air Force Institute of Technology (AU), Wright-Patterson AFB OH, Fall Quarter, 1985.

15. Halliday, Lt Col John. Chairman, Department of Logistics Management. Personal Interviews. School of Systems and Logistics, Air Force Institute of Technology (AU), Wright-Patterson AFB OH, 27 November 1985-29 August 1986.

16. Law, Averill M. and W. David Kelton. Simulation Modeling and Analysis. New York: McGraw-Hill Book Company, 1982.

17. Marks, Kenneth E. and others. An Appraisal of Models Used in Life Cycle Cost Estimation for USAF Aircraft Systems. R-2287-AF. Rand Corporation, Santa Monica CA, October 1985.

18 McClave, James T. and P. George Benson. Statistics for Business and Economics (Second Edition). San Francisco: Dellen Publishing Company, 1982.

19. Orlando Technology, Inc. TSAR Database Dictionary F-16. Air Force Center for Studies and Analyzes, Washington, 28 March 1986.

20. Roach, Chris and others. F-16 CMC Combat Baseline Data Set. Maint Networks Changed to Match Latest LCOM Data by M B Borst May 83, August 83, October 83, April 84 of General Dynamics. Updated/Documented: November 1985, Orlando Technology, Inc. Rand Corporation: Santa Monica CA.

21. Wheelan, Barbra and Donald Casey. AFLC/XRSA. Personal Interview. HQ AFLC, Wright-Patterson AFB OH, 24 January 1986.

VITA

Captain David R. Noble was born on 23 July 1953 in Kokomo, Indiana. He graduated from high school at Ellsworth AFB, South Dakota, in 1971 and attended the United States Air Force Academy from which he received the degree of Bachelor of Science in General (Military) Studies in June 1975. Upon graduation, he received a commission in the USAF. His first assignment was to the 44th Strategic Missile Wing, Ellsworth AFB, South Dakota, where he served as a Deputy Missile Combat Crew Commander, Missile Combat Crew Commander, Missile Combat Crew Commander-Instructor, Senior Missile Combat Crew Commander-Instructor and Missile Staff Officer. In 1982, Captain Noble was assigned to the Officer's Training School, Lackland AFB, Texas. While there, he served as a Flight Commander and Branch Chief, until entering the School of Systems and Logistics, Air Force Institute of Technology, in May 1985.

Permanent address: 1681 N. Neel
Rapid City, South Dakota 57701

UNCLASSIFIED

SECURITY CLASSIFICATION OF THIS PAGE

AD-A174 330

REPORT DOCUMENTATION PAGE

1a. REPORT SECURITY CLASSIFICATION UNCLASSIFIED	1b. RESTRICTIVE MARKINGS
2a. SECURITY CLASSIFICATION AUTHORITY	3. DISTRIBUTION/AVAILABILITY OF REPORT Approved for public release; distribution unlimited.
2b. DECLASSIFICATION/DOWNGRADING SCHEDULE	
4. PERFORMING ORGANIZATION REPORT NUMBER(S) AFIT/GLM/LSM/86S-54	5. MONITORING ORGANIZATION REPORT NUMBER(S)
6a. NAME OF PERFORMING ORGANIZATION School of Systems and Logistics 6b. OFFICE SYMBOL (If applicable) AFIT/LSM	7a. NAME OF MONITORING ORGANIZATION
6c. ADDRESS (City, State and ZIP Code) Air Force Institute of Technology Wright-Patterson AFB, Ohio 45433-6583	7b. ADDRESS (City, State and ZIP Code)
8a. NAME OF FUNDING/SPONSORING ORGANIZATION 8b. OFFICE SYMBOL (If applicable)	9. PROCUREMENT INSTRUMENT IDENTIFICATION NUMBER
8c. ADDRESS (City, State and ZIP Code)	10. SOURCE OF FUNDING NOS. PROGRAM ELEMENT NO. / PROJECT NO. / TASK NO. / WORK UNIT NO.
11. TITLE (Include Security Classification) COMPARISON OF THE TSAR MODEL TO THE LCOM MODEL	
12. PERSONAL AUTHOR(S) David R. Noble, Captain, USAF	
13a. TYPE OF REPORT MS Thesis 13b. TIME COVERED FROM _____ TO _____	14. DATE OF REPORT (Yr., Mo., Day) 1986 September 15. PAGE COUNT 66
16. SUPPLEMENTARY NOTATION	

17. COSATI CODES			18. SUBJECT TERMS (Continue on reverse if necessary and identify by block number)
FIELD	GROUP	SUB. GR.	
15	05		Comparison Military Resource Requirements
09	02		Computerized Simulation Input Output Models

19. ABSTRACT (Continue on reverse if necessary and identify by block number)

Thesis Advisor: John M. Halliday, Lt Col, USAF
Chairman, Department of Logistics Management

Approved for public release: IAW AFR 190-1.
29 Sept 86
Dean for Research and Professional Development
Air Force Institute of Technology (ATC)
Wright-Patterson AFB OH 45433

20. DISTRIBUTION/AVAILABILITY OF ABSTRACT UNCLASSIFIED/UNLIMITED ☒ SAME AS RPT. ☐ DTIC USERS ☐	21. ABSTRACT SECURITY CLASSIFICATION UNCLASSIFIED
22a. NAME OF RESPONSIBLE INDIVIDUAL John M. Halliday, Lt Col, USAF	22b. TELEPHONE NUMBER (Include Area Code) 513-255-5023 22c. OFFICE SYMBOL AFIT/LSM

DD FORM 1473, 83 APR EDITION OF 1 JAN 73 IS OBSOLETE.

UNCLASSIFIED

SECURITY CLASSIFICATION OF THIS PAGE

A comparison was made between the outputs of TSAR and LCOM. Each model was run with a F-16 database representing peacetime maintenance procedures at a single base. Since TSAR is a wartime model, modifications to the TSAR database were made in an attempt to make the models compatible. Simulation runs were made using three flying schedules, representing 1.0, 2.0 and 3.0 sortie rate taskings. Sortie production and man-hour outputs from like TSAR and LCOM runs were compared. Statistical comparison of the outputs showed TSAR sortie production figures and man-hour outputs varied significantly from those given by LCOM. Results were biased by the lack of completely compatible databases, but there was some evidence to suggest that a fairly constant factor represented the difference in outputs. In the course of the study, qualitative differences in the models were noted. These differences impacted the comparative ease of use of the models and their suitability to specific applications. TSAR is generally more difficult to use, in both input and output preparation and usage, but has greater power across a wide range of options. Development of TSAR pre- and post-processors is suggested as a way to improve ease of input and utility of output.

END

12-86

DTIC