DTIC FILE COPY

TECHNICAL REPORT
TR 90-6

AD-A228 210

DEFENSE COMMUNICATIONS AGENCY

NEACP
Onboard Connectivity Study

30 March 1990

DTIC
ELECTE
OCT 2 4 1990
S D
Cx D

CENTER FOR COMMAND AND CONTROL AND COMMUNICATIONS SYSTEMS

EXCELLENCE IN
C3 SYSTEMS FOR
NATIONAL DEFENSE

c4s

DISTRIBUTION STATEMENT A
Approved for public release
Distribution Unlimited

90 10 18 002

DEFENSE COMMUNICATIONS AGENCY

CENTER FOR COMMAND AND CONTROL, AND COMMUNICATIONS SYSTEMS

TECHNICAL REPORT TR 90-6

NEACP ONBOARD CONNECTIVITY STUDY

30 MARCH 1990

PREPARED BY:

KATHLEEN M. HARRIGAN
Project Officer
Mobile Command Centers
Engineering Division

SUBMITTED BY:

WILLIAM P. McKEE, Jr.
Chief
Mobile Command Centers
Engineering Division

APPROVED BY:

JOHN R. MACY
Colonel, USAF
Assistant Deputy Director
NMCS Information Systems

Copies of this document may be obtained from the Defense Technical Information Center, Cameron Station, Alexandria, VA 22304-6154.

ACKNOWLEDGMENT

This technical report was prepared by the Defense Communications Agency; Center for Command and Control, and Communications Systems (C^4S); Information Systems Engineering Directorate; Mobile Command Centers Engineering Division (SCCA). Technical support was provided by Electrospace Systems, Inc., under contract DCA100-87-C-0067; the MITRE Corporation, under contract F19628-89-C-0001; and the Sacramento Air Logistics Center (SM-ALC) Photonics Technology Center (PTC).

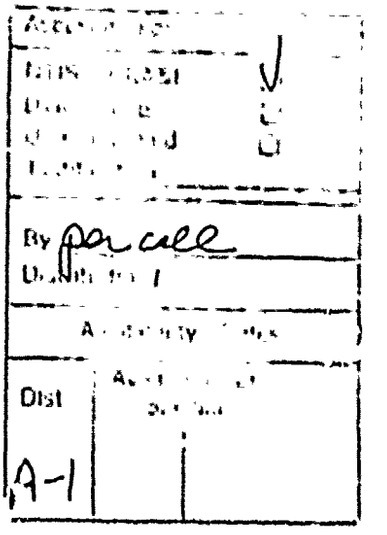

STATEMENT "A" per Kathleen Harrigan
DCA/C4S/SCCC, Virginia Sq. Plaza, 3701
North Fairfax Dr., Arlington, VA 22203
TELECON 10/19/90 VG

CONTENTS

Section		Page
	ACKNOWLEDGMENT	ii
	ABSTRACT	vi
1.	INTRODUCTION	1-1
1.1	Background	1-1
1.2	Purpose	1-3
1.3	Scope	1-3
2.	NEACP ONBOARD CONNECTIVITY	2-1
2.1	The E-4B Aircraft	2-1
2.2	Required Onboard NEACP Connectivity	2-1
2.3	NEACP Switching Systems	2-4
2.4	Local Area Network Concepts	2-6
2.5	A LAN for the NEACP Onboard Connectivity	2-6
3.	TECHNICAL REQUIREMENTS	3-1
3.1	Network Requirements	3-1
3.2	COTS Rationale	3-3
3.3	NEACP Onboard Connectivity	3-3
3.4	NOCN Capacity Requirements	3-7
3.4.1	Digital Data	3-7
3.4.2	Voice and Video	3-9
3.4.3	Combined Capacity Requirements	3-9
4.	DESIGN TRADEOFFS	4-1
4.1	Voice Switching Alternatives	4-1
4.1.1	Retain the Present Switching System	4-1
4.1.2	Replace Present System with Modern, Central Circuit Switches	4-2
4.1.3	Replace Present Switches with Distributed Switching System	4-2
4.1.4	Comparison of Voice Switching Alternatives	4-2
4.2	Extent of Network Switching Functions	4-3
4.2.1	ATSS Functions on the Bus	4-3
4.2.2	ATSS and MTSS Functions on the Bus	4-4
4.2.3	ATSS, MTSS, and SVSE Functions on the Bus	4-4
4.2.4	ATSS, MTSS, SVSE, and MPS Functions on the Bus	4-4
4.2.5	ATSS, MTSS, SVSE, MPS, and Video Functions on the Bus	4-4
4.2.6	Comparison of Extent of Network Switching	4-4
4.3	Transmission Media	4-13
4.3.1	Optical Fiber Cable	4-13
4.3.2	Coaxial Cable	4-13
4.3.3	Twisted-Wire Pair	4-14
4.3.4	Wireless	4-14

Section		Page
4.3.5	Comparison of Transmission Media	4-14
4.4	Network Protocols	4-14
4.4.1	IEEE 802.3 CSMA/CD	4-15
4.4.2	IEEE 802.4 Token Bus	4-15
4.4.3	IEEE 802.5 Token Ring	4-15
4.4.4	ANSI X3T9.5 FDDI	4-16
4.4.5	Comparison of Network Protocols	4-16
5.	RECOMMENDED CONCEPT	5-1
5.1	FDDI Standard	5-1
5.1.1	FDDI SMT	5-2
5.1.2	NOCN Station Management and NEACP Technical Control	5-3
5.2	Bus Interface Assemblies	5-3
5.2.1	Versa-Module Europe Interface Assembly	5-3
5.2.2	Node Processor Interface Assembly	5-5
5.3	SAFENET II - A LAN Standard Using FDDI	5-7
5.3.1	Status of SAFENET II	5-8
6.	COST ANALYSIS OF THE NOCN	6-1
6.1	Estimated Costs of Recommended Technologies	6-1
6.2	Cost Analysis	6-2
6.2.1	Methodology Framework	6-3
6.2.2	Sources of ME Cost Savings with NOCN	6-5
6.2.3	Additional Benefits of NOCN	6-6
6.2.4	10 Year Cost Estimate With and Without NOCN	6-8
7.	SUMMARY	7-1
7.1	NOC Quick Study Approach	7-1
7.2	Technical Alternatives	7-1
7.2.1	Voice Switching	7-1
7.2.2	Extent of Network Switching	7-3
7.2.3	Transmission Media	7-3
7.2.4	Network Protocols	7-4
7.3	Technical Recommendations	7-5
8.	CONCLUSIONS	8-1
9.	RECOMMENDATIONS	9-1
10.	GLOSSARY	10-1
	REFERENCES	
	APPENDICES	
	A - VME Cost Estimate	A-1
	B - Node Processor Cost Estimates	B-1
	DISTRIBUTION	
	DD FORM 1473	

ILLUSTRATIONS

Figure		Page
2-1	E-4B Aircraft	2-2
2-2	E-4B RED/BLACK Switching Systems Connectivity	2-5
2-3	Generic Bus	2-7
2-4	Conceptual Hierarchical Bus Configuration	2-9
3-1	NEACP Onboard Connectivity	3-5
4-1	ATSS Functions on Bus	4-5
4-2	ATSS and MTSS Functions on Bus	4-7
4-3	ATSS, MTSS, and SVSE Functions on Bus	4-9
4-4	ATSS, MTSS, SVSE, and MPS Functions on Bus	4-11
5-1	Example VME Interface Assembly	5-4
5-2	Example Node Processor Interface Assembly	5-6
6-1	Methodology Framework	6-4
6-2	10-Year Cost Estimate with and without NOCN	6-7
7-1	NOC Quick Study Comparisons	7-2

TABLES

Number		Page
3-1	NOCN Capacity Requirements: Digital Data	3-8
3-2	NOCN Capacity Requirements: Voice and Data	3-8
3-3	NOCN Capacity Requirements Summary	3-9

ABSTRACT

The operational availability of the E-4B fleet can be measurably improved by reducing the time of new C3 integrations and modifications on these aircraft. This quick study examines alternative ways to achieve greater flexibility and speed by which E-4B enhancements are installed through the use of broadband bus technology. A broadband bus will have sufficient bandwidth growth margin to meet current and future NEACP onboard connectivity user needs for voice, data, control, status and limited-motion video communications. An assessment of available technologies shows that fiber optics and the FDDI standard meet NEACP connectivity requirements. A cost analysis estimates NEACP onboard connectivity network (NOCN) costs. Also included is a methodology framework that outlines the steps necessary to determine the breakeven point of the NOCN, where the network will pay for itself through cost off-sets.

SECTION 1. INTRODUCTION

1.1 Background

System upgrades and equipment modifications to the E-4B aircraft are time-consuming, costly, and disruptive to operational schedules supporting the National Emergency Airborne Command Post (NEACP) mission. Modernization and retrofitting of aircraft communication and avionic systems are carefully scheduled and controlled to limit aircraft downtime to not more than one E-4B at a time. Extensions to aircraft modification schedules contribute to operational nonavailability as well as to added program costs. The ripout and integration costs associated with new aircraft work rise dramatically with new cable runs and rewiring to existing aircraft systems in different aircraft compartments. The need for additional wiring to interface with each new system integration or upgrade not only raises integration costs, but also increases aircraft weight and complicates wire runs on the aircraft. The net effect of new work to the E-4B fleet is a loss of aircraft operational availability for crisis management or emergency actions. A program to improve NEACP onboard connectivity by reducing integration time and costs without sacrificing work quality would add a significant measure of improved E-4B aircraft readiness.

The existing and planned information-distribution systems on the E-4B represent the extreme ends of electronic technology -- an installed analog voice switching system and a scheduled digital data busing system. Three voice switching systems: the automatic telephone switching system (ATSS), the manual telephone switching system (MTSS), and the secure voice switching element (SVSE), control all unclassified (BLACK) and classified (RED) voice switching demands on the E-4B. These voice switching systems have limited switch capacity growth margins and are potential candidates for future replacement. Under the message processing

system (MPS) program, all record traffic and data support systems will be connected to the MPS data bus.

Proposed changes to the NEACP onboard connectivity (NOC) must consider those operational constraints unique to the NEACP mission and hence inviolable. These stand-alone communication areas cover specific interphones, operator assistance, and work station communications. The flight crew interphone, service interphone, and cabin public address system must be able to operate independently of any E-4B connectivity in order to meet FAA safety-of-flight regulations (reference 1). In addition, off-hook telephone service remains a mandatory requirement to provide communications support for the National Command Authorities (NCA) and their embarked staff (reference 1). Lastly, each battlestaff and operator work station requires secure and nonsecure voice communications capability.

The current practice of independently hardwiring each new system and providing new interface adaptors to ensure compatibility and interoperability with existing aircraft systems adversely affects NEACP mission readiness in several different, yet related, ways:

a. Systems integration costs rise as more complex systems interface with existing aircraft systems.

b. Systems integration periods for these tailored hookups take longer and subsequently reduce aircraft operational availability.

c. New capabilities, which enhance the NEACP mission, are deferred until development of aircraft modification schedules.

d. The mix of interfaces on the aircraft increases troubleshooting time and delay rapid reconfiguration during major failures.

e. Additional wiring consumes space and adds weight to the aircraft.

1.2 Purpose

This study assesses and examines technical feasibility and cost issues for a NEACP onboard connectivity network (NOCN) to support existing and future E-4B communications and electronics systems.

1.3 Scope

The study addresses four principal areas directly tied to the NOCN: requirements, technologies assessment, recommended technology, and cost analysis.

a. Requirements identify the general network and NOCN capacity requirements and specify the rationale for using commercial-off-the-shelf (COTS) equipment.

b. Technologies assessment compares different generic local networking technologies and their responsiveness to meet the NOCN capacity requirements. This comparison leads to the recommended technology. Transmission media, access methods, and switching alternatives are discussed.

c. Recommended technology focuses on the technical approach considered best to meet current and future NOCN requirements.

d. Cost analysis assesses the costs of the recommended NOCN technologies and their integration on the E-4B.

SECTION 2. NEACP ONBOARD CONNECTIVITY

This section reviews NOC requirements for the E-4B aircraft: the aircraft's configuration, the elements of NOC connectivity, and the existing switching systems for NEACP mission support. Local area network (LAN) concepts are discussed for potential application on the E-4B.

2.1 The E-4B Aircraft

The E-4B aircraft houses the communications and decision-support systems for the NEACP battlestaff and the National Command Authorities (NCA). These systems, dispersed throughout the aircraft, interconnect over point-to-point wiring and connections. The number and diversity of wiring and connections contribute to the existing weight and space limitations for additional system integrations on the aircraft. General system integration guidance necessitates removal of equal or additional weight before system integration of new or modified equipment on the E-4B.

The twelve major areas of the E-4B aircraft are functionally identified in figure 2-1. Areas 7, 8, and 11 (communications control, technical control, and aft lower equipment) contain most of the communications equipment which supports the NEACP mission. A typical mission system on the E-4B has equipment components installed in three or more areas. Interconnecting these and other systems requires a network which spans the length of the entire aircraft.

2.2 Required Onboard NEACP Connectivity

The connectivity requirements on the NEACP aircraft reflect the range of communications services and numbers of equipment for mission support

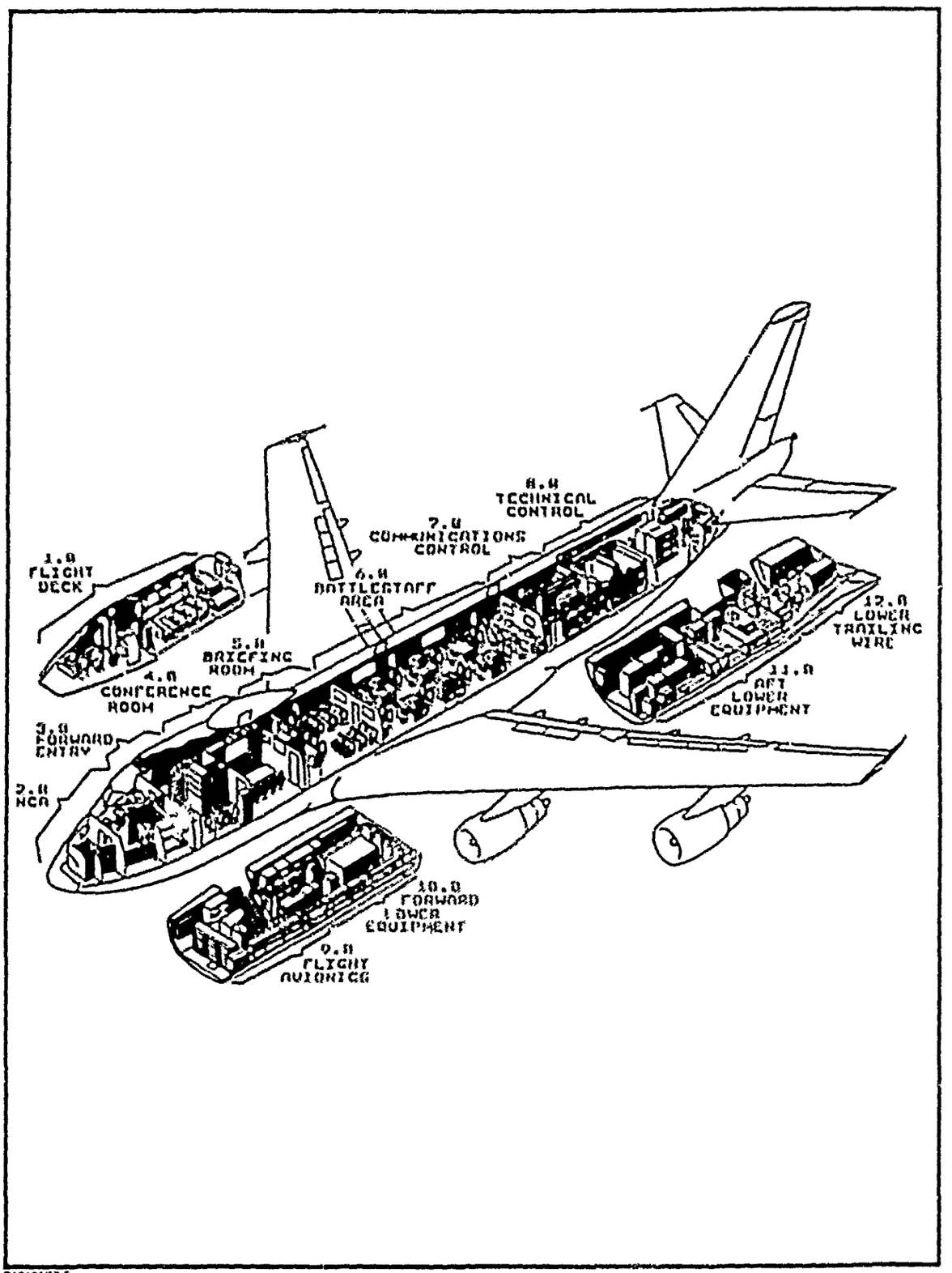

G10105GTIF

Figure 2-1. E-4B Aircraft

that have evolved over 25 years of NEACP operations. All communications and support equipment, and peripherals connect directly or indirectly through the communication patching facility (CPF), the technical control for the E-4B aircraft. The CPF serves as the central control point for the transmission and receipt of all internal as well as external communications. Several unique onboard connectivity requirements are discussed in the following paragraphs.

a. Safety-of-flight. Hardware installations which affect the safety-of-flight must meet FAA regulations. These communication-electronics systems such as the flight crew interphone, service telephone, and cabin public address system must operate independently to meet the FAA safety-of-flight considerations.

b. Off-hook Phones. These services must be available at all times for the NCA, NCA staff, and embarked passengers. This capability allows communication support for passengers not trained in the use of onboard communications systems as well as direct assistance to the NEACP team.

c. Secure Communications. Secure (RED) and nonsecure (BLACK) communications take place in the same compartments on board the aircraft. Consequently, the RED telephone system must be separated physically and electrically from nonsecure services.

d. Data Communications. The data communications operators handle all data and record traffic on the aircraft. Hard copies of all incoming and outgoing traffic to and from the NEACP battlestaff or NCA spaces are handcarried. In the next scheduled E-4B modification, the message processing system (MPS) installation connects all record and data communications equipment to a common MIL-STD-1553B bus and automates many of the manual message processing functions.

The E-4B system specification (last updated in 1981) identifies the spectrum of communication systems to support the NEACP. Additional information-distribution systems, which have been added or removed to meet Joint Staff-mandated operational requirements, are required to meet FAA requirements for safety-of-flight and military specifications for mission performance.

2.3 NEACP Switching Systems

The secure and nonsecure voice switching systems on the NEACP aircraft have evolved incrementally as determined by changing requirements. An automatic telephone switching system (ATSS), built in 1963, provides semi-automatic switching of voice signals between subscribers and external communication channels. In 1974, a manual telephone switching system (MTSS) was added to provide operator-assisted service to onboard subscribers. The secure voice switching assembly (SVSA) was added in 1979 and was expanded from a 20 to a 28-channel switch in 1982. A link select assembly (LSA) was added to the secure voice switching system to connect encrypted signals from selected security devices to the transmission media.

Figure 2-2 illustrates the current voice switching architecture which provides physically and electrically separated secure and nonsecure voice communication paths to prevent inadvertent transmission of secure voice communications over nonsecure lines. The secure voice attendant control actively manages all secure voice communications on the E-4B's RED phone system. Outgoing phone calls are encrypted by voice security devices (VSDs) connected to RED patchfields in the communications patching facility (CPF) for subsequent interfacing to the media by the LSA, or directly to the transmission media. Incoming secure voice calls follow the reverse path. All nonsecure voice communications among aircraft subscribers are via the interphone system or through the nonsecure ATSS or MTSS switches. In addition, the RED/BLACK patching capability

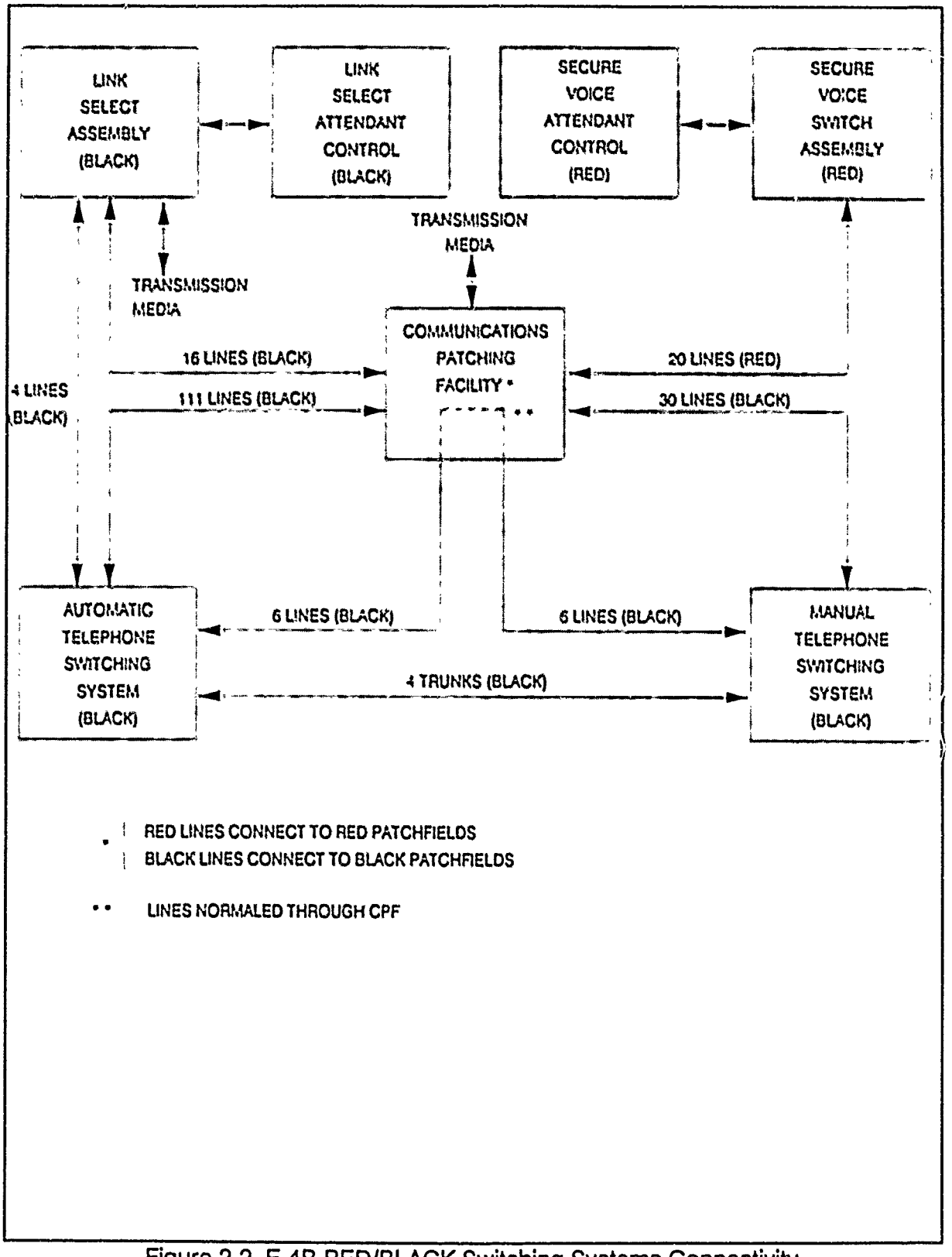

Figure 2-2. E-4B RED/BLACK Switching Systems Connectivity

resident in the CPF affords additional flexibility in alternative routing of secure and nonsecure voice calls.

The voice switching system on the E-4B meets the current operational requirements of the NEACP and the NCA. These analog voice switching system functions must be individually retained or be absorbed by a total replacement digital switching scheme for the E-4B.

2.4 Local Area Network Concepts

A NOCN developed around a generic bus would provide connectivity throughout the aircraft, thereby reducing or eliminating the need for separate wiring between aircraft areas for information-handling systems. A broadband bus or local area network (LAN) could provide the vehicle for exchanging information between physically separated units on the aircraft.

Bus interface (BI) units can translate protocols and physical data links between the mission equipment (ME) and the network. The bus interface shown in figure 2-3 consists of interface cards that provide the functionality for the ME components to communicate as well as multiplex control and status signals to the bus. As shown in the figure, a single BI may support multiple equipment connections simultaneously.

Three types of physical connections are available for the BI. In the first case, the ME accesses the network directly through its own interface connection. For the second case, short lengths of interface cable connect the mission equipment to the BI. For the third case, the BI becomes an integral part of a standard equipment rack which contains the interface connections for mission equipment.

2.5 A LAN for the NEACP Onboard Connectivity

LAN configurations can be linear, a ring, a star, or a hybrid combination of these basic technologies. The concept under investigation for the NEACP is a hybrid combination to serve the physical layout of the ME. An

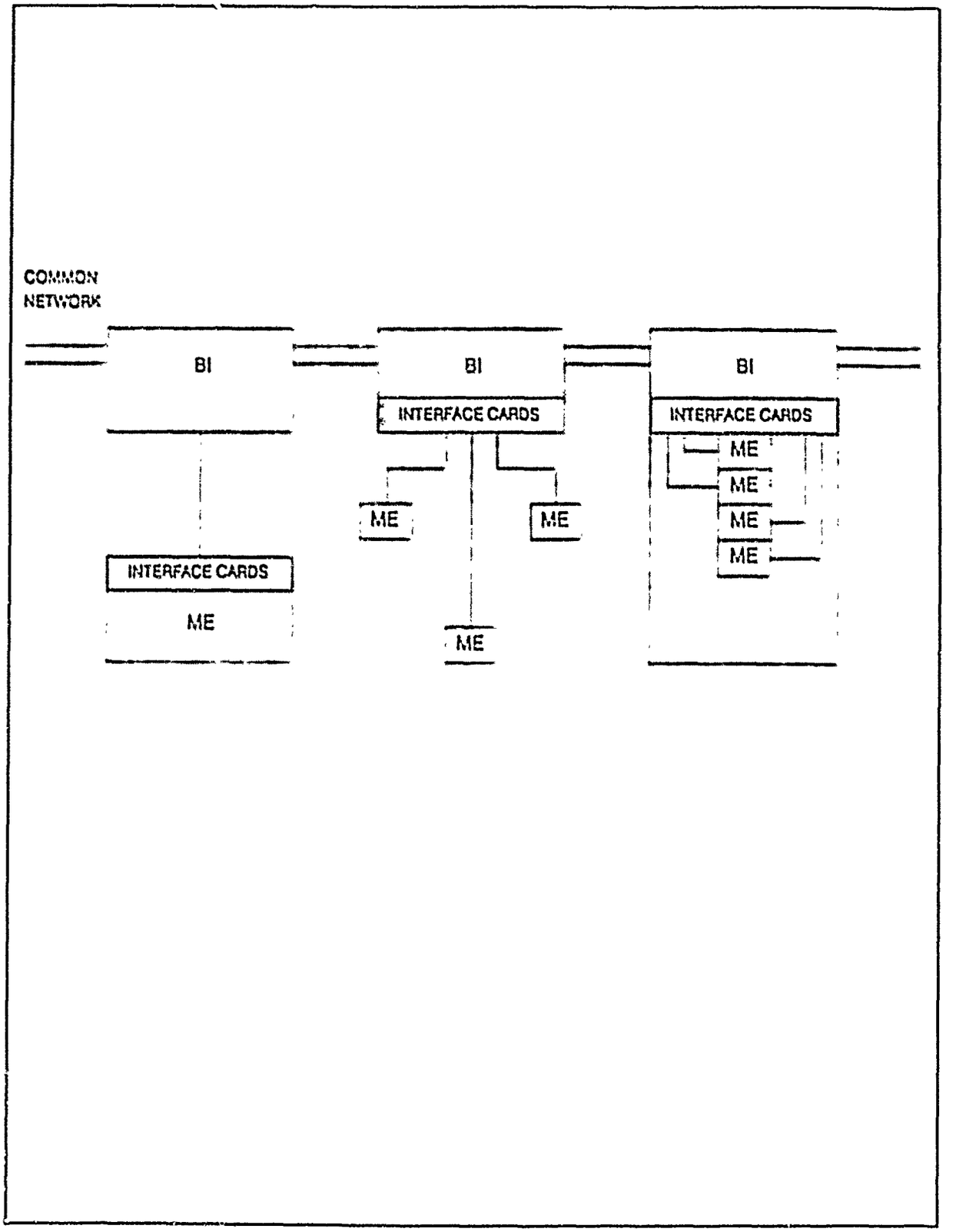

Figure 2-3. Generic BUS

example of a hybrid is the hierarchical bus configuration illustrated in figure 2-4, sometimes referred to as a "ring-of-trees" configuration.

The ME on the NEACP is in clusters distributed throughout the compartments of the aircraft. The intracompartmental connectivity can be provided by suitable networks, and intercompartmental connectivity can be provided by a backbone network. Bus interfaces may also be required for the subnetworks depending on the selected subnetwork architecture. These BIs are not necessarily the same BIs as for the backbone network. The backbone network, with a higher capacity than the subnetworks, can provide connectivity between the subnetworks, as well as accommodate high data rates and special-purpose signals, such as for control and status.

The generic bus concepts described in this section offer a realistic opportunity for a flexible and rapid means of connecting new C3 systems to the NOCN. A common bus with standard interfaces would simplify installation of new systems.

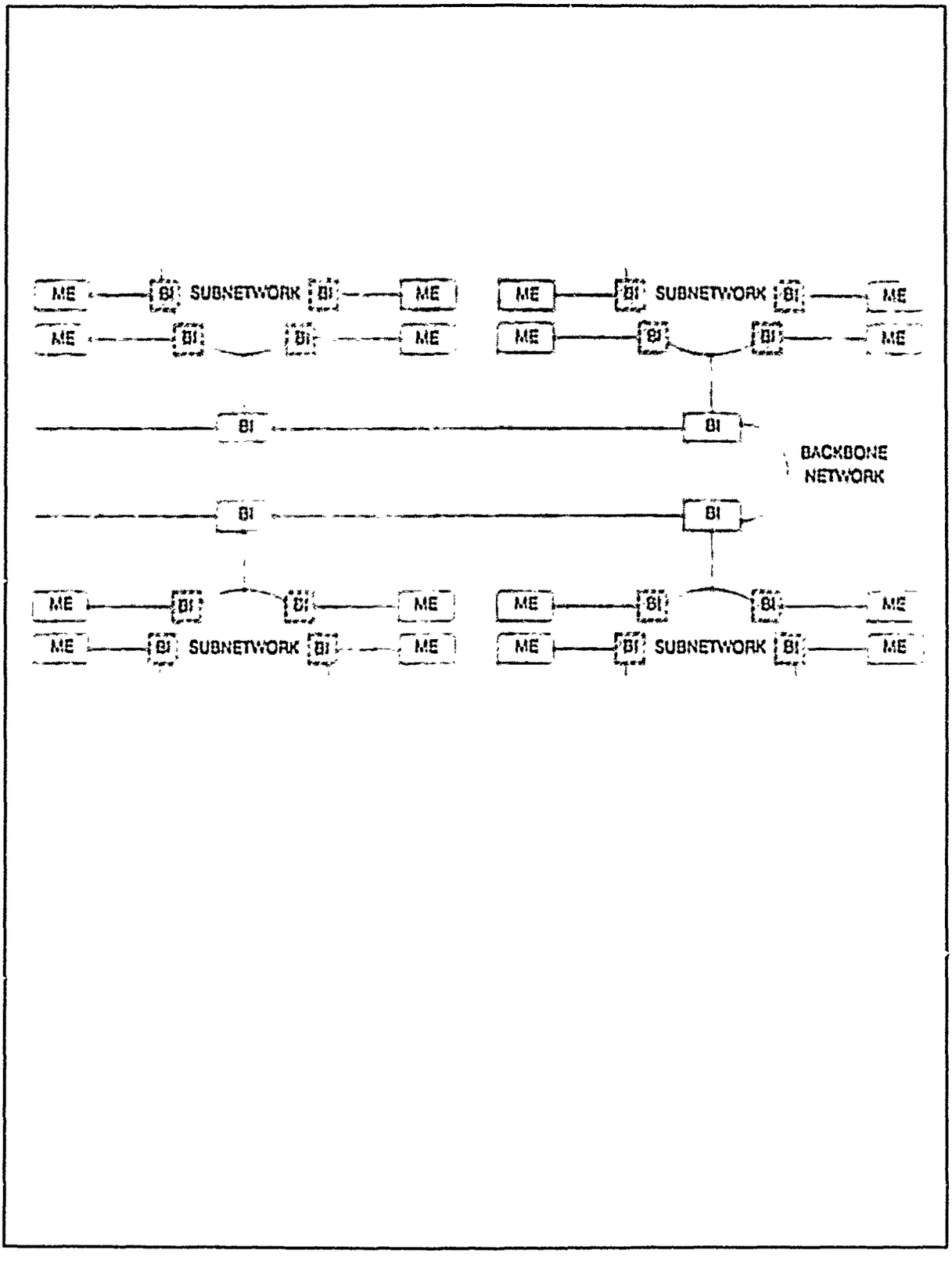

Figure 2-4. Conceptual Hierarchical Bus Configuration

SECTION 3. TECHNICAL REQUIREMENTS

The factors influencing the NOCN concept are reviewed in this section. They include the constraints on the network requirements, emphasis on the use of COTS equipment, projected NOCN connectivity requirements, and the estimated capacity requirements for the future NOCN network.

3.1 Network Requirements

The NOCN must meet the following minimum requirements for E-4B operations:

a. Data Rate/Services. Network data rate capacity and services must support the NEACP digital data/voice/video connectivity requirements at the time of integration and for the following 10 years.

b. COTS/NDI. Selected COTS equipment or nondevelopment items (NDI) must conform to approved standards including the Government Open Systems Interconnection Profile (GOSIP), where possible.

c. Security. Different classification levels of data must be handled in a secure fashion, including: UNCLASSIFIED, CONFIDENTIAL, SECRET, TOP SECRET, TOP SECRET/Sensitive Compartmented Information (TS/SCI), and Single Integrated Operational Plan (SIOP) information. The network must be partitioned for different security ranges or operate as a multilevel secure network.

d. Interfaces. Interfaces must be implemented between the ME and the network. These interfaces may be based on military, national, or international standards and hence would be readily

available in COTS equipment. Other ME components may require that special interfaces be developed to interface the network.

e. Growth. The NOCN must meet the changing requirements of the NEACP and allow for network growth or reconfiguration. The network must have the capacity and services to meet the requirements of interconnecting future systems.

f. Reliability. A reliable, functioning network is critical to operational performance to meet mission operations and to minimize downtime. A network management capability to monitor and configure network resources, with reconfigurable or replaceable modules to maintain operations, must be incorporated in the NOCN.

g. Weight/Space. The network installation must minimize weight and space by limiting bulky, point-to-point cabling, excess redundant equipment, and use of large and heavy network components.

h. Environmental. The Federal Aviation Administration (FAA) and military organizations have developed requirements for equipment on an aircraft. The NOCN must conform to these requirements by being able to operate in an airborne environment, be immune from and not contribute to electromagnetic interference (EMI) and radio frequency interference (RFI), and be protected against specified nuclear effects such as electromagnetic pulse (EMP) and radiation. Environmental requirements include ensuring that ME can withstand extremes in temperature, pressure, shock, vibration, and other conditions.

3.2 COTS Rationale

The use of COTS equipment conforming to the prevailing industry standards ensures relatively low procurement costs and flexible installations, since many products will provide different capabilities for the NOCN. A mature market can provide a suite of components using the latest technology, which may be military qualified. Off-the-shelf components provide a ready stock for replacements, thus lessening government logistics efforts to maintain spares due to the number of COTS manufacturers that conform to the same standards. Product documentation and maintenance agreements are available by manufacturers of COTS components.

Government agencies are mandated to migrate toward the GOSIP standards when developing network systems. GOSIP was approved as Federal Information Processing Standard 146 in August 1988, and its use will be mandatory for the Federal Government beginning in August 1990 (reference 2). These standards provide the basis for new technology insertion and also facilitate interoperability between developed networks, thereby reducing the risk of technical obsolescence.

3.3 NEACP Onboard Connectivity

The NEACP onboard connectivity matrix in figure 3-1 establishes the initial cross-connects between systems identified for an integrated voice and data bus on the E-4B. The footnotes on the illustration identify those factors with partial or intermediate connectivity. This initial review of the NEACP onboard connectivity indicates the type of voice or data signaling functions required at each connection.

THIS PAGE INTENTIONALLY LEFT BLANK

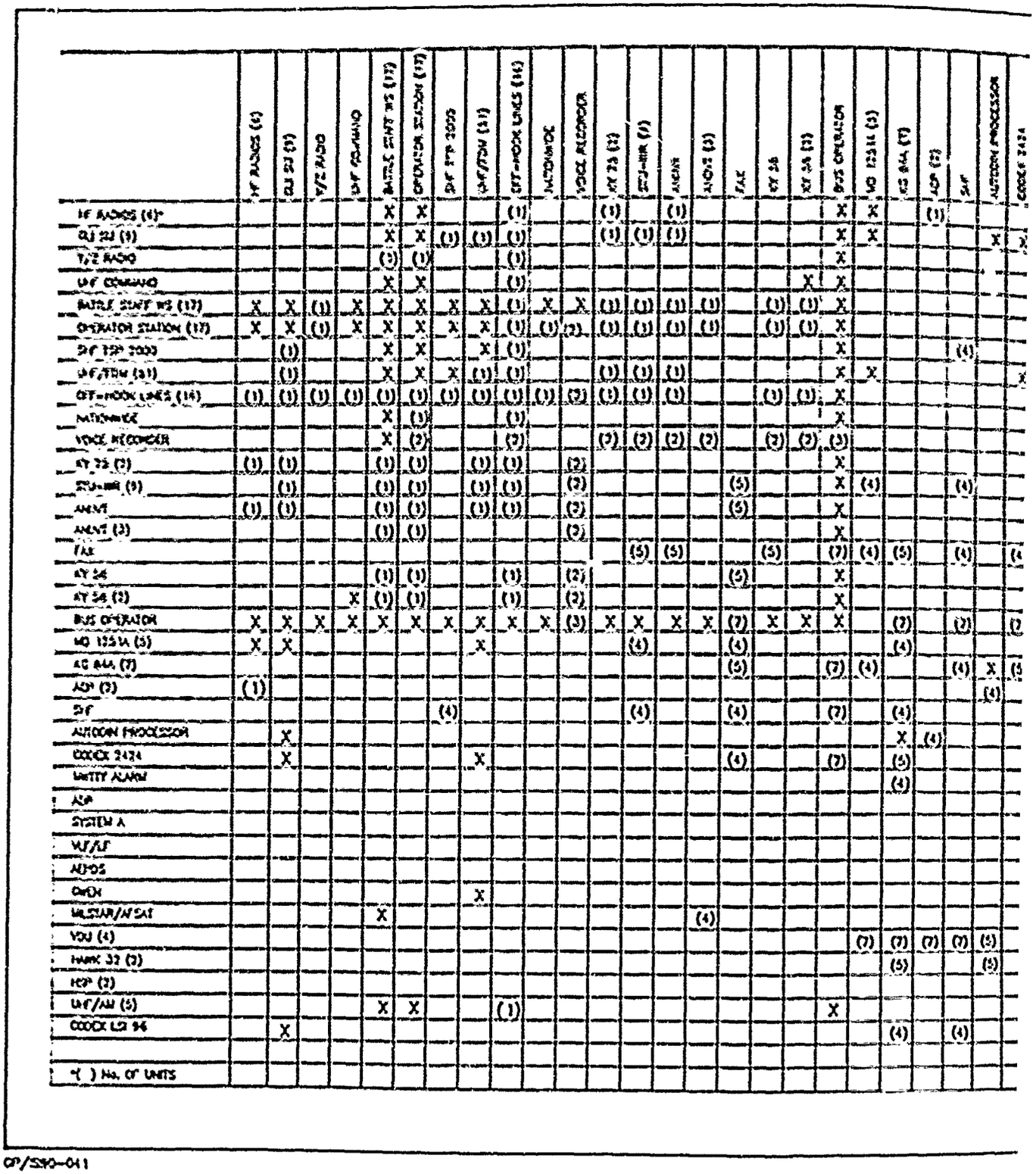

	HF RADIOS (6)	GLI SIJ (9)	Y/Z RADIO	UHF COMMAND	BATTLE STAFF WS (17)	OPERATOR STATION (17)	SHF TSP 2000	UHF/FDM (51)	OFF-HOOK LINES (16)	NATIONWIDE	VOICE RECORDER	KY 75 (2)	STU-III (9)	ANDVT	ANDVT (3)	FAX	KY 58	KY 58 (2)	BUS OPERATOR	MD 1251A (5)	KG 84A (7)	ADP (2)	SHF	AUTODIN PROCESSOR	CODEX 2424
HF RADIOS (6)*					X	X			(1)			(1)		(1)					X	X		(1)			
GLI SIJ (9)					X	X	(1)	(1)	(1)			(1)	(1)	(1)					X	X				X	X
Y/Z RADIO					(1)	(1)			(1)										X						
UHF COMMAND					X	X			(1)									X	X						
BATTLE STAFF WS (17)	X	X	(1)	X	X	X	X	X	(1)	X	X	(1)	(1)	(1)	(1)		(1)	(1)	X						
OPERATOR STATION (17)	X	X	(1)	X	X	X	X	X	(1)	(1)	(2)	(1)	(1)	(1)	(1)		(1)	(1)	X						
SHF TSP 2000		(1)			X	X		X	(1)										X				(4)		
UHF/FDM (51)		(1)			X	X	X	(1)	(1)			(1)	(1)	(1)					X	X					X
OFF-HOOK LINES (16)	(1)	(1)	(1)	(1)	(1)	(1)	(1)	(1)	(1)	(1)	(2)	(1)	(1)	(1)			(1)	(1)	X						
NATIONWIDE					X	(1)			(1)										X						
VOICE RECORDER					X	(2)			(2)			(2)	(2)	(2)	(2)		(2)	(2)	(3)						
KY 75 (2)	(1)	(1)			(1)	(1)		(1)	(1)		(2)								X						
STU-III (9)		(1)			(1)	(1)		(1)	(1)		(2)					(5)			X	(4)			(4)		
ANDVT	(1)	(1)			(1)	(1)		(1)	(1)		(2)					(5)			X						
ANDVT (3)					(1)	(1)					(2)								X						
FAX													(5)	(5)			(5)		(7)	(4)	(5)		(4)		(4
KY 58					(1)	(1)			(1)		(2)					(5)			X						
KY 58 (2)				X	(1)	(1)			(1)		(2)								X						
BUS OPERATOR	X	X	X	X	X	X	X	X	X	X	(3)	X	X	X	X	(7)	X	X	X		(7)		(7)		(7
MD 1251A (5)	X	X						X					(4)			(4)					(4)				
KG 84A (7)																(5)			(7)	(4)			(4)	X	(5
ADP (2)	(1)																							(4)	
SHF							(4)						(4)			(4)			(7)		(4)				
AUTODIN PROCESSOR		X																			X	(4)			
CODEX 2424		X						X								(4)			(7)		(5)				
MWTTY ALARM																					(4)				
ADP																									
SYSTEM A																									
VLF/LF																									
AEPDS																									
OWEN								X																	
MILSTAR/AFSAT					X										(4)										
VDU (4)																				(7)	(7)	(7)	(7)	(5)	
HAWK 32 (2)																					(5)			(5)	
HSP (2)																									
UHF/AM (5)					X	X			(1)										X						
CODEX LSI 96		X																			(4)		(4)		
*( ) No. OF UNITS																									

GP/S90-041

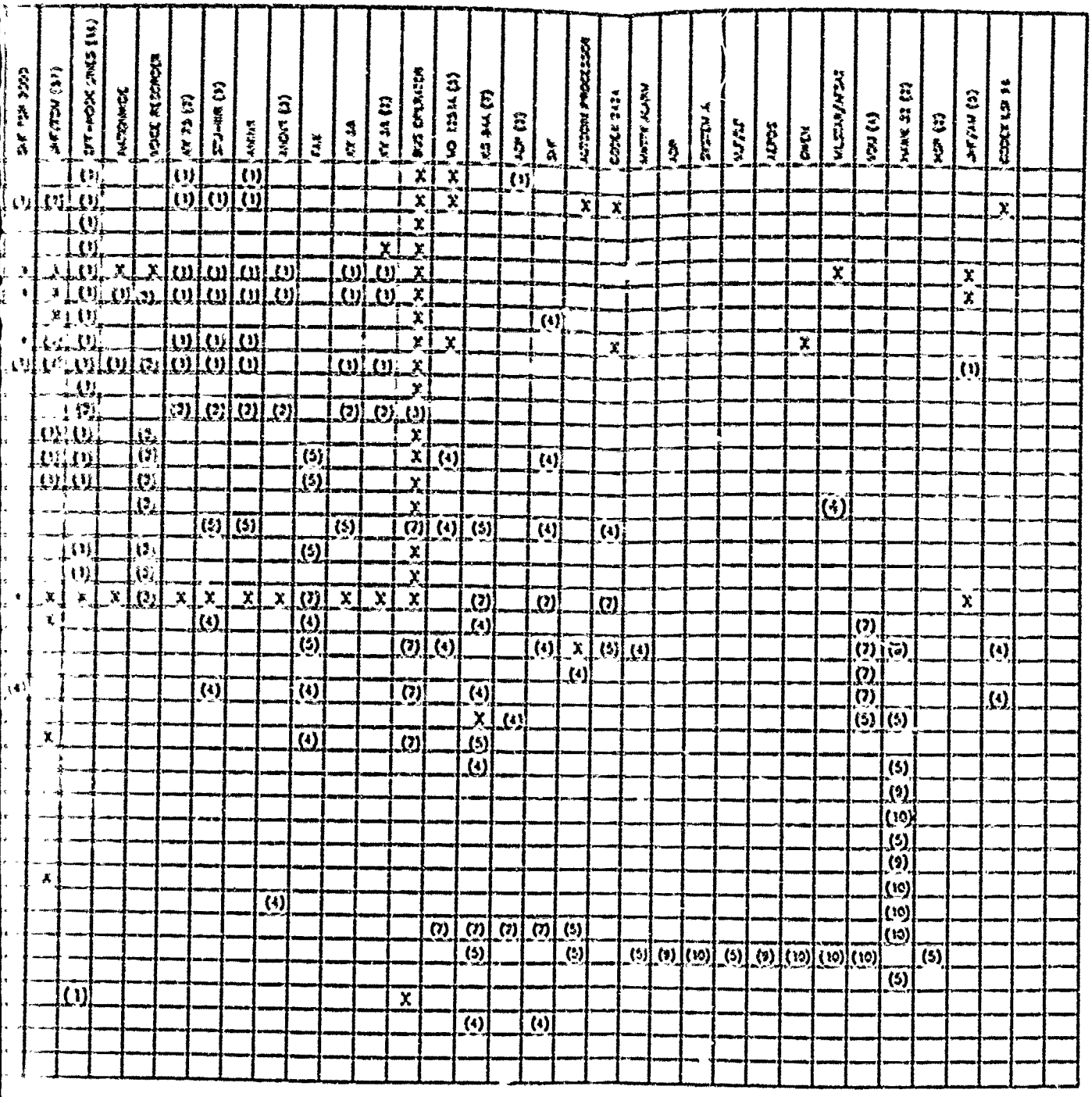

(1) Connect
(2) Record
(3) Record
(4) Black di
(5) Red digi
(7) For cont
(8) Control
(9) Not yet
(10) Red digi
(11) Two I-F

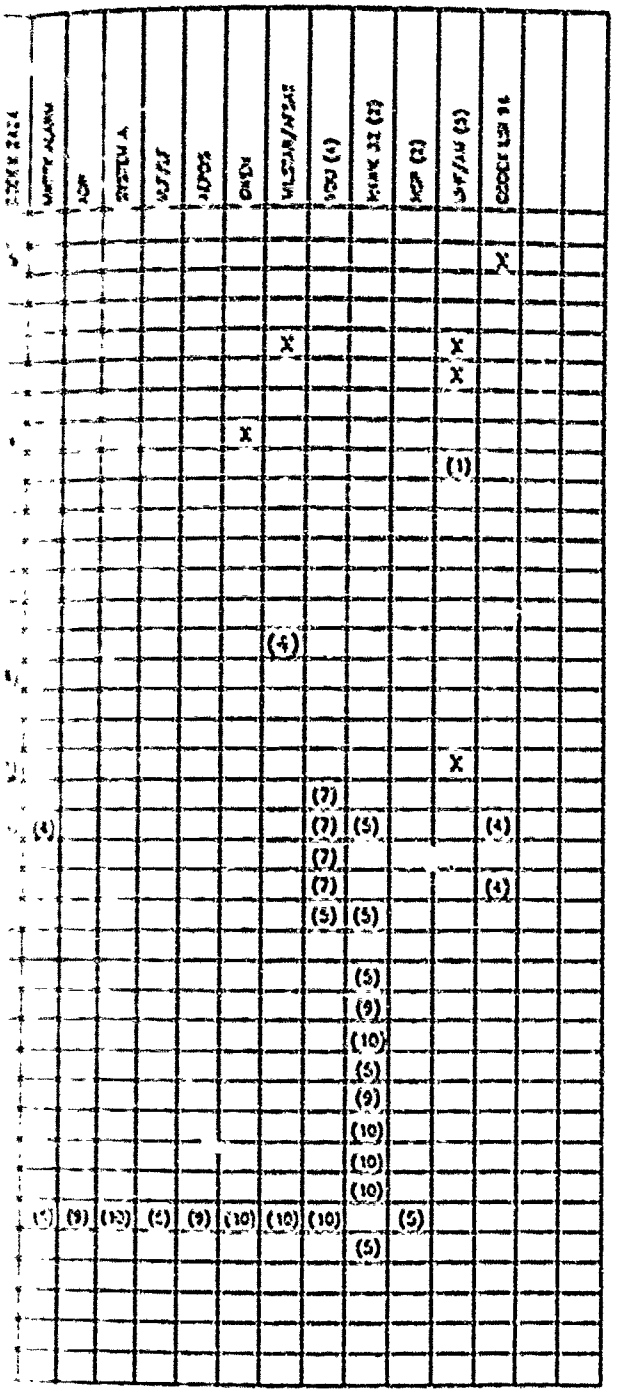

(1) Connection is via the bus operator

(2) Record only

(3) Record and playback via the bus operator

(4) Block digital connection

(5) Red digital connection

(7) For control of interconnections

(8) Control function only

(9) Not yet defined

(10) Red digital I/O and control

(11) Two HF radios only

Figure 3–1. NEACP Onboard Connectivity

3.4 NOCN Capacity Requirements

Projected digital data, voice, and video bit rates for handling the current and projected NOCN capacity requirements are summarized in the following subparagraphs.

3.4.1 Digital Data. The NOCN must support all digital/data capacity requirements on the E-4B (see table 3-1). The automated data processing (ADP) system, which provides the processing for the Nuclear Planning and Execution System (NPES) and special-purpose strategic warning information, receives warning inputs via the MPS and transmits, as outputs, information screens that are displayed on battlestaff terminals (reference 3). If the NOCN is to provide this connectivity, the processor-to-battlestaff terminal connectors would require, at most, 16 Mbps capacity. Connectivity for the planned Automated Emergency Action Message (EAM) Processing and Dissemination System (AEPDS) is assumed to require similar capacity for its terminal-to-workstation connections. Both ADP and AEPDS require connectivity either directly to each of the record communications systems or to the MPS for inputs. The MPS, which supports record communications and data traffic, uses a MIL-STD 1553B bus design and has a capacity of 1 Mbps (reference 4). Most ME, especially the radios, may require point-to-point, remote control connections, which would be carried on the network at typically low data rates (i.e., 1 bps or lower). It is assumed that no more than 500 of these connections may be required for a capacity of 500 bps.

The network must adapt to future capacity requirements. Limited-motion video teleconferencing provides acceptable picture quality for face-to-face conferencing at relatively low data rates (64-256 kbps). Future network connectivity may require high speed services for video conferencing and new systems.

Table 3-1. NOCN Capacity Requirements: Digital Data

Capabilities	Type of Traffic	Estimated Data Rate
Future AOP (NPES & Warning)	Display Updates File Transfers Interactive, "Bursty"	16 Mbps
AEPDS	Similar Traffic	16 Mbps
MPS/All Record Comm	Message Oriented	1 Mbps
Control Signals	Very Low Data	500 bps
Growth: Video Teleconferencing	Real-time Compressed Video with Interactive Graphics	64 - 256 kbps
Other Growth	To Be Determined	10 - 20 Mbps
	Total:	43 - 53 Mbps

Table 3-2. NOCN Capacity Requirements: Voice and Video

Capability	Type of Traffic	Bandwidth/Data Rate (Per Channel)	No. of Channels	Estimated Data Rate
Secure Voice	Voice	3 kHz/32 or 64 kbps	20	0.64-1.28 Mbps
Non-Secure Voice	Voice	3 kHz/32 or 64 kbps	54	1.73-3.46 Mbps
Growth	Voice	3 kHz/32 or 64 kbps	26	0.83-1.66 Mbps
			100 (Voice)	3.2- 6.4 Mbps
Cable News	NTSC Analog	6 MHz/80 Mbps	1 (Video)	80 Mbps
		Total Data Rate (Voice and Video):		83 - 86 Mbps

3.4.2 Voice and Video. Estimated voice and video bit-rate requirements are shown in table 3-2. The voice system must include the ability for onboard personnel to communicate among themselves and also set up circuits via the radios for connectivity to the ground and to other platforms. Voice connectivity is both secure and nonsecure. Quality digitized voice is typically either 32 kbps CVSD (Continuous variable-slope delta modulation), 32 Kbps ADPCM (adaptive differential pulse code modulation) or 64 kbps PCM (pulse code modulation).

A broadcast video system is currently unavailable on the NEACP aircraft. A requirement exists for broadcast quality video distribution of Cable News Network (CNN), now provided at many fixed command centers. The network must either distribute the high-speed digitized video (estimated at 80 Mbps) or provide the analog bandwidth (6 MHz) to distribute the video.

3.4.3 Combined Capacity Requirements. The frequency bandwidth requirements to meet current and projected NOCN capacity requirements are summarized in table 3-3.

Table 3-3. NOCN Capacity Requirements Summary

	Estimated Data Rate
Digital Data	43 - 53 Mbps
Voice (100 channels)	3.2 - 6.4 Mbps
Full Motion Video (1 channel NTSC, 6 MHz)	80 Mbps
Total:	126 - 139 Mbps

The summary provides an estimate of capacity requirements sufficient to accommodate present systems and future growth. Digital data capacity requirements are on the order of 43-53 Mbps. Digitized voice transmission requirements are estimated to be between 3.2-6.4

Mbps. An additional full-motion video channel equivalent to 80 Mbps may also be required. This provides a NOCN capacity requirements data range between 126-139 Mbps.

SECTION 4. DESIGN TRADEOFFS

Section 2 introduced the concept of using a broadband bus or local area network (LAN) to provide a simpler and quicker means for future integrations on the E-4B aircraft. A LAN architecture offers the potential for reducing costs of E-4B modifications and improving reliability and maintainability of future E-4B communication-electronics systems. Design tradeoffs were considered in voice switching, the extent of network switching functions, transmission media, and network protocols. Sections 4.1 through 4.4 discuss the tradeoff analyses. Section 5 describes the recommended concept.

4.1 Voice Switching Alternatives

Three alternatives were analyzed for switching voice information on the NEACP, based on the existence of a broadband bus or local area network, referred to as NOCN in this report. These alternatives are:

a. Retain the present switching system
b. Replace the present switches by newer, central switches
c. Replace present switch by distributed, virtual circuit switches.

Each alterative is summarized below in subsections 4.1.1 through 4.1.3 and the alternatives compared are in subsection 4.1.4.

4.1.1 Retain the Present Switching System. This alternative contains two variations: (1) connect the voice switching system to the NOCN, or (2) do not connect the voice switching system to the NOCN. In both cases, the existing switches are adequate for meeting current mission performance, but they have the following drawbacks:

a. Increasingly difficult to logistically support
b. Limited growth potential

c. Bulky and heavy, occupying space and weight better used by required new mission systems.

Keeping the present switching configuration in the presence of a NOCN achieves no switching advantages. By connecting the present system to the NOCN, all of the benefits of NOCN connectivity are available, but the drawbacks listed above still exist.

4.1.2 Replace Present Switches with Modern, Central Circuit Switches. New digital switches are available for replacing the voice switches on the E-4B. Available products include general-purpose militarized switches or specially designed switches such as a modification to the Digital Airborne Information Switching System (DAISS) installed on the Commander in Chief (CINC) Airborne Command Posts (ABNCPs). Each case would eliminate or reduce the drawbacks listed in subsection 4.1 above.

4.1.3 Replace Present Switches with Distributed Switching System. In a distributed switching system, the switching functions are distributed among the different network nodes, thereby reducing the probability of a single-point digital switching failure. In this alternative, the existing voice switches would be removed and the switching functions incorporated into the access software of the nodes distributed throughout the aircraft.

4.1.4 Comparison of Voice Switching Alternatives. These three voice switching alternatives represent a cross-section of choices for the E-4B. Retaining the existing switching system provides the least-cost approach in the short term and defers necessary advanced planning for a later date. The use of centralized digital switching requires tailoring existing switch designs to meet NEACP's requirements with growth margins constrained to the switch design. The last alternative provides the greatest degree of technical and operational flexibility and future

growth potential by integrating the switching requirements into the bus nodes. Implementing the first alternative could be a major step toward achieving the third alternative.

4.2 Extent of Network Switching Functions

The future communications switching and processing elements on the NEACP aircraft will consist of the functions provided by the present automatic telephone switching system (ATSS), the manual telephone switching system (MTSS), the secure voice switching element (SVSE), and the message processing system (MPS). In addition, a required operational capability (ROC) has been validated for a full-motion video capability. Each system introduces a new set of unique requirements which increases bus complexity as each system is added to the bus. Below are the various alternatives, listed in increasing order of complexity, which were analyzed for inclusion on the NOCN bus:

a. ATSS functions on the bus
b. ATSS and MTSS functions on the bus
c. ATSS, MTSS, and SVSE functions on the bus
d. ATSS, MTSS, SVSE, and MPS functions on the bus
e. ATSS, MTSS, SVSE, MPS, and video functions on the bus.

Subparagraphs 4.2.1 through 4.2.5 analyze the impact of these alternatives on the bus and subparagraph 4.2.6 compares them.

4.2.1 ATSS Functions on the Bus. Inclusion of the ATSS on the bus interconnects BLACK audio lines servicing the battlestaff, operator positions, and selected systems. The MTSS, SVSE, and MPS retain their individual functions while interfacing with the bus over BLACK audio interfaces. This first approach, shown in figure 4-1, eliminated the need for ATSS and consolidates the automatic switching functions on the bus.

4.2.2 ATSS and MTSS Functions on the BUS. The second alternative expands the bus for incorporating the MTSS functions while retaining the existing bus connectivity for the SVSE and MPS. The bus remains BLACK audio. However, a voice operator position must now be added to assist the battlestaff, provide off-hook services to passengers, and intercept incoming calls. This position could be the same voice operator position currently on the E-4B. Figure 4-2 illustrates this approach.

4.2.3 ATSS, MTSS, and SVSE Functions on the Bus. Under the third approach, secure (RED) voice is added to the bus as displayed in figure 4-3. Bus operator duties must now be expanded to answer, intercept, and seize RED and BLACK audio lines. With SVSE incorporated on the bus, separation of secure and nonsecure voice becomes a bus requirement.

4.2.4 ATSS, MTSS, SVSE, and MPS Functions on the Bus. The fourth alternative incorporates the MPS data and control functions on the bus. This integrated voice and data network must now be tailored to meet the individual data and timing requirements for information exchange. With the MPS functions incorporated, the bus supports voice, data, and control signals for the entire bus. Figure 4-4 depicts the expected bus connectivity for an integrated voice and data network.

4.2.5 ATSS, MTSS, SVSE, MPS, and Video Functions on the Bus. The last alternative extends the bus loading by including full-motion video on the bus which affects available bandwidth.

4.2.6 Comparison of Extent of Network Switching. The analysis shows that the bus complexity increases as voice switching functions, data distribution, and video are added to the bus. The bus handles only BLACK audio connectivity with both ATSS and MTSS functions on the bus. With the addition of the SVSE, the bus carries RED and BLACK audio which requires isolation of secure and nonsecure information across the bus. The addition of MPS to the bus adds both RED and BLACK data for an

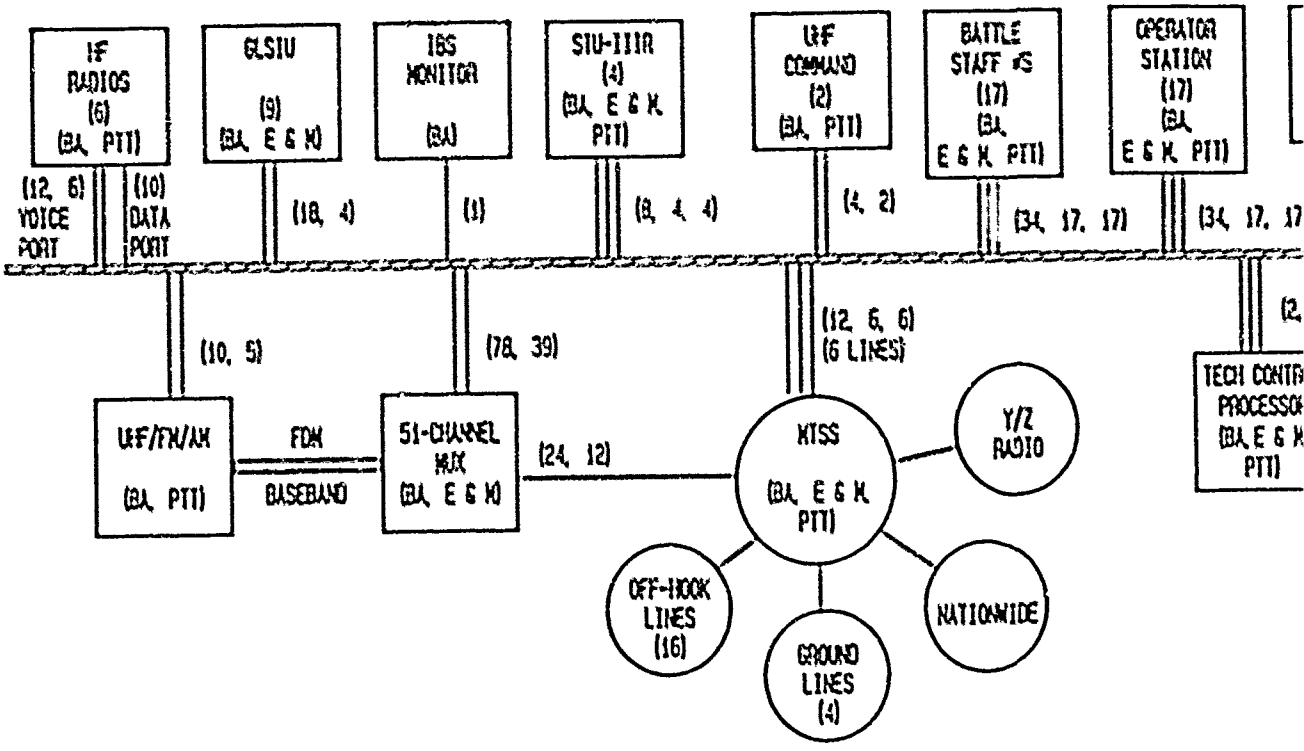

LEGEND

BA - BLACK AUDIO
E & M - SIGNALING
PTT - PUSH-TO-TALK
(X, Y, Z) - NUMBER OF PAIRS OF EACH INFORMATION TYPE (E.G., BA, E & M, PTT)
PB - PLAYBACK CHANNEL
LSAC - LINK SELECT ATTENDANT CONTROL

0610106H/S90-041

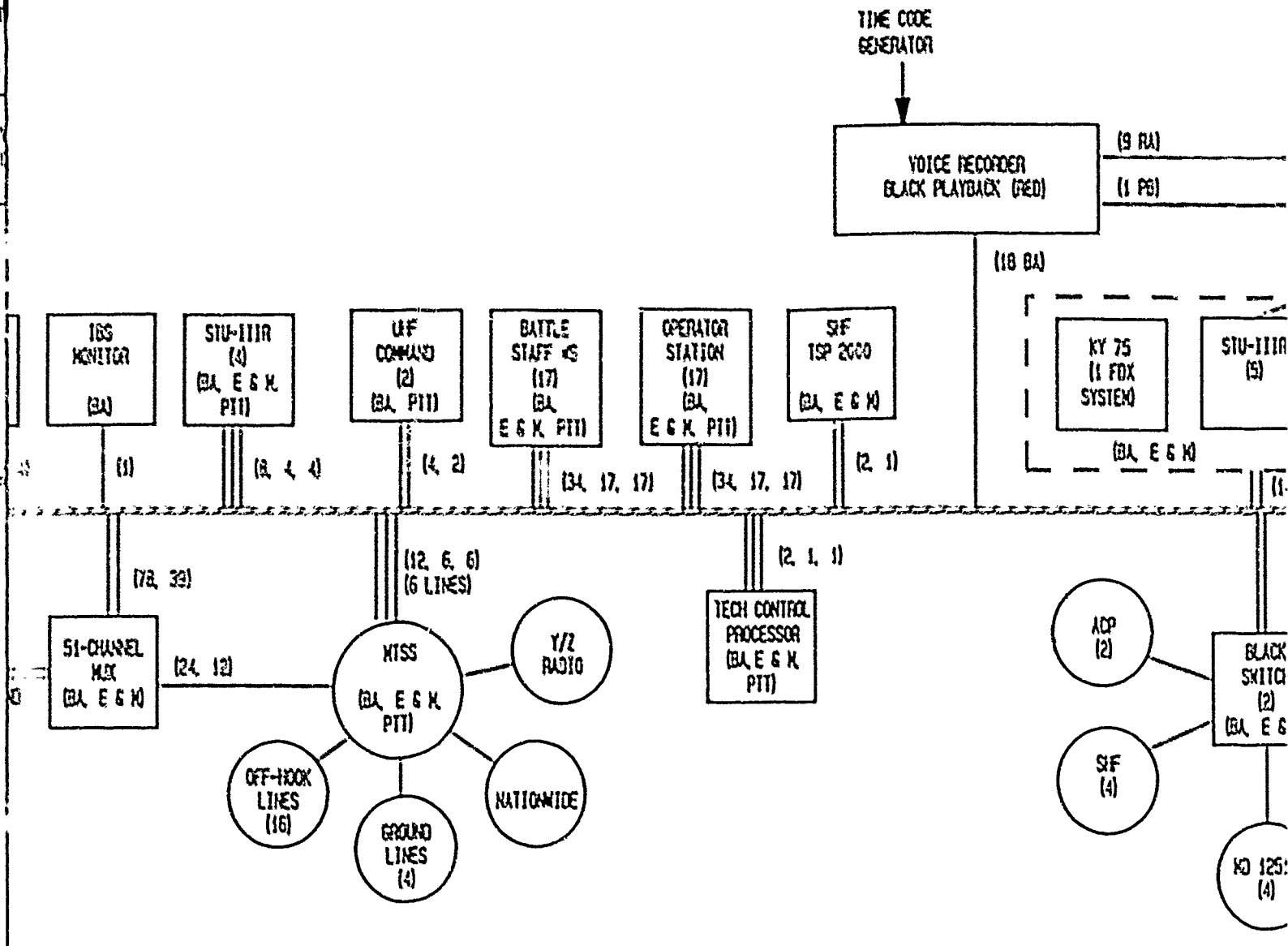

IS OF EACH INFORMATION TYPE
; M, PTT)
IEL
TENDANT CONTROL

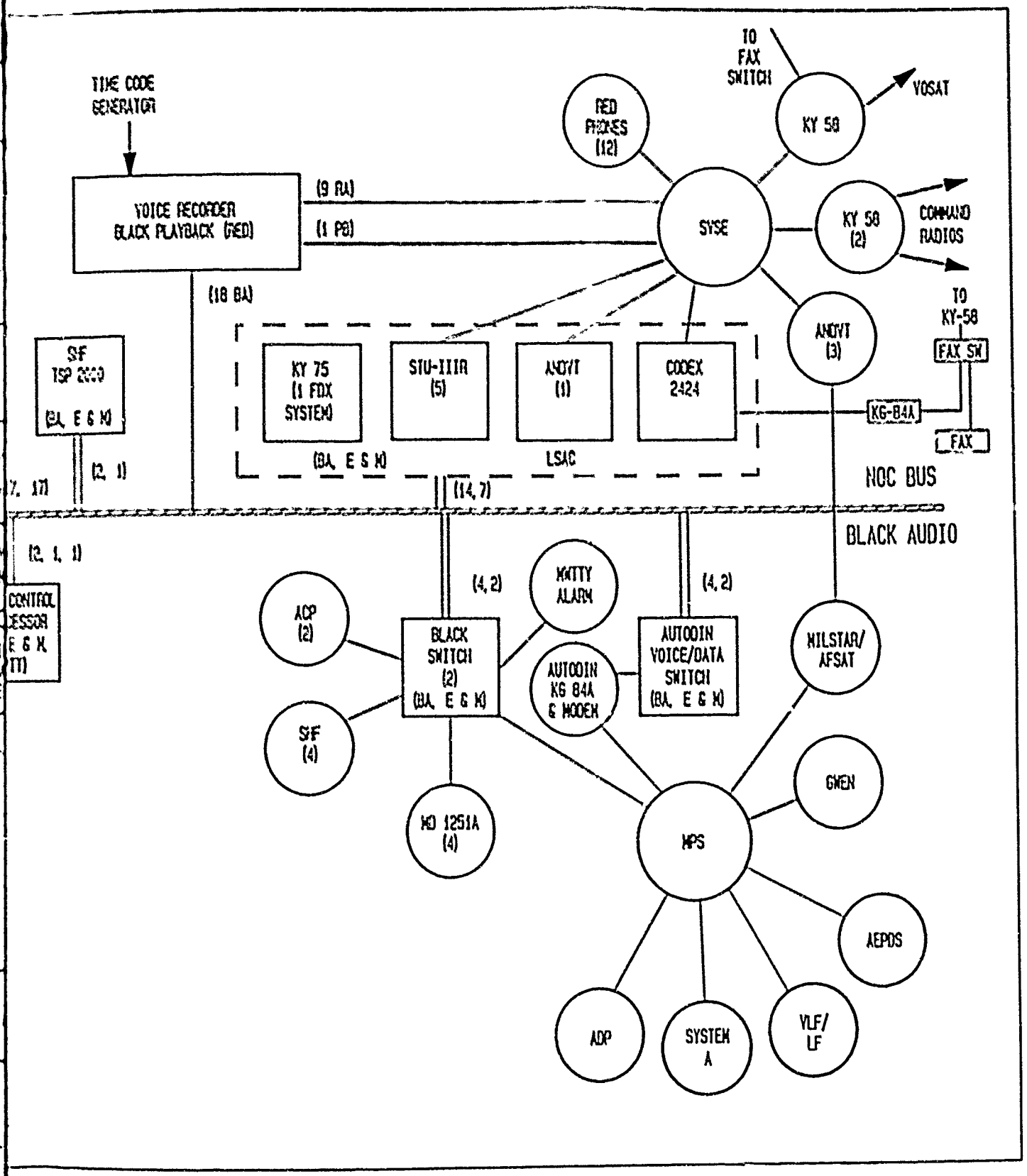

Figure 4–1. ATSS Functions on Bus

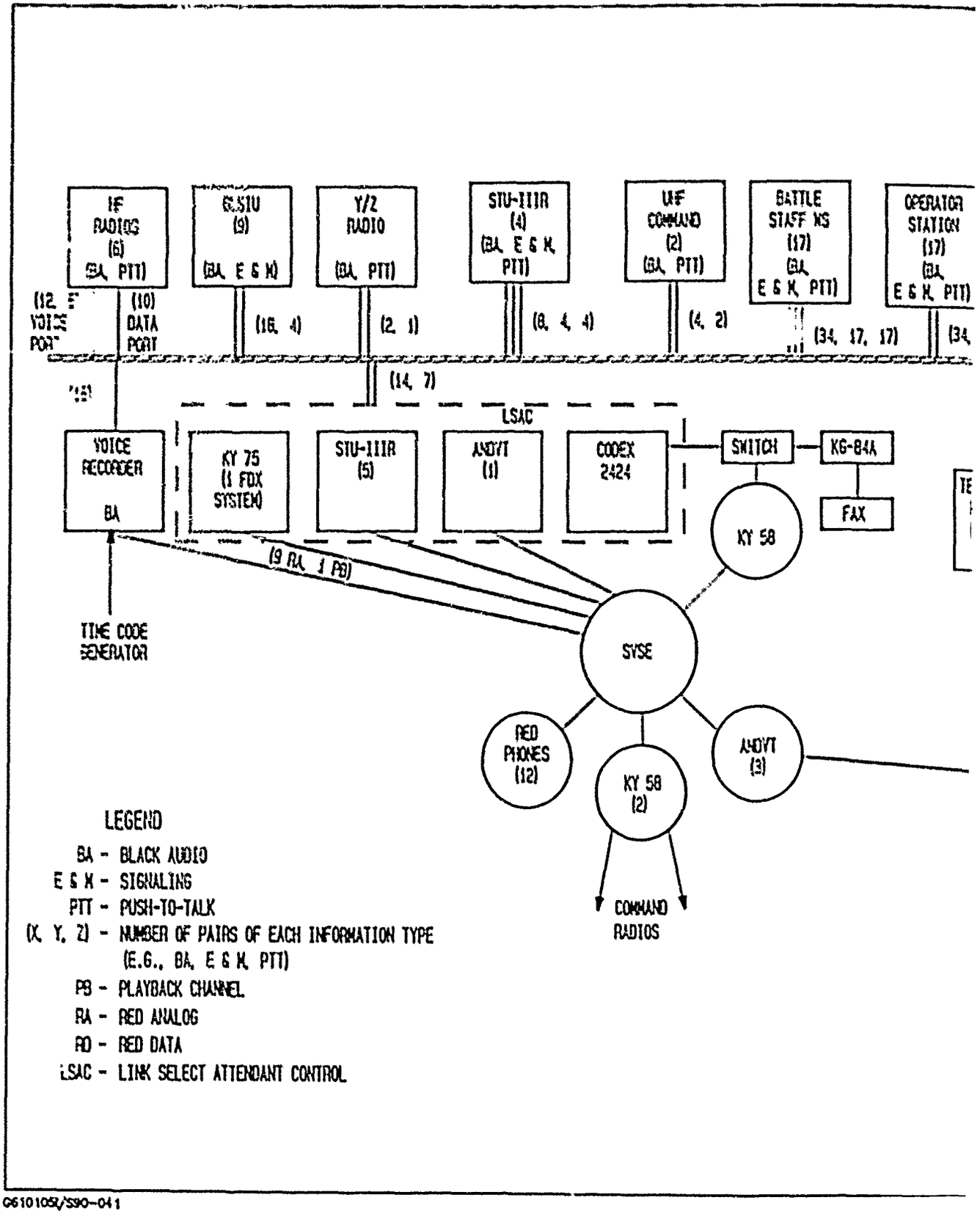

G610105L/S90-041

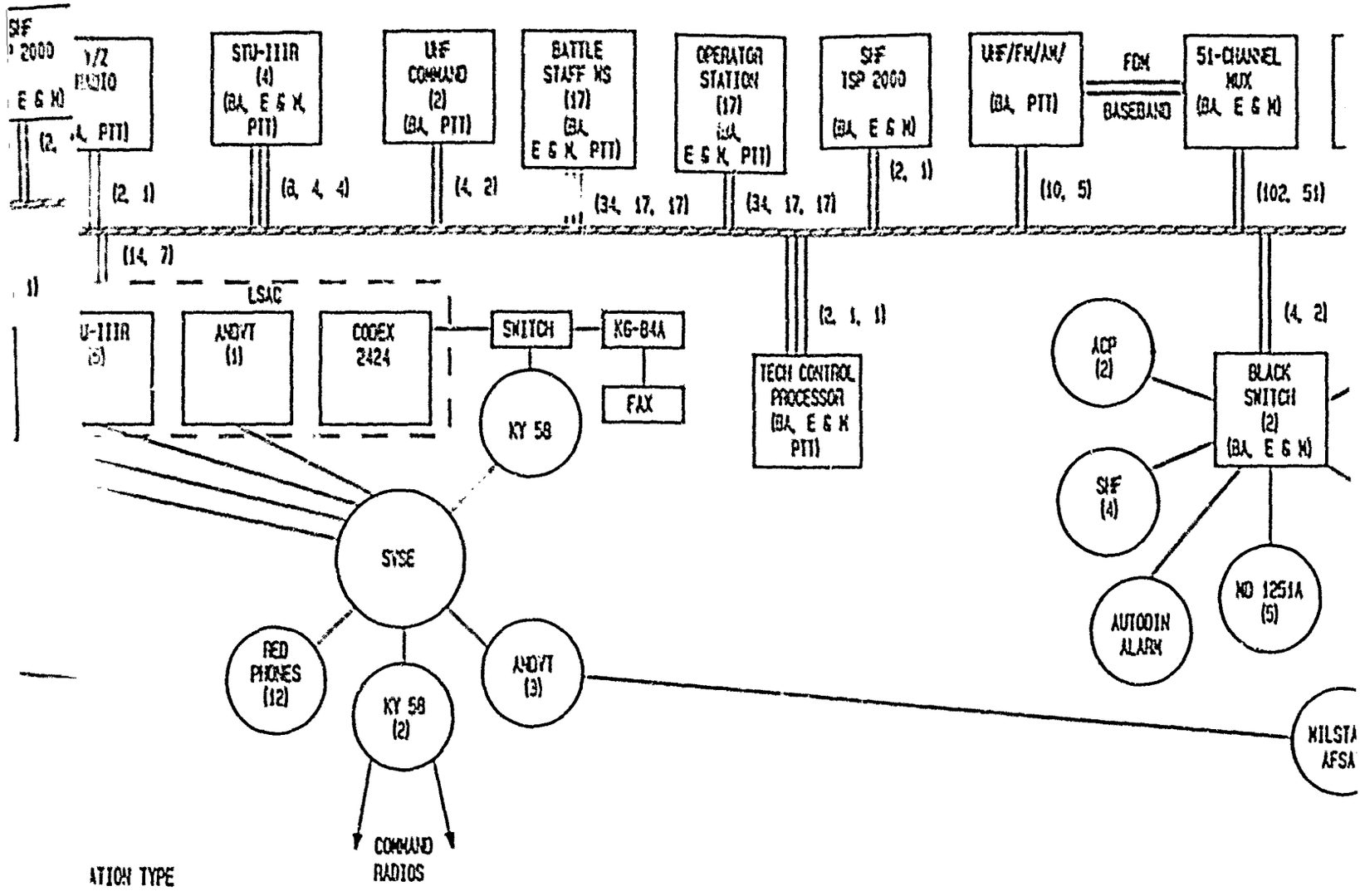
STU-IIIR (4) (BA, E & K, PTT)
UHF COMMAND (2) (BA, PTT)
BATTLE STAFF MS (17) (BA, E & K, PTT)
OPERATOR STATION (17) (BA, E & K, PTT)
SHF TSP 2000 (BA, E & K)
UHF/FM/AM/ (BA, PTT)
FDM
BASEBAND
51-CHANNEL MUX (BA, E & K)
(2, 1)
(8, 4, 4)
(4, 2)
(34, 17, 17)
(34, 17, 17)
(2, 1)
(10, 5)
(102, 51)
(14, 7)
LSAC
AN/VT (1)
CODEX 2424
SWITCH
KG-84A
FAX
KY 58
(2, 1, 1)
TECH CONTROL PROCESSOR (BA, E & K PTT)
(4, 2)
ACP (2)
BLACK SWITCH (2) (BA, E & K)
SHF (4)
AUTODIN ALARM
MD 1251A (5)
SYSE
RED PHONES (12)
KY 58 (2)
AN/VT (3)
COMMAND RADIOS
ATION TYPE

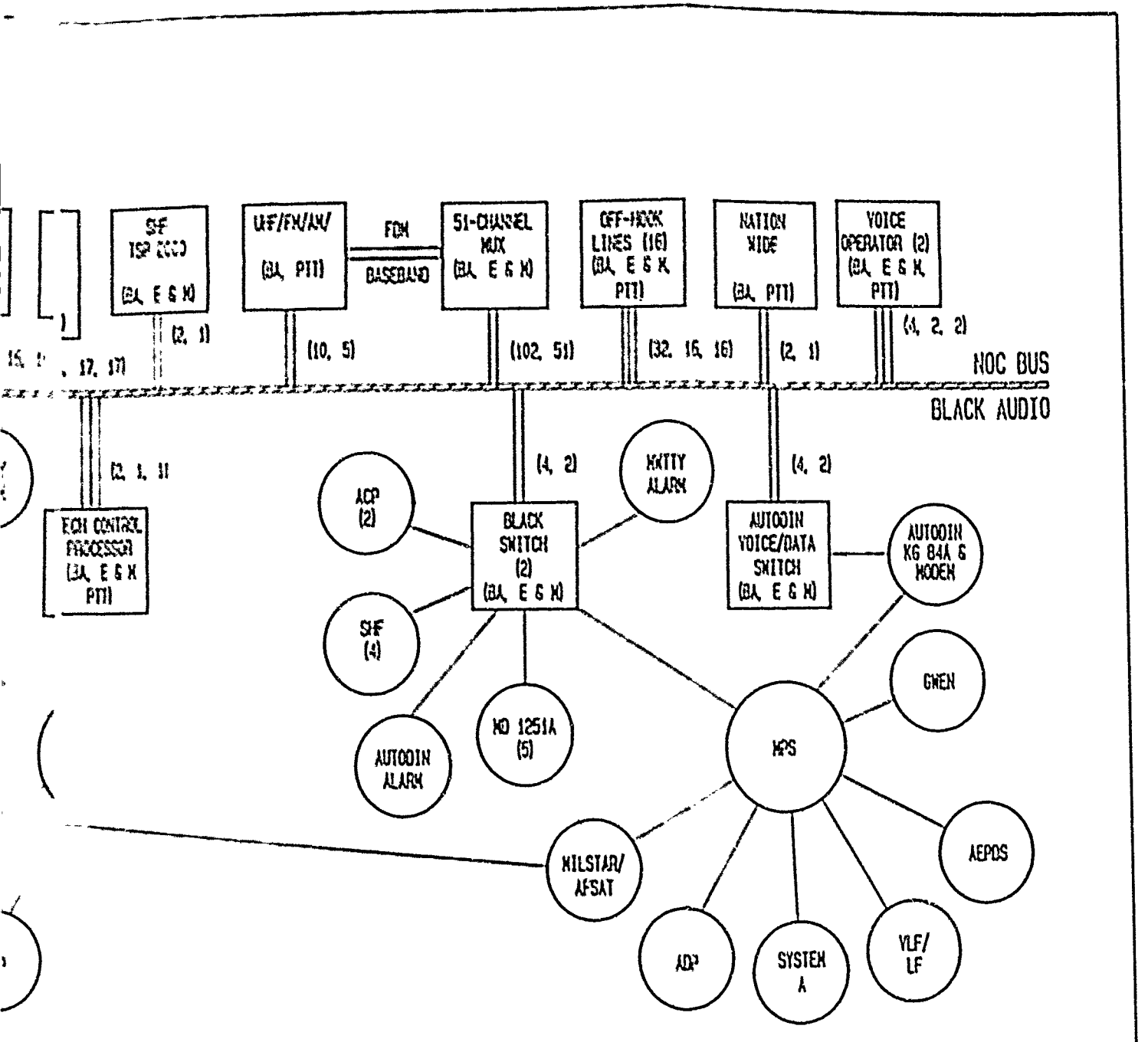

Figure 4–2. ATSS and MTSS Functions on Bus

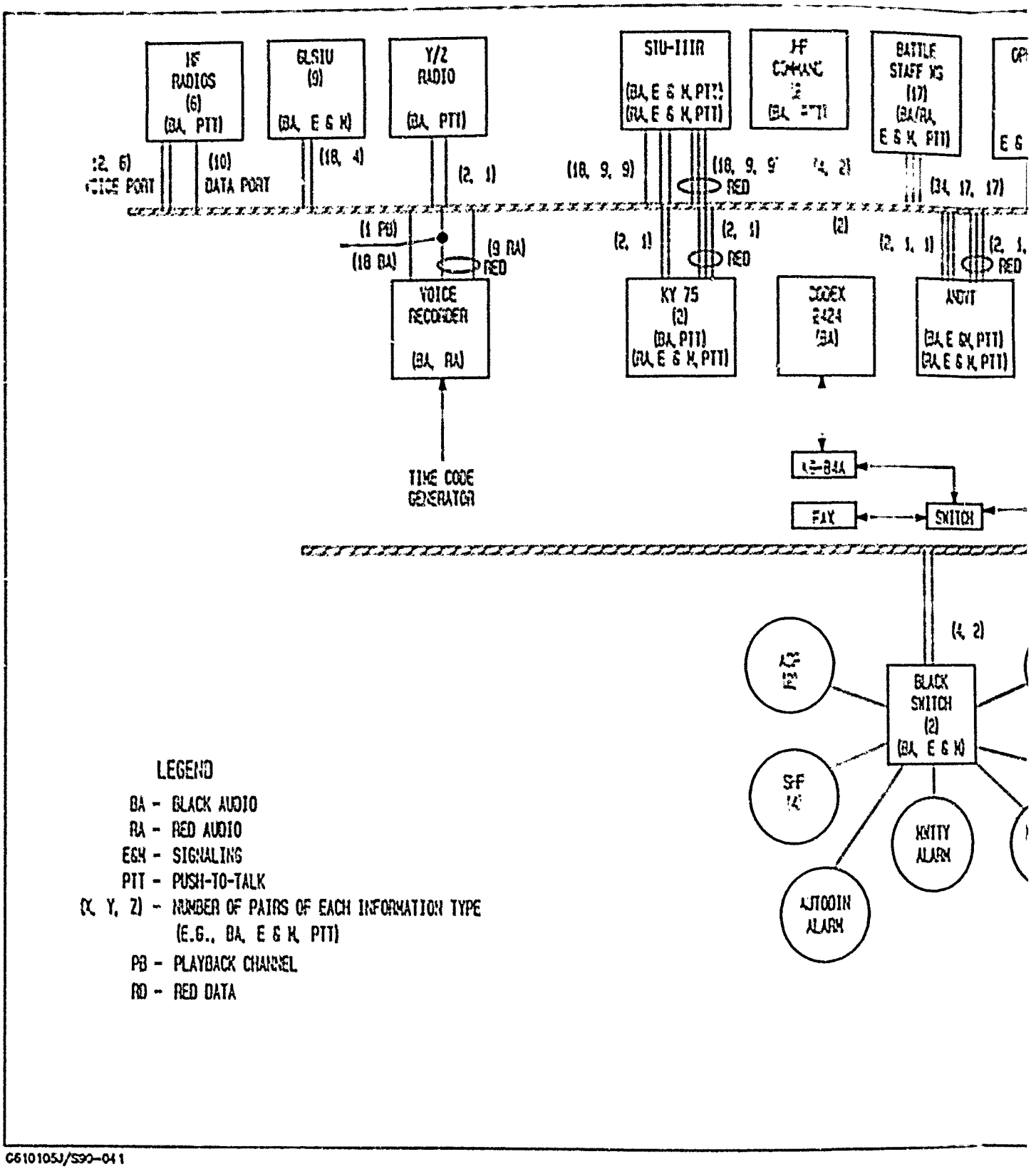

LEGEND

BA - BLACK AUDIO
RA - RED AUDIO
E&K - SIGNALING
PTT - PUSH-TO-TALK
(X, Y, Z) - NUMBER OF PAIRS OF EACH INFORMATION TYPE (E.G., BA, E & K, PTT)
PB - PLAYBACK CHANNEL
RD - RED DATA

C610105J/S90-041

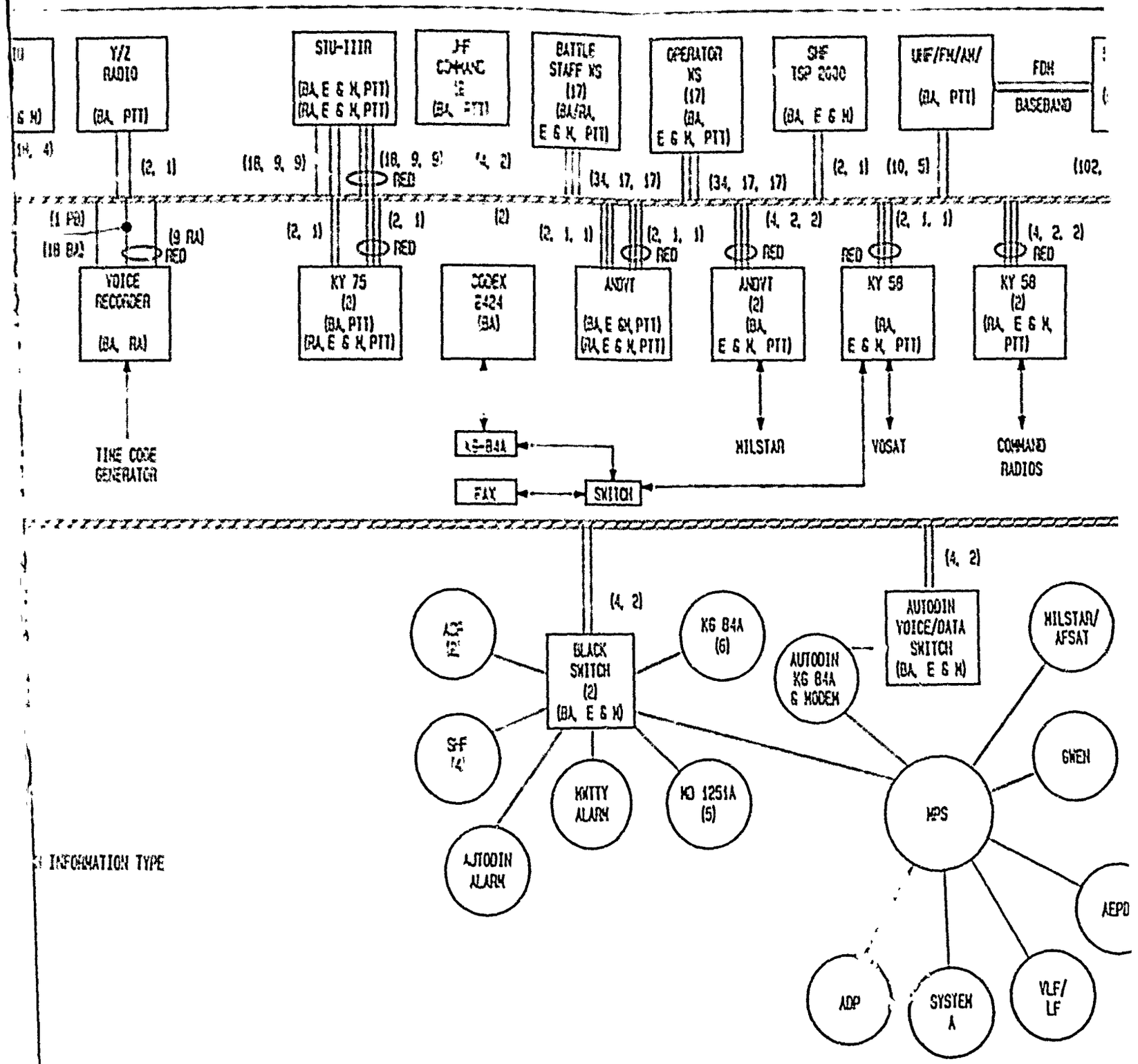
Y/Z RADIO (BA, PTT)
STU-IIIR (BA, E & K, PTT) (RA, E & K, PTT)
HF COMM (BA, PTT)
BATTLE STAFF XS (17) (BA/RA, E & K, PTT)
OPERATOR XS (17) (BA, E & K, PTT)
SHF TSP 2030 (BA, E & K)
UHF/FM/AM/ (BA, PTT)
FDM
BASEBAND
(2, 1)
(18, 9, 9)
(18, 9, 9) RED
(4, 2)
(34, 17, 17)
(34, 17, 17)
(2, 1)
(10, 5)
(102,
(1 PR)
(18 BA)
(9 RA) RED
(2, 1)
(2, 1) RED
(2)
(2, 1, 1)
(2, 1, 1) RED
(4, 2, 2)
RED
(2, 1, 1)
(4, 2, 2) RED
VOICE RECORDER (BA, RA)
KY 75 (2) (BA, PTT) (RA, E & K, PTT)
CODEX 2424 (BA)
ANDVT (BA, E &K, PTT) (RA, E & K, PTT)
ANDVT (2) (BA, E & K, PTT)
KY 58 (BA, E & K, PTT)
KY 58 (2) (RA, E & K, PTT)
TIME CODE GENERATOR
KG-84A
FAX
SWITCH
MILSTAR
VOSAT
COMMAND RADIOS
(4, 2)
(4, 2)
KG 84A (6)
AUTODIN KG 84A & MODEM
AUTODIN VOICE/DATA SWITCH (BA, E & K)
MILSTAR/ AFSAT
BLACK SWITCH (2) (BA, E & K)
SHF (4)
GWEN
KWITY ALARM
MD 1251A (5)
MPS
AUTODIN ALARM
AEPD
ADP
SYSTEM A
VLF/ LF
INFORMATION TYPE

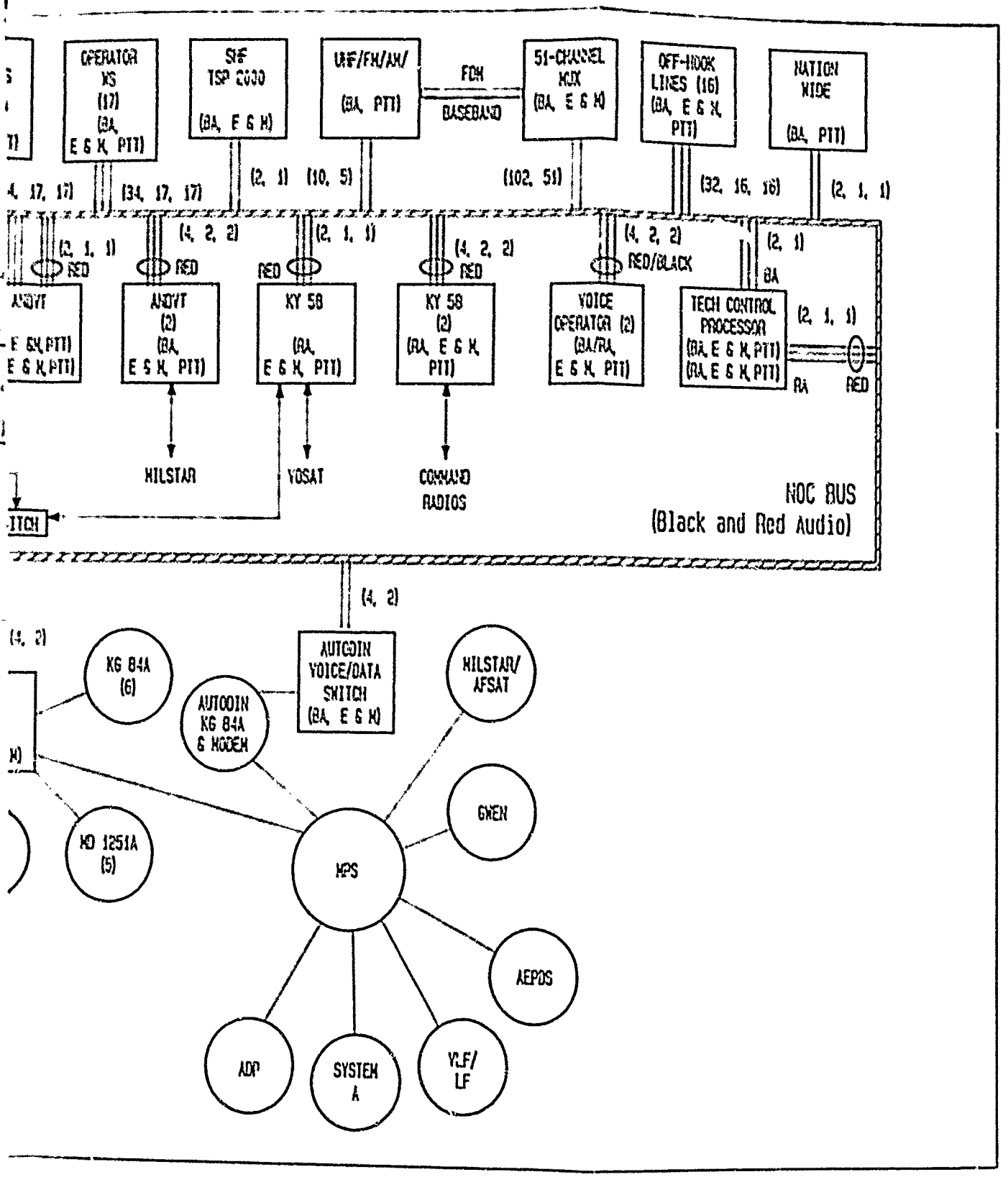

Figure 4–3. ATSS, MTSS, and SVSE Functions on Bus

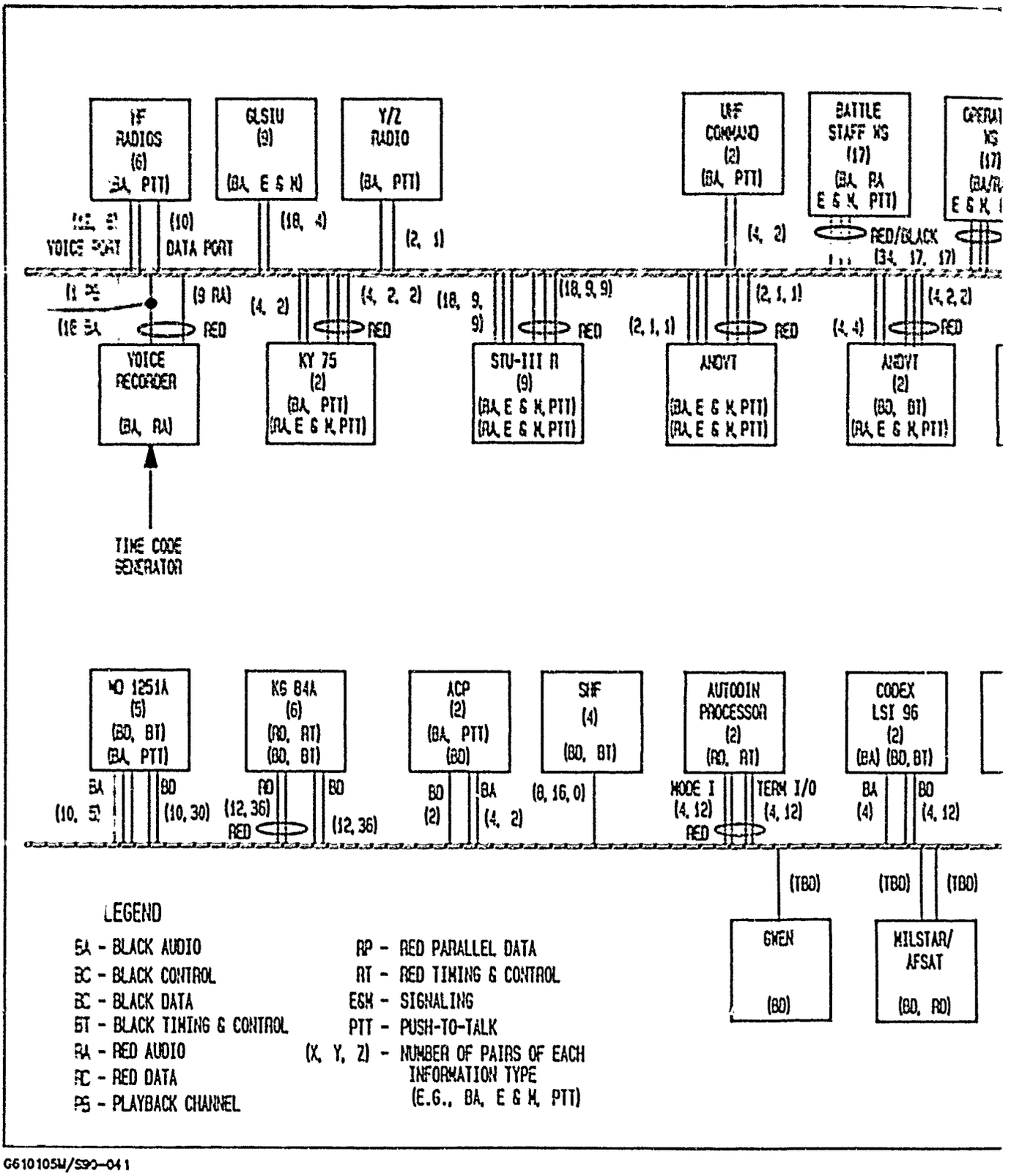

G610105M/S90-041

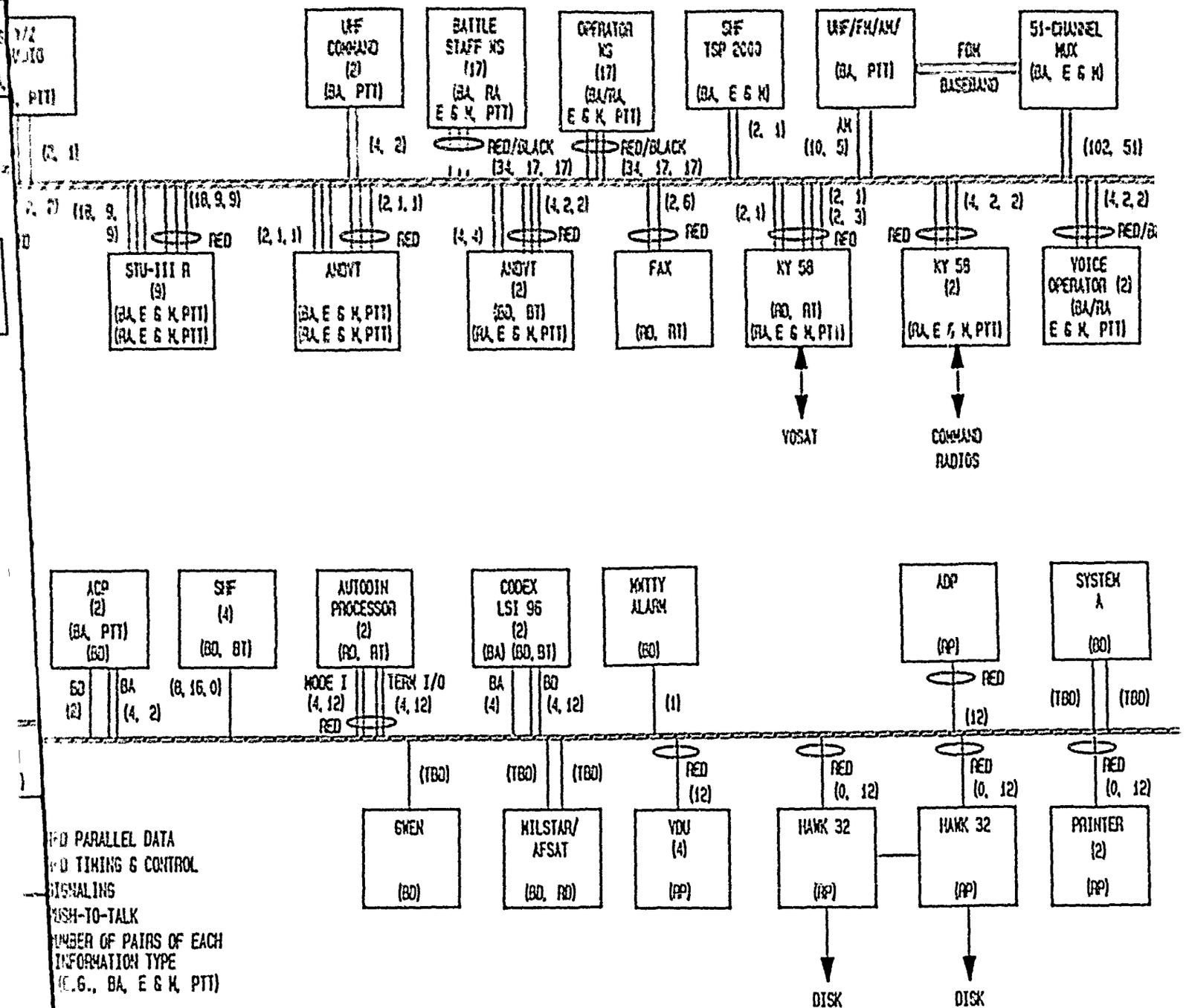
UHF COMMAND (2) (BA, PTI)
BATTLE STAFF NS (17) (BA, RA E G K, PTI)
OPERATOR NS (17) (BA/RA, E G K, PTI)
SIF TSP 2000 (BA, E G K)
UHF/FH/AH/ (BA, PTI)
FOM
BASEBAND
51-CHANNEL MUX (BA, E G K)
RED/BLACK (34, 17, 17)
RED/BLACK (34, 17, 17)
(4, 2)
(2, 1)
AH (10, 5)
(102, 51)
(18, 9, 9)
(2, 1, 1)
(4, 2, 2)
(2, 6)
(2, 1)
(2, 1) (2, 3)
(4, 2, 2)
(4, 2, 2)
RED
STU-III R (9) (BA, E G K, PTI) (RA, E G K, PTI)
AUDVT (BA, E G K, PTI) (RA, E G K, PTI)
AUDVT (2) (BA, E G K, PTI)
FAX (RO, RT)
KY 58 (RO, RT) (BA, E G K, PTI)
KY 58 (2) (RA, E G K, PTI)
VOICE OPERATOR (2) (BA/RA E G K, PTI)
VOSAT
COMMAND RADIOS
ACP (2) (BA, PTI) (BO)
SIF (4) (BO, BT)
AUTODIN PROCESSOR (2) (RO, RT)
CODEX LSI 96 (2) (BA) (BO, BT)
KATTY ALARM (BO)
ADP (PP)
SYSTEM X (BO)
BO (2)
BA (4, 2)
(8, 16, 0)
MODE I (4, 12)
TERM I/O (4, 12)
BA (4)
BO (4, 12)
(1)
RED (12)
(TBD)
(TBD)
RED (0, 12)
GKEN (BO)
MILSTAR/ AFSAT (BO, RO)
YDU (4) (PP)
HAWK 32 (PP)
HAWK 32 (PP)
PRINTER (2) (PP)
DISK
DISK
D PARALLEL DATA
D TIMING & CONTROL
SIGNALING
USH-TO-TALK
UMBER OF PAIRS OF EACH INFORMATION TYPE (E.G., BA, E G K, PTI)

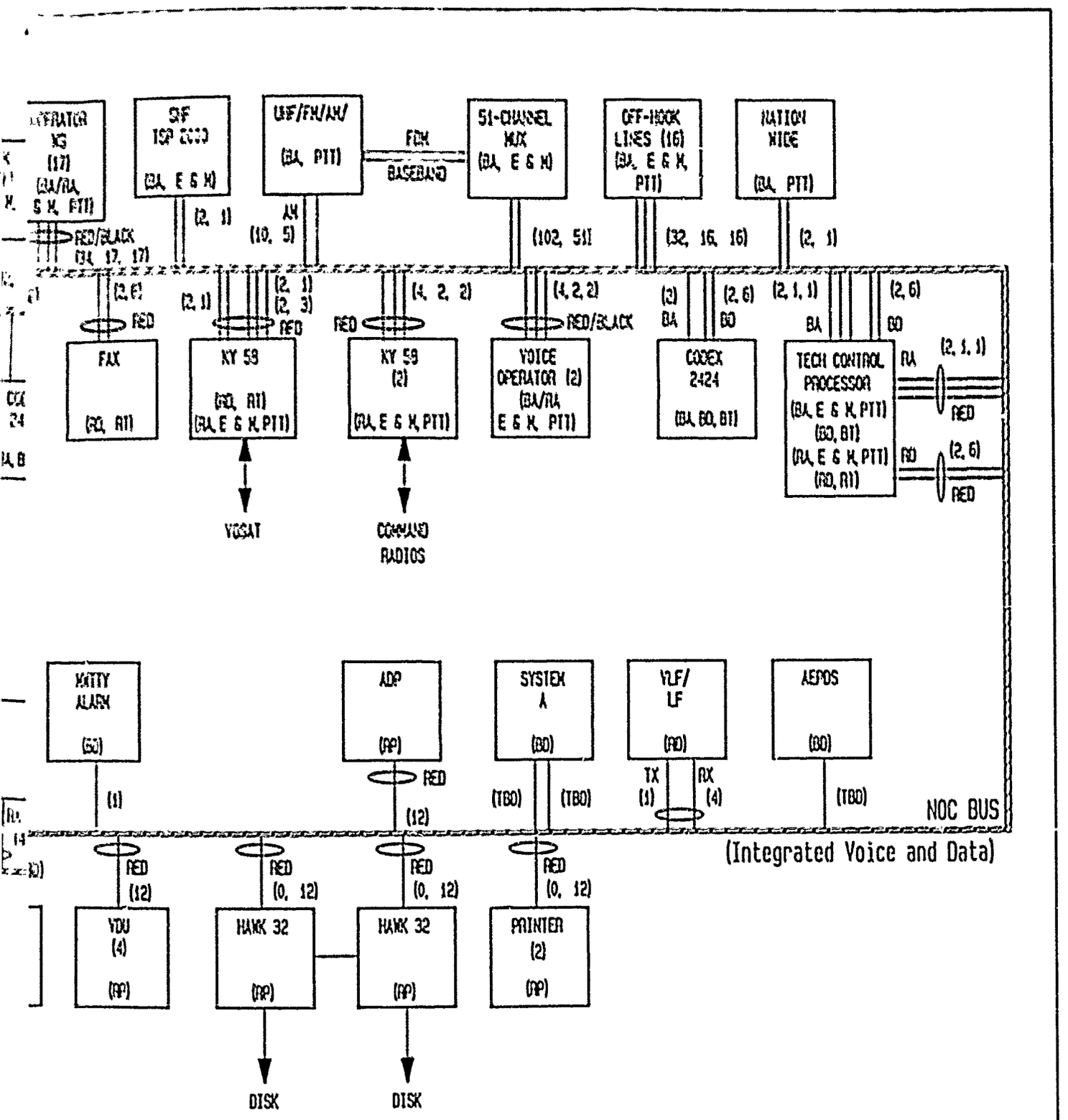

Figure 4–4. ATSS, MTSS, SVSE, and MPS Functions on Bus

integrated voice and data network. Lastly, the additional video capability means that television will compete with voice and data for available bandwidth. The net effect of installing these alternatives piecemeal or at one time will impact initial funding. However, the full capability of a shared media will not be realized unless all information systems (voice, data, and video), switching functions, and network management are integrated on the bus.

4.3 Transmission Media

Four types of transmission media were analyzed for use on the NOCN bus: optical fiber cable, coaxial cable, twisted-pair wire, and wireless. With the exception of the wireless transmission, the transmission media are currently used in various applications on military aircraft. Sections 4.3.1 through 4.3.4 analyze the alternative transmission media, and section 4.3.5 compares them.

4.3.1 Optical Fiber Cable. Optical fiber cables have superior characteristics in the areas of EMI/RFI susceptibility, EMP effects, space and weight requirements, and capacity. Repair of optical fiber cable is more difficult in the areas of connecting and splicing, but field maintenance tools are available for reliable low-cost repairs.

4.3.2 Coaxial Cable. Coaxial cables are characterized by moderate performance with susceptibility to both EMI/RFI and EMP effects. The higher weight and cost of coaxial cable for broadband implementation is due to the frequency translation modems and head-end electronics that are sometimes needed for this type of network.

4.3.3 Twisted-Wire Pair. Twisted-wire pair is typically used in low-speed transmission, although transmission rates up to a few megabits can be achieved. Unshielded twisted pair is very susceptible to EMI/RFI and EMP. Relatively low in cost, twisted-wire pair is easy to install and repair.

4.3.4 Wireless. Wireless technology represents an attractive means for elimination of physical connections between aircraft compartments. However, this technology has two major shortcomings. First, low bandwidth capacity is available using radio frequency (RF) connectivity. Typical data rates range from tens of kilobits to a few megabits. The second shortcoming is that an RF-based network could not successfully operate on the E-4B without the use of costly spread-spectrum techniques to overcome multipath propagation effects expected inside the aircraft.

4.3.5 Comparison of Transmission Media. Each of the transmission media differs considerably in its capabilities to meet the NOCN requirements. The optical fiber cable exhibits the best across-the-board characteristics for the NOCN and its relative costs are comparable to other choices. While meeting the overall NOCN requirements, broadband coaxial cable falls below optical fiber in noise interference and nuclear effects susceptibility and it weighs more. Twisted-wire pair rates lowest in cost but bandwidth limitations, noise interference, and nuclear effects susceptibility severely limit performance in a wideband environment. Lastly, the wireless technology represents a high risk choice since high development costs are anticipated to fully develop this capability in an airborne environment.

4.4 Network Protocols

Several network protocols using recognized standards were considered during this study: Institute of Electrical and Electronics Engineers (IEEE) standards 802.3, 802.4, 802.5, and American National Standards Institute (ANSI) fiber distribution data interface (FDDI) standard. Each of the IEEE 802 standards defines several options for media and data. FDDI (ANSI standard X3T9.5) is a high-speed backbone network for high data rate traffic and interconnection of other networks. These network protocols are addressed and compared.

4.4.1 IEEE 802.3 CSMA/CD. IEEE 802.3 is distinguished by its use of a linear (bus) topology and a carrier sense multiple access with collision detection (CSMA/CD) access protocol. This commonly used standard evolved from the Ethernet local network developed by Xerox. Media access occurs on a first-come basis except in the case of a data collision, which sets up random access times for new bus entry. Local area networks operating under this standard typically use a 50-ohm coaxial baseband cable that can send data at 10 Mbps. Under heavy loads the throughput may be a fraction of the total capacity due to overhead constraints and excessive collisions and the resulting need for many packet retransmissions.

4.4.2 IEEE 802.4 Token Bus. This standard uses a bus topology with token-passing for media access. A control packet known as the token regulates the right of access, which determines the order in which stations access the bus. The token bus network handles data traffic up to 10 Mbps over a 75-ohm coaxial cable. This type of network can operate efficiently near its maximum capacity and is desirable if it is absolutely necessary that there be no data collisions.

4.4.3 IEEE 802.5 Token Ring. Access to a token ring network is also controlled deterministically by token passing. Information is transmitted at 4 or 16 Mbps from station-to-station for message acceptance. Since each station acts as a repeater, longer transmission distances are available compared to the token bus.

4.4.4 ANSI X3T9.5 FDDI. The currently approved FDDI standard supports data transmission at 100 Mbps on fiber optic cable. A follow-on FDDI-II standard is planned to incorporate voice traffic on the network via assigned periodic time slots. When the FDDI-II standard is approved, it will be the only network protocol standard planned to support voice, data, and compressed video at a capacity required for NOCN.

4.4.5 Comparison of Network Protocols. The IEEE 802 standards support information services for transmission capacity and types of traffic which are inadequate for the NOCN bus. Only the FDDI standards will meet the NEACP digital data, voice, and video requirements.

SECTION 5. RECOMMENDED CONCEPT

The recommended concept based on the tradeoff studies described in section 4, include the following:

- All control, voice, and data information between NEACP compartments should be carried over optical fiber cabling using the FDDI or FDDI-II concept.

- Commercial television should not be distributed over an FDDI-type LAN, but could be distributed in 6 MHz analog form over optical fiber cable.

- Either the VME or the node processor bus interface concept would be suitable for the NEACP.

- The Navy's SAFENET-II appears to be a good example to follow in developing NOCN design details.

This section discusses the FDDI recommended technology, the architecture that uses FDDI, and an example of FDDI implementation, which will manage the NEACP switching, connectivity, and information-processing needs.

5.1 FDDI Standard

The FDDI standard encompasses several protocols for 100 Mbps data services over fiber optics: Physical Media Dependent (PMD), Physical Layer Protocol (PHY), Media Access Control (MAC), Station Management (SMT), and a sublayer called the Hybrid Ring Control (HRC). The PMD and PHY documentation in the standard constitute the physical layer protocols. The PMD specifies optical transceivers, connectors, and

media characteristics. The PHY specifies data coding, decoding, and clocking. The MAC specifies the frame structure, its content, and defines token passing for the ring. The PMD, PHY, and MAC portions of the standard have been accepted and products that incorporate these standards are rapidly becoming available. The SMT is currently being reviewed and is discussed in subsection 5.1.1. The HRC sublayer occurs between the PHY and MAC protocols and converts FDDI into FDDI-II. This version of the standard incorporates "circuit-switched" traffic (voice) and other types of real-time traffic via isochronous channels. The HRC protocol is being voted on by the American National Standards Institute (ANSI) standards committee and approval is expected in late 1990.

One of the dynamic features in FDDI, not found in other LAN standards, is the combination of dual-ring reliability and fault-tolerant routing. If a single station fails in FDDI, it can be bypassed through the use of an optical bypass switch. If a cable or catastrophic failure at a node occurs, a loopback ring is formed using the second ring.

Several standard interfaces for FDDI are currently available. These interfaces include ring concentrators to attach several users to a single node and interfaces to IEEE 802.3 LANS, the VME bus, and Electrical Industries Association (EIA) RS-232-C/MIL-STD-188C devices.

5.1.1 FDDI SMT. The FDDI SMT standard is currently being reviewed prior to acceptance. Station management will incorporate many features concerning the management, operation, and maintenance of the network. This part of the standard defines connection management which includes inserting stations on the network, initializing the station, and, when necessary, removing it. SMT also defines configuration management which includes partitioning, communications protocols for transmitting configuration information, fault isolation, and recovery. SMT also specifies scheduling policies for the network, collection of station statistics, address administration link testing, and other housekeeping-type functions.

5.1.2 NOCN Station Management and NEACP Technical Control. As networks become larger and more complex, the need for network management increases. As the FDDI SMT standard matures, an increasing number of COTS items will become available for implementing network management.

If the NOCN design incorporates a good network management protocol, such as FDDI SMT, certain technical control hardware may be eliminated from the NEACP. For example, the link test and fault isolation functions implemented by the FDDI SMT may make some of the technical control patch and test panels unnecessary, resulting in weight and space savings. A technical control study will identify preliminary alternatives for technical control hardware elimination.

5.2 Bus Interface Assemblies

5.2.1 Versa-Module Europe Interface Assembly. The Versa-Module Europe (VME) interface assembly is an example of how the recommended technology could fit into the bus concepts introduced in section 2.4. The FDDI network is used as a backbone network that connects to various ME via the interface assembly. The assembly contains a backplane (VME) chassis and a network connection, and may sometimes contain ME, if it is designed as a VME-compatible card. This assembly is depicted in figure 5-1.

The ME is comprised of components with different connectivity requirements. The ME 1 interfaces to the BI via an EIA RS-232-C physical connection. The ME 2 requires two connections to the BI -- EIA RS-232-C and IEEE 488. The ME 3 also requires an IEEE 488 interface. The ME 4 interface requires the transmission of analog data and control signals. Other MEs interface via appropriate VME-compatible cards as illustrated by the ME card slot in figure 5-1. Also included in this figure are central processing units (CPUs), a hard disk, and power supply needed for each VME interface assembly.

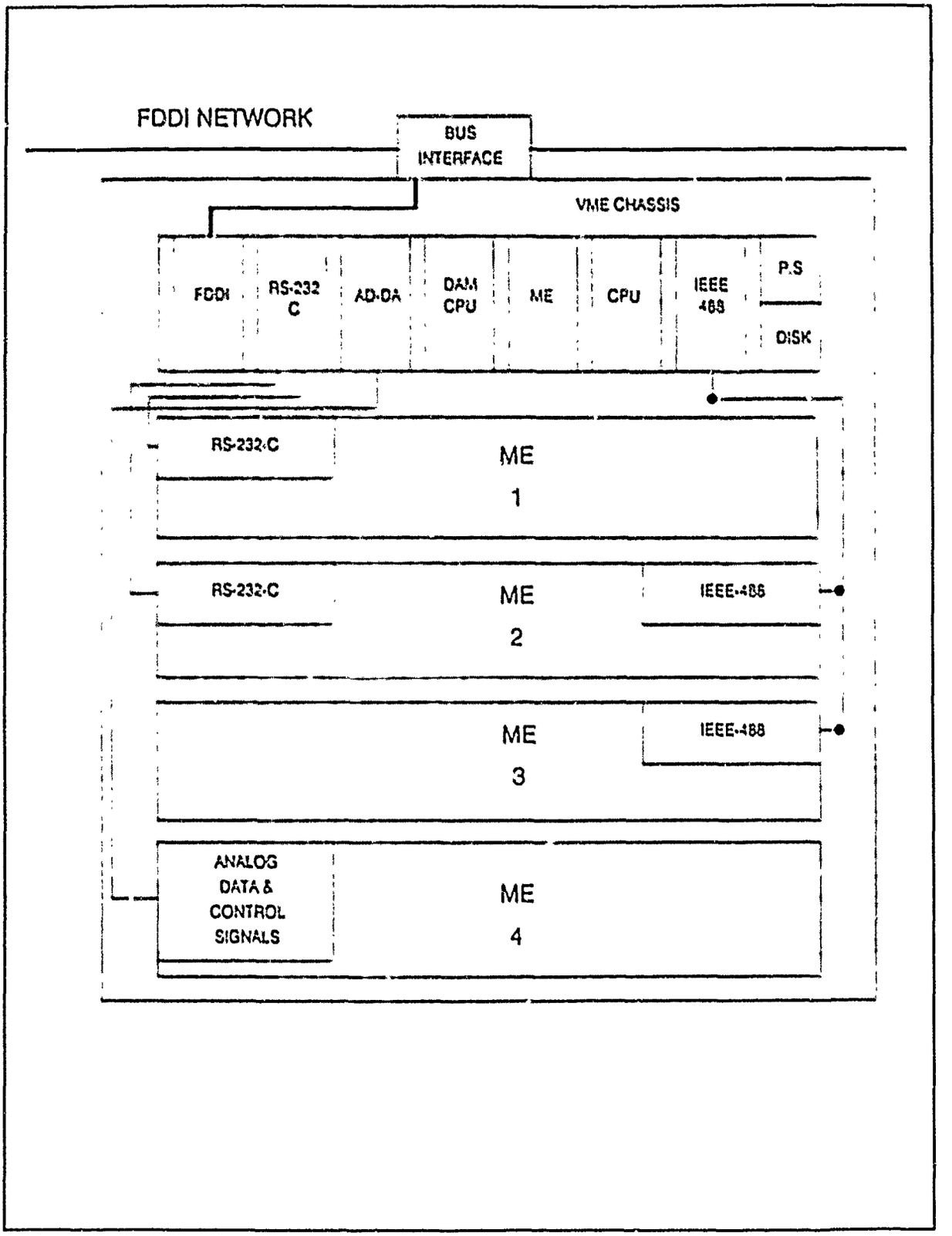

Figure 5-1. Example VME Interface Assembly

The backplane chassis allows multiple numbers of components to interface to the backbone network via specific interface cards plugged into the common backplane. The VME bus is an attractive candidate to be the common backplane. The VME backplane bus is a high performance system that supports 8-, 16-, and 32-bit data transfer over a 32-bit data and address path. The VME bus is the most popular and widely supported backplane bus, with a wide variety of available COTS hardware and software (reference 5). Typical COTS plug-in cards include analog-to-digital (A/D) and digital-to-analog (D/A) converters, IEEE 488 interfaces, and EIA RS-232-C interfaces. Some mission equipment may be VME compatible cards. A VME card could also be a device adapter module (DAM) to meet the interface requirements of the ME. A DAM provides the special interface capability for those devices for which no standard interface exists.

An interface card exists on the VME backplane to multiplex the signals for a single BI connection. The connection shown in figure 5-1 is an example of an FDDI-type network interface. A VME interface for an FDDI network is available.

5.2.2 Node Processor Interface Assembly. In addition to the VME interface unit assembly, the node processor interface assembly illustrates how the recommended technology could fit into the bus concepts previously depicted in figure 2-4. The ME node processor assembly contains interface cards within the ME and a network connection. This assembly, ideal for new ME, is depicted in figure 5-2.

As previously stated, the ME is made up of components with different connectivity requirements. For the ME node processor assembly, only these interface cards appropriate for that particular piece of ME are required. For this example, the ME makes an EIA RS-232-C conversion to FDDI internally and then interfaces to the BI.

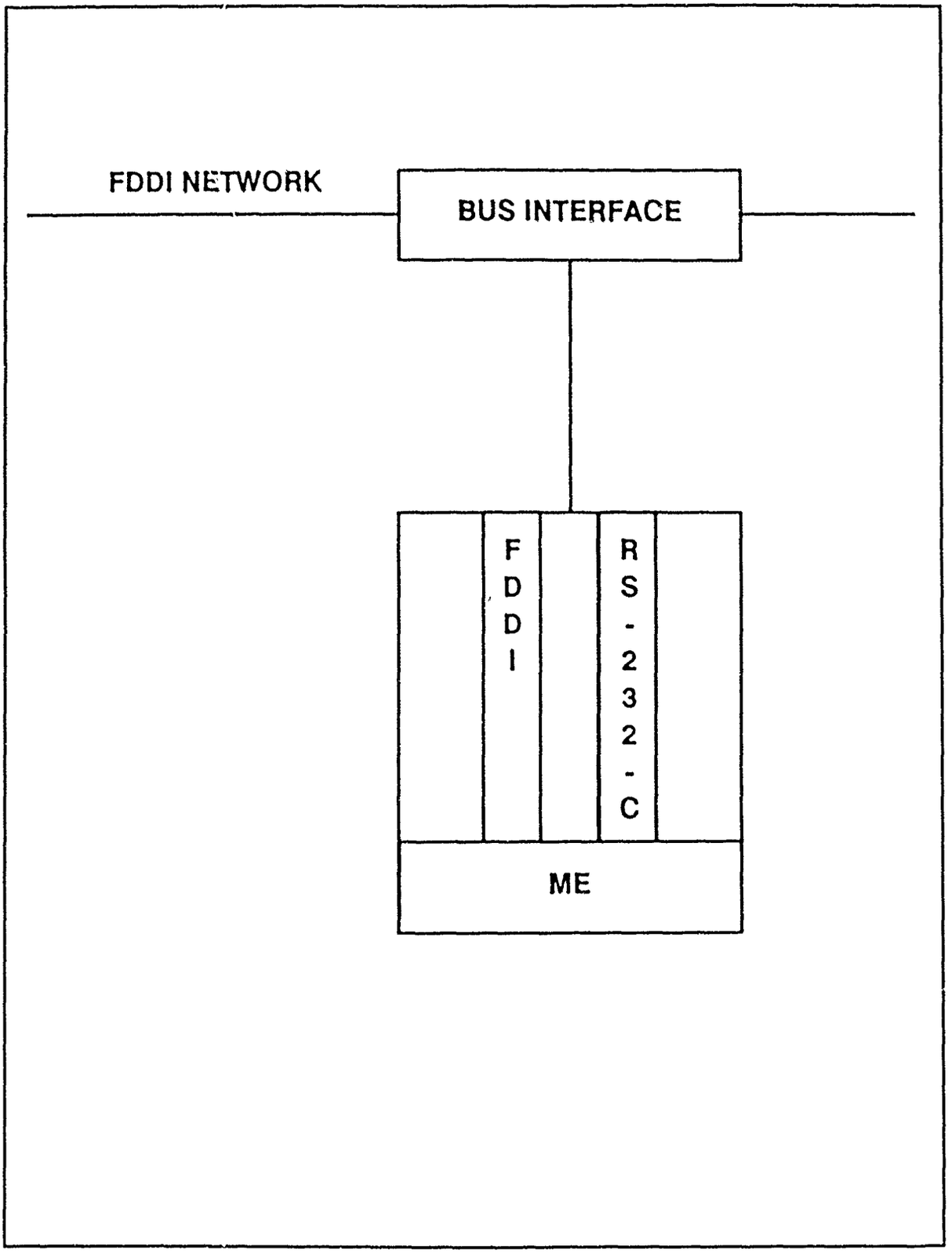

Figure 5-2. Example Node Processor Interface Assembly

A BI (i.e., FDDI ring concentrator) is available to link many pieces of ME to the FDDI network. Other FDDI BIs (i.e., EIA RS-232-C, VME) are also available.

5.3 SAFENET II - A LAN Standard Using FDDI

FDDI applies to only the bottom two layers of the LAN technology needed to implement the NOCN. The remaining layers need to be developed. An example of an implementation of all seven layers, based on FDDI and fiber optics, is the Navy's SAFENET-II.

The Navy has been aggressively pursuing the use of local area network technology to integrate a wide variety of Navy tactical communications systems. In 1986, Naval Ocean Systems Center (NOSC) organized the Survivable Adaptable Fiber-Optic Embedded Network (SAFENET) Committee as a result of its experience in the Airborne Electronic Ground and Information System (AEGIS) program. The committee consisted of industry and government volunteers who were tasked with developing tactical communications standards, with an emphasis on satisfying requirements using industry standards. The Navy would develop its own standards only if industry standards were inadequate (reference 6).

The SAFENET committee chose fiber-optic local area networks as the solution to the Navy's integration requirements and created two working groups called SAFENET I and SAFENET II. SAFENET I was based on industry standards for which hardware was available. The SAFENET committee chose a modified IEEE 802.5 (token ring) protocol as the basis for SAFENET I. Selection was based on a fault tolerant design, deterministic access under high data loads, and expected operation in a combat environment without performance degradation. SAFENET II was not constrained by current hardware availability, and bases its physical layer on the FDDI standard. Fiber optics was chosen for SAFENET due to its advantages of

higher bandwidth, electromagnetic interference (EMI) immunity and low weight.

The Navy, like the NEACP community, recognized the need for a bus technology to achieve integration and onboard connectivity for its fixed and mobile platforms. One of the Navy's solutions, SAFENET II, is a military standard local area network that uses FDDI for open systems interconnection (OSI) protocol layers 1 and 2. If the use of FDDI technology on the NEACP is pursued further, the SAFENET program can provide valuable insight to the process of implementing COTS technology to meet military requirements. Also, hardware and software developed under SAFENET may be suitable for use on the NEACP.

5.3.1 Status of SAFENET II. SAFENET II provides useful information for the NOC study since SAFENET II incorporates the FDDI standard for use in military systems.

Martin-Marietta Aero and Naval Systems Division is developing a SAFENET II-based communications system. It has a beta site agreement with Advanced Micro Devices (AMD) for its SUPERNET chipset implementation of FDDI. A beta site agreement is an agreement between a developer and a user. The developer designs and fabricates a product to be used and tested in a prototype system prior to extensive release of the product. One result of this agreement has been the development of the first VME-based FDDI interface. It is available in card form as an embedded interface and is also used in the VME-based stand-alone SAFENET II network station. Other VME interfaces expected to be available this year are the Navy Tactical Data System (NTDS), MIL-STD-188C, MIL-STD-1553B, EIA RS-232-C, and Ethernet (i.e., IEEE 802.3).

SECTION 6. COST ANALYSIS OF THE NOCN

The section is divided into two portions. First, estimated NOCN costs are shown for the node processor and VME bus interface technologies. Second, a NOCN cost analysis is provided. A methodology framework is used to analyze the sources of ME system cost savings with the NOCN in place, additional benefits of the NOCN, and the relationship of NOCN costs as future ME systems are integrated. This methodology framework outlines the steps necessary to estimate the breakeven point of the NOCN over a 10 year timeframe, during which the network will pay for itself through cost offsets.

6.1 Estimated Costs of Recommended Bus Interface Technologies

The major NOCN cost elements for the node processor and VME technologies are both non-recurring and recurring costs. The following costs are non-recurring: up-front engineering, hardware, and integration. The up-front engineering costs include costs of determining the interconnection of components, deciding how the network equipment will be arranged, and selecting the appropriate location of the BIs so the ME can properly interface to the backbone network. Hardware cost is the cost of the NOCN equipment to be integrated on the NEACP. The recommended technologies describe the configuration of BIs connected to the backbone FDDI network. The cost of these BIs can be estimated from current component list prices and assumptions made about relative cost changes to coincide with a mid-199[illegible] timeframe. Integration costs include all those associated with integrating the NOCN on the NEACP. Documentation is required to ensure maintainability of the network. Labor is required to remove unnecessary connections and wiring, integrate the fiber-optic cables and interfaces, and connect ME to the interface nodes. Facility costs are incurred based on a daily rate while maintaining the NEACP in an integration facility. Testing is needed to ensure proper operations of the NOCN.

Recurring costs include operations and maintenance (O&M) and integrated logistics support (ILS) costs which include training personnel and maintaining a spares inventory for timely maintenance.

For both BI technologies, non-recurring and recurring costs are incorporated. The up-front engineering integration costs and recurring costs are assumed to be the same for both technologies. Since DCA and the Air Force will be accomplishing up-front engineering for a prototype network, the estimated production cost for this portion is negligible. The integration cost range from $0.2 to $1.0 million was chosen as reasonable. O&M ILS costs are assumed to remain unchanged from the pre-NOCN configuration.

The hardware cost range from $0.6 to $1.1 million for the VME BI technology was estimated by MITRE (Appendix A). Incorporating all non-recurring and recurring costs, the total network cost estimate using this technology ranges from $0.8 to $2.1 million per airplane.

The hardware cost range from $0.4 to $0.8 million for the node processor technology was extrapolated from an estimate by PTC (Appendix B). Incorporating all non-recurring and recurring costs, the total network cost estimate using this technology ranges from $0.6 to $1.8 million per airplane.

6.2 Cost Analysis

This section describes the costs and benefits that should be considered when determining the feasibility of the NOCN. A methodology is used to analyze and determine the NOCN cost estimate. The cost items necessary to perform a detailed cost analysis are described and, where estimates are available, these costs are shown. The cost items identified are estimated for the mid-1990s.

Additional benefits that cannot easily be quantified for analysis are discussed. These items are improved capabilities and functionality that the NOCN provides, and they may eventually provide cost savings.

A framework is presented to show how a cost breakeven point can be determined and what additional savings can be achieved by the NOCN over a 10-year timeframe.

6.2.1 Methodology Framework. A methodology framework, shown in figure 6-1, outlines the steps necessary to determine the cost breakeven point of the NOCN, where the network will pay for itself.

The costs associated with up-front engineering, procuring, integrating, and maintaining the NOCN are estimated. These estimates determine the cost of the NOCN.

Future ME system integration costs are the cost items associated with adding systems or upgrading capabilities. The only costs considered are those incurred as a result of integrating the equipment on the airborne platform (i.e., ME costs are omitted because they are not impacted by the existence/nonexistence of the NOCN). Each system integration will be easier with the NOCN because the system connectivity will already be in place, requiring just a network interface. It is assumed that the cost savings will be a percentage of the total system integration costs. Future integration of C3 systems over a 10-year life cycle are considered for realizing a cost savings.

Additional benefits are defined as those attributes of the network that enhance performance but may be difficult to measure. The benefits must be considered as "value-added" items that enhance the mission effectiveness of the system.

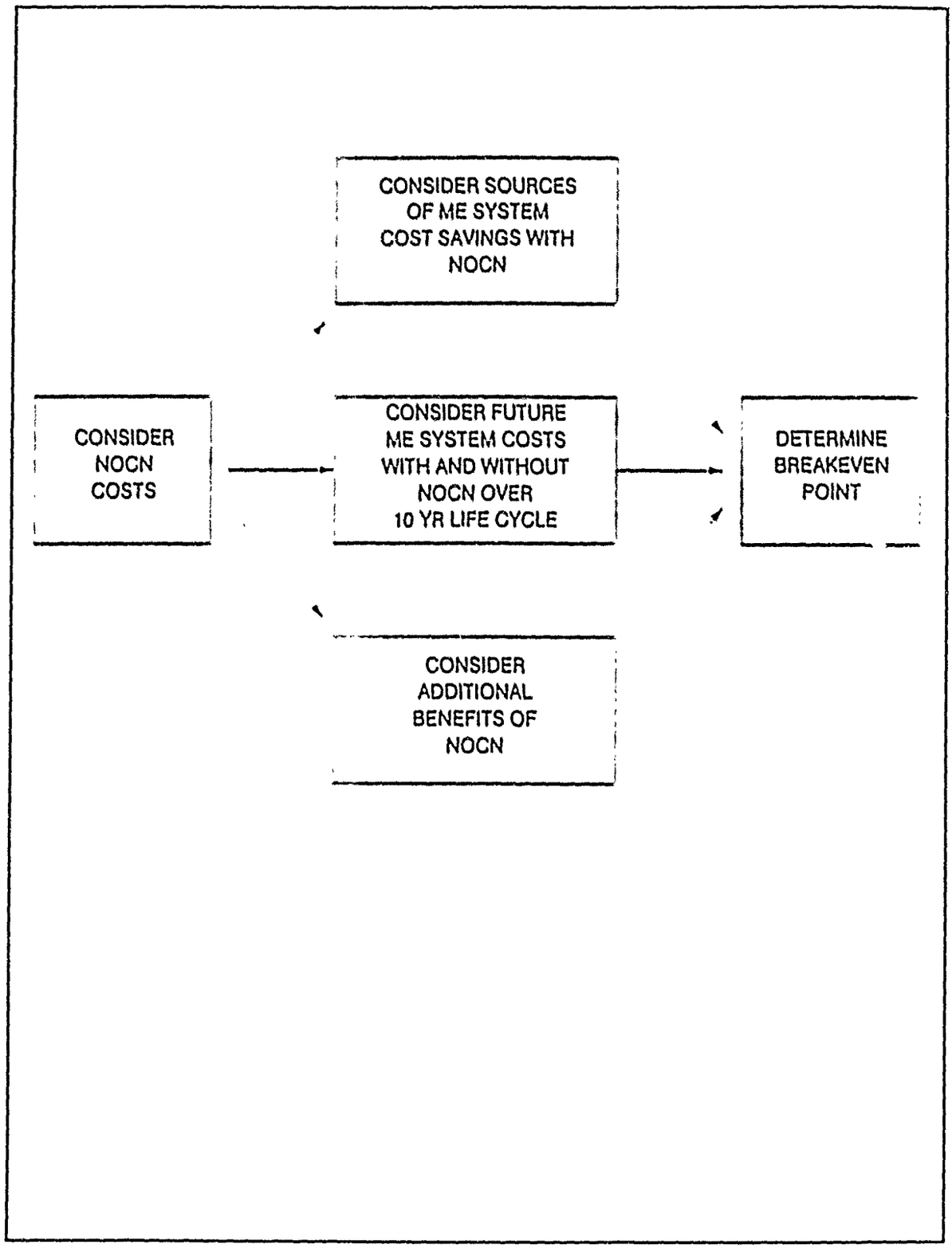

Figure 6-1. Methodology Framework

The feasibility of the NOCN is based on the point at which the accumulated savings exceed the cost of the network. A greater network cost will require more system integrations to be undertaken to accumulate the cost savings to pay for the network. The point at which the cost of the network equals the accumulated savings is the breakeven point. After considering the cost and benefit results, a decision is made to stop consideration of the NOCN or to continue to develop and design such a network.

6.2.2 Sources of ME Cost Savings with NOCN. Cost savings in future E-4B modifications will be realized from an "in place" NOCN in the areas of integration, and maintenance and logistics support. The integration area expands into engineering, facilities, labor, and documentation cost savings.

a. Engineering costs are reduced because connectivity requirements are satisfied by the standardized network and dedicated point-to-point connections need not be planned. It is only required that the ME interface to an interface node in the backbone fiber optic network.

b. Labor and facilities cost less due to reduced modification times.

c. Documentation costs are reduced because a limited number of optical fiber cables compared to point-to-point wire-based cables are required.

d. ME should be easier to maintain because problems can be quickly isolated and corrected. Interface cards for ME are interchangeable, which could reduce stock spares, thereby reducing logistics costs.

6.2.3 Additional Benefits of NOCN. The NOCN provides additional benefits other than cost savings to enhance the NEACP mission effectiveness. Because the network reduces the amount of time necessary for modifications, the E-4B aircraft availability is increased. Quicker modifications mean rapid fielding of improved capabilities. Network technology provides the flexibility to modify the network configuration with changing circumstances and requirements. Greater interoperability and interchangeability provides increased flexibility among ME. The conversion of intercompartment wiring connections to a fiber-optic network provides weight savings.

The increased capabilities provided by a network solution will reduce or eliminate the need for some current systems. For example, the technical control capability can be partially satisfied by the station management features offered by the network. FDDI provides a potential for a voice switching capability that eliminates the need for the existing switching equipment (ATSS, MTSS and SVSE).

6.2.4 10-Year Cost Estimate With and Without NOCN. Figure 6-2 illustrates the estimated total cost of integrating new mission systems into the NEACP over a 10-year timeframe with and without NOCN. The NOCN cost range is included. The crossover point between the cost with NOCN and the cost without NOCN indicates the number of years required for the NOCN to pay for itself, based on the stated assumptions.

This analysis assumes (1) two mission equipment integrations per year; (2) an integration cost of $1M per system without NOCN; (3) an integration cost of $0.9M per system with NOCN; (4) a NOCN cost range from $1M to $2M; and (5) no change in recurring costs with or without NOCN present.

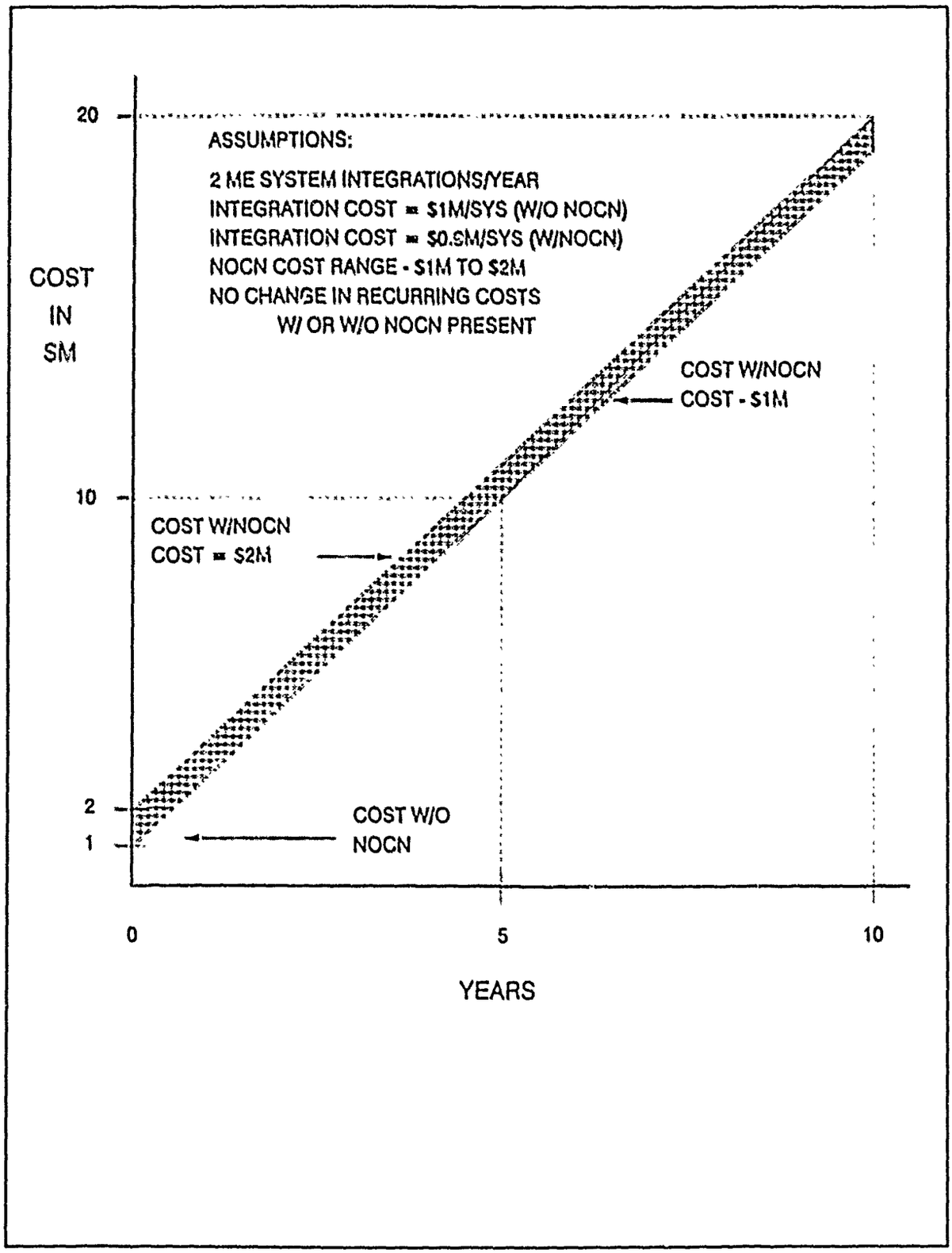

Figure 6-2. 10-Year Cost Estimate with and without NOCN

The assumptions shown in the figure were used to perform the breakeven analysis. The cost curve representing the total cost without the NOCN in place shows that the cost is $10M after five years and $20M after ten years given the assumptions. If the NOCN were in place a slight savings would be realized with each system integration. As more integrations are undertaken, more cost savings are accumulated. In the example, if the NOCN cost is $1M, sufficient cost savings will be realized to equal the NOCN cost after five years and 10 ME system integrations. If the NOCN cost is $2M, sufficient cost savings will be realized to equal the NOCN cost after 10 years and 20 ME system integrations. The cross-hatched region on the slide represents a $1M uncertainty in the cost of NOCN per aircraft.

SECTION 7. SUMMARY

7.1 NOC Quick Study Approach

This study analysis began with the hypothesis that a new information distribution network on the E-4B could simplify NEACP onboard connectivity and, at the same time, increase aircraft availability by reducing future system installation time and cost. The technical approach reviewed and analyzed the most likely candidates for a NOC bus concept, transmission media, and network concepts. The alternatives considered and results of this technical analysis are illustrated in figure 7-1 and discussed in the following sections.

7.2 Technical Alternatives

The study initially focussed on the onboard connectivity requirements for all E-4B voice and data systems planned or projected to be on the aircraft by the mid-1990s. Three voice switching approaches were evaluated for integration with the NOCN. Then, five different levels of systems to be served by the new network were considered. Next, four potential transmission media were investigated for E-4B application. Finally, four network protocols were considered.

7.2.1 Voice Switching. The evaluation of the E-4B's voice switching system considered future switch replacements (ATSS, MTSS, and SVSE) due to expected shortfalls in logistics supportability, switch growth margins, and projected need for integrated voice and data capability. Three approaches were evaluated. The first approach supports retaining the existing switching system which, in effect, defers long-range planning for eventual switch replacement and nullifies potential gains from newer switching technology. In the second approach, off-the-shelf

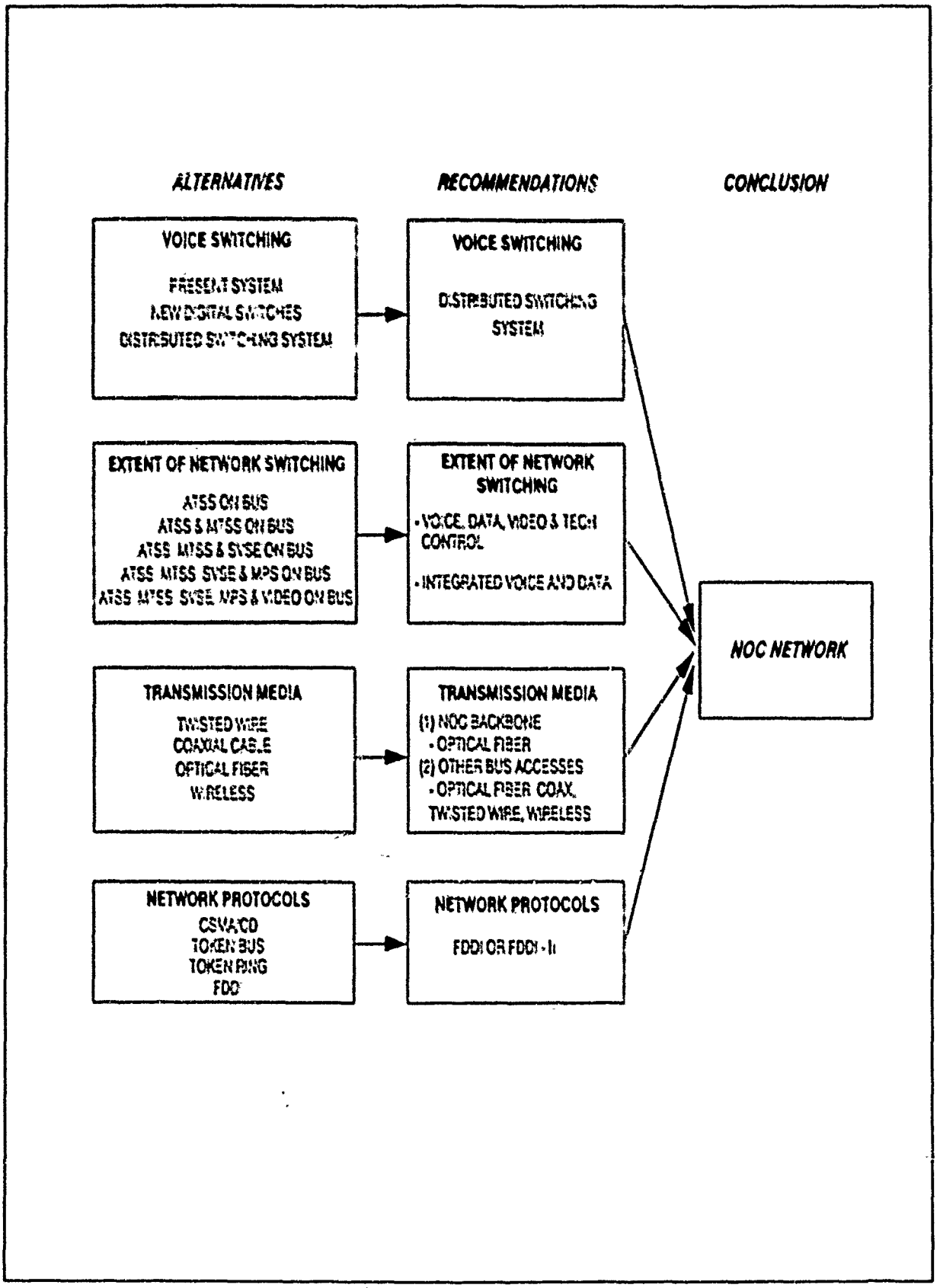

Figure 7-1. NOC Quick Study Comparisons

central digital switches were analyzed for replacing the existing analog switches. While reducing the drawbacks of supportability and growth margins associated with the first approach, centralized digital switching technology would still require a developmental effort and would introduce the potential for a single switching point-of-failure. The last approach investigated integrating distributed switching technology into the network nodes through software control, thereby overcoming the earlier switching limitations and still providing the required switching service.

7.2.2 Extent of Network Switching. The NOCN will incorporate the functions of three analog switching systems (ATSS, MTSS, and SVSE), a digital processing system (MPS), video, and network management. Greater operational demands on the aging analog voice switching system established the basis for considering a replacement switching architecture. The increasing complexity of incorporating the function of these systems on a generic bus ranged from a BLACK audio bus (ATSS functions only on bus) to an integrated voice, data and video bus (ATSS, MTSS, SVSE, MPS, video functions on bus). This preliminary technical analysis suggests that an evolutionary phase-in of these switching and data processing systems is feasible for each bus configuration.

7.2.3 Transmission Media. Four transmission media were investigated for handling onboard communications to support the NEACP mission. The twisted wire pair conductors, now on the E-4B, meet current operational needs. Coaxial cable, used in other voice and data networks, suggested a potential application on the E-4B Increasing applications and availability made optical fiber particularly attractive. Lastly, eliminating all intercompartment signal and control wiring on the E-4B made a wireless network using low-power radios worth considering. An assessment of these four approaches is provided below.

a. Twisted Wire. Limited bandwidth and susceptibility to interference negate the use of this medium for high-performance, wideband digital applications.

b. Coaxial cable. This medium could meet the future network bandwidth requirements of the E-4B. However, the need for head-end electronics and frequency-agile modems diminishes the acceptability of this approach.

c. Optical Fiber. This choice provides the most acceptable wideband bus approach to information-handling and distribution. Unlike the other alternatives, its light weight, exceptional bandwidth, and noise immunity meet or exceed NOC performance requirements. In addition, available COTS/NDI hardware and software based on approved and documented standards reduces the time and cost associated with interfacing communication-electronic nodes to fiber-optic buses.

d. Wireless. This alternative represents the cutting edge of new bus technology and is being demonstrated in limited applications. Wireless technology (RF) was unsuitable for this approach because the capacity was insufficient.

7.2.4 Network Protocols. This study evaluated four network protocols for media access to the NOCN. The advantages and disadvantages of these four approaches are addressed below.

a. IEEE 802.3 CSMA/CD. This mature standard finds wide application in data communications and office automation due to its low cost and wide availability of products and vendors. Since packet collisions are assumed to be a normal operational occurrence, this protocol is unacceptable for nonblocking voice and data communications during NEACP operations. In addition, the information throughput at 10 Mbps cannot handle the projected NOCN communications traffic.

b. IEEE 802.4 Token Bus. The token bus services office automation and control data applications where its deterministic

characteristics ensure packet collision avoidance. Its ability to bypass inoperative stations improves token bus reliability. Like the IEEE 802.3 standard, the 10 Mbps capacity of the token bus would quickly degenerate under a full NOCN traffic load.

c. IEEE 802.5 Token Ring. This deterministic protocol supports office automation and dumb terminal-to-mainframe data transfer at 4 or 16 Mbps. However, it fails to meet the data rate capacity or future growth requirements for integrated voice, data, and video communications to support NEACP communications.

d. ANSI X3T9.5 FDDI. The FDDI standard overcomes the technical and growth shortcomings of the three previous standards. Designed for 100 Mbps data rates over a fiber optics network, the FDDI standard has the capacity to handle the future communications throughput requirements for the NEACP. With the expected approval of FDDI-II, voice switching combined with data and compressed video can be integrated for the first time on NOCN. Additional benefits of this fiber-optics based protocol include low cable weight, non-susceptibility to EMC/RFI, and multi-vendor product availability.

7.3 Technical Recommendations

For maximum connectivity requirements where all authorized, planned, or projected programs are included, a low-risk technical approach represents the best solution applicable to the NEACP mission. Considering the NOC bus concepts, media transmission, and network concepts, the following recommendations emerge based on technical merits.

a. Voice Switching. A distributed switching system which sends digitized voice over a data network best meets the future integrated voice and data needs on the E-4B.

b. Extent of Network Switching. The end goal is an integrated voice and data transfer network which encompasses all information-handling and switching functions which occur on the E-4B.

c. Transmission Media. A optical fiber cable plant is best suited for the E-4B and meets projected traffic loads while providing ample future growth capability. This fiber-optic backbone will interface with other media accesses to the bus (e.g. optical fiber, coaxial cable, twisted pair, and wireless).

d. Network Protocol. A distributed network concept using FDDI protocols is recommended for the E-4B. FDDI-II provides protocols for voice, data, and limited motion video over an optical fiber cable. FDDI, with a separate voice system, can provide an interim solution to a full FDDI-II implementation on the NOCN. This same optical fiber cable used for FDDI (data only protocols) and much of the same nodal hardware and software can be used for FDDI-II.

SECTION 8. CONCLUSIONS

This analysis of the NEACP onboard connectivity has identified a technology which will be available to meet the NEACP connectivity requirements. Conclusions are made based on the technology study and the cost analysis investigation.

FDDI-II is the recommended technology since it is presently the only network that satisfies all of the requirements used in this study. It is the only technology that will meet the requirements: to adhere to GOSIP and use COTS technology, to reserve capacity for future services including limited motion video, and be able to integrate voice and other circuit-switched traffic on the network. The FDDI-II ring-of-trees architecture is well suited to the compartmentalized layout of the NEACP. It also has the advantages of having a fault tolerant design as well as the RFI/EMI/EMP immunity inherent to fiber-optic technology.

An onboard connectivity network has been proposed for the NEACP to simplify and reduce future system integration and costs. The savings brought about by the network are dependent upon the number of mission systems integrated since the network will eliminate a portion of the integration costs for each new or modified system.

The additional benefits, previously stated, although difficult to quantify, may provide the most persuasive rationale for integrating the NOCN on the NEACP.

SECTION 9. RECOMMENDATIONS

Considering the advantages of the NOCN, all actions necessary to integrate the NOCN on the NEACP aircraft should be applied. A further level of detail for the NOCN design should be accomplished, funding arrangements should be made, and a program to implement the NOCN should begin. The recommended actions and responsible agency to accomplish these program initiatives for the NOCN integration on the E-4B are listed below:

a. DCA/C4S continue to monitor SAFENET II Program efforts for FDDI-II applications and evaluate other technically fertile areas for NOCN application such as technical control reduction efforts.

b. The Joint Staff (J6) support development of a requirement operational capability (ROC) to support continued NOCN development.

c. The WWABNCP (Worldwide Airborne Command Post) SPO (System Program Office) and E-4B SPM (System Program Manager) develop preliminary funding profiles for current and outyear funding to support NOCN development on the E-4B.

SECTION 10. GLOSSARY

ACP	Advanced Communications Processor
A/D-D/A	Analog-to-Digital and Digital-to-Analog
ADP	Automatic Data Processing
AEPDS	Automatic Emergency Action Message Processing and Dissemination System
AFSATCOM	Air Force Satellite Communications
AM	Amplitude Modulation
ANDVT	Advanced Narrowband Digital Voice Terminal
ANSI	American National Standards Institute
ATSS	Automatic Telephone Switching System
AUTODIN	Automatic Digital Network
BI	Bus Interface
bps	bits per second
C3	Command, Control, and Communications
CNN	Cable News Network
COTS	Commercial-off-the-Shelf
CPU	Central Processing Unit
CSMA/CD	Carrier Sense Multiple Access/Collision Detection
DAM	Device Adaptor Module
EIA	Electronics Industry Association
EMC	Electromagnetic Compatibility
EMI	Electromagnetic Interference
EMP	Electromagnetic Pulse
FAA	Federal Aviation Administration
FAX	Facsimile
FDDI	Fiber Distributed Data Interface
FDM	Frequency Division Multiplexing
GLSIU	Ground Line Signaling Interface Unit
GOSIP	Government Open Systems Interconnection Profile
GWEN	Ground Wave Emergency Network
HF	High Frequency
HRC	Hybrid Ring Control
HSP	High Speed Printer
IEEE	Institute of Electrical and Electronics Engineers
I/O	Input/Output
ISO	International Standards Organization
IU	Interface Unit
kbps	kilobits per second

LAN	Local Area Network
LF	Low Frequency
LSAC	Link Select Attendant Control
MAC	Media Access Control
Mbps	Megabits per second
ME	Mission Equipment
Milstar	Military Strategic/Tactical and Relay
MPS	Message Processing System
MTSS	Manual Telephone Switching System
MWTTY	Missile Warning Teletype
NCA	National Command Authorities
NDI	Nondevelopment Item
NEACP	National Emergency Airborne Command Post
NOC	NEACP Onboard Connectivity
NOCN	NEACP Onboard Connectivity Network
NOSC	Naval Ocean Systems Center
NPES	Nuclear Planning and Execution System
NTSC	National Television System Committee
PBX	Private Branch Exchange
PC	Personal Computer
PHY	Physical Layer Protocol
PMD	Physical Media Dependent
PME	Primary Mission Equipment
PS	Power Supply
RF	Radio Frequency
SAFENET	Survivable Adaptable Fiber Optics Embedded Network
SHF	Super High Frequency
SIOP	Single Integrated Operational Plan
SM-ALC PTC	Sacramento Air Logistics Center Photonics Technology Center
SMT	Station Management Protocol
STU	Secure Telephone Unit
SVSE	Secure Voice Switching Element
UHF	Ultra-high Frequency
VDU	Video Display Unit
VLF	Very Low Frequency
VME	Versa-Module Europe
WDM	Wavelength Division Multiplexing
WS	Work Station

REFERENCES

1. Memorandum for DCA/A550 from the Joint Staff, NEACP APO, 28 June 1989.

2. Ebel, LCDR Kevin, USN, and Kevin Mills, "GOSIP Protocols to be Used for Industry Bids," Signal, Vol. 44, No. 7, pp. 74-78.

3. Badertscher, L., and S. Steinberg, March 1989, NEACP Engineering Plan Volume III, NEACP C3 Systems Transition Plan (U), MTR-89W00038-03, The MITRE Corporation, McLean, Virginia, SECRET.

4. Zeigler, J., "MIL-STD 1553 Takes Over Serial Bus Designs, Computer Design, 1 September 1989, pp. 99-102.

5. Airst, M., and R. Curry, Modular Building Concept (MBC) Design Guidelines, Vol. 2, System Connectivity, the MITRE Corporation, McLean, Virginia, February 1989.

6. Martin Marietta Corporation, SAFENET II, A System Integration's Tool, 1989.

7. Head, T. "FDDI: What Will It Cost?," Fiber Optics Magazine, Vol 11, No. 3, June 1989.

8. Sacramento Air Logistics Center, Preliminary Material Cost Estimate and Information Report for an FDDI Fiber Optic System on the E-4B, McClellan Air Force Base, California, 28 February 1990.

APPENDIX A

VME COST ESTIMATE
(Estimated for mid-1990s)

The VME node, one of two types of hardware techniques, is discussed in this appendix. The node processor, the other hardware technique, is discussed in Appendix B.

The VME cost items, shown in table A-1, provide the building blocks for the bus interface (BI). The VME assembly includes the required components for each interface node. The optional interface boards, which are VME compatible, plug into the VME chassis. The interface requirements of the connecting ME determine each chassis configuration.

VME components are available as off-the-shelf commercial products for general office use or military-qualified products for field or airborne environments. Additional costs are associated with ensuring that MIL-STD products operate properly under harsh environmental conditions.

Cost information in table A-1 was provided mainly from vendor responses. The FDDI interface cost was based on a predicted drop in the 1990 cost of $16,000 to $5,000 for commercial boards after the standard has been approved (reference 7). Other cost estimates were based on information provided from multiple vendor sources.

VME Node Cost Estimates (Estimated for mid-1990s)

The node cost includes the VME assembly, consisting of a VME chassis with backplane, VME central processing unit (CPU) board, and an FDDI interface board. Optional interface boards are also included. The costs shown in table A-2 were derived from those presented in table A-1.

To determine a per-node average cost, some node configurations were determined. These do not represent all possible configurations, but rather a representative group of options. Three options are shown with commercial and military costs.

Two VME node costs are shown: a full MIL-STD node and a full commercial grade node. These node types represent the full range of VME node costs. Many grades are available within this range that may be applicable to NEACP implementation.

Table A-1. VME Cost Items (Estimated for Mid-1990s)

Basic VME Assembly	Commercial	MIL-STD
VME Chassis W/ Backplane	$ 3,200	$10,000
VME CPU Board	3,000	5,000
FDDI Interface Board	5,000	8,000
	$11,200	$23,000
Optional Interface Boards		
CPU On Card (DAM Applications)	$ 8,200	$14,000
Serial I/O Board	1,500	3,000
Synchronized Channel Controller	7,000	12,000
Digital/Analog-Analog/Digital Converter	4,200	8,700
Ethernet Controller Boards	4,000	8,000
MIL-STD-1553B Data Bus Interface Boards	6,000	8,100

Table A-2. VME Node Cost (Estimated for Mid-1990s)

Possible Chassis Configurations of Optional Interface Boards	Commercial	MIL-STD
Configuration #1	$11,700	$23,700
5 Serial I/O Boards		
1 D/A-A/D Converter		
Configuration #2	17,000	28,100
1 Ethernet		
1 MIL-STD 1553B		
1 Syncho Channel		
Configuration #3	20,600	36,700
2 DAM Card		
1 D/A-A/D		
Average Interface Card Configuration Cost	$16,500	$29,500

Node Cost	Basic VME Assembly		Optional Interface Boards		Cost Per VME Node
Commercial Assembly w/Commercial Boards	$11,200	+	$16,500	=	$27,700
MIL-STD Assembly W/MIL-STD Boards	$23,000	+	$29,000	=	$52,500

Hardware Cost Estimate (Estimated for mid-1990s)

An assumption has been made that 20 nodes will be required for full system connectivity. This amount is based on integrating one to three nodes per compartment according to the number of ME interfaces required. This assumption is an estimate; a more detailed design will identify the actual number of nodes required. The two types (MIL-STD and commercial) are shown in table A-3 to represent the full range of possible costs. Additional hardware includes cabling, connectors, and other components required for the network. It is assumed that $50,000 is adequate for all miscellaneous hardware items.

Table A-3. Estimated Mid-1990s VME System Cost for the NEACP

Components	Commercial	MIL-STD
Cost of 20 Nodes for Network Interface	$554,000	$1,050,000
Fiber Optic Cable, Connectors, etc.	50,000	50,000
Total	$604,000	$1,100,000

Note: Integration cost of $200,000 - $1,000,000 is an additional cost.

APPENDIX B

NODE PROCESSOR COST ESTIMATES (Estimated for mid-1990s)

The Photonics Technology Center (PTC) of the Sacramento Air Logistics Center was asked by DCA to provide a cost estimate of implementing an FDDI network on the NEACP. The PTC's charter is to assist the integration of fiber-optic technology into airborne platforms for the United States Air Force. Because the recommended technology includes a fiber-optic implementation, the PTC provided a node processor cost estimate independent of the VME cost estimate previously discussed in this paper (reference 8).

The cost estimate shown in table B-1, included commercialized connectors and cables suitable for FDDI compatible interface board components. The cost estimate is based on the assumptions shown.

Table B-1. Node Processor Cost Estimates for 100 Nodes Assuming All FDDI Compatible Equipment

Assumptions	Cost Estimate (100 Nodes)	
Dual redundant optical fiber cable	Connectors ($35 each)	$ 7,000
Power and node processors provided	Optical Wave guide ($2/meter)	1,000
100 nodes required and all attached to ring	Transceivers ($500 each)	100,000
Estimates of FDDI-compatible equipment	Chipsets ($300 each)	30,000
	Total	$138,000

Additional Assumptions

No unique engineering costs

COTS (not militarized)

NODE PROCESSOR HARDWARE COST ESTIMATES (Estimated mid-1990s)

An assumption of 20 nodes for full system connectivity is made based on PTC's cost estimates. This assumption is made to be consistent with the VME hardware cost estimates. MIL-STD and commercial costs are calculated to represent the full range of possible costs. Additional hardware costs mainly include ring concentrators. Ring concentrators are used to eliminate numerous nodes by attaching more than one piece of mission equipment to the node. Although each node may not require a ring concentrator, for the purpose of this study, all 20 nodes use ring concentrators. Node processor hardware cost estimates are shown in table B-2.

Table B-2. Estimate Mid-1990s Node Processor System

Components	Commercial	MIL-STD
Cost of 20 Nodes for Network Interface Interpolated from Table B-1 (includes fiber optic cables connections)	$27,600	$ 55,200
Added Cost for Ring Concentrators	400,000	800,000
Total	$427,600	$855,200

Note: Integration cost of $200,000 - $1,000,000 is an additional cost.

DISTRIBUTION

Addressee	Copies
DCA Codes	
SS	1
SSM	1
SSS	1
SC	1
SCCC	2
SCCA	2
CPI	1
Defense Technical Information Center ATTN: DTIC-DDR-2 Cameron Station, Bldg 5 Alexandria, VA 22314	1
Deputy Director for Command and Control Communications The Joint Staff (J6) Washington, DC 20301-5000	1
National Emergency Airborne Command Post The Joint Staff ATTN: NEACP/APO/SC Building 524 Offutt AFB, NE 68113-5000	4
Department of the Air Force ATTN: HQ USAF/SCXCS/LEYY/XOOSS Washington, DC 20330-5190	3
Commander in Chief Strategic Air Command ATTN: DOCA/XRF/SCOOP Offutt AFB, NE 68113-5001	3
Oklahoma City Air Logistics Center ATTN: MMSZ/MMAM Tinker AFB, OK 73145	2
MITRE Corporation Washington C^3I Division ATTN: Dept W33 7525 Colshire Drive McLean, VA 22102-3401	1
Sandia National Laboratories ATTN: DIV 5173 Albuquerque, NM 87185	1

Sacramento Air Logistics Center
ATTN: MMETP
McClellan AFB, CA 95652-5990..... 1

Secretary of the Air Force
ATTN: AQS
Washington, DC 20330..... 1

TOTAL 27

UNCLASSIFIED
SECURITY CLASSIFICATION OF THIS PAGE

REPORT DOCUMENTATION PAGE

Form Approved
OMB No. 0704-0188

1a REPORT SECURITY CLASSIFICATION UNCLASSIFIED	1b RESTRICTIVE MARKINGS
2a SECURITY CLASSIFICATION AUTHORITY	3 DISTRIBUTION/AVAILABILITY OF REPORT As it appears in the report.
2b DECLASSIFICATION/DOWNGRADING SCHEDULE	
4 PERFORMING ORGANIZATION REPORT NUMBER(S)	5 MONITORING ORGANIZATION REPORT NUMBER(S) TR 90-6
6a NAME OF PERFORMING ORGANIZATION Electrospace Systems, Inc.	6b OFFICE SYMBOL (If applicable)
	7a NAME OF MONITORING ORGANIZATION Director, C4S (SCCA)
6c ADDRESS (City, State, and ZIP Code) 1725 South Jefferson Davis Hwy Suite 501 Arlington, Virginia 22202	7b ADDRESS (City, State, and ZIP Code) Defense Communications Agency 3701 North Fairfax Drive Arlington, Virginia 22203
8a NAME OF FUNDING/SPONSORING ORGANIZATION	8b OFFICE SYMBOL (If applicable)
	9 PROCUREMENT INSTRUMENT IDENTIFICATION NUMBER
8c ADDRESS (City, State, and ZIP Code)	10 SOURCE OF FUNDING NUMBERS

PROGRAM ELEMENT NO	PROJECT NO	TASK NO.	WORK UNIT ACCESSION NO

11 TITLE (Include Security Classification)
NEACP Onboard Connectivity Network

12 PERSONAL AUTHOR(S)
Pellegrini, Charles A.

13a TYPE OF REPORT	13b TIME COVERED	14 DATE OF REPORT (Year, Month, Day)	15 PAGE COUNT
Technical	FROM _____ TO _____	900330	80

16 SUPPLEMENTARY NOTATION

17 COSATI CODES			18 SUBJECT TERMS (Continue on reverse if necessary and identify by block number)
FIELD	GROUP	SUB-GROUP	
25	5		National Emergency Airborne Command Post (NEACP), Connectivity

19 ABSTRACT (Continue on reverse if necessary and identify by block number)

The operational availability of the E-4B fleet can be measurably improved by reducing the time of new C3 integrations and modifications on these aircraft. This quick study examines alternative ways to achieve greater flexibility and speed by which E-4B enhancements are installed through the use of broadband bus technology. A broadband bus will have sufficient bandwidth growth margin to meet current and future NEACP onboard connectivity user needs for voice, data, control, status and limited-motion video communications. An assessment of available technologies shows that fiber optics and the FDDI standard meet NEACP connectivity requirements. A cost analysis estimates NEACP onboard connectivity network (NOCN) costs. Also included is a methodology framework that outlines the steps necessary to determine the break-even point of the NOCN, where the network will pay for itself through cost off-sets.

20 DISTRIBUTION/AVAILABILITY OF ABSTRACT	21 ABSTRACT SECURITY CLASSIFICATION
☐ UNCLASSIFIED/UNLIMITED ☒ SAME AS RPT. ☐ DTIC USERS	UNCLASSIFIED

22a NAME OF RESPONSIBLE INDIVIDUAL	22b TELEPHONE (Include Area Code)	22c OFFICE SYMBOL
Kathleen M. Harrigan	(703) 696-1871	SCCA

DD Form 1473, JUN 86 *Previous editions are obsolete.* SECURITY CLASSIFICATION OF THIS PAGE

UNCLASSIFIED