①

NASA Contractor Report 185296

# Space Station Auxiliary Thrust Chamber Technology

Final Report 2210-90-FR

Philip J. Robinson
GenCorp Aerojet
Propulsion Division
Sacramento, California

July 1990

Prepared for
Lewis Research Center
Under Contract NAS3-24398

NASA
National Aeronautics
and Space Administration

# DISCLAIMER NOTICE

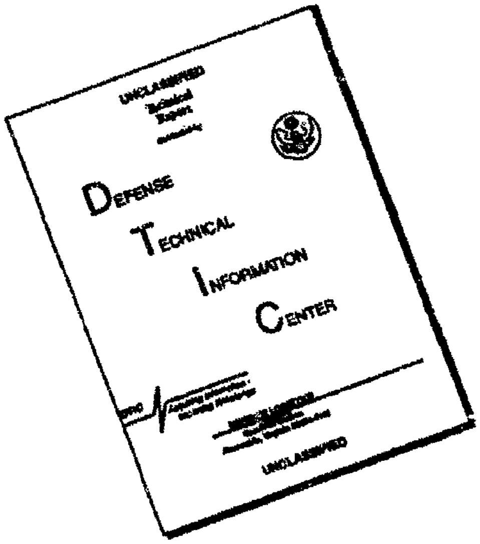

UNCLASSIFIED

DEFENSE TECHNICAL INFORMATION CENTER

UNCLASSIFIED

# SPACE STATION

# AUXILIARY THRUST CHAMBER TECHNOLOGY

Final Report

Prepared For:

National Aeronautics and Space Administration
Lewis Research Center
Cleveland, Ohio 44135

July 1990

Contract NAS 3-24398

Approved By:

B L Reimer
B. L. Reimer,
Program Manager
Space Propulsion

Prepared By:

P. J. Robinson
P. J. Robinson
Project Engineer
Space Station Propulsion

GenCorp Aerojet
Propulsion Division
Sacramento, California 95813

## TABLE OF CONTENTS

Page

I. Summary 1
II. Introduction 2
III. Space Station Thruster No. 1 6
    A. Design Approach 6
        1. Design Background 6
        2. Design Concept 6
        3. Design Point 9
    B. Design Analysis 9
        1. Ignition Analysis 9
        2. Thermal Analysis 9
        3. Performance Analysis 22
        4. Chamber Life Analysis 22
    C. Design Description and Fabrication 25
    D. Test 30
        1. Test Setup 30
        2. Instrumentation 30
        3. Test Summary 30
        4. Experimental Results 39
    E. Evaluation of Results 44
    F. Conclusions 55
IV. Space Station Thruster No. 2 56
    A. Design Approach 56
        1. Design Background 56
        2. Design Concept 56
        3. Design Point 59
    B. Design Analysis 59
        1. Ignition Analysis 59
        2. Thermal Analysis 65
        3. Performance Analysis 65
        4. Chamber Life Analysis 65
    C. Design Description and Fabrication 65

## TABLE OF CONTENTS (cont.)

Page

- D. Test 72
  - 1. Test Setup 72
  - 2. Instrumentation 72
  - 3. Test Summary 76
  - 4. Experimental Results 86
- E. Evaluation of Results 86
- F. Conclusions 114

V. References 115

Appendix A: Detail Drawings, Thruster No. 1 A-1

Appendix B: Test Data, Thruster No. 1 B-1

Appendix C: Performance Prediction Methodology C-1

Appendix D: Detail Drawings, Thruster No. 2 D-1

## LIST OF TABLES

| Table No. | | Page |
|---|---|---|
| I | Design Requirements for Thruster No. 1 | 4 |
| II | Design Requirements for Thruster No. 2 | 5 |
| III | Thruster No. 1 Design Point | 10 |
| IV | Space Station Thruster No. 1 Spark Igniter Operating Characteristics | 15 |
| V | Test Instrumentation Space Station Thruster No. 1 | 35 |
| VI | Thruster No. 1 Test Summary for Mixture Ratio Range | 37 |
| VII | Thruster No. 1 Test Summary for Percent Fuel Film Cooling Range | 38 |
| VIII | Design Points, NASA LeRC Space Station Thrusters | 63 |
| IX | Space Station Thruster No. 2 Spark Igniter Operating Characteristics | 64 |
| X | Design Point Performance Prediction for Thruster No. 2 | 67 |
| XI | Test Instrumentation Space Station Thruster No. 2 | 77 |
| XII | Thruster No. 2 Test Summary | 84 |
| XIII | Thruster No. 2 Test Summary for Percent Film Cooling Range | 85 |
| XIV | Test Data Summary for Test No. 166 | 92 |
| XV | Test Data Summary for Test No. 193 | 93 |
| XVI | Test Data Summary for Test No. 199 | 94 |
| XVII | Test Data Summary for Test No. 207 | 95 |
| XVIII | Test Data Summary for Test No. 227 | 96 |

## LIST OF FIGURES

| Figure No. | | Page |
|---|---|---|
| 1 | Vacuum Specific Impulse vs Mixture Ratio | 3 |
| 2 | Proven Spark Torch Igniter Concept | 7 |
| 3 | Cutaway of Thruster No. 1 Assembly | 8 |
| 4 | Paschen's Low Curve for Air | 11 |
| 5 | Flame Quenching Limit for $O_2/H_2$ | 12 |
| 6 | Minimum Spark Energy Requirements for $O_2/H_2$ Propellants | 13 |
| 7 | Spark Ignition Limits: High Pressure, Low Pressure, Minimum Energy Limits | 14 |
| 8 | Experimentally Determined Effect of Fuel Film Coolant on Delivered Specific Impulse and Mixing Efficiency | 16 |
| 9 | Typical Fit of Reference 5 Thermocouple Data with Conduction Code Prediction | 18 |
| 10 | Space Station Thruster Convergent Section Cg Profile | 19 |
| 11 | Comparison of Throat Heat Transfer with Turbulent and Laminar Correlations | 20 |
| 12 | Comparison of Reference 5 Thruster Adiabatic Wall Temperature Profile with HOCOOL Prediction | 21 |
| 13 | Predicted Mixing Efficiency, $E_m$, for Overall Mixture Ratio | 23 |
| 14 | Predicted Performance for Overall Mixture Ratio | 24 |
| 15 | Manson-Halford Method of Universal Slopes for Low Cycle Fatigue | 26 |
| 16 | Machined ZrCu Chamber Liner - Thruster No. 1 | 27 |
| 17 | Completed Chamber Assembly - Thruster No. 1 | 28 |
| 18 | Sleeve Insert | 29 |
| 19 | Aerojet Altitude Test Facility for Small Thrusters | 31 |
| 20 | Thruster Mounted to the Thrust Measuring Test Stand | 32 |
| 21 | Test Cell with Mounted Test Stand | 33 |
| 22 | Chamber Thermocouple Location | 34 |
| 23 | Backside Temperature Profile with 60 Percent FFC | 40 |
| 24 | Backside Temperature Profile with 75 Percent FFC | 41 |
| 25 | Maximum Backside Temperature Variation with FFC | 42 |
| 26 | Maximum Backside Temperature Variation with Mixture Ratio | 43 |
| 27 | Performance Variation with Percent FFC | 45 |
| 28 | Performance Variation with Mixture Ratio | 46 |
| 29 | Two Mixing Zones of Thruster Design | 47 |

## LIST OF FIGURES (cont.)

| Figure No. | | Page |
|---|---|---|
| 30 | Energy Release Efficiency and Specific Impulse Trends with Increasing O/F | 50 |
| 31 | Energy Release for Constant % FFC and Velocity Ratio | 51 |
| 32 | Current Space Station Thruster Has Inadequate $H_2/O_2$ Momentum Flux Ratio and Mixing Length for Core Flow at High Mixing Ratio | 52 |
| 33 | Momentum Flux Ratio for Different % FFC and O/F | 53 |
| 34 | ERE for Increasing % FFC and Momentum Flux Ratio | 54 |
| 35 | Mixing Efficiency, $E_T$, for Thruster No. 1 | 57 |
| 36 | Thruster No. 2 Assembly | 58 |
| 37 | Redesign of Injector/Sleeve Interface | 60 |
| 38 | Momentum Flux Ratio Compared for Thruster Nos. 1 and 2 | 61 |
| 39 | Mixing Efficiency, $E_T$, Compared for Thruster Nos. 1 and 2 | 62 |
| 40 | Predicted Gas-Side Wall Temperature Profile for Nominal Chamber Pressure | 66 |
| 41 | Predicted Gas-Side Wall Temperature Profile for 40 Percent of Nominal Chamber Pressure | 68 |
| 42 | Predicted Gas-Side Wall Temperature Profile for 135 Percent of Nominal Chamber Pressure | 69 |
| 43 | Performance Predictions for Operating Range of Thruster No. 2 | 70 |
| 44 | Effects of Nozzle Extensions on Delivered Performance | 71 |
| 45 | Machined ZrCu Chamber Liner for Thruster No. 2 | 73 |
| 46 | Thruster Chamber Assembly - Aft End | 74 |
| 47 | Thruster Chamber Assembly - Head End | 75 |
| 48 | Instrumentation Schematic for Space Station Thruster No. 2 | 79 |
| 49 | Axial Positions of Thermocouples | 80 |
| 50 | Internal Thermocouple (TCI) Row Designations | 81 |
| 51 | Row A and Row C Thermocouples | 82 |
| 52 | Row B and Row D Thermocouples | 83 |
| 53 | Predicted vs Measured Performance for an Assumed Injector ERE of 97.0% | 87 |
| 54 | Predicted vs Measured Performance for an Assumed Injector ERE of 96.1% | 88 |
| 55 | Measured vs Predicted Wall Temperatures at the Design Point | 89 |
| 56 | Thermocouple Grid Positions | 91 |
| 57 | Measured Back-Side Wall Temperatures for Test No. 166 | 97 |
| 58 | Measured Back-Side Wall Temperatures for Test No. 193 | 98 |

## LIST OF FIGURES (cont.)

| Figure No. | | Page |
|---|---|---|
| 59 | Measured Back-Side Wall Temperatures for Test No. 199 | 99 |
| 60 | Measured Back-Side Wall Temperatures for Test No. 207 | 100 |
| 61 | Measured Back-Side Wall Temperatures for Test No. 227 | 101 |
| 62 | Predicted vs Measured Back-Side Wall Temperatures for the Thruster Design Point | 102 |
| 63 | Cgn Profile for Calibrated Model | 103 |
| 64 | Predicted Stream Tube Mixture Ratios | 104 |
| 65 | Predicted Adiabatic Wall Temperatures | 105 |
| 66 | Predicted vs Measured Back-Side Wall Temperatures for Test No. 193 | 106 |
| 67 | Predicted vs Measured Back-Side Wall Temperatures for Test No. 207 | 107 |
| 68 | Predicted vs Measured Back-Side Wall Temperatures for Test No. 227 | 108 |
| 69 | Predicted vs Measured Back-Side Wall Temperatures for Test No. 166 | 109 |
| 70 | Predicted Maximum Wall Temperatures for Design Point | 111 |
| 71 | Revised Space Station Thruster Performance Predictions for Calibrated Thermal Model | 112 |
| 72 | Performance Improvement for Space Station Thruster No. 2 | 113 |

National Aeronautics and Space Administration

# REPORT DOCUMENTATION PAGE

1. Report No.
NASA-CR-185296

2. Government Accession No.

3. Recipient's Catalog No.

4. Title And Subtitle
Space Station Auxiliary Thrust Chamber Technology

5. Report Date
July 1990

6. Performing Organization Code

7. Author(s)
Philip J. Robinson

8. Performing Organization Report No.

10. Work Unit No.
506-42-31

9. Performing Organization Name and Address
GenCorp Aerojet
Propulsion Division
P.O. Box 13222
Sacramento, CA 95813-6000

11. Contract or Grant No.
NAS 3-24398

13. Type of Report and Period Covered
Contractor Report Final

12. Sponsoring Agency Name and Address
National Aeronautics and Space Administration
Lewis Research Center
Cleveland, Ohio 44135-3191

14. Sponsoring Agency Code

15. Supplementary Notes
Project Manager - Dr. Steven J. Schneider, Space Propulsion Technology Division
NASA Lewis Research Center

16. Abstract

The objective of the program documented herein was to establish a technical data base to support future development of GO2/GH2 flight thrusters for a Space Station Auxiliary Propulsion System. Specific issues of concern were thruster performance and cycle life. To address these issues, NASA funded Aerojet to design, fabricate and altitude test two 25-lbf GO2/GH2 thrusters. The first thruster was designed to operate at a nominal mixture ratio (O/F) of 4.0 and expansion area ratio (ε) of 100:1. It was tested over a range of O/F from 2.0 to 8.0, achieving a range of specific impulse (Isp) from 440 to 310 lbf-sec/lbm. The second thruster was optimized for a nominal O/F of 8.0 at a lower nozzle expansion area ratio ε of 30:1. This second thruster was tested over an O/F range of 3.0 to 9.5, achieving an Isp range of 416 to 3323 lbf-sec/lbm, respectively. At O/F = 8.0, the Isp was 360 lbf-sec/lbm, as predicted.

17. Key Words (Suggested by Author(s))
Rockets, Space Station, hydrogen/oxygen,
regenerative, high-performance, long-life

18. Distribution Statement
Unclassified Unlimited
Subject Category 20

| 19. Security Classif. (of this report) | 20. Security Classif. (of this page) | 21. No. of pages | 22. Price |
|---|---|---|---|
| Unclassified | Unclassified | 172 | A05 |

NASA FORM 1626 OCT 86

## I. SUMMARY

The objective of the program documented herein was to establish a technical data base to support future development of $GO_2/GH_2$ flight thrusters for a Space Station Auxiliary Propulsion System. Specific issues of concern were thruster performance and cycle life. To address these issues, NASA funded Aerojet to design, fabricate and altitude test two 25-lbf $GO_2/GH_2$ thrusters. The first thruster was designed to operate at a nominal mixture ratio (O/F) of 4.0, and expansion area ratio ($\varepsilon$) of 100:1. It was tested over a range of O/F from 2.0 to 8.0, achieving a range of specific impulse ($I_{sp}$) from 440 to 310 lbf-sec/lbm. The second thruster was optimized for a nominal O/F of 8.0 at a lower nozzle expansion area ratio $\varepsilon$ of 30:1. This second thruster was tested over an O/F range of 3.0 to 9.5, achieving an $I_{sp}$ range of 416 to 332 lbf-sec/lbm, respectively. At O/F = 8.0, the $I_{sp}$ was 360 lbf-sec/lbm, as predicted.

## II. INTRODUCTION

The development of the Space Shuttle has made it possible to develop a Space Station. Such a Space Station requires an onboard auxiliary propulsion system (APS) to provide for vehicle reboost, attitude control, and docking and avoidance maneuvers. A key component of this onboard APS is the thruster design. To develop the required thruster technology base to support the Space Station Project, the National Aeronautics and Space Administration (NASA) Lewis Research Center (LeRC) has sponsored a development program under Contract No. NAS 3-24398. During this NASA LeRC sponsored program, two similar, yet distinct, 25-lbf gaseous oxygen/hydrogen ($GO_2/GH_2$) thrusters have been designed, fabricated and altitude tested to provide the necessary technology base for the future design of the Space Station APS thrusters.

The initial thruster was designed for operation at a nominal mixture ratio (O/F) of 4.0. This mixture ratio provided the maximum theoretical specific impulse, as indicated in Figure 1. Design requirements for this initial thruster, designated Thruster No. 1, are provided in Table I. During the course of the analysis, design and fabrication of Thruster No. 1, the Space Station propulsion requirements evolved. Specifically, the operating mixture ratio changed from 4.0 to 8.0, which was consistent with water electrolysis, the proposed method of generating the onboard $GO_2/GH_2$ propellants. Thruster No. 1 was completed as originally designed to meet the requirements of Table I; however, during the testing phase, the hot-fire mixture ratio range was extended from 3-5 to 2-8, to be responsive to the evolved requirements. The performance at the higher O/F values was not optimum, because those values lay in an off-design regime.

To evaluate a thruster optimized at an O/F of 8.0, NASA LeRC funded a redesign of the 25 lbf thruster, specifically the injector. The results of the test data evaluation from Thruster No. 1 were used to calibrate the thermal and hydraulic models utilized in the redesign effort. The new requirements, as given in Table II, were established by NASA LeRC. This redesigned thruster, designated Thruster No. 2, was fabricated and altitude tested, yielding excellent results and confirming the design and analysis methodology employed.

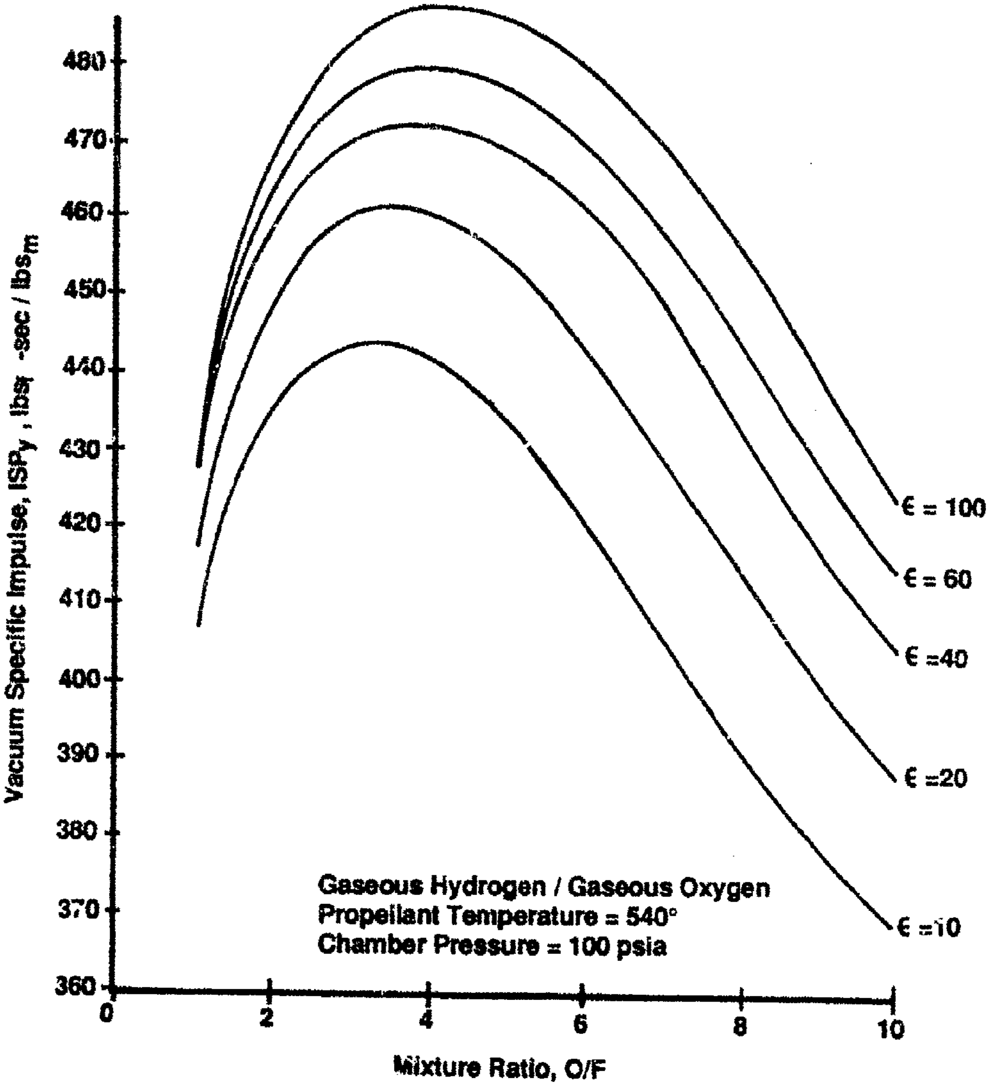

Figure 1. Vacuum Specific Impulse vs. Mixture Ratio ($P_c$ = 100 psia)

## TABLE I

## DESIGN REQUIREMENTS FOR THRUSTER NO. 1

| | |
|---|---|
| Propellants | $GO_2/GH_2$ |
| Mixture Ratio, O/F | 4.0 ± 1.0 |
| Specific Impulse, ISP | $\geq$ 400 lbf-sec/lbm |
| Fuel Inlet Temperature, TFI | 200° - 530°R |
| Oxidizer Inlet Temperature, TOI | 300° - 530°R |
| Total Impulse, $I_{tot}$ | 2.0 x $10^6$ lbf-sec |
| Minimum Impulse Bit, $I_{bit}$ | 2.0 lbf-sec |

## TABLE II

## DESIGN REQUIREMENTS FOR THRUSTER NO. 2

| | |
|---|---|
| Propellants | $GO_2/GH_2$ |
| Mixture Ratio, O/F | 8.0 |
| Thrust, F | 25.0 lbf |
| Specific Impulse, ISP | 346 lbf-sec/lbm* |
| Fuel Inlet Temperature, TFI | 200° - 530°R |
| Oxidizer Inlet Temperature, TOI | 300° - 530°R |
| Total Impulse, $I_{tot}$ | $6.0 \times 10^6$ lbf-sec |
| Minimum Impulse Bit, $I_{bit}$ | 2.0 lbf-sec |
| Throttling, % of Nominal $P_c$ | 50% - 125% |

*Minimum specific impulse (Isp) required for an expansion area ratio ($\varepsilon$) of 30:1. An Isp of 346 lbf-sec/lbm at $\varepsilon = 30$ would ensure an Isp of 380 lbf-sec/lbm at $\varepsilon = 100$.

# III. SPACE STATION THRUSTER NO. 1

## A. DESIGN APPROACH

### 1. Design Background

Several programs[1,2,3] conducted by Aerojet for NASA in the early 1970's provided the basis for the current thruster design, namely a proven spark torch igniter. This igniter concept utilized two-stage ignition, as shown in Figure 2. The first stage injected a small portion (10%) of the fuel into all of the oxidizer that flowed around the spark plug tip and ignited at Point ① of Figure 2. This oxidizer-rich (O/F = 50) mixture flowed down the center (Point ②) of a sleeve insert which was regeneratively cooled with the remaining (90%) of the fuel. At Point ③, the balance of the fuel was injected into the oxidizer-rich core, resulting in a fuel-rich (O/F = 2.0) torch at Point ④ which, in turn, ignited the main injector. This igniter design was demonstrated with $GO_2/GH_2$ in more than 100,000 firings over a mixture ratio range of 2 to about 250 and inlet temperatures from normal boiling point to ambient.

Aerojet suspected that the igniter, used in these programs involving larger thrusters, could be operated continuously with a small regeneratively cooled chamber to meet the requirements of a small (25-lbf) $O_2/H_2$ thruster. This concept was designated the integral igniter injector with regeneratively cooled thrust chamber, i.e., $I^3$-Regen, and was demonstrated in a program in the early 1980's. A residual igniter from the 1970's programs was used as the injector for both radiation and regeneratively cooled thrusters developed by Aerojet in a program[4] sponsored by the Jet Propulsion Laboratory (JPL). The JPL test results served as the starting point for the NASA LeRC Space Station thruster design.

### 2. Design Concept

The assembly for Thruster No. 1, as shown in the cutaway of Figure 3, consists of a combination (integral) igniter injector, a regeneratively cooled thrust chamber, fuel balancing orifices and a sleeve insert at the chamber forward end. Integral, directly-actuated poppet-type valves control the flow of propellants to the thruster. Fuel is first used to regeneratively cool the thrust chamber, flowing counter to the combustion gases. As the fuel exits the chamber coolant channels at the forward end, it is collected in an annular manifold formed at the interface between the integral igniter injector and the thrust chamber. This annular manifold feeds two sets of radial flow passages. One set of passages supplies hydrogen to the injector where it impinges radially on the axial flow of spark-energized oxygen, causing ignition in the

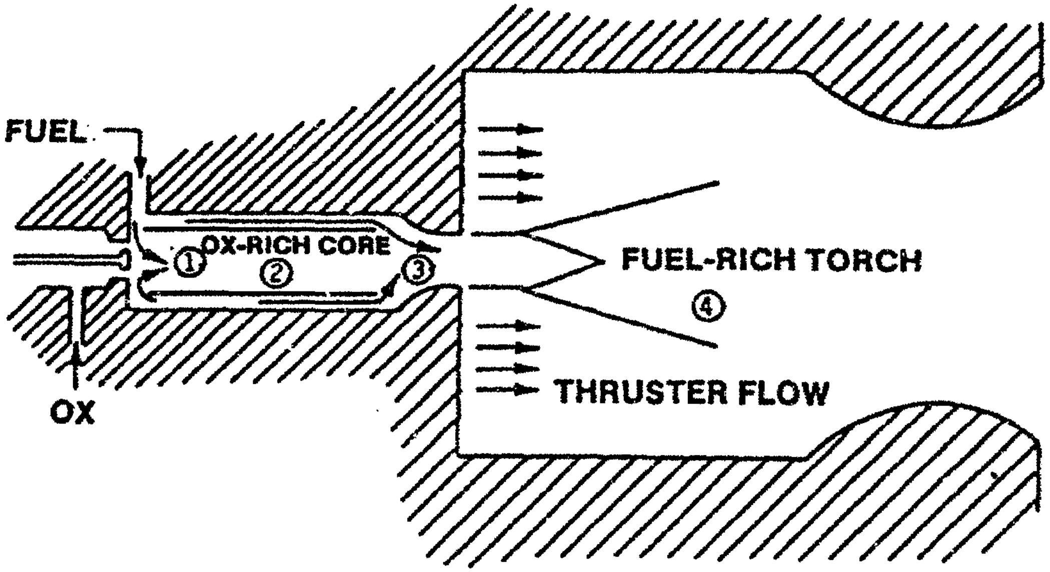

Figure 2. Proven Spark Torch Igniter Concept

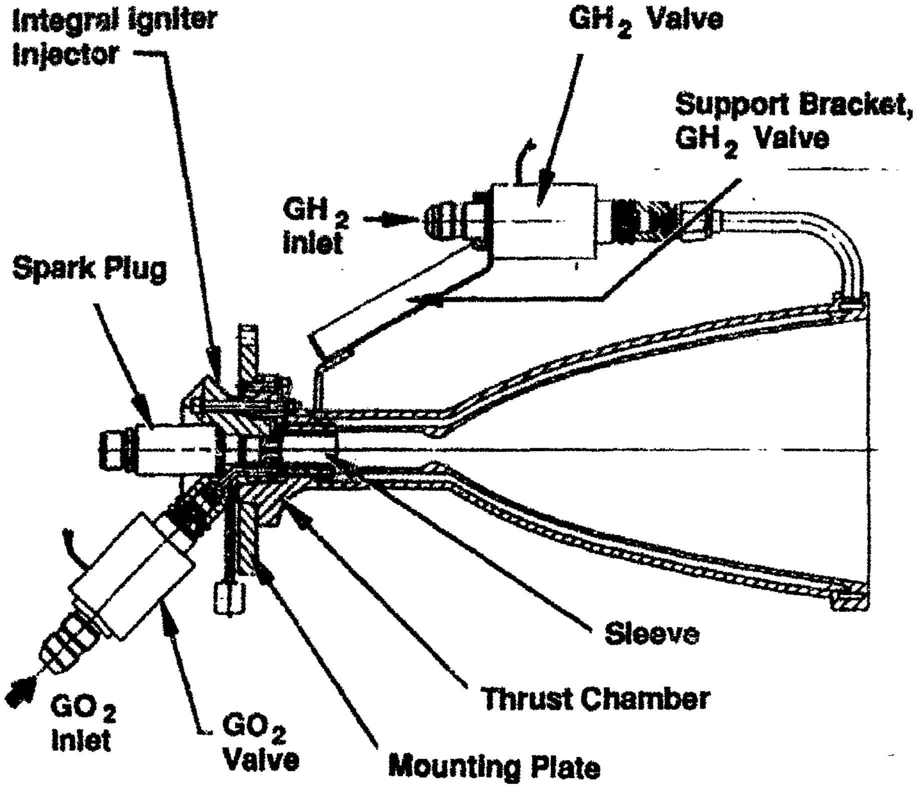

Figure 3. Cutaway of Thruster No.1 Assembly

oxidizer-rich core. For an overall mixture ratio of four (4.0), the core O/F is 16.0. The second set of radial flow passages meters the remainder of the hydrogen into axially-slotted passages on the outer surface of the sleeve insert. This hydrogen is injected axially as film or barrier cooling along the inner wall of the thrust chamber. The film coolant and injector core streams progressively mix as the core flow is entrained into the film coolant stream, achieving the nominal overall O/F of 4.0.

### 3. Design Point

The design point for Thruster No. 1, based on the original contract requirements, is presented in Table III. Evolution of the Space Station APS requirements to be synergistic with water electrolysis occurred subsequent to the establishment and implementation of this design point.

## B. DESIGN ANALYSIS

### 1. Ignition Analysis

An extensive data base and analytical/design capability have been established for spark-initiated igniters highlighted by the curves in Figures 4, 5, and 6[1,2]. These curves define the ignition/no ignition boundaries for high pressure, low pressure, and minimum energy limits, as illustrated in Figure 7. Based on this extensive data base, the spark igniter operating characteristics for Thruster No. 1 are as indicated in Table IV.

### 2. Thermal Analysis

Optimum thruster performance occurred with 60 percent fuel film cooling (FFC), as indicated by the JPL performance data of Figure 8; however, since the thruster sleeve cooling was predicted to be marginal at 60 percent fuel film cooling, 75 percent fuel film cooling was selected for the thruster baseline design.

A thermal model of the thruster was developed with the computer code HOCOOL[6,7] which was used for determining coolant requirements and for predicting thermal response of rocket thrust chambers, specifically those with hydrogen film and regenerative cooling. HOCOOL required the input of two empirical constants: the heat transfer correlation

# TABLE III

## THRUSTER NO. 1 DESIGN POINT

| | |
|---|---|
| Thrust, F-lbf | 25 |
| Chamber Pressure, Pc-psia | 75 |
| % FFC | 75 |
| Overall Mixture Ratio, MR | 4.0 ± 1.0 |
| Core Mixture Ratio, $MR_{core}$ | 16.0 ± 4.0 |
| Fuel Inlet Temperature, TFI-°R | 200 - 530 |
| Oxidizer Inlet Temperature, TOI-°R | 300 - 530 |
| Throat Diameter, $D_T$-in. | .500 |
| Chamber Diameter, $D_C$-in. | .750 |
| Contraction Area Ratio, $\varepsilon_c$ | 2.25 |
| Expansion Area Ratio, $\varepsilon$ | 100 |
| Chamber Length, L', in. | 1.925 |

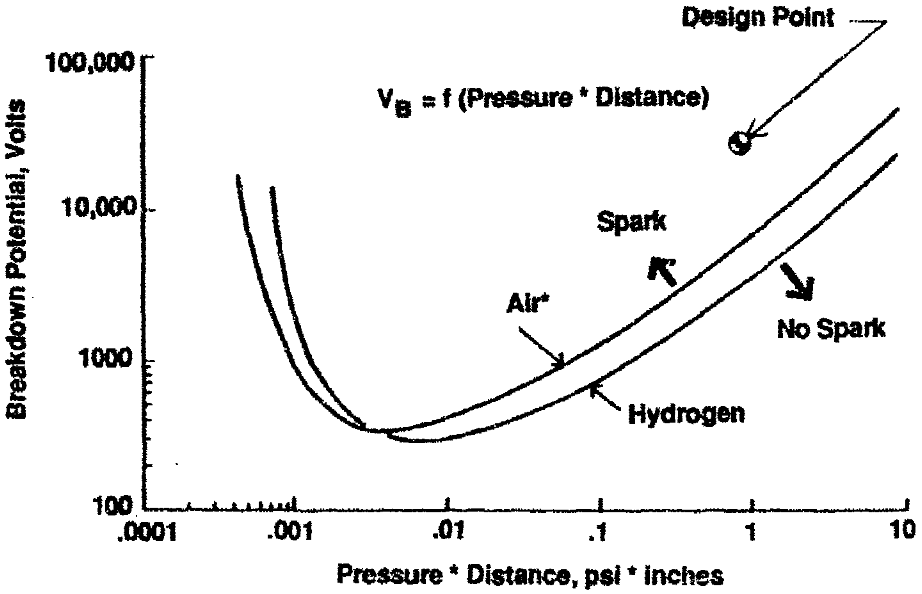

*Air is assumed to Behave Like Oxygen

Figure 4. Paschen's Law Curve for Air*

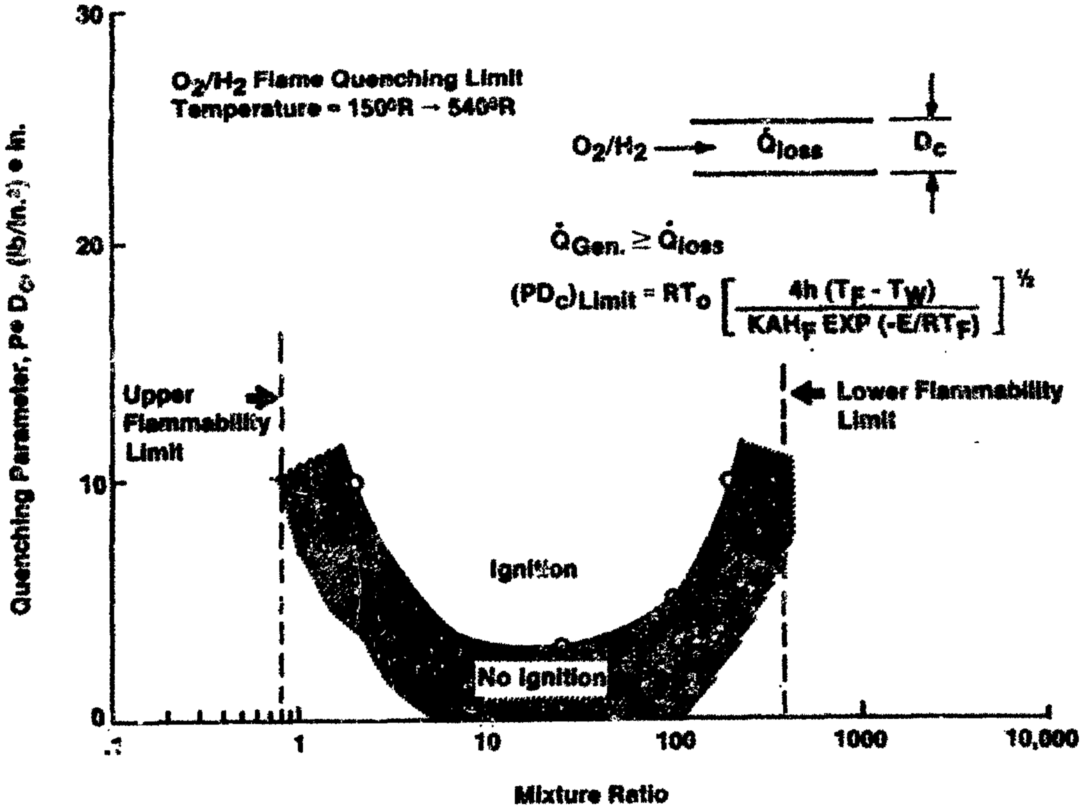

Figure 5. Flame Quenching Limit for $O_2$ /$H_2$

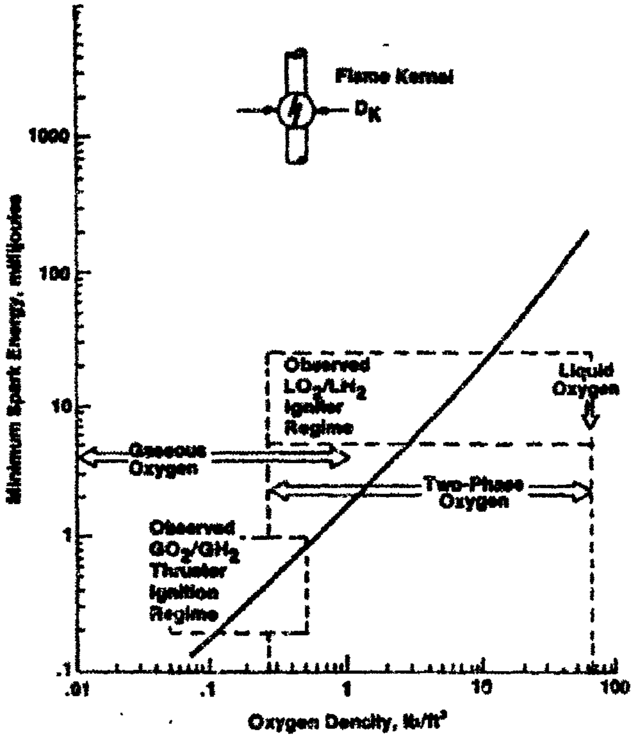

Figure 6. Minimum Spark Energy Requirements for $O_2/H_2$ Propellants

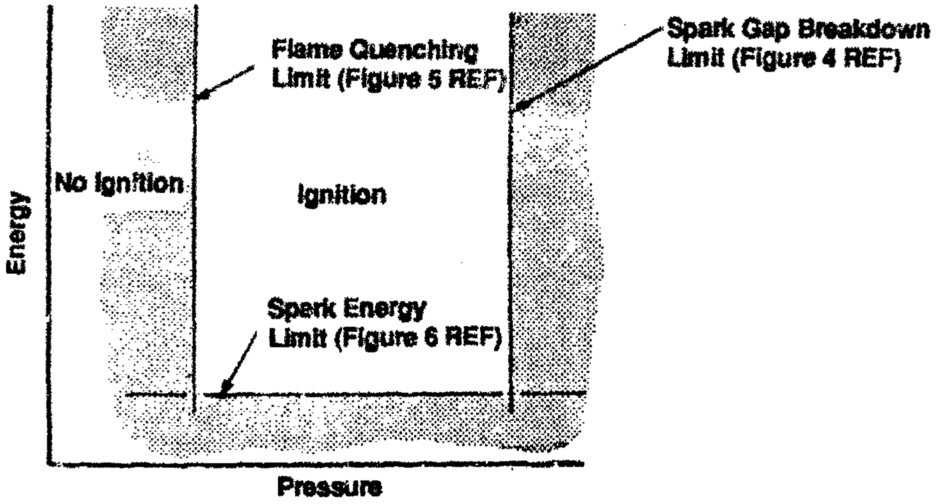

Figure 7. Spark Ignition limits: High Pressure, Low Pressure, Minimum Energy Limits

## TABLE IV

## SPACE STATION THRUSTER NO. 1
## SPARK IGNITER OPERATING CHARACTERISTICS

| | |
|---|---|
| Spark Igniter Energy, mJ | 10 min |
| Spark Rate, SPS (Hz) | 300 |
| Spark Gap, in. | 0.050 |
| Igniter Sleeve I.D., in. | 0.575 |
| Breakdown Potential, Volts | 30,000 min. |
| Minimum Ignition Pressure, psia | 9 |
| Maximum Ignition Pressure, psia | 110 |
| Predicted Nominal Cold Flow Pressure, psia | 22 |

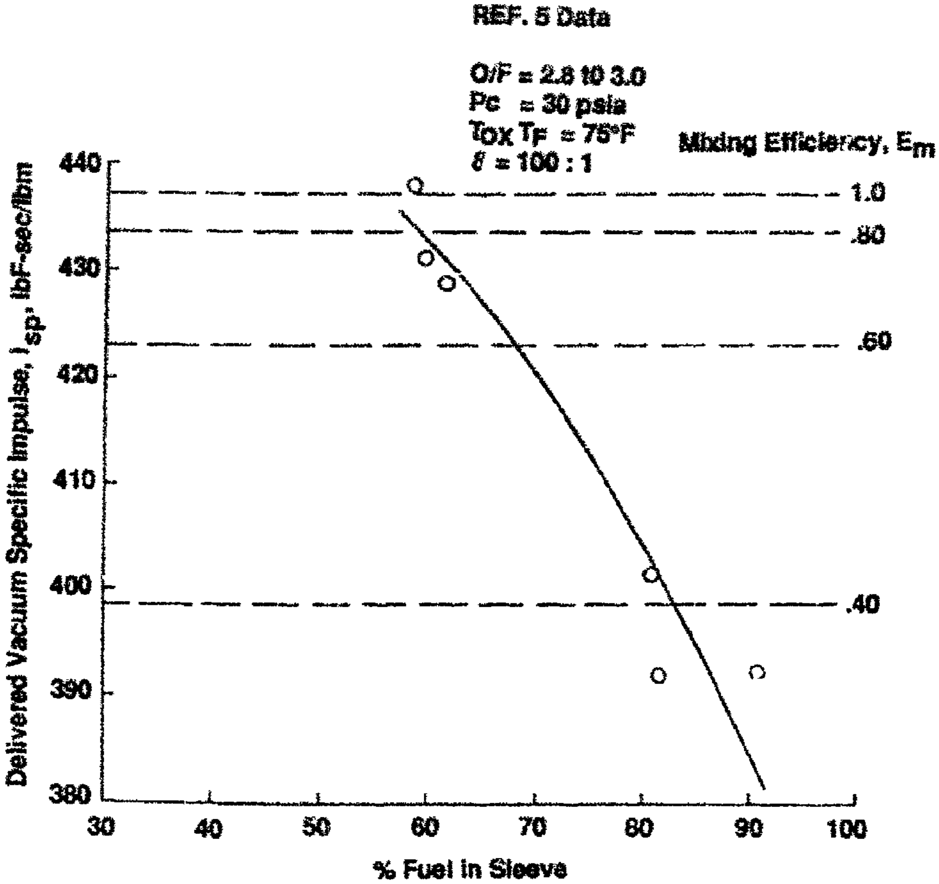

Figure 8. Experimentally Determined Effect of Fuel Film Coolant on Specific Impulse and Mixing Efficiency

coefficient, $Cg_n$, and the entrainment fraction, KSO. The first constant, $Cg_n$, modified the classical Bartz heat transfer coefficient to account for flow acceleration effects and injector characteristics on chamber heat transfer.

The entrainment model of HOCOOL utilized a two stream tube mixing model. In this model, the core gases from the main injector were considered to be entrained by and to mix with the film coolant. This mixing layer comprised one of the stream tubes. The other stream tube was the mixed oxidizer-rich core of combustion gases. The rate of entrainment of the core gases into the mixing layer was defined by the entrainment fraction, KSO.

The $Cg_n$ profile and the entrainment fraction were based on the JPL thruster test program. During this program, a thin-walled 100:1 area ratio rhenium thruster was fired over a range of chamber pressure from 30 to 190 psia and mixture ratios from 2.0 to 3.4. Analysis of thermocouple data defined the $Cg_n$ and the adiabatic wall temperature profiles, the latter of which determines the entrainment fraction.

### a. $Cg_n$ and Adiabatic Wall Temperature Profiles

By performing transient wall analyses with a one-dimensional heat conduction code, thermocouple transients from the test data were matched to determine heat transfer coefficients and adiabatic wall temperatures. Figure 9 presents a typical match between the transient data and computer code calculations. Very good agreement was obtained. The heat transfer coefficient s determined with the conduction code have been correlated to the Bartz coefficient for non-reactive turbulent flow. The convergent section $Cg_n$ profile resulting from this correlation is shown in Figure 10.

Possible flow relaminarization in the convergent section may reduce the heat transfer coefficient due to the different functional dependence on Reynolds number as shown in Figure 11. The turbulent correlation was used for design purposes, thus providing a potential 30% design margin.

### b. Entrainment Fraction

The entrainment fraction was inferred from the adiabatic wall temperature profiles. A typical comparison of the empirical adiabatic wall temperatures with HOCOOL calculations is shown in Figure 12. HOCOOL very accurately predicted the throat adiabatic wall

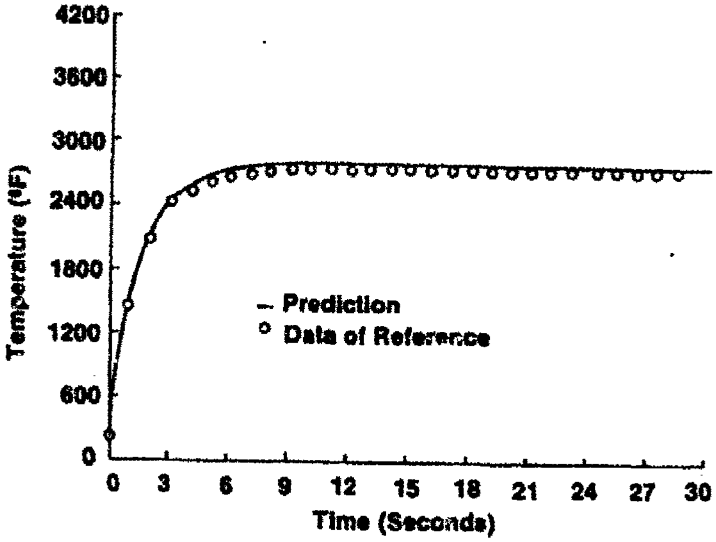

Figure 9. Typical Fit of Reference 5 Thermocouple Data with Conduction Code Prediction

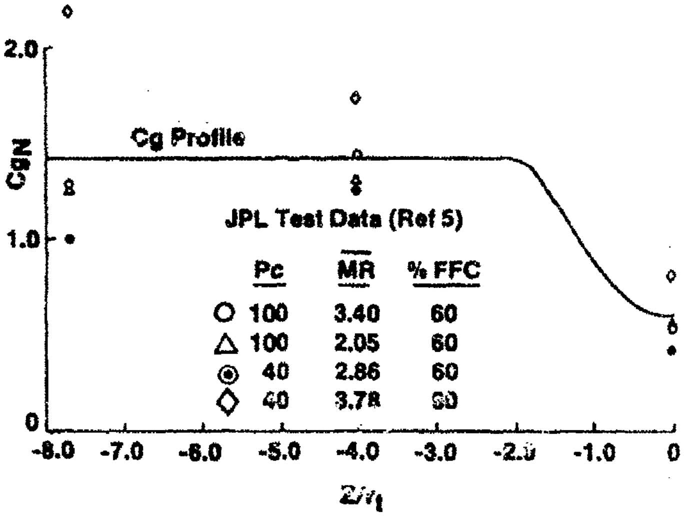

Figure 10. Space Station Thruster Convergent Section Cg Profile

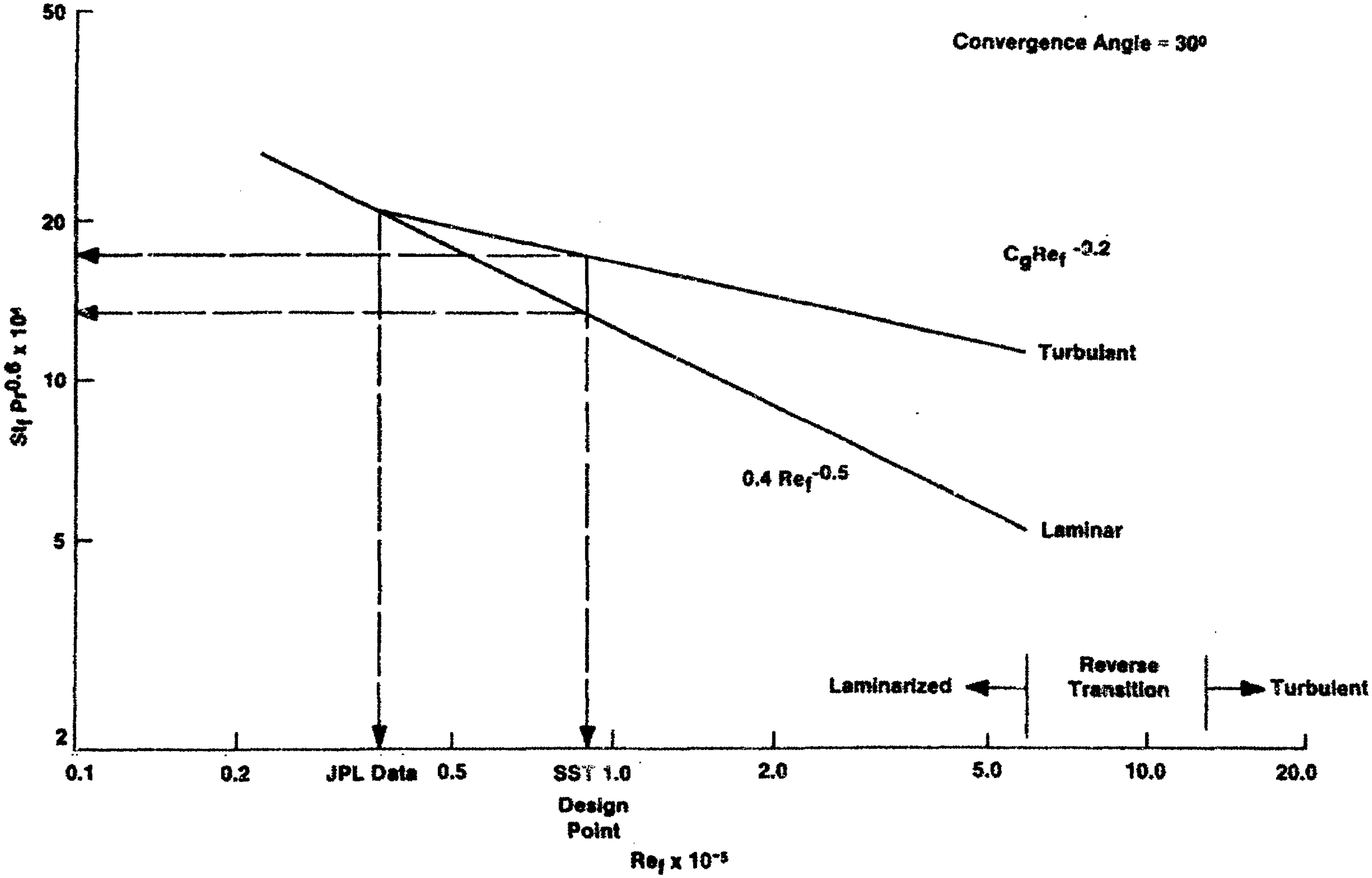

Figure 11. Comparison of Throat Heat Transfer with Turbulent and Laminar Correlations

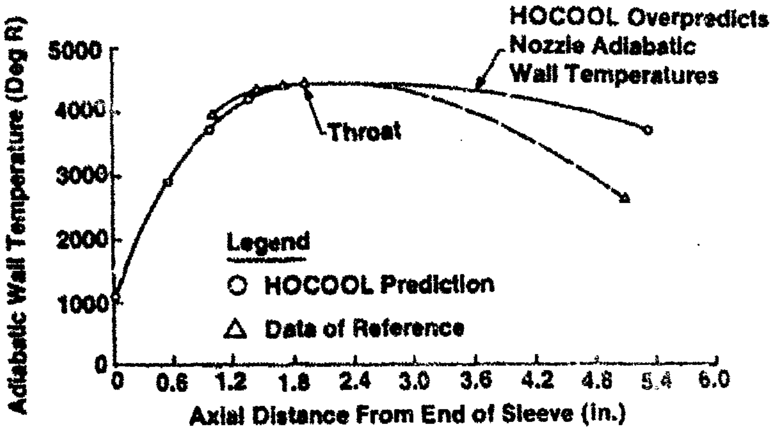

Figure 12. Comparison of Reference 5 Thruster Adiabatic Wall Temperature Profile with HOCOOL Prediction

temperature but somewhat over-predicted divergent nozzle temperatures. Appropriate modifications were made to the latter for design purposes.

### 3. Performance Analysis

Combustion performance of $GO_2/GH_2$ was evaluated parametrically over broad ranges of design points and operating conditions using the TDK and TBL computer programs[8,9] The results of these parametric studies were incorporated into a performance prediction model called ROCKET. To account for the impact of incomplete mixing, ROCKET utilized a mixing efficiency parameter, Em,[10] which is defined for the simplified two stream tube flow characterization as follows:

$$E_m = \left\{1 - X_o\left[\frac{(O/F)_o - (O/F)}{1 + (O/F)_o}\right] - X_F\left[\frac{(O/F) - (O/F)_f}{(O/F)[1 + (O/F)_f]}\right]\right\}$$

where:

$(O/F)_o$ = mixture ratio of oxidizer-rich stream tube
$(O/F)_f$ = mixture ratio of fuel-rich stream tube
$X_o$ = mass fraction of oxidizer-rich stream tube
$X_f$ = mass fraction of fuel-rich stream tube

Performance predictions were based on thermal analysis of the JPL test data which characterizes the mixing between the core and the film coolant streams in terms of Em values. Subsequent analysis using ROCKET and these $E_m$ values determined the predicted specific impulse ($I_{sp}$) for the various operating points being evaluated. Figures 13 and 14 show the predicted $E_m$ and $I_{sp}$ values, respectively, as a function of overall mixture ratio. The predicted values in these two figures were for an injector energy release efficiency (ERE) of 100 percent, i.e., a perfect injector.

### 4. Chamber Life Analysis

The 2.0 x $10^6$ lbf-sec impulse requirement equates to a total firing duration of 22.2 hours at a thrust of 25 lbf. During the 10-year design life, the actual duty cycle is expected to comprise about 500 deep thermal cycles and perhaps 100,000 impulse bits. The thruster will easily meet these requirements. The cycle life estimate is based on the Manson-Halford method of universal slopes.[11] The thermal strain in the chamber wall is determined at the point of

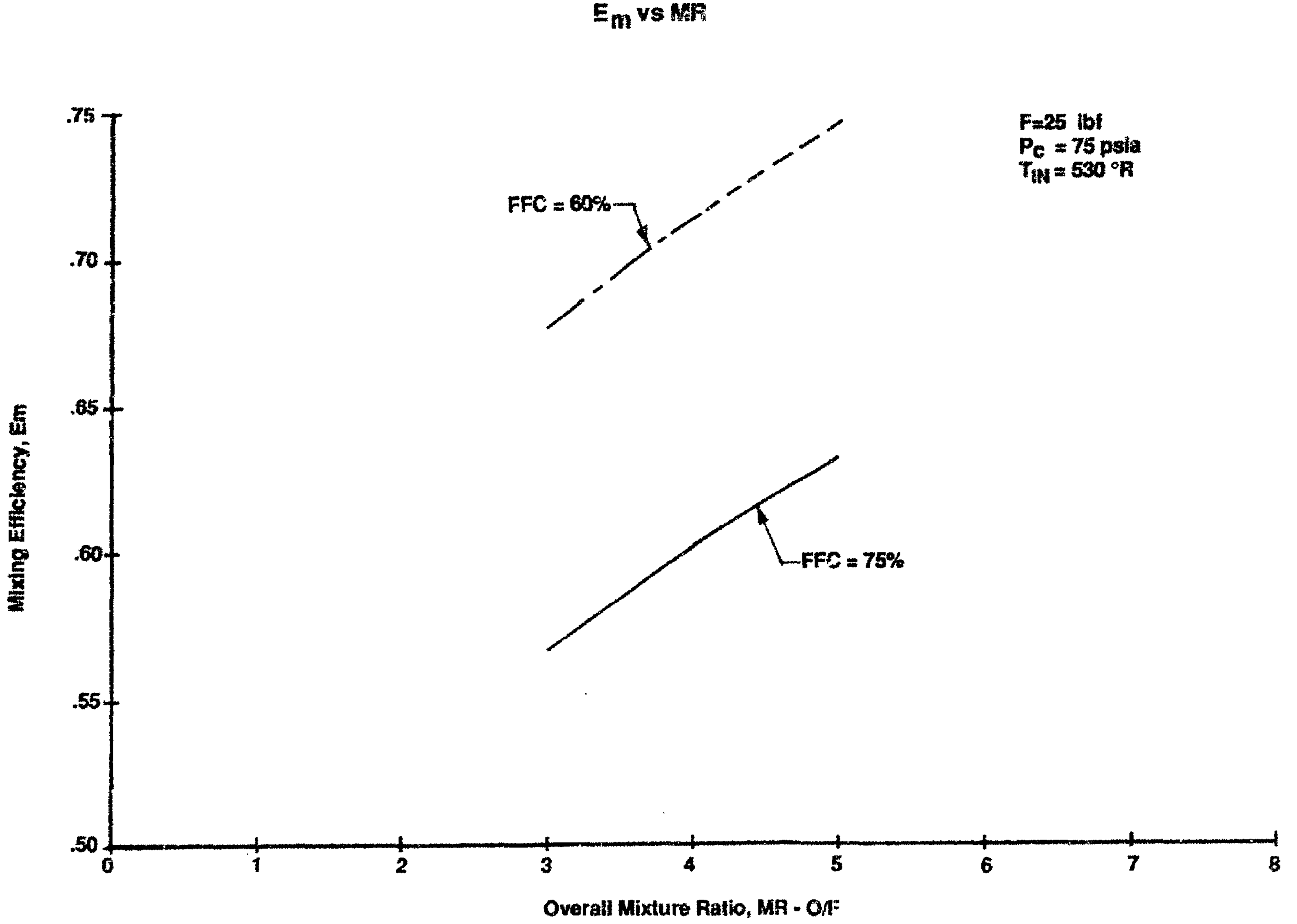

Figure 13. Predicted Mixing Efficiency, $E_m$ , for Overall Mixture Ratio

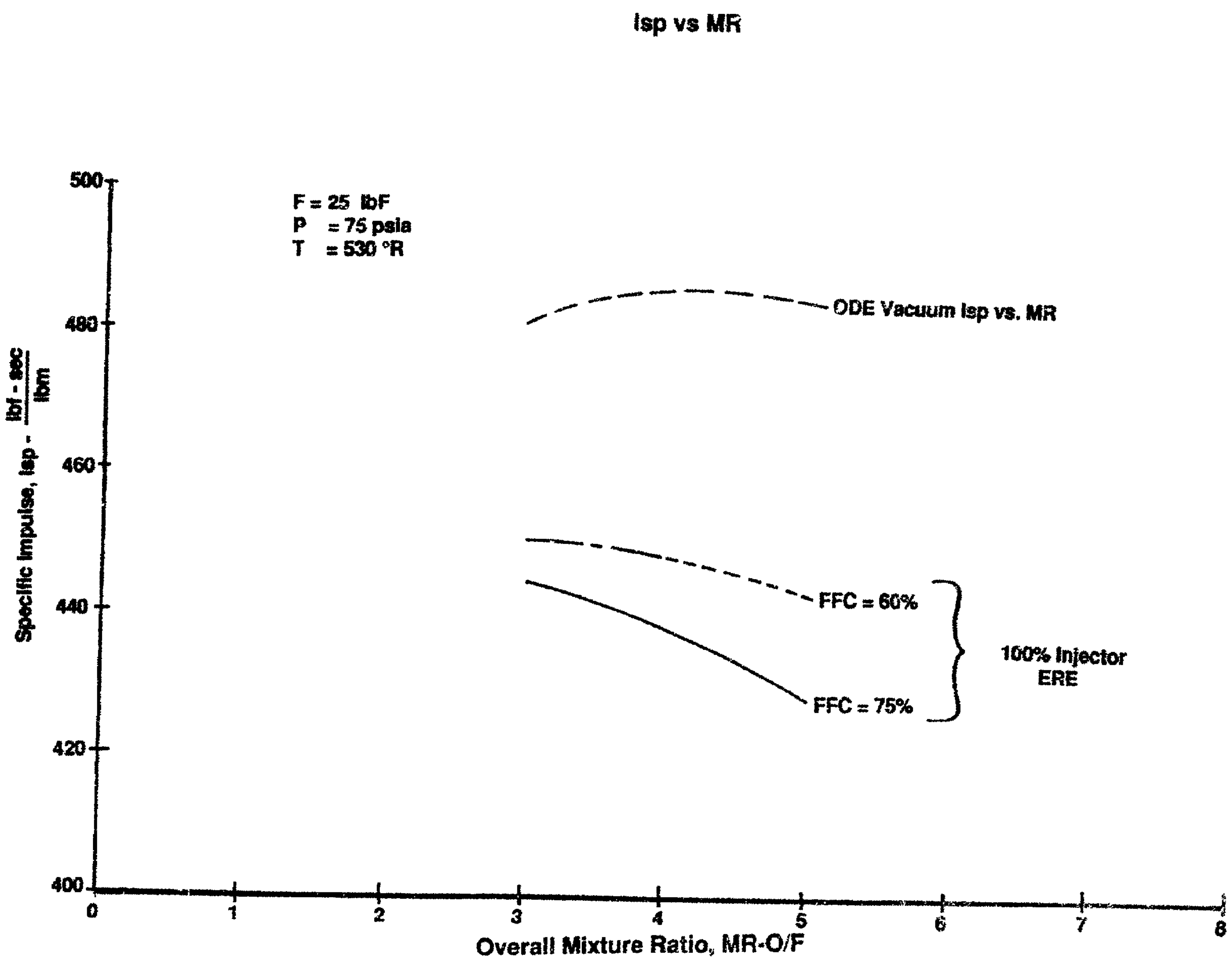

Figure 14. Predicted Perform e For Overall Mixture Ratio

maximum gas side temperature, using finite element thermal and structural models. The calculated strain range is used, as shown in Figure 15, to obtain the predicted cycle life for a given temperature and time at temperature.

Chamber life for the thruster has been estimated to exceed 500 deep thermal cycles. About seventy deep thermal cycles have been demonstrated in test. Based on wall temperatures being lower than predicted, the updated life prediction is about 2000 deep thermal cycles. Impulse bit capability is effectively infinite because very little thermal strain is developed during short firings.

## C. DESIGN DESCRIPTION AND FABRICATION

The thruster design consists of three major components: the thrust chamber, the sleeve insert, and the integral igniter injector. The thrust chamber is made of an axially slotted zirconium-copper liner that has an electroformed nickel (EFNi) outer jacket. The EFNi jacket closes out the 24 chamber coolant channels and provides structural support for the copper liner. The diverging section of the chamber is an optimized Rao contour with a potential flow expansion area ratio of 100:1. Figure 16 shows the machined chamber liner and Figure 17 shows the completed thrust chamber.

The sleeve insert, shown in Figure 18, is designed to fit into the forward end of the thrust chamber. Flow-balancing orifices divide the hydrogen flow, which exits the chamber coolant channels between the injector and the sleeve. The sleeve is made of nickel (Ni-200) and has 18 axial slots cut into the outer diameter for regenerative cooling and axial injection.

The integral igniter injector consists of a machined stainless steel igniter body and a nickel (Ni-200) platelet injector. Propellant distribution and metering occur within the photoetched flow passages of the individual injector platelets. These individual platelets are diffusion-bonded to form a homogeneous structure which becomes the injector. The injector is brazed to the igniter body to complete the assembly. Provisions are made within the igniter body to mount the spark plug, the chamber pressure transducer and the oxidizer valve. Both propellant valves mount directly onto the thruster. Figure 3 shows a cutaway of the thruster assembly with all of the thruster components identified.

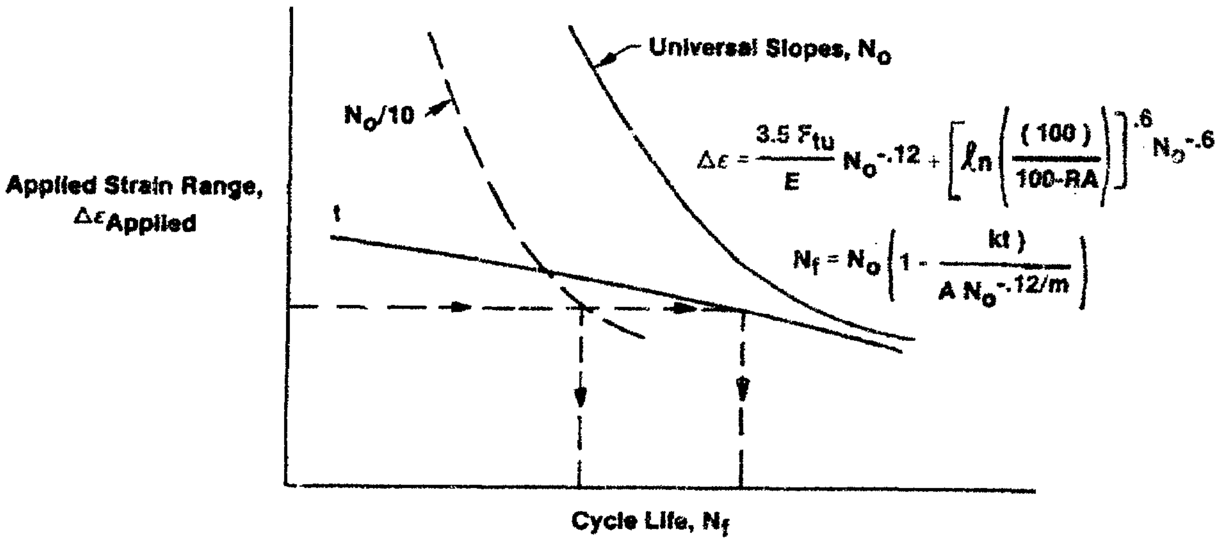

Enter Curve at $\Delta\varepsilon_{Applied}$ and Define $N_f$ as Minimum $N_f$ from Cumulative Time Curve, t, or $N_o/10$, whichever is Less.

Figure 15. Manson-Halford Method of Universal Slopes for Low Cycle Fatigue

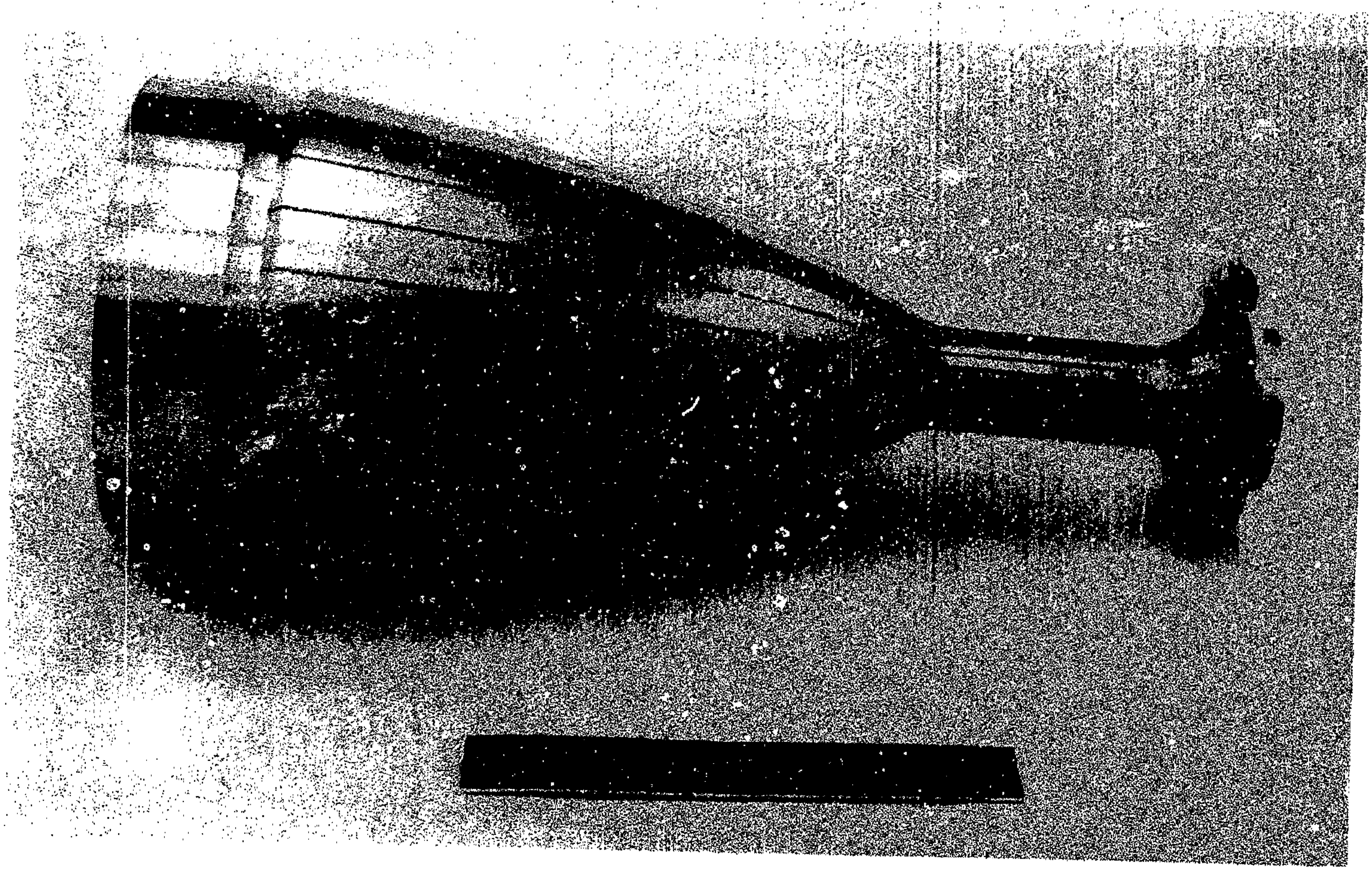

C1185 2790

Figure 16. Machined ZrCu Chamber Liner - Thruster No. 1

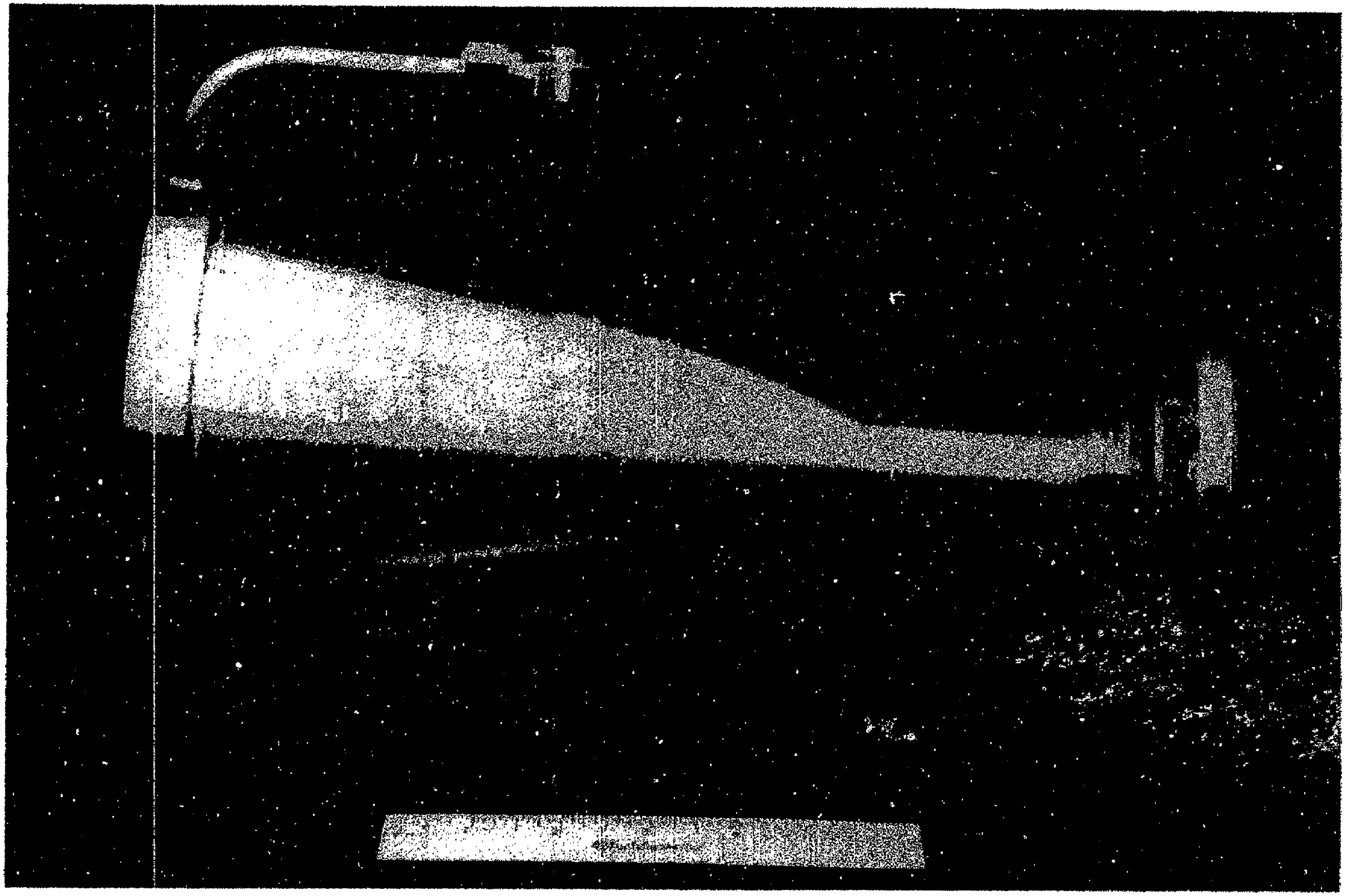

Figure 17.  Completed Chamber Assembly - Thruster No. 1

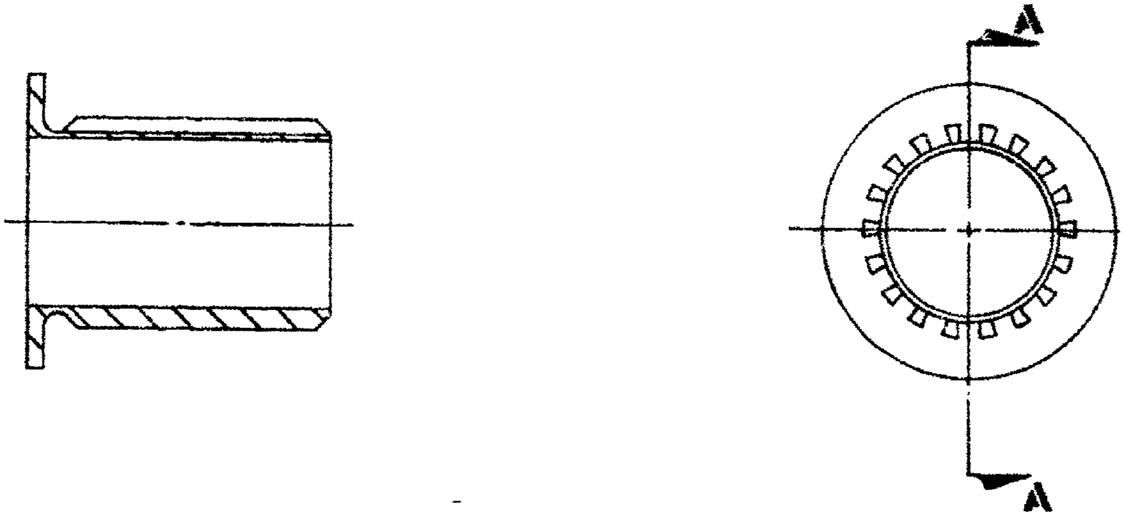

SECTION A~A

Figure 18. Sleeve Insert

## D. TEST

### 1. Test Setup

The space station thruster was tested in the altitude test facility shown in Figure 19, which was equipped with a hardware test cell, an 11,000 cubic foot altitude chamber, and the necessary auxiliary instrumentation, controls, and data recording equipment. The thruster hardware mounted to a test stand designed to measure thrust, as shown in Figure 20. The thruster and stand were installed as a subassembly into the test cell, as shown in Figure 21, where the thruster nozzle was positioned to exhaust into a water-cooled diffuser linking the test cell with the altitude chamber. The diffuser maintained required cell pressure, and ensured that the thruster nozzle flowed full. Propellant supply lines were plumbed to the test cell from a standard $GH_2$ trailer and a 50 cubic foot, 6000 psi facility gaseous oxygen supply.

The altitude chamber was equipped with two two-stage pump units, each unit being composed of a first-stage reciprocating pump and a second-stage blower. These two units could pump at a combined rate of 4800 CFM to maintain a simulated altitude of 100,000 to 130,000 feet at a maximum continuous thrust of 25 lbf.

### 2. Instrumentation

The thruster test assembly was instrumented to measure thrust, propellant flowrates, inlet pressures and temperatures, coolant bulk temperature rise, thrust chamber pressure and chamber backside wall temperatures. There were 16 backside thermocouples, located in two rows located 180 degrees apart, the rows being designated "A" and "B." Each row had a thermocouple positioned at eight axial stations along the chamber, thus providing a temperature measurement (A or B) at each axial station, i.e., Station 1, Station 2, ... etc. These axial stations were located according to Figure 22, while the test instrumentation is summarized in Table V.

### 3. Test Summary

Thruster No. 1 was tested extensively, covering a broad range of mixture ratio (O/F) and percentage fuel film cooling (FFC). Tables VI and VII provide a summary of tests run with regard to O/F and percent FFC, respectively. The thruster was tested from an O/F of 2.2 to 8.1, far exceeding the design range of 3.0 to 5.0. Furthermore, testing covered percent FFC from

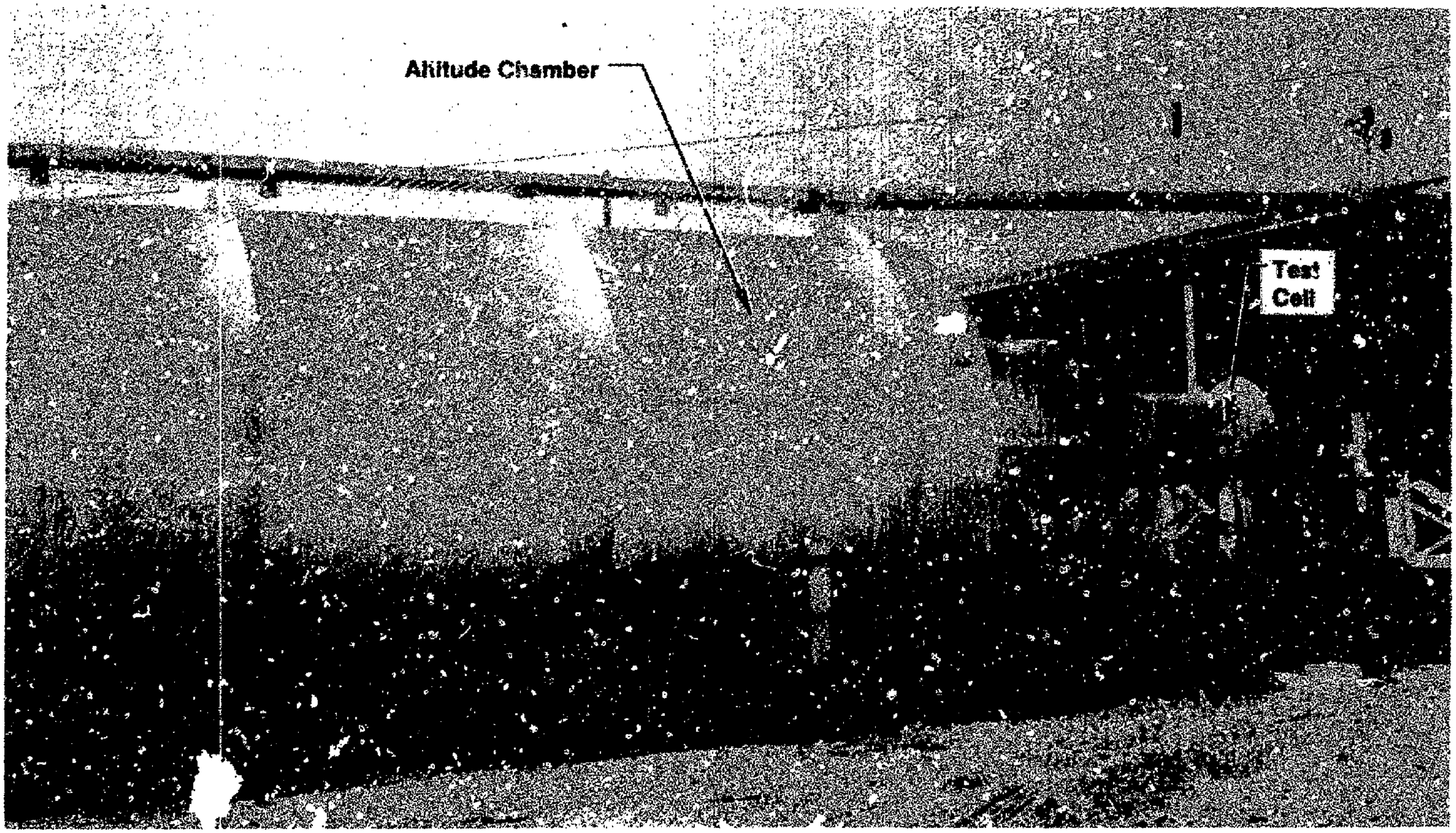

Figure 19. Aerojet Altitude Test Facility for Small Thrusters

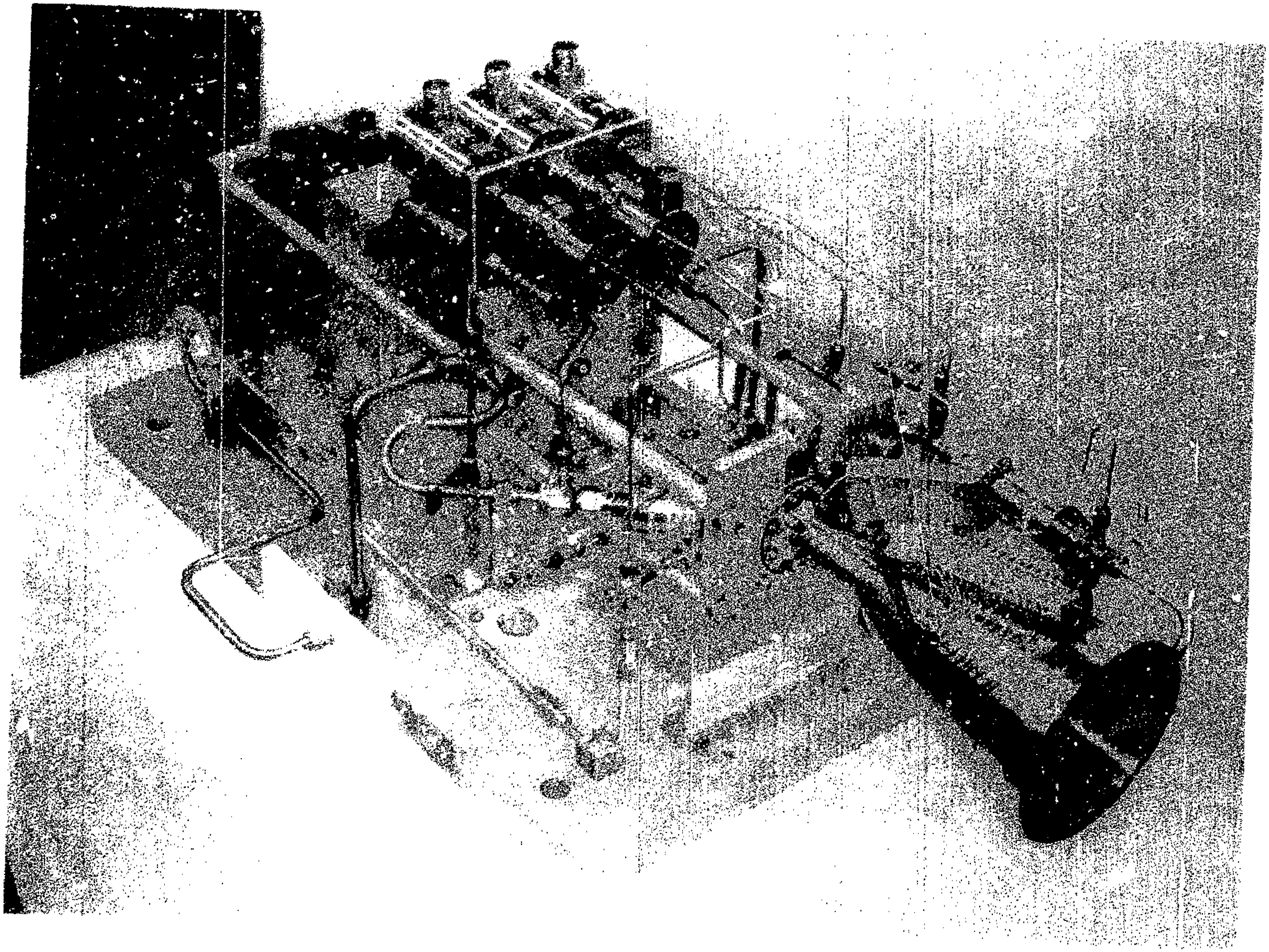

Figure 20. Thruster Mounted to the Thrust Measuring Test Stand

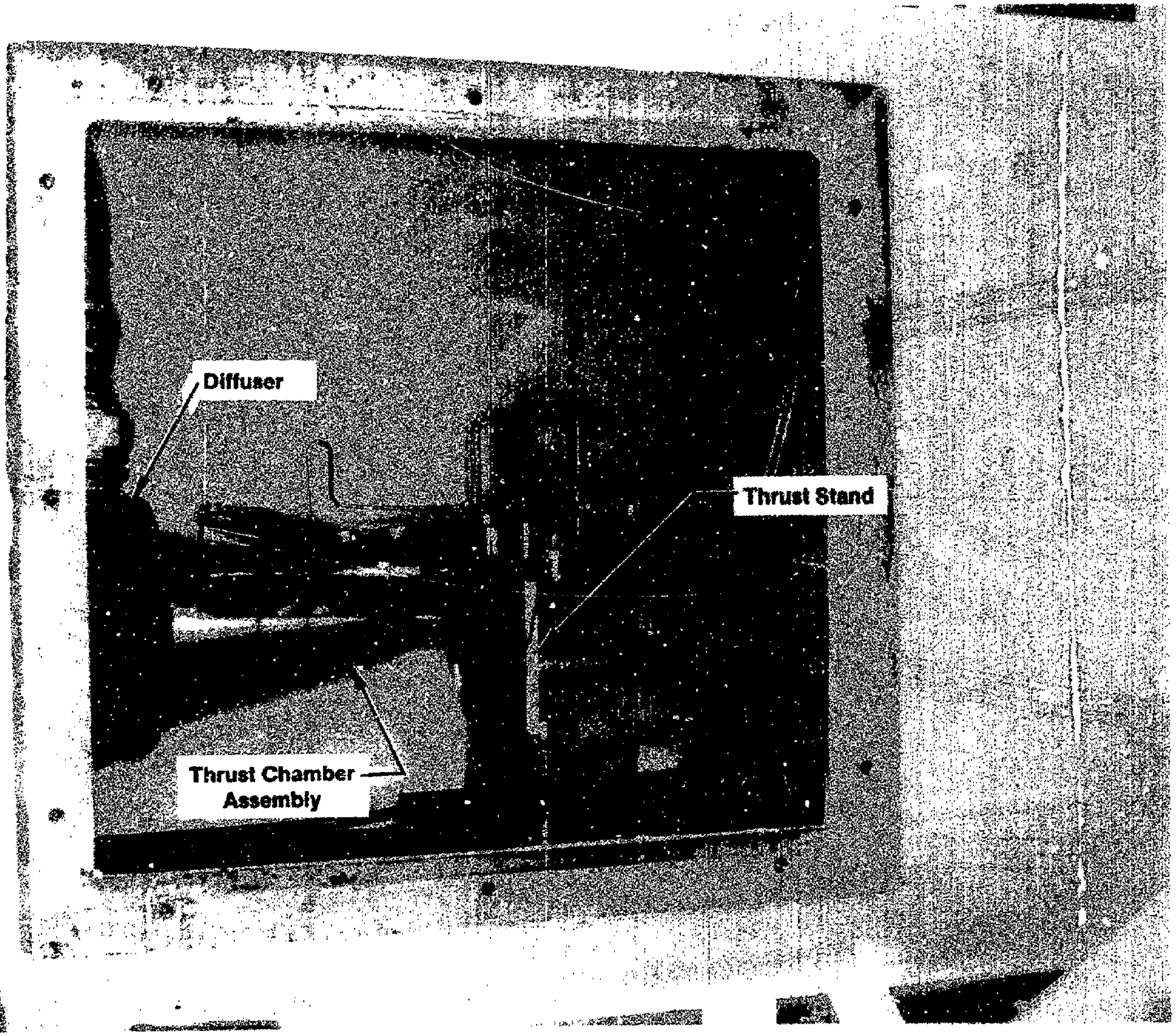

Figure 21. Test Cell with Mounted Test Stand

| TC | x (in.) | z (in.) |
|---|---|---|
| TCA 1, TCB 1 | 1.10 | -2.50 |
| TCA 2, TCB 2 | 1.68 | -1.92 |
| TCA 3, TCB 3 | 2.50 | -1.10 |
| TCA 4, TCB 4 | 3.25 | -0.35 |
| TCA 5, TCB 5 | 3.60 | 0 |
| TCA 6, TCB 6 | 5.90 | 2.30 |
| TCA 7, TCB 7 | 8.30 | 4.70 |
| TCA 8, TCB 8 | 10.65 | 7.05 |

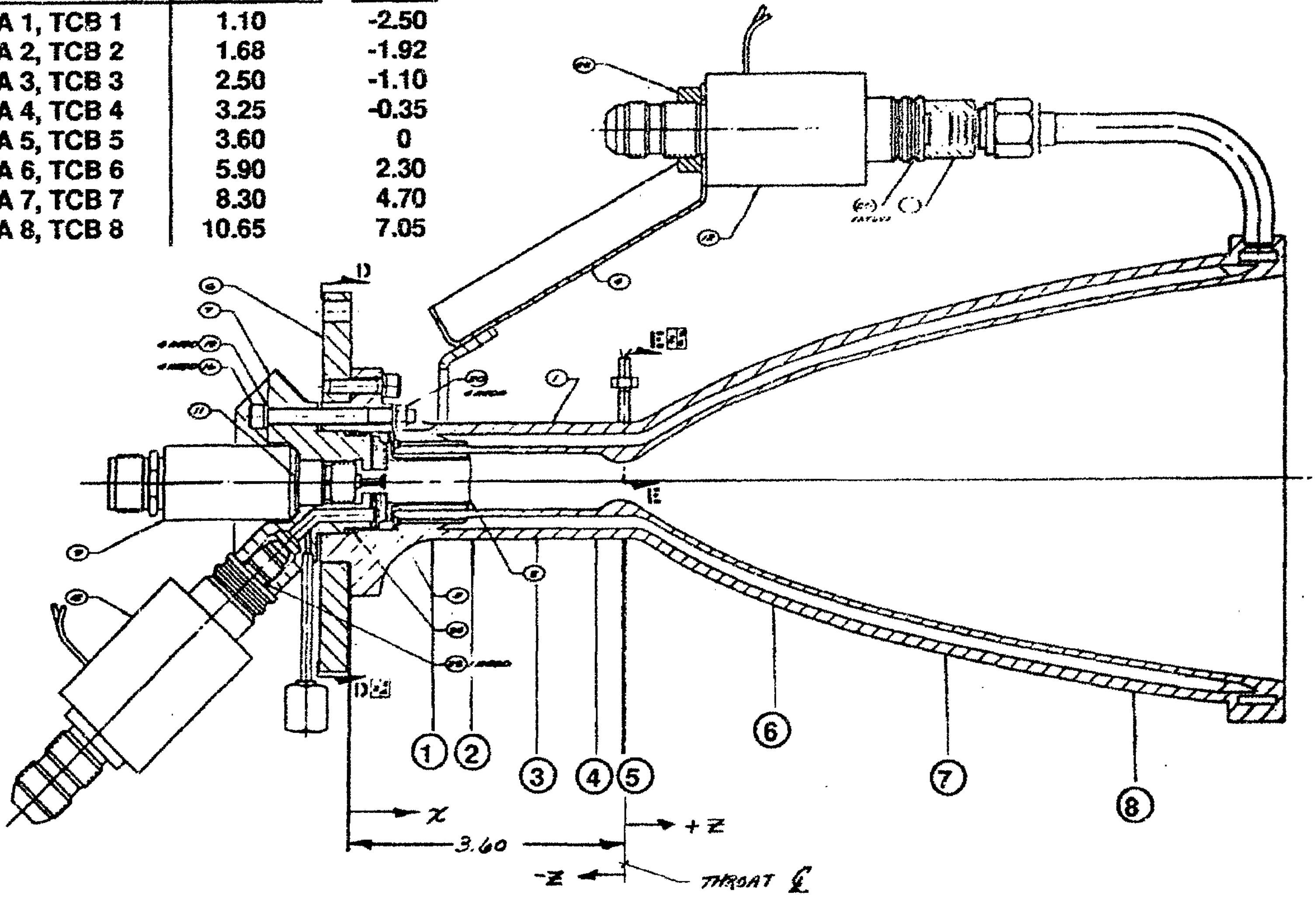

Figure 22. Chamber Thermocouple Location

## TABLE V

## TEST INSTRUMENTATION
## SPACE STATION THRUSTER NO. 1

| Parameter | Symbol | Range |
|---|---|---|
| Pressure | | |
| Fuel Tank Pressure | PFT | As Required |
| Fuel Venturi Inlet Pressure | PFVI | As Required |
| Fuel Thrust Chamber Valve JN | PFTCVI | 100 - 300 psia |
| Fuel Chamber Inlet Pressure | PFCI | 80 - 200 psia |
| Oxidizer Tank Pressure | POT | As Required |
| Oxidizer Venturi Inlet Pressure | POVI | As Required |
| Oxidizer Thruster Chamber Valve Injector | POTCVI | 100 - 300 psia |
| Oxidizer Injector Manifold | POJ | 75 - 300 + psia |
| Chamber Pressure | PC | 50 - 150 psia |
| Spark Plug Cavity Pressure | PSPC | 50 - 150 psia |
| Thrust | | |
| Measured Thrust, Bridge A | $F_A$ | 15 - 50 lbf |
| Measured Thrust, Bridge B | $F_B$ | 15 - 50 lbf |
| Propellant Temperatures | | |
| Fuel Venturi Inlet Temperature | TFVI | 32° - 2300°F |
| Fuel Chamber Inlet Temperature | TFCI | 32° - 2300°F |
| Fuel Injector Manifold Temperature | TFJ | 32° - 2300°F |
| Oxidizer Venturi Inlet Temperature | TOVI | 32° - 2300°F |
| Igniter Body Temperature | TBIG | 32° - 2300°F |

## TABLE V

## TEST INSTRUMENTATION
## SPACE STATION THRUSTER NO. 1
(Continued)

| Parameter | Symbol | Range | Location, x (in.) |
|---|---|---|---|
| Chamber Temperature | | | |
| Forward Sleeve | TCA1;TCB1 | 32° - 2300°F | 1.10 |
| Sleeve Exit | TCA2;TCB2 | 32° - 2300°F | 1.68 |
| Mid-Barrel Section | TCA3;TCB3 | 32° - 2300°F | 2.50 |
| Convergent Section | TCA4;TCB4 | 32° - 2300°F | 3.25 |
| Throat | TCA5;TCB5 | 32° - 2300°F | 3.60 |
| Forward Divergent Section | TCA6;TCB6 | 32° - 2300°F | 5.90 |
| Middle Divergent Section | TCA7;TCB7 | 32° - 2300°F | 8.30 |
| Aft Divergent Section | TCA8;TC81 | 32° - 2300°F | 10.65 |

## TABLE VI

## THRUSTER NO. 1 TEST SUMMARY FOR MIXTURE RATIO RANGE

| Mixture Ratio O/F | Total Duration (sec) | Total Impulse (lbf-sec) |
|---|---|---|
| 2 | 60 | 1,302 |
| 3 | 240 | 5,107 |
| 4 | 3,735 | 89,526 |
| 5 | 224 | 5,576 |
| 6 | 221 | 4,728 |
| 7 | 17,563 | 428,997 |
| 8 | 155 | 3,221 |
| Total | 22,198 | 538,457 |

## TABLE VII

## THRUSTER NO. 1 TEST SUMMARY FOR PERCENT FUEL FILM COOLING RANGE

| Fuel Film Cooling (%) | Mixture Ratio (O/F) | Total Duration (sec) | Total Impulse (lbf-sec) |
|---|---|---|---|
| 59 | 3 | 60 | 1,662 |
| | 4 | 980 | 26,221 |
| | 5 | 55 | 1,386 |
| | 6 | 19 | 456 |
| 64 | 3 | 60 | 1,602 |
| | 4 | 687 | 16,458 |
| | 5 | 72 | 1,749 |
| 74 | 4 | 1,547 | 35,949 |
| | 5 | 97 | 2,441 |
| 85 | 4 | 271 | 6,314 |
| | 7 | 17,219 | 420,063 |
| | 8 | 51 | 1,056 |
| 87 | 2 | 60 | 1,302 |
| | 4 | 120 | 2,184 |
| | 6 | 120 | 2,376 |
| | 8 | 66 | 1,332 |
| 88 | 6 | 60 | 1.314 |
| | 8 | 38 | 833 |
| 92 | 3 | 120 | 1,843 |
| | 4 | 130 | 2,400 |
| | 6 | 22 | 582 |
| 95 | 7 | 344 | 8,934 |
| | Total | 22,198 | 538,457 |

59 to 95. Appendix B contains a test log and reduced data of all the tests that were run for Thruster No. 1.

### 4. Experimental Results

The wide range of mixture ratio was incorporated into the test plan after completion of hardware fabrication to demonstrate the feasibility of successfully operating a thruster on the products of water electrolysis (O/F = 8.0). At the time, mission studies showed that additional hydrogen may be available from other sources, such that O/F capability from 4.0 to 8.0 was likely, with the average O/F falling between 4.5 and 5.2. Potentially, only 20 percent of the total impulse may be generated at an O/F of 8.0; nevertheless, most of the impulse (432,000 lbf-sec) for thruster No. 1 was obtained at mixture ratios from 7.0 to 8.0, with the longest firing duration being 2200 seconds at an O/F of 7.5. The thrust chamber showed absolutely no sign of any degradation from the testing.

Thermal data agree reasonably well with predicted values for the thruster design point, indicating that the thermal model was satisfactory. Measured and predicted backside wall temperature profiles were compared at a mixture ratio of 4.0 in Figures 23 and 24 for 60 and 75 percent fuel film cooling, respectively. An excellent correlation existed between predicted and measured values for the diverging section of the chamber. For the converging and cylindrical sections, it appeared that axial conduction averted the highs and lows predicted by the one-dimensional HOCOOL model. In Figures 23 and 24, the maximum measured backside temperature was within a few percent of the average predicted chamber values. Likewise, measured coolant bulk temperature rises were within 10 percent of predicted values.

Additional thermal data are given in Figures 25 and 26. Figure 25 shows maximum backside temperature variations with percent fuel film cooling. Maximum backside temperatures decreased linearly with increasing film cooling and appeared to be much more sensitive to mixture ratio. Figure 21 supported this conclusion of a stronger dependence on mixture ratio than on film cooling. The high mixture ratio (7 to 8) tests were also indicated in Figures 25 and 26, where it was apparent that the wall temperatures were high at these off-design operating points.

The igniter body, oxidizer valve body and thruster mounting plate temperatures were also monitored during testing, never exceeding values of 200°F, 75°F, and 250°F, respectively. These values were maintained regardless of operating point or test duration, even for the

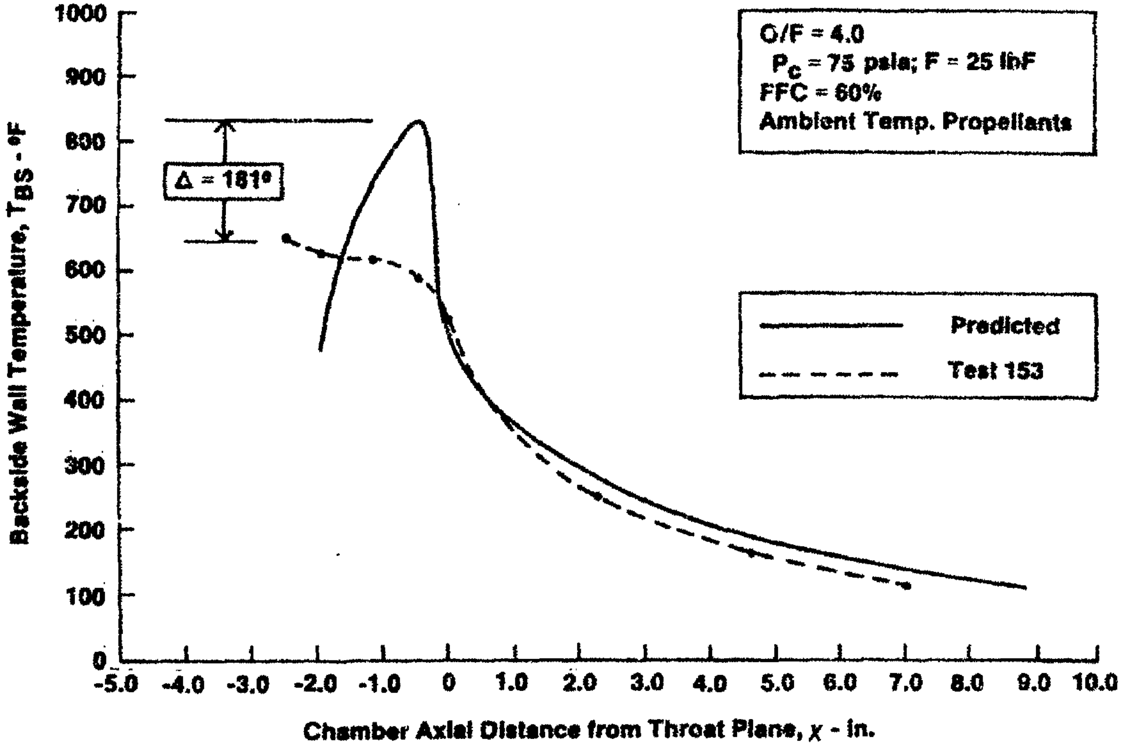

Figure 23. Backside Temperature Profile with 60 Percent FFC

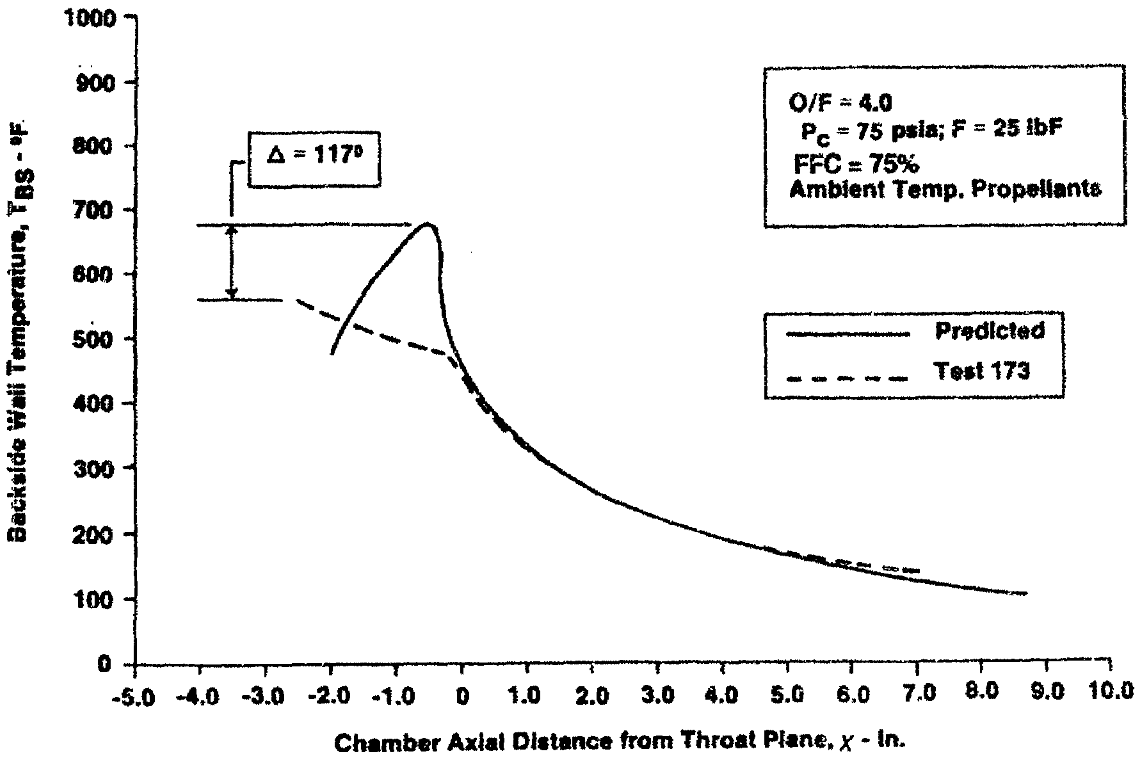

Figure 24. Backside Temperature Profile with 75 Percent FFC

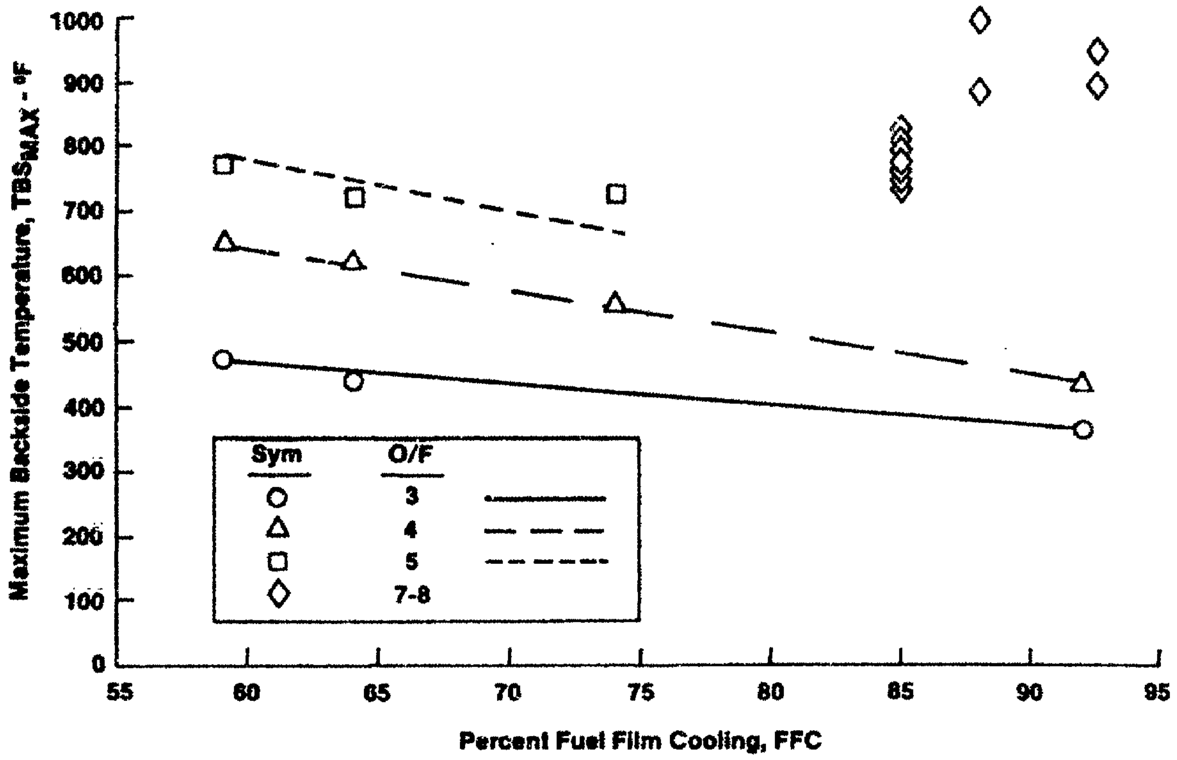

Figure 25. Maximum Backside Temperature Variation with FFC

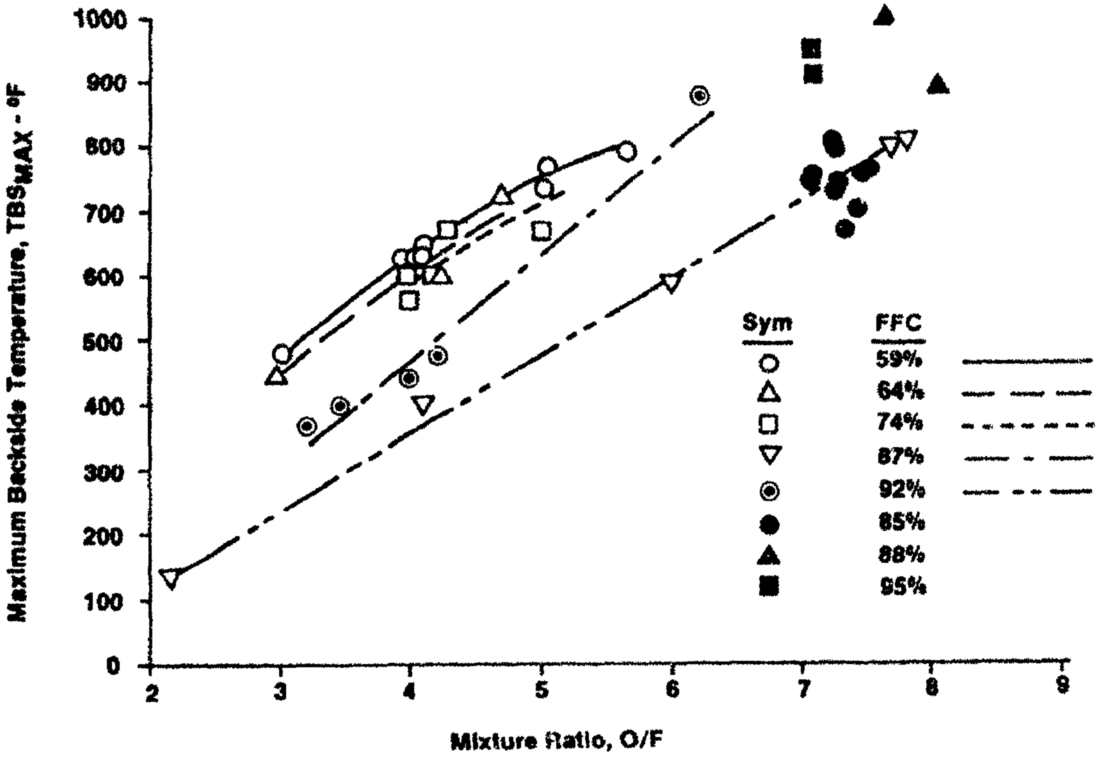

Figure 26. Maximum Backside Temperature Variation with Mixture Ratio

2200 second test previously mentioned. Such low temperatures assure minimum heat rejection to the vehicle.

Performance varied widely with film cooling and mixture ratio, as indicated in Figures 27 and 28; however, variations were linear. Predicted and measured values for performance did not agree as well as for temperature, although the trends were predicted correctly. It appeared that the larger the proportion of hydrogen flowing through the injector, the better the prediction. This condition was attributed to a momentum ratio effect in the core and was influenced by the injector hydraulics. The momentum ratio effect was most pronounced at the off-design operating points for mixture ratios of 7.0 to 8.0. At these high mixture ratios, the hydrogen injection momentum was so low that performance was degraded by 10 to 15 percent. This degradation could be recovered by optimizing the injector hydraulics for the higher mixture ratios.

## E. EVALUATION OF RESULTS

In reviewing the experimental results of Thruster No. 1, specifically the measured versus predicted performance values of Figures 27 and 28, there was concern expressed over the apparent disparity in these values. To address this concern, a careful evaluation was performed to document the methodology employed to predict performance, as well as to identify the cause(s) of the performance degradation.

As mentioned previously, the performance predictions were based on measured JPL data which provided the basis for defining a mixing efficiency, $E_m$. This data was previously given in Figure 8, and was used in determining the percent FFC for the thermal analysis. The $E_m$ values indicated were overall mixing efficiencies, which were influenced by two distinct mixing zones, as shown in Figure 29. The first zone was comprised of 100 percent of the $GO_2$ and 40 percent (for 60 percent FFC) or perhaps 25 percent (for 75 percent FFC) of the $GH_2$. The $GH_2$ impinged normal to the $GO_2$ flowing through the annulus formed between the spark plug tip and the inner diameter of the platelet stack. These core gases mixed as they flowed along the inner diameter of the sleeve. At the end of the sleeve, the core gases began to be entrained into the FFC exiting the end of the sleeve, thus forming the second mixing zone. These two zones were treated with a two stream tube model, one stream tube being oxidizer-rich and the other being fuel-rich, as discussed in Section III, B, 3.

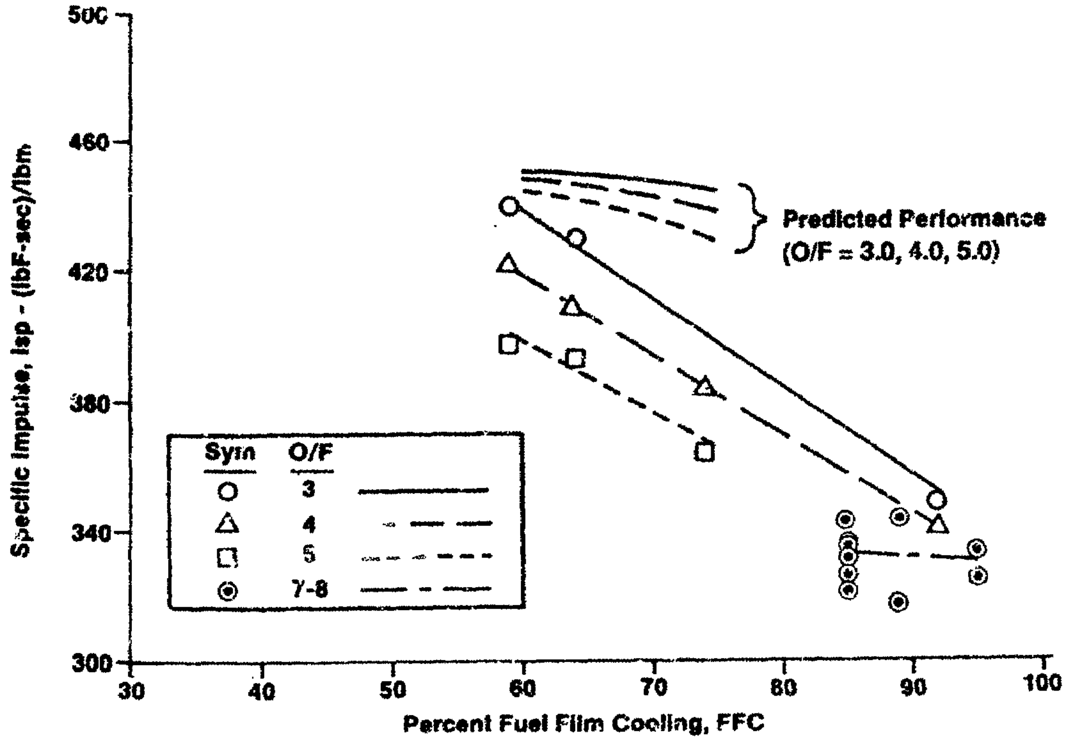

Figure 27. Performance Variation with Percent FFC

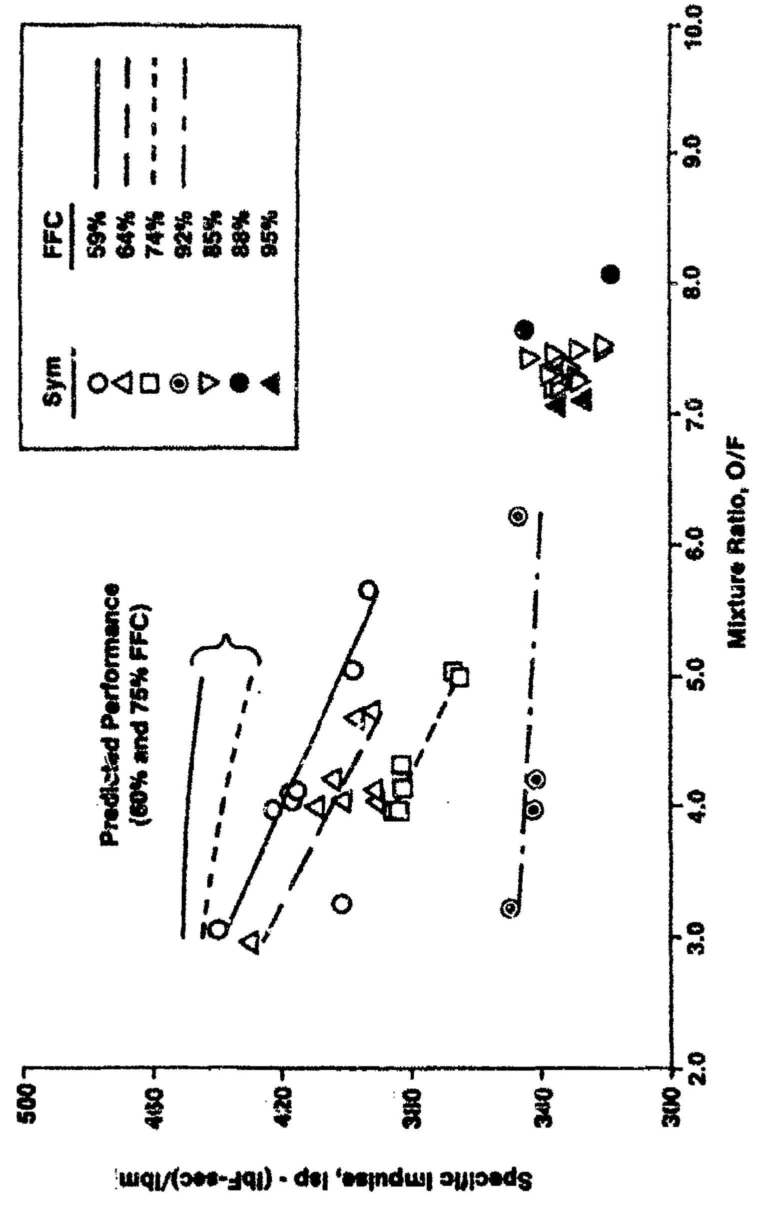

Figure 28. Performance Variation with Mixture Ratio

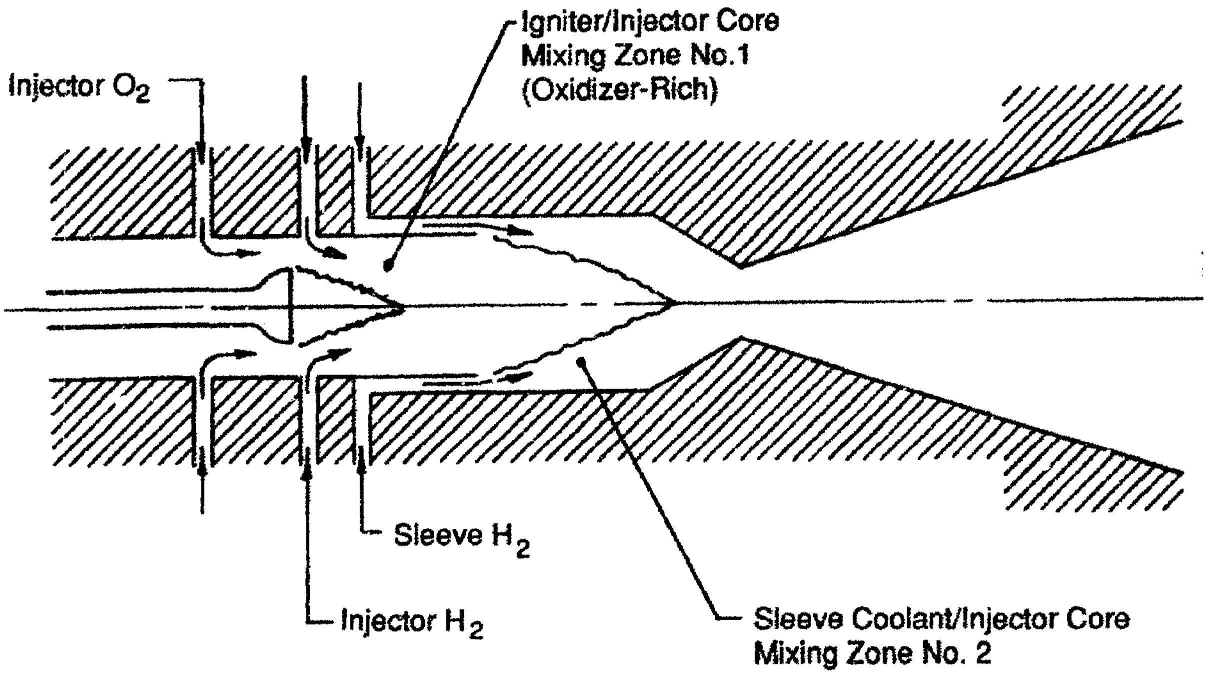

Figure 29. Two Mixing Zones of Thruster Design

The JPL data of Figure 8 defined the trends of combustion efficiency with percent FFC. At an O/F of three (3.0), reasonable combustion efficiencies of approximately 95 percent ($E_m \approx 0.5$) were attained at 60 percent FFC. Even at 90 percent FFC, where the combustion efficiency decreased to approximately 85 percent ($E_m \approx 0.25$), the delivered specific impulse was still 390 to 400 lbf-sec/lbm for the JPL thruster. This performance reduction associated with increased percentage FFC could be caused by either a decrease in the core mixing efficiency or in the core-to-coolant mixing efficiency.

In reviewing Figures 27 and 28 for the performance of the NASA LeRC Thruster No. 1, it is apparent that there was a significant decrease in $I_{sp}$ with increasing FFC and O/F, respectively. Actually, the performance decrease associated with increasing FFC on Thruster No. 1 was greater than observed with the JPL data and greater than predicted. Also, the performance decrease with respect to increasing mixture ratio was dependent upon the percent FFC and was worse than predicted. At high percentages of FFC (~92%), performance was essentially constant for mixture ratios varying from 3.0 to 6.0. The first consideration in understanding these unexpected performance trends was to evaluate the methodology employed in the predictions.

Aerojet has used both the simplified and the rigorous JANNAF methodology for predicting engine performance, these two approaches being outlined in Appendix C. In the case of Thruster No. 1, the pretest performance predictions were based on the simplified JANNAF methodology and the previous JPL design. The performance losses considered included the following:

- Kinetics Efficiency ($\eta_{KN}$) - One-Dimensional Kinetics (ODK) Program - tabulated data from 15 degree cones and corrected for throat size.
- Boundary Layer Loss ($\Delta$FBL) - Boundary layer charts from the Turbulent Boundary Layer (TBL) code.
- Divergence Efficiency ($\eta_{DIV}$) - Rao nozzle design charts.
- Energy Release Efficiency ($\eta_{ERE}$) - Combustion inefficiency due to incomplete mixing before reaching the chamber throat.

Of these losses, the Energy Release Efficiency (ERE) was the least well-characterized for it must account for the intra-core mixing efficiency as well as the core-to-coolant mixing efficiency. Subsequent to Thruster No. 1 testing, analyses were run using test data which determined ERE with respect to O/F. Figure 30 shows ERE plotted as a function of O/F for 59 percent FFC. In addition, curves for ODE, ODK and a perfect injector (ERE = 100 percent) are included in Figure 30. ERE declines significantly with increasing O/F for a fixed FFC of 59 percent, indicating that incomplete propellant mixing was the major cause in the decline of performance at the higher mixture ratios.

The cause(s) of the significant decrease in ERE with increasing O/F was from a decrease in either the core mixing efficiency or the core-to-coolant mixing efficiency. The core to coolant mixing efficiency was determined not to be a contributing factor based on Figure 31. In this figure, ERE was independent of the percentage of FFC and the coolant-to-core velocity ratio, the latter being the significant factor in the mixing efficiency of the core and FFC flows. ERE was highly dependent on O/F, or on the amount of $GH_2$ flow into the core, i.e., the more $GH_2$ into the core (lower mixture ratios), the higher the ERE.

Therefore, it was concluded that the mixing efficiency of the core gases was the predominant cause in the degradation of ERE with increasing O/F and that momentum flux ratio ($\rho_F V_F^2/\rho_{OX} V_{OX}^2$) was the primary factor affecting core mixing efficiency. Previous work performed on the Multiple Jet Study[12,13] correlated jet penetration and total mixing ($E_T$) to operating and design parameters. These correlations, when applied to the Space Station Thruster No. 1, indicated the design did not produce good mixing at higher mixture ratios and percentages of FFC, confirming the aforementioned conclusions. Specifically, Thruster No. 1 had inadequate fuel/oxidizer ($H_2/O_2$) momentum flux ratio and mixing length to achieve a high mixing efficiency (and ERE) at the higher mixture ratios and percentages of FFC, as was evidenced by Figures 32 and 33. The effect of momentum flux ratio and of FFC on ERE was further highlighted by Figure 34. Appropriate design modifications to improve injector hydraulics ($H_2/O_2$ momentum flux ratio) and effective mixing length would improve the mixing efficiency of the core and thereby improve the ERE ($I_{sp}$) of the thruster at the higher mixture ratios and percentages of FFC.

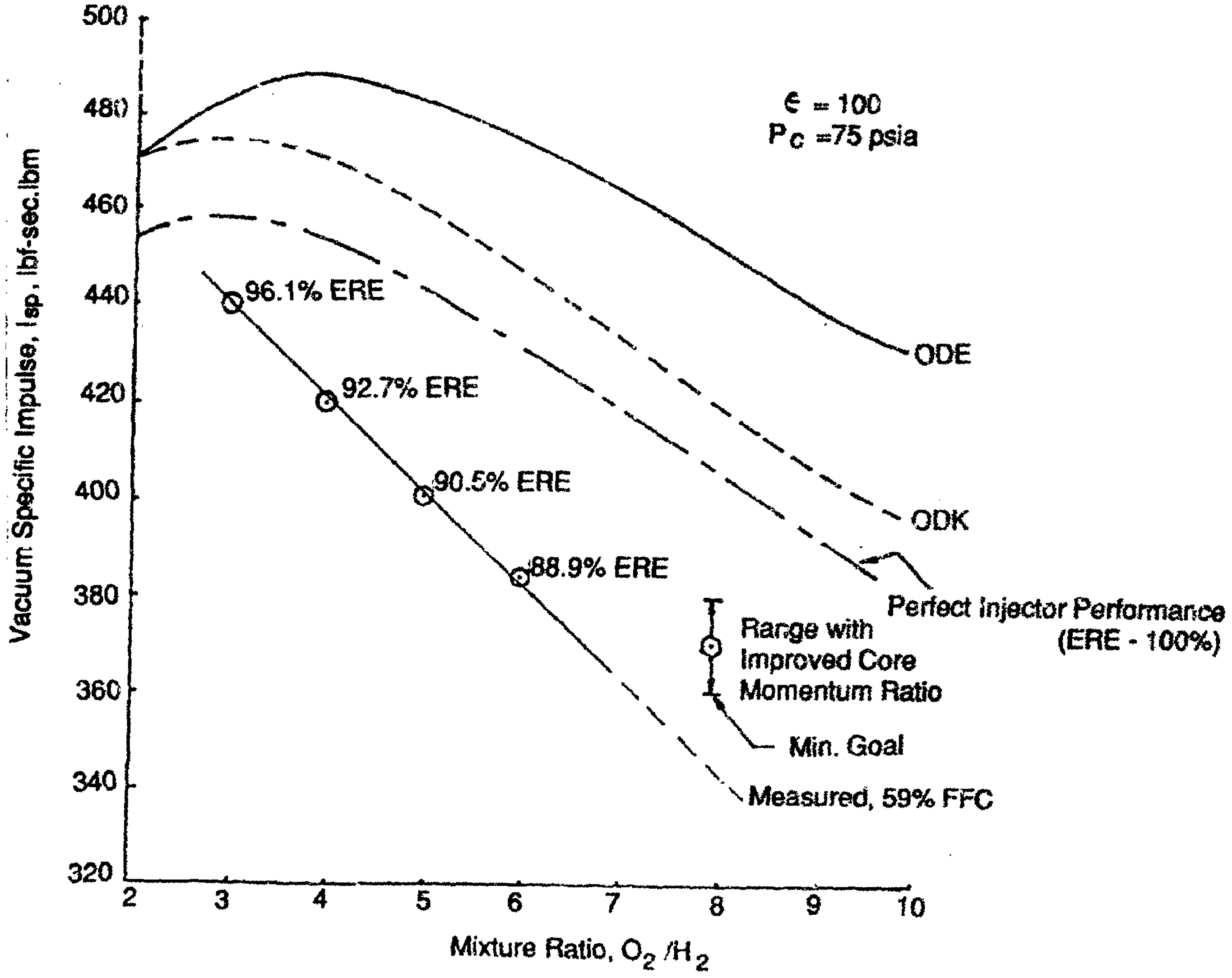

Figure 30. Energy Release Efficiency and Specific Impulse Trends with Increasing O/F

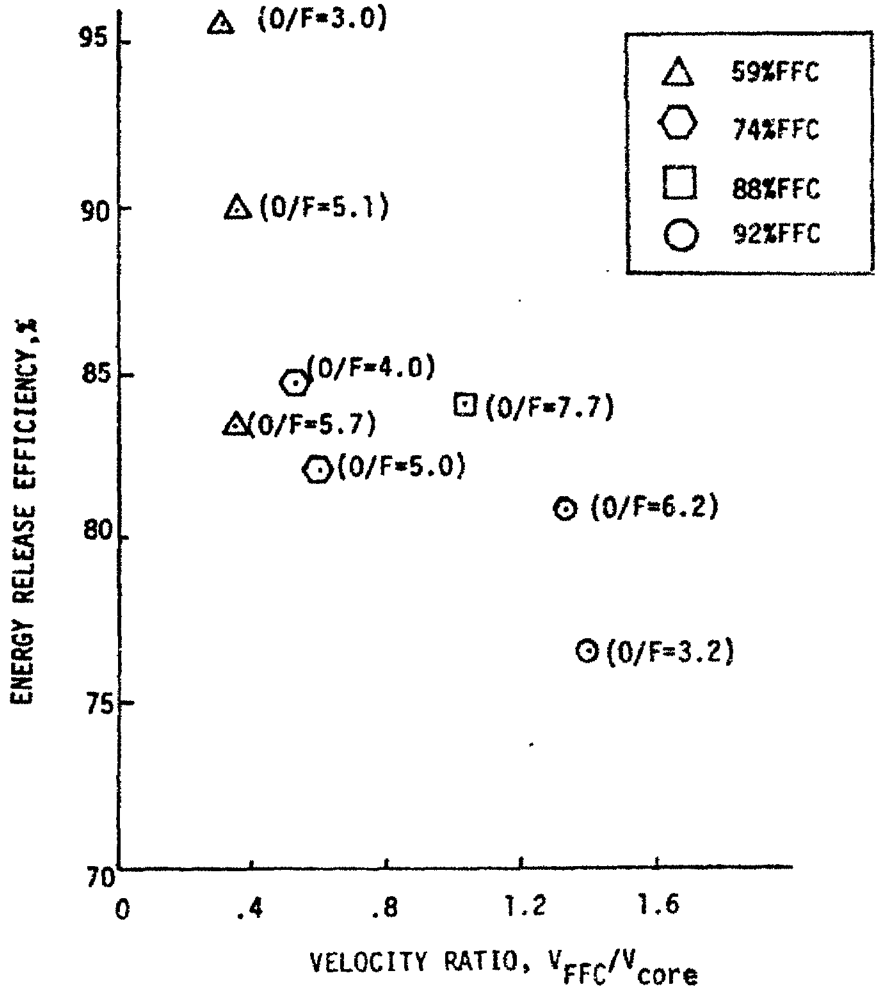

Figure 31. Energy Release Efficiency for Constant %FFC and Velocity Ratio

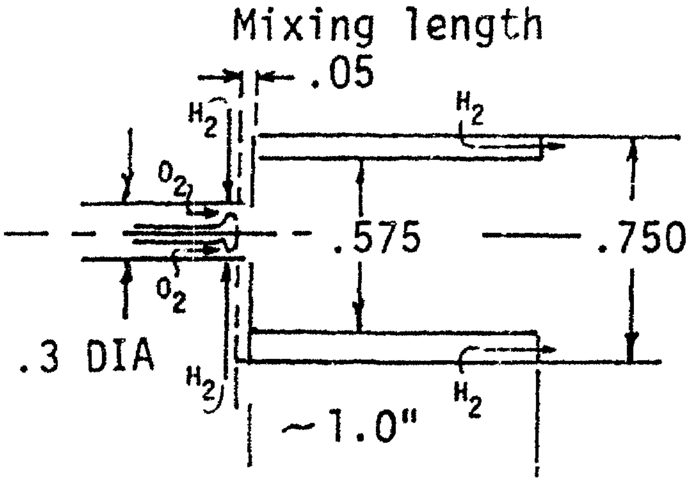

| | OPERATING CONDITION | | | |
|---|---|---|---|---|
| | 59% FFC | | 92% FFC | |
| O/F | 3.0 | 6.0 | 3.0 | 8.0 |
| $\frac{(\rho v^2)_{H_2}}{(\rho v^2)_{O_2}}$ | 17.0 | 6.0 | 1.2 | 0.3 |

**Figure 32.** Current Space Station Thruster has Inadequate $H_2/O_2$ Monmentum Flux Ratio and Mixing Length for Core Flow at High Mixing Ratio

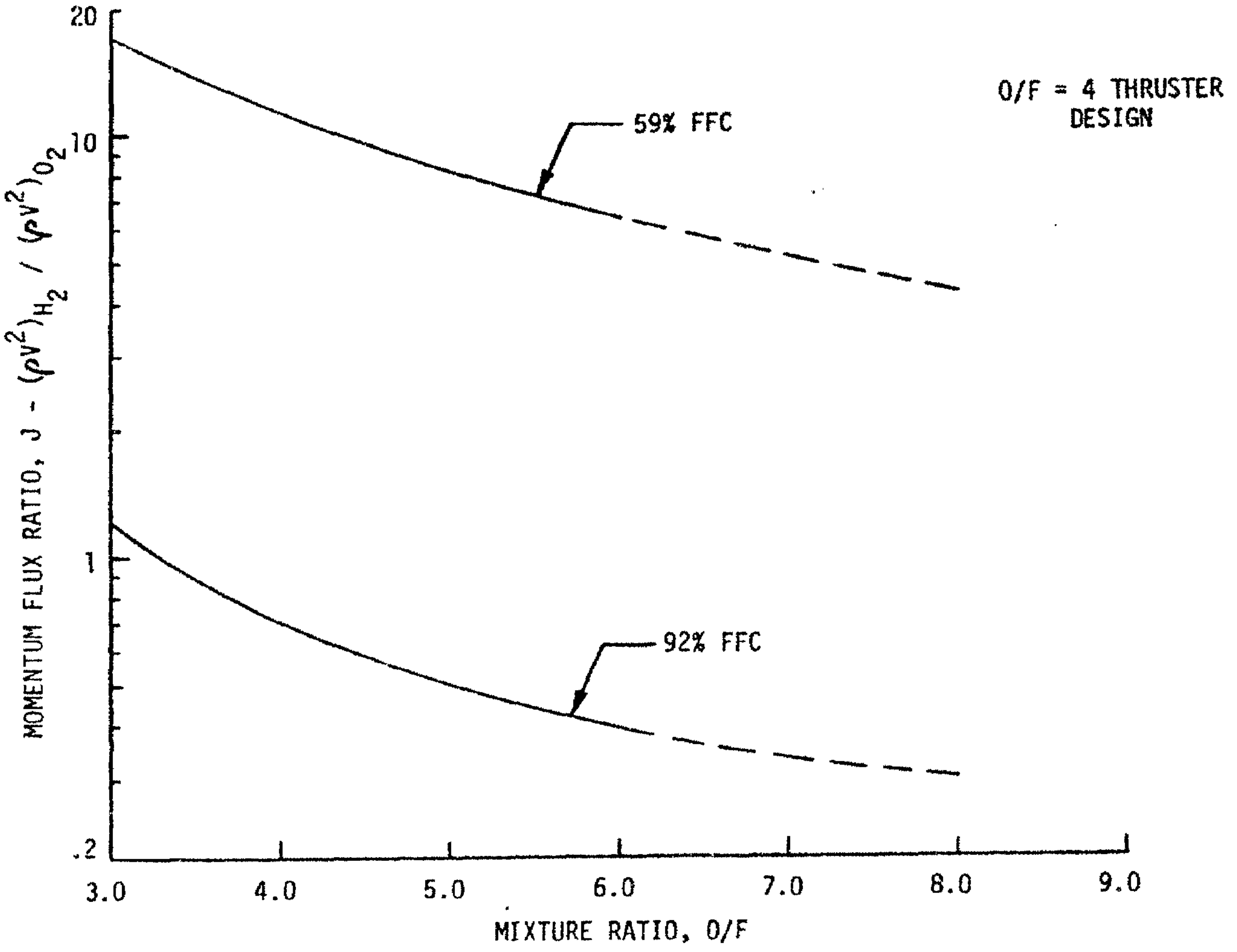

Figure 33. Momentum Flux Ratio for Different %FFC and O/F

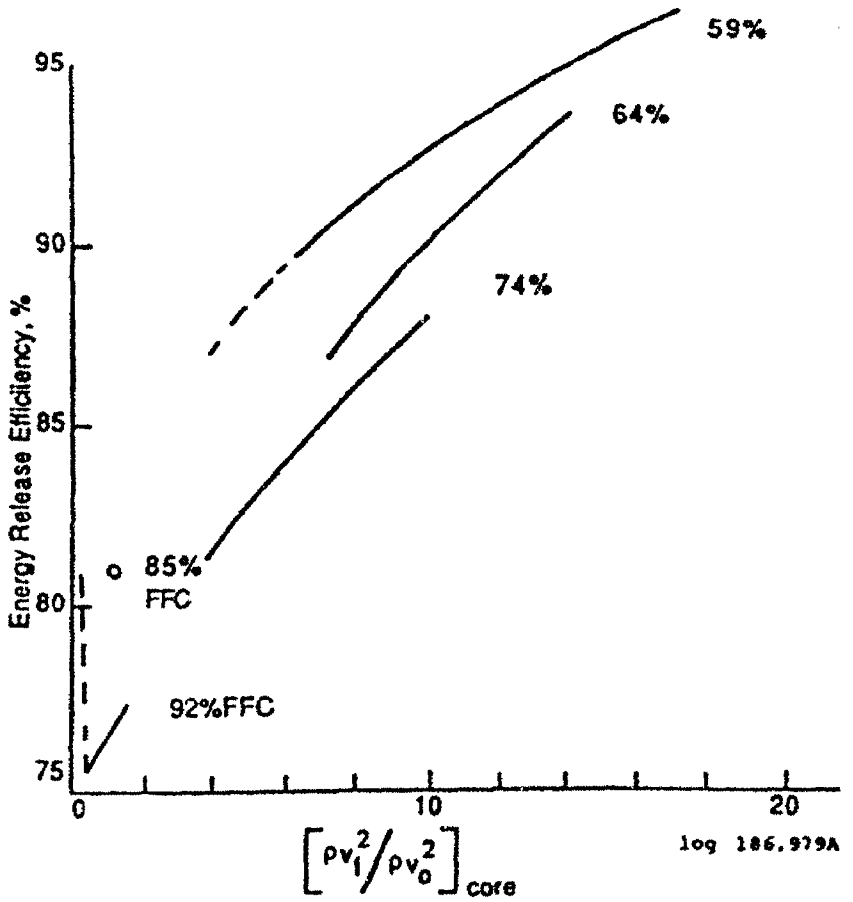

Figure 34. ERE for Increasing %FFC and Momentum Flux Ratio

## F. CONCLUSIONS

The technology for a 25 lbf $GO_2/GH_2$ thruster for Space Station propulsion was successfully demonstrated. Based on a previously proven igniter concept, a good thruster design approach was confirmed through extensive hot-fire testing, which covered mixture ratios from two (2.0) through eight (8.0) and FFC from 59 to 92 percent. The corresponding data base provided a substantial foundation upon which to evaluate the thruster operation and to establish the key design parameters affecting thruster performance. An optimized thruster for successful O/F = 8.0 operation could now be designed.

# IV. SPACE STATION THRUSTER NO. 2

## A. DESIGN APPROACH

### 1. Design Background

The design and the test results from Thruster No. 1 formed the basis from which Thruster No. 2 was designed. Figure 30 indicated that a minimum ERE of 96 percent was required to obtain good performance ($I_{sp}$). In addition, Figures 32, 33, and 34 showed that a momentum flux ratio of 17.0 corresponded to the desired 96 percent ERE (O/F = 3.0 and FFC = 59%). Therefore, Figure 35 was prepared to relate the Thruster No. 1 test data with another mixing efficiency parameter, $E_T$, defined in References 12 and 13. This $E_T$ parameter was directly related to the previously discussed momentum flux ratio, J, within the injector core. An $E_T$ of 60 percent corresponded to an ERE of 96 percent (O/F = 3.0 and 59 percent FFC). Therefore, J and $E_T$ became the guiding parameters for the design of the injector hydraulics to assure good core mixing. Specifically, a minimum value of 20 was established for J, and $E_T$ had to surpass 60 at an O/F of 8.0, for design purposes

### 2. Design Concept

The design concept was not changed for Thruster No. 2, because the concept was believed to be a good one; however, Thruster No. 2 was modified based on Thruster No. 1 test results and optimized for O/F = 8.0. For such an overall mixture ratio (8.0), the core mixture ratio was 20.0 for 60 percent FFC. The Thruster No. 2 assembly is shown in Figure 36.

There were seven significant modifications implemented in the design of Thruster No. 2 and these modifications were as follows:

(1) Decreased potential flow expansion area ratio (ε) from 100:1 to 30:1 — lowered coolant bulk temperature rise and lowered fabrication costs;

(2) Increased the number of chamber coolant channels from 24 to 32 — improved chamber cooling;

(3) Changed coolant channel geometry to permit variable depth channels so that coolant velocity could be increased at high heat flux locations — improved chamber cooling;

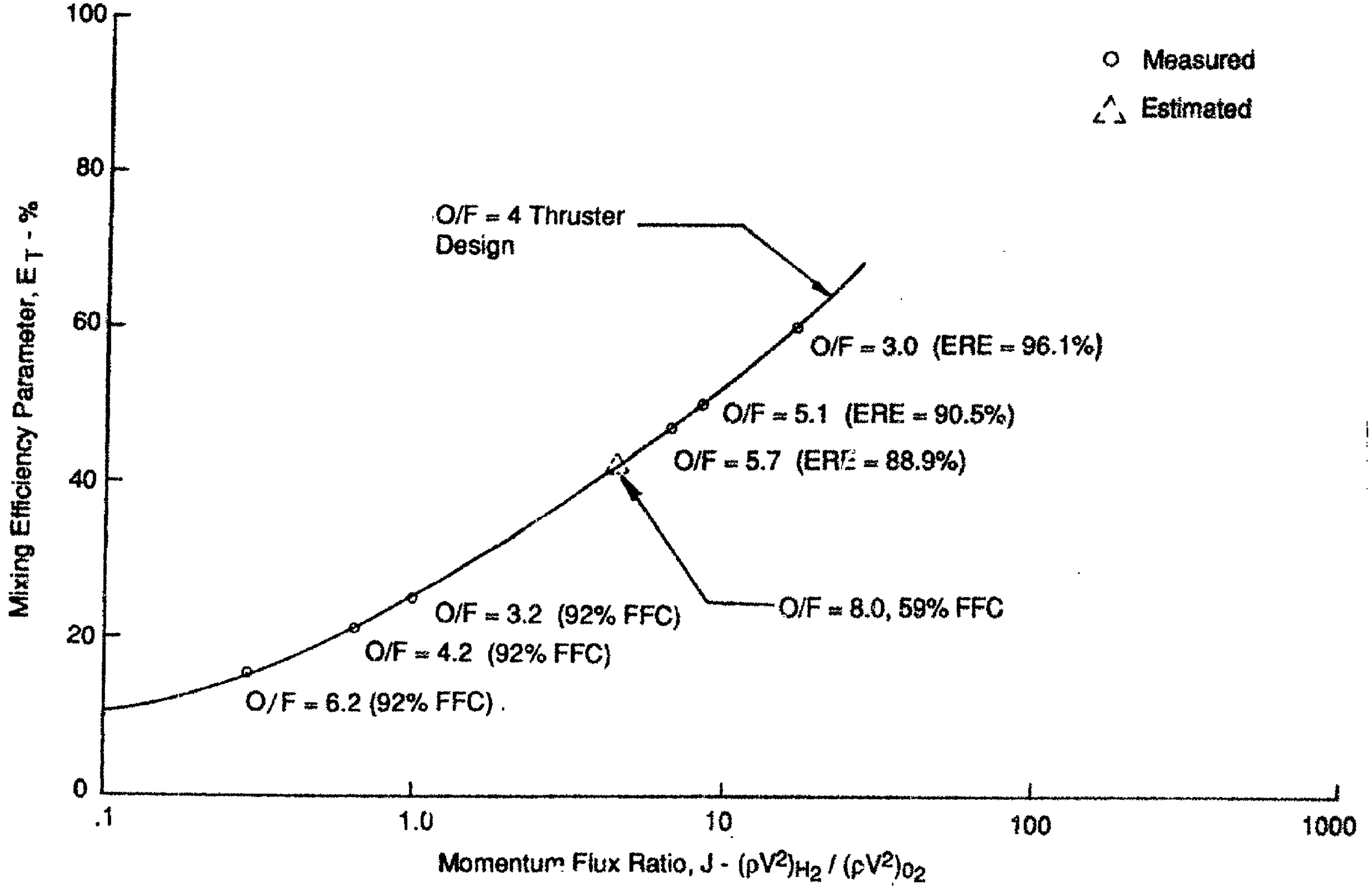

**Figure 35. Mixing Efficiency, $E_T$, for Thruster No.1**

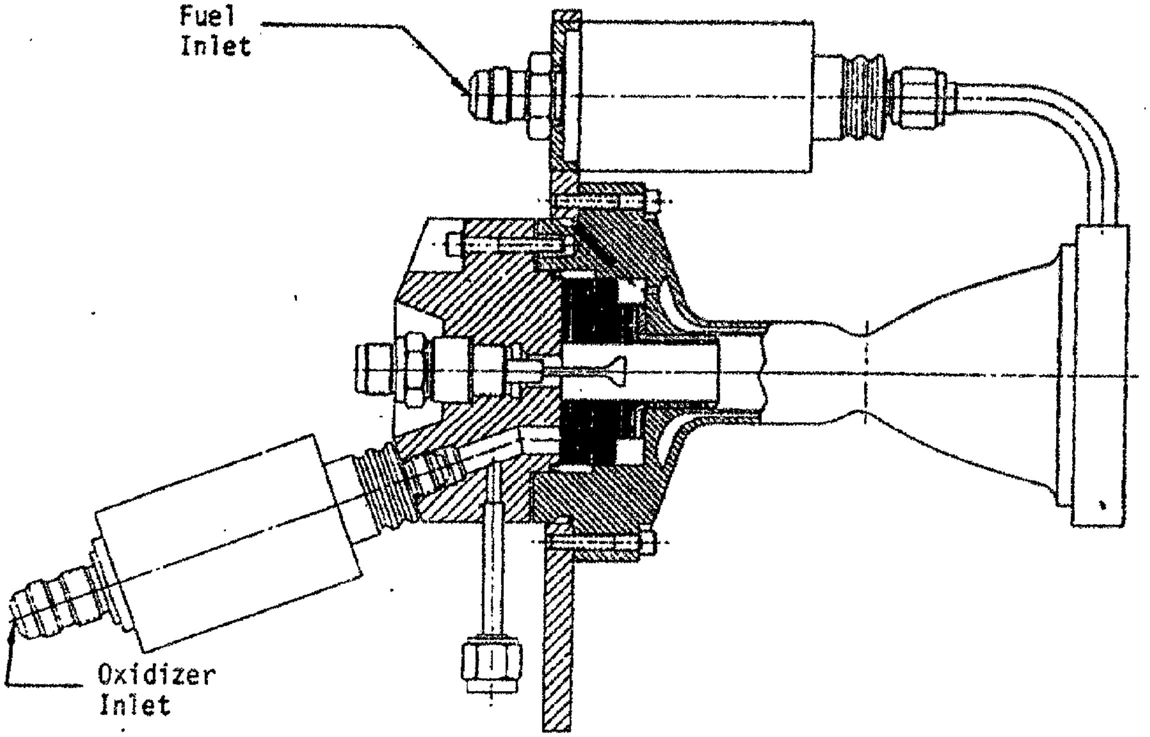

Figure 36. Thruster No.2 Assembly

(4) Increased chamber contraction area ratio ($\varepsilon_c$) from 2.25 to 4.00 — increased inner surface area, thus lowering effective heat flux;

(5) Reduced chamber gas-side wall thickness from 0.080 to 0.040 inches — improved chamber cooling;

(6) Changed injector hydraulics to provide a minimum fuel-to-oxidizer momentum flux ratio of 20 — improved injector core mixing and thruster performance;

(7) Removed rearward facing step between injector and sleeve — improved injector core mixing and thruster performance.

The initial five modifications were incorporated in the chamber design; the latter two modifications were incorporated into the injector and sleeve designs, with the seventh modification depicted in Figure 37. Based on the design changes implemented, Figures 33 and 35 were updated as Figures 38 and 39, respectively, indicating that the injector hydraulics would provide the desired core mixing.

### 3. Design Point

The design point for Thruster No. 2, based on the new contract requirements of Table II, were contrasted with the design point of Thruster No. 1 in Table VIII. This design point was compatible with the requirement for water electrolysis generated propellants, namely O/F = 8.0 operation.

## B. DESIGN ANALYSIS

### 1. Ignition Analysis

The same type of ignition analysis was performed for Thruster No. 2 as was performed for Thruster No. 1. This analysis resulted in the spark igniter operating characteristics of Table IX.

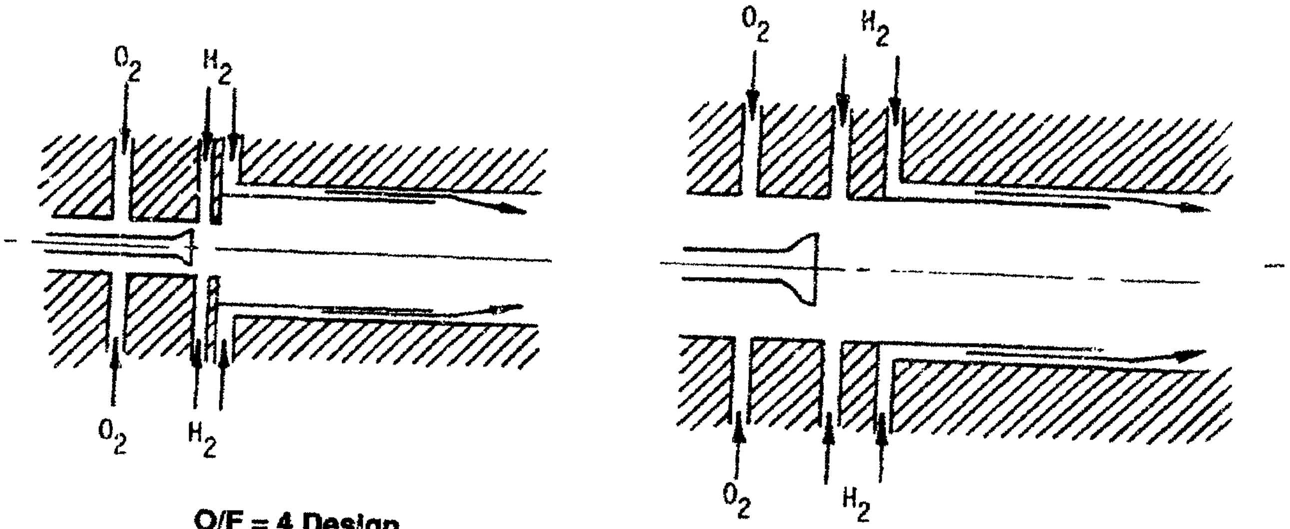

O/F = 4 Design

O/F = 8 Design

Figure 37. Redesign of Injector / Sleeve Interface

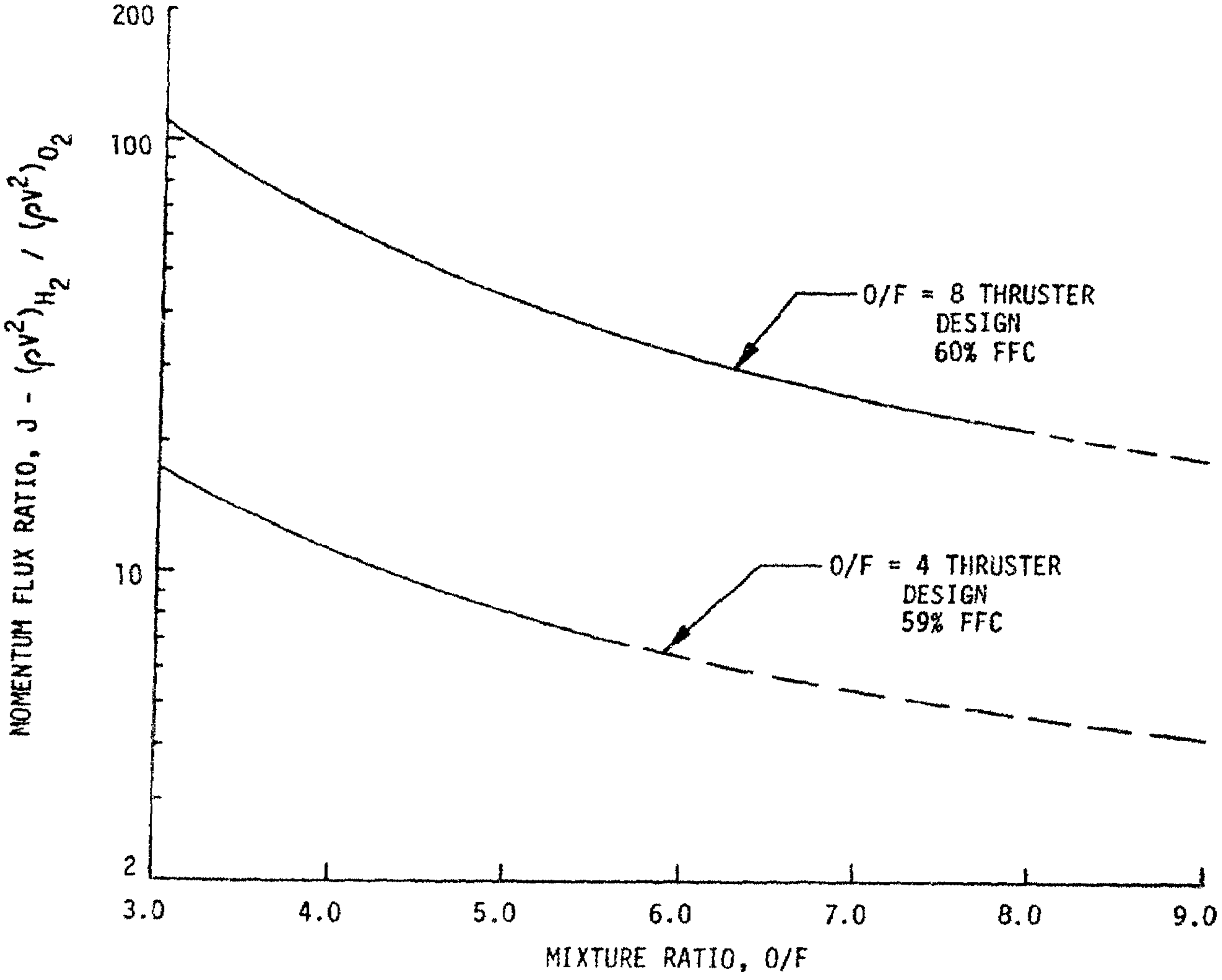

Figure 38. Momentum Flux Ratio Compared for Thruster Nos. 1 and 2

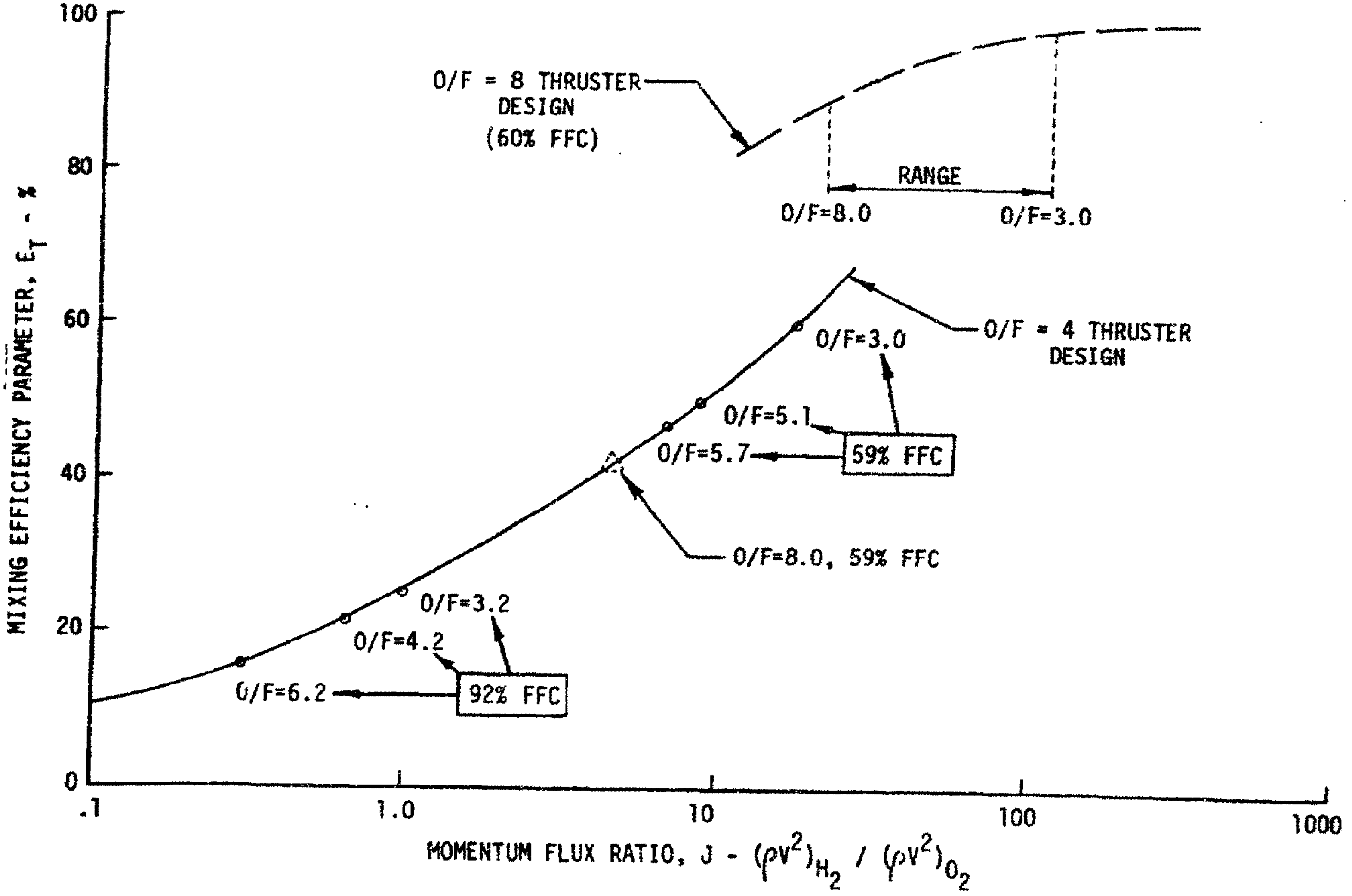

Figure 39. Mixing Efficiency, $E_T$, Compared for Thruster Nos. 1 and 2

## TABLE VIII

## DESIGN POINTS, NASA LeRC SPACE STATION THRUSTERS

| Parameter | Thruster No. 1 First Generation | Thruster No. 2 Second Generation |
|---|---|---|
| Thrust, F-lbf | 25 | 25 |
| Chamber Pressure, Pc-psia | 75 | 75 |
| % FFC | 75 | 60 |
| Overall Mixture Ratio, MR | 4 | 8 |
| Core Mixture Ratio, $MR_{CORE}$ | 16 | 20 |
| Fuel Inlet Temperature, TFI-°R | 200 - 530 | 200 - 530 |
| Oxidizer Inlet Temperature, TPI-°R | 300 - 530 | 300 - 530 |
| Throat Diameter, $D_T$-in. | .500 | .500 |
| Chamber Diameter, $D_C$-in. | .750 | 1.000 |
| Contraction Area Ratio, $\varepsilon_c$ | 2.25 | 4.00 |
| Expansion Area Ratio, $\varepsilon$ | 100 | 30 |
| Chamber Length, L', in. | 1.925 | 2.000 |

## TABLE IX

## SPACE STATION THRUSTER NO. 2
## SPARK IGNITER OPERATING CHARACTERISTICS

| | |
|---|---|
| Spark Igniter Energy, mJ | 10 min |
| Spark Rate, SPS (Hz) | 60 min. |
| Spark Gap, in. | 0.200 |
| Igniter Sleeve I.D., in. | 0.810 |
| Breakdown Potential, Volts | 40,000 |
| Minimum Ignition Pressure, psia | 3.70 |
| Maximum Ignition Pressure, psia | 36.0 |
| Predicted Nominal Cold Flow Pressure, psia | 22.4 |

### 2. Thermal Analysis

The same thermal model was utilized during the design of Thruster No. 2, which required the input of the two empirical constants previously mentioned in Section III, B, 2. These constants, $C_{gn}$ and Km (formerly KSO), were still based on the aforementioned JPL data. A gas-side temperature profile was predicted for the nominal chamber pressure (75 psia), depicted in Figure 40. In addition, temperature profiles were prepared for 40 percent (30 psia) and 135 percent (101 psia) of nominal chamber pressure (75 psia), presented in Figures 41 and 42, respectively. These three cases were at a mixture ratio of eight (8.0) and 60 percent FFC.

### 3. Performance Analysis

The output from the thermal mixing model was used to establish the characteristics of the two stream model used in the performance model. The performance analysis accounted for two-dimensional effects, as well as kinetics, divergence and boundary layer losses. The performance prediction was documented in Table X for the design point. Performance predictions for the thruster operating range were made, as displayed in Figure 43. The performance improvement for higher area ratios was determined and presented in Figure 44.

### 4. Chamber Life Analysis

The temperature differential through the chamber wall was predicted to be about 100°F, which was very small. The associated thermal strain range was predicted to be on the order of 0.2 percent. Such a small thermal strain range gave a low cycle fatigue (LCF) life in excess of 10,000 cycles according to the Manson-Halford method of universal slopes[11]; therefore, LCF was considered to not be an issue. The design also surpassed the minimum criteria for creep rupture; consequently, the life limiting case would be high cycle fatigue (HCF).

## C. DESIGN DESCRIPTION AND FABRICATION

The Thruster No. 2 design was similar to Thruster No. 1 and consisted of three major components: the thrust chamber, the sleeve insert, and the integral igniter injector. The thrust chamber was made of an axially slotted zirconium-copper (ZrCu) liner that had an electroformed nickel (EFNi) outer jacket. This EFNi outer jacket closed out the 32 chamber coolant channels and provided the structural support for the ZrCu liner. The diverging section of the chamber was

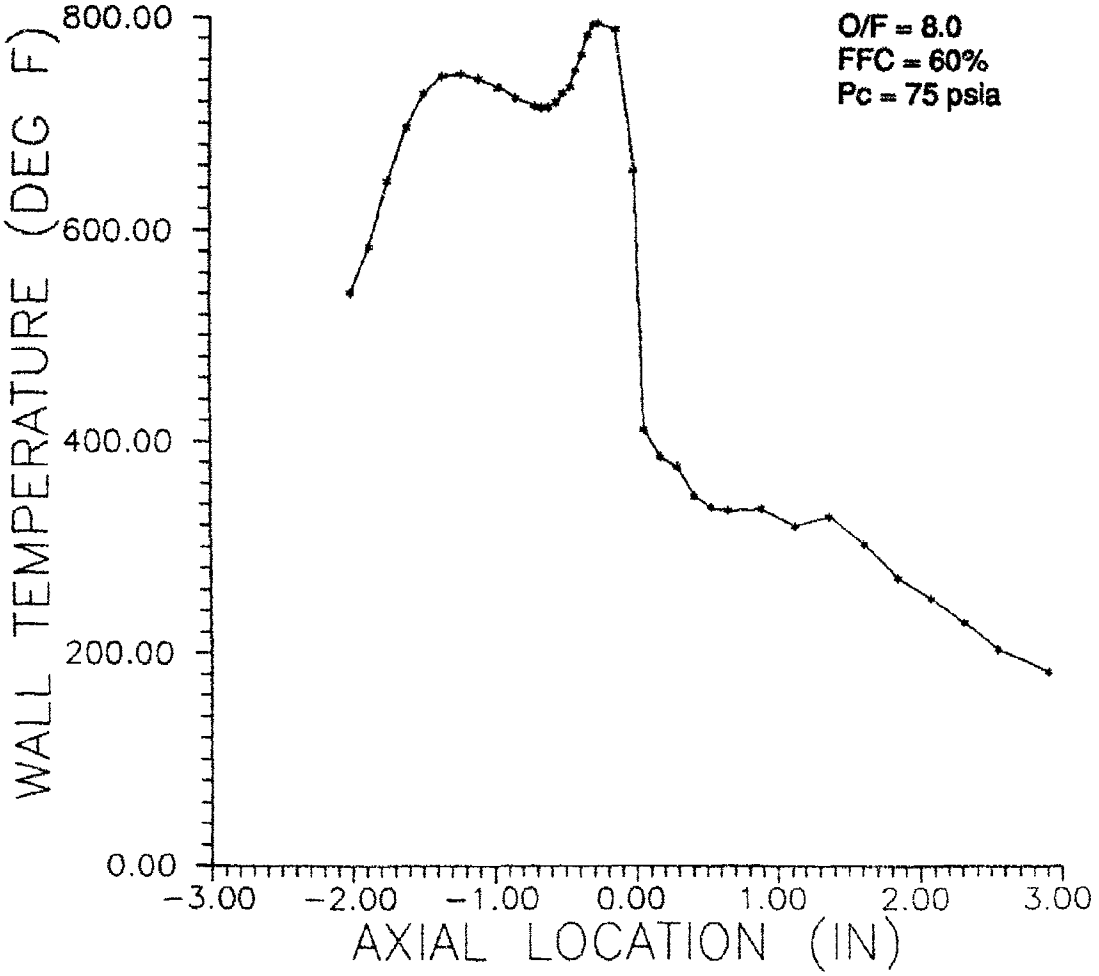

Figure 40. Predicted Gas-Side Wall Temperature Profile for Nominal Chamber Pressure

## TABLE X

## DESIGN POINT PERFORMANCE PREDICTION FOR THRUSTER NO. 2

- Nozzle contour (potential flow) is optimized at $\varepsilon = 30:1$ for 85% bell.
- Boundary layer displacement thickness is accounted for by the geometric nozzle contour.

MR = 8, FFC = 60%

| | Turbulent | Laminar |
|---|---|---|
| ODK | 384.3 | |
| ODE | 406.0 | |
| % Kin | 94.655 | |
| TDE | 404.0 | |
| TDE * % Kin | 382.4 | |
| 97% ERE | 370.9 | 370.9 |
| BLM Losses | 9.9 | 7.6 |
| Isp* | 361.0 | 363.3 |

---

* Isp for a perfect injector is approximately 387.

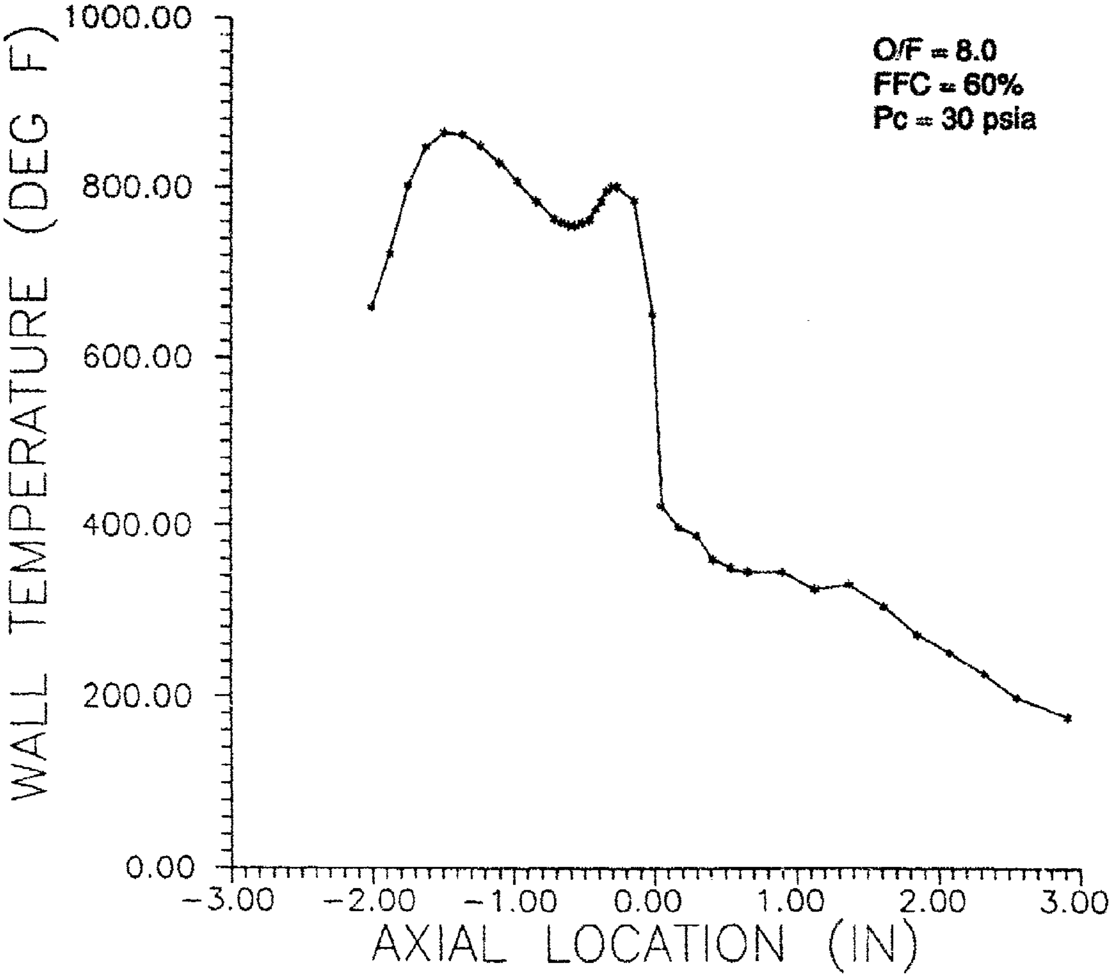

**Figure 41. Predicted Gas-Side Wall Temperature Profile for 40 Percent of Nominal Chamber Pressure**

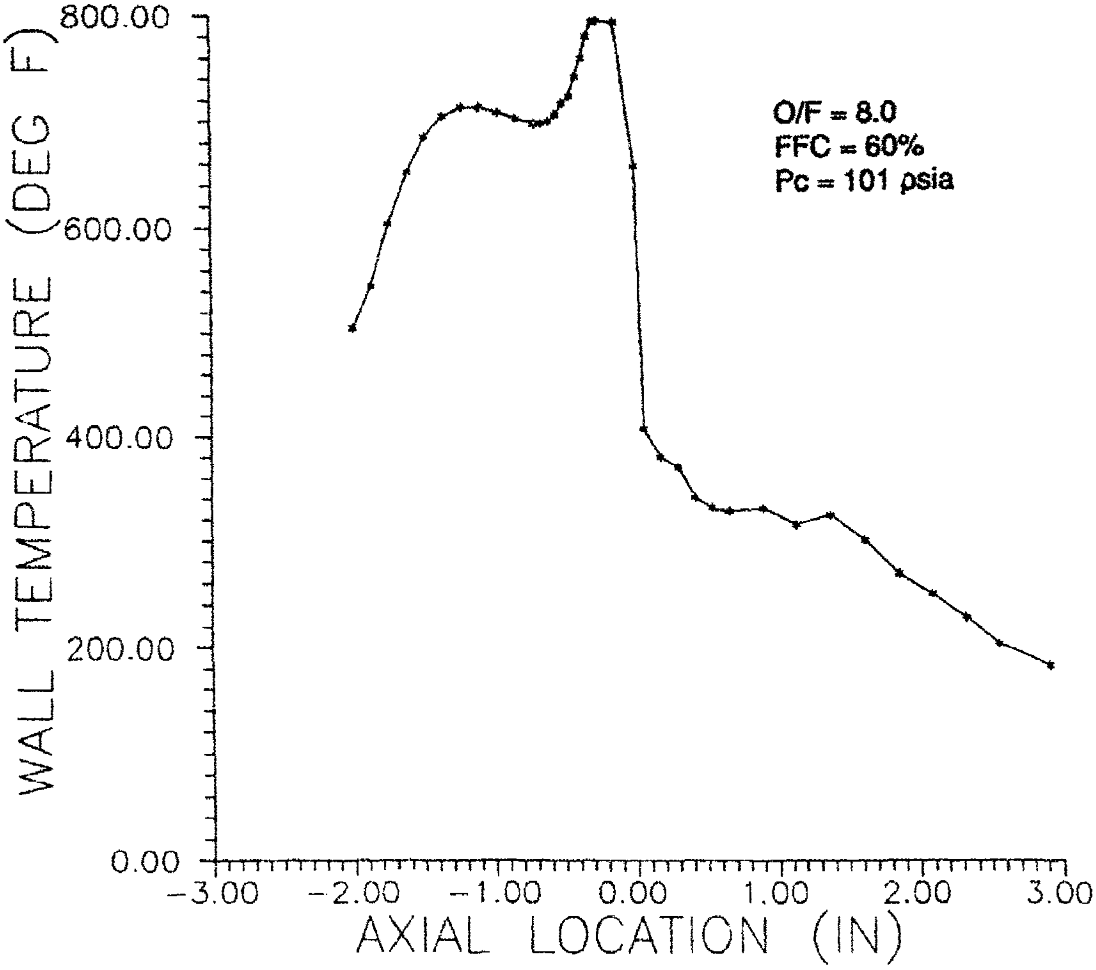

**Figure 42. Predicted Gas-Side Wall Temperature Profile for 135 Percent of Nominal Chamber Pressure**

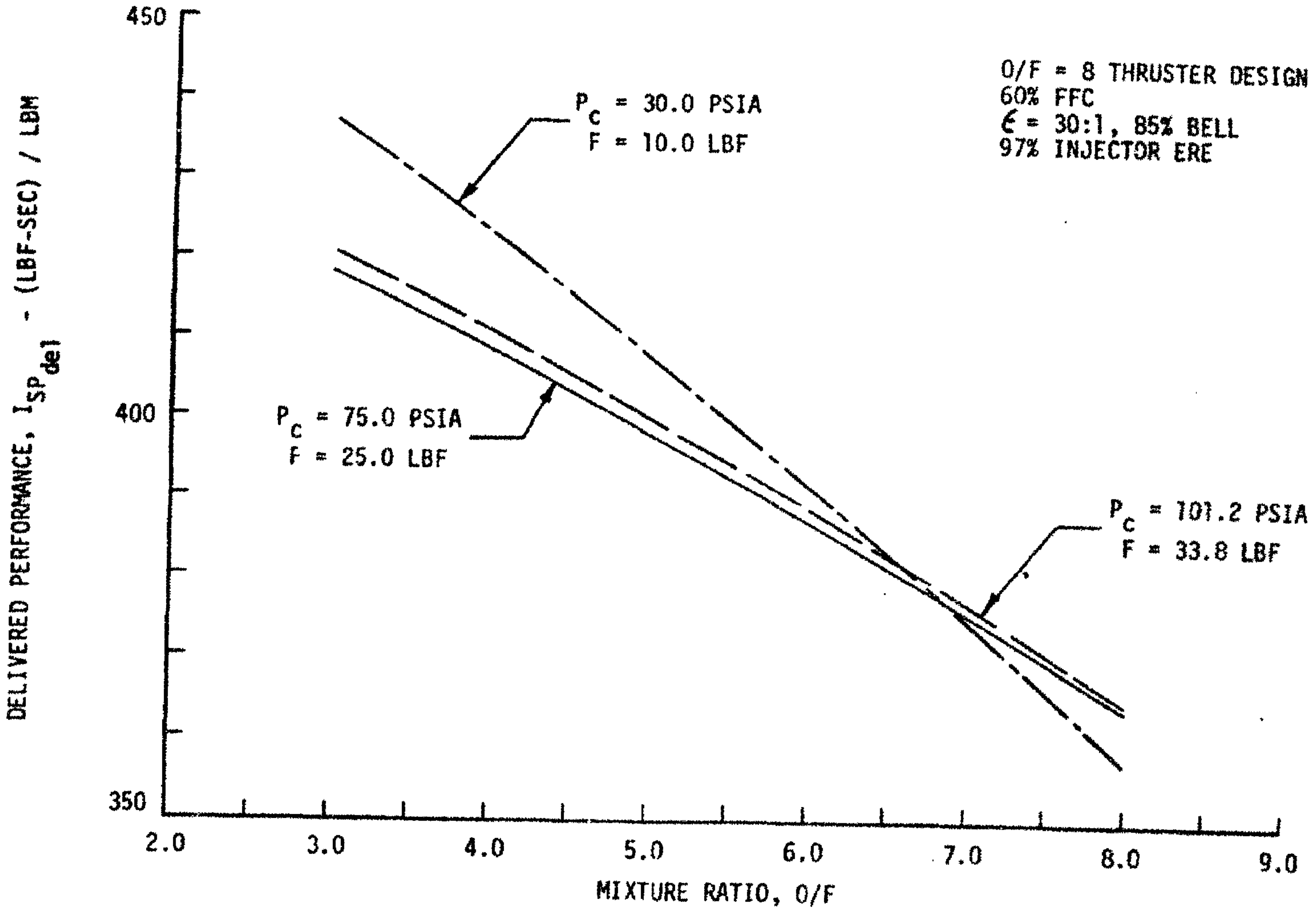

Figure 43. Performance Predictions for Operating Range of Thruster No. 2

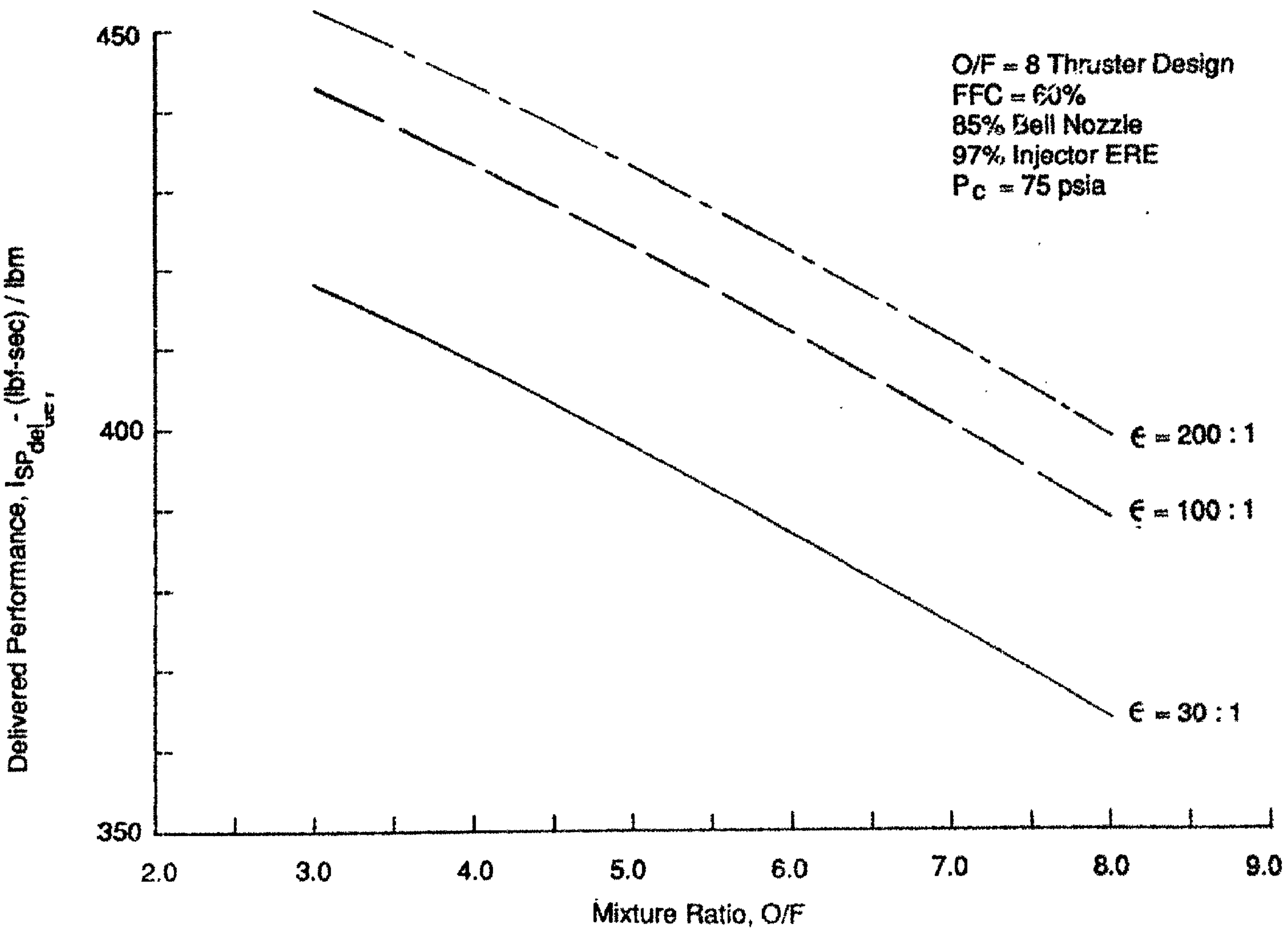

Figure 44. Effects of Nozzle Extensions on Delivered Performance

an optimized Rao contour (85 percent bell) with a potential flow expansion area ratio of 30:1. Figure 45 shows the machined chamber liner.

The sleeve insert was similar to the one for Thruster No. 1 pictured in Figure 18. This insert was designed to fit into the forward end of the thrust chamber. A flow-balancing washer divided the fuel ($GH_2$) flow that exits the chamber coolant channels between the injector (40 percent) and the sleeve (60 percent). The sleeve was machined from nickel (Ni-200) and had 30 axial slots milled on the outer diameter for regenerative cooling and axial FFC injection.

The integral igniter injector consisted of a machined stainless steel igniter body and a Ni-200 platelet injector. Propellant distribution and metering occurred within the photochemically machined flow passages of the individual injector platelets. These individual platelets were diffusion-bonded to form a homogeneous structure which became the injector. This injector was brazed to the igniter body to complete the assembly. Provisions were made within the igniter body to mount the spark plug, the chamber pressure transducer, the injector fuel and oxidizer manifold pressure transducers, and the oxidizer valve. Both propellant valves mounted directly to the thruster to minimize dribble volume for pulsing duty cycles. The cutaway of Thruster No. 2 was documented in Figure 36, the completed thrust chamber assembly in Figures 46 and 47.

## D. TEST

### 1. Test Setup

The Space Station Thruster No. 2 was assembled at Aerojet and shipped to NASA LeRC for altitude testing in their new low-thrust rocket engine facility. The thruster was mounted to a test stand within the LeRC facility designed to measure thrust. A water-cooled diffuser maintained the required nozzle back pressure to ensure that the thruster nozzle flowed full. Propellants were plumbed to the test cell from standard $GH_2$ and $GO_2$ trailers.

### 2. Instrumentation

The thruster test assembly was instrumented to measure thrust, propellant flowrates, inlet pressures and temperatures, coolant bulk temperature rise, and chamber internal (gasside) and external (backside) wall temperatures. There were thirty (30) thermocouples integral with the thrust chamber:

C1287 5153

Figure 45. Machined ZrCu Chamber Liner for Thruster No. 2

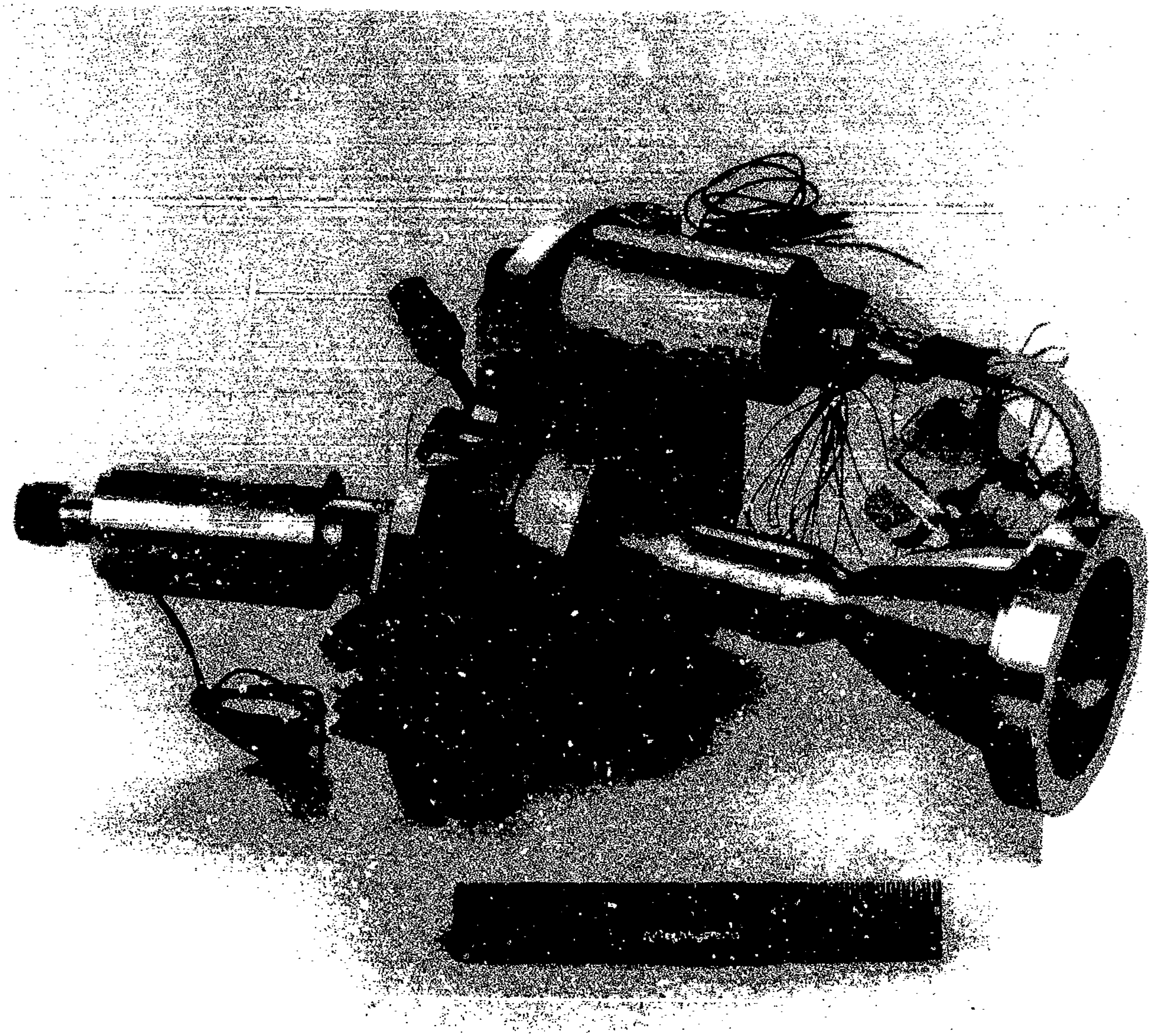

C1088 4

Figure 46. Thrust Chamber Assembly - Aft End

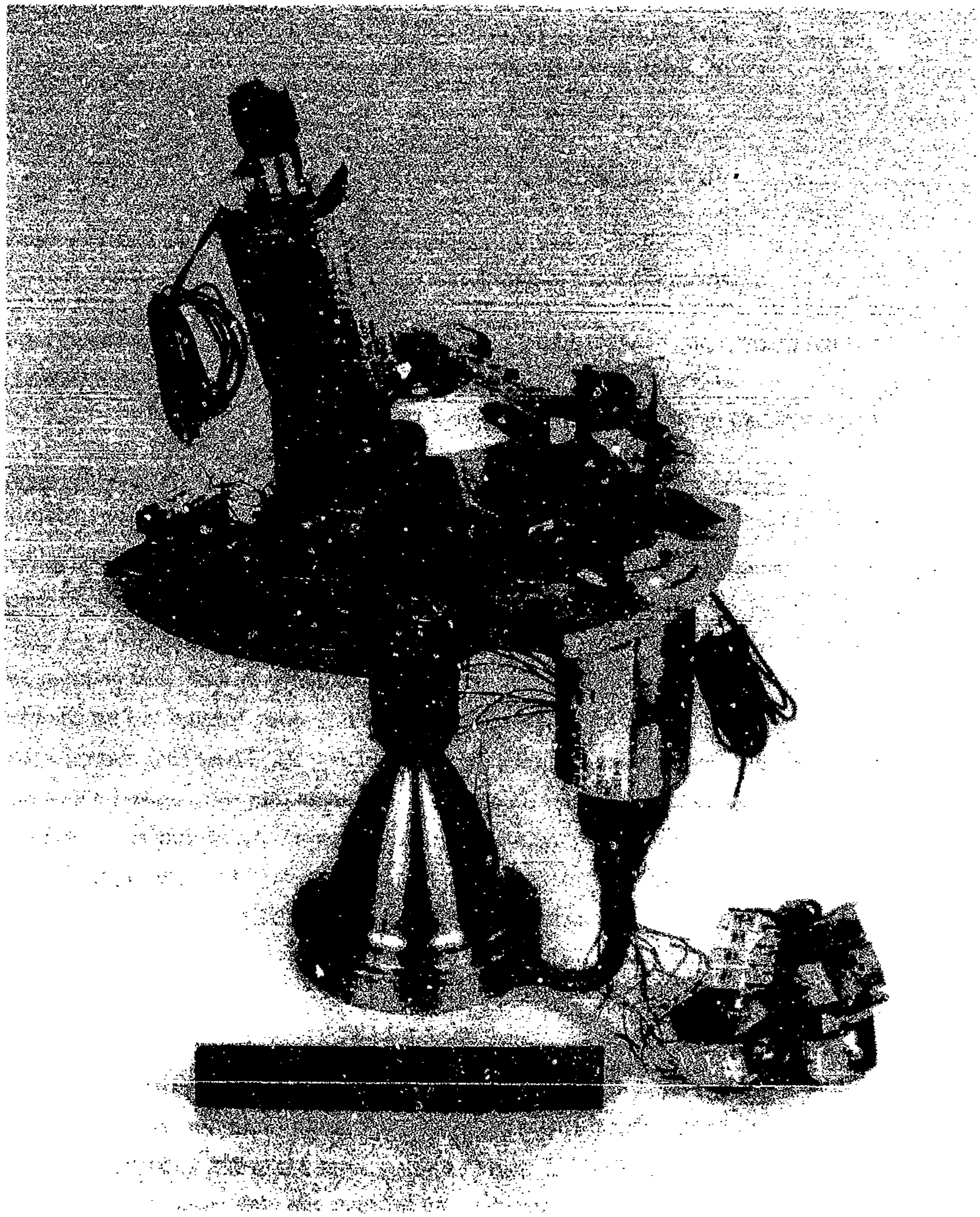

C1088 4620

Figure 47. Thrust Chamber Assembly - Head End

- four (4) fuel injector manifold (TFJ) thermocouples — one (1) was required, three (3) were redundant;
- twelve (12) chamber internal (gasside) wall (TCI) thermocouples — six (6) were required, six (6) were redundant;
- fourteen (14) chamber external (backside) wall (TCE) thermocouples — seven (7) were required, seven (7) were redundant.

Two additional thermocouples were added to the chamber external wall in the converging and throat regions after Test No. 041. The aforementioned test instrumentation is summarized in Table XI and depicted in the schematic of Figure 48.

Further definition of the thermocouple positions was provided by Figures 49, 50, 51 and 52. Figure 49 defined the axial positions of the thermocouples relative to datum $\boxed{\text{-A-}}$, these positions designated as Station Nos. 1 through 7. The external thermocouples added after Test No. 041, TCE-CNVRG and TCE-THRT, were included for reference. Figure 50 designated the thermocouple row assignments, i.e. Row A, Row B, Row C, and Row D. Rows A and C were identical, as were Rows B and D, thus providing redundancy as well as to guard against attrition during fabrication. The internal thermocouples (TCI) were located in four channels milled in between the cooling channels, as indicated in Figure 50. These four channels (Rows A through D) were documented in Figures 51 and 52. Thermocouples were brazed within these four channels prior to electroforming the nickel (EFNi) closeout. Axial station four (4) was common to all four rows to provide measurement of circumferential temperature variations. The thermocouples were designated by internal or external location (TCI or TCE), by axial station and by row, e.g. TCI-1A, TCE-4C, TCI-3B, etc.

### 3. Test Summary

Thruster No. 2 was given basic checkout testing at the NASA LeRC test facility during the summer of 1989. This testing covered a broad range of mixture ratio (O/F), but a narrow range of fuel film cooling (FFC), i.e., an O/F range from 3.0 to 9.5, and FFC's of 55.2, 60.9, and 64.2 percent. Tables XII and XIII summarized the tests run with regard to O/F and FFC, respectively.

## TABLE XI

## TEST INSTRUMENTATION
## SPACE STATION THRUSTER NO. 2

| Parameter | Mneumonic | Range |
|---|---|---|
| Pressure | | |
| Fuel Pressure, Tank | PFT | TBD |
| Oxid Pressure, Tank | POT | TBD |
| Fuel Pressure, Venturi Inlet | PFVI | TBD |
| Oxid Pressure, Venturi Inlet | POVI | TBD |
| Fuel Pressure, Thrust Chamber Valve Inlet | PFTCVI | 50 - 300 psia |
| Oxid Pressure, Thrust Chamber Valve Inlet | POTCVI | 50 - 300 psia |
| Fuel Pressure, Injector Manifold | PFJ(1) | 20 - 200 psia |
| Oxid Pressure, Injector Manifold | POJ(1) | 20 - 200 psia |
| Chamber Pressure | PC(1) | 15 - 150 psia |
| Thrust | | |
| Thrust, | F1 | 5 - 50 lbf |
| Redundant Thrust | F2 | 5 - 50 lbf |
| Temperature | | |
| Fuel Temp., Venturi Inlet | TFVI | TBD |
| Oxid Temp., Venturi Inlet | TOVI | TBD |
| Fuel Temp., Thrust Chamber Valve Inlet | TFTCVI | -260° - 70°F(2) |
| Oxid Temp., Thrust Chamber Valve Inlet | TOTCVI | -160° - 70°F(2) |
| Fuel Temp., Injector Manifold | TFJ(3) | 250° - 600°F(6) |
| Internal Chamber Wall Temp. | TCI(4) | 40° - 1000°F(6) |
| External Chamber Wall Temp. | TCE(5) | 40° - 1000°F(6) |

## TABLE XI

## TEST INSTRUMENTATION
## SPACE STATION THRUSTER NO. 2
(Continued)

| Parameter | Mneumonic | Range |
|---|---|---|
| **Electrical** | | |
| Current Trace, Fuel Thrust Chamber Valve | IFTCV | TBD |
| Current Trace, Oxid Thrust Chamber Valve | IOTCV | TBD |
| Voltage Trace, Fuel Thrust Chamber Valve | VFTCV | 0 - 32 Volts |
| Voltage Trace, Oxid Thrust Chamber Valve | VOTCV | 0 - 32 Volts |

---

(1) Ports for indicated pressures are integral with the thruster.
(2) Indicated temperature range is the design range; however, actual temperature range is facility dependent and will probably be limited to perhaps 40° to 70°F.
(3) Four TFJ thermocouples are integral with the thruster; however, only one is required (three are redundant).
(4) Twelve TCI thermocouples are integral with the chamber outside wall; however, only severn are required (seven are redundant).
(6) Indicated temperature ranges are estimates only.

Additional instrumentation may be required to monitor test cell pressure and temperature, load cell temperature, and other facility parameters. All thermocouples that are integral with the thruster are ANSI Type K (Chromel/Alumel) with a range of 32 to 2300°F.

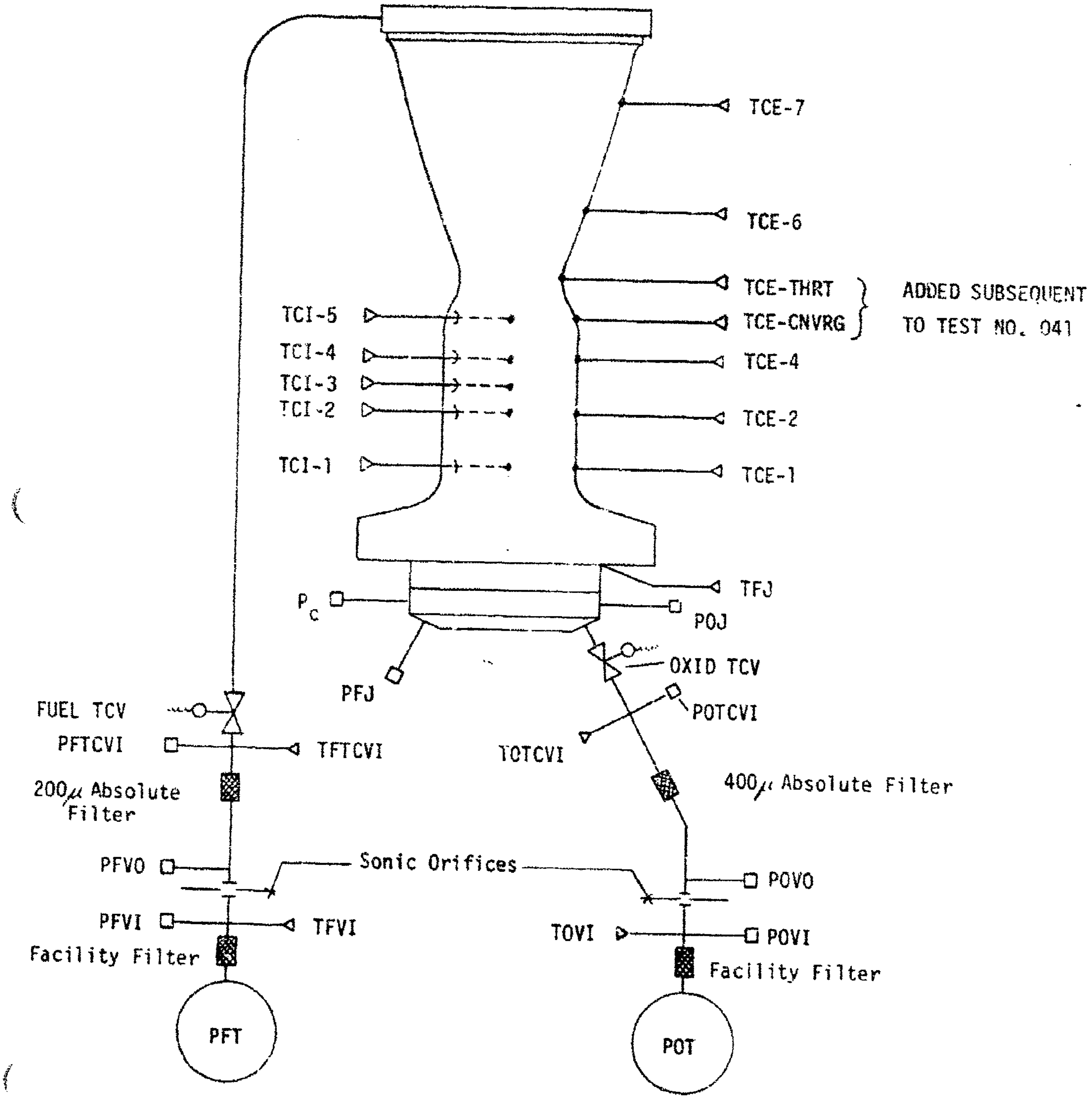
TCE-7
TCE-6
TCE-THRT
TCE-CNVRG
ADDED SUBSEQUENT TO TEST NO. 041
TCI-5
TCI-4
TCI-3
TCI-2
TCI-1
TCE-4
TCE-2
TCE-1
TFJ
$P_c$
POJ
PFJ
OXID TCV
FUEL TCV
POTCVI
PFTCVI
TFTCVI
TOTCVI
200μ Absolute Filter
400μ Absolute Filter
PFVO
Sonic Orifices
POVO
PFVI
TFVI
TOVI
POVI
Facility Filter
Facility Filter
PFT
POT

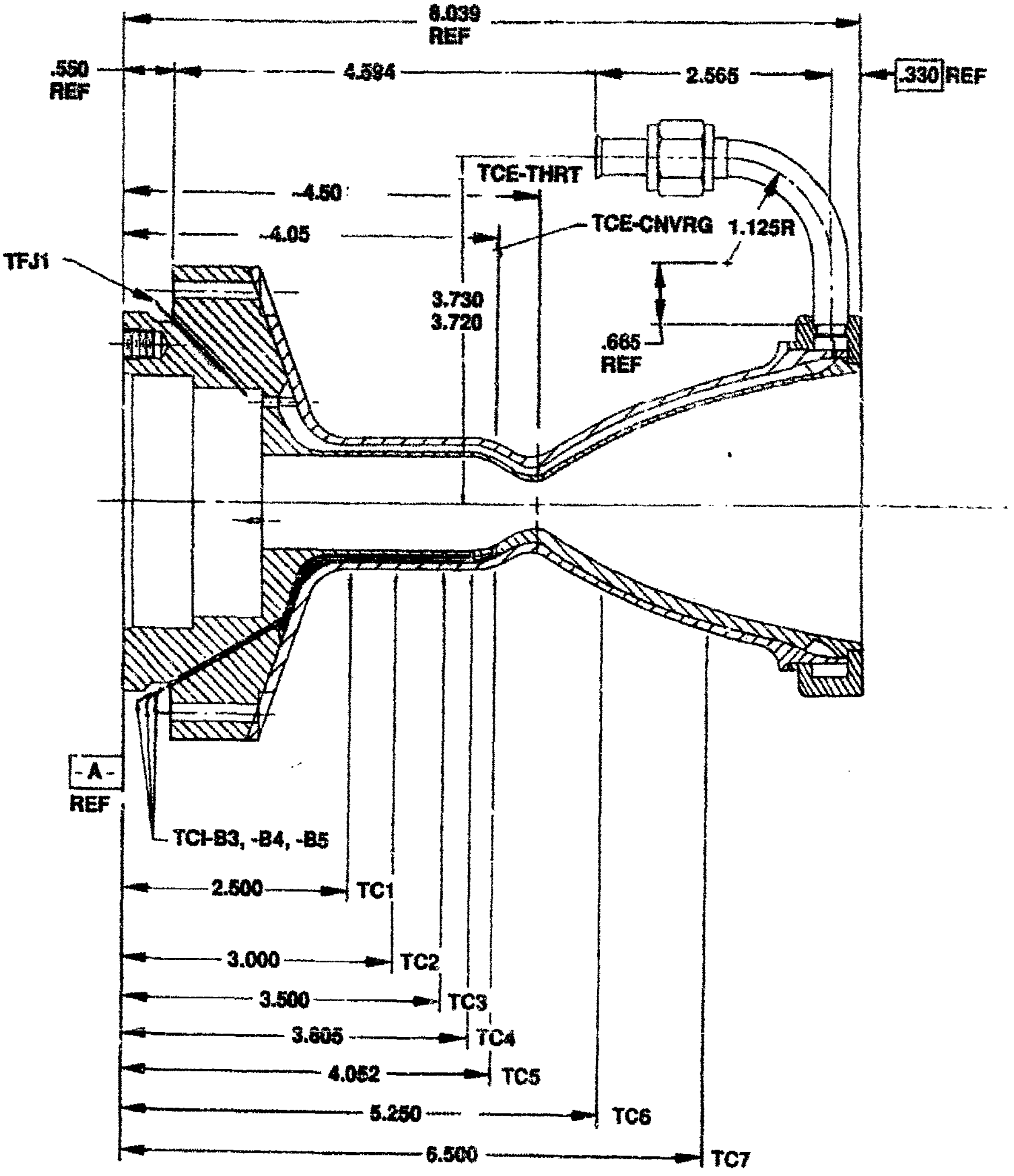

Thermocouple Axial Positions
Stations Nos. 1 Through 7

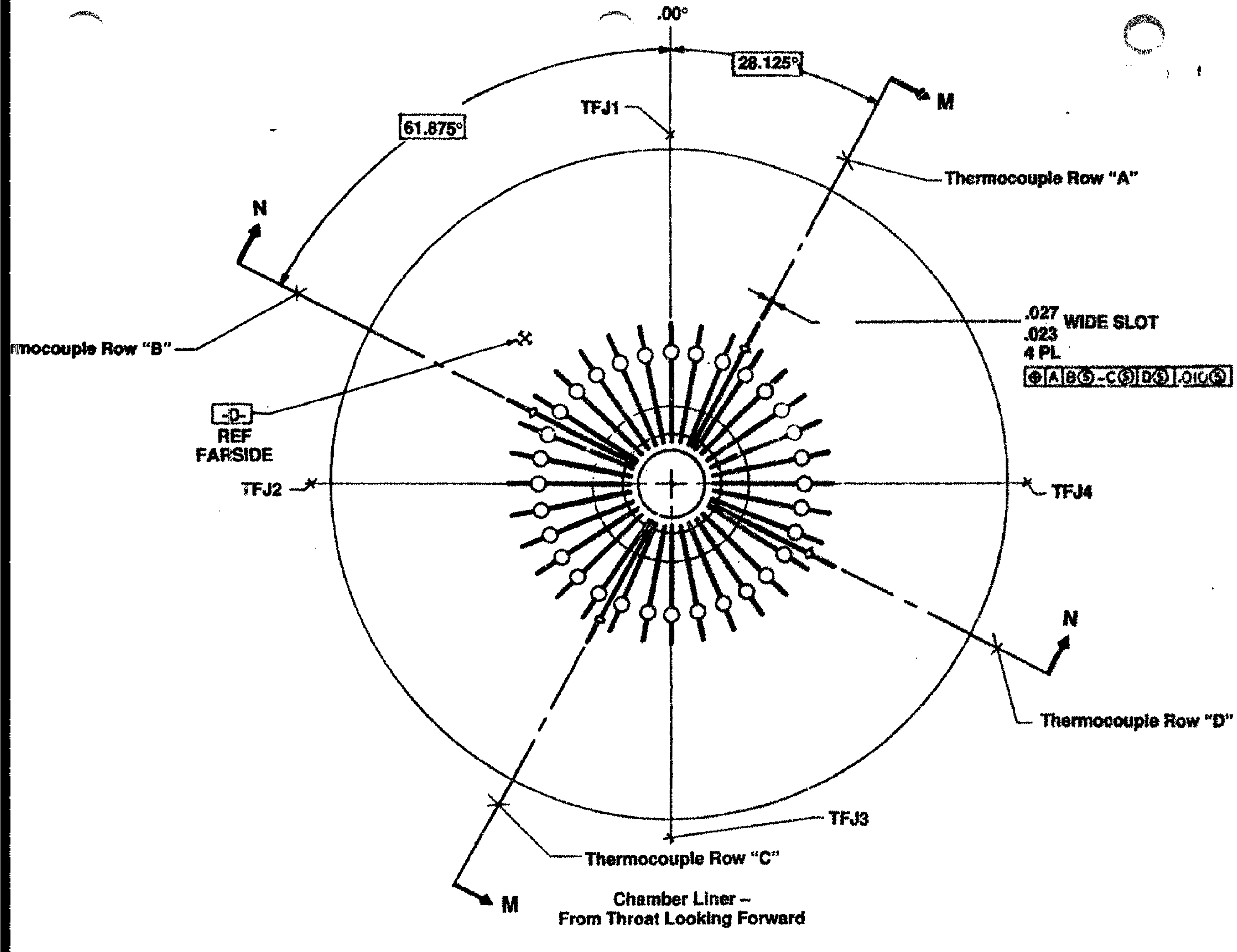

Figure 50. Internal Thermocouple (TCI) Row Designations

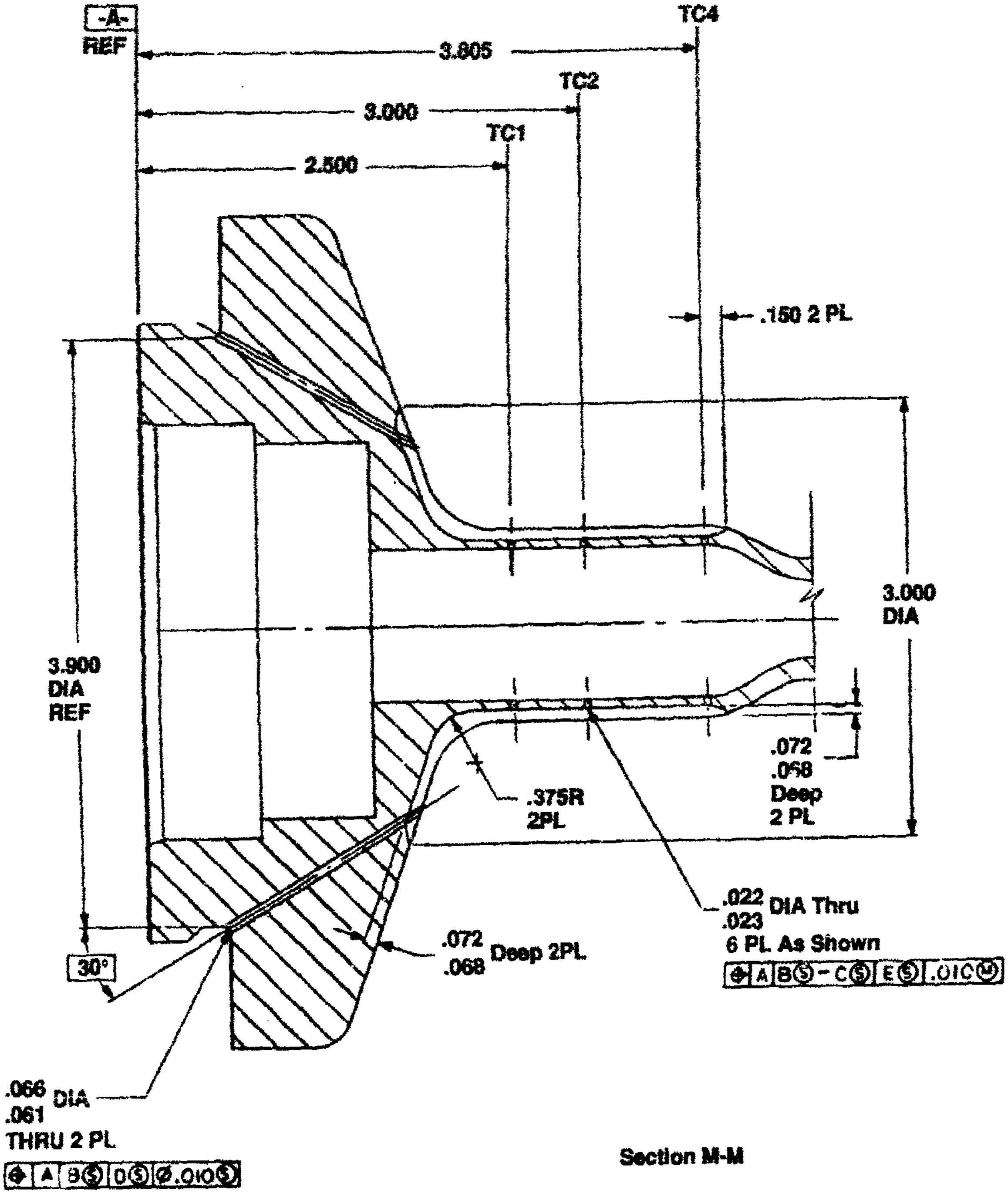
-A-
REF
TC4
3.805
TC2
3.000
TC1
2.500
.150 2 PL
3.000
DIA
3.900
DIA
REF
.072
.068
Deep
2 PL
.375R
2PL
.022
.023 DIA Thru
6 PL As Shown
⊕ A B Ⓢ - C Ⓢ E Ⓢ .010 Ⓜ
30°
.072
.068 Deep 2PL
.066
.061 DIA
THRU 2 PL
⊕ A B Ⓢ D Ⓢ Ø.010 Ⓢ

Section M-M

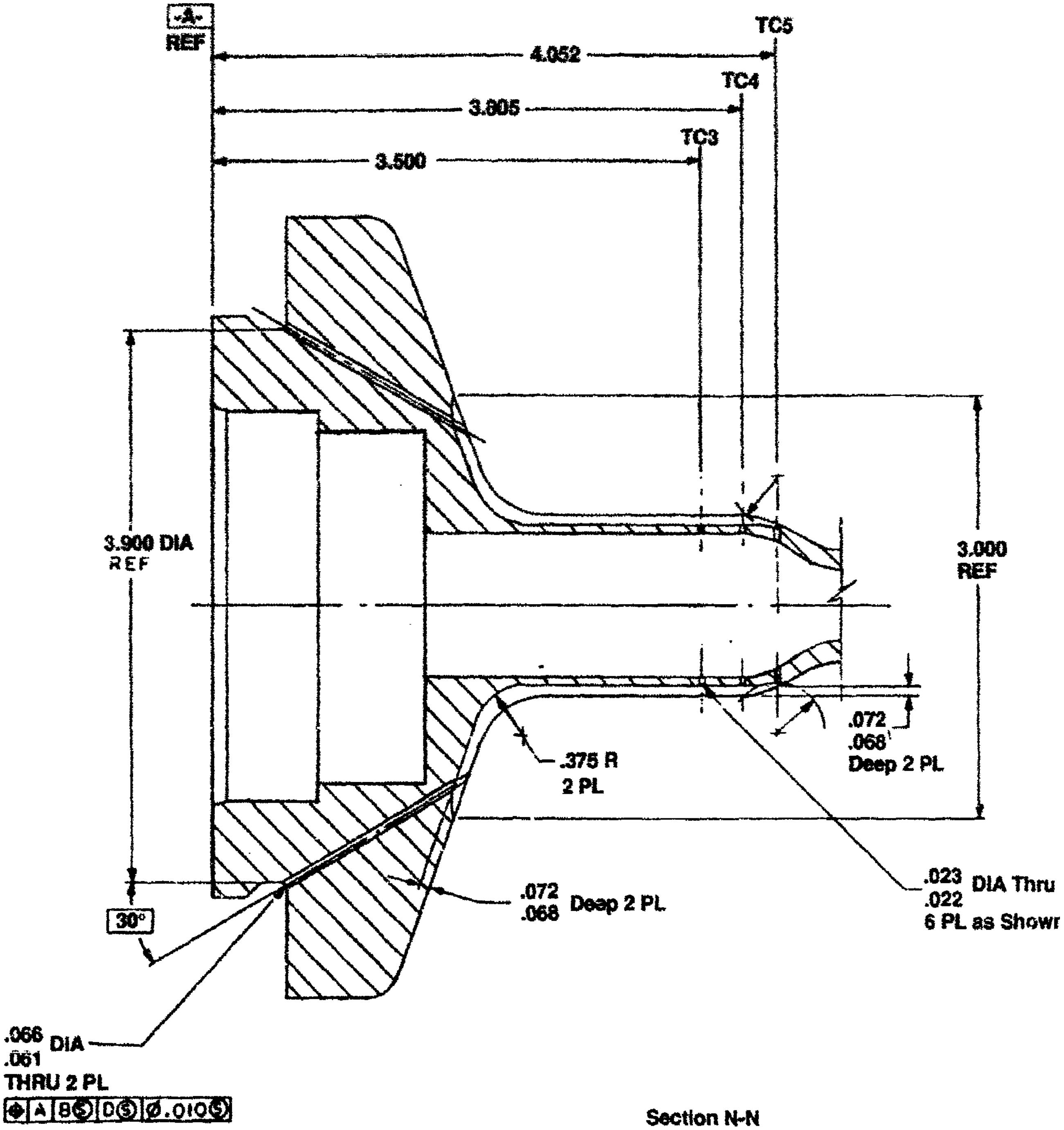

-A-
REF
TC5
4.052
TC4
3.805
TC3
3.500
3.900 DIA
REF
3.000
REF
.072
.068
Deep 2 PL
.375 R
2 PL
.023 DIA Thru
.022
6 PL as Showr
.072
.068 Deep 2 PL
30°
.066 DIA
.061
THRU 2 PL
⊕ | A | B(S) | D(S) | Ø.010(S)

Section N-N

## TABLE XII

## THRUSTER NO. 2 TEST SUMMARY
## FOR
## MIXTURE RATIO RANGE

| Mixture Ratio O/F | Total Duration (sec) | Total Impulse (lbf-sec) |
|---|---|---|
| 3.0 | 105 | 2,265 |
| 3.5 | 230 | 5,880 |
| 4.0 | 629 | 15,960 |
| 4.5 | 20 | 507 |
| 5.0 | 666 | 18,232 |
| 5.5 | 10 | 249 |
| 6.0 | 534 | 14,718 |
| 6.5 | 5 | 131 |
| 7.0 | 295 | 7,714 |
| 7.5 | 9 | 216 |
| 8.0 | 328 | 8,433 |
| 8.5 | 14 | 338 |
| 9.0 | — | — |
| 9.5 | 37 | 926 |
| Total: | 2,882 | 75,569 |

## TABLE XIII

## THRUSTER NO. 2 TEST SUMMARY
## FOR
## PERCENT FUEL FILM COOLING RANGE

| Fuel Film Cooling, FFC - (%) | Mixture Rato O/F | Total Duration, t-(sec) | Total Impulse, $I_t$-(lbf-sec) |
|---|---|---|---|
| 55.2 | 3.0 | 5 | 124 |
| | 3.5 | 85 | 2,106 |
| | 4.0 | 154 | 3,664 |
| | 5.0 | 148 | 4,234 |
| | 6.0 | 135 | 3,917 |
| | 7.0 | 65 | 1,802 |
| | 7.5 | 4 | 91 |
| | 8.0 | 84 | 2,014 |
| | 8.5 | 9 | 216 |
| 60.9 | 3.0 | 95 | 2,023 |
| | 3.5 | 140 | 3,644 |
| | 4.0 | 405 | 10,479 |
| | 4.5 | 15 | 381 |
| | 5.0 | 448 | 12,276 |
| | 5.5 | 10 | 249 |
| | 6.0 | 334 | 9,181 |
| | 6.5 | 5 | 131 |
| | 7.0 | 168 | 4,320 |
| | 7.5 | 5 | 125 |
| | 8.0 | 235 | 6,204 |
| | 8.5 | 5 | 122 |
| | 9.5 | 37 | 926 |
| 64.2 | 3.0 | 5 | 118 |
| | 3.5 | 5 | 130 |
| | 4.0 | 70 | 1,817 |
| | 4.5 | 5 | 126 |
| | 5.0 | 70 | 1,722 |
| | 6.0 | 65 | 1,620 |
| | 7.0 | 62 | 1,592 |
| | 8.0 | 9 | 215 |
| | Total: | 2,882 | 75,569 |

### 4. Experimental Results

The testing performed at NASA LeRC during the summer of 1989 consisted solely of limited checkout testing. Some initial ignition problems were caused by an improperly insulated high voltage cable, but these were ultimately resolved. In addition, the sealing surface at the injector/chamber interface was scratched while resolving the ignition problem, resulting in below normal performance measurements due to slight $GH_2$ leakage during a number of tests, occurred. As a result, the number of tests providing a true view of the Thruster No. 2 operation were fewer than desired, but sufficient to determine its operating characteristics. Tests were conducted over mixture ratios ranging from 2.86 to 9.47 at fuel film cooling (FFC) percentages of 55.2, 64.2 and 60.9. Due to the aforementioned $GH_2$ leakage, the tests for FFC's of 55.2 and 64.2 percent were suspect as performance measurements were too low. Tests at 60.9 percent FFC with and without $GH_2$ leakage showed a consistent trend.

The measured thruster performance for 60.9 percent FFC at a nominal chamber pressure of 75.0 psia followed the predicted performance within 1 to 2 percent from a mixture ratio of 3.0 to 8.0, as shown in Figure 53. The line for the predicted values was for an assumed injector energy release efficiency (ERE) of 97 percent. The maximum ERE determined for Thruster No. 1 was 96.1 percent. Using this ERE value for predicting performance resulted in Figure 54, where the predicted and the measured performance coincided over the range of mixture ratio from 3.0 to 8.0.

Unlike the performance data, the measured thermal data did not closely follow the prediction. The trend was right, but the magnitude was high by about 200°F for the gas-side wall. In addition, the ΔT through the chamber wall appeared to be less than the predicted 100°F. These comparisons were depicted in Figure 55. Although the wall temperature was higher, the fact that the ΔT was lower indicated an even greater low cycle fatigue (LCF) life available; however, the LCF was already in excess of 10,000 cycles for a predicted ΔT of 100°F.

## E. EVALUATION OF RESULTS

Since Space Station Thruster No. 2 had a significant number of thermocouples (T/C) for taking gas-side and back-side wall temperature data, as well as coolant bulk temperature rise, calibration of the thermal model was performed. The thruster was instrumented with 12 gas-side

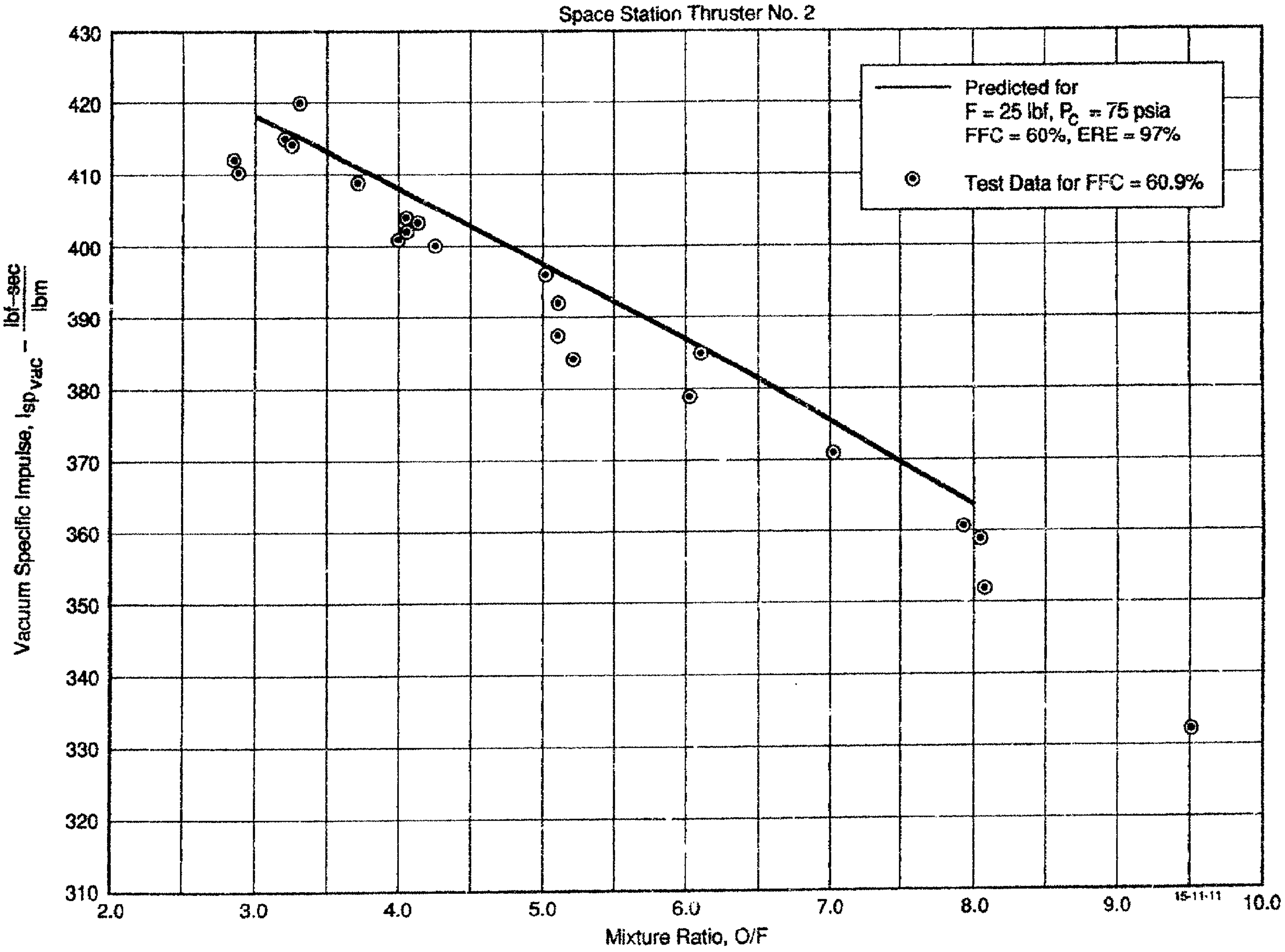

Figure 53. Predicted Vs. Measured Performance for an Assumed Injector ERE of 97.0%

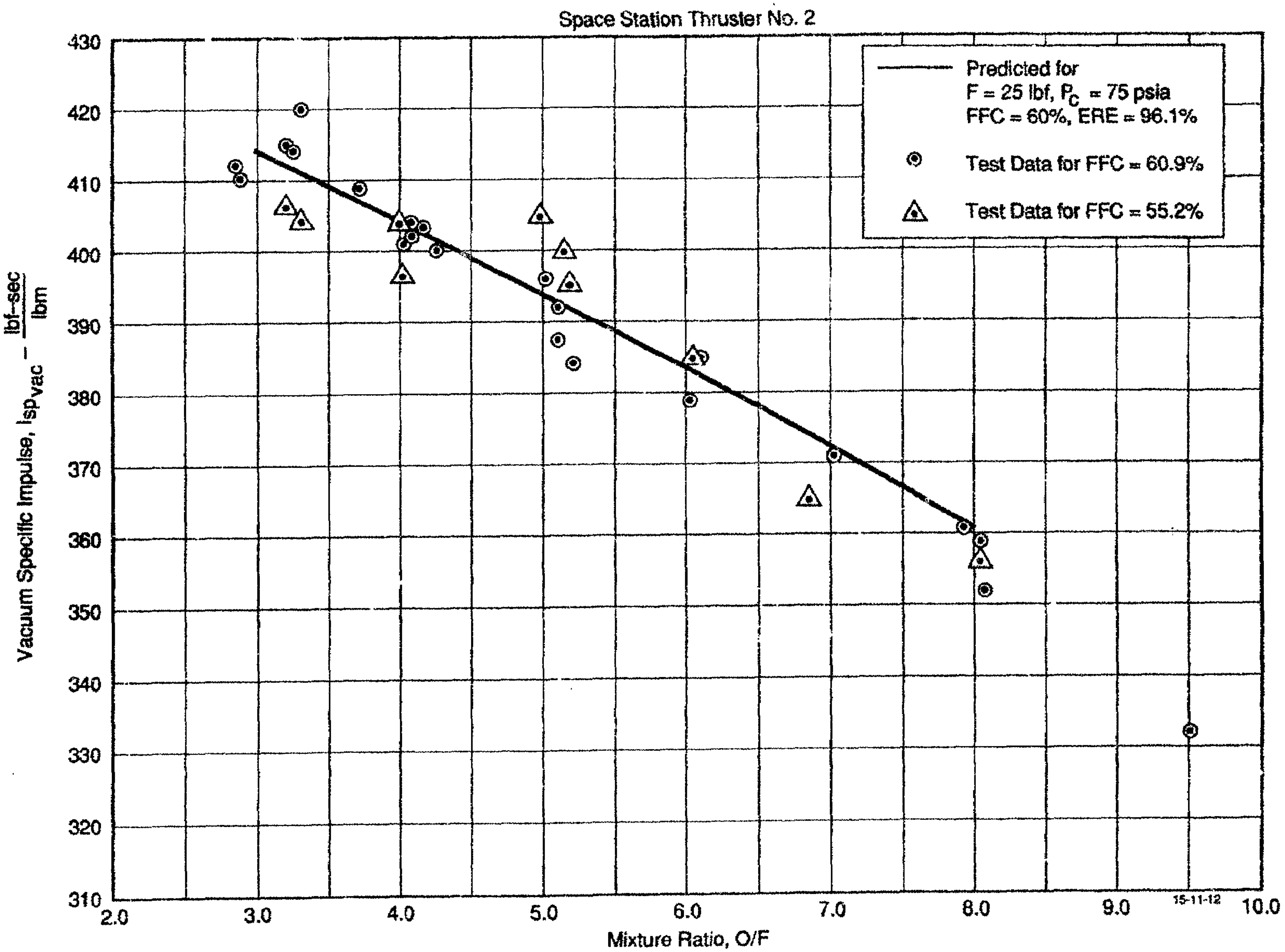

**Figure 54. Predicted Vs. Measured Performance for an Assumed Injector ERE of 96.1%**

Pretest Predicted vs Measured Wall Temperatures
(Earlier Model @ Nominal Conditions)
Pretest Thermal Model @ Nominal (Design Point) Conditions

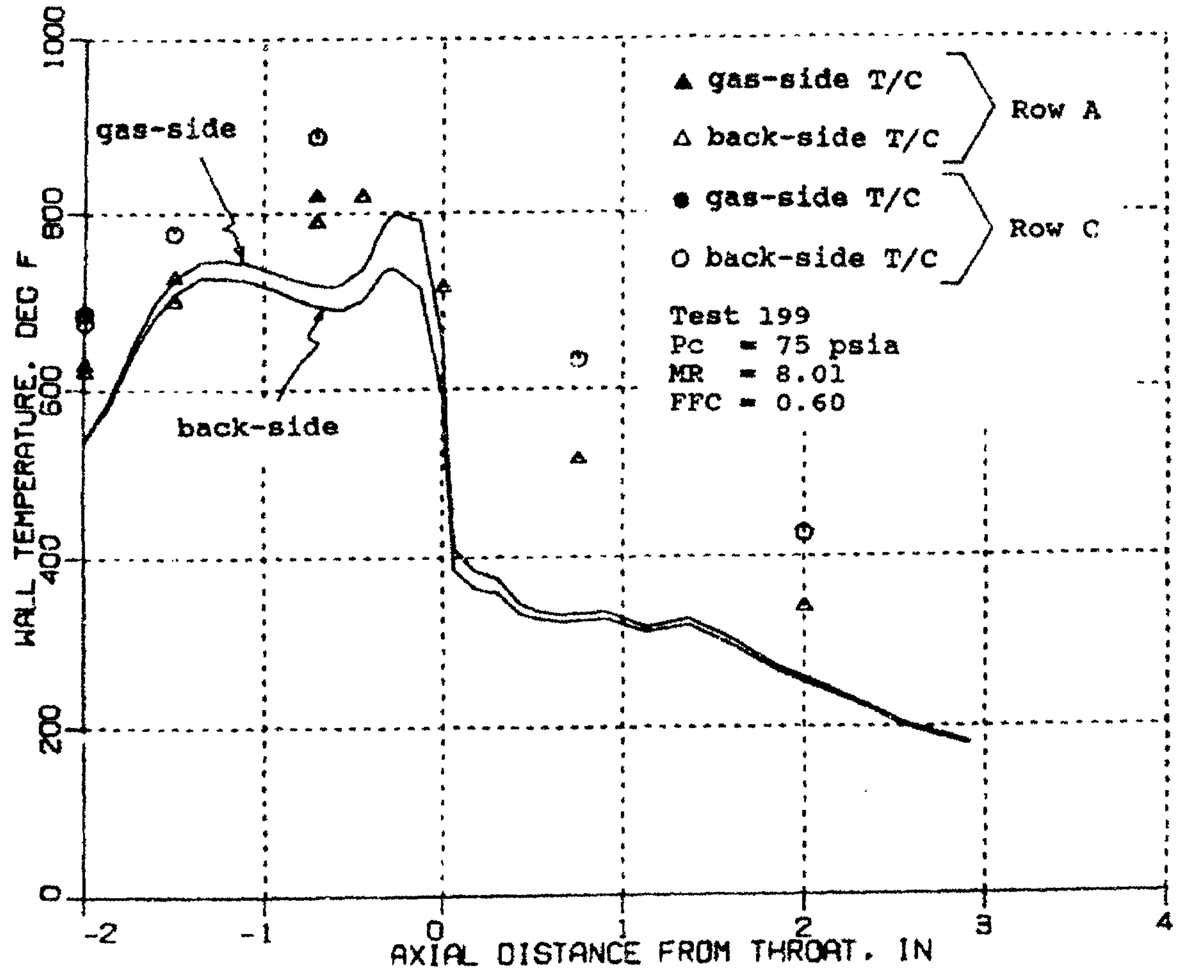

Figure 55. Measured vs Predicted Wall Temperatures at the Design Point

thermocouples and 18 back-side thermocouples scattered over a grid of 7 axial stations and 4 circumferential positions, as shown in Figure 56, where axial station 1 corresponds to the end of the film coolant sleeve insert. Steady state data from five tests (Test No. 166, 193, 199, 207, and 227) were chosen to define representative wall temperatures over a wide range of mixture ratio. Tables XIV to XVIII present the test data summary for these five tests. Due to the scarcity of gas-side thermocouples, the back-side thermocouple data was used to calibrate and validate the model. Since the heat flux is low and the wall is made of copper, the difference in temperature between the gas-side and back-side is also low. The highest back-side temperatures were recorded along row C and the lowest along row A, which is on the other side. Row A has a back-side thermocouple measurement on all 7 axial positions, while row C has all but the convergent section and throat measurements. Since it was desirable to calibrate to the hottest row, the two missing measurements in row C were estimated from row A, as graphically illustrated in Figures 57 to 61 for the five tests.

Back-side wall temperature measurements from row C were used to calibrate the thermal model. The model was calibrated to the nominal conditions of 75 psia chamber pressure, a mixture ratio of 8 and 60% fuel film cooling, which were the conditions achieved in Test 199. The calibration was first performed for an entrainment multiplier, Km, of 5.0, which was used for pretest predictions in an earlier model. This Km value is based on the test data correlation of the JPL thruster. However, it was found that a Km of 2.2 gave a better fit of the head end data, as shown in Figure 62. The Cgn profile for the calibrated model at both Km values is shown in Figure 63. The Cgn value is 0.9 in the barrel, 0.6 in the throat, and 1.1 in the nozzle for the Km of 5.0 model. The Cgn value is 1.3 in the barrel, 0.8 in the throat, and 1.1 in the nozzle for the Km of 2.2 model. The slower mixing model, Km of 2.2, requires higher Cgn values upstream of the throat to account for the lower wall mixture ratio. However, downstream of the throat, the wall mixture ratio for both Km values is high enough as to produce similar heat fluxes, thus giving the same Cgn value. The predicted stream tube mixture ratios are shown in Figure 64 for both Km values. The corresponding adiabatic wall temperatures are shown in Figure 65.

Four tests were used to validate the calibrated model at off-nominal conditions. Three tests (Test Nos. 193, 207, and 227) were at off-nominal mixture ratio conditions (MR = 3 - 10) and one test (Test No. 166) was at an off-nominal fuel film cooling condition (55% FFC). Figures 66 to 69 show that the slower mixing model, Km of 2.2, predicts the measured back-side wall temperatures much better than the faster mixing model, Km of 5.0, for all three off-mixture ratio tests. The slower mixing model also predicts the slope of wall temperature profile in the

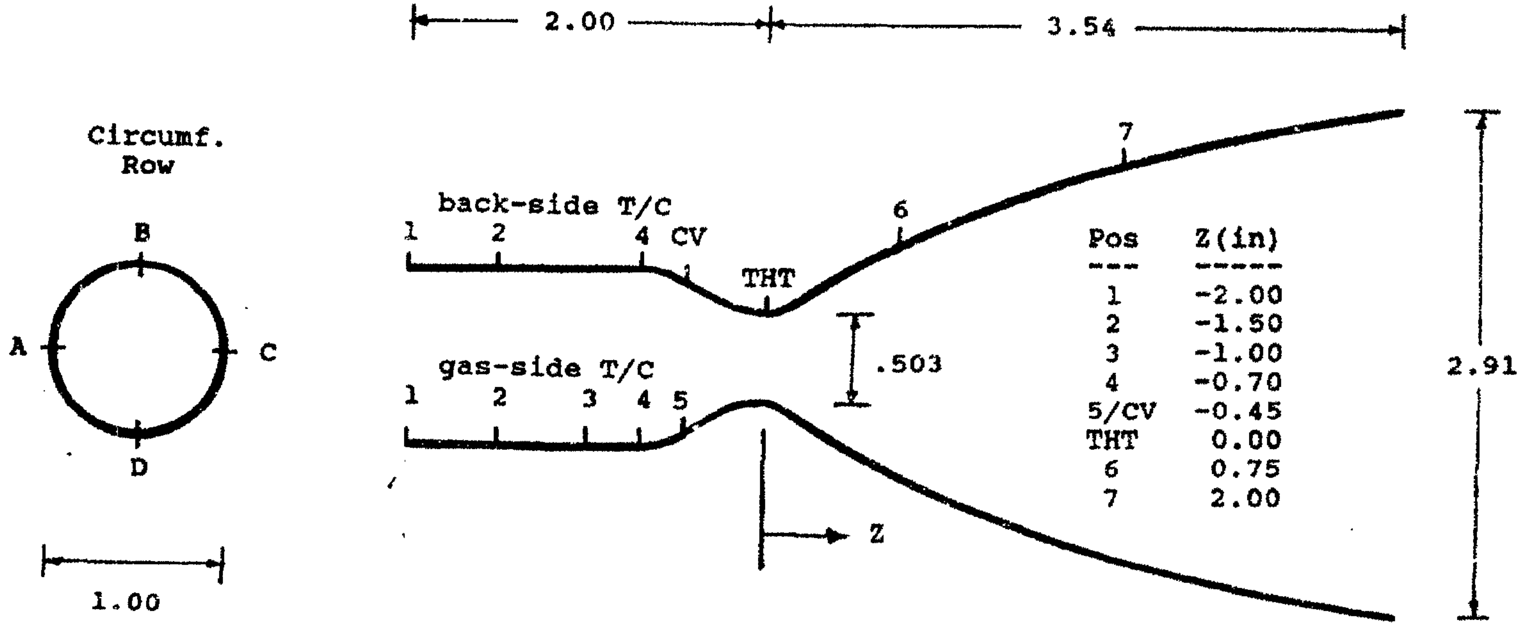

| Pos | Z(in) |
|---|---|
| 1 | -2.00 |
| 2 | -1.50 |
| 3 | -1.00 |
| 4 | -0.70 |
| 5/CV | -0.45 |
| THT | 0.00 |
| 6 | 0.75 |
| 7 | 2.00 |

Figure 56. Thermocouple Grid Position

## TABLE XIV
## TEST DATA SUMMARY FOR TEST NO. 166

Test 166
--------

t = 47.4 sec
F = 26.66 lb
Pc = 75 psia
MR = 8.02
Isp = 355.9 sec
Wt = .0749 lb/sec
Pcool = 105 psia (inlet)
80 psia (outlet)
Tcool = 78 deg F (inlet)
599 deg F (outlet)
FFC=.55

ΔTsl = 297 deg F (Est.)
Tsl = 599 + 297 = 896 deg F
RHOC = .0104 lb/ft3
RHOE = .0285 lb/ft3
UCUE = 1.11
MUSC = .918E-06 lb/in-sec

GAS-SIDE T/C

| Axial Pos | Circumferential Pos A | B | C | D |
|---|---|---|---|---|
| 1 | 687 | - | 736 | - |
| 2 | 808 | - | - | - |
| 3 | - | 929 | - | 932 |
| 4 | 919 | 713 | - | 945 |
| 5 | - | 995 | - | 1005 |

BACK-SIDE T/C

| Axial Pos | Circumferential Pos A | B | C | D |
|---|---|---|---|---|
| 1 | 676 | 698 | 705 | 717 |
| 2 | 775 | 805 | 839 | 817 |
| 4 | 882 | 914 | 954 | 922 |
| CV | 910 | - | - | - |
| THT | 856 | - | - | - |
| 6 | 566 | - | 616 | - |
| 7 | 368 | - | 437 | - |

Row C Estimate from Row A T/C
-----------------------------

CV = 984 deg F
THT = 926 deg F

# TABLE XV
# TEST DATA SUMMARY FOR TEST NO. 193

Test 193

t = 59.9 sec
F = 28.54 lb
Pc = 79 psia
MR = 5.12
Isp = 392.0 sec
Wt = .0728 lb/sec
Pcool = 129 psia (inlet)
86 psia (outlet)
Tcool = 85 deg F (inlet)
382 deg F (outlet)
FFC=.60

ΔTsl = 234 deg F (Est.)
Tsl = 382 + 234 = 616 deg F
RHOC = .0138 lb/ft3
RHOE = .0248 lb/ft3
UCUE = 1.22
MUSC = .785E-06 lb/in-sec

GAS-SIDE T/C

| Axial | Circumferential Pos | | | |
|---|---|---|---|---|
| Pos | A | B | C | D |
| 1 | 412 | - | 442 | - |
| 2 | 490 | - | - | - |
| 3 | - | 561 | - | 574 |
| 4 | 529 | 539 | - | 567 |
| 5 | - | 573 | - | 590 |

BACK-SIDE T/C

| Axial | Circumferential Pos | | | |
|---|---|---|---|---|
| Pos | A | B | C | D |
| 1 | 404 | 423 | 436 | 438 |
| 2 | 460 | 481 | 510 | 496 |
| 4 | 503 | 527 | 577 | 543 |
| CV | 515 | - | - | - |
| THT | 477 | - | - | - |
| 6 | 333 | - | 378 | - |
| 7 | 233 | - | 320 | - |

Row C Estimate from Row A T/C

CV = 596 deg F
THT = 550 deg F

# TABLE XVI
# TEST DATA SUMMARY FOR TEST NO. 199

Test 199

t = 59.5 sec
F = 27.81 lb
Pc = 75 psia
MR = 8.01
Isp = 358.8 sec
Wt = .0775 lb/sec
Pcool = 105 psia (inlet)
79 psia (outlet)
Tcool = 86 deg F (inlet)
580 deg F (outlet)
FFC=.60

ΔTsl = 258 deg F (Est.)
Tsl = 580 + 258 = 838 deg F
RHOC = .0109 lb/ft3
RHOE = .0304 lb/ft3
UCUE = 1.24
MUSC = .890E-06 lb/in-sec

GAS-SIDE T/C

| Axial | Circumferential Pos | | | |
|---|---|---|---|---|
| Pos | A | B | C | D |
| 1 | 631 | - | 687 | - |
| 2 | 728 | - | - | - |
| 3 | - | 834 | - | 861 |
| 4 | 819 | 663 | - | 868 |
| 5 | - | 893 | - | 922 |

BACK-SIDE T/C

| Axial | Circumferential Pos | | | |
|---|---|---|---|---|
| Pos | A | B | C | D |
| 1 | 622 | 643 | 677 | 671 |
| 2 | 701 | 728 | 777 | 759 |
| 4 | 790 | 819 | 884 | 848 |
| CV | 818 | - | - | - |
| THT | 717 | - | - | - |
| 6 | 517 | - | 634 | - |
| 7 | 342 | - | 427 | - |

Row C Estimate from Row A T/C

CV = 918 deg F
THT = 822 deg F

# TABLE XVII
# TEST DATA SUMMARY FOR TEST NO. 207

Test 207

t = 59.6 sec
F = 25.40 lb
Pc = 72 psia
MR = 3.26
Isp = 414.3 sec
Wt = .0613 lb/sec
Pcool = 145 psia (inlet)
82 psia (outlet)
Tcool = 89 deg F (inlet)
294 deg F (outlet)
FFC=.60

ΔTsl = 211 deg F (Est.)
Tsl = 294 + 211 = 505 deg F
RHOC = .0140 lb/ft3
RHOE = .0174 lb/ft3
UCUE = 1.27
MUSC = .730E-06 lb/in-sec

GAS-SIDE T/C

| Axial Pos | Circumferential Pos A | B | C | D |
|---|---|---|---|---|
| 1 | 304 | - | 323 | - |
| 2 | 379 | - | - | - |
| 3 | - | 460 | - | 459 |
| 4 | 433 | 426 | - | 427 |
| 5 | - | 423 | - | 426 |

BACK-SIDE T/C

| Axial Pos | Circumferential Pos A | B | C | D |
|---|---|---|---|---|
| 1 | 299 | 311 | 313 | 317 |
| 2 | 336 | 350 | 360 | 353 |
| 4 | 368 | 383 | 397 | 390 |
| CV | 367 | - | - | - |
| THT | 327 | - | - | - |
| 6 | 234 | - | 266 | - |
| 7 | 180 | - | 233 | - |

Row C Estimate from Row A T/C

CV = 396 deg F
THT = 357 deg F

# TABLE XVIII
# TEST DATA SUMMARY FOR TEST NO. 227

Test 227

t = 31.6 sec
F = 25.34 lb
Pc = 71 psia
MR = 9.47
Isp = 331.6 sec
Wt = .0764 lb/sec
Pcool = 95 psia (inlet)
73 psia (outlet)
Tcool = 88 deg F (inlet)
595 deg F (outlet)
FFC=.60

ΔTsl = 266 deg F (Est.)
Tsl = 595 + 266 = 861 deg F
RHOC = .0101 lb/ft3
RHOE = .0314 lb/ft3
UCUE = 1.18
MUSC = .901E-06 lb/in-sec

GAS-SIDE T/C

| Axial Pos | Circumferential Pos | | | |
|---|---|---|---|---|
| | A | B | C | D |
| 1 | 704 | - | 754 | - |
| 2 | 825 | - | - | - |
| 3 | - | 934 | - | 975 |
| 4 | 937 | 805 | - | 986 |
| 5 | - | 1002 | - | 1044 |

BACK-SIDE T/C

| Axial Pos | Circumferential Pos | | | |
|---|---|---|---|---|
| | A | B | C | D |
| 1 | 693 | 708 | 726 | 746 |
| 2 | 799 | 817 | 868 | 858 |
| 4 | 907 | 925 | 996 | 964 |
| CV | 934 | - | - | - |
| THT | 885 | - | - | - |
| 6 | 593 | - | 665 | - |
| 7 | 388 | - | 488 | - |

Row C Estimate from Row A T/C

CV =1028 deg F
THT = 976 deg F

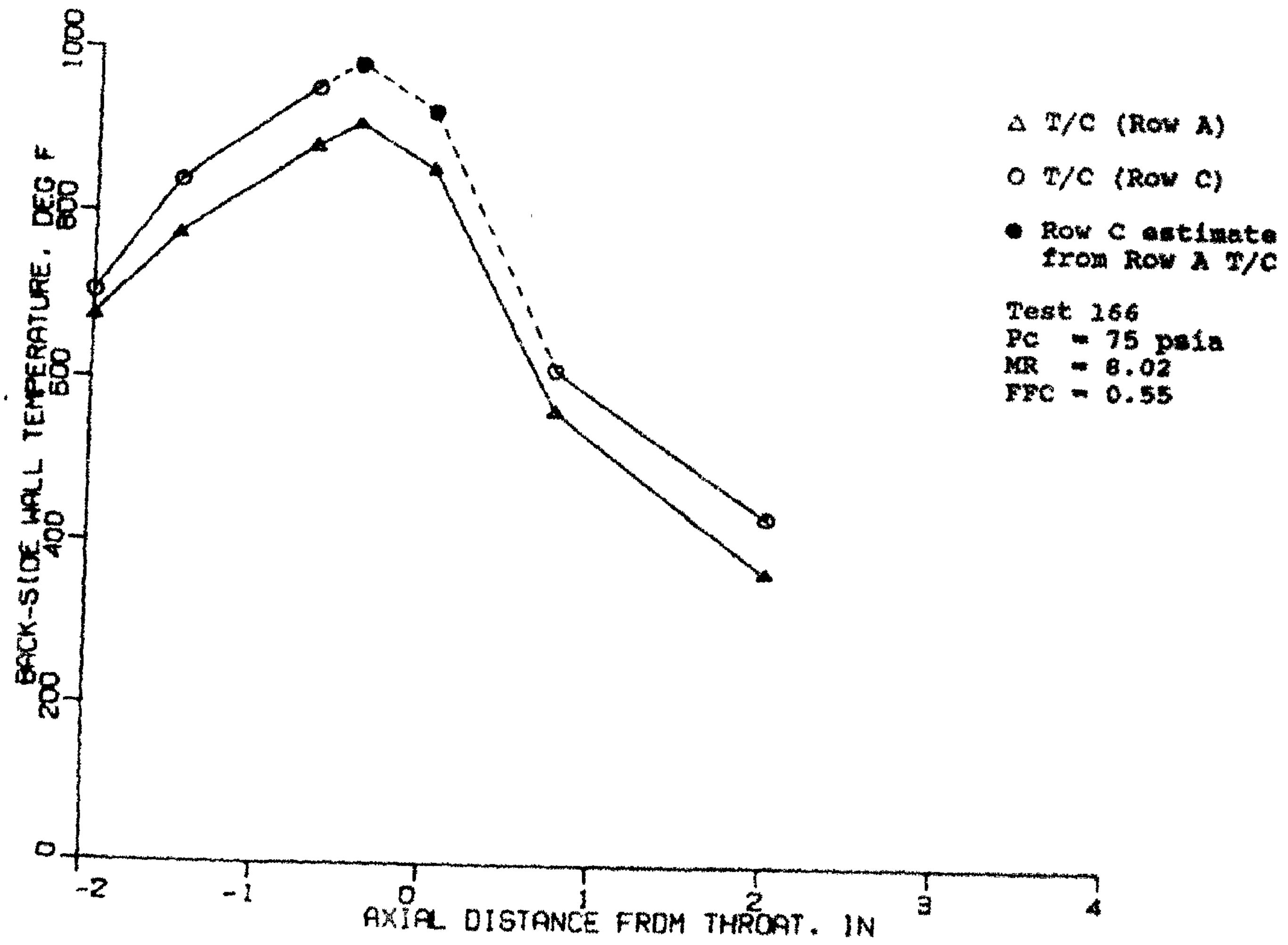

Figure 57. Measured Back-Side Wall Temperatures for Test No. 166

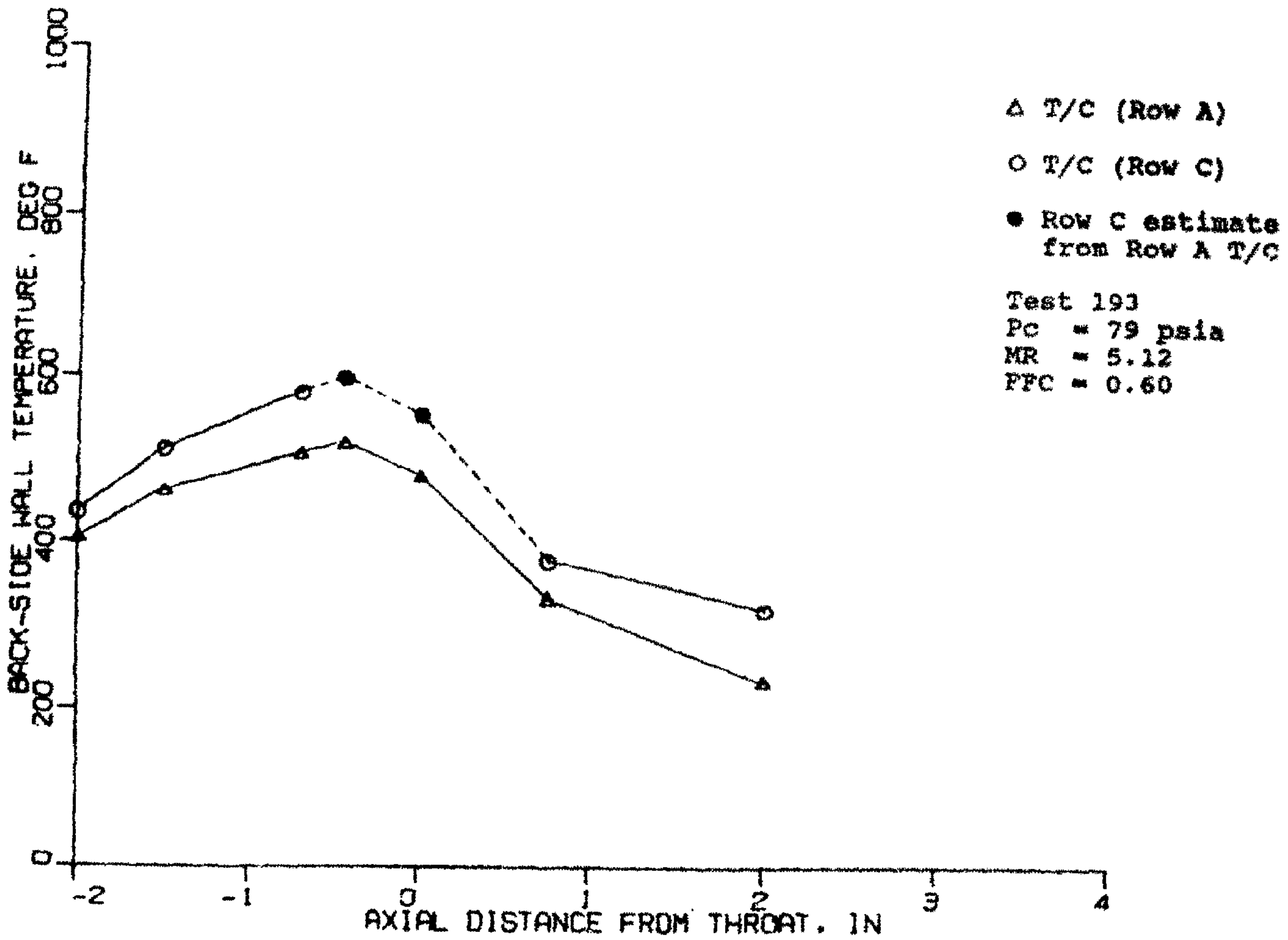

Figure 58. Measured Back-Side Wall Temperatures for Test No. 193

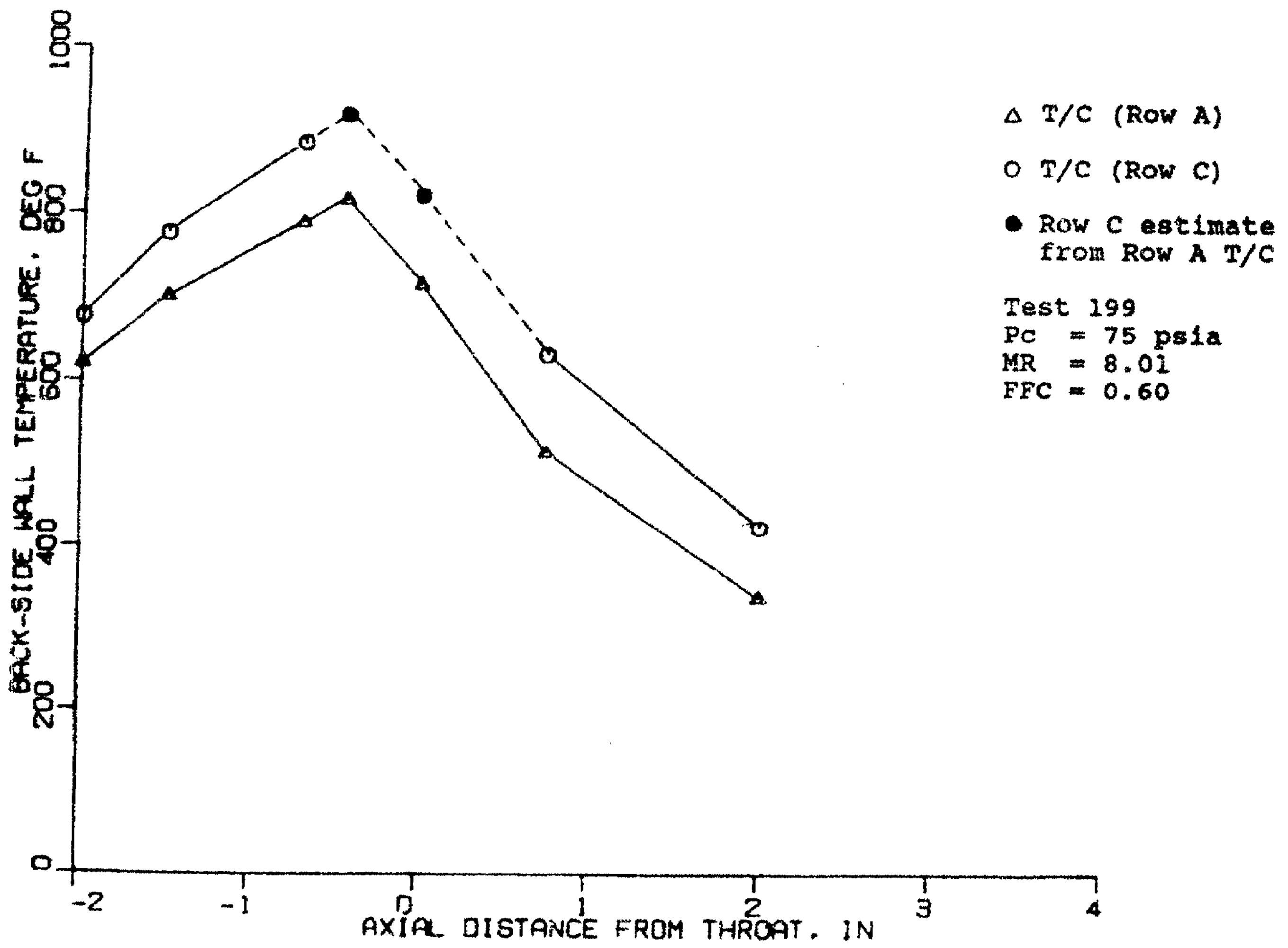

Figure 59. Measured Back-Side Wall Temperatures for Test No. 199

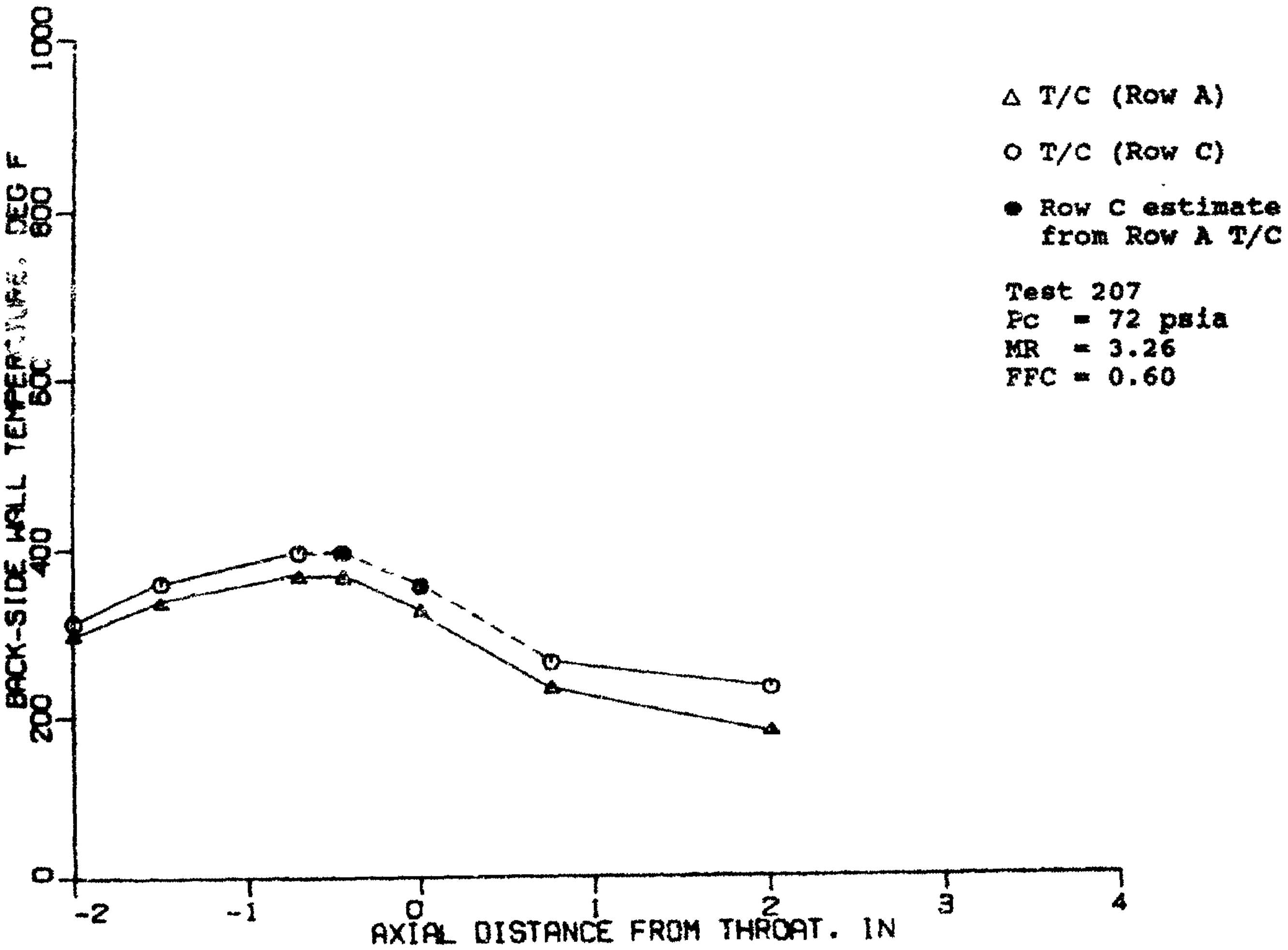

Figure 60. Measured Back-Side Wall Temperatures for Test No. 207

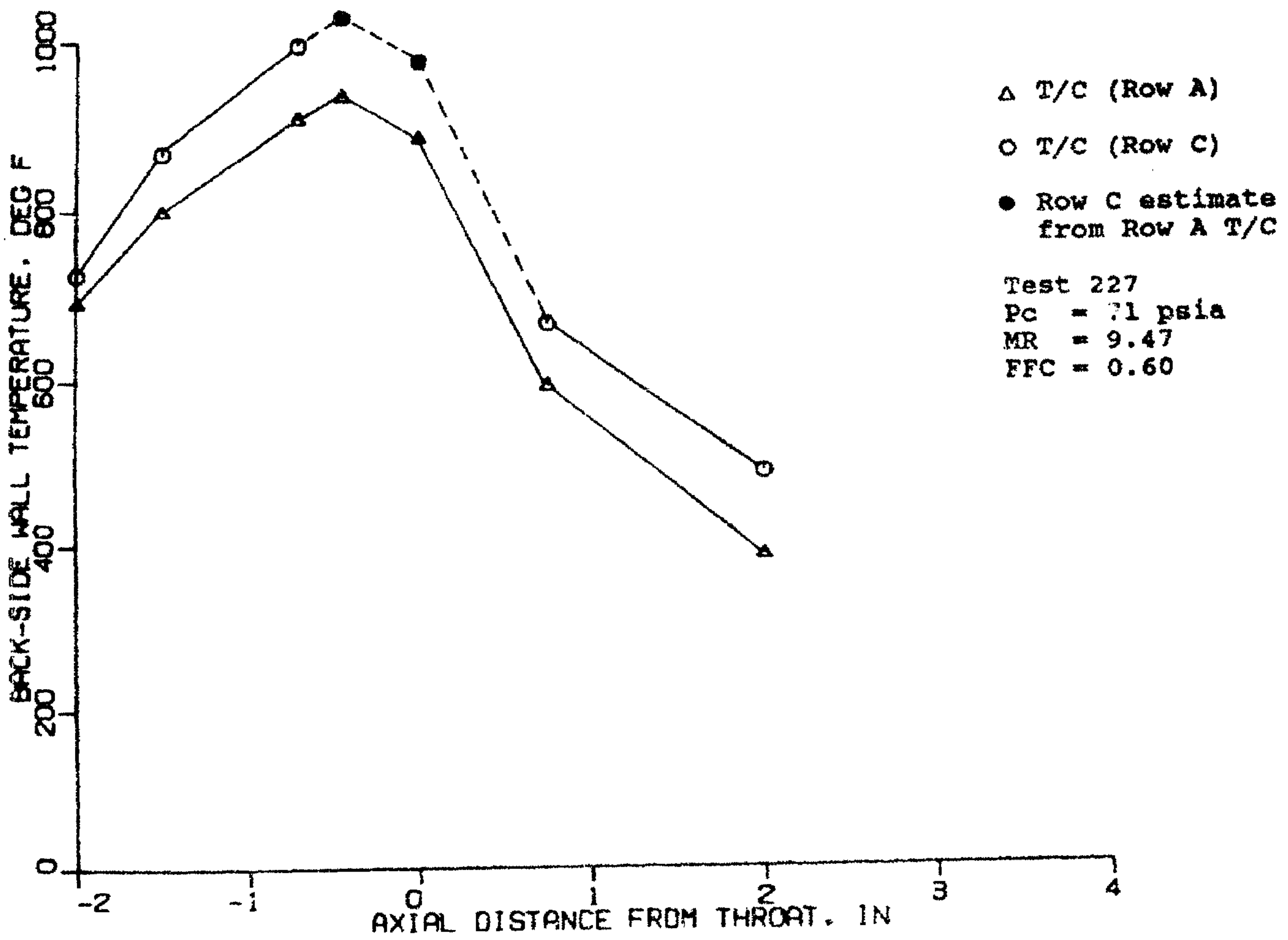

Figure 61. Measured Back-Side Wall Temperatures for Test No. 227

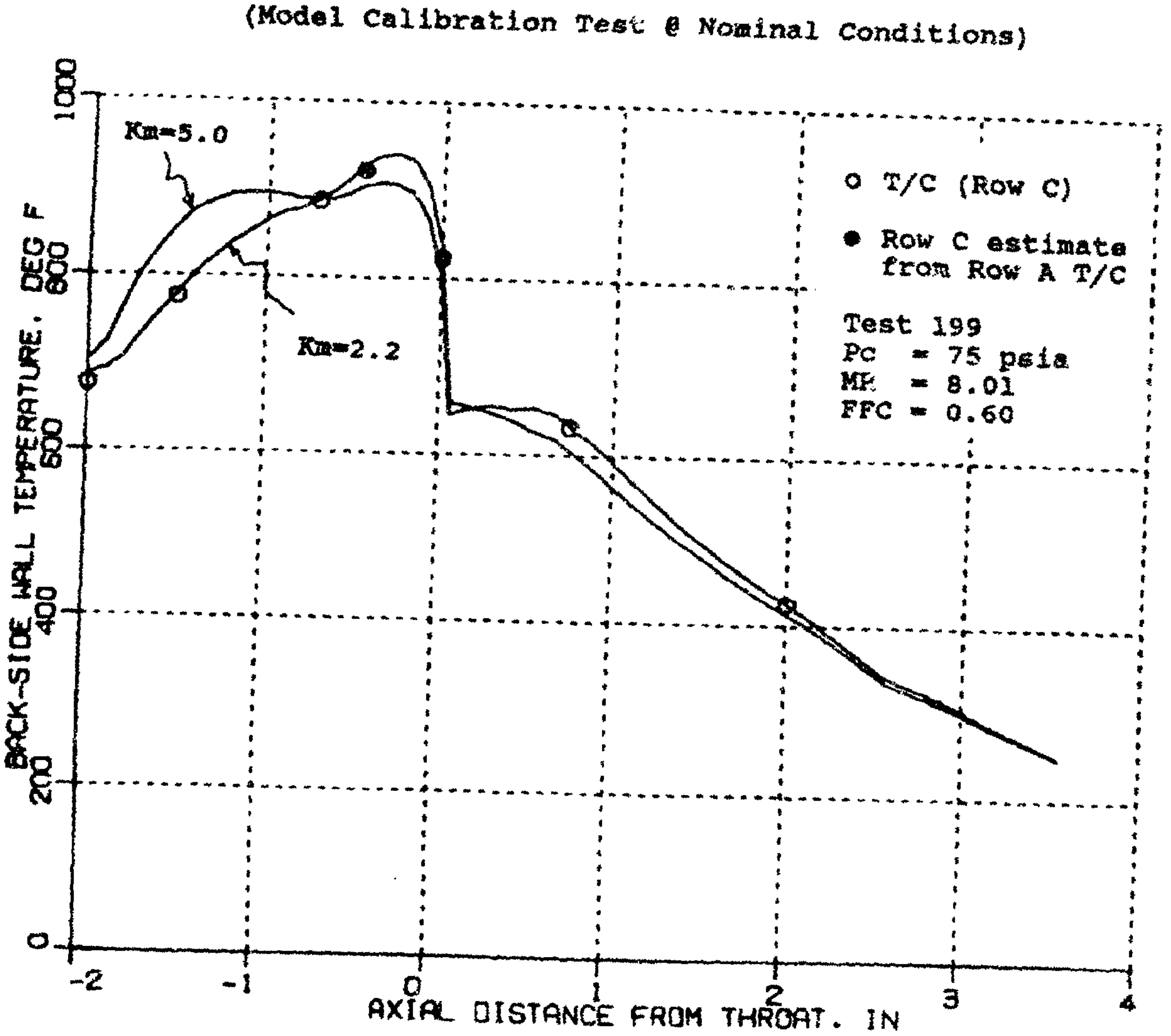

Figure 62. Predicted vs Measured Back-Side Wall Temperatures for the Thruster Design Point

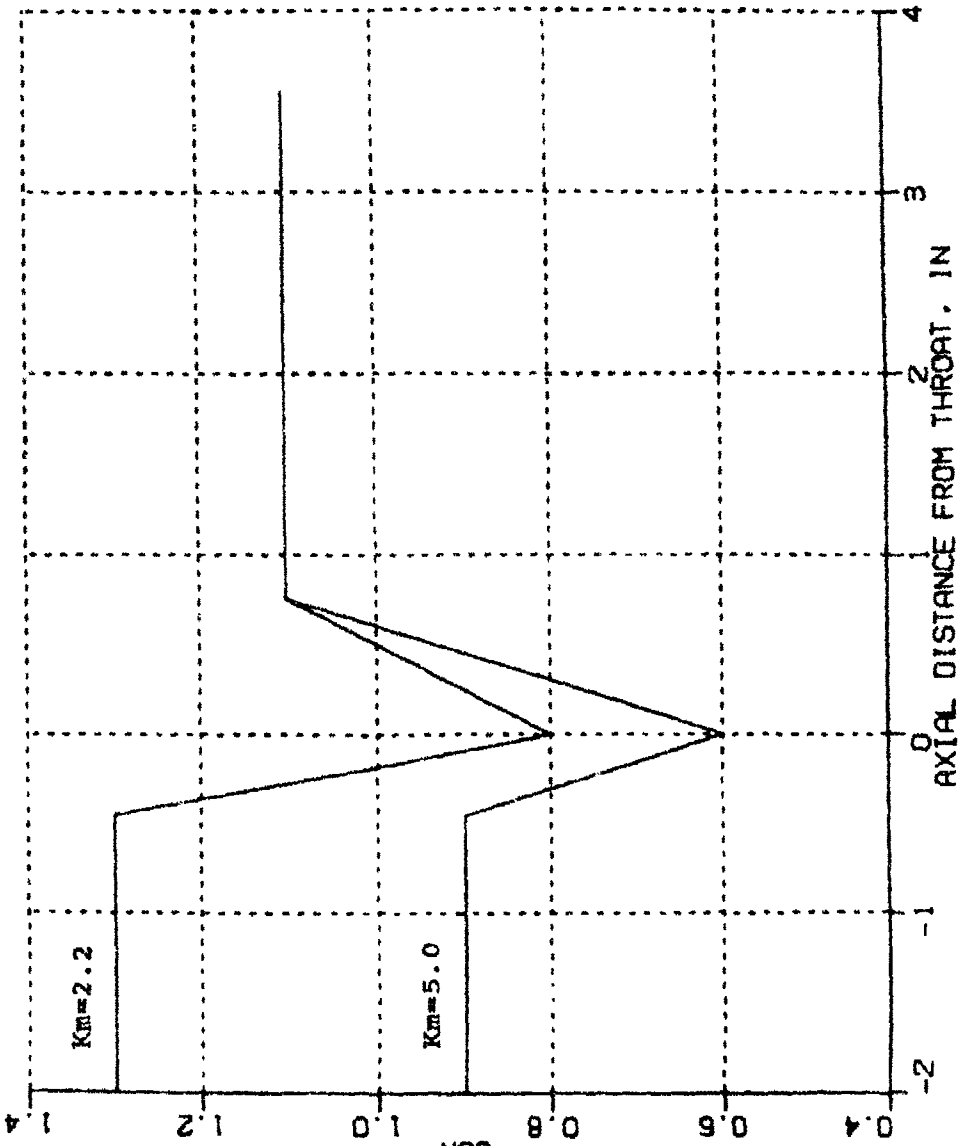

Figure 63. Cgn Profile for Calibrated Model

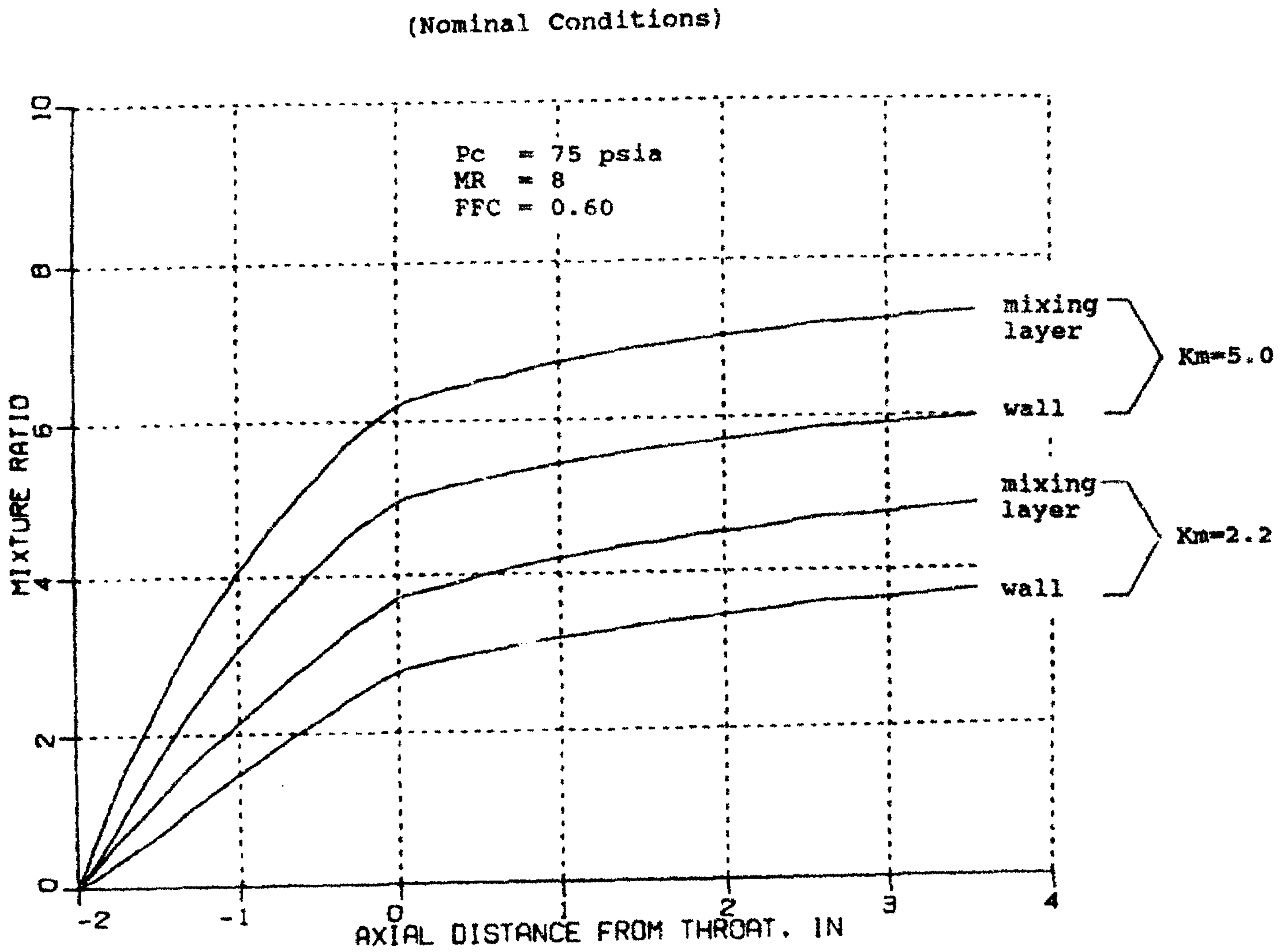

Figure 64. Predicted Stream Tube Mixture Ratios

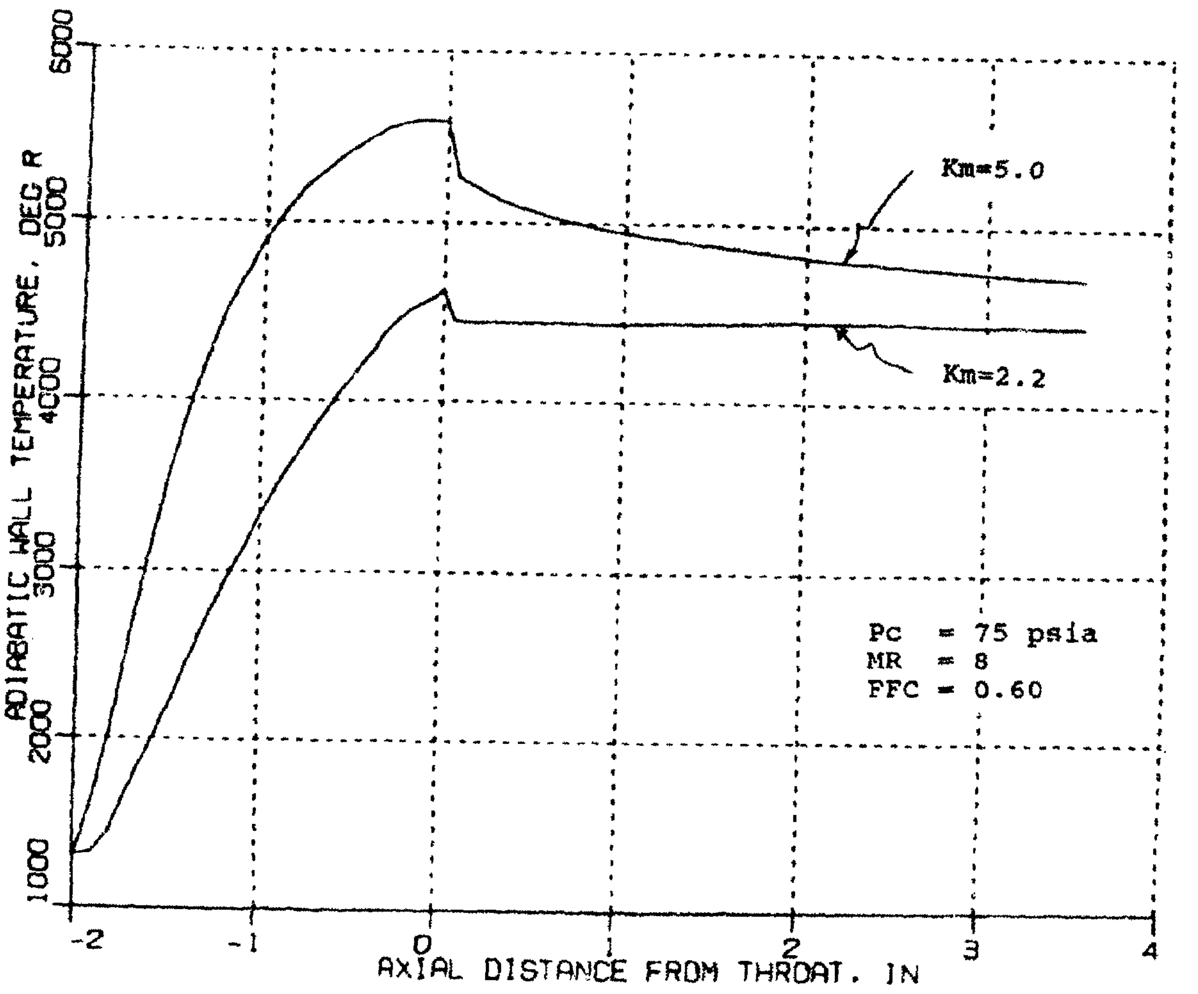

(Nominal Conditions)

Figure 65. Predicted Adiabatic Wall Temperatures

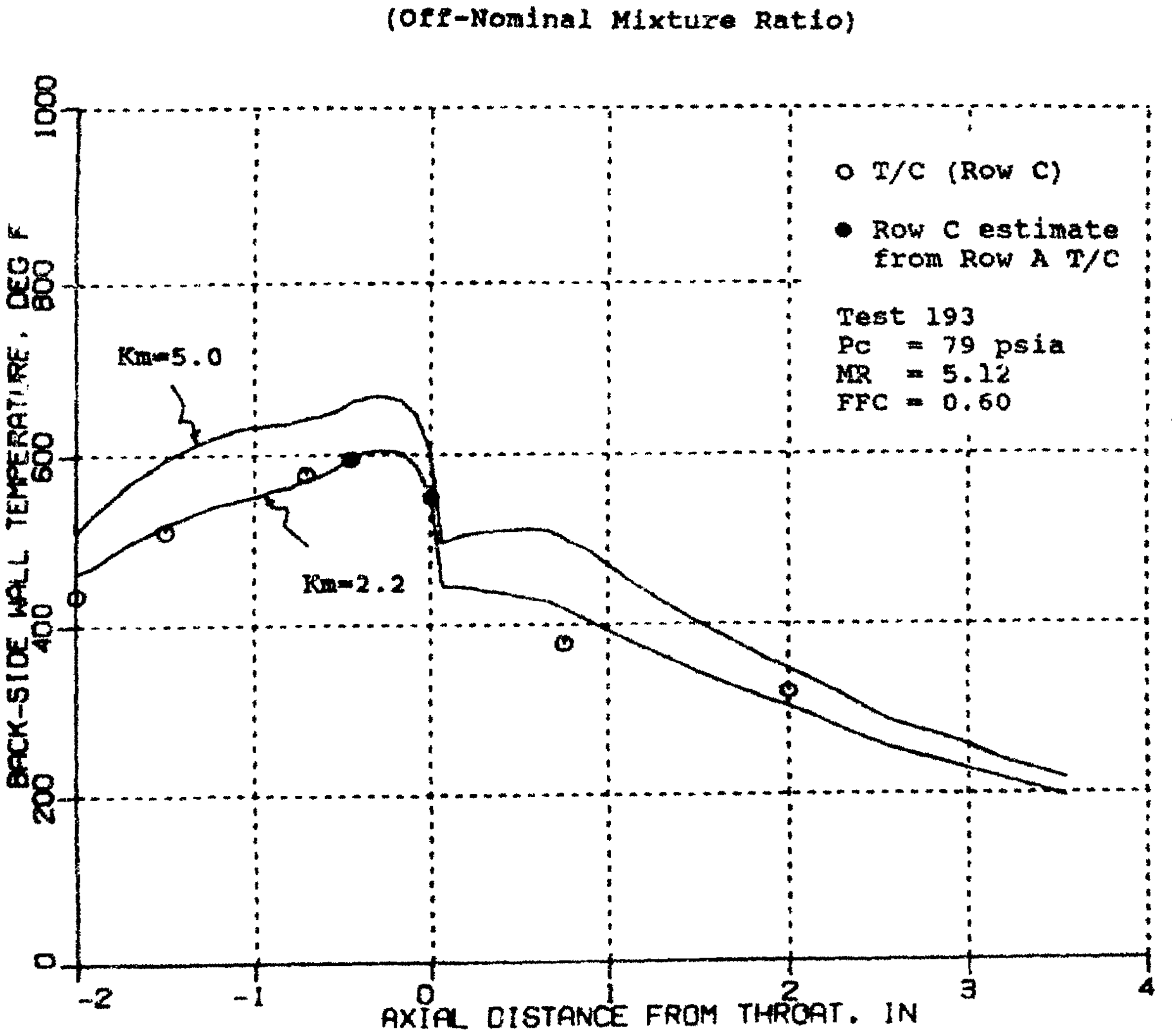

Figure 66. Predicted vs Measured Back-Side Wall Temperatures for Test No. 193

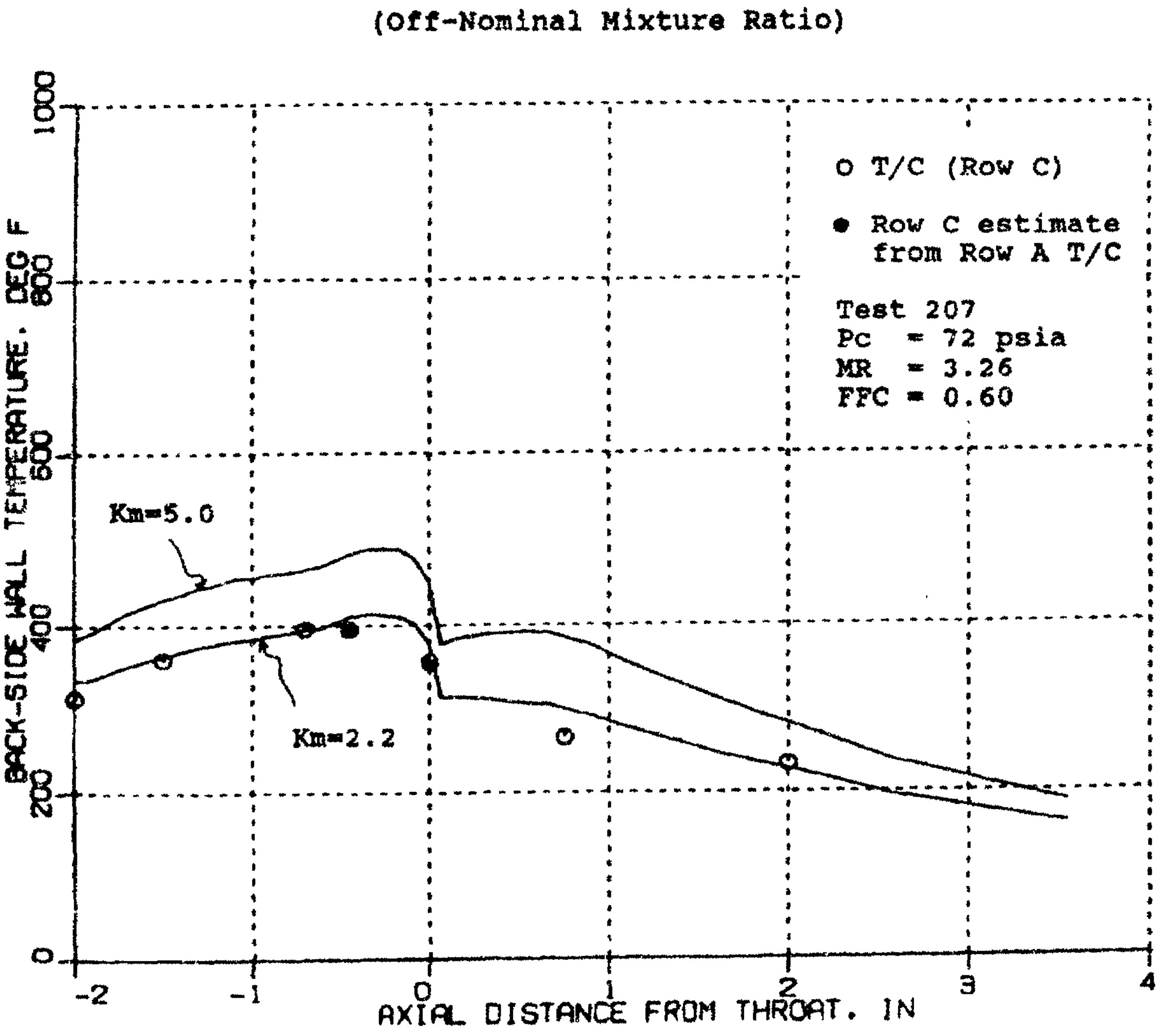

(Off-Nominal Mixture Ratio)

Figure 67. Predicted vs Measured Back-Side Wall Temperatures for Test No. 207

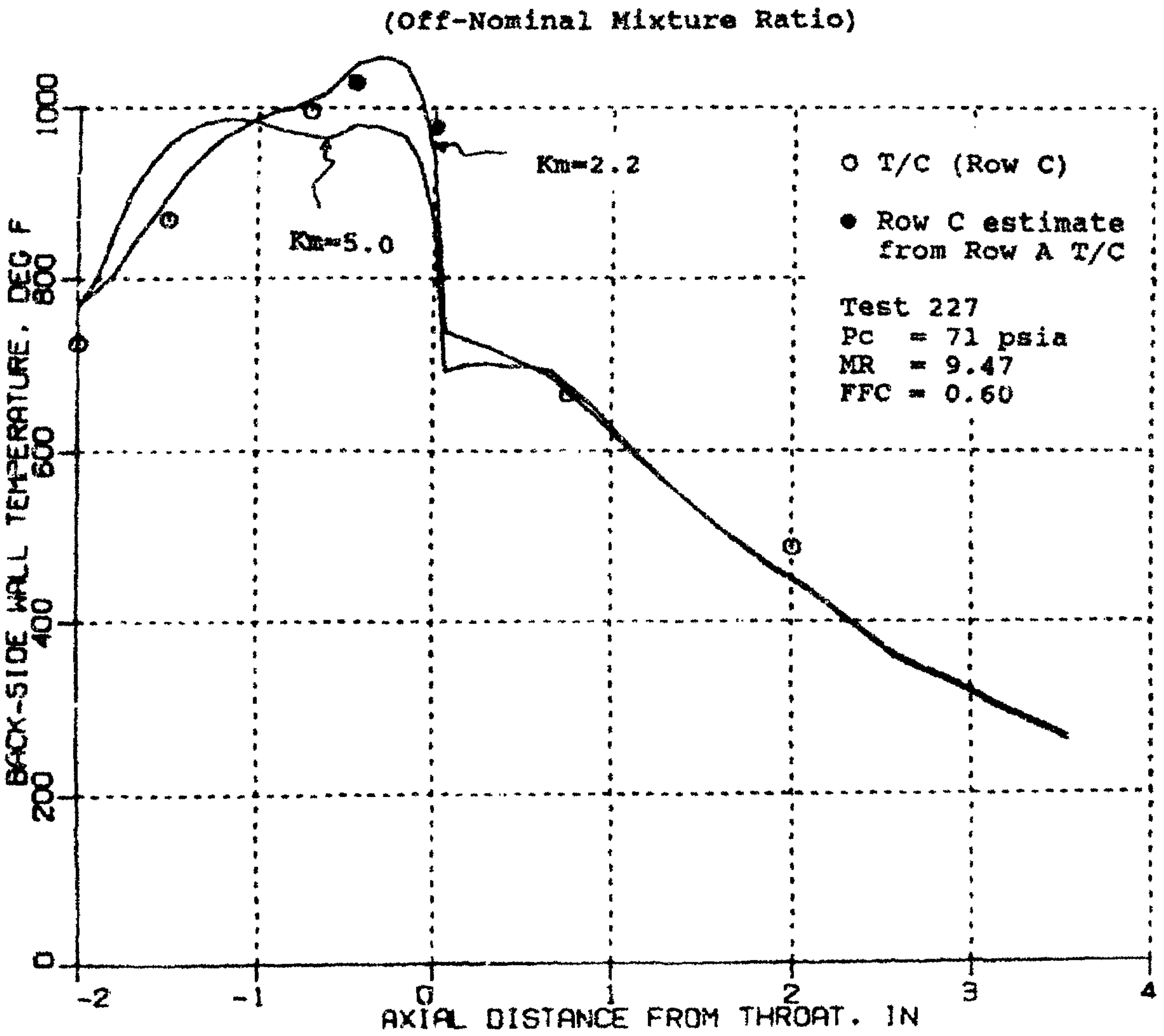

Figure 68. Predicted vs Measured Back-Side Wall Temperatures for Test No. 227

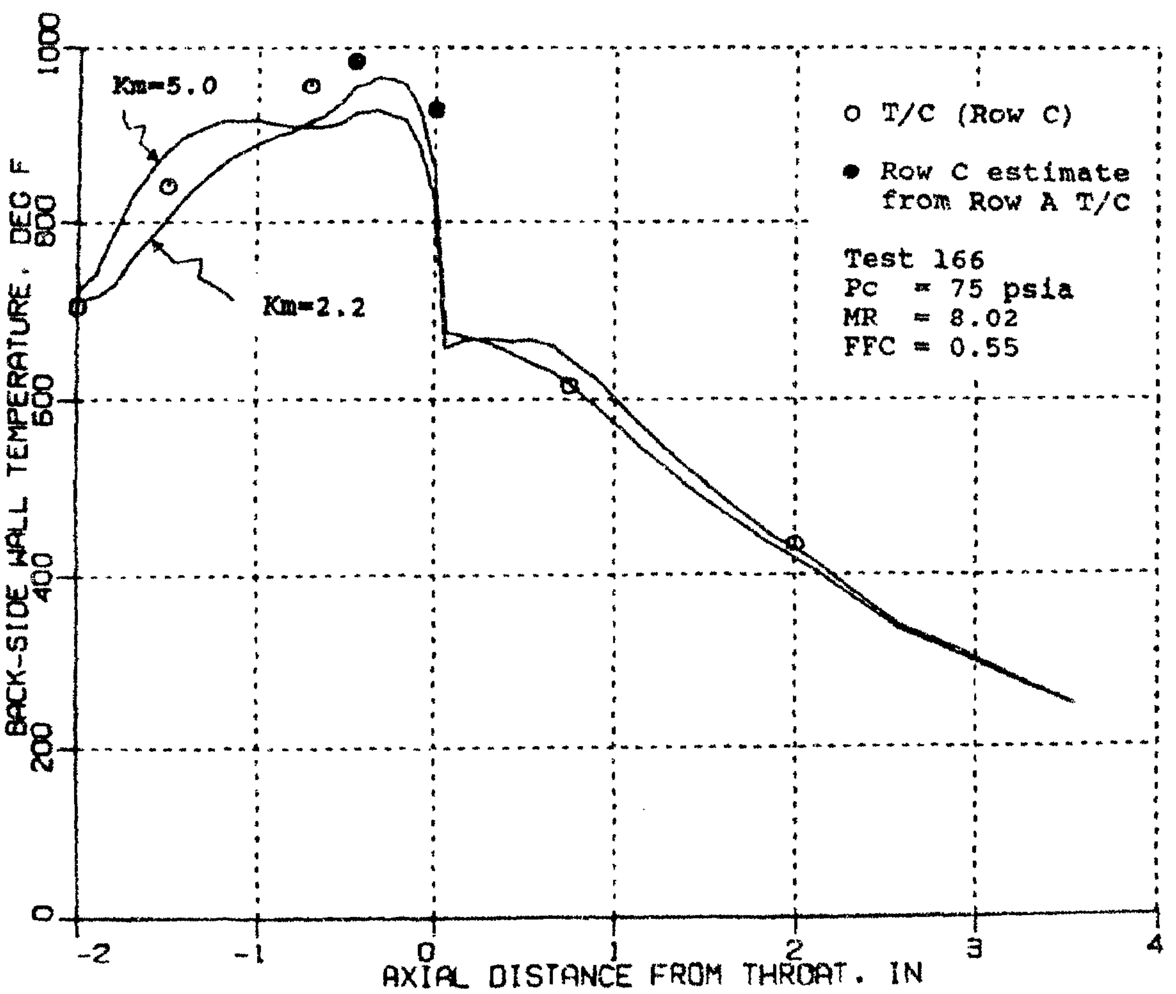

(Off-Nominal Fuel Film Cooling)

Figure 69. Predicted vs Measured Back-Side Wall Temperatures for Test No. 166

barrel, especially at higher mixture ratios. The faster mixing model tends to overpredict at lower than nominal mixture ratio and underpredict at higher than nominal mixture ratio. Both models under predicted the lower fuel film cooling test, although the slower mixing model matched the slope of the temperatures in the barrel. This indicates that a slightly higher Km value in the slower mixing model is necessary to match the 55% fuel film cooling condition.

Figure 70 shows the updated predictions of maximum gas-side and back-side wall temperatures for nominal conditions using the slower mixing (Km of 2.2) model. A maximum gas-side wall temperature of 1010 deg F is predicted just upstream of the throat. A maximum temperature difference between the gas-side and back-side of 89 deg F is also predicted just upstream of the throat. As previously discussed, such a low ΔT through the chamber wall resulted in a LCF life well in excess of 10,000 cycles due to the extremely small thermal strain range. In addition, the thruster surpassed the minimum criteria for creep rupture; therefore, the life limiting case would be high cycle fatigue (HCF).

Even though the performance data fit very well with predicted values, the former predictions were based on the old thermal model with its entrainment multiplier, Km, of 5.0. Therefore, performance predictions were made from the thermal model using the new Km of 2.2. Initially the mixing was assumed to be complete by the throat plane, as the previous predictions used this assumption with good results; however, the new predictions for a perfect injector (ERE = 100 percent) were too low, i.e., lower than the measured performance data. It was then assumed that some mixing did in fact occur downstream of the throat and the thermal mixing model determined mixing up to the nozzle exit plane. This output from the thermal model was used as input to the performance model, with the resulting performance predictions for a perfect injector forming effectively an upper limit on performance. These two sets of predictions were plotted in Figure 71 along with the same measured data that was plotted in Figures 53 and 54. The majority of the data lies just under the upper limit, thus substantiating the assumption that some mixing does in fact occur downstream of the throat plane. Furthermore, the effective injector ERE appears to range from 99.7 percent at an O/F of 3.0 to 98.5 percent at an O/F of 8.0, relative to the upper limit. This value of ERE is more consistent with the earlier ERE assumption of 97 percent, i.e., an improvement over the 96.1 percent ERE of Thruster No. 1.

To gain a better appreciation for the performance increase in going from the Thruster No. 1 design to the Thruster No. 2 design, Figure 72 was prepared. In this figure, the performance of Thruster No. 1 was plotted as a function of mixture ratio. A performance prediction

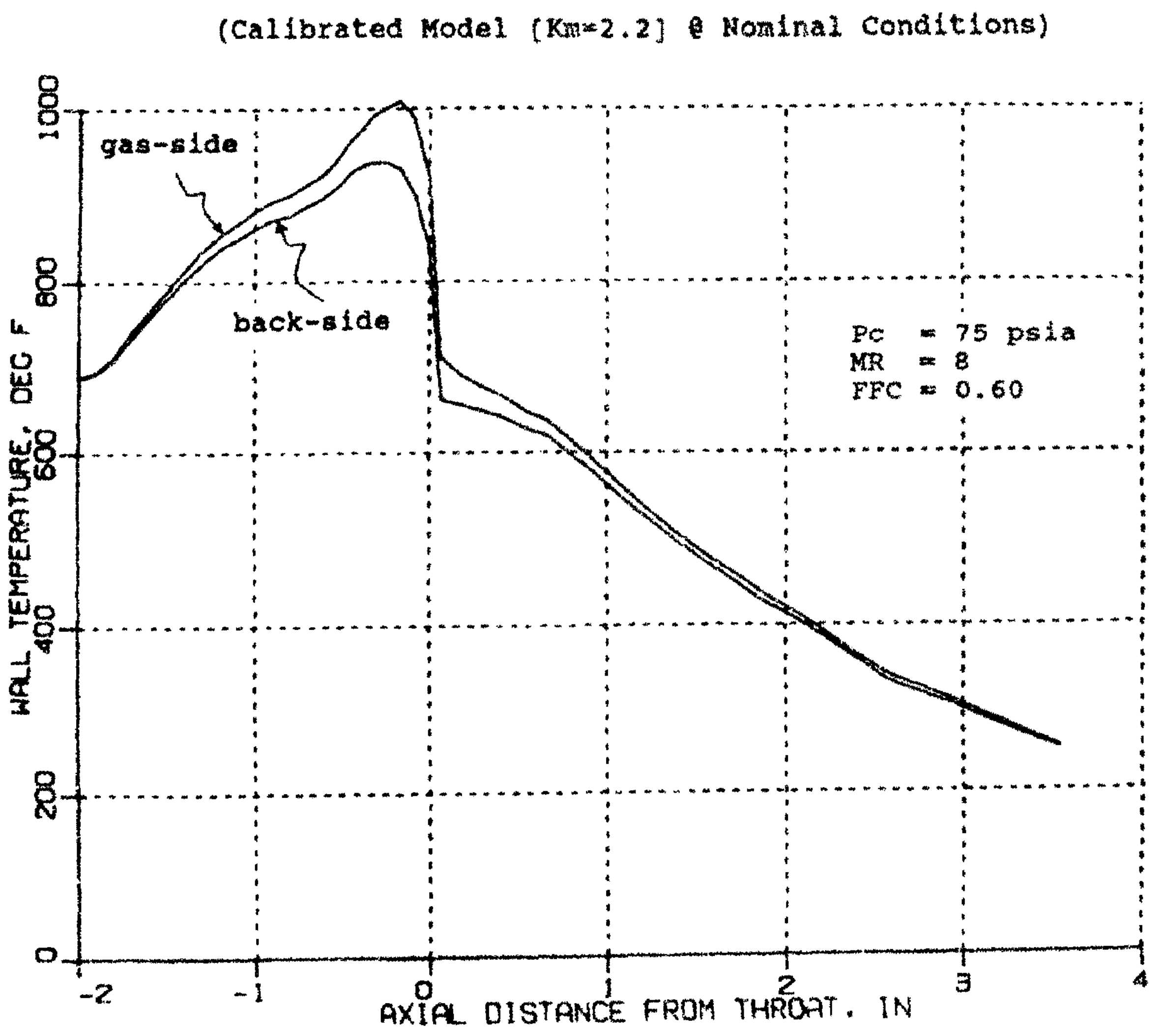
(Calibrated Model [Km=2.2] @ Nominal Conditions)

Figure 70. Predicted Maximum Wall Temperatures for Design Point

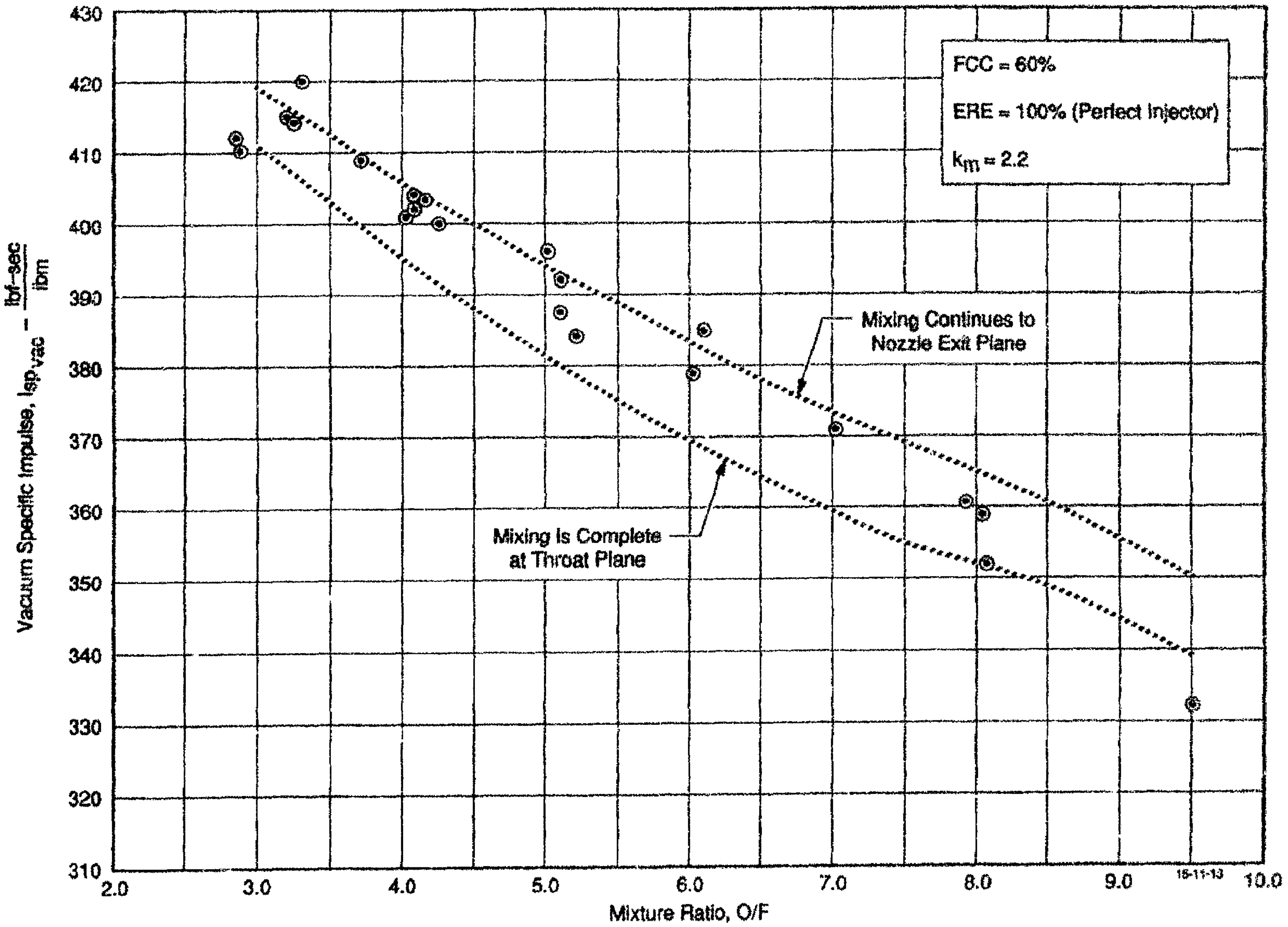

Figure 71. Revised Space Station Thruster Performance Predictions for Calibrated Thermal Model

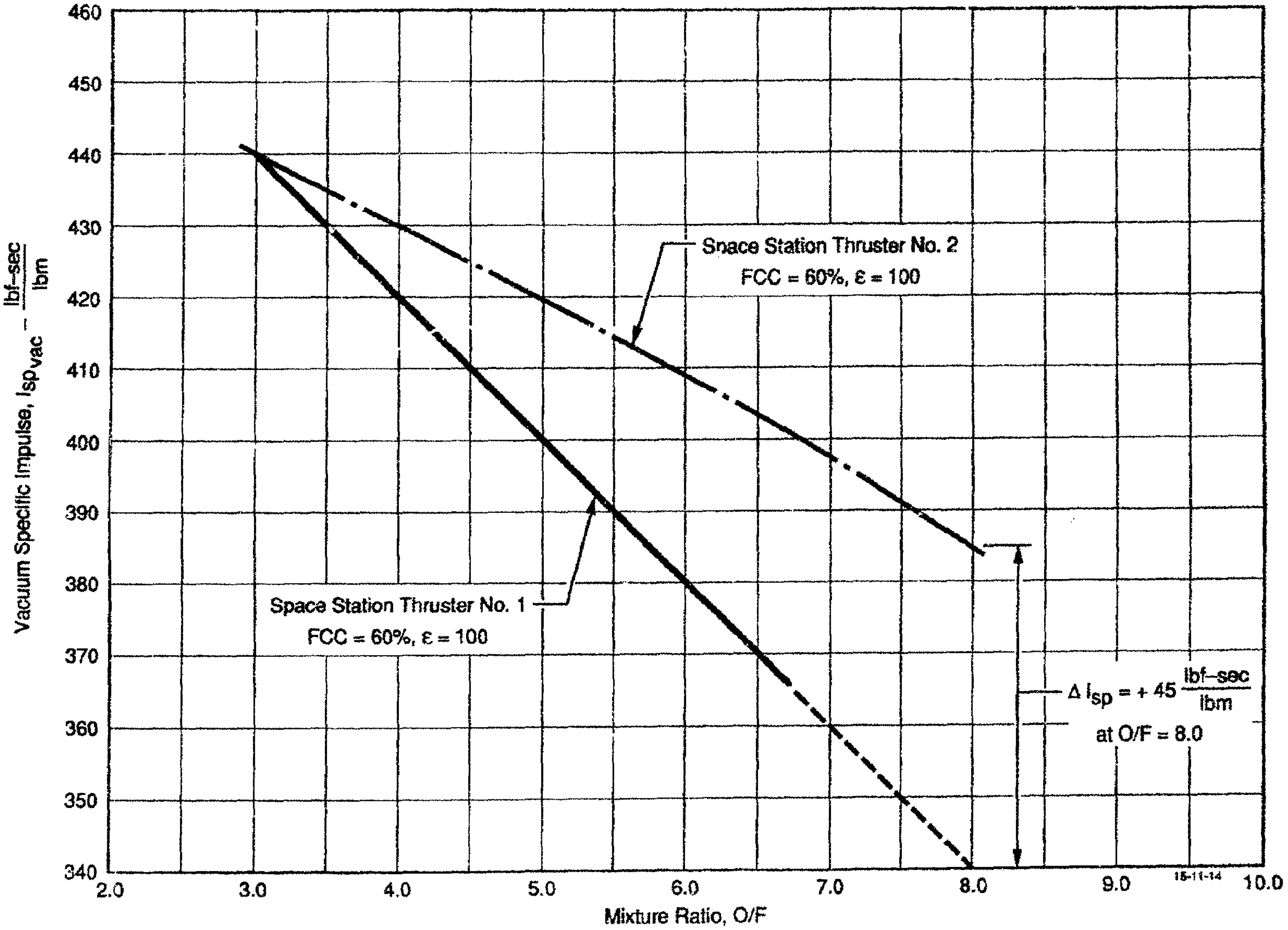

**Figure 72. Performance Improvement for Space Station Thruster No. 2**

was made for Thruster No. 2 using the revised thermal and performance models for an optimized 100:1 nozzle contour. This prediction for Thruster No. 2 was also plotted on Figure 72. The net result was an increase of specific impulse of 45 lbF-sec/lbM at an O/F of 8.0, a 13.2 percent increase. Therefore, the post test performance and hydraulic evaluations performed on Thruster No. 1, and used to guide the design of Thruster No. 2, were entirely correct.

## F. CONCLUSIONS

The objective of the program funded by the NASA LeRC under Contract NAS 3-24398 was to establish a technical data base to support future development of $GO_2/GH_2$ flight thrusters for a Space Station Auxiliary Propulsion System (APS). Specific issues of concern were thruster performance and thrust chamber life. Through the design, fabrication and testing of the two 25 lbF $GO_2/GH_2$ thrusters described in this final report, it is clear that a significant technical data base has been established to guide future development of the flight thrusters for the Space Station APS. Furthermore excellent specific impulse values over a mixture ratio range of 3.0 to 8.0 were achieved, along with very small temperature gradients through the thrust chamber wall. This low $\Delta T$ (89°F) results in an insignificant thermal strain range (0.2 percent), yielding a predicted low cycle fatigue life well in excess of 10,000 cycles. With creep rupture not an issue, the life limiting mechanism is high cycle fatigue, which means that the thrust chamber itself would not be the life limiting component. This conclusion is further supported by the absence of any streaking on the chamber walls which could cause premature failure. The technical development of the $GO_2/GH_2$ thrusters has been successful and flight development can be initiated.

## V. REFERENCES

1. Rosenberg, S.D., Aitken, A.J., Jassowski, D.M., and Royer, K.F., "Ignition Systems for Space Shuttle Auxiliary Propulsion System," NASA CR-72890, 1972. NASA Contract NAS 3-14348.

2. Schoenman, L., "Hydrogen-Oxygen Auxiliary Propulsion for Space Shuttle," NASA CR-120895, Aerojet Liquid Rocket Co., Sacramento, CA, January 1973.

3. Blubaugh, A.L. and Schoenman, L., "Extended Temperature Range ACPS Thruster Investigation," NASA CR-134655, Aerojet Liquid Rocket Co., August 1974. NASA Contract NAS 3-16775.

4. Berkman, D.K. and Schoenman, L., "Oxygen/Hydrogen Thrusters for Space Station Auxiliary Propulsion Systems," Final Report 956457-F-1, Aerojet TechSystems Company, August 1984. JPL Contract 956457.

5. Dowdy, M.W. and Appel, M.A., "High Temperature Gaseous Oxygen/Hydrogen Thrusters for Space Station," Jet Propulsion Laboratory, CIT, Pasadena, CA.

6. Ewen, R.L., et al, "Combustion Effects on Film Cooling," HOCOOL Users Manual, Contract NAS 3-17813, Aerojet Liquid Rocket Co., 15 July 1975.

7. Rousar, D.C. and Ewen, R.L., "Combustion Effects on Film Cooling," NASA CR-135052, Aerojet Liquid Rocket Co., 24 February 1977.

8. Nickerson, G.R., Coats, E.E., and Bartz, J.L., "Two-Dimensional Kinetic Reference Computer Program-TDK," NAS 9-12652, December 1973.

9. Weigold, H.D. and Zupnik, T.F., "Turbulent Boundary Layer Nozzle Analysis Computer Program-TBL," Prepared for the ICRPG Performance Standardization Working Group, AD841202, Aerojet, July 1968.

10. Calhoon, D.F., Ito, J.I., and Kors, D.L., "Investigation of Gaseous Propellant Combustion and Associated Injector/Chamber Design Guidelines," Final Report, NASA CR 121234, Aerojet Liquid Rocket Company, Sacramento, CA, July 1973. NASA Contract 3-14379.

11. Manson, S.S. and Halford, G., "A Method of Estimating High-Temperature Low-Cycle Fatigue Behavior of Materials," Prepared for the International Conference on Thermal and High-Strain Fatigue, Monograph and Report Series No. 32, The Metals and Metallurgy Trust, London, England, 1967.

12. Walker, R.E. and Kors, D.L., "Multiple Jet Study Final Report," NASA CR 121217, Aerojet Liquid Rocket Company, Sacramento, CA, June 1973. NASA Contract NAS 3-15703.

13. Walker, R.E. and Eberhardt, R.G., "Multiple Jet Study Data Correlations," NASA CR 134795, Aerojet Liquid Rocket Company, Sacramento, CA, April 1975. NASA Contract NAS 3-18026.

# APPENDIX A

## DETAILED DRAWINGS
## SPACE STATION THRUSTER NO. 1

| Drawing No. | Title |
|---|---|
| 1198364 | Bracket Valve |
| 1198369 | Spark Igniter |
| 1198380 | Engine Assembly, Space Station |
| 1198381 | Platelet, Flow Balancing |
| 1198382 | Chamber Assembly |
| 1198383 | Body, Igniter |
| 1198384 | Chamber Sleeve Assembly |
| 1198385 | Igniter Body and Platelet Assembly |
| 1198558 | Body, Igniter |
| 1198559 | Igniter Body and Platelet Assembly |
| 1198674 | Fitting |
| 1198675 | Plate, Thrust |
| 1198692 | Spark Igniter |
| 1198832 | Gasket, Spark Igniter |

NOTES:

1 INTERPRET DRAWING PER ATC-STD-4976.

2 STAM PER ATC-46251.

3 MARK PER AS478-7A WITH 1198364 AND APPLICABLE DASH NUMBER.

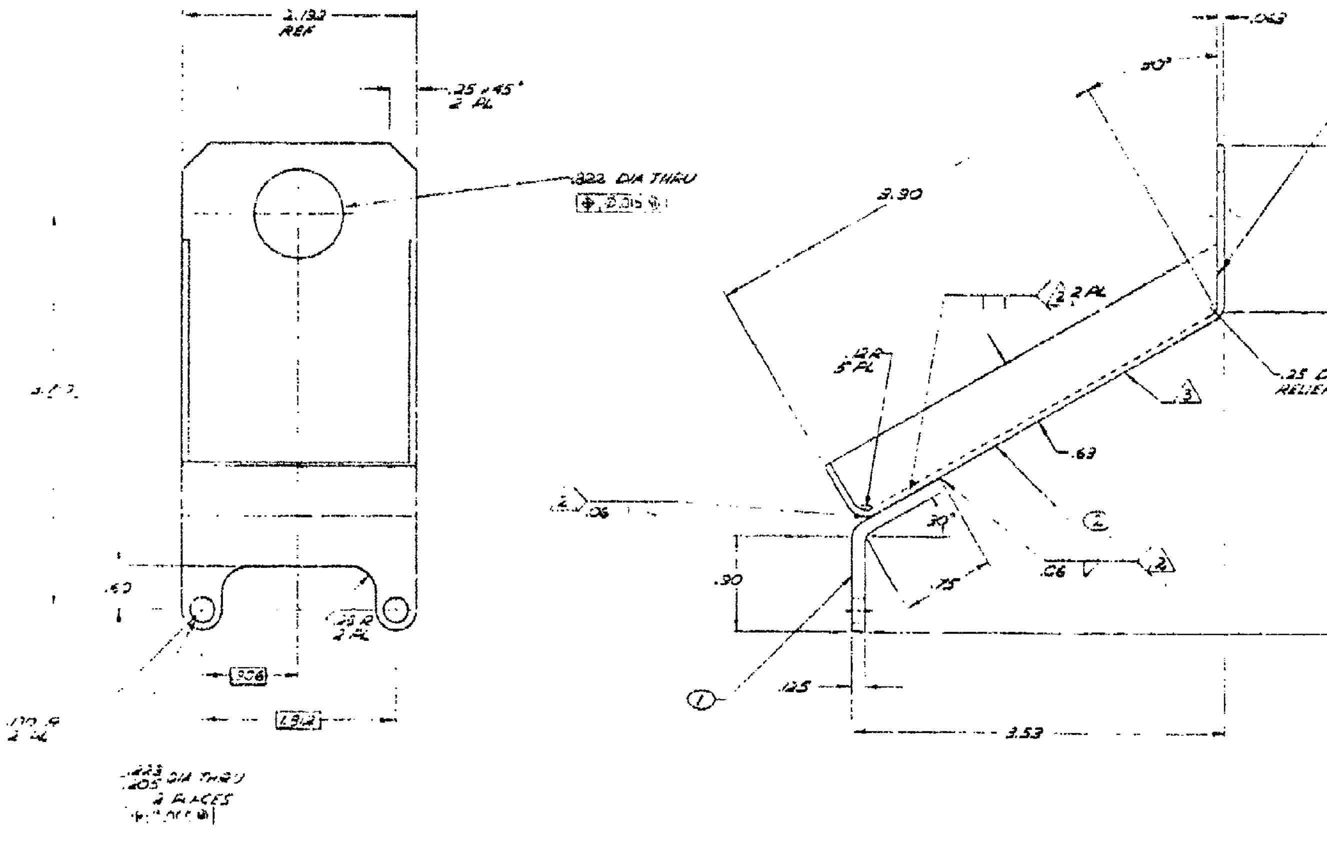

DEVELOPMENT HA

FOR TEST OR EXPERIME

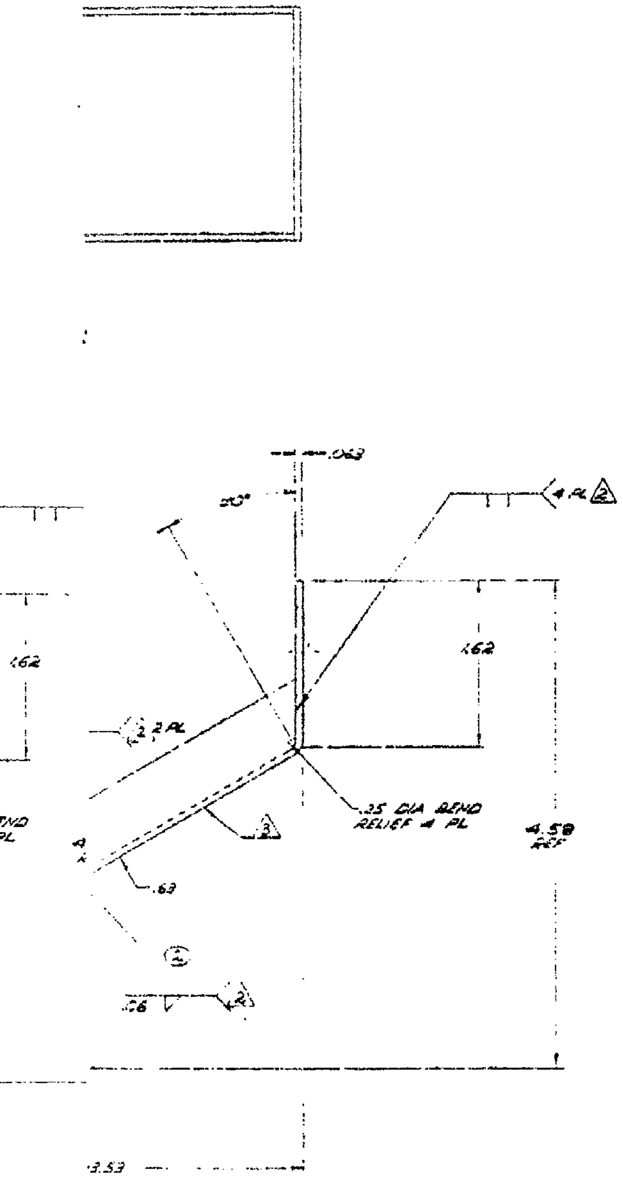

FOR RECORD ONLY. DO NOT FABRICATE TO THIS PRINT.

X RETAIN ORIGINAL VELLUM UNTIL July 1992

__ DESTROY ORIGINAL VELLUM AFTER MICROFILMING

AUTHORIZED CHECKER RR Wilson 89-9-26

| | | | | | | |
|---|---|---|---|---|---|---|
| AR | | | WELD WIRE | AWS A5.9 CL ER-349 | | 3 |
| 1 | | -2 | | CRES | 30-2-1365<br>CL 347 | 2 |
| 1 | | -1 | | CRES | 30-2-1365<br>CL 347 | 1 |
| -9 | FSCM NO. | PART OR IDENTIFYING NO. | NOMENCLATURE OR DESCRIPTION | MATERIAL SPECIFICATION | | ITEM NO. |

PARTS LIST

CONTRACT NO. NAS 7-24338

DRAWN Y. MISTYOLL 25-7-0

DESIGN 79-6-77

RESPONSIBILITY 79-6-77

DO NOT SCALE DRAWING

DWG LEVEL 2

TechSystems

BRACKET , VALVE

SIZE E FSCM NO. 05824 DWG NO. 1198364

SCALE 2/1 RELEASE DATE 89-9-26 Q SHEET 1 OF 1

**DEVELOPMENT HARDWARE**

FOR TEST OR EXPERIMENTATION

1198364

NOTES:

1 INTERPRET DRAWING PER ATC-STD-4976.

2 MARK PER AS478-7A WITH 1198369 AND APPLICABLE DASH NO. OBLITERATE ORIGINAL IDENTIFICATION WITHOUT DAMAGE TO THE PART.

3 ALTER AS SHOWN.

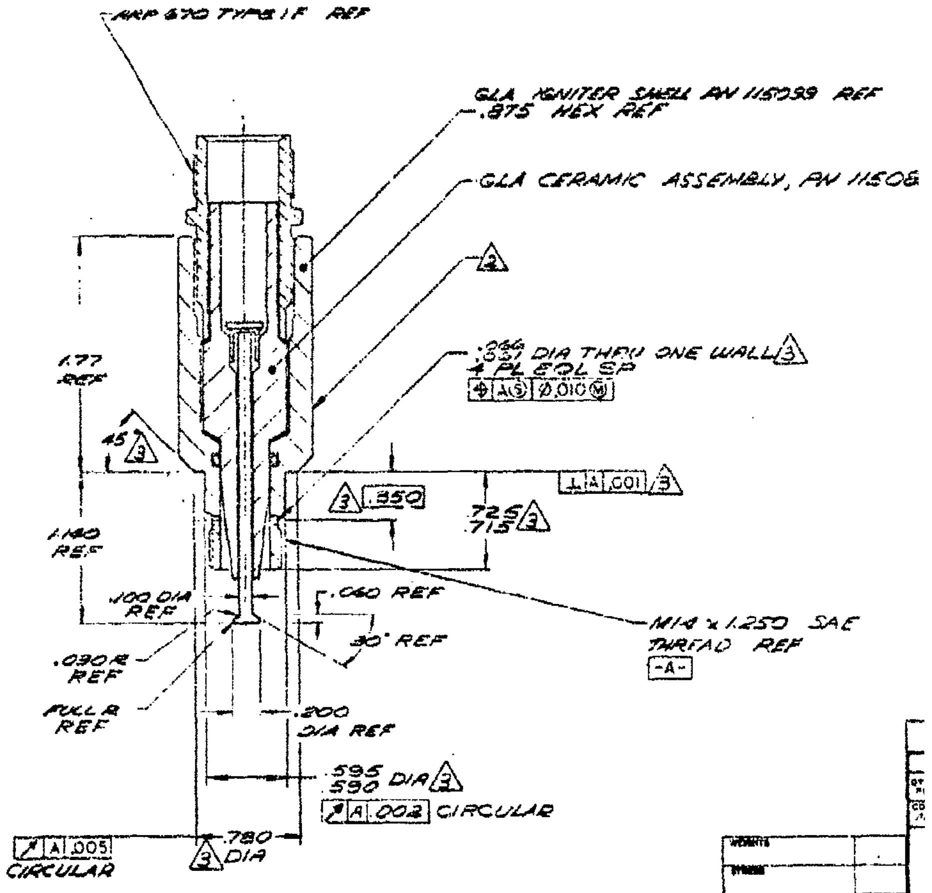

| | |
|---|---|
| WEIGHTS | |
| STRESS | |
| MATERIALS & PROCESSES | |
| MANUFACTURING ENGRG | |
| QUALITY ASSURANCE | |
| ADDITIONAL APPROVALS | DATE |

DEVELOPMENT HARDWARE
FOR TEST OR EXPERIMENTATION

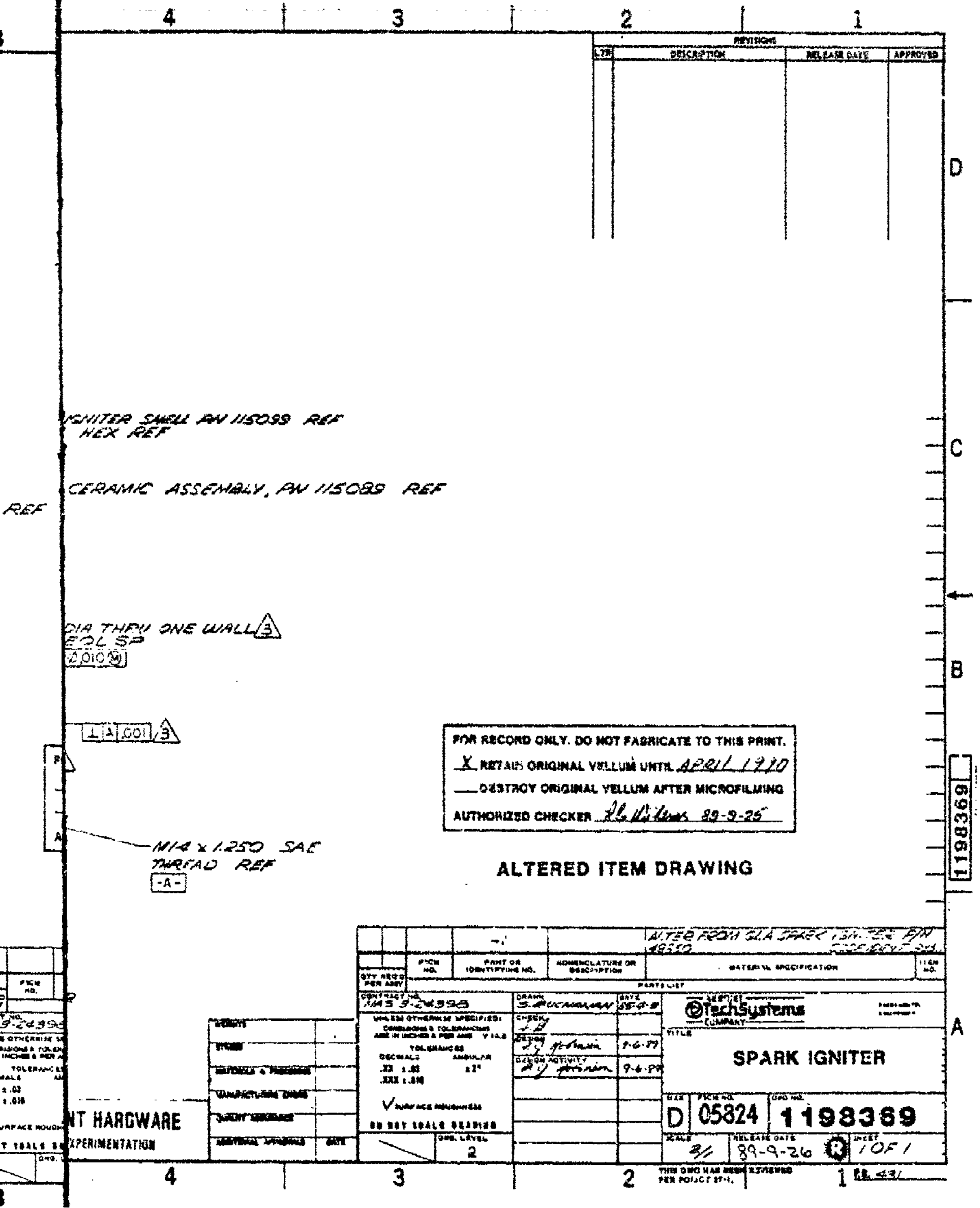

FOR RECORD ONLY. DO NOT FABRICATE TO THIS PRINT.

X RETAIN ORIGINAL VELLUM UNTIL *APRIL 1990*

___ DESTROY ORIGINAL VELLUM AFTER MICROFILMING

AUTHORIZED CHECKER *89-9-25*

**ALTERED ITEM DRAWING**

ALTERED FROM GLA SPARK IGNITER P/N 48550

QTY REQD PER ASSY | FSCM NO. | PART OR IDENTIFYING NO. | NOMENCLATURE OR DESCRIPTION | MATERIAL SPECIFICATION | ITEM NO.

PARTS LIST

CONTRACT NO. NAS 9-24398

UNLESS OTHERWISE SPECIFIED: DIMENSIONS & TOLERANCES ARE IN INCHES & PER ANSI Y 14.5

TOLERANCES
DECIMALS .XX ±.03 .XXX ±.010
ANGULAR ±1°

SURFACE ROUGHNESS

DO NOT SCALE DRAWING

DWG. LEVEL 2

DRAWN S. BUCHANAN DATE 88-9-8

CHECK

DESIGN 9-6-79

DESIGN ACTIVITY 9-6-79

TechSystems COMPANY

TITLE

**SPARK IGNITER**

SIZE D | FSCM NO. 05824 | DWG NO. 1198369

SCALE 2/1 | RELEASE DATE 89-9-26 | R | SHEET 1 OF 1

THIS DWG HAS BEEN REVIEWED PER POLICY 37-1.

NOTES

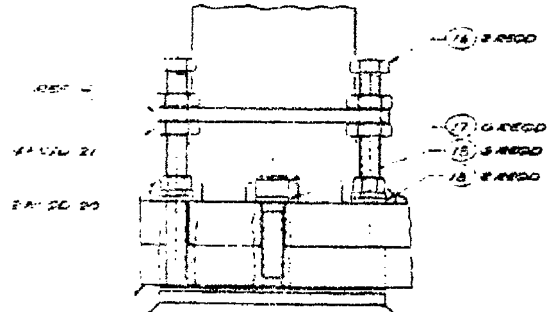

VIEW B-B

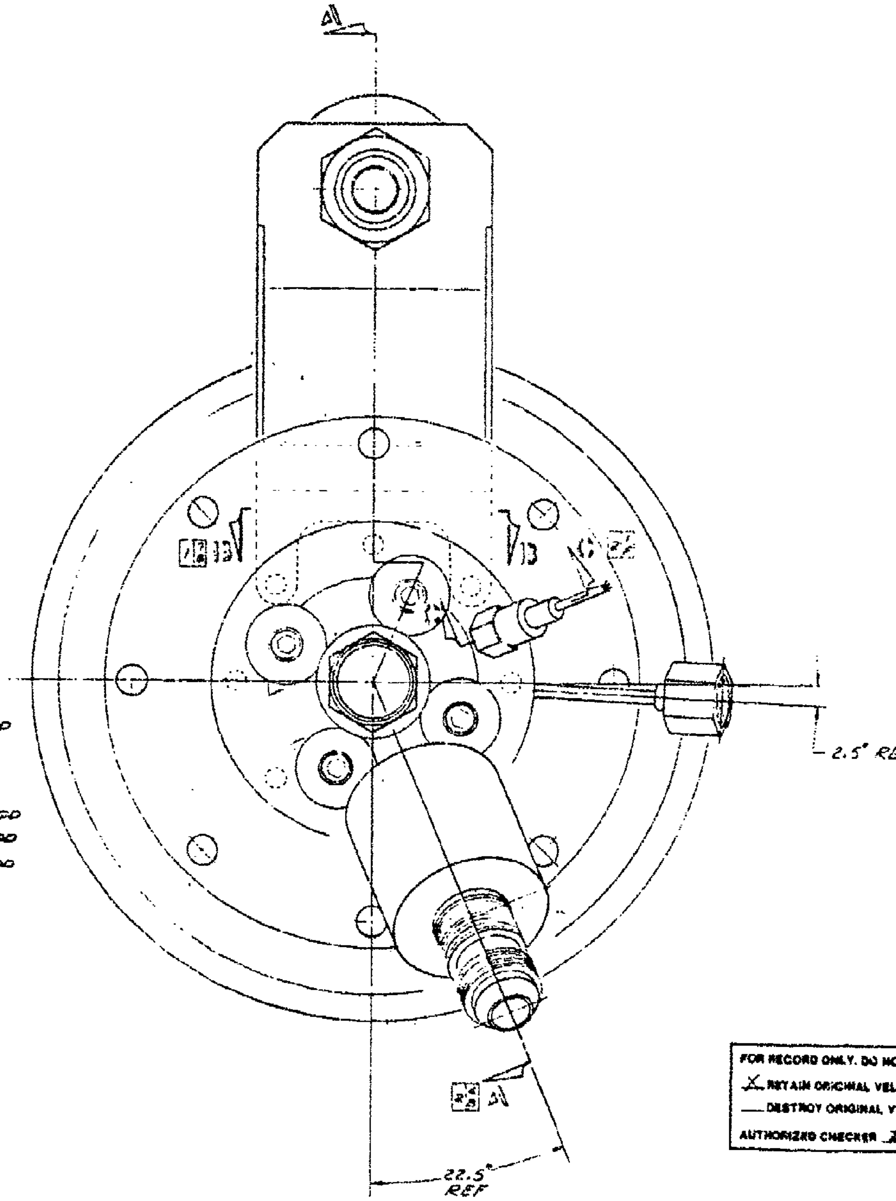

FOR RECORD ONLY. DO NO
X RETAIN ORIGINAL VEL
___ DESTROY ORIGINAL V
AUTHORIZED CHECKER

DEVELOPMENT HAR
FOR TEST OR EXPERIMENTA

| LTR | DESCRIPTION | RELEASE DATE | APPROVED |
|---|---|---|---|
|  |  |  |  |

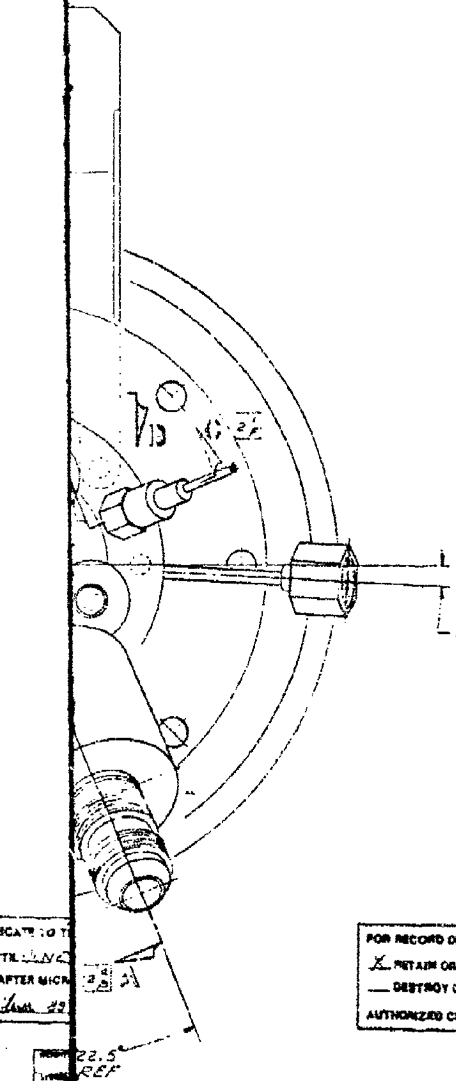

| -9 | -9 | FSCM NO. | PART OR IDENTIFYING NO. | NOMENCLATURE OR DESCRIPTION | MATERIAL SPECIFICATION | ZONE | ITEM NO. |
|---|---|---|---|---|---|---|---|
| 2 | 2 |  |  | O-RING |  | [illegible] | 25 |
| 1 | 1 | 05959 | AR164174 | SEAL ASSY |  | [illegible] | 24 |
|  |  |  |  |  |  |  | 23 |
| 1 | 1 |  | AN924-4J | NUT |  | [illegible] | 22 |
| 4 | 4 |  | MS9550-30P | NUT |  | [illegible] | 21 |
| 6 | 6 |  | MS21042-3 | NUT |  | [illegible] | 20 |
| 3 | 3 |  | NAS620C10L | WASHER |  | [illegible] | 19 |
| 6 | 6 |  | NAS1189K3-11 | SCREW |  | [illegible] | 17 |
|  |  |  |  |  |  |  |  |
| 6 | 6 |  | NAS1189K3-5 | SCREW |  | [illegible] | 16 |
|  |  |  |  |  |  |  | 15 |
|  |  |  |  |  |  |  | 14 |
| 1 | 1 |  |  | TRANSDUCER, PRESSURE |  | [illegible] | 13 |
| 2 | 2 |  |  | SOLENOID VALVE |  | [illegible] | 12 |
|  |  |  | [illegible]-1 | ASSY SPARK IGNITER |  | [illegible] | 11 |
| 1 |  |  | 1198632-1 | SPARK IGNITER |  | [illegible] | [illegible] |
|  | 1 |  | 1198369-1 | SPARK IGNITER |  | [illegible] | [illegible] |
| 1 |  |  | 1198659-9 | BODY PLATELET ASSY |  | [illegible] | 9 |
|  | 1 |  | 1198386-3 | BODY PLATELET ASSY |  | [illegible] | 7 |
| 1 | 1 |  | 1198678-1 | PLATE, THRUST |  | [illegible] | 6 |
| 1 | 1 |  | 1198674-1 | FITTING |  | [illegible] | 5 |
| 1 | 1 |  | 1198564-9 | BRACKET, VALVE |  | [illegible] | 4 |
| 1 | 1 |  | 1198381-1 | PLATELET FLOW BAL |  | [illegible] | 3 |
| 1 | 1 |  | 1198334-1 | CHAMBER-SLEEVE ASSY |  | [illegible] | 2 |
| 1 | 1 |  | 1198362-7 | CHAMBER ASSEMBLY |  | [illegible] | 1 |

QTY REQD PER ASSY

PARTS LIST

FOR RECORD ONLY. DO NOT FABRICATE TO THIS PRINT.
X RETAIN ORIGINAL VELLUM UNTIL JUNE 1920
___ DESTROY ORIGINAL VELLUM AFTER MICROFILMING
AUTHORIZED CHECKER [illegible] 89-9-15

**DEVELOPMENT HARDWARE**
FOR TEST OR EXPERIMENTATION

CONTRACT NO. NAS 3-27432
DRAWN [illegible] DATE [illegible]
CHECK
UNLESS OTHERWISE SPECIFIED DIMENSIONS & TOLERANCES ARE IN INCHES
TOLERANCES
DECIMALS ANGULAR
.XX ±.03 ±1°
.XXX ±.010
√ SURFACE ROUGHNESS
DO NOT SCALE DRAWING
DWG. LEVEL 2
DESIGN [illegible] 74-17
DESIGN ACTIVITY [illegible] 7-6-99

GenCorp Aerojet TechSystems

TITLE
**ENGINE ASSEMBLY, SPACE STATION**

| SIZE | CAGE NO. | DWG NO. |
|---|---|---|
| E | 05824 | 1198380 |

SCALE 2/1 RELEASE DATE [illegible] SHEET 1 OF 2

1198380

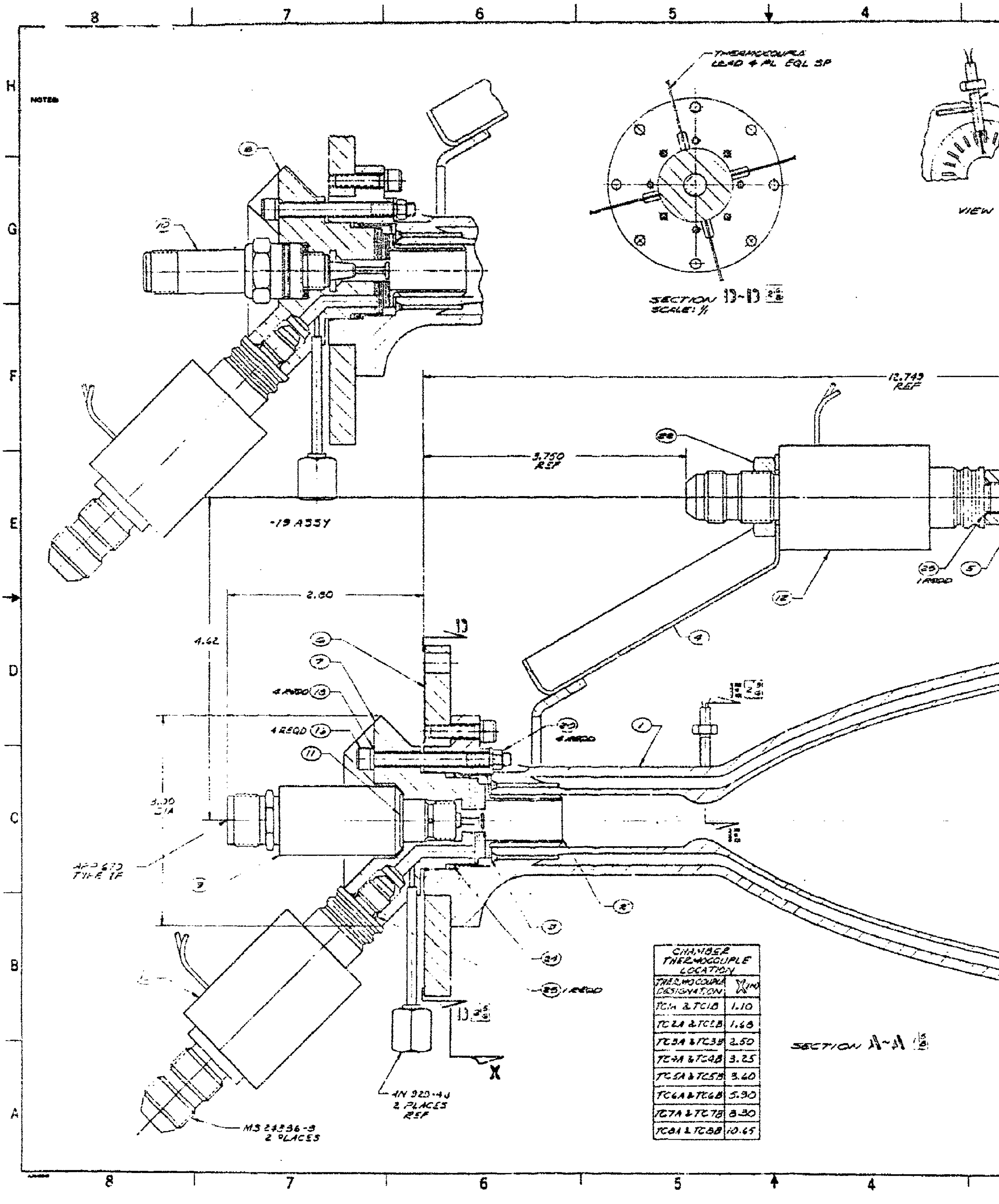

CHAMBER THERMOCOUPLE LOCATION

| THERMOCOUPLE DESIGNATION | X IN |
|---|---|
| TC1A & TC1B | 1.10 |
| TC2A & TC2B | 1.68 |
| TC3A & TC3B | 2.50 |
| TC4A & TC4B | 3.25 |
| TC5A & TC5B | 3.60 |
| TC6A & TC6B | 5.90 |
| TC7A & TC7B | 8.30 |
| TC8A & TC8B | 10.65 |

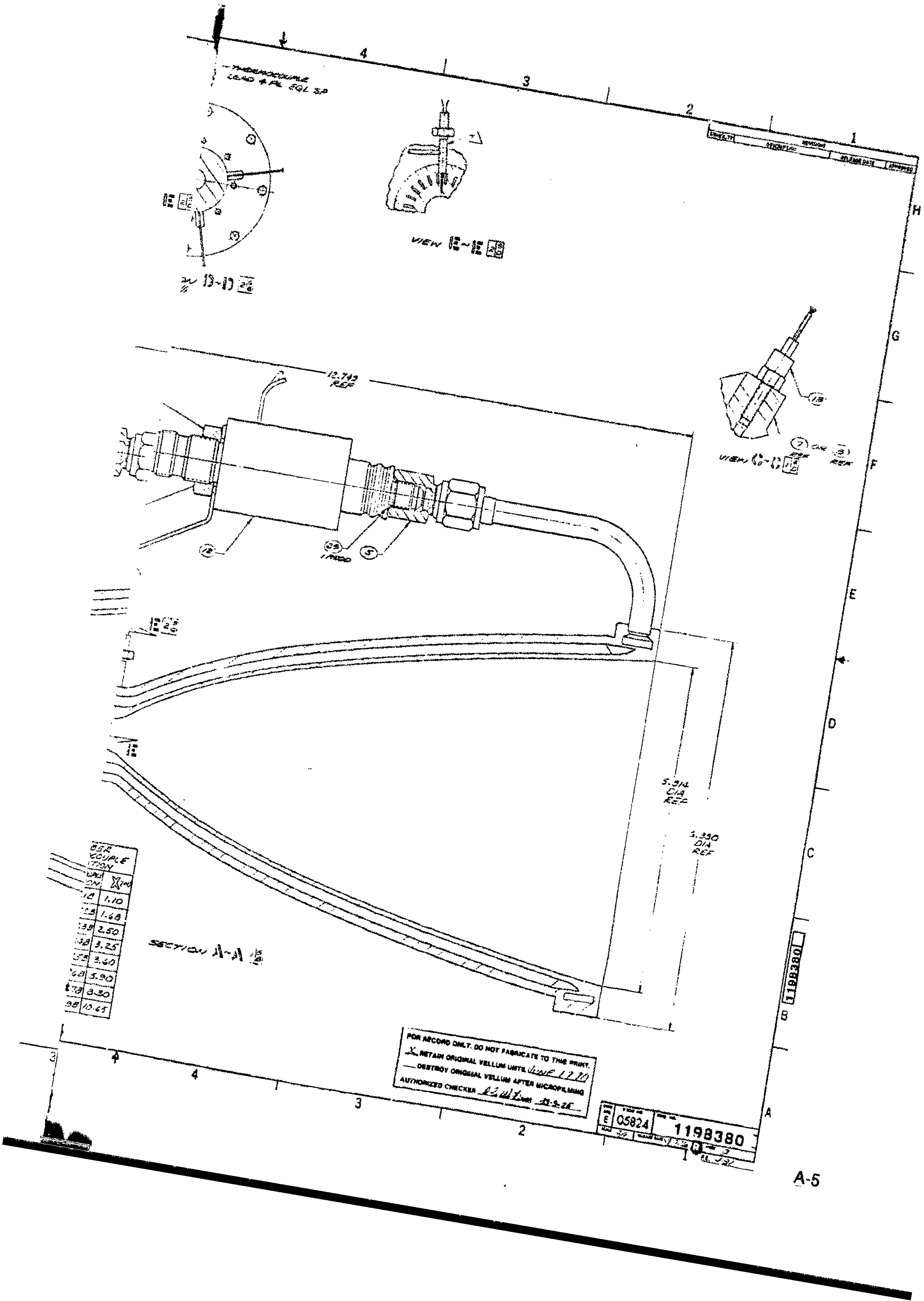

| BER COUPLE TION |  |
|---|---|
| LAS ON | X (IN) |
| .18 | 1.10 |
| .25 | 1.68 |
| .38 | 2.50 |
| .48 | 3.25 |
| .55 | 3.60 |
| .68 | 5.90 |
| .78 | 8.30 |
| .98 | 10.65 |

FOR RECORD ONLY. DO NOT FABRICATE TO THIS PRINT.
X RETAIN ORIGINAL VELLUM UNTIL June 17 70
— DESTROY ORIGINAL VELLUM AFTER MICROFILMING
AUTHORIZED CHECKER 12-9-68

E 05824 1198380

1198380

**NOTES:**

1 INTERPRET DRAWING PER ATC-STD-4926.

2 FOR MATERIAL THICKNESS AND NEGATIVE NUMBER, SEE TABLE.

3 PLATELET MATERIAL SURFACE CONDITION SHALL BE FREE OF CUTS, DENTS AND SCRATCHES.

4 PHOTOCHEMICALLY ETCH PLATELETS PER ATC-47137.

5 DIMENSION INDICATED IS TO BE USED AS THE CONTROLLING FEATURE DURING ETCHING PROCESS.

6 INSPECT AND RECORD ALL CRITICAL DIMENSIONS INDICATED.

7 MARK PER AS478-37 WITH 1198381 AND APPLICABLE DASH NUMBER.

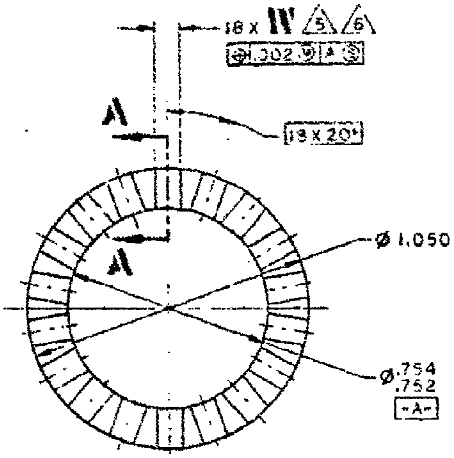

| DASH NO | T THICK (2) | W WIDE | D DEEP | NEGATIVE NUMBERS (2) |
|---|---|---|---|---|
| -1 | .010 | .025 | .005-.006 | 3713 |
| -2 | .010 | .036 | .005-.006 | 3714 |
| -3 | .010 | .058 | .005-.006 | 3715 |
| -4 | .010 | .079 | .005-.006 | 3716 |
| -5 | .015 | — | — | 3717 |
| -6 | .020 | — | — | 3718 |
| -7 | .020 | .100 | .010 - .011 | 3719 |
| -8 | .015 | .100 | .005-.006 | 3720 |
|  |  |  |  |  |
|  |  |  |  |  |

FOR RECORD ONLY. DO NOT FABRICATE TO THIS PRINT.
X RETAIN ORIGINAL VELLUM UNTIL JAN 1993
___ DESTROY ORIGINAL VELLUM AFTER MICROFILMING
AUTHORIZED CHECKER 89-9-25

**DEVELOPMENT HARDWARE**
FOR TEST OR EXPERIMENTATION

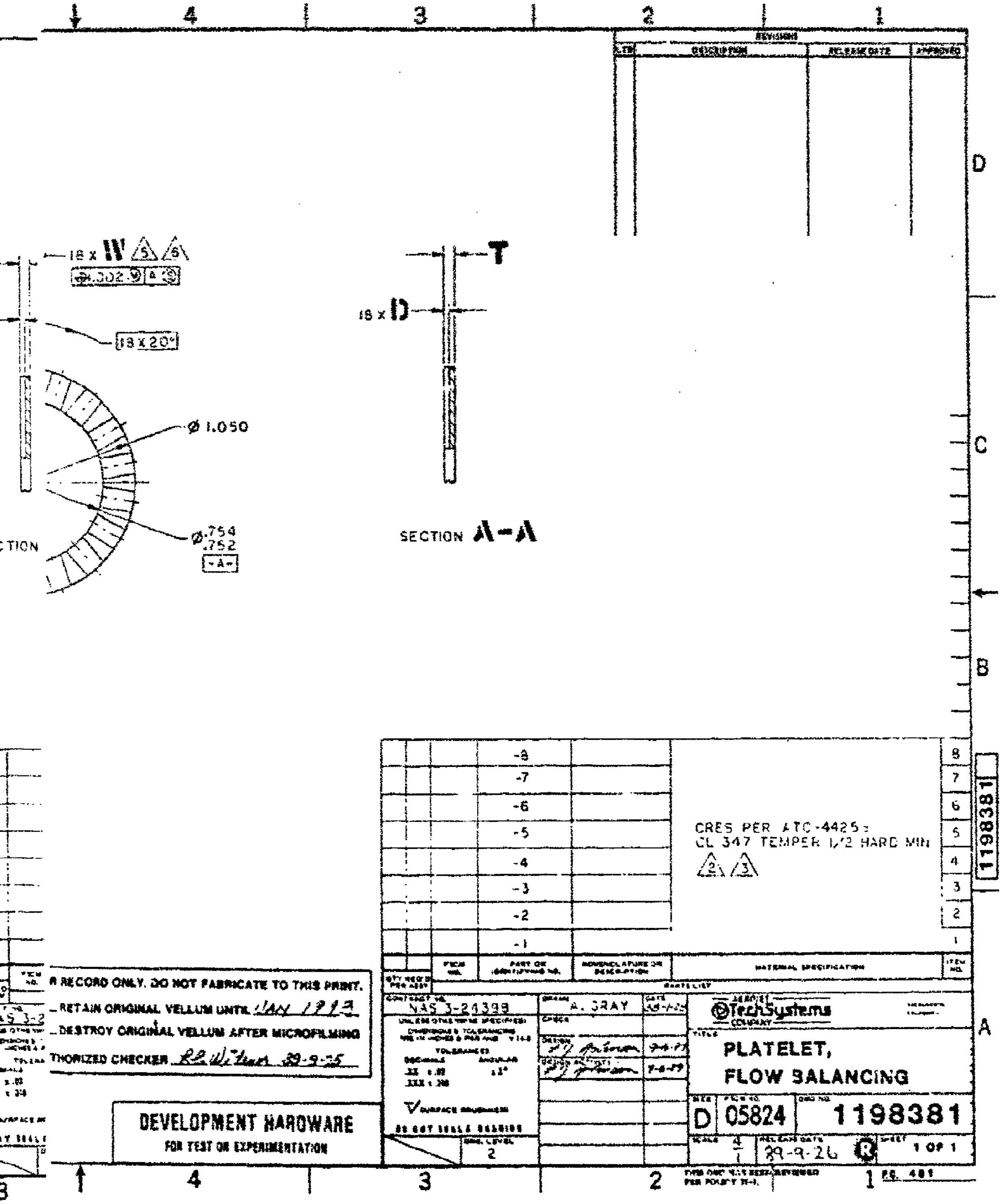

|  |  |  |  |  |  |  |
|---|---|---|---|---|---|---|
|  |  |  | -8 |  |  | 8 |
|  |  |  | -7 |  |  | 7 |
|  |  |  | -6 |  |  | 6 |
|  |  |  | -5 |  | CRES PER ATC-4425;<br>CL 347 TEMPER 1/2 HARD MIN<br>2 3 | 5 |
|  |  |  | -4 |  |  | 4 |
|  |  |  | -3 |  |  | 3 |
|  |  |  | -2 |  |  | 2 |
|  |  |  | -1 |  |  | 1 |
| QTY REQ'D PER ASSY |  | FSCM NO. | PART OR IDENTIFYING NO. | NOMENCLATURE OR DESCRIPTION | MATERIAL SPECIFICATION | ITEM NO. |

PARTS LIST

R RECORD ONLY. DO NOT FABRICATE TO THIS PRINT.
_ RETAIN ORIGINAL VELLUM UNTIL JAN 1993
_ DESTROY ORIGINAL VELLUM AFTER MICROFILMING
THORIZED CHECKER R.L. Wilson 89-9-25

**DEVELOPMENT HARDWARE**
FOR TEST OR EXPERIMENTATION

CONTRACT NO. NAS 3-24399
UNLESS OTHERWISE SPECIFIED
DIMENSIONS & TOLERANCING
ARE IN INCHES & PER ANSI Y 14.5
TOLERANCES
DECIMALS ANGULAR
.XX ±.03 ±1°
.XXX ±.010
SURFACE ROUGHNESS
DO NOT SCALE DRAWING
DWG. LEVEL 2

DRAWN A. GRAY
CHECK
DESIGN
DESIGN ACTIVITY

AEROJET TechSystems COMPANY
TITLE
**PLATELET,**
**FLOW BALANCING**
SIZE D FSCM NO. 05824 DWG NO. 1198381
SCALE 4/1 RELEASE DATE 89-9-26 SHEET 1 OF 1
THIS DWG HAS BEEN REVIEWED PER POLICY III-1.
FG. 481

NOTES:

1 INTERPRET DRAWING PER ATC-STD-4020.

2 ALL DIAMETERS ON A COMMON AXIS ↗ .010 CIRCULAR UNLESS OTHERWISE NOTED.

3 RUNOUT TOLERANCES ARE CIRCULAR UNLESS OTHERWISE NOTED.

4 CLEANLINESS PER ATC-STD-4900, LEVEL 200 INTERNAL CHANNEL SURFACES, LEVEL VC EXTERNAL SURFACES, SSA IS 1.0 SQ. FT.

5 MARK PER AS478-7A WITH 1150787, APPLICABLE DASH NO. AND AEROJET TECHSYSTEMS CO. ASSIGNED SERIAL NO. 1 G/5

6 ELECTRON BEAM WELD PER COGNIZANT ENGINEER. 1 2/D 3/C

7 PENETRANT INSPECT MACHINED SURFACES PER ATC-STD-4942, TYPE I, METHOD A, EXCEPT ETCHING NOT REQUIRED. ACCEPTANCE CRITERIA PER ATC-STD-4004, CLASS I, UNLESS OTHERWISE NOTED.

8 BLEND AS NECESSARY TO PRODUCE A SMOOTH CONTINUOUS CONTOUR BETWEEN ESTABLISHED POINTS. 5 6/C

9 CHAMBER WALL THICKNESS, CHANNEL DEPTH AND NICKEL THICKNESS ARE MEASURED NORMAL TO THE INSIDE WALL SURFACE. 4 4/6

10 PROTECTIVE CLOSURES ARE REQUIRED.

23 PRIOR TO BRAZING, ALTER THERMOCOUPLE (7) PER COGNIZANT ENGINEER.

24 ELECTROFORMED NICKEL THICKNESS AND TOLERANCE IS AS INDICATED, EXCEPT IN CYLINDRICAL REGION OF CHAMBER WHERE THE SPECIFIED OUTER DIAMETER CONTROLS THE THICKNESS OF THE NICKEL.

25 PERFORM PROOF TEST ON FINAL CHAMBER ASSEMBLY AS FOLLOWS:

A. CHANNEL PROOF TEST - USING CLEAN DRY $GN_2$, PRESSURIZE THE COOLANT CIRCUIT TO 250 ± 25 PSIG FOR 5.5 ± 0.5 MINUTES. THERE SHALL BE NO EVIDENCE OF PERMANENT DEFORMATION OR FAILURE OF THE INTERNAL CHAMBER WALL ALONG ANY CHANNEL.

B. CHAMBER PROOF TEST - USING CLEAN DRY $GN_2$, PRESSURIZE THE COOLANT CIRCUIT TO 250 ± 25 PSIG AND PRESSURIZE THE CHAMBER INTERIOR TO 150 ± 25 PSIG FOR 5.5 ± 0.5 MINUTES. THERE SHALL BE NO EVIDENCE OF PERMANENT DEFORMATION OR FAILURE OF THE ELECTROFORMED NICKEL CLOSEOUT.

26 PERFORM LEAK TEST ON FINAL CHAMBER ASSEMBLY BY PRESSURIZING THE COOLANT CIRCUIT WITH CLEAN DRY $GN_2$ TO 125 ± 25 PSIG FOR 5.5 ± 0.5 MINUTES PER ATC-17063, METHOD II. NO EXTERNAL LEAKAGE ALLOWED.

27 WEIGH FINAL CHAMBER ASSEMBLY, LESS PROTECTIVE CLOSURES, AND RECORD WEIGHT TO THE NEAREST 0.01 POUNDS.

28 ACCEPTABLE ALTERNATE MATERIAL IS LOW-CARBON NICKEL UNS NO. N02201 PER ASTM B-160 OR B-162.

29 CHAMBER LINER MATERIAL IS AMZIRC ZIRCONIUM COPPER ALLOY (CDA 150) OF THE FOLLOWING COMPOSITION: 99.8% OFHC COPPER (INCLUDING SILVER AND 0.001% MAXIMUM OXYGEN) AND .10-.20% ZIRCONIA. FORGING REQUIREMENTS: HOT, UPSET AND CROSS GRAIN FORGED WITH DIAMETRAL SECTIONS TO BE TAKEN FOR UNIFORMITY OF MICROSTRUCTURE, GRAIN SIZE, COMPOSITION AND FREEDOM FROM CENTER DEFECTS (BURSTS, CRACKS, VOIDS, PIPING).

30 USE (13) AS FILLER MATERIAL BETWEEN CHAMBER LINER (1) AND MANIFOLD RING (2) PRIOR TO EB WELDING.

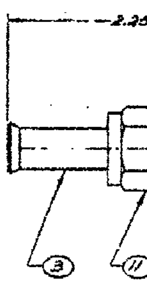

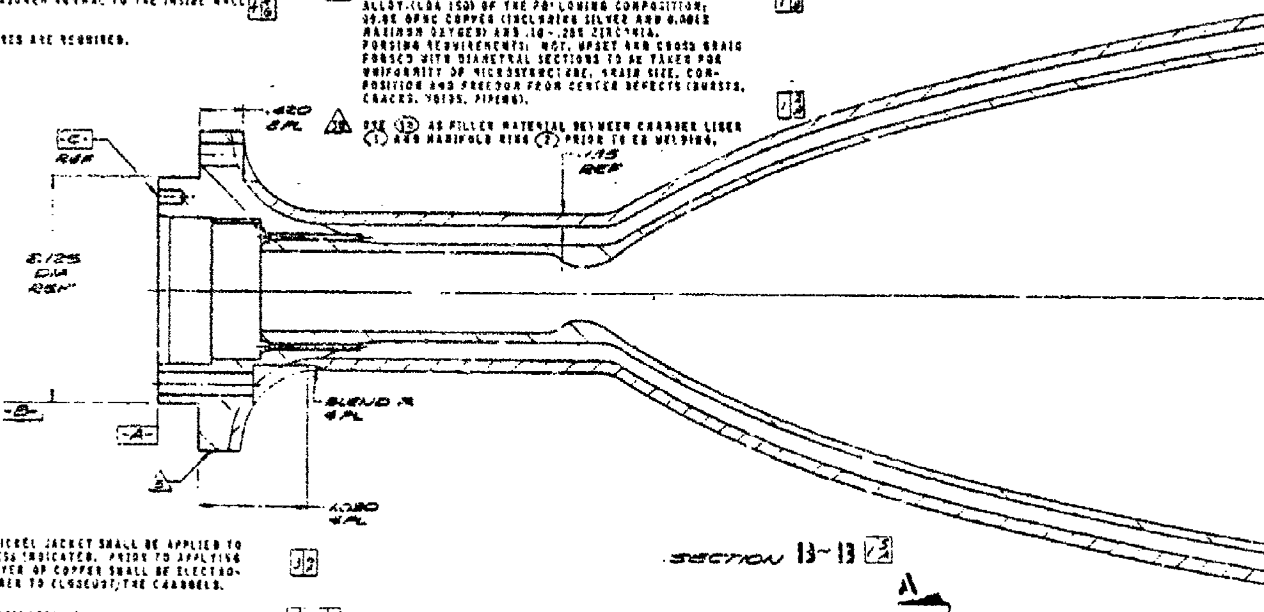

SECTION B-B

11 ELECTROFORMED NICKEL JACKET SHALL BE APPLIED TO AREA AND THICKNESS INDICATED. PRIOR TO APPLYING NICKEL, A THIN LAYER OF COPPER SHALL BE ELECTROFORMED TO THE LINER TO CLOSEOUT THE CHANNELS.

12 MATCH MACHINE INDICATED DIAMETER OF MANIFOLD RING (2) TO MATING DIAMETER OF CHAMBER LINER (1) TO PROVIDE .020 TO .024 INCHES DIAMETRICAL CLEARANCE.

13 MATCH MACHINE INDICATED HEIGHT OF MANIFOLD RING (2) TO MATING HEIGHT OF CHAMBER LINER (1) TO PROVIDE .005 TO .010 INCHES CLEARANCE FIT AT INDICATED SURFACE.

14 MATCH MACHINE INDICATED DIAMETER OF MANIFOLD RING (2) TO MATING DIAMETER OF CHAMBER LINER (1) TO PROVIDE .005 TO .010 INCHES CLEARANCE FIT.

15 MATCH MACHINE INDICATED DIAMETER OF MANIFOLD RING (2) TO MATING DIAMETER OF CHAMBER LINER (1) TO WITHIN .010 INCHES.

16 DRY HYDROGEN OR VACUUM BRAZE PER COGNIZANT ENGINEER, USING (13).

17 PRIOR TO WELDING, CLEAN PER COGNIZANT ENGINEER.

18 VISUALLY INSPECT ELECTRON BEAM WELDS FOR SURFACE DISCONTINUITIES USING 15 POWER MAGNIFICATION.

19 FUSION WELD PER COGNIZANT ENGINEER.

20 PENETRANT INSPECT FUSION WELDS PER ATC-STD-4942, TYPE II, METHOD A. ACCEPTANCE CRITERIA PER ATC-STD-4005, CLASS I.

21 RADIOGRAPHICALLY INSPECT WELDS PER ATC-STD-4095. ACCEPTANCE CRITERIA PER ATC-STD-4097-1.

22 AFTER ELECTRON BEAM WELDING, MACHINE INDICATED SURFACE TO PROVIDE REQUIRED OVERALL CHAMBER LENGTH OF 12.740 INCHES.

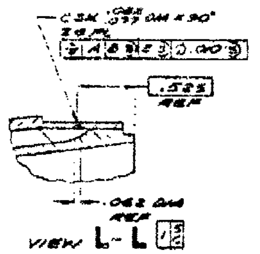

VIEW L-L

(2) REMOVED FOR CLARITY

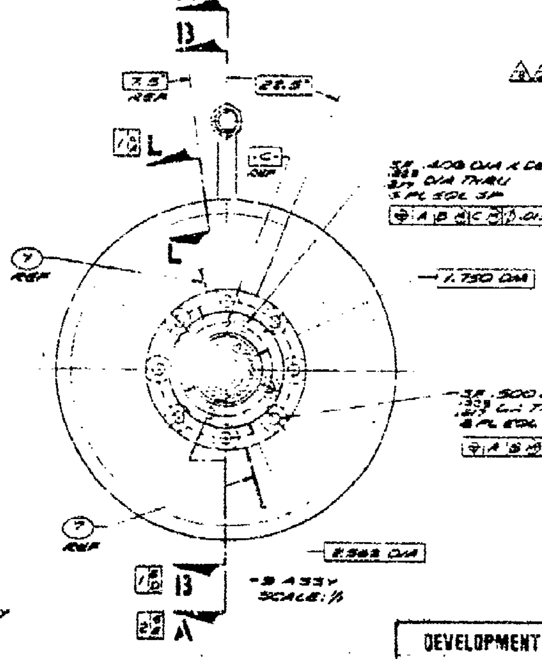

-B ASSY
SCALE: 1/1

DEVELOPMENT
FOR TEST OR EXPE

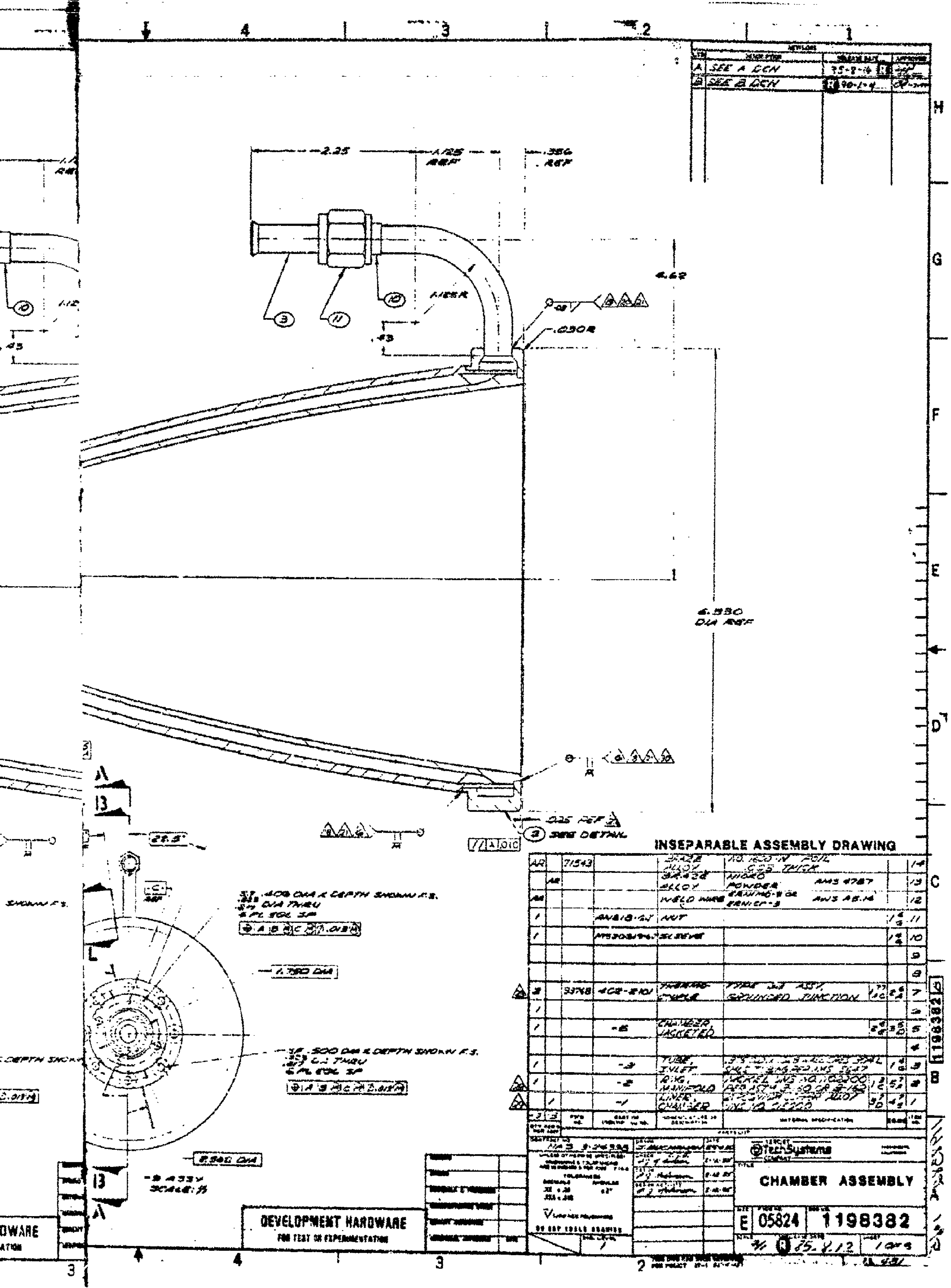

INSEPARABLE ASSEMBLY DRAWING

| | | | | | | | |
|---|---|---|---|---|---|---|---|
| AR | | 71543 | | BRAZE ALLOY | NO. 1CO-N FOIL .002 THICK | | 14 |
| | AR | | | BRAZE ALLOY | NICRO POWDER AMS 4787 | | 13 |
| AR | | | | WELD WIRE | ERNiMO-3 OR ERNiCr-3 AWS A5.14 | | 12 |
| 1 | | | AN818-4J | NUT | | 1 4/G | 11 |
| 1 | | | MS20819-4J | SLEEVE | | 1 4/G | 10 |
| | | | | | | | 9 |
| | | | | | | | 8 |
| 3 | | 33768 | 4CG-2101 | THERMOCOUPLE | TYPE J ASSY, GROUNDED JUNCTION | 7/1C 2 6/A | 7 |
| 1 | | | | | | | 6 |
| 1 | | | -5 | CHAMBER JACKETED | | 2 6/G 3 5/D | 5 |
| | | | | | | | 4 |
| 1 | | | -3 | TUBE, INLET | [illegible] | 1 4/G | 3 |
| 1 | | | -2 | RING, MANIFOLD | NICKEL AMS [illegible] | 1 3/C 5 7/A | 2 |
| | 1 | | -1 | LINER, CHAMBER | [illegible] ALLOY | 3 7/D 4 7/A | 1 |
| -3 | -3 | | | | MATERIAL SPECIFICATION | | |

PARTS LIST

TechSystems COMPANY

CHAMBER ASSEMBLY

E 05824 1198382

3/1 R 85.8.12 1 OF 3

DEVELOPMENT HARDWARE
FOR TEST OR EXPERIMENTATION

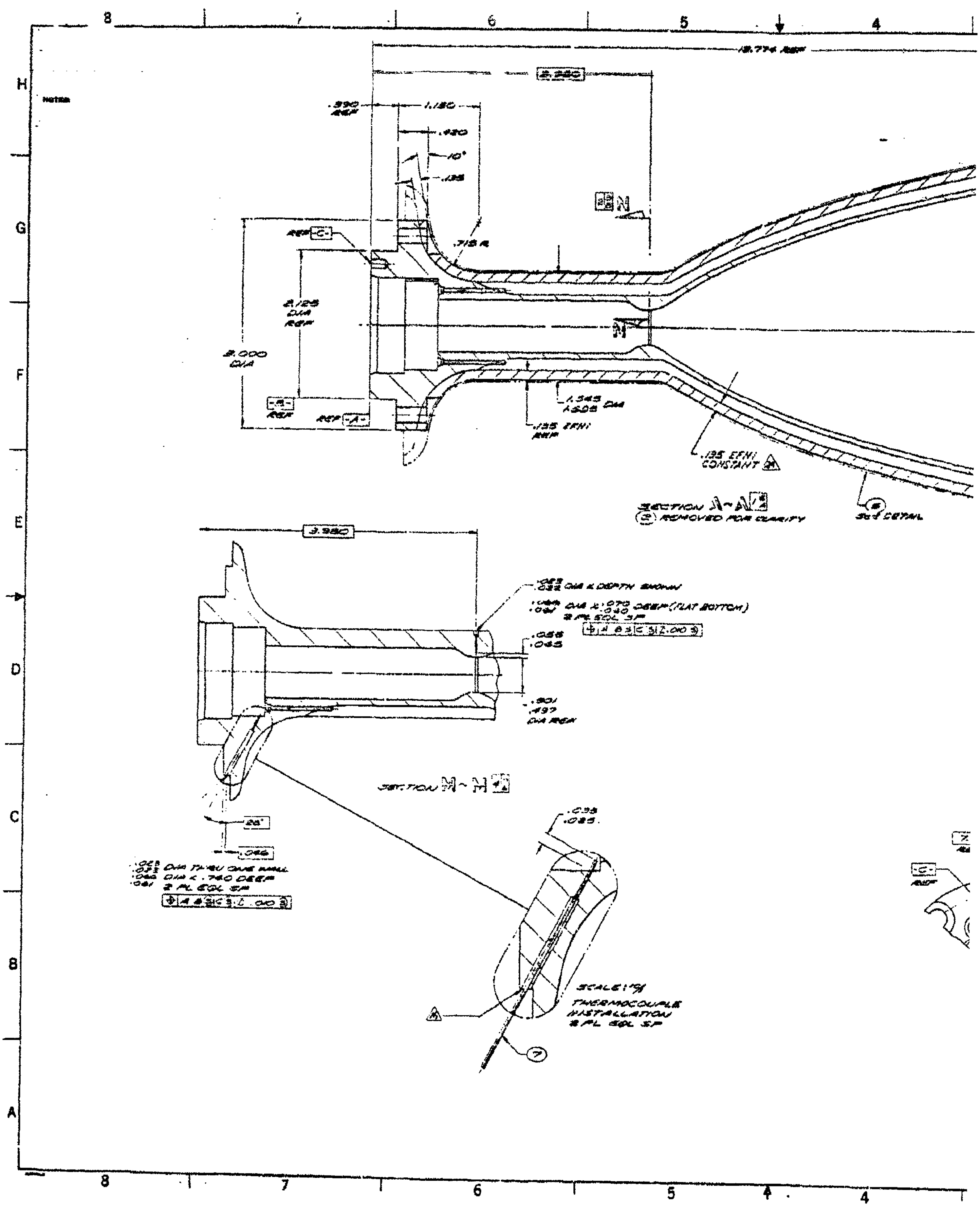

NOTES
19.774 REF
2.280
.390 REF
1.180
.420
10°
.135
.715 R
REF -C-
2.125 DIA REF
3.000 DIA
-B- REF
REF -A-
1.545 1.505 DIA
.135 EFNI REF
.135 EFNI CONSTANT
SECTION A~A
⑦ REMOVED FOR CLARITY
⑥ SEE DETAIL
3.980
.028 .032 DIA X DEPTH SHOWN
.068 .092 DIA X .070 .040 DEEP (FLAT BOTTOM) 2 PL EQL SP
.055 .045
.501 .497 DIA REF
SECTION N~N
28°
.046
.028 .032 DIA THRU ONE WALL
.060 .061 DIA X .740 DEEP 2 PL EQL SP
.035 .025
SCALE 10/1
THERMOCOUPLE INSTALLATION 2 PL EQL SP
⑦
8
7
6
5
4
H
G
F
E
D
C
B
A

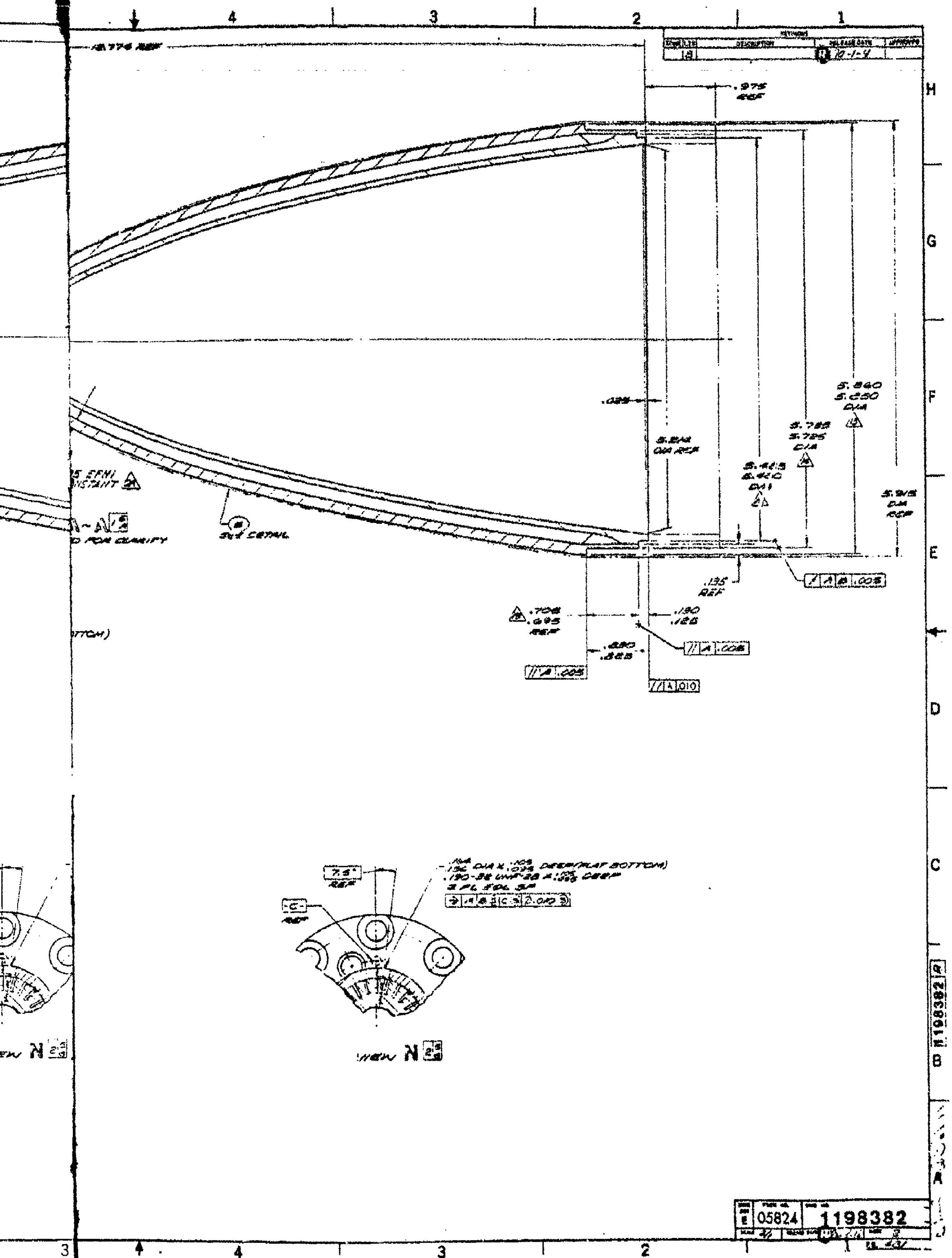
4
3
2
1
REVISIONS
DESCRIPTION
RELEASE DATE
APPROVED
10-1-4
H
G
F
E
D
C
B
A
.975 REF
.025
5.841 DIA REF
5.415
5.410
DIA
5.785
5.725
DIA
5.840
5.830
DIA
5.915 DIA REF
/ A B .005
.135 REF
.706
.695
REF
.130
.126
// A .006
.830
.825
// A .005
// A .010
SEE DETAIL
7.5° REF
-C- REF
3 PL EQL SP
VIEW N
1198382
05824
1198382

NOTES

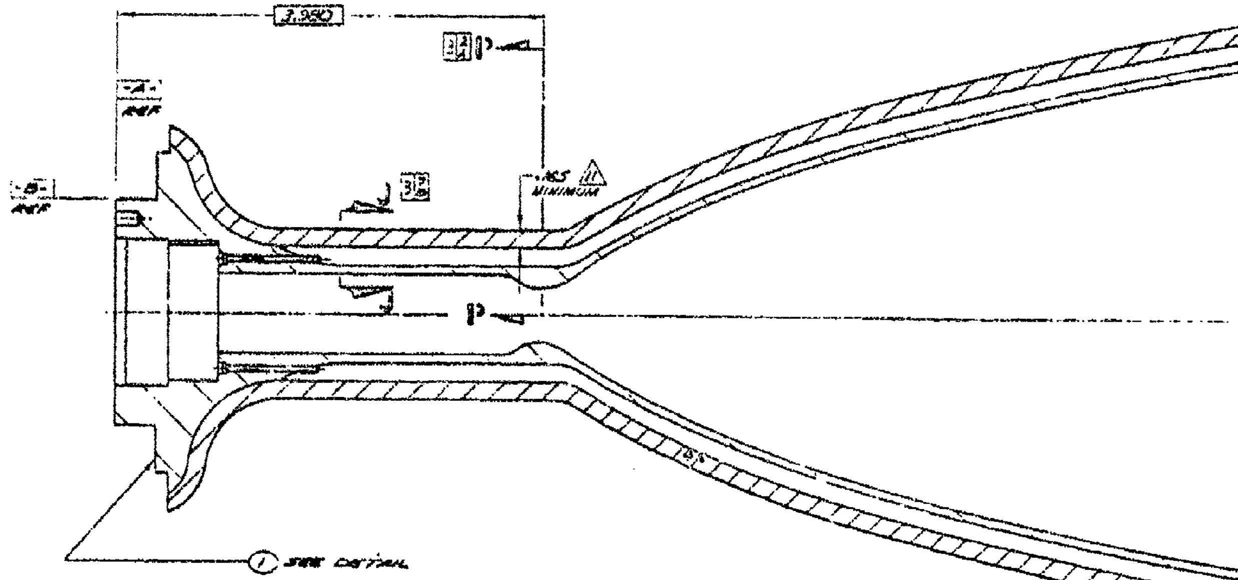

⑤ DETAIL

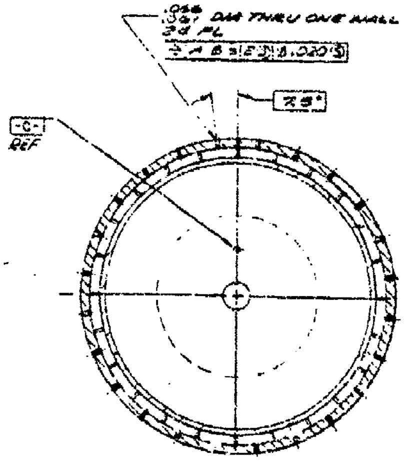

SECTION K~K
SCALE 1/2

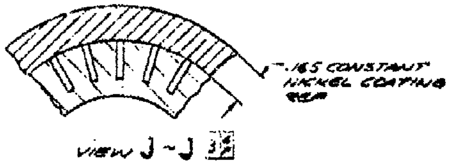

VIEW J ~ J
SCALE 4/1

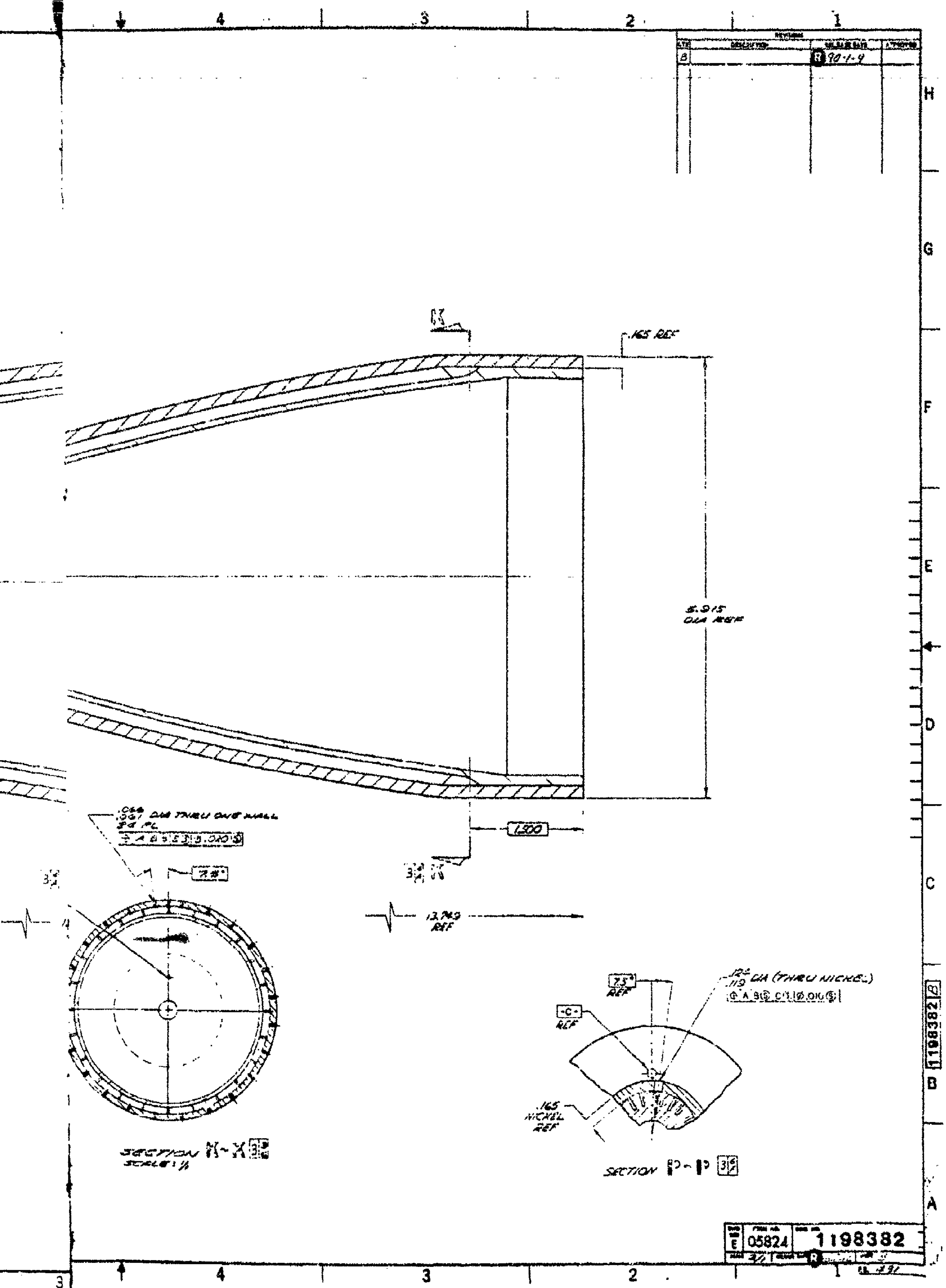
B
90-1-4
.165 REF
5.915 DIA REF
.066 .061 DIA THRU ONE WALL 34 PL
7.5°
1.500
13.749 REF
SECTION K-K
SCALE 1/1
7.5° REF
-C- REF
.125 .119 DIA (THRU NICKEL)
.165 NICKEL REF
SECTION P-P
1198382 B
E 05824
1198382

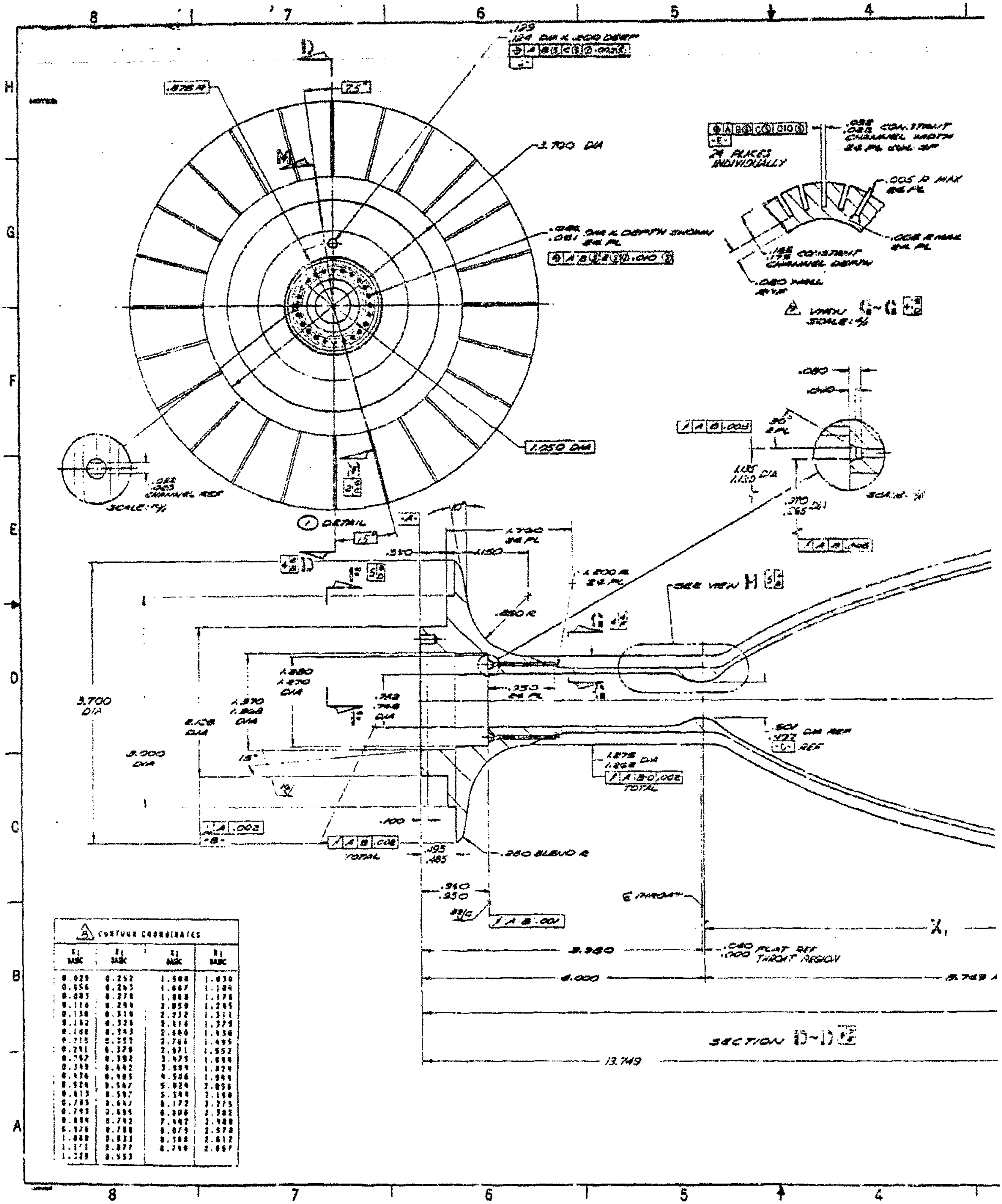

B CONTOUR COORDINATES

| X₁ BASIC | R₁ BASIC | X₁ BASIC | R₁ BASIC |
|---|---|---|---|
| 0.028 | 0.252 | 1.508 | 1.030 |
| 0.056 | 0.263 | 1.687 | 1.104 |
| 0.083 | 0.278 | 1.868 | 1.178 |
| 0.110 | 0.295 | 2.050 | 1.245 |
| 0.136 | 0.310 | 2.232 | 1.311 |
| 0.162 | 0.326 | 2.416 | 1.375 |
| 0.188 | 0.343 | 2.600 | 1.430 |
| 0.215 | 0.357 | 2.766 | 1.495 |
| 0.241 | 0.370 | 2.971 | 1.552 |
| 0.267 | 0.382 | 3.475 | 1.694 |
| 0.349 | 0.442 | 3.999 | 1.824 |
| 0.436 | 0.485 | 4.506 | 1.949 |
| 0.524 | 0.547 | 5.024 | 2.056 |
| 0.613 | 0.597 | 5.599 | 2.160 |
| 0.703 | 0.647 | 6.172 | 2.275 |
| 0.793 | 0.695 | 6.808 | 2.382 |
| 0.884 | 0.742 | 7.492 | 2.480 |
| 0.976 | 0.788 | 8.079 | 2.573 |
| 1.068 | 0.833 | 8.388 | 2.612 |
| 1.171 | 0.877 | 8.749 | 2.657 |
| 1.229 | 0.953 |  |  |

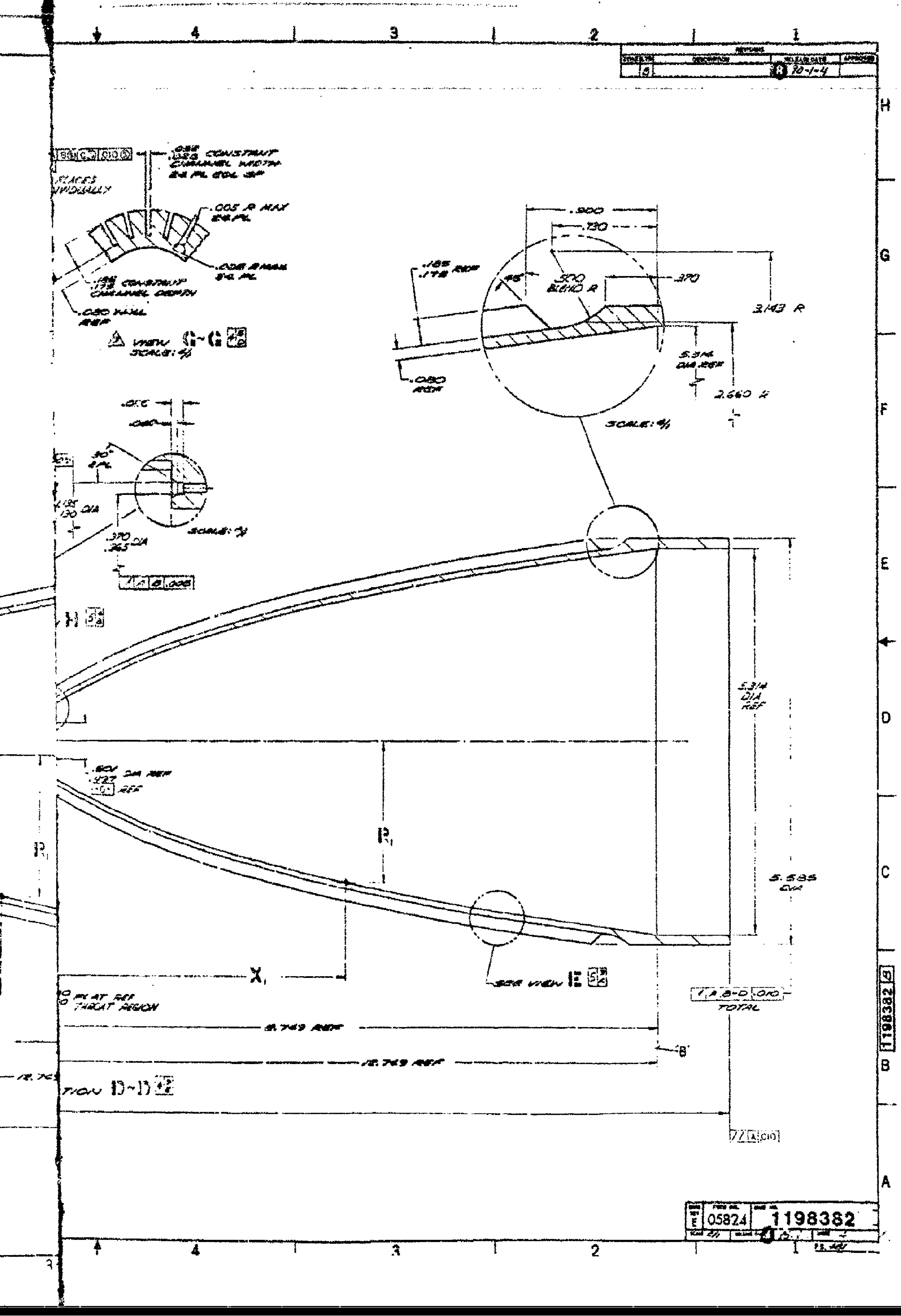
4
3
2
1
B
10-1-4
H
G
F
E
D
C
B
A
.052
.048 CONSTANT
CHANNEL WIDTH
24 PL EQL SP
.005 R MAX
24 PL
.008 R MAX
24 PL
.186
.176 CONSTANT
CHANNEL DEPTH
.080 WALL
REF
VIEW G-G
SCALE: 4/1
.900
.730
.185
.176 REF
45°
.500
BLEND R
.370
3.143 R
5.314
DIA REF
2.660 R
.080
REF
SCALE: 4/1
30°
4 PL
.135
.130 DIA
.370
.365 DIA
SCALE: 4/1
.006
H
5.314
DIA
REF
.601 DIA REF
.427
R₁
R₁
5.585
DIA
X₁
SEE VIEW E
.010
TOTAL
THROAT REGION
8.749 REF
12.749 REF
B
VIEW D-D
.010
05824
1198382
1198382
2/1

NOTES:

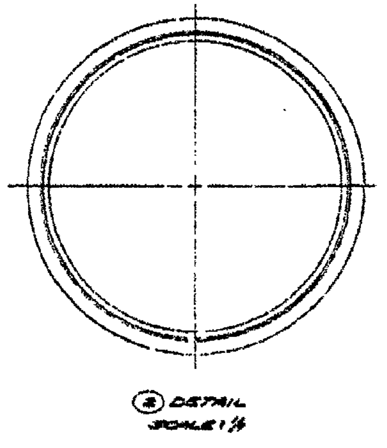

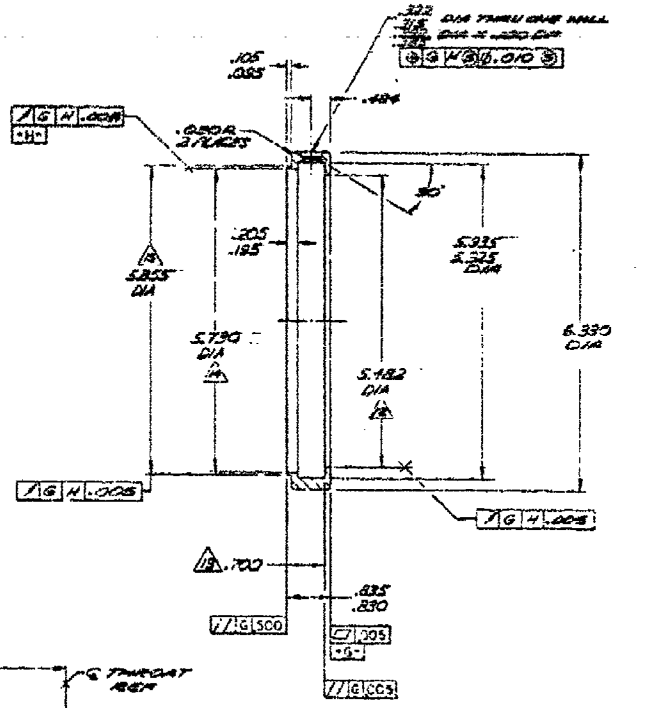

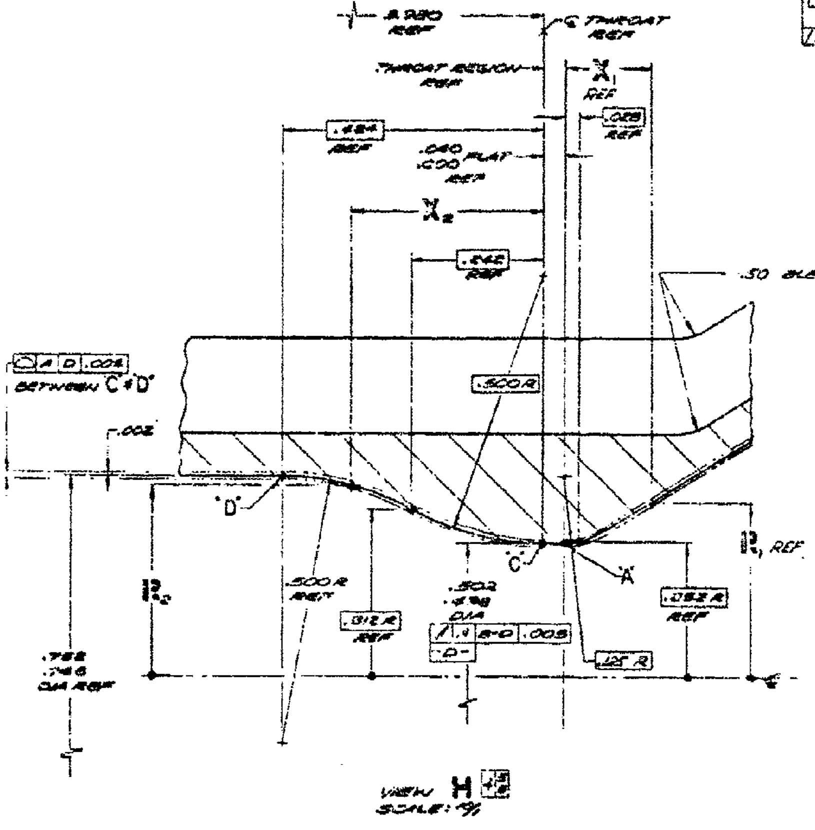

CONTOUR COORDINATES

| X₂ BASIC | R₂ BASIC |
|---|---|
| .242 | .312 |
| .249 | .316 |
| .257 | .320 |
| .265 | .324 |
| .273 | .328 |
| .281 | .337 |
| .289 | .335 |
| .297 | .339 |
| .305 | .342 |
| .313 | .345 |
| .321 | .348 |
| .333 | .350 |
| .338 | .353 |
| .340 | .356 |
| .355 | .358 |
| .363 | .360 |
| .372 | .362 |
| .380 | .364 |
| .389 | .366 |
| .397 | .367 |
| .406 | .369 |
| .414 | .370 |
| .423 | .371 |
| .431 | .372 |
| .440 | .373 |
| .449 | .374 |
| .458 | .374 |
| .467 | .375 |
| .475 | .375 |
| .484 | .375 |

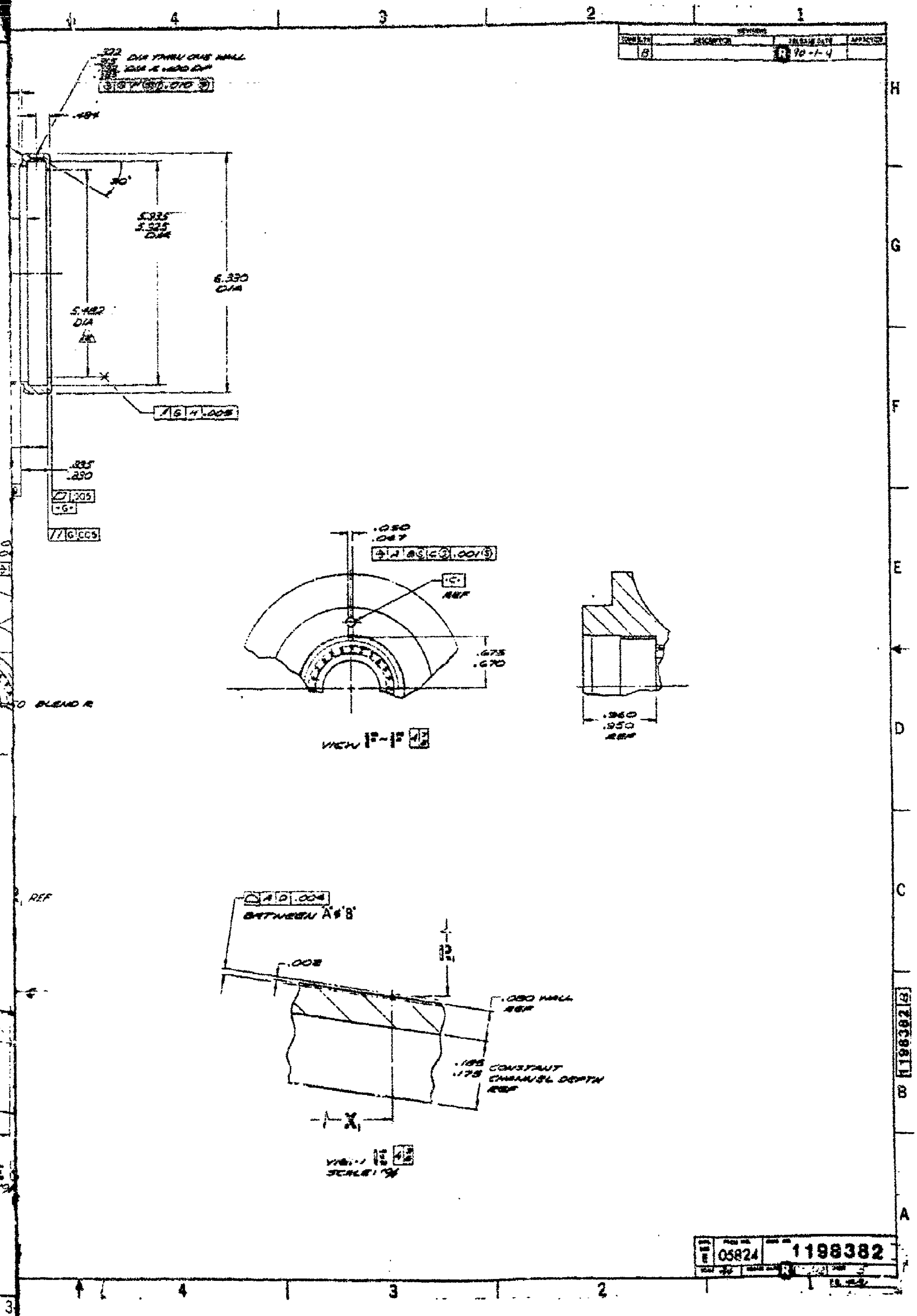

REVISIONS
B
90-1-4
.322 DIA THRU ONE WALL
.494
30°
5.935
5.925
DIA
6.330
DIA
5.482
DIA
.335
.330
-G-
BLEND R
.050
.047
-C-
REF
.675
.670
VIEW F-F
.960
.950
REF
REF
BETWEEN A & B
.008
.080 WALL
REF
.185 CONSTANT
.175 CHANNEL DEPTH
REF
X1
SCALE
05824
1198382
1198382 B
H
G
F
E
D
C
B
A
4
3
2
1

NOTES

1. INTERPRET DRAWING PER ATC-STD-4926.
2. ALL DIAMETERS ⌭ A B .010 CIRCULAR, UNLESS OTHERWISE NOTED.
3. MARK PER AS478-7 WITH INFORMATION SHOWN NEAR INLET PORT AND NEAR CHAMBER PRESSURE PORT, AS SHOWN.
4. MARK PER AS478-37 WITH 1196583 AND APPLICABLE DASH NUMBER.

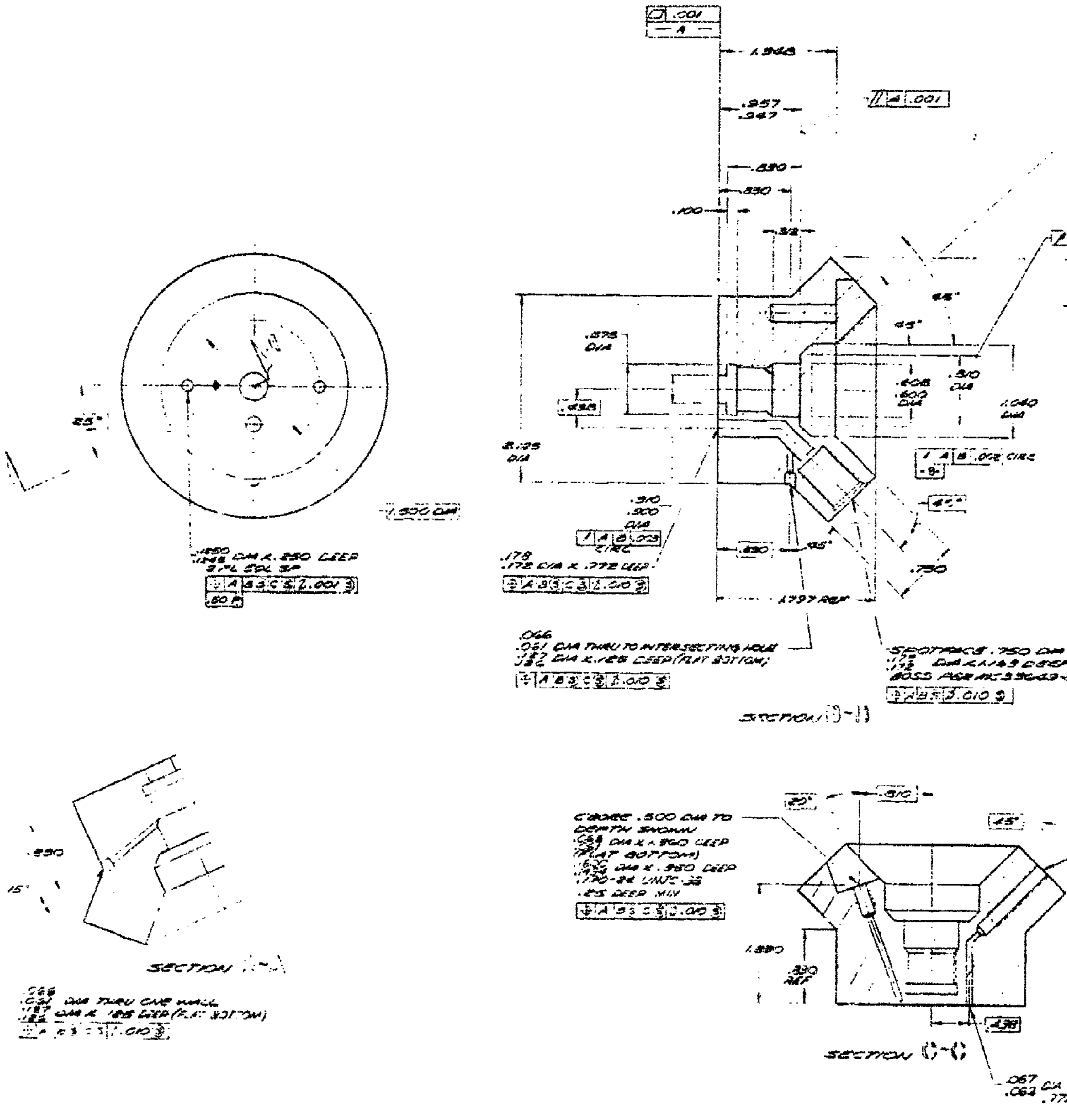

DEVELOPMENT HARD

FOR TEST OR EXPERIMENTAT

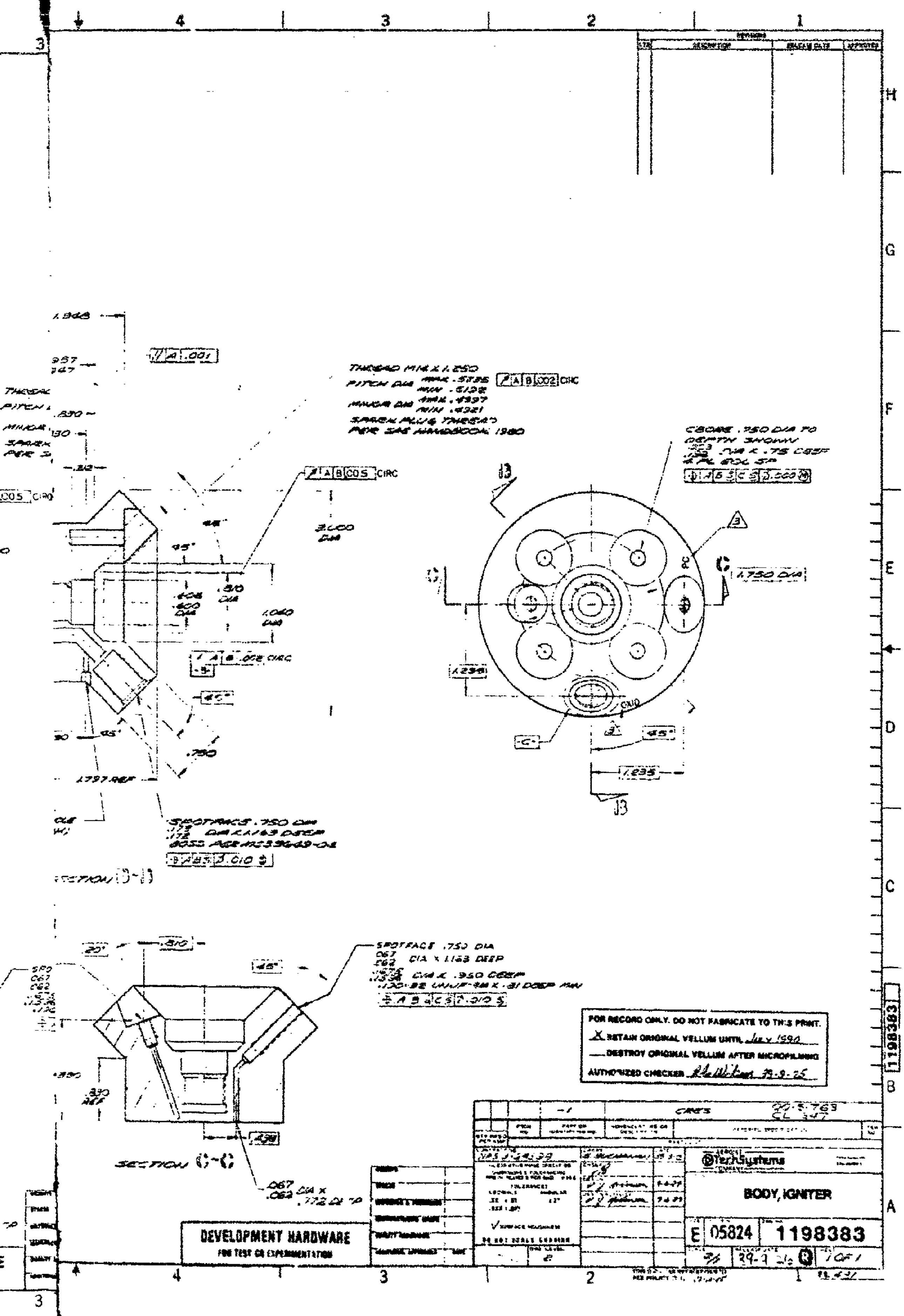

FOR RECORD ONLY. DO NOT FABRICATE TO THIS PRINT.
X RETAIN ORIGINAL VELLUM UNTIL July 1990
— DESTROY ORIGINAL VELLUM AFTER MICROFILMING
AUTHORIZED CHECKER 79-9-25

DEVELOPMENT HARDWARE
FOR TEST OR EXPERIMENTATION

-1
CRES
22-5-763
CL 347

TechSystems

BODY, IGNITER

E 05824 1198383

1 OF 1

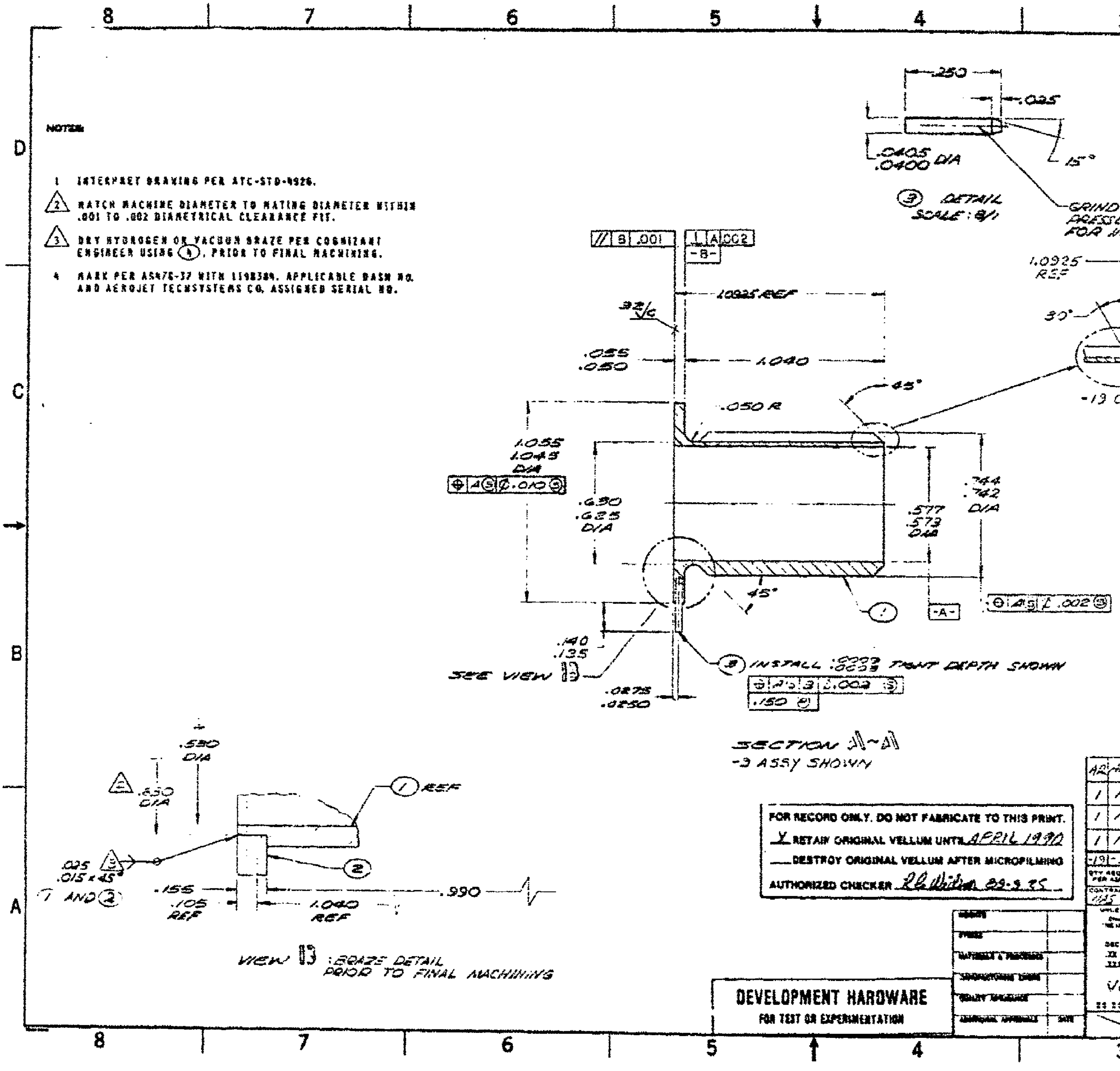

NOTES:

1 INTERPRET DRAWING PER ATC-STD-4926.

2 MATCH MACHINE DIAMETER TO MATING DIAMETER WITHIN .001 TO .002 DIAMETRICAL CLEARANCE FIT.

3 DRY HYDROGEN OR VACUUM BRAZE PER COGNIZANT ENGINEER USING ④, PRIOR TO FINAL MACHINING.

4 MARK PER AS478-37 WITH 1198384. APPLICABLE DASH NO. AND AEROJET TECHSYSTEMS CO. ASSIGNED SERIAL NO.

FOR RECORD ONLY. DO NOT FABRICATE TO THIS PRINT.

X RETAIN ORIGINAL VELLUM UNTIL APRIL 1990

___ DESTROY ORIGINAL VELLUM AFTER MICROFILMING

AUTHORIZED CHECKER *RC Whitm 89-3-25*

**DEVELOPMENT HARDWARE**

FOR TEST OR EXPERIMENTATION

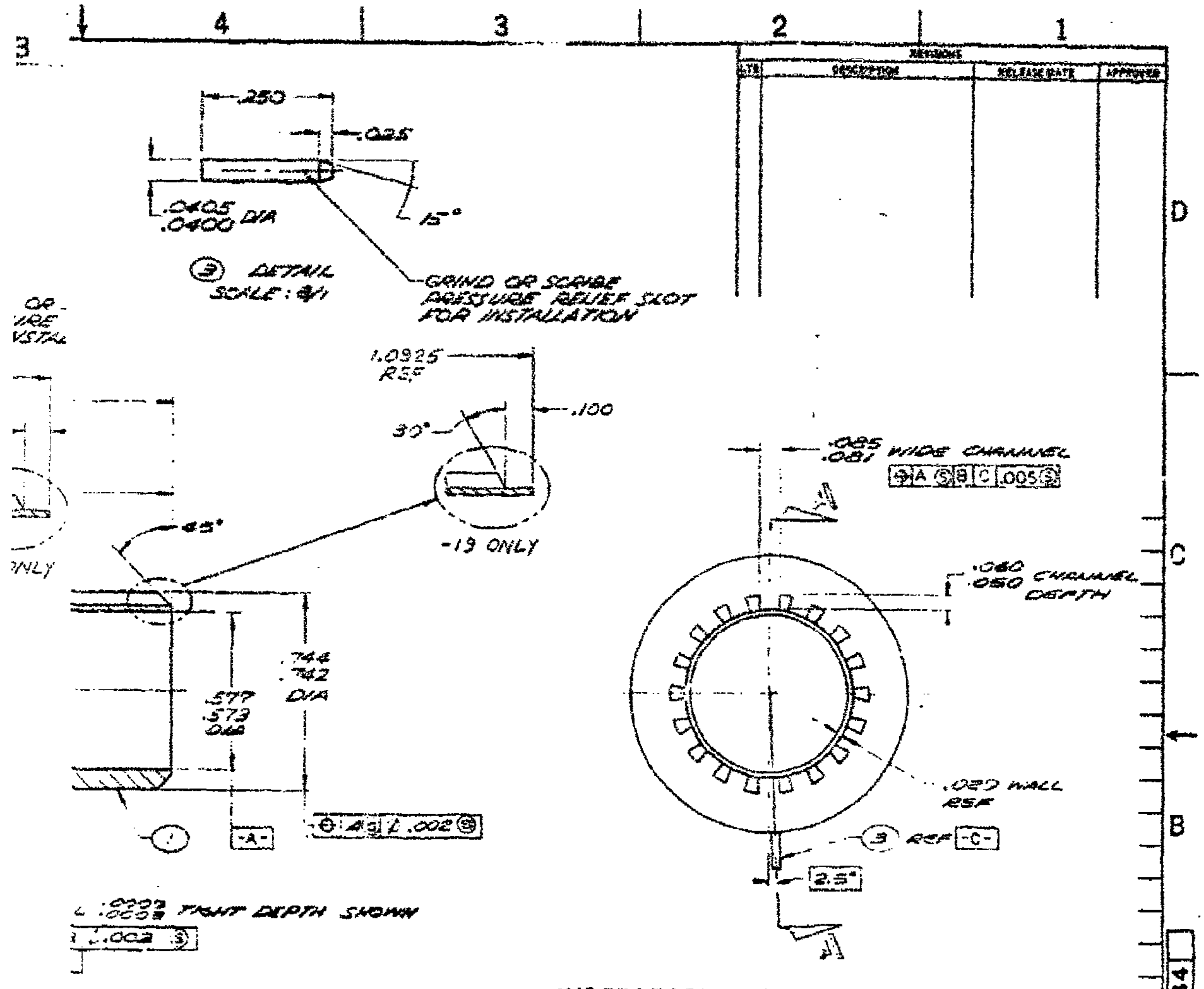

INSEPARABLE ASSEMBLY DRAWING

| QTY REQD PER ASSY -19 | -3 | FSCM NO. | PART OR IDENTIFYING NO. | NOMENCLATURE OR DESCRIPTION | MATERIAL SPECIFICATION | ITEM NO. |
|---|---|---|---|---|---|---|
| AR | AR | | | BRAZE FILLER MAT'L | .020 DIA WIRE REC AMS 4787 | 4 |
| 1 | 1 | | -3 | PIN | 300 SERIES CRES QQ-S-763 OR QQ-S-765 | 3 |
| 1 | 1 | | -2 | FLANGE | NICKEL UNS N02200 OR LOW CARBON NICKEL UNS N02201 PER ASTM B-160 | 2 |
| 1 | 1 | | -1 | BARREL | | 1 |

PARTS LIST

CORD ONLY. DO NOT FABRICATE TO THIS PRINT.
TAIN ORIGINAL VELLUM UNTIL APRIL 1990
STROY ORIGINAL VELLUM AFTER MICROFILMING
UZED CHECKER RB Wilson 89-9-25

IENT HARDWARE
R EXPERIMENTATION

CONTRACT NO. NAS 3-24372
UNLESS OTHERWISE SPECIFIED: DIMENSIONS & TOLERANCING PER ANSI Y14.5
TOLERANCES
DECIMALS .XX ±.03 .XXX ±.010
ANGULAR ±1°
SURFACE ROUGHNESS
DO NOT SCALE DRAWING
DWG. LEVEL 2

DRAWN S. BUCHANAN
CHECK
DESIGN 94-77
DESIGN ACTIVITY 9-6-77

TechSystems COMPANY

TITLE CHAMBER SLEEVE ASSEMBLY

SIZE D
FSCM NO. 05824
DWG NO. 1198384
SCALE 4/1
RELEASE DATE 89-9-26
SHEET 1 OF 1
THIS DWG HAS BEEN REVIEWED PER POLICY
481

NOTES:

1 INTERPRET DRAWING PER ATC-STD-4926.

2 DRY HYDROGEN OR VACUUM BRAZE PER COGNIZANT ENGINEER, USING ⑭.

3 ALL DIAMETERS ↗ A B .01 CIRCULAR, UNLESS OTHERWISE NOTED.

4 CLEANLINESS PER ATC-STD-4944, LEVEL 200. SSA IS 1.0 SQ. FT.

5 MARK PER AS478-7 WITH 1190305. APPLICABLE DASH NO. AND AEROJET TECHSYSTEMS CO. ASSIGNED SERIAL NO.

6 ALL DIMENSIONS APPLY AFTER BRAZING, UNLESS OTHERWISE INDICATED.

7 ITEM ⑬ IS USED FOR STACKING, ALIGNING AND BRAZING PLATELETS ONLY. REMOVE ⑬ AFTER BRAZING AND PRIOR TO FINAL MACHINING.

8 ALTER AS SHOWN.

9 NICKEL STRIKE PLATELETS USING ⑮. STACK PLATELETS PER STACKING SEQUENCE (VIEW A) AND BOND STACK ASSY PER COGNIZANT ENGINEER.

10 MIX PARTS "A" AND "B" OF ⑮ PER MANUFACTURER'S INSTRUCTIONS TO OBTAIN PROPER ELECTROLESS NICKEL SOLUTION. MANUFACTURER IS ANGNET INC. 2250-? GLADWICK, COMPTON, CA. 90220.

11 DRY HYDROGEN OR VACUUM BRAZE BONDED PLATELET STACK ASSY TO IGNITER BODY ① USING ⑭ PER COGNIZANT ENGINEER.

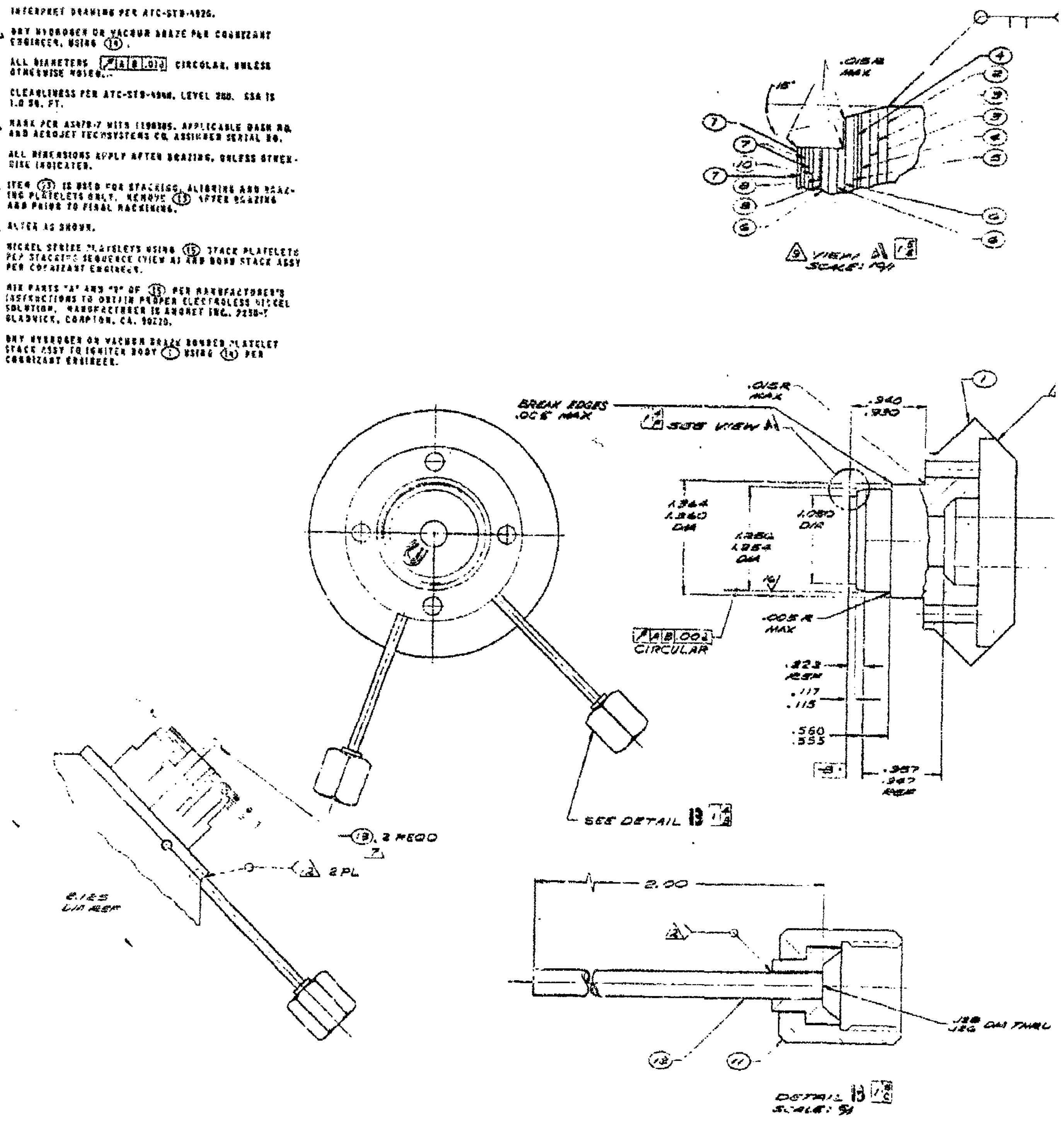

DEVELOPMEN

FOR TEST OR EXP

| LTR | DESCRIPTION | RELEASE DATE | APPROVED |
|---|---|---|---|
| | | | |

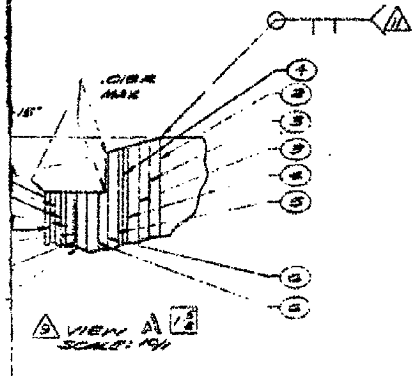

VIEW A 1/5 SCALE: 10/1

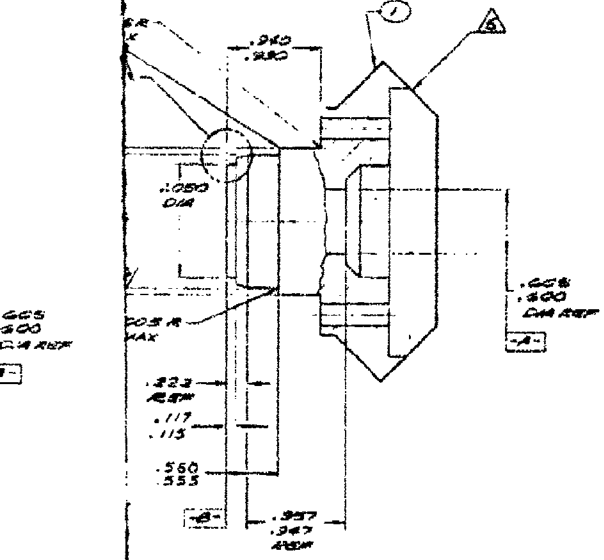

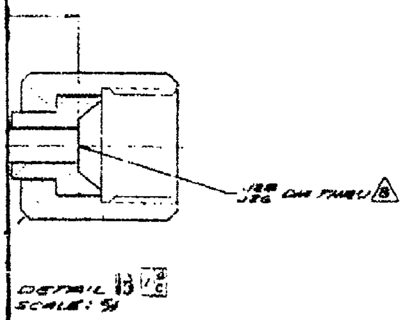

DETAIL B 1/2 SCALE: 5/1

FOR RECORD ONLY, DO NOT FABRICATE TO THIS PRINT.
X RETAIN ORIGINAL VELLUM UNTIL APRIL 1990
___ DESTROY ORIGINAL VELLUM AFTER MICROFILMING
AUTHORIZED CHECKER [illegible] 89-9-25

INSEPARABLE ASSEMBLY DRAWING

| | -3 | FIND NO. | PART OR IDENTIFYING NO. | NOMENCLATURE OR DESCRIPTION | MATERIAL SPECIFICATION | ZONE | ITEM NO. |
|---|---|---|---|---|---|---|---|
| 10 | AR | | | BRAZE ALLOY | ANCHET 1365 [illegible] | | 15 |
| | AR | | | BRAZE ALLOY | ELECTROLESS NICKEL FOIL .001 THICK PER AMS 4737 | | 14 |
| | 2 | | MS9390-300 | PIN | | [illegible] | 13 |
| | 2 | | -11 | TUBE | .125 DIA X .020 WALL CRES 347 AMS 5556 TYPE I | [illegible] | 12 |
| | 2 | | -10 | CAP | ALTEC FROM [illegible] 5565, CHIT NO 4-1290 | [illegible] | 11 |
| | 1 | | 1198833-8 | PLATELET, FUEL DISCH | | [illegible] | 10 |
| | | | | | | | 9 |
| | 2 | | 1198833-7 | PLATELET MIXER -5 | | [illegible] | 8 |
| | 4 | | -6 | PLATELET FACE | | [illegible] | 7 |
| | 3 | | -5 | PLATELET SCREEN | [illegible] | [illegible] | 6 |
| | 1 | | -4 | PLATELET OXID DISCH | | [illegible] | 5 |
| | 2 | | -3 | PLATELET MIXING | | [illegible] | 4 |
| | 2 | | -2 | PLATELET OXID DISCH | | [illegible] | 3 |
| | 1 | | 1198833-1 | PLATELET BOTTOM | | [illegible] | 2 |
| | 1 | | 1198859-1 | BODY - IGNITER | | [illegible] | 1 |
| QTY REQD FOR ASSY | | | | | | | |

PARTS LIST

CONTRACT NO. NAS 3-22848

UNLESS OTHERWISE SPECIFIED DIMENSIONS & TOLERANCING ARE IN INCHES & PER ANSI Y14.5
TOLERANCES
DECIMALS .XX ±.03 .XXX ±.010
ANGULAR ±1°
✓ SURFACE ROUGHNESS
DO NOT SCALE DRAWING

DWG LEVEL 2

DRAWN W. BUCHANAN 79-4-3
CHECK
[illegible] 2-6-79
DESIGN ACTIVITY [illegible] 4-6-79

AEROJET TechSystems COMPANY
SACRAMENTO, CALIFORNIA

TITLE IGNITER BODY AND PLATELET ASSEMBLY

SIZE E | CODE IDENT 05824 | DWG NO. 1198385

SCALE 5/1 | RELEASE DATE 89-9-26 | SHEET 1 OF 1

1198385

DEVELOPMENT HARDWARE
FOR TEST OR EXPERIMENTATION

ROWARE
TATION

NOTES:

1 INTERPRET DRAWING PER ATC-STD-0026.

2 MARK PER AS478-37 WITH [illegible] AND APPLICABLE DASH NUMBER.

3. MARK PER AS478-7 WITH INFORMATION SHOWN NEAR INLET PORT AND NEAR CHAMBER PRESSURE PORT, AS SHOWN.

4 ALL RUNOUT TOLERANCES ARE CIRCULAR, UNLESS OTHERWISE NOTED.

5 ALL DIAMETERS ⌭ A B .010 CIRCULAR, UNLESS OTHERWISE NOTED.

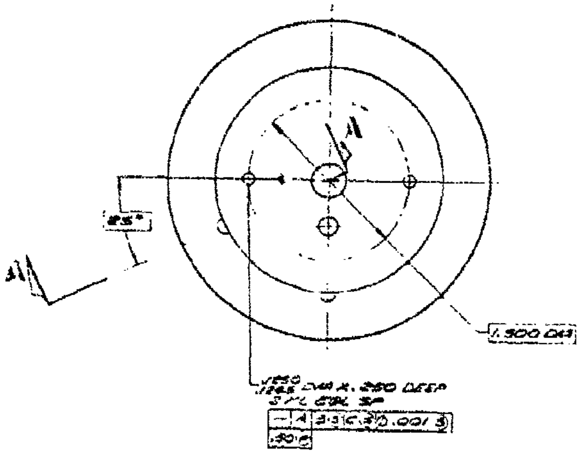

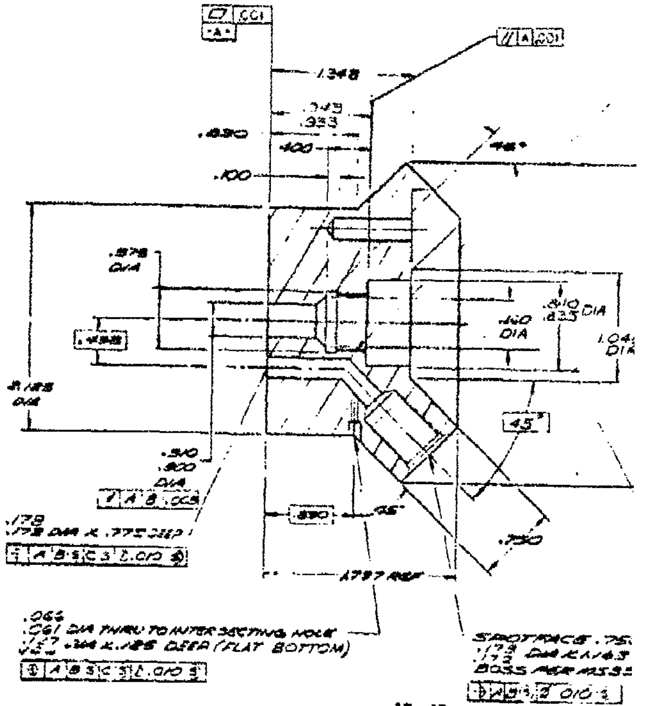

SECTION B-B

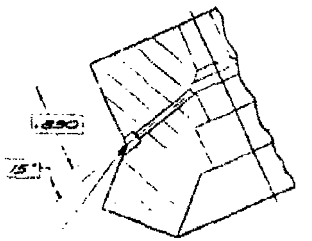

SECTION A-A

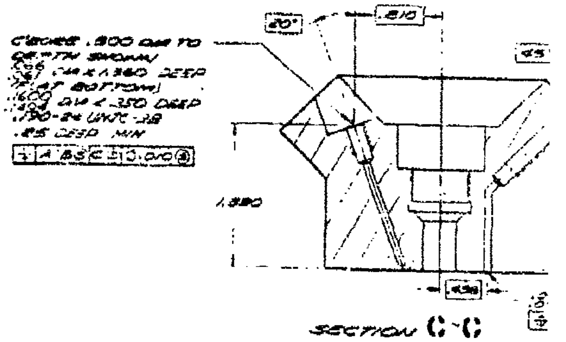

SECTION C-C

DEVELOPMENT
FOR TEST OR EXP

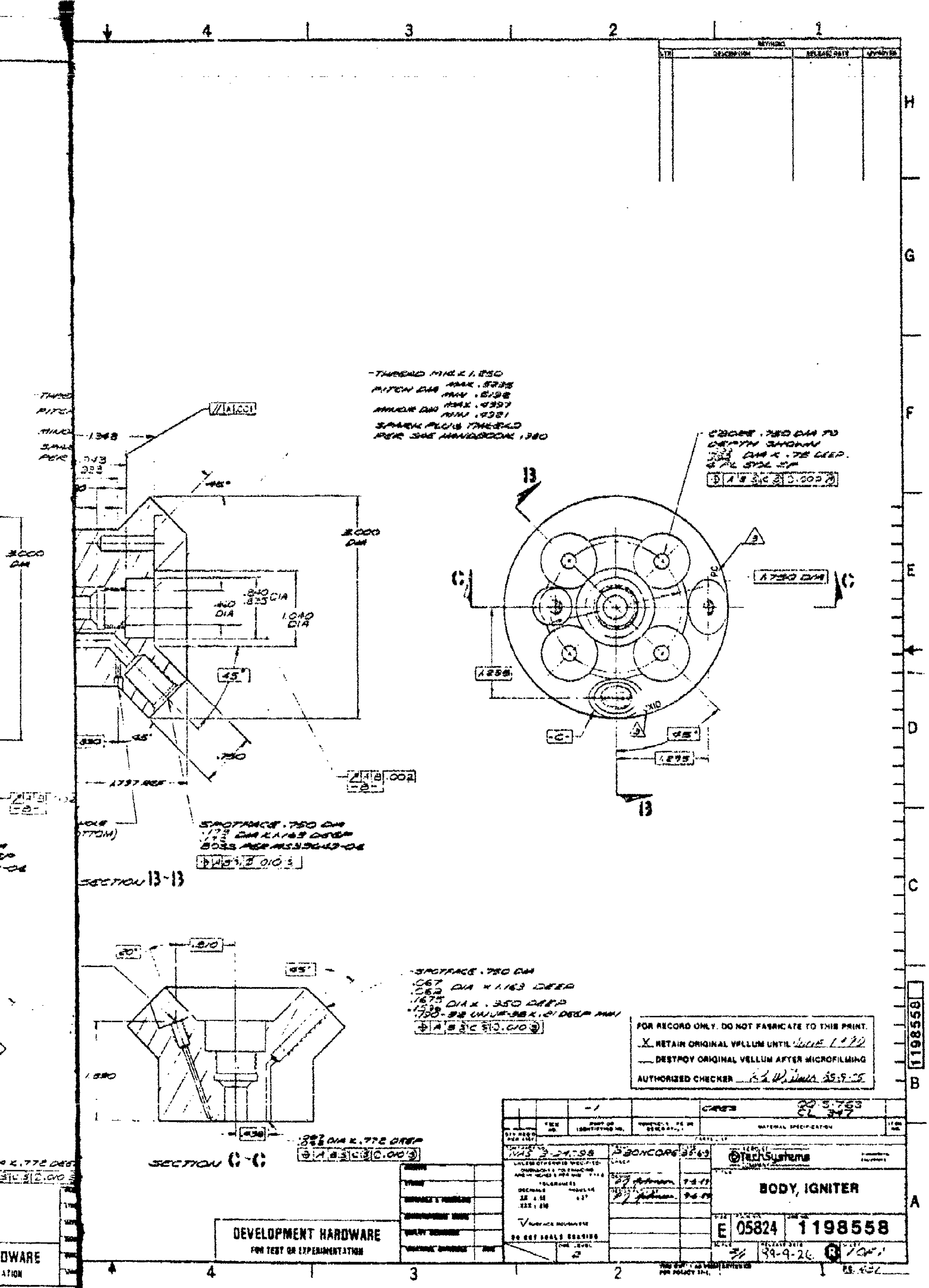

FOR RECORD ONLY. DO NOT FABRICATE TO THIS PRINT.

X RETAIN ORIGINAL VELLUM UNTIL June 1990

___ DESTROY ORIGINAL VELLUM AFTER MICROFILMING

AUTHORIZED CHECKER R.L. Williams 95-9-25

| | | | | |
|---|---|---|---|---|
| -1 | | CRES | QQ-S-763 CL 347 | |
| PART OR IDENTIFYING NO. | NOMENCLATURE OR DESCRIPTION | | MATERIAL SPECIFICATION | ITEM NO. |

NAS 3-24795

P30NCORE 95-6-9

P.J. Johnson 7-6-95

P.J. Johnson 9-6-95

TechSystems

BODY, IGNITER

E 05824 1198558

2/1 99-9-26 R 1 OF 1

DEVELOPMENT HARDWARE

FOR TEST OR EXPERIMENTATION

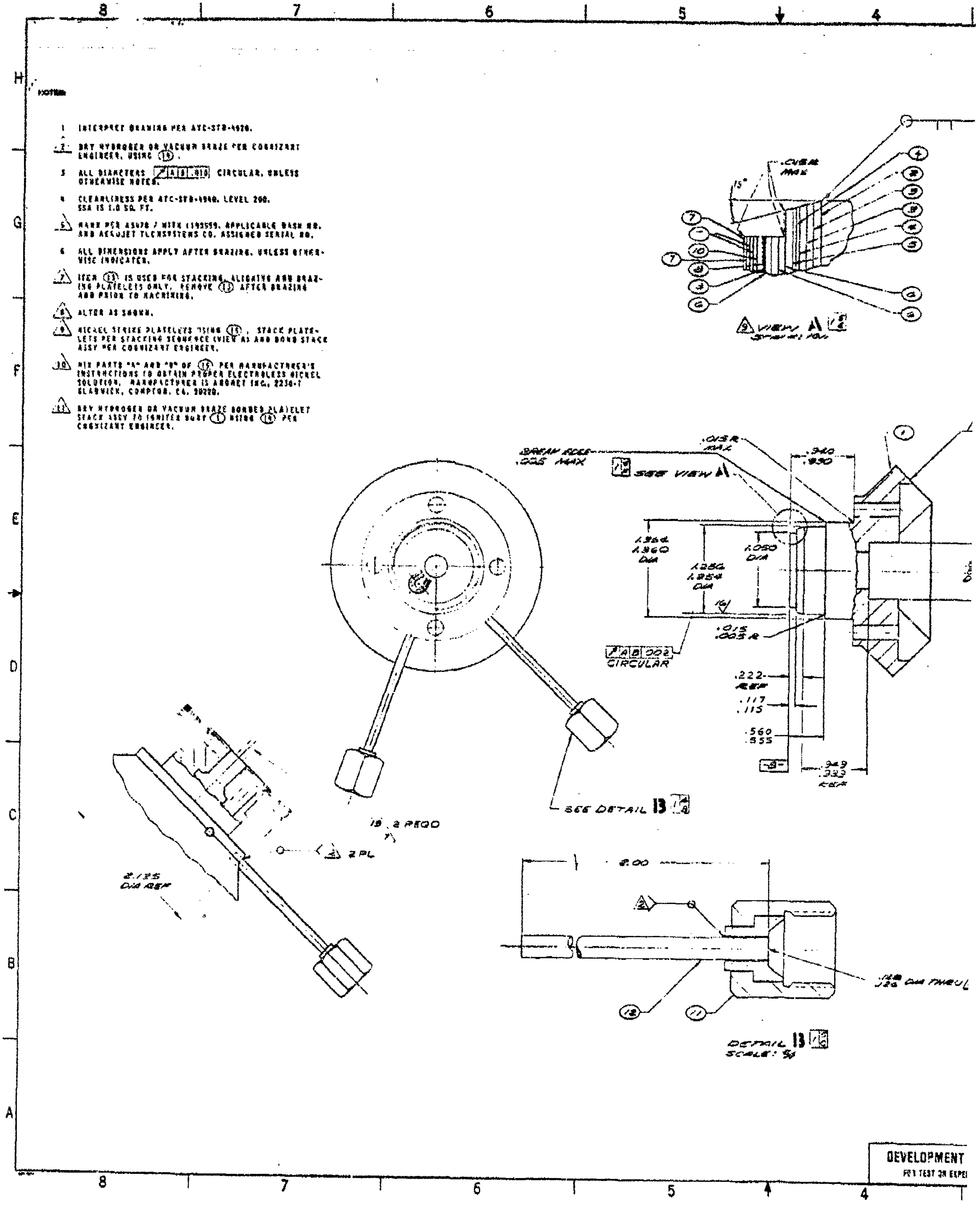

NOTES:

1 INTERPRET DRAWING PER ATC-STD-4970.

2 DRY HYDROGEN OR VACUUM BRAZE PER COGNIZANT ENGINEER, USING ⑭.

3 ALL DIAMETERS [↗|A|B|.010] CIRCULAR, UNLESS OTHERWISE NOTED.

4 CLEANLINESS PER ATC-STD-4940, LEVEL 200. SSA IS 1.0 SQ. FT.

5 MARK PER AS478 / WITH 1193559, APPLICABLE DASH NO. AND AEROJET TECHSYSTEMS CO. ASSIGNED SERIAL NO.

6 ALL DIMENSIONS APPLY AFTER BRAZING, UNLESS OTHERWISE INDICATED.

7 ITEM ⑬ IS USED FOR STACKING, ALIGNING AND BRAZING PLATELETS ONLY. REMOVE ⑬ AFTER BRAZING AND PRIOR TO MACHINING.

8 ALTER AS SHOWN.

9 NICKEL STRIKE PLATELETS USING ⑮. STACK PLATELETS PER STACKING SEQUENCE (VIEW A) AND BOND STACK ASSY PER COGNIZANT ENGINEER.

10 MIX PARTS "A" AND "B" OF ⑮ PER MANUFACTURER'S INSTRUCTIONS TO OBTAIN PROPER ELECTROLESS NICKEL SOLUTION. MANUFACTURER IS ARDROX INC., 2230-T GLADWICK, COMPTON, CA. 90220.

11 DRY HYDROGEN OR VACUUM BRAZE BONDED PLATELET STACK ASSY TO IGNITER BODY ① USING ⑭ PER COGNIZANT ENGINEER.

| REVISIONS | | | |
|---|---|---|---|
| LTR | DESCRIPTION | RELEASE DATE | APPROVED |

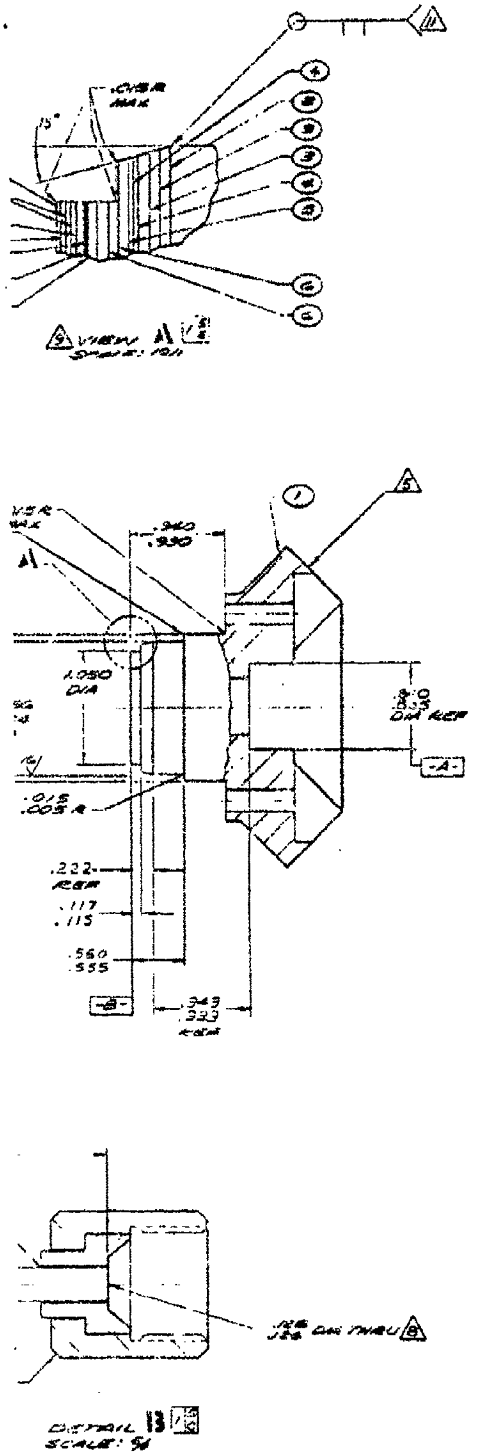

FOR RECORD ONLY. DO NOT FABRICATE TO THIS PRINT.
X RETAIN ORIGINAL VELLUM UNTIL JUNE 1990
__ DESTROY ORIGINAL VELLUM AFTER MICROFILMING
AUTHORIZED CHECKER [illegible] 89-9-25

INSEPARABLE ASSEMBLY DRAWING

| -3 | FSCM NO. | PART OR IDENTIFYING NO. | NOMENCLATURE OR DESCRIPTION | MATERIAL SPECIFICATION | ZONE | ITEM NO. |
|---|---|---|---|---|---|---|
| AR | | | BRAZE ALLOY | [illegible] | | 15 |
| AR | | | BRAZE ALLOY | ELECTROLESS NICKEL FOIL .001 THICK PER AMS 4797 | | 14 |
| 2 | | MS 9390-200 | PIN | | 1 C | 13 |
| 2 | | -11 | TUBE | [illegible] | 1 B | 12 |
| 2 | | -10 | CAP | [illegible] CODE IDENT NO 70720 | 1 B | 11 |
| 1 | | 1198833-8 | PLATELET | | 1 5 | 10 |
| | | | | | | 9 |
| 3 | | 1198833-7 | PLATELET | | 1 5 | 8 |
| 4 | | 1198833-6 | PLATELET BOTTOM | | 1 5 | 7 |
| 3 | | 1198833-5 | PLATELET | 1 5 1 4 | 1 4 | 6 |
| 1 | | 1198833-4 | PLATELET | | 1 4 | 5 |
| 2 | | 1198833-3 | PLATELET | | 1 4 | 4 |
| 2 | | 1198833-2 | PLATELET | | 1 4 | 3 |
| 1 | | 1198833-1 | PLATELET BOTTOM | | 1 4 | 2 |
| 1 | | 1198558-1 | BODY-IGNITER | | 1 4 | 1 |

PARTS LIST

CONTRACT NO. NAS 3-24238
DRAWN PODNCORE 89-9-11
CHECK [illegible]
[illegible] 9-6-89
[illegible] 9-6-89
UNLESS OTHERWISE SPECIFIED
DIMENSIONS & TOLERANCING ARE IN INCHES
TOLERANCES
DECIMALS .XX ±.06 .XXX ±.005
ANGULAR ±2°
SURFACE ROUGHNESS
DO NOT SCALE DRAWING
DWG. LEVEL 2

TechSystems

IGNITER BODY AND PLATELET ASSEMBLY

SIZE E | FSCM NO. 05824 | DWG NO. 1198559
SCALE 2/1 | RELEASE DATE 89-9-26 | SHEET 1 OF 1

DEVELOPMENT HARDWARE
FOR TEST OR EXPERIMENTATION

NOTES:

1 INTERPRET DRAWING PER ATC-STD-4926.

2 MARK PER AS478-7A WITH 119867A AND APPLICABLE DASH NUMBER.

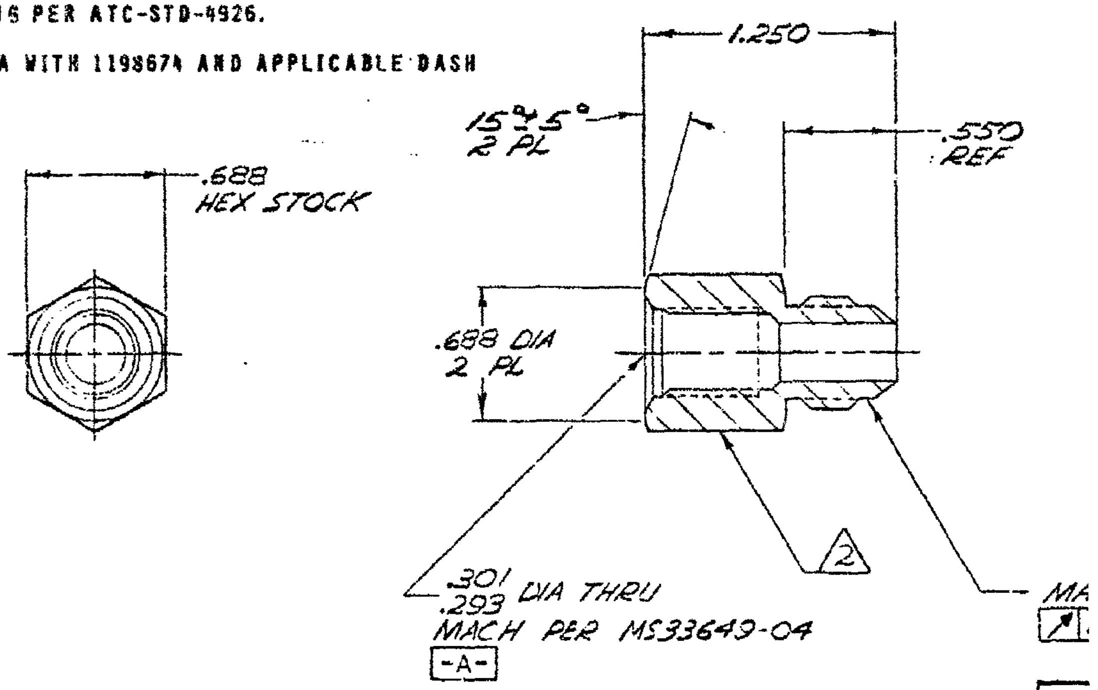

FO

AU

| | | | | |
|---|---|---|---|---|
| | | | -/ | |
| | | FSCM NO | PART OR IDENTIFYING NO. | NOMENC DESC |
| QTY REQ'D PER ASSY | | | | |

CONTRACT NO 1S 3-24398

DRAWN T. HARTNO

CHECK G. Booth

DESIGN P. J. Hobins

DESIGN ACTIVITY P. J. Hobins

UNLESS OTHERWISE SPECIFIED:
DIMENSIONS & TOLERANCING ARE IN INCHES & PER ANSI Y 14.5
TOLERANCES
DECIMALS .XX ± .03 .XXX ± .010
ANGULAR ± 2°
√ SURFACE ROUGHNESS
DO NOT SCALE DRAWING

DWG. LEVEL 2

| | | |
|---|---|---|
| WEIGHTS | | |
| STRESS | | |
| MATERIALS & PROCESSES | | |
| MANUFACTURING ENGRG | | |
| QUALITY ASSURANCE | | |
| ADDITIONAL APPROVALS | | DATE |

**DEVELOPMENT HARDWARE**
FOR TEST OR EXPERIMENTATION

THIS DWG IS
PER POLICY

| REVISIONS | | | | |
|---|---|---|---|---|
| ZONE | LTR | DESCRIPTION | DATE | APPROVED |
| | | | | |

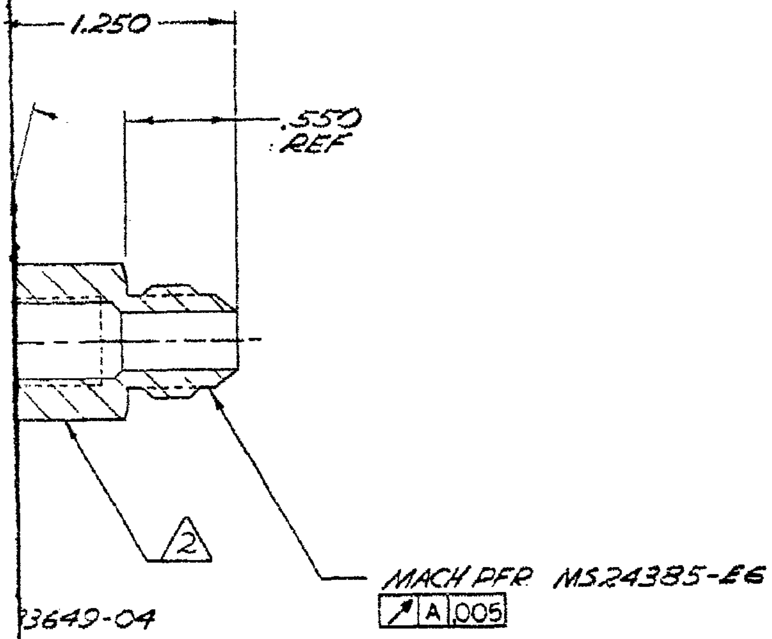

/PFR
005

ECORD
ETAIN OR
ESTROY
ORIZED C

**FOR RECORD ONLY. DO NOT FABRICATE TO THIS PRINT.**

X RETAIN ORIGINAL VELLUM UNTIL July 1990

___ DESTROY ORIGINAL VELLUM AFTER MICROFILMING

AUTHORIZED CHECKER R.L. Wilson 89-5-25

| | | | | | | |
|---|---|---|---|---|---|---|
| | | | -1 | | CRES QQ-S-763 CL 347 | |
| QTY REQ'D PER ASSY | | FSCM NO | PART OR IDENTIFYING NO. | NOMENCLATURE OR DESCRIPTION | MATERIAL SPECIFICATION | ITEM NO |
| PARTS LIST | | | | | | |

URE OR
ION
PART

DATE 85-7-
9-6-89
9-6-89

CONTRACT NO 15 3-24398

UNLESS OTHERWISE SPECIFIED:
DIMENSIONS & TOLERANCING
ARE IN INCHES & PER ANSI Y 14.5
TOLERANCES
DECIMALS ANGULAR
.XX ± .03 ± 2°
.XXX ± .010
√ SURFACE ROUGHNESS
DO NOT SCALE DRAWING

DWG. LEVEL 2

| | |
|---|---|
| DRAWN T. HARTNOLL | DATE 85-7- |
| CHECK | |
| DESIGN R. J. Robinson | 9-6-89 |
| DESIGN ACTIVITY R. J. Robinson | 9-6-89 |

AEROJET
TechSystems
COMPANY
SACRAMENTO, CALIFORNIA

TITLE
**FITTING**

| SIZE | FSCM NO | DWG NO |
|---|---|---|
| C | 05824 | 1198674 |

| SCALE | RELEASE DATE | SHEET |
|---|---|---|
| 2/1 | 89-9-26 | 1 OF 1 |

P.C. 481

1198674

EEN REVIEW
, 12-1-85

2 THIS DWG HAS BEEN REVIEWED PER POLICY 27-1, 12-1-85

NOTES:

1. INTERPRET DRAWING PER ATC-STD-4926.
2. MARK PER AS478-7A WITH 11988/5 AND APPLICABLE DASH NUMBER.

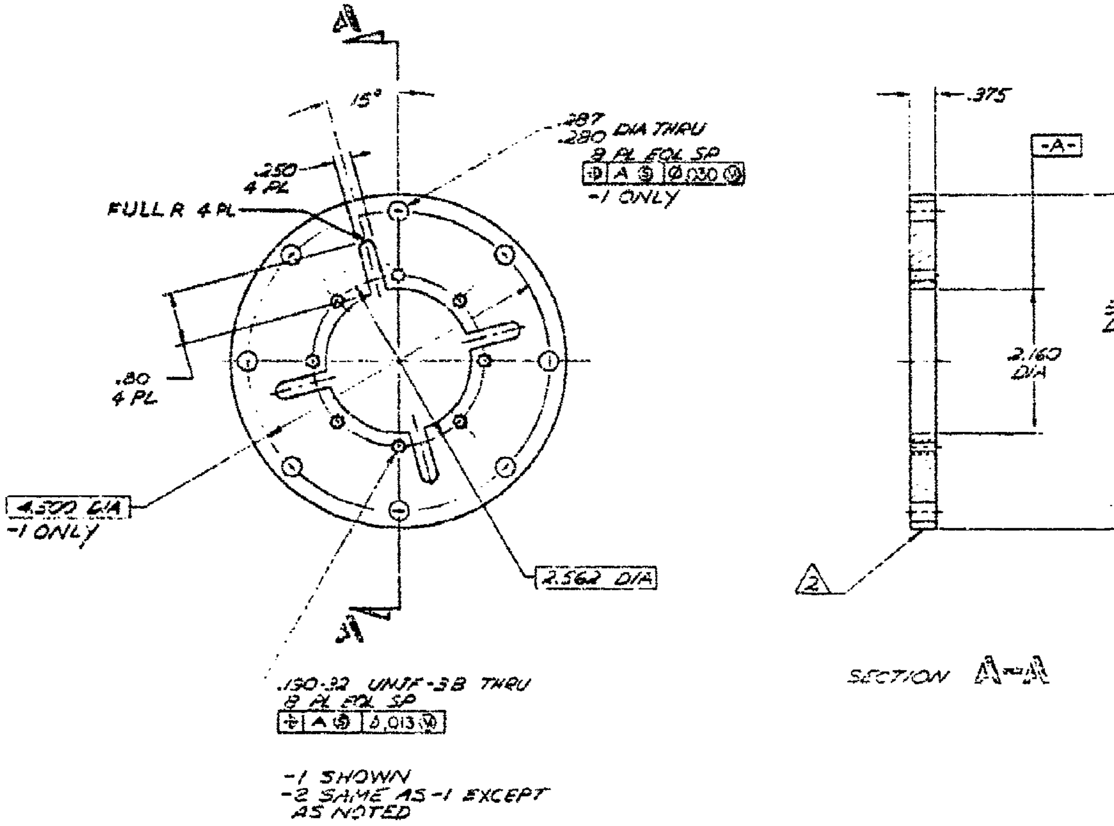

-1 SHOWN
-2 SAME AS -1 EXCEPT AS NOTED

**DEVELOPMENT HARDWARE**
FOR TEST OR EXPERIMENTATION

| REVISIONS | | | |
|---|---|---|---|
| LTR | DESCRIPTION | RELEASE DATE | APPROVED |

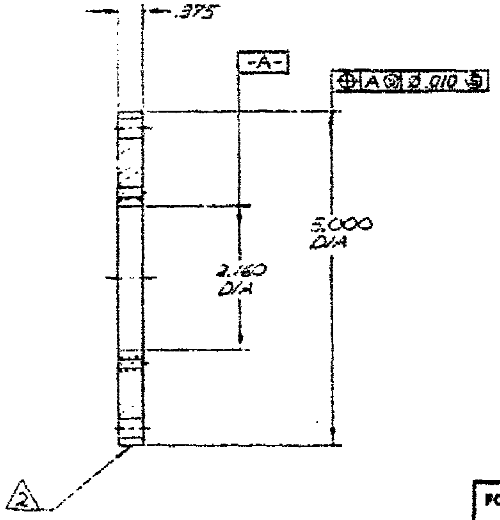

SECTION A-A

FOR RECORD ONLY. DO NOT FABRICATE TO THIS PRINT.
X RETAIN ORIGINAL VELLUM UNTIL July 1990
___ DESTROY ORIGINAL VELLUM AFTER MICROFILMING
AUTHORIZED CHECKER 89-9-25

1198675

| QTY REQ'D PER ASSY | | FIND NO. | PART OR IDENTIFYING NO. | NOMENCLATURE OR DESCRIPTION | MATERIAL SPECIFICATION | ITEM NO. |
|---|---|---|---|---|---|---|
| | | | -2 | | CRES QQ-S-763 CLASS 347 OR AMS 55?? | 2 |
| | | | -1 | | | 1 |

PARTS LIST

CONTRACT NO. VAS 3-24399
DRAWN T. MARTYOLL DATE 25-7-?
UNLESS OTHERWISE SPECIFIED DIMENSIONING & TOLERANCING TO BE INTERPRETED PER ANSI Y14.5
TOLERANCES
DECIMALS .XX ±.03 .XXX ±.010 ANGULAR ±2°
SURFACE ROUGHNESS
DO NOT SCALE DRAWING
DWG. LEVEL 2

AEROJET TechSystems COMPANY

TITLE PLATE , THRUST

SIZE D FSCM NO. 05824 DWG NO. 1198675
SCALE 1/1 RELEASE DATE 89-9-26 SHEET 1 of 1

OPMENT HARDWARE
TEST OR EXPERIMENTATION

NOTES:

1 INTERPRET DRAWING PER ATC-STD-4926.

⚠2 CENTER DRILL PERMISSIBLE. MAXIMUM SIZE PER COGNIZANT ENGINEER.

⚠3 MARK PER AS478-7A WITH 1198692 AND APPLICABLE DASH NUMBER. OBLITERATE ORIGINAL IDENTIFICATION NO. WITHOUT DAMAGE TO THE PART.

⚠4 SGL AUBURN SPARK PLUG CO., 89 YORK STREET, AUBURN, NEW YORK.

⚠5 ALTER AS SHOWN.

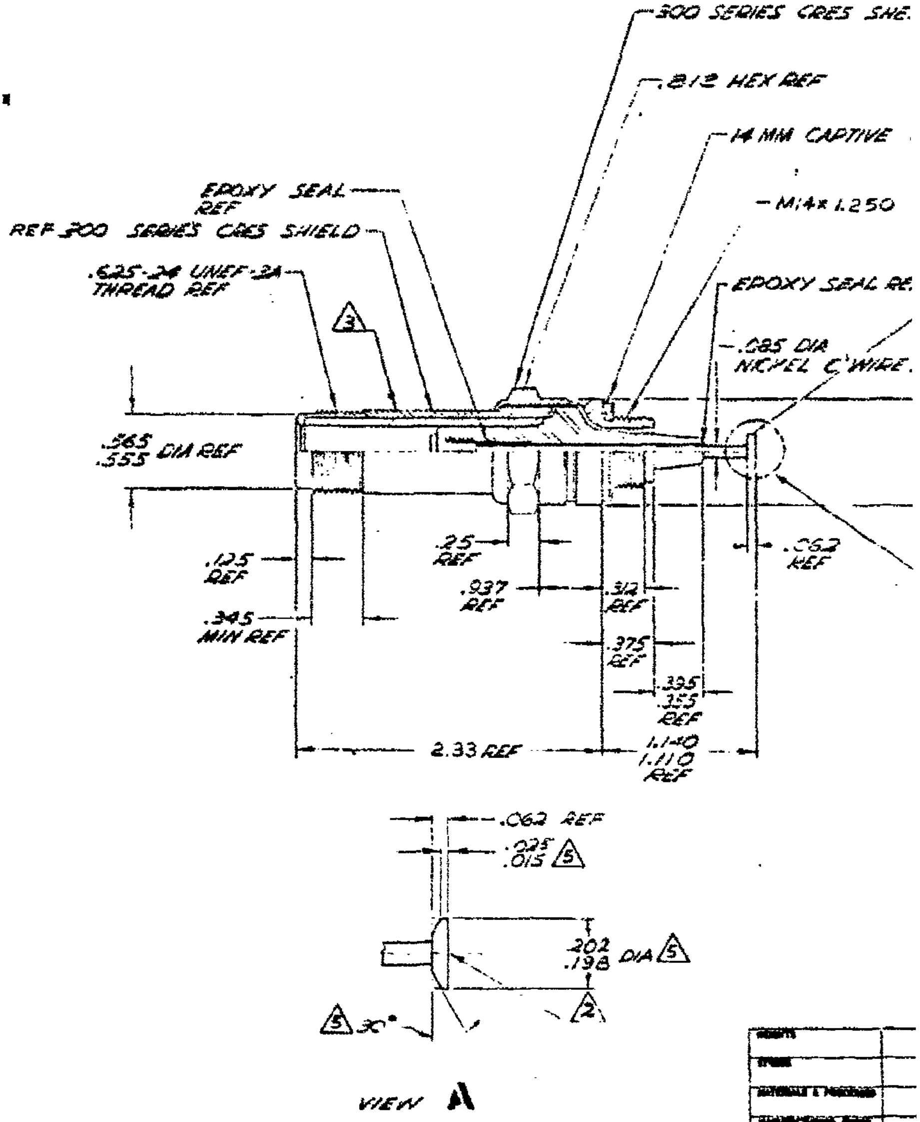

DEVELOPMENT HARDWARE
FOR TEST OR EXPERIMENTATION

| | |
|---|---|
| WEIGHTS | |
| STRESS | |
| MATERIALS & PROCESSES | |
| MANUFACTURING ENGR | |
| QUALITY ASSURANCE | |
| ADDITIONAL APPROVALS | |

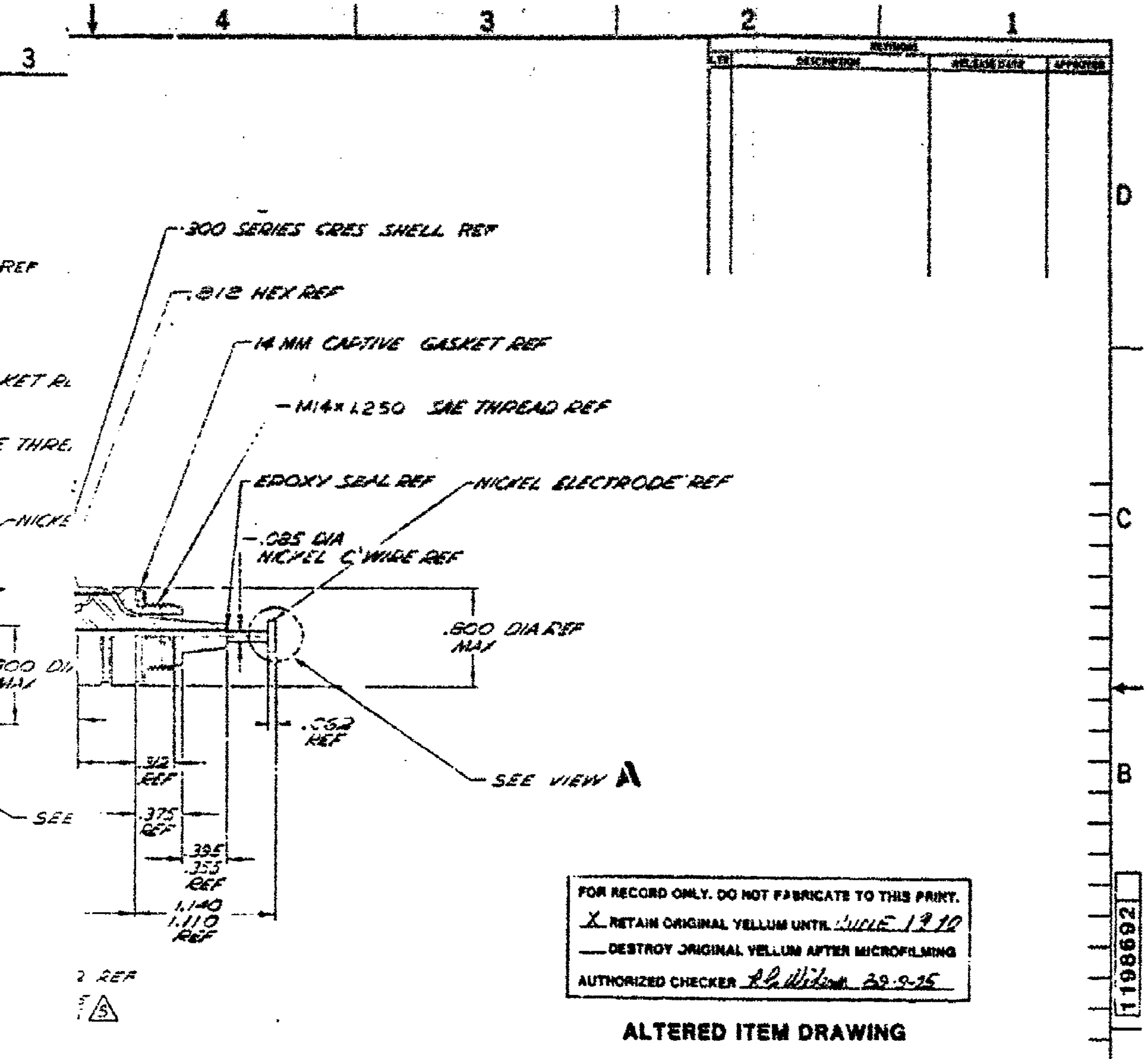

FOR RECORD ONLY. DO NOT FABRICATE TO THIS PRINT.

X RETAIN ORIGINAL VELLUM UNTIL June 1990

___ DESTROY ORIGINAL VELLUM AFTER MICROFILMING

AUTHORIZED CHECKER R L Wilson 89-9-25

## ALTERED ITEM DRAWING

|  |  |  |  |  |  |
|---|---|---|---|---|---|
|  | -1 |  | ALTER FROM CE 343-A ⚠4 |  |  |
| QTY REQD PER ASSY | PART OR IDENTIFYING NO. | NOMENCLATURE OR DESCRIPTION | MATERIAL SPECIFICATION |  | ITEM NO. |

PARTS LIST

CONTRACT NO. NAS-3-24398

DRAWN T. HARTNOLL 85-6-17

ENGR R J Robinson 9-6-89

DESIGN ACTIVITY R J Robinson 9-6-89

UNLESS OTHERWISE SPECIFIED DIMENSIONS ARE IN INCHES & APPLY AFTER FINISH

TOLERANCES
DECIMALS .XX ±.03 .XXX ±.010
ANGULAR ±1°

√ SURFACE ROUGHNESS

DO NOT SCALE DRAWING

DWG LEVEL 2

LEAR SIEGLER TechSystems COMPANY

TITLE SPARK IGNITER

SIZE D CODE IDENT NO. 05824 DWG NO. 1198692

SCALE 2/1 RELEASE DATE 89-9-26 REV B SHEET 1 of 1

ES 481,495

IENT HARDWARE
OR EXPERIMENTATION

A-19

| ZONE | LTR |
|---|---|
| | |

NOTES:

1 INTERPRET DRAWING PER ATC-STD-4926.

2 PHOTO-ETCH FABRICATE USING NEGATIVE NUMBERS INDICATED.

3 MATERIAL SURFACE CONDITION SHALL BE FREE OF CUTS, DENTS AND SCRATCHES.

4 ACCEPTABLE ALTERNATE MATERIAL IS COLD-ROLLED, HALF-HARD COPPER STRIP PER QQ-C-576. TYPE TO BE OXYGEN-FREE, NO RESIDUAL DEOXIDANTS, OR ELECTROLYTIC TOUGH PITCH.

5 MARK PER AS478-37 WITH 1198832 AND APPLICABLE DASH NUMBER.

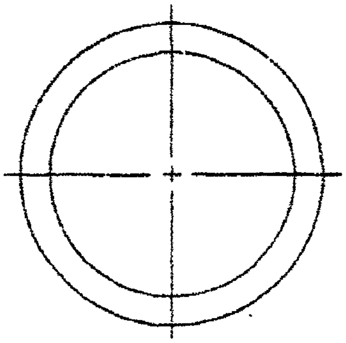

FOR RECORD ONLY. DO NOT FABRICATE TO THIS PRI

X RETAIN ORIGINAL VELLUM UNTIL July 199

___DESTROY ORIGINAL VELLUM AFTER MICROFILMI

AUTHORIZED CHECKER RaWilner 89-9-25

| DASH NO. | T DIM | NEGATIVE NO. |
|---|---|---|
| -1 | .040<br>.030 | 3721 |
| -2 | .060<br>.050 | 3722 |

| | | | | |
|---|---|---|---|---|
| | | | -2 | |
| | | | -/ | |
| | | FSCM NO | PART OR IDENTIFYING NO. | NOMENCLATUR DESCRIPTIO |
| QTY REQ'D PER ASSY | | | | |

CONTRACT NO
NAS 3-24398

UNLESS OTHERWISE SPECIFIED:
DIMENSIONS & TOLERANCING ARE IN INCHES & PER ANSI Y 14.5
TOLERANCES
DECIMALS ANGULAR
.XX ±.03 ±2°
.XXX ±.010
√ SURFACE ROUGHNESS
DO NOT SCALE DRAWING

DWG. LEVEL
2

CRAWN
T. HARTYCLL
CHECK
J Groth
DESIGN
R J Robinson
DESIGN ACTIVITY
R J Robinson

| | |
|---|---|
| WEIGHTS | |
| STRESS | |
| MATERIALS & PROCESSES | |
| MANUFACTURING ENGINEERING | |
| QUALITY ASSURANCE | |
| ADDITIONAL APPROVALS | DATE |

**DEVELOPMENT HARDWARE**
FOR TEST OR EXPERIMENTATION

THIS DR
PER PO

2 1

| REVISIONS | | | | |
|---|---|---|---|---|
| ZONE | LTR | DESCRIPTION | DATE | APPROVED |
| | | | | |

D

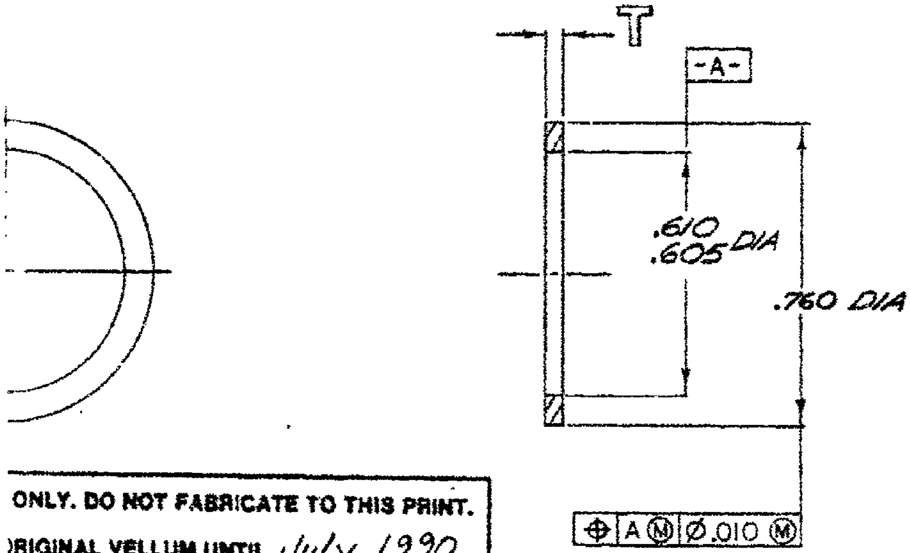

C

1198832

ONLY. DO NOT FABRICATE TO THIS PRINT.
)RIGINAL VELLUM UNTIL July 1990
' ORIGINAL VELLUM AFTER MICROFILMING
CHECKER 89-9-25

NT.
2
IG

B

| REQ'D ASSY | FSCM NO | PART OR IDENTIFYING NO. | NOMENCLATURE OR DESCRIPTION | MATERIAL SPECIFICATION | ITEM NO |
|---|---|---|---|---|---|
| | | -2 | | COPPER PER ASTM-B152 UNS NO C10100, C10200 OR C11000 TEMPER H02 △3 △4 | 2 |
| | | -1 | | | 1 |

PARTS LIST

RACT NO 53-24398
DATE 85-7-
LESS OTHERWISE SPECIFIED:
DIMENSIONS & TOLERANCING
E IN INCHES & PER ANSI Y 14.5
TOLERANCES
DECIMALS ANGULAR
XX ±.03 ±2°
XXX ±.010
√ SURFACE ROUGHNESS
NOT SCALE DRAWING
DWG. LEVEL 2

9-6-8
7-6-8

CRAWN T. HARTNOLL DATE 85-7-25
CHECK
DESIGN P J Robinson 9-6-89
DESIGN ACTIVITY P J Robinson 9-6-89

AEROJET TechSystems COMPANY

TITLE
**GASKET,SPARK IGNITER**

SIZE C
FSCM NO 05824
DWG NO 1198832

SCALE 4/1
RELEASE DATE 89-9-26
SHEET 1 OF 1

A

2 THIS DWG HAS BEEN REVIEWED PER POLICY 37-1, 10-1-85 1 P.C. 481

# APPENDIX B

# TEST DATA
# FOR
# THRUSTER NO. 1

## SPACE STATION THRUSTER TEST SUMMARY

| Mixture Ratio O/F | Total Duration (sec) | Total Impulse (lbF-sec) |
|---|---|---|
| 2 | 60 | 1,302 |
| 3 | 240 | 5,107 |
| 4 | 3,735 | 89,526 |
| 5 | 224 | 5,576 |
| 6 | 221 | 4,728 |
| 7 | 17,563 | 428,997 |
| 8 | 155 | 3,221 |
| Total: | 22,198 | 538,457 |

## SPACE STATION THRUSTER TEST SUMMARY

| Fuel Film Cooling (%) | Mixture Ratio O/F | Total Duration (sec) | Total Impulse (lbF-sec) |
|---|---|---|---|
| 59 | 3 | 60 | 1,662 |
| | 4 | 980 | 26,221 |
| | 5 | 55 | 1,386 |
| | 6 | 19 | 456 |
| 64 | 3 | 60 | 1,602 |
| | 4 | 687 | 16,458 |
| | 5 | 72 | 1,749 |
| 74 | 4 | 1,547 | 35,949 |
| | 5 | 97 | 2,441 |
| 85 | 4 | 271 | 6,314 |
| | 7 | 17,219 | 420,063 |
| | 8 | 51 | 1,056 |
| 87 | 2 | 60 | 1,302 |
| | 4 | 120 | 2,184 |
| | 6 | 120 | 2,376 |
| | 8 | 66 | 1,332 |
| 88 | 6 | 60 | 1,314 |
| | 8 | 38 | 833 |
| 92 | 3 | 120 | 1,843 |
| | 4 | 130 | 2,400 |
| | 6 | 22 | 582 |
| 95 | 7 | 344 | 8,934 |
| | Total: | 22,198 | 538,457 |

# SPACE STATION AUXILIARY THRUST CHAMBER TECHNOLOGY

CONTRACT NAS 3-24398

## TEST DATA SUMMARY FOR THRUSTER S/N 001

---

TEST CONFIGURATION CONSISTS OF INJECTOR S/N 002, ORIGINAL SLEEVE DESIGN, 87% FFC AND AMBIENT GH2 INLET TEMPERATURE

| Test No. | O/F | F (lbF) | Pc (Psia) | $ISP_v/ISP_n$ (lbF-sec/lbm) | T bulk (°F) | Tbs,max (°F) | QF/CP | Duration (sec) | Comments |
|---|---|---|---|---|---|---|---|---|---|
| 1 | 4.0 | | | | | | | | Fuel valve cold flow Test No. 1 |
| 2 | 4.0 | | | | | | | | Oxidizer valve cold flow Test No. 1 |
| 3 | 4.0 | | | | | | | | Oxidizer valve cold flow Test No. 2 |
| 4 | 4.0 | | | | | | | | Fuel valve cold flow Test No. 2 |
| 5 | 4.0 | | | | | | | | Simultaneous Fuel & Oxid valve cold flow |
| 101 | 4.0 | | | | | | | | Simultaneous Fuel & Oxid valve cold flow |
| 104 | 4.0 | | | | | | | 5 | Ignition checkout |
| 105 | 3.77 | | | | | | | 5 | Ignition checkout |
| 106 | | | | | | | | 20 | Ignition checkout |
| 107 | | | | | | | | 60 | No data recorded during test |
| 108 | 4.09 | 18.6 | 52.8 | 333 | 328 | 395 | 3.28 | 60 | Data recorded, same conditio[illegible] as No. 107 |
| [illegible] | 5.07 | 20.1 | 54.2 | 307 | 485 | 563 | 4.34 | 60 | Ignition |

TEST CONFIGURATION CONSISTS OF INJECTOR S/N 002, ORIGINAL SLEEVE DESIGN, 87% FFC AND AMBIENT GH2 INLET TEMPERATURE

| Test No. | O/F | F (lbF) | Pc (Psia) | $ISP_v/ISP_n$ (lbF-sec/lbm) | T bulk ($^0F$) | Tbs,max ($^0F$) | QF/CP | Duration (sec) | Comments |
|---|---|---|---|---|---|---|---|---|---|
| 113 | 7.71 | 20.6 | 55.6 | 302 | 502 | 801 | 3.72 | 20 | |
| GH2 Inlet Temp. Change from Ambient to Sub-Cooled (-80$^0$ F) | | | | | | | | | |
| 114 | 4.18 | 17.8 | 50.9 | 329 | 212 | 283 | 3.26 | 60 | |
| 115 | 6.03 | 19.5 | 52.7 | 302 | 334 | 406 | 4.03 | 60 | |
| 116 | 7.76 | 20.0 | 52.4 | 306 | 546 | 812 | 4.93 | 46 | TFJ kill @ 550$^0$F |
| 119 | 2.18 | 21.7 | 59.9 | 373 | 87.1 | 124 | 2.87 | 60 | |
| Injector S/N Change from 002 to 001<br>GH2 Inlet Temp. Change from Sub-Cooled to Ambient; % FFC Change from 87% to 92% | | | | | | | | | |
| 123 | 4.04 | 17.4 | 47.8 | 326 | 212 | | 1.80 | 10 | Good test |
| 124 | 3.96 | 25.8 | 69.6 | 340 | 346 | 376 | 4.51 | 60 | 517 OX; 303 Fuel<br>Good test |
| 125 | 4.17 | 11.3 | 32.9 | 341 | 388 | 464 | 2.25 | 60 | 237 OX; 303 Fuel<br>Low Pc @ 33 Psia |

TEST CONFIGURATION CONSISTS OF INJECTOR S/N 001, ORIGINAL SLEEVE DESIGN, 92% FFC AND AMBIENT GH2 INLET TEMPERATURE

| Test No. | O/F | F (lbF) | Pc (Psia) | $ISP_v/ISP_n$ (lbF-sec/lbm) | T bulk (°F) | Tbs,max (°F) | QF/CP | Duration (Sec) | Comments |
|---|---|---|---|---|---|---|---|---|---|
| 126 | 3.43 | 6.21 | 18.5 | 371 | 328 | 396 | 1.15 | 60 | Low Pc @ 18.5 |
| 128 | 6.19 | 26.2 | 70.9 | 345 | 543 | 783 | 5.24 | 22.2 | Temp. kill @ 550°F |
| 129 | 3.21 | 24.5 | 66.1 | 350 | 292 | 347 | 3.95 | 60 | OK |
| % FFC Change from 92% to 63.9% | | | | | | | | | |
| 134 | 4.14 | 32.4 | 85.2 | 404 | 498 | 549 | 7.13 | 60 | High Pc, High F |
| 140 | 3.96 | 25.9 | 68.5 | 410/410 | 504 | 561 | 6.07 | 60 | |
| 142 | 2.95 | 26.7 | 70.7 | 430/430 | 366 | 415 | 5.20 | 60 | |
| 146 | 4.69 | 24.1 | 63.6 | 393 | 545 | 609 | 5.62 | 25.6 | TFJ kill @ 550°F<br>Kill should have been 600°<br>for this test |
| 147 | 4.74 | 24.4 | 64.3 | 392 | 596 | 659 | 6.22 | 46.4 | TFJ kill @ 600°F |
| % FFC Change from 63.9% to 59.2% | | | | | | | | | |
| 153 | 3.93 | 26.6 | 69.8 | 421/421 | 504 | 607 | 6.10 | 60 | Good test |
| 154 | 3.03 | 27.7 | 73.1 | 438/439 | 388 | 470 | 5.57 | 60 | Good test |

TEST CONFIGURATION CONSISTS OF INJECTOR S/N 001, ORIGINAL SLEEVE DESIGN, 59.2% FFC AND AMBIENT GH2 INLET TEMPERATURE

| Test No. | O/F | F (lbF) | Pc (Psia) | $ISP_v/ISP_n$ (lbF-sec/lbm) | T bulk (°F) | Tbs,max (°F) | QF/CP | Duration (sec) | Comments |
|---|---|---|---|---|---|---|---|---|---|
| 156 | 5.67 | 23.6 | 62.0 | 387 | 591 | 752 | 5.24 | 19.315 | TFJ kill @ 600°F |
| 164 | 5.03 | 25.2 | 65.8 | 399 | 596 | 771 | 6.07 | 55 | TFJ kill @ 600°F |
| 166 | 4.12 | 26.6 | 70.4 | 413 | 495 | 640 | 5.96 | 120 | Good test |
| 167 | 4.14 | 27.1 | 70.7 | 418/418 | 498 | 637 | 5.99 | 300 | Good test - steady state (i.e. thermal equilibri |
| 171 | 4.03 | 26.6 | 68.6 | 423/423 | 507 | 644 | 5.84 | 500.115 | Manual kill to check facility temp. |

% FFC change from 59.2% to 74%.
GH2 Inlet Temp. change from Ambient to -80°F.

| | | | | | | | | | |
|---|---|---|---|---|---|---|---|---|---|
| 172 | 4.13 | 21.6 | 57.8 | 381/380 | 485 | 559 | 4.67 | 60 | Low F (21.6) and PC *Hot test full duration* |
| 173 | 3.98 | 26.1 | 69.6 | 384/384 | 451 | 518 | 5.29 | 60 | Good test |
| 174 | 4.95 | 25.0 | 66.2 | 364/363 | 546 | 614 | 5.66 | 36.9 | TFJ kill @ 550°F |
| 175 | 4.99 | 25.3 | 66.6 | 365/365 | 590 | 663 | 6.19 | 60 | Good test; full duration |

## TEST CONFIGURATION CONSISTS OF INJECTOR S/N 001, ORIGINAL SLEEVE DESIGN, 74% FFC AND AMBIENT GH2 INLET TEMPERATURE

| Test No. | O/F | F (lbF) | Pc (Psia) | $ISP_v/ISP_n$ (lbF-sec/lbm) | T bulk (°F) | Tbs,max (°F) | QF/CP | Duration (sec) | Comments |
|---|---|---|---|---|---|---|---|---|---|
| 176 | 4.05 | 26.4 | 70.8 | 385/385 | 464 | 528 | | 328 | Facility kill @ 328 sec; One booster pump blower shut down |
| 182 | 4.11 | 27.0 | 71.2 | 386/386 | 479 | 532 | 5.58 | 437 | Facility kill @ 437 sec due to high cell pressur |
| 183 | 4.01 | 21.9 | 58.9 | 385/385 | 507 | 562 | 5.00 | 217 | 21.9 lbf test - facility kill @ 217 sec due to high cell pressure |
| 184 | 4.03 | 17.7 | 47.5 | 392/392 | 544 | 610 | 4.48 | 445 | Facility kill due to high cell pressure |
| Sleeve changed from original design to modified design. % FFC changed from 74% to 88%. | | | | | | | | | |
| 186 | 6.00 | 21.9 | 60.1 | 332/332 | 579 | 749 | 5.18 | 60 | |
| 187 | 7.63 | 22.0 | 60.2 | 341/341 | 583 | 949 | 4.31 | 20 | |
| GH2 Inlet Temp. change from Ambient to -100°F | | | | | | | | | |
| 189 | 8.12 | 21.8 | 60.0 | 309/312 | 490 | 862 | 4.56 | 18 | TC3 kill due to high temp |
| % FFC change from 88% to 85%. | | | | | | | | | |
| 191 | 8.09 | 20.7 | 54.3 | 291/295 | 575 | 780 | 5.33 | 51 | TC3 kill @ 900°F |

## TEST CONFIGURATION CONSISTS OF INJECTOR S/N 001, MODIFIED SLEEVE DESIGN, 85% FFC AND 100$^0$F GH2 INLET TEMPERATURE

| Test No. | O/F | F (lbF) | Pc (Psia) | $ISP_v/ISP_n$ (lbF-Sec/lbm) | T bulk ($^0$F) | Tbs,max ($^0$F) | QF/CP | Duration (sec) | Comments |
|---|---|---|---|---|---|---|---|---|---|
| 192 | 7.08 | 20.8 | 54.4 | 302/306 | 561 | 656 | | 60 | Good run |
| 193 | 7.17 | 21.4 | 54.4 | 307/310 | 556 | 628 | | 600 | Good run - TFJ=550$^0$F<br>TC4=750$^0$F - Pduct=.32 ps |
| 199 | 7.34 | 25.7 | 65.5 | 308/311 | 550 | 643 | | 600 | Good run - TFJ=540$^0$F<br>TC4=750$^0$F - Pduct=.36 ps |
| GH2 Inlet Temp. change from -100$^0$F to -90$^0$F | | | | | | | | | |
| 202 | 3.71 | 23.3 | 62.7 | 335/338 | 146 | 195 | 3.53 | 271 | Kill due to high Pduct<br>@ 0.66 psia |
| % FFC Change from 85% to 95% and GH2 Inlet Temp. change from -90$^0$F to -100$^0$F | | | | | | | | | |
| 208 | 7.11 | 27.5 | 74.0 | 326/329 | 574 | 950 | 7.06 | 275 | TC4 Temp kill @ 900$^0$F |
| 209 | 6.85 | 18.9 | 50.5 | 316/319 | 508 | 888 | | 30 | TC3A Temp kill @ 900$^0$F |
| GH2 Inlet Temp. change from -100$^0$F to -85$^0$F | | | | | | | | | |
| 214 | 6.99 | 20.6 | 55.8 | 312/315 | 479 | 824 | | 39 | TC3A Temp kill @ 900$^0$F |

TEST CONFIGURATION CONSISTS OF INJECTOR S/N 001, ORIGINAL SLEEVE DESIGN, 85% FFC and -90$^0$ F GH2 INLET TEMPERATURE

| Test No. | O/F | F (lbF) | Pc (Psia) | $ISP_v/ISP_n$ (lbF-sec/lbm) | T bulk ($^o$F) | Tbs,max ($^o$F) | QF/CP | Duration (sec) | Comments |
|---|---|---|---|---|---|---|---|---|---|
| 215 | 6.78 | 21.1 | 55.5 | 294/297 | 454 | 843 | 5.19 | 16.8 | TC3A kill @ ›900$^0$ F |
| 216 | 6.61 | 21.4 | 55.9 | 294/297 | 473 | 840 | 5.66 | 14.7 | TC3A kill @ ›900$^0$ F |
| Sleeve design change from Original to Modified. GH2 Inlet Temp. change from -90$^0$ F to -80$^0$ F | | | | | | | | | |
| 219 | 7.27 | 21.3 | 56.5 | 311/314 | 523 | 723 | 5.38 | 60 | Good test |
| 222 | 7.26 | 22.9 | 58.8 | 322/326 | 560 | 669 | 5.87 | 600 | Good test |
| 224 | 7.29 | 24.4 | 61.9 | 327/331 | 563 | 707 | 6.20 | 900 | Good test; Inspected sleeve & polished I.D. |
| 231 | 7.38 | 24.3 | 61.6 | 327/330 | 552 | 701 | 6.03 | 900 | Good test |
| 232 | 7.48 | 23.6 | 62.0 | 318/321 | 597 | 810 | 6.33 | 54 | TFJ @ 600$^0$ F |
| 235 | 7.36 | 24.1 | 61.4 | 325/328 | 556 | 720 | 6.04 | 900 | Good test; removed sleeve. Slight discoloration inside. Cleaned & reinstalled. |
| 236 | 7.26 | 24.7 | 61.6 | 329/332 | 550 | 649 | 6.13 | 1200 | Good test; Sleeve slightly rough at previous discoloration. Polished, cleaned & reinstalled. |

TEST CONFIGURATION CONSISTS OF INJECTOR S/N 001, MODIFIED SLEEVE DESIGN, 85% FFC AND -80$^{0}$ F GH2 INLET TEMPERATURE

| Test No. | O/F | F (lbF) | Pc (Psia) | $ISP_v/ISP_n$ (lbF-sec/lbm) | T bulk ($^{0}$F) | Tbs,max ($^{0}$F) | QF/CP | Duration (sec) | Comments |
|---|---|---|---|---|---|---|---|---|---|
| 239 | 7.36 | 24.8 | 61.9 | 331/335 | 535 | 690 | 5.93 | 1200 | Good test; sleeve appears smooth. Polished, cleaned & reinstalled |
| 240 | 7.25 | 22.9 | 60.8 | 322/325 | 491 | 601 | 5.61 | 250 | Manual kill due to rising P-cell = .14 |
| 244 | 7.42 | 23.9 | 59.9 | 332 | 509 | 612 | 5.74 | 572 | Manual kill due to rising P-cell |
| 245 | 7.24 | 24.4 | 60.5 | 315/318 | 516 | 614 | 5.71 | 1624 | Kill due to high cell pressure |
| 251 | 7.20 | 23.3 | 62.1 | 309/312 | 510 | 606 | 5.81 | 415 | Kill due to high cell pressure |
| GH2 Inlet Temperature change from -80$^{0}$ F to -100$^{0}$ F | | | | | | | | | |
| 260 | 7.14 | 23.2 | 62.4 | 310/313 | 510 | 603 | 5.84 | 364 | Good test; Pduct = 0.5 |
| 269 | 7.15 | 20.4 | 52.4 | 315/318 | 576 | 688 | 5.31 | 664 | Good test. Kill due to high cell pressure. Pduct=0.5 |
| Sleeve design change from Modified to Original. % FFC change from 85% to 64% | | | | | | | | | |
| 273 | 4.09 | 23.4 | 66.0 | 388/391 | 365 | 438 | 5.60 | 183 | Good run; kill due to high cell pressure. Pduct=0.5 |

TEST CONFIGURATION CONSISTS OF INJECTOR S/N 001, ORIGINAL SLEEVE DESIGN, 64% FFC and -100$^{\circ}$ F GH2 INLET TEMPERATURE

| Test No. | O/F | F (lbF) | Pc (Psia) | $ISP_v/ISP_n$ (lbF-sec/lbm) | T bulk ($^{o}$F) | Tbs,max ($^{o}$F) | QF/CP | Duration (sec) | Comments |
|---|---|---|---|---|---|---|---|---|---|
| 274 | 4.04 | 8.16 | 27.7 | 132/135 | 61.9 | 31.0 | 1.21 | 19 | |
| 277 | 4.09 | 23.4 | 65.9 | 388/391 | 360 | 429 | 5.57 | 182 | Good run; Pduct = 0.5 |
| 279 | 4.14 | 23.3 | 65.8 | 386/389 | 364 | 430 | 5.61 | 183 | Good run; Pduct = 0.5 |
| Sleeve design change from Original to Modified. % FFC change from 64% to 85%, from -100$^{0}$F to -85$^{0}$F GH2 Inlet Temperature change | | | | | | | | | |
| 285 | 7.32 | 25.5 | 66.5 | 331/335 | 565 | 627 | 6.35 | 1206 | Good test |
| GH2 Inlet Temperature change from -85$^{0}$ F to -80$^{0}$ F | | | | | | | | | |
| 304 | 7.31 | 25.4 | 66.1 | 330/333 | 566 | 632 | 6.40 | 1501 | Good test |
| 307 | 7.18 | 24.9 | 65.4 | 328/332 | 556 | 618 | 6.31 | 1317 | Good test |
| 311 | 7.47 | 25.6 | 66.3 | 327/331 | 568 | 637 | 6.39 | 2200 | Good test |

SPACE STATION AUXILIARY THRUST CHAMBER TECHNOLOGY

CONTRACT NAS 3-24398

SUMMARY OF TEST CONDITIONS FOR THRUSTER S/N 001

| Sleeve Design | FFC | GH2 Inlet Temp. | F/Pc (lbF/psia) | O/F | Isp (lbF-sec / lbm) | $T_{bulk}$ (°F) | $T_{B.S.}$ (°F) | Comments |
|---|---|---|---|---|---|---|---|---|
| Original | 87% | Ambient | 20/54 | 4,6,8 | 302-333 | 328-502 | 395-801 | 3 Tests, 60 sec. each |
| Original | 87% | Sub-Cooled | 18-22/51-60 | 2,4,6,8 | 302-373 | 87-546 | 124-812 | 4 Tests, 60 sec. each |
| Original | 92% | Ambient | 6-26/18-71 | 3,4,6 | 340-371 | 292-543 | 347-783 | 5 Tests, 60 sec. each |
| Original | 64% | Ambient | 24-32/64-85 | 3,4,5 | 392-430 | 366-596 | 415-659 | 5 Tests, 60 sec. each |
| Original | 59% | Ambient | 24-28/62-73 | 3,4,5,6 | 387-438 | 388-596 | 470-771 | 7 Tests, 20 sec. to 500 sec. |
| Original | 74% | Ambient | 18-27/48-71 | 4,5 | 364-392 | 451-590 | 518-663 | 8 Tests, 40 sec. to 445 sec. |
| Modified | 88% | Ambient | 22/60 | 6,8 | 332-341 | 579-583 | 749-949 | 2 Tests, 60 sec. and 20 sec. |
| Modified | 88% | Sub-Cooled | 22/60 | 8 | 309 | 490 | 862 | 1 Test, 18 sec. |
| * Modified | 85% | Sub-Cooled | 21-26/54-66 | 4,7,8 | 291-335 | 146-575 | 195-780 | 5 Tests, 60 sec., 270 sec. and 600 sec. |
| *‡ Modified | 95% | Sub-Cooled | 19-28/50-74 | 7 | 312-326 | 479-574 | 824-950 | 3 Tests, 30 sec. to 275 sec. |
| Original | 85% | Sub-Cooled | 21/55 | 7 | 292-299 | 458-478 | 848 | 2 Tests, 15 sec. each |

AEROJET TechSystems COMPANY

| Sleeve Design | FFC | GH2 Inlet Temp. | F/Pc (lbF/psia) | O/F | Isp $\left(\frac{\text{lbF-sec}}{\text{lbm}}\right)$ | $T_{bulk}$ ($^oF$) | $T_{B.S.}$ ($^oF$) | Comments |
|---|---|---|---|---|---|---|---|---|
| Modified | 85% | Sub-Cooled | 22-25/58-63 | 7 | 320-337 | 500-550 | 650-720 | 14 Tests, 9700 sec. |
| Original | 64% | Sub-Cooled | 23-24/66-67 | 4 | 380-397 | 360-364 | 437 | 4 Tests, 182 sec. each |
| Modified | 85% | Sub-Cooled | 25-26/65-67 | 7 | 329-340 | 552-573 | ~675 | 4 Tests, 1206 sec., 1500 sec., 1317 sec. and 2200 sec.<br>Total: 6223 sec. |

* Cell pressure instrumentation was reading incorrectly, i.e. bad calibration; therefore, Isp values can be as much as 20 lbF-sec/lbm higher than shown. Exact correction is being determined.

‡ Entries below the indicated run are based on "quick-look" data during testing; post test data reduction is still in progress.

# APPENDIX C

# OUTLINE OF PERFORMANCE PREDICTION METHODOLOGIES

## Simplified Procedure

$$I_{SP_{Delivered}} = I_{SP_{ODE}} \times \eta_{KIN} \; \eta_{DIV} \times \eta_{ERE} - \frac{\Delta FBL}{\dot{M}}$$

$$\eta_{KINETIC} = I_{SP_{ODK}} / I_{SP_{ODE}}$$

$$\eta_{DIV} = I_{SP_{TDE}} / I_{SP_{ODE}}$$

$\eta_{ERE}$ = Vaporization/Mixing Analysis; Test Data

$\Delta FBL$ = Turbulent Boundary Layer Code

## Rigorous Procedure

$$I_{SP_{Delivered}} = \frac{1}{M_T} \sum_{i=1}^{N} \dot{M}_i \quad I_{SP_{TDK}} - \frac{FBL}{\dot{M}}$$

$\dot{M}$ = Mass in Each Stream Tube From SDER/CICM

$I_{SP_{TDK}}$ = Two Dimension Kinetic ISP in Each Stream Tube

$\Delta FBL$ = Thrust Decrements in Boundary Layer From Blimp Code (or BLM Option of TDK)

Figure C-1. Aerojet Has Used Both Simplified and Rigorous JANNAF Performance Procedure in Past to Predict Performance

M7/D28/SS-2

# APPENDIX D

## DETAILED DRAWINGS
## SPACE STATION THRUSTER NO. 2

| Drawing No. | Title |
|---|---|
| 1201414 | Chamber Assembly |
| 1201415 | Thrust Chamber Assembly |
| 1201417 | Body Igniter |
| 1201418 | Integral Igniter Injector Assembly |
| 1201419 | Igniter Sleeve Assembly |
| 1201420 | Washer, Flow Balancing |
| 1201422 | Igniter, Spark |
| 1201423 | Valve, Propellant |
| 1201424 | Thrust Plate |

NOTES

1 INTERFACE DRAWING PER ATC-STD-4025.

2 ALL DIAMETERS ON A COMMON AXIS [illegible] -C- [illegible] 0.010 [illegible] UNLESS OTHERWISE NOTED.

3 CONTAMINATION CRITICAL HARDWARE. CLEANLINESS PER ATC-STD-4540, LEVEL 2000 INTERNAL SURFACES, AND LEVEL VC EXTERNAL SURFACES. SSA IS 1.0 SQ. FT.

4△ BLEND AS NECESSARY TO PRODUCE A SMOOTH AND CONTINUOUS CONTOUR BETWEEN ESTABLISHED POINTS.

5△ ELECTRON BEAM WELD PER ATC-STD-4897-1.

6△ FUSION WELD PER ATC-48551, USING ㉑.

7△ USE ㉔ AS FILLER MATERIAL BETWEEN ① AND ② PRIOR TO ELECTRON BEAM WELDING PER NOTE 5.

8 PENETRANT INSPECT MACHINED SURFACES PER ATC-STD-4942, TYPE I, METHOD A, EXCEPT ETCHING NOT REQUIRED. ACCEPTANCE CRITERIA PER ATC-STD-4008, CLASS I, UNLESS OTHERWISE NOTED.

9△ INDICATED DIMENSIONS ARE NON-MANDATORY (MFG DATA ONLY).

10△ MATCH MACHINE INDICATED DIAMETER TO MATING DIAMETER TO PROVIDE A .010 TO .022 INCH DIAMETRICAL CLEARANCE FIT.

11△ MATCH MACHINE INDICATED DIAMETER TO MATING DIAMETER TO WITHIN .005 TO .010 INCH DIAMETRICAL CLEARANCE FIT.

12△ MATCH MACHINE INDICATED DIAMETER OF ② AND INDICATED DIAMETER OF ③ TO WITHIN .010 INCH.

13 PROTECTIVE CLOSURES REQUIRED AT ALL PORTS TO PROTECT INTERNAL PASSAGES DURING HANDLING, SHIPPING AND STORAGE. REMOVE ONLY AS NECESSARY.

14△ THIS SURFACE TO BE FREE OF STEPS, CHATTER MARKS AND FLATS. NO AXIAL OR SPIRAL SCRATCHES, SCORES, DENTS, ETC. ARE PERMITTED EXCEEDING 40 MICROINCHES DEPTH ANY WIDTH.

15△ DRY HYDROGEN OR VACUUM BRAZE PER COGNIZANT ENGINEER, USING ㉓.

16△ PRIOR TO BRAZING, ALTER THERMOCOUPLE ⑩ AND INSTALL PER COGNIZANT ENGINEER.

17△ CHAMBER WALL THICKNESS SHALL BE MEASURED NORMAL TO THE INNER WALL SURFACE. CHANNEL DEPTH NORMAL TO THE CHANNEL BOTTOM SURFACE AND ELECTROFORMED NICKEL THICKNESS NORMAL TO THE OUTER SURFACE OF THE CHAMBER LINER ①.

18△ ELECTROFORM NICKEL PER COGNIZANT ENGINEER TO AREAS AND WITH THICKNESSES INDICATED. PRIOR TO APPLYING NICKEL, A THIN LAYER OF COPPER (.010 MAXIMUM THICKNESS) SHALL BE ELECTROFORMED TO CLOSE-OUT THE CHAMBER LINER ① CHANNELS.

19△ A. AMZIRC ZIRCONIUM COPPER ALLOY (CDA 150) OF THE FOLLOWING COMPOSITION:
   99.8% OFHC COPPER (INCLUDING SILVER AND .001% MAXIMUM OXYGEN)
   .10-.20% ZIRCONIA

B. FORGING REQUIREMENTS: HOT, UPSET AND CROSS GRAIN FORGED WITH DIAMETRAL SECTIONS TO BE TAKEN FOR UNIFORMITY OF MICROSTRUCTURE, GRAIN SIZE, COMPOSITION, AND FREEDOM FROM CENTER DEFECTS (BURSTS, CRACKS, VOIDS, PIPING, ETC.).

C. ULTRASONIC INSPECT PER MIL-STD-2154, CLASS B.

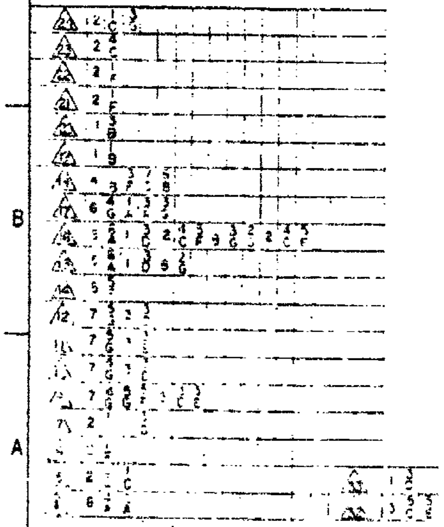

20△ ACCEPTABLE ALTERNATE MATERIAL .. LOW-CARBON NICKEL UNS N02201 PER ASTM B160 OR B162, CONDITION AND FINISH OPTIONAL.

21△ PENETRANT INSPECT FUSION WELDS PER ATC-STD-4942, TYPE I, METHOD A. ACCEPTANCE CRITERIA PER ATC-STD-4005, CLASS I.

22△ RADIOGRAPHICALLY INSPECT WELDS PER ATC-STD-4819, ACCEPTANCE CRITERIA PER ATC-STD-4005, CLASS I.

23△ MARK PER AS478-7A WITH 1903169, APPLICABLE DASH NO. AND AEROJET TECHSYSTEMS COMPANY (ATC) ASSIGNED SERIAL NO.

24△ AFTER ELECTRON BEAM WELDING, MACHINE INDICATED SURFACE TO PROVIDE REQUIRED OVERALL CHAMBER LENGTH OF 8.030 ± .005 INCHES.

25 MILLIPORE FILTERS (FSCM NO. 08071) RATED AT 100 MICRONS ABSOLUTE, OR LOWER, SHALL BE USED WHEN FLOWING ANY FLUID THROUGH THE CHAMBER ASSEMBLY.

26 AFTER FINAL MACHINING OF ELECTROFORMED NICKEL SURFACES IN PREPARATION OF ELECTRON BEAM WELDING ② TO ①, REMOVE WAX FROM COOLANT CHANNELS AND VERIFY WAX REMOVAL PER COGNIZANT ENGINEER. ALL COOLANT CHANNELS SHALL FLOW FULL AND UNIFORM.

27 PROOF AND LEAK TESTS: THE CHAMBER ASSEMBLY SHALL BE SUBJECTED TO TEMPERATURE COMPENSATED PROOF AND LEAK TESTS AS FOLLOWS:

A. CHANNEL PROOF TEST: USING CLEAN, DRY $GN_2$, PRESSURIZE THE CHANNELS TO 660 ± 10 PSIG FOR 3 MINUTES MINIMUM. THERE SHALL BE NO EVIDENCE OF PERMANENT DEFORMATION OR FAILURE OF THE INNER CHAMBER WALL.

B. CHAMBER PROOF TEST: USING CLEAN, DRY $GN_2$, PRESSURIZE THE CHANNELS TO 660 ± 10 PSIG AND THE CHAMBER INTERIOR TO 500 ± 10 PSIG FOR 3 MINUTES MINIMUM. THERE SHALL BE NO EVIDENCE OF PERMANENT DEFORMATION OR FAILURE OF THE ELECTROFORMED NICKEL JACKET.

C. CHANNEL LEAK TEST: USING CLEAN, DRY $GN_2$, PRESSURIZE THE CHANNELS TO 120 ± 10 PSIG FOR 5 MINUTES MINIMUM. THERE SHALL BE NO EVIDENCE OF LEAKAGE GREATER THAN 1 x 10-3 SCCS ALLOWED.

28 PERFORM FLOW CALIBRATION TEST ON THE CHAMBER COOLANT CIRCUIT PER COGNIZANT ENGINEER, AS FOLLOWS: USING CLEAN, DRY $GN_2$, FLOW TO ATMOSPHERIC PRESSURE AT INLET PRESSURES OF 1.0, 2.0, 4.0, 6.0, 8.0, 10.0, 12.0 AND 15.0 PSIG. FOR EACH DATA POINT, RECORD THE INLET PRESSURE, $GN_2$ FLOW RATE AND NOMINAL $GN_2$ FLOW TEMPERATURE.

29 AFTER PROOF AND LEAK TESTS PER NOTE 27, PENETRANT INSPECT ELECTROFORMED NICKEL JACKET PER ATC-STD-4942, TYPE I, METHOD A. THE NICKEL SURFACE SHALL BE FREE OF CRACKS, POROSITY AND VOIDS.

30 VENDOR SHALL PROVIDE ELECTRON BEAM WELDING SAMPLES THAT SIMULATE WELD JOINTS BETWEEN ② AND ③.

31 MEASUREMENTS OF THE CHAMBER LINER ① OUTER SURFACE SHALL BE RECORDED TO BE USED FOR FUTURE REFERENCE DURING ELECTROFORMING PER NOTE 18△ TO DETERMINE NICKEL THICKNESSES.

32△ ELECTROFORMED NICKEL THICKNESS AND TOLERANCE IS AS INDICATED, EXCEPT IN THE CYLINDRICAL REGION OF THE CHAMBER WHERE THE SPECIFIED OUTER DIAMETER CONTROLS THE THICKNESS OF THE NICKEL.

33△ PRECISION INDUSTRIAL COMPONENTS CORP., P.O. BOX 1039, BENSON ROAD, MIDDLEBURY, CT 06762.

DEVELOPMENT H
FOR TEST OR EXPERIM

| LTR | DESCRIPTION | RELEASE DATE | APPROVED |
|---|---|---|---|
| A | SEE 'A' DCN | 87-2-12 | [illegible] |
| B | SEE 'B' DCN | 87-12-4 | [illegible] |

|  | [illegible] | [illegible] | CODE IDENT | PART OR IDENTIFYING NO. | NOMENCLATURE OR DESCRIPTION | MATERIAL SPECIFICATION | ZONE | ITEM NO |
|---|---|---|---|---|---|---|---|---|
|  |  |  |  |  |  |  |  | 25 |
| 7 | AR |  | 71543 |  | BRAZE ALLOY | NO. 1600-N FOIL .005 THK |  | 24 |
| 15 |  | AR |  |  | BRAZE ALLOY | NI 620 POWDER AMS 4757 | 3 G | 23 |
|  |  |  |  |  |  |  |  | 22 |
| 6 | AR |  |  |  | WELD WIRE | ER NiMo-3 OR ERNiCr-3 AWS A5.14 |  | 21 |
| 18 |  | 16 | 93768 | 402-2101 | THERMO-COUPLE | TYPE 83 ASSY GROUNDED JUNCTION | 4 A 3 G | 20 |
|  |  |  |  |  |  |  |  | 19 |
|  |  |  |  |  |  |  |  | 18 |
|  |  |  |  |  |  |  |  | 17 |
|  | 4 |  |  | MS51830 CA301 | INSERT |  | 2 B C | 16 |
|  | 1 |  |  | MS20519 -6L | SLEEVE |  | 2 3 F | 15 |
| 13 | 2 |  |  | 040-250 | PIN, DOWEL |  | 2 3 D 5 [illegible] | 14 |
|  |  |  |  |  |  |  |  | 13 |
|  | 1 |  |  | AN315 -4 | NUT |  | 2 3 F | 12 |
|  |  |  |  |  |  |  |  | 11 |
|  |  | AR |  |  |  | ELECTROFORMED NICKEL 18 |  | 10 |
|  | 1 |  |  | -9 | LINER, JACKETED |  | 5 3 C | 9 |
|  |  |  |  |  |  |  |  | 8 |
|  |  |  |  |  |  |  |  | 7 |
|  |  |  |  |  |  |  |  | 6 |
|  |  |  |  |  |  |  |  | 5 |
|  |  |  |  |  |  |  |  | 4 |
|  | 1 |  |  | -3 | TUBE, INLET | [illegible] | 2 F | 3 |
| 20 | 1 |  |  | -2 | RING, MANIFOLD | NICKEL, UNS N02200 ASTM B160 OR B 162 [illegible] | 2 F | 2 |
|  |  | 1 |  | -1 | LINER, CHAMBER | 19 | 4 [illegible] | 1 |

PARTS LIST

CONTRACT NO. NAS3-26398

DO NOT SCALE DRAWING

**DEVELOPMENT HARDWARE**
FOR TEST OR EXPERIMENTATION

TechSystems COMPANY

# CHAMBER ASSEMBLY

| SIZE | CODE IDENT NO. | DWG NO. |
|---|---|---|
| E | 05824 | 1201414 |

| SCALE | RELEASE DATE | SHEET |
|---|---|---|
| 1/1 | [illegible] | 1 OF 8 |

1201414

NOTES:

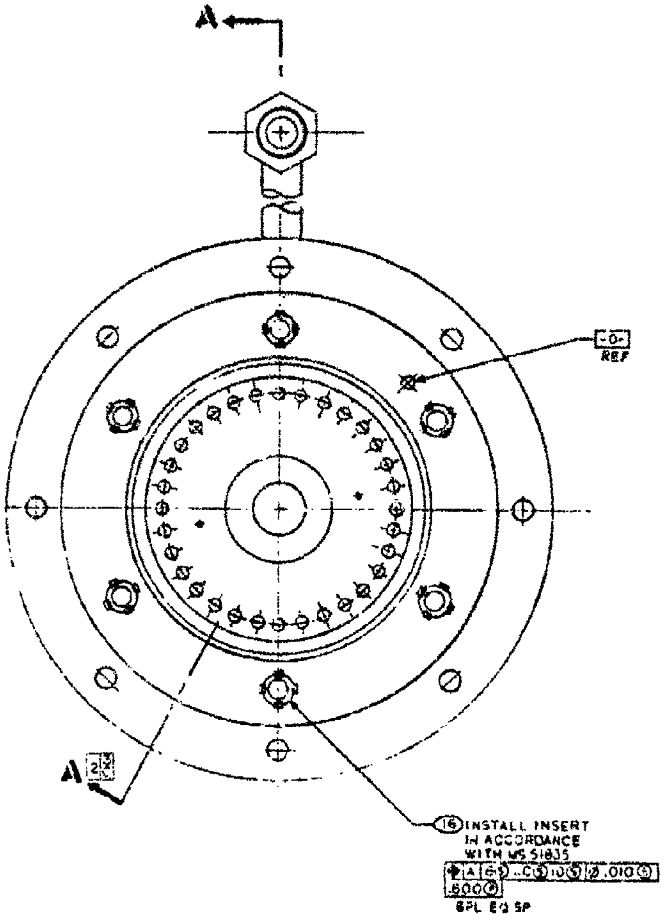
A
-D-
REF
A 2
16 INSTALL INSERT
IN ACCORDANCE
WITH MS 51835
⌖ A 6 ⓢ .C ⓢ 10 ⓢ Ø.010 ⓢ
.600 Ⓟ
6PL EQ SP

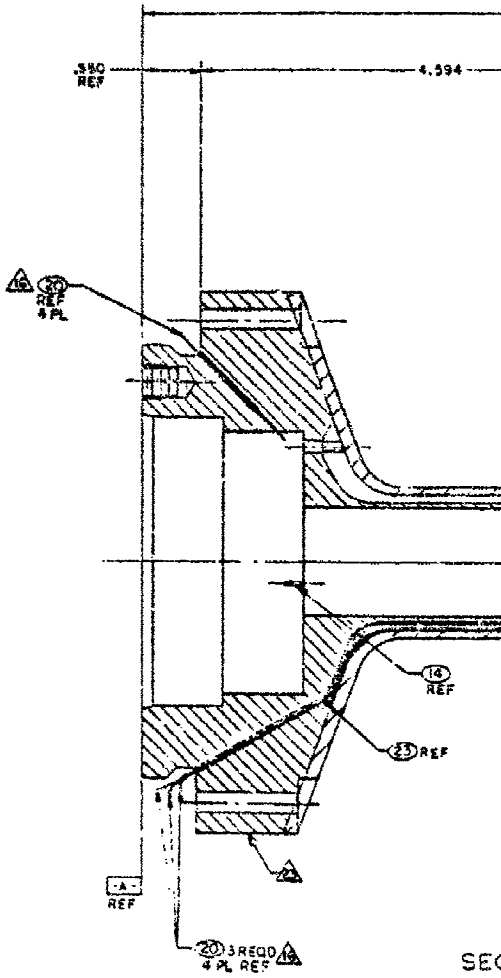
.350
REF
4.594
16 20
REF
4 PL
14
REF
23 REF
24
-A-
REF
20 3 REQD 16
4 PL REF
SEC

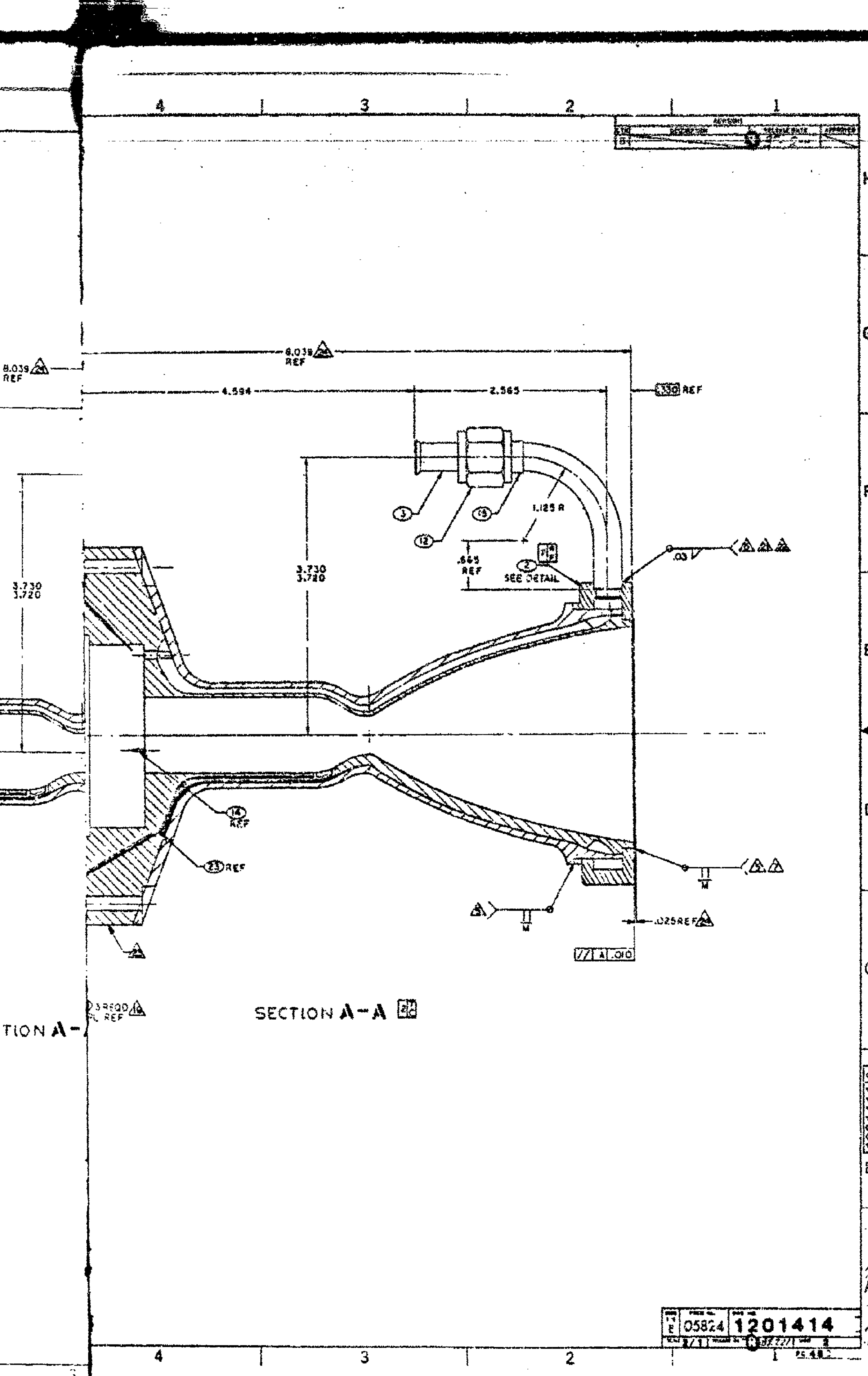4
3
2
1
H
G
F
E
D
C
B
A
8.039 REF
8.039 REF
4.594
2.565
.330 REF
3
12
15
1.125 R
.665 REF
2 SEE DETAIL
.03
3.730
3.720
3.730
3.720
14 REF
23 REF
M
M
.025 REF
// A .010
3 REQD
FL REF
SECTION A-A
TION A-
1201414
E 05824
1201414
1/1
PS.4

NOTES:

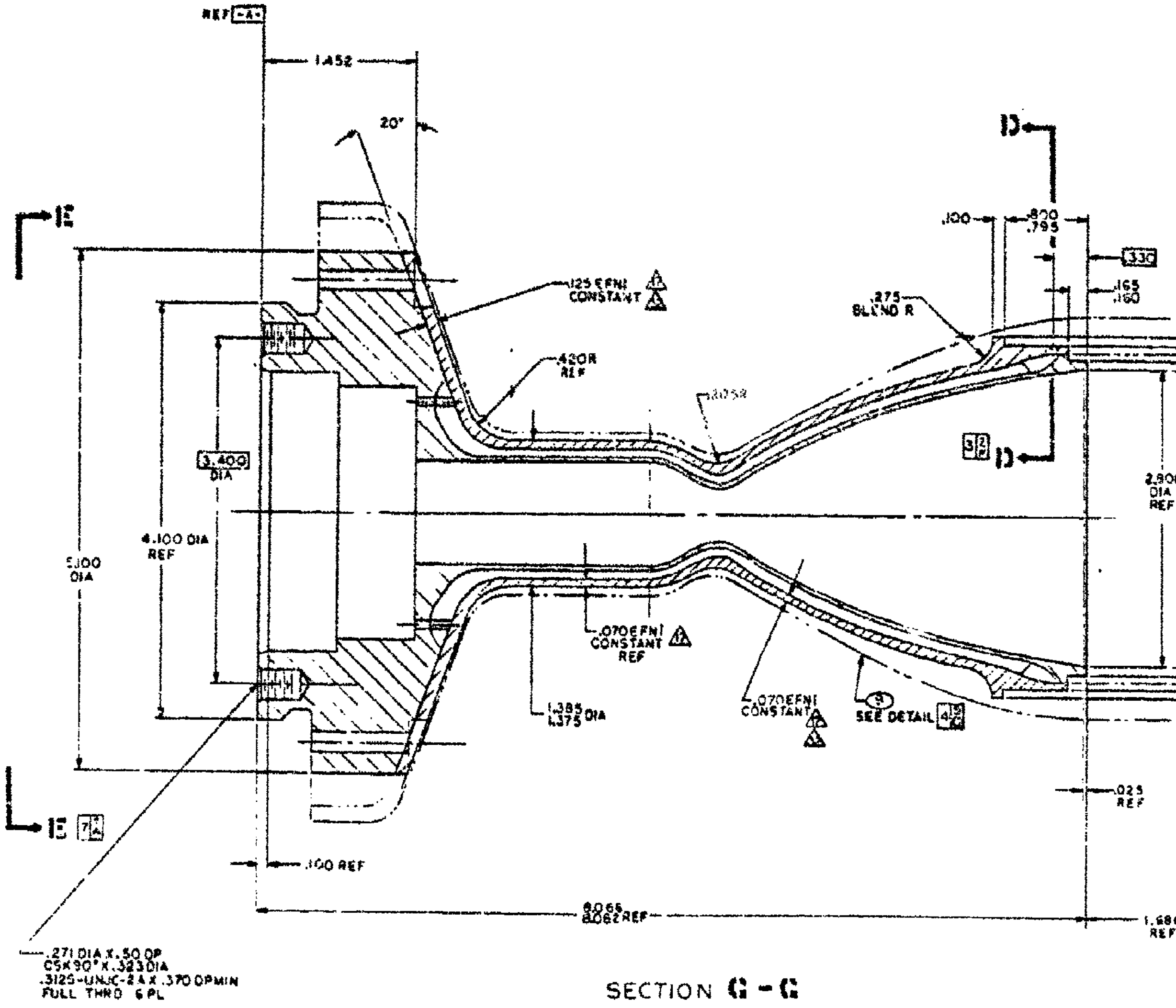

SECTION G - G

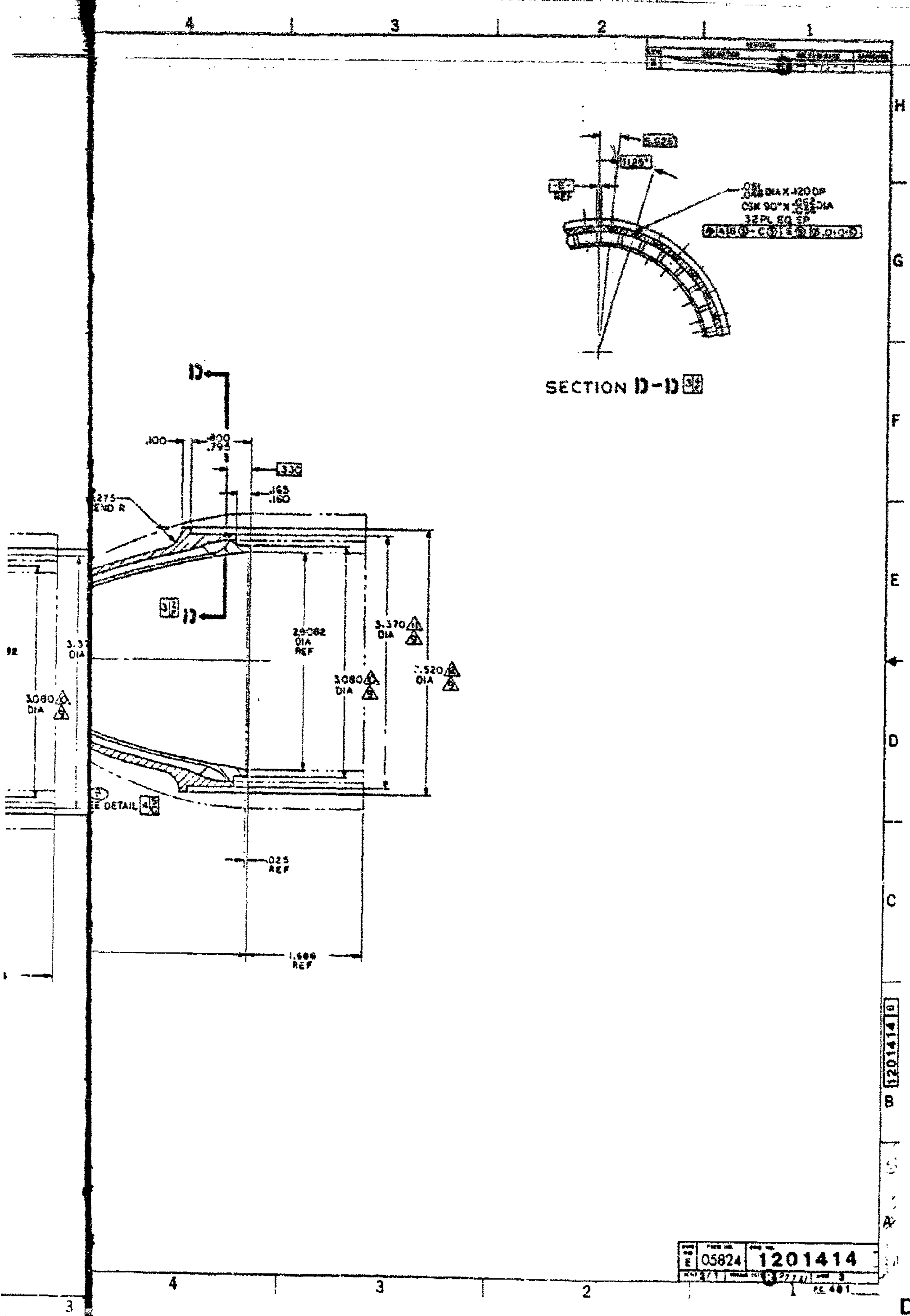
4
3
2
1
H
G
F
E
D
C
B
A
5.625
11.25°
-E-
REF
.051 .048 DIA X .120 DP
CSK 90° X .062 .052 DIA
32 PL EQ SP
SECTION D-D
D
.100
.800
.795
.330
.165
.160
.275
END R
3.3
DIA
2.9082
DIA
REF
3.370
DIA
3.080
DIA
3.520
DIA
3.080
DIA
SEE DETAIL
.025
REF
1.686
REF
E
05824
1201414
2/1
R
3
PL 401
1201414

NOTES

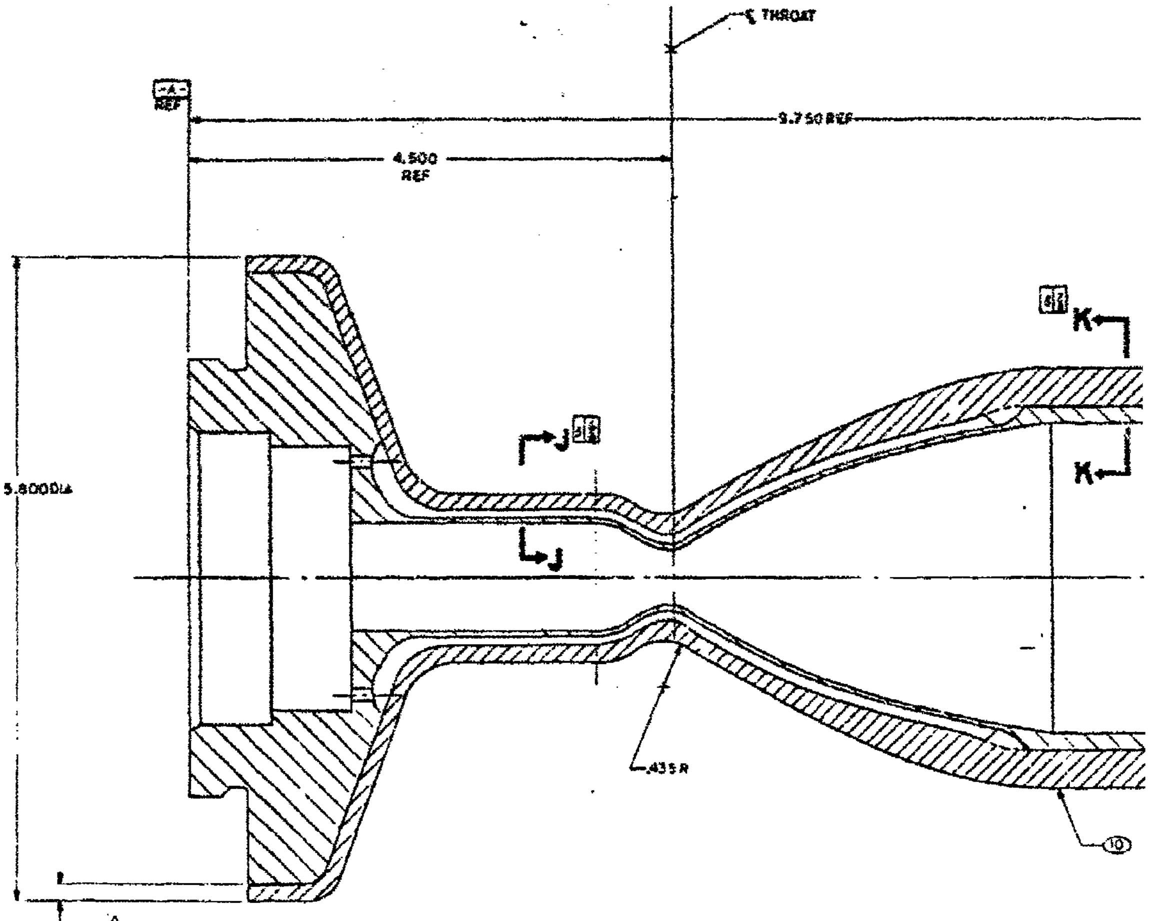

⑨ DETAIL

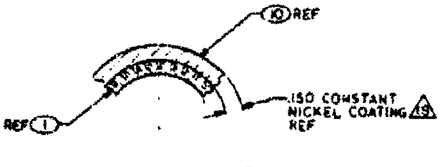

VIEW J-J

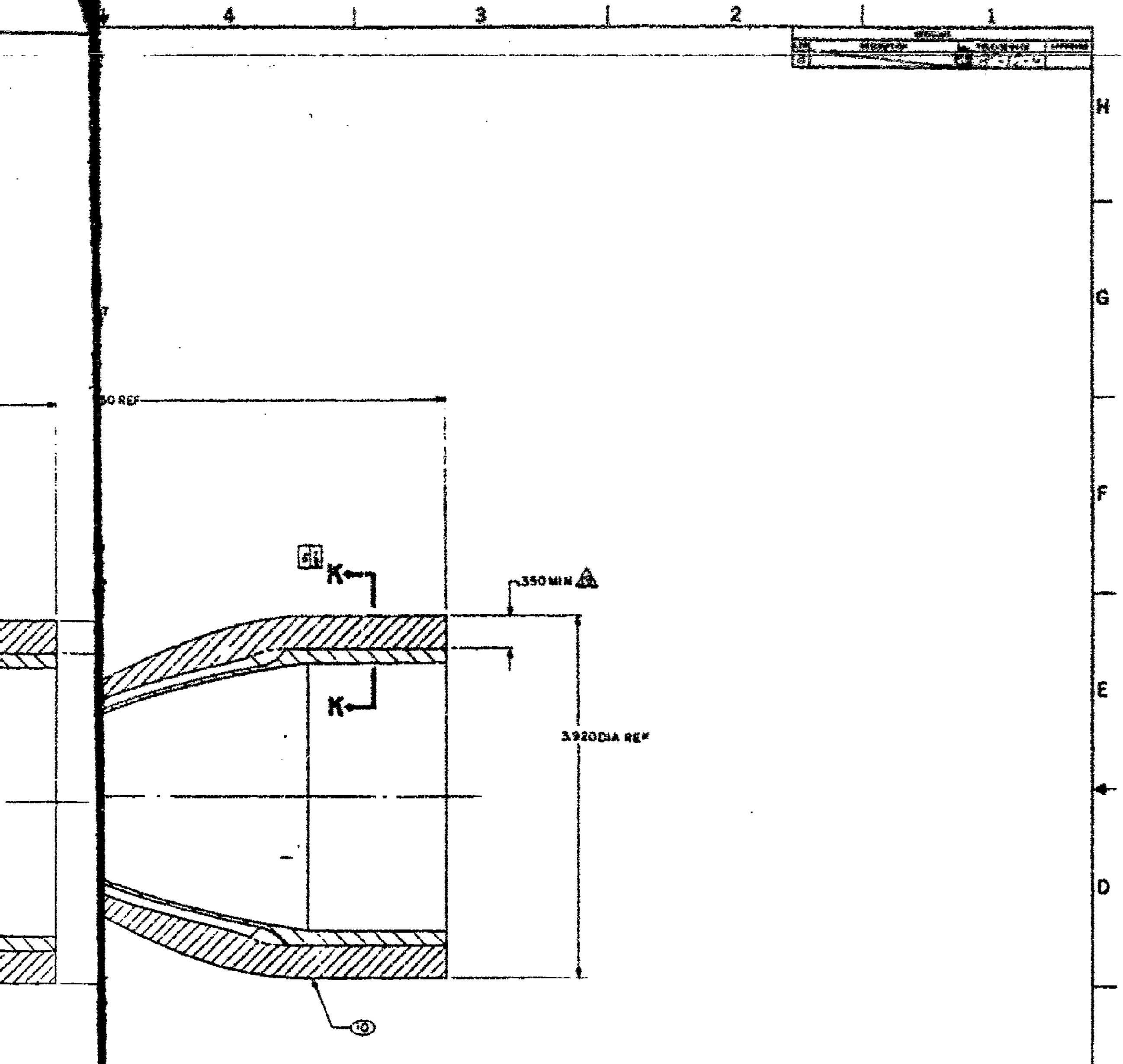

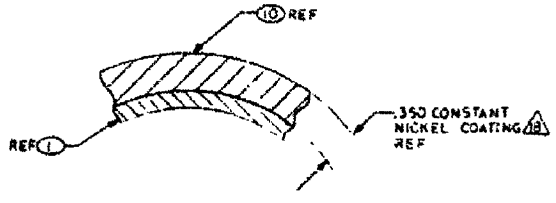

VIEW **K-K** 5 4/F

E 05824 **1201414**

2/1 K 4

FL 481

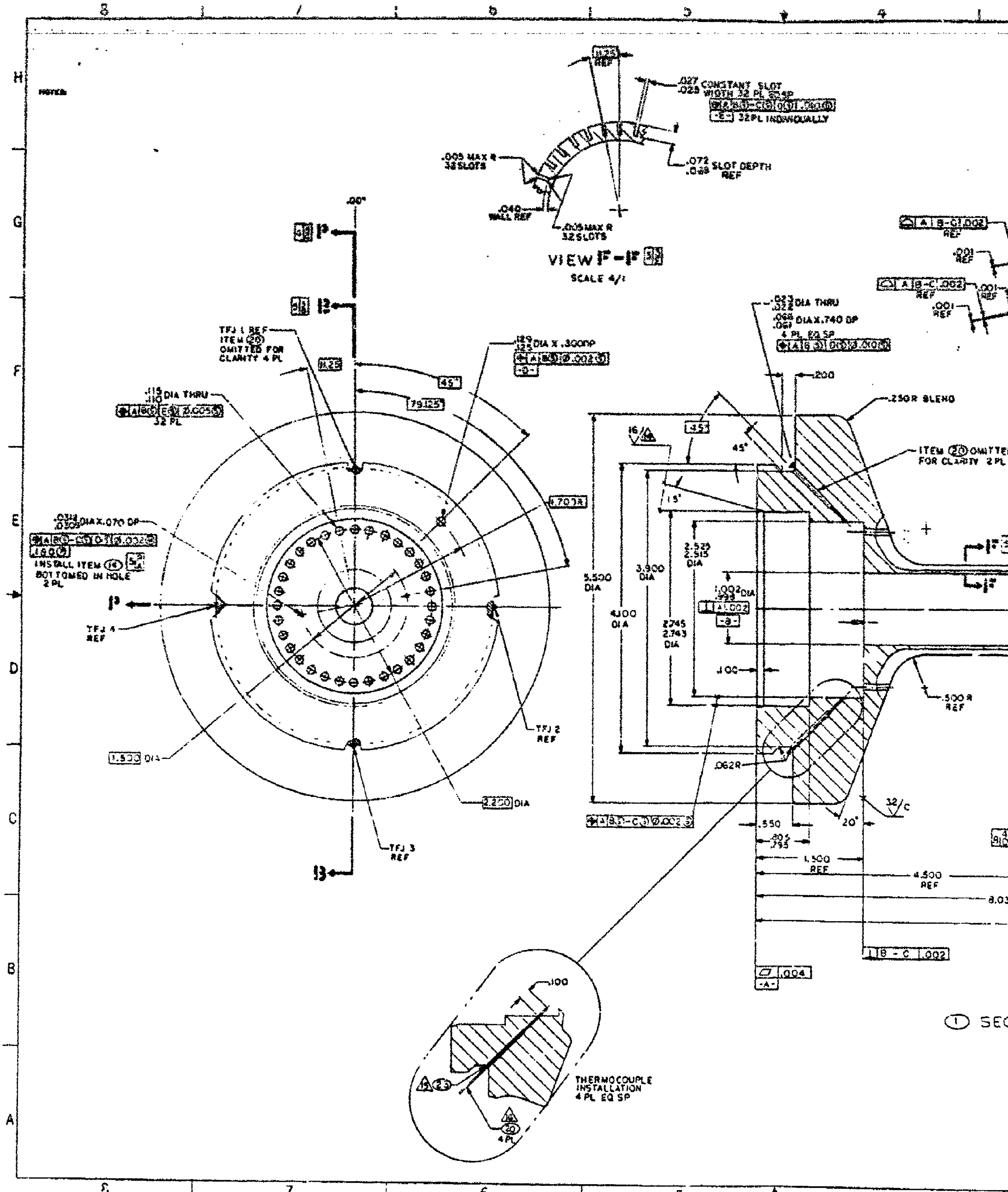

NOTES:
.027 .025 CONSTANT SLOT WIDTH 32 PL EQ SP
-E- 32 PL INDIVIDUALLY
11.25 REF
.005 MAX R 32 SLOTS
.072 .068 SLOT DEPTH REF
.040 WALL REF
.005 MAX R 32 SLOTS
VIEW F-F
SCALE 4/1
.00°
TFJ 1 REF
ITEM 20 OMITTED FOR CLARITY 4 PL
11.25
.129 .125 DIA X .300 DP
-D-
45°
79.125°
.115 .110 DIA THRU
32 PL
.0314 .0305 DIA X .070 DP
INSTALL ITEM 14 BOTTOMED IN HOLE 2 PL
TFJ 4 REF
TFJ 2 REF
1.703R
1.500 DIA
2.250 DIA
TFJ 3 REF
.023 .022 DIA THRU
.068 .061 DIA X .740 DP
4 PL EQ SP
.200
.250R BLEND
ITEM 20 OMITTED FOR CLARITY 2 PL
A B-C .002 REF
.001 REF
.001 REF
.001 REF
A B-C .002 REF
16
.457
45°
15°
5.500 DIA
3.900 DIA
4.100 DIA
2.525 2.515 DIA
2.745 2.743 DIA
1.002 .998 DIA
A .002
-B-
.100
.500 R REF
.062R
32/C
20°
.550
.805 .795
1.500 REF
4.500 REF
8.03
B - C .002
.004
-A-
① SEC
.100
THERMOCOUPLE INSTALLATION 4 PL EQ SP
23
20
4 PL
8
7
6
5
4
H
G
F
E
D
C
B
A

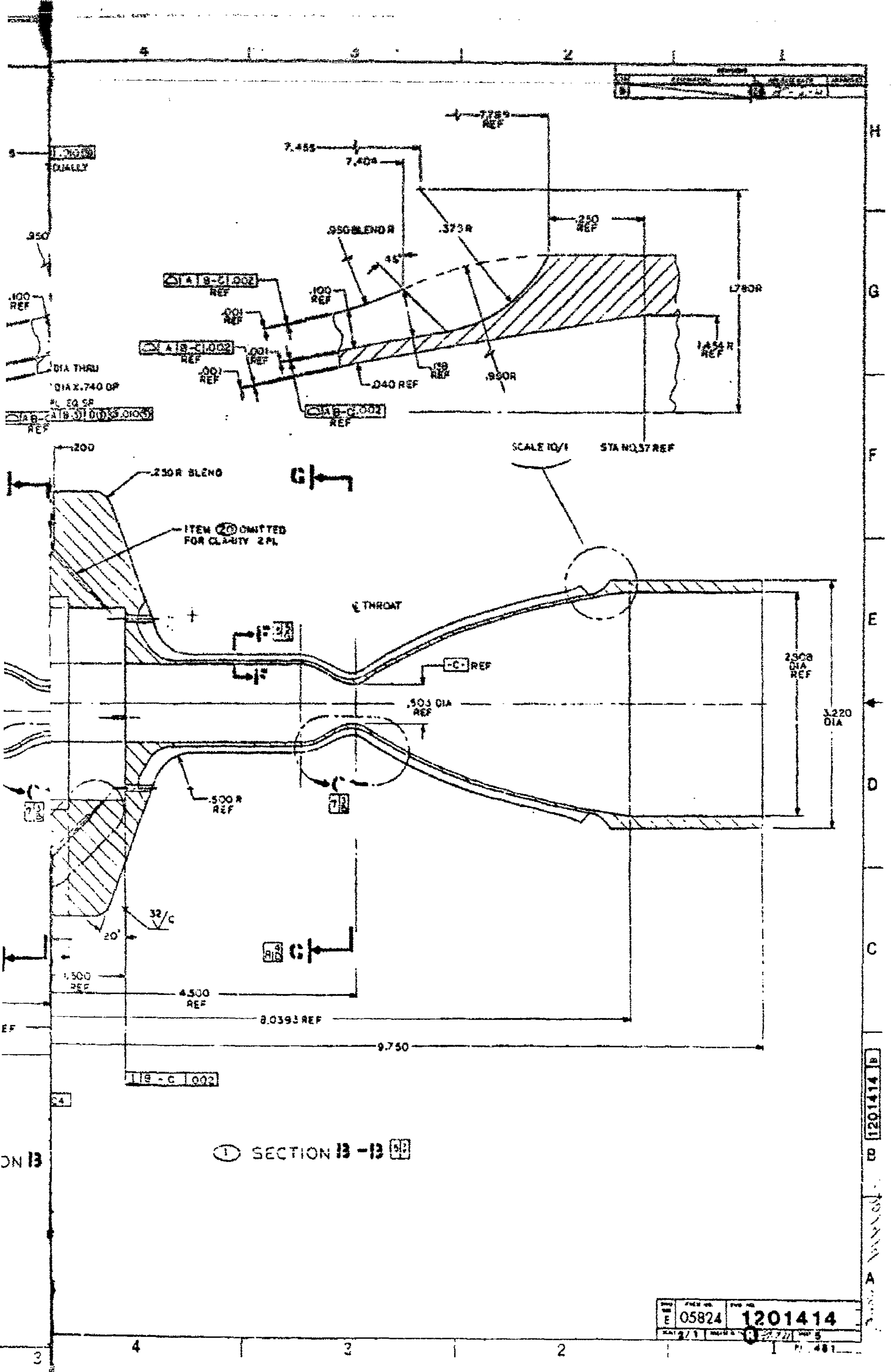
7.789 REF
7.455
7.404
.250 REF
.950 BLEND R
.373 R
45°
1.780R
.100 REF
.001 REF
.001 REF
.001 REF
A B-C .002 REF
A B-C .002 REF
A B-C .002 REF
.040 REF
.119 REF
.950R
1.454 R REF
SCALE 10/1
STA NO.57 REF
.950
.100 REF
DIA THRU
DIA X .740 DP
PL EQ SP
.200
.250R BLEND
G
ITEM 20 OMITTED FOR CLARITY 2 PL
F
℄ THROAT
-C- REF
2.508 DIA REF
3.220 DIA
.503 DIA REF
.500 R REF
32/C
20°
1.500 REF
4.500 REF
8.0393 REF
9.750
B-C .002
SECTION B-B
ON B
E 05824 1201414
2/1
5
481

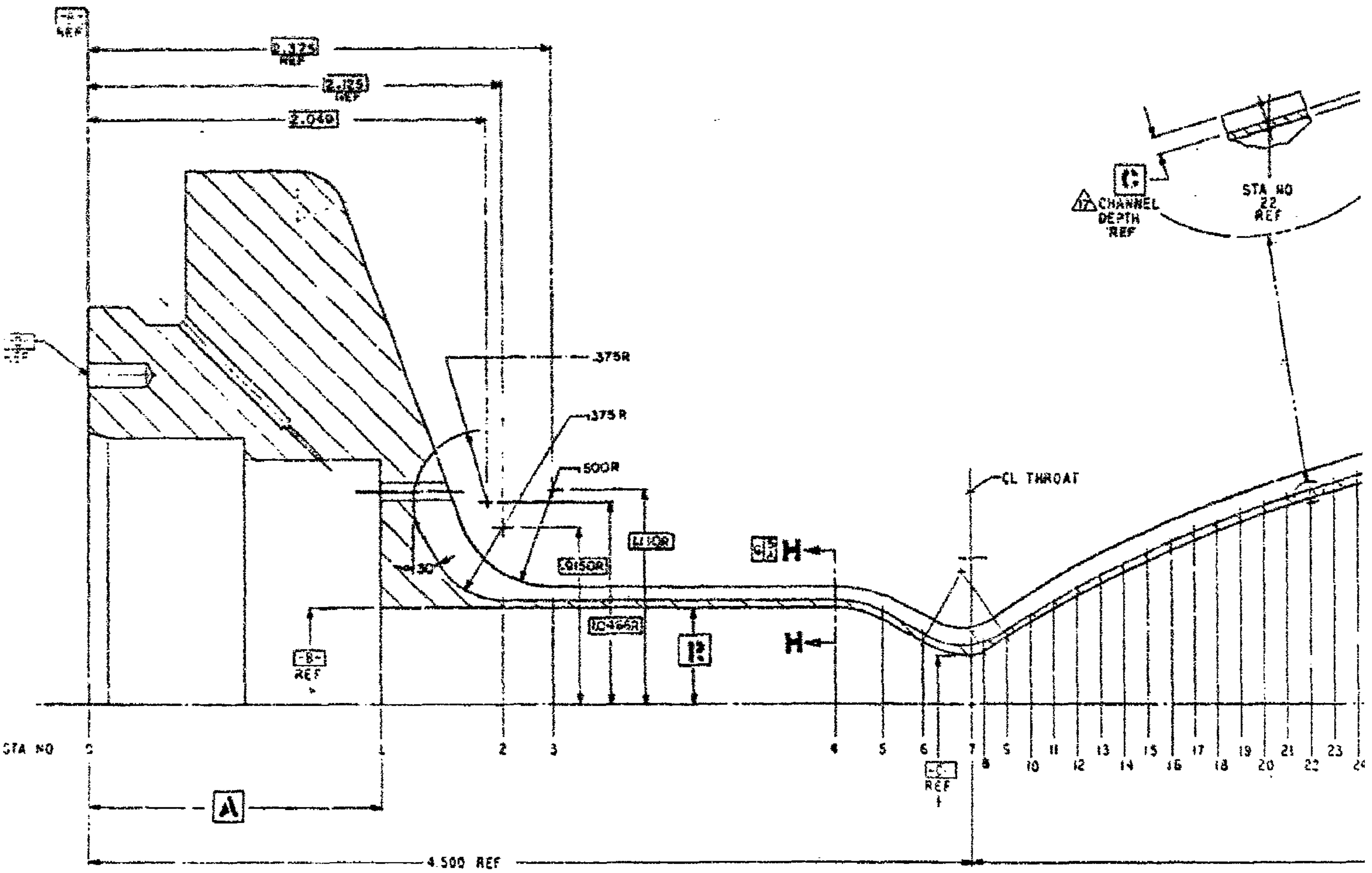

SECTION P – P 5/7
SCALE 4/1

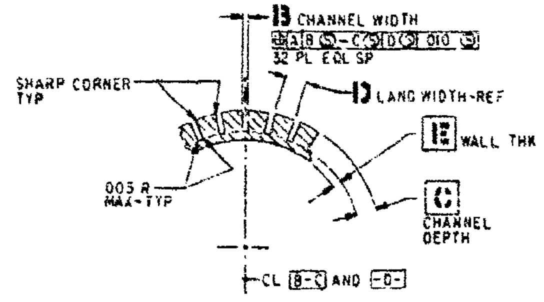

SECTION H – H 6/E

| STA NO ④ | A DIM ± .0050 | R RADIUS BASIC | B CHANNEL WIDTH ± .0010 | C CHAN DEP BAS |
|---|---|---|---|---|
| 20 | 5.9958 | .4800 | .0250 | .1 |
| 19 | 5.8785 | .3375 | .0250 | .1 |
| 18 | 5.7584 | .3928 | .0250 | .1 |
| 17 | 5.6411 | .4462 | .0250 | .1 |
| 16 | 5.5246 | .7571 | .0250 | .1 |
| 15 | 5.4038 | .7038 | .0250 | .1 |
| 14 | 5.2819 | .6869 | .0250 | .1 |
| 13 | 5.1619 | .6290 | .0250 | .1 |
| 12 | 5.0428 | .5801 | .0250 | .1 |
| 11 | 4.9256 | .4972 | .0250 | .1 |
| 10 | 4.8018 | .4188 | .0250 | .2 |
| 9 | 4.6790 | .3420 | .0250 | .3 |
| 8 | 4.5416 | .2678 | .0250 | .0 |
| 7 | 4.5000 | .2514 | .0250 | .3 |
| 6 | 4.2500 | .3182 | .0250 | .0 |
| 5 | 4.0417 | .4538 | .0250 | .3 |
| 4 | 3.8011 | .5066 | .0250 | .0 |
| 3 | 2.3750 | .5000 | .0250 | .0 |
| 2 | 2.1250 | .5000 | .0250 | .1 |
| 1 | 1.5000 | .5000 | — | - |
| 0 | 0.0000 | — | -- | - |

STATION CO

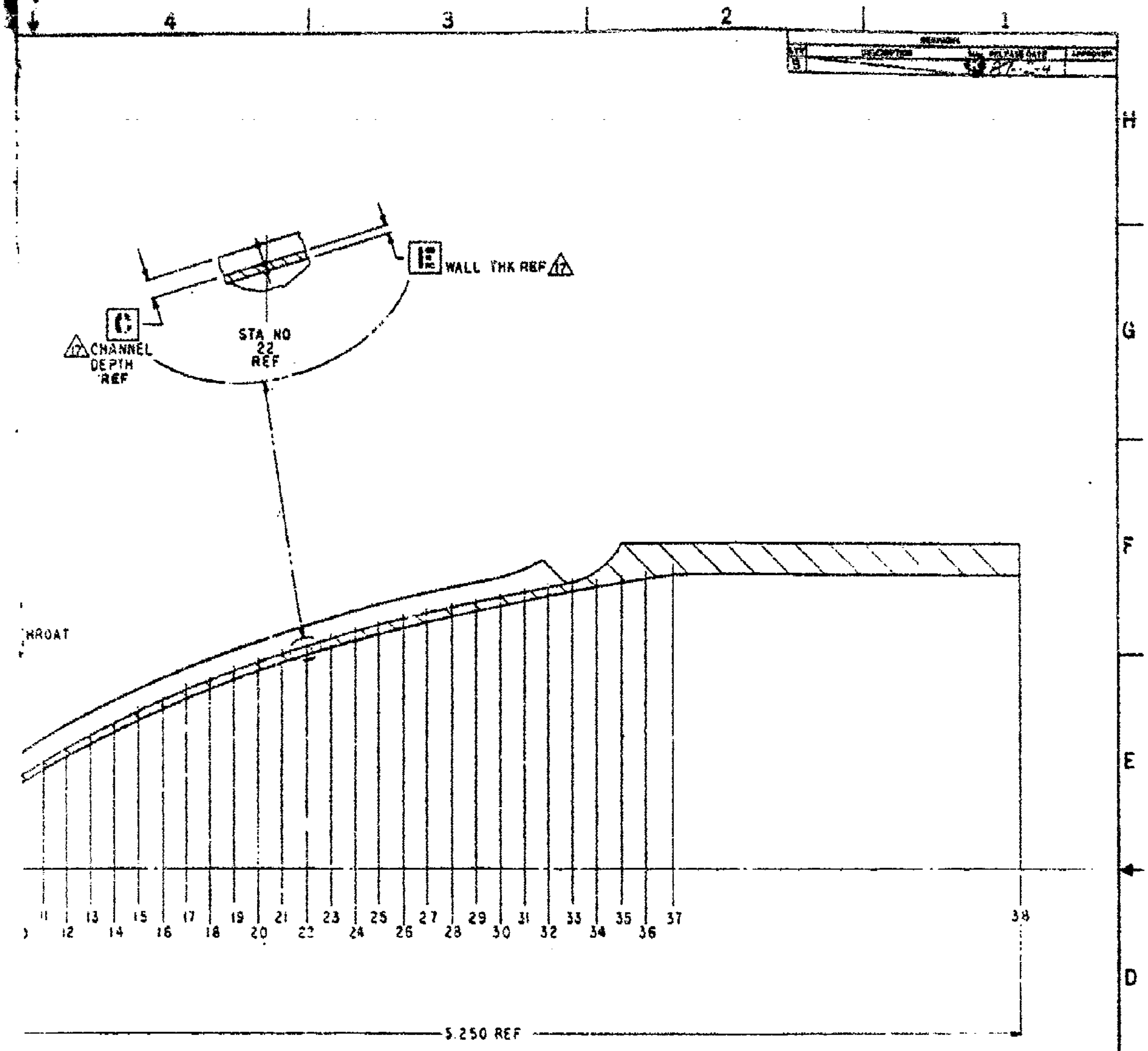

| STA NO 4 | A DIA ± .0005 | R RADIUS BASIC | B CHANNEL WIDTH ± .0005 | C 17 CHANNEL DEPTH BASIC | D LAND WIDTH REF AT O.D. | E 17 WALL THK BASIC | NOTATION, REF |
|---|---|---|---|---|---|---|---|
| 20 | 5.9958 | .5000 | .0250 | .1000 | .185 | .0400 | |
| 19 | 5.8766 | .4375 | .0250 | .1000 | .185 | .0400 | |
| 18 | 5.7500 | .8828 | .0250 | .1000 | .176 | .0400 | |
| 17 | 5.6411 | .4461 | .0250 | .1000 | .166 | .0400 | |
| 16 | 5.5248 | .7471 | .0250 | .1000 | .157 | .0400 | |
| 15 | 5.4038 | .7938 | .0250 | .1000 | .146 | .0400 | |
| 14 | 5.2310 | .5000 | .0250 | .1000 | .130 | .0400 | |
| 13 | 5.1619 | .8240 | .0250 | .1003 | .122 | .0400 | |
| 12 | 5.0426 | .5401 | .0250 | .1010 | .108 | .0400 | |
| 11 | 4.9256 | .4532 | .0250 | .1000 | [illegible] | .0400 | |
| 10 | 4.8018 | .1180 | .0250 | [illegible] | [illegible] | .0400 | |
| 9 | 4.6798 | .3470 | .0250 | .0800 | .080 | .0400 | |
| 8 | 4.5618 | .2870 | .0250 | .0800 | .085 | .0400 | TANGENT POINT 4 |
| 7 | 4.5000 | .2519 | .0250 | .0800 | .085 | .0459 | ℄ THROAT 4 |
| 6 | 4.2500 | .3182 | .0250 | .0800 | .080 | .0400 | TANGENT POINT 3 |
| 5 | 4.0619 | .4370 | .0250 | .0800 | .075 | .0400 | TANGENT POINT 2 |
| 4 | 3.8619 | .5000 | .0250 | .0700 | .085 | .0400 | TANGENT POINT 1 |
| 3 | 2.3750 | .5000 | .0250 | .0700 | .085 | .0400 | |
| 2 | 2.1250 | .5000 | .0250 | .1372 | .100 | .0400 | |
| 1 | 1.5000 | .2000 | — | — | — | — | BEGINNING OF DIVERG. SECTION |
| 0 | 0.0000 | — | — | — | — | — | DATUM A |

STATION CONTOUR COORDINATES

| STA NO 3 | A DIA ± .0020 | R RADIUS BASIC | B CHANNEL WIDTH ± .0020 | C 17 CHANNEL DEPTH BASIC | D LAND WIDTH REF AT O.D. | E 17 WALL THK BASIC | NOTATION, REF |
|---|---|---|---|---|---|---|---|
| 38 | 9.7500 | 1.4541 | | | --- | | END OF LINER |
| 37 | 8.0765 | 1.4541 | | | --- | | CHAMBER EXIT. ε = 33.98 |
| 36 | 7.9025 | 1.4538 | | | --- | | |
| 35 | 7.7830 | 1.4146 | | | --- | | MANIFOLD ENDPOINT |
| 34 | 7.6638 | 1.3996 | | | --- | | MANIFOLD |
| 33 | 7.5000 | 1.3736 | | | --- | | MANIFOLD |
| 32 | 7.4256 | 1.3516 | .0250 | .1200 | .272 | .0400 | CHANNEL ENDPOINT |
| 31 | 7.3084 | 1.3204 | .0250 | .1000 | .263 | .0400 | |
| 30 | 7.1880 | 1.3042 | .0250 | .1000 | .258 | .0400 | |
| 29 | 7.0684 | 1.2784 | .0250 | .1000 | .253 | .0400 | |
| 28 | 6.9467 | 1.2513 | .0250 | .1000 | .247 | .0400 | |
| 27 | 6.8299 | 1.2232 | .0250 | .1000 | .242 | .0400 | |
| 26 | 6.7106 | 1.1535 | .0250 | .1000 | .236 | .0400 | |
| 25 | 6.5910 | 1.1624 | .0250 | .1000 | .230 | .0400 | |
| 24 | 6.4736 | 1.1298 | .0250 | .1000 | .223 | .0400 | |
| 23 | 6.3540 | 1.0957 | .0250 | .1000 | .216 | .0400 | |
| 22 | 6.2354 | 1.0591 | .0250 | .1000 | .209 | .0400 | |
| 21 | 6.1151 | 1.0295 | .0250 | .1000 | .201 | .0400 | |

COORDINATES CONTINUED

E 05824 1201414

SCALE 2/1

1201414 B

NOTES:

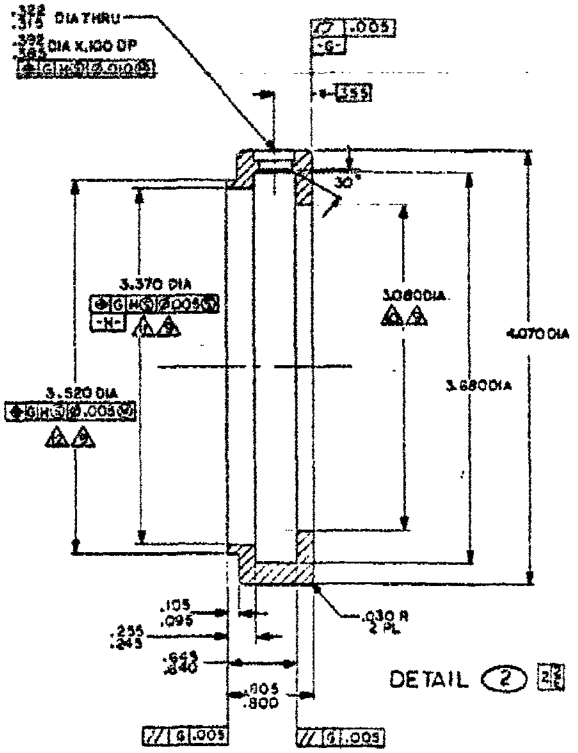

DETAIL ②

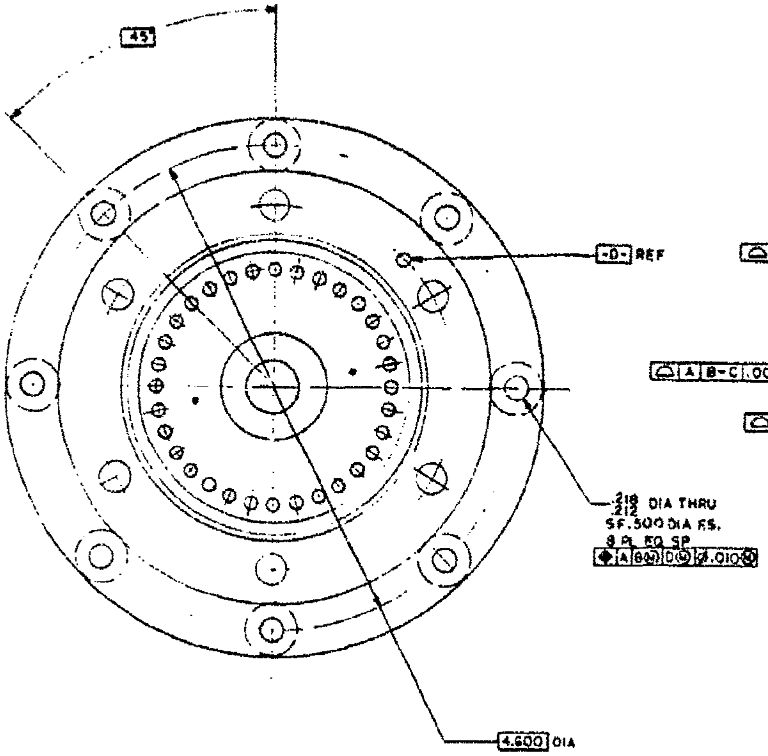

VIEW E-E

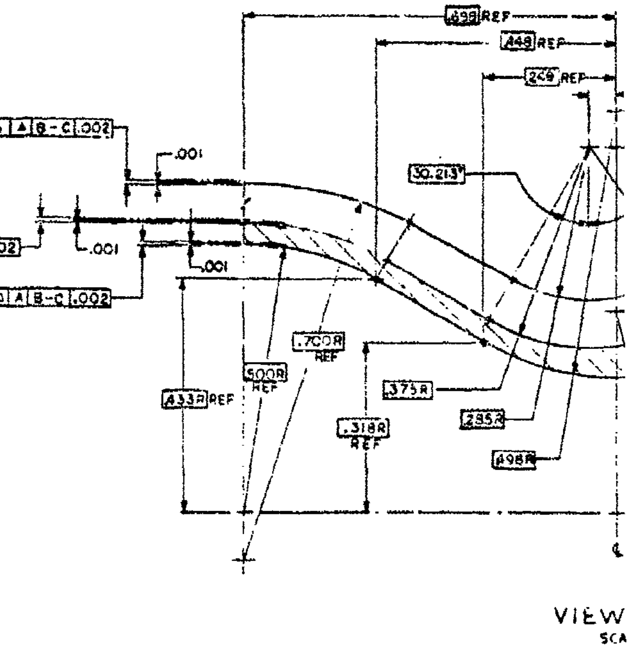

VIEW
SCA

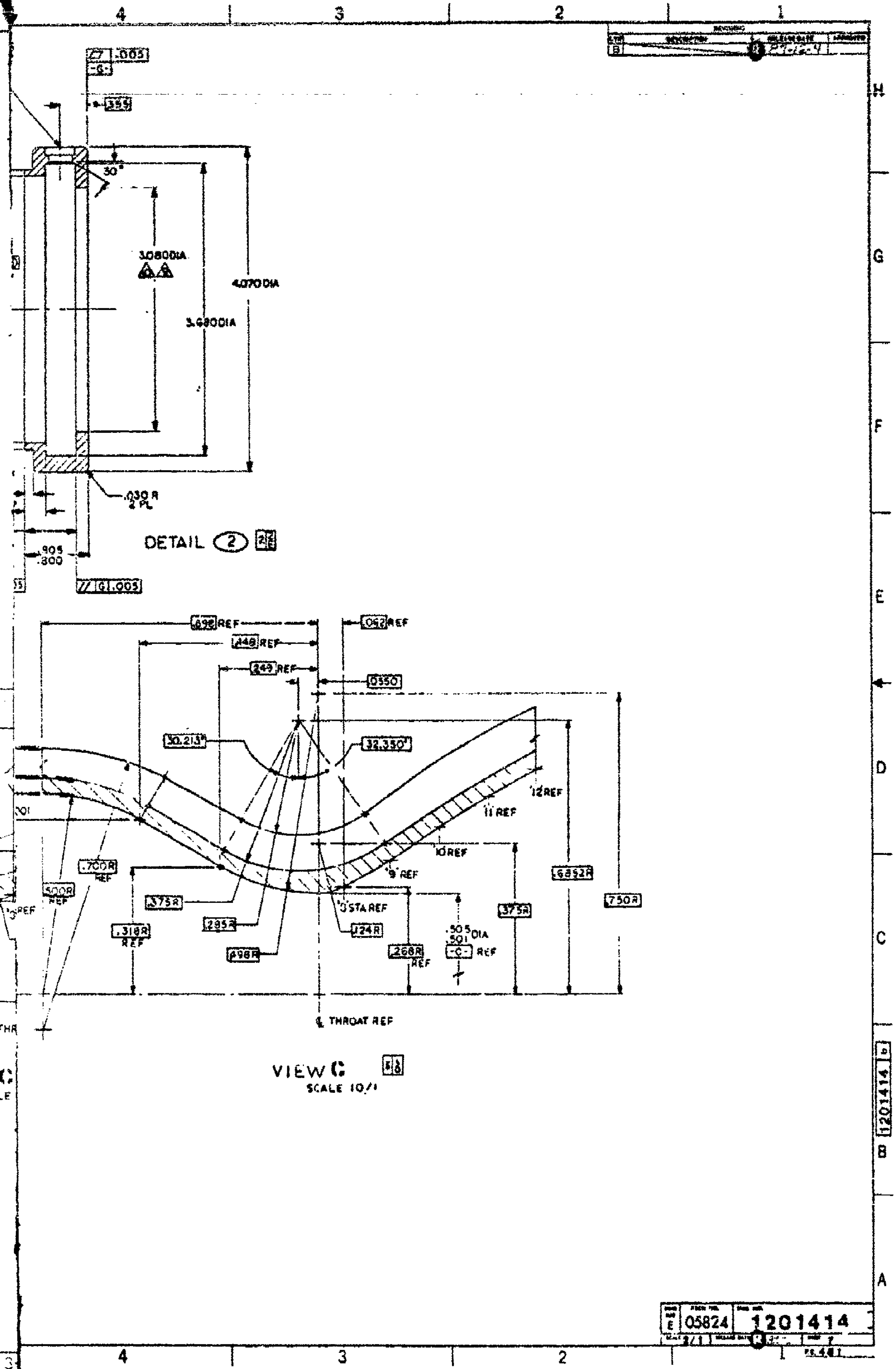
4
3
2
1
B
.005
-G-
.355
30°
3.080 DIA
4.070 DIA
3.680 DIA
.030 R
2 PL
.905
.800
// G .005
DETAIL ② 2/E
H
G
F
E
D
C
B
A
.898 REF
.448 REF
.249 REF
.062 REF
.0550
30.213°
32.350°
12 REF
11 REF
10 REF
9 REF
.6852R
.750R
.700R REF
.500R REF
.375R
.318R REF
.285R
.898R
0 STA REF
.124R
.268R REF
.505
.501 DIA
-C- REF
.375R
℄ THROAT REF
VIEW C
SCALE 10/1
1201414 B
E
05824
1201414
2/1
F5.481

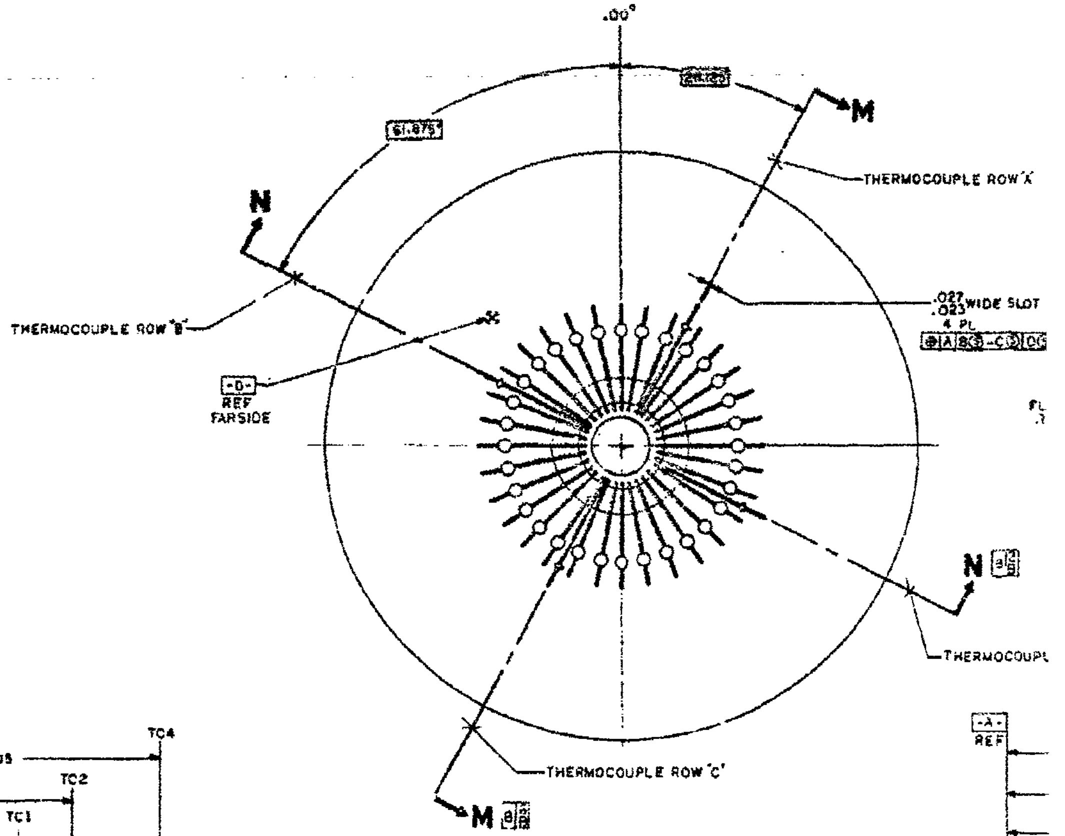

VIEW G – G

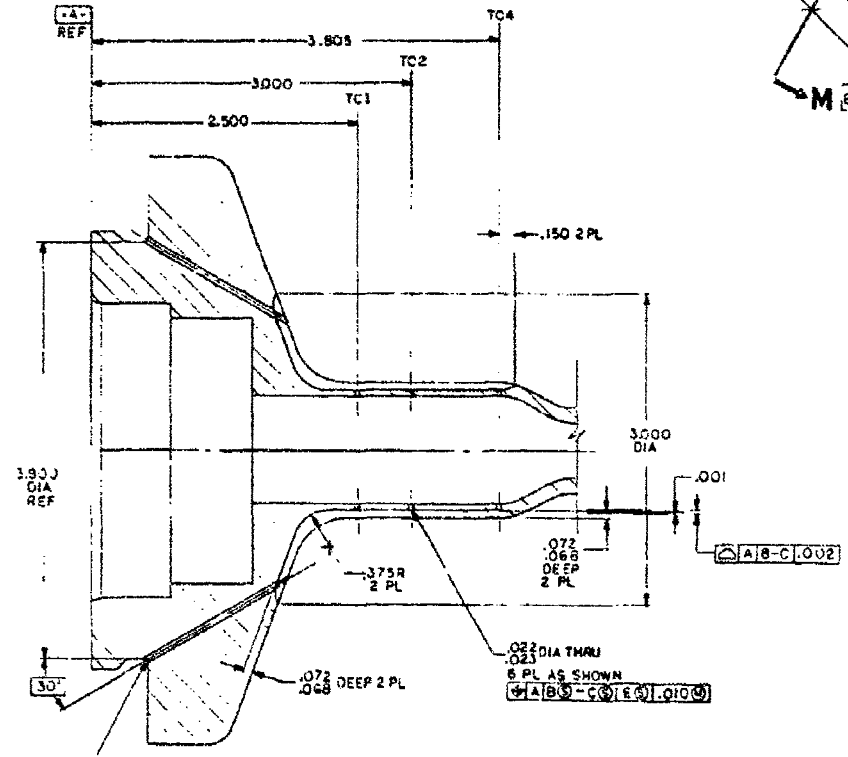

SECTION **M – M**

ITEMS ⑳ ㉓ REMOVED FOR CLARITY
INSTALL PER DETAIL P 6 PL
THERMOCOUPLE ROWS 'A' AND 'C' REF

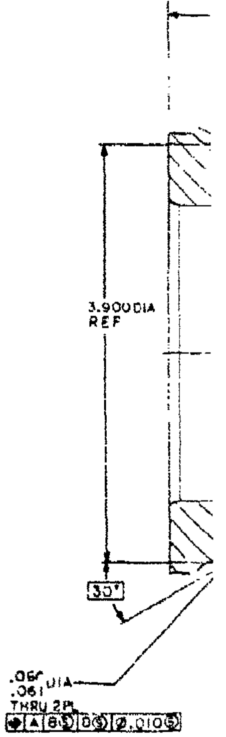

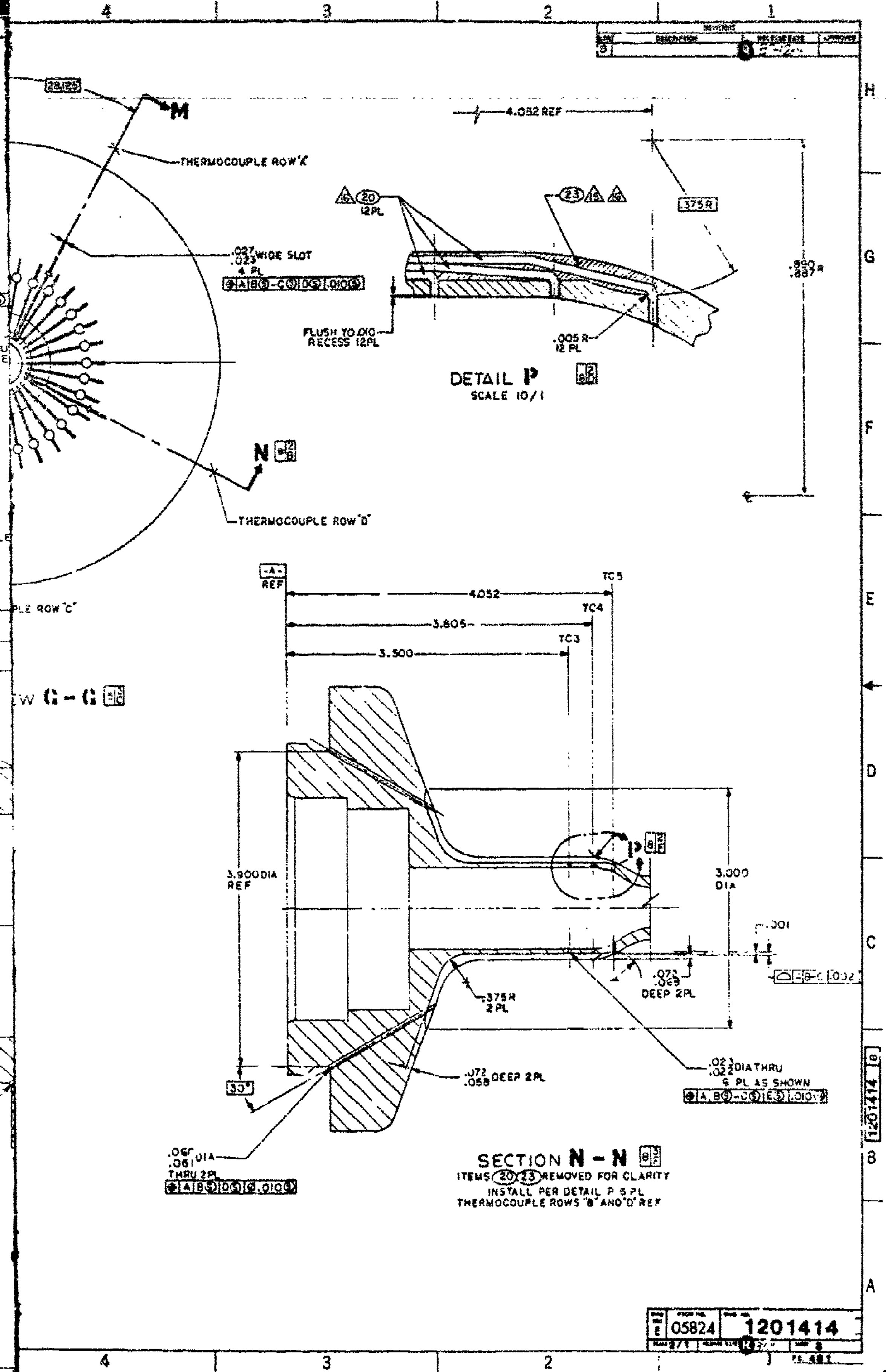
REVISIONS
SYM
DESCRIPTION
RELEASE DATE
APPROVED
B
28.125
M
THERMOCOUPLE ROW'A'
.027
.023 WIDE SLOT
4 PL
⊕|A|B(S)-C(S)|D(S)|.010(S)
N
THERMOCOUPLE ROW'D'
PLE ROW'C'
W G - G
4.052 REF
.375R
6 20
12PL
23 15 16
.890
.887 R
FLUSH TO .010
RECESS 12PL
.005 R
12 PL
DETAIL P
SCALE 10/1
-A-
REF
TC5
4.052
TC4
3.805
TC3
3.500
3.900 DIA
REF
P
3.000
DIA
.001
⌓|-B-C|.002
.072
.069
DEEP 2PL
.375R
2 PL
30°
.072
.068 DEEP 2PL
.023
.022 DIA THRU
6 PL AS SHOWN
⊕|A, B(S)-C(S)|E(S)|.010(S)
.065
.061 DIA
THRU 2PL
⊕|A|B(S)|D(S)|Ø.010(S)
SECTION N - N
ITEMS 20 23 REMOVED FOR CLARITY
INSTALL PER DETAIL P 6 PL
THERMOCOUPLE ROWS 'B' AND 'D' REF
H
G
F
E
D
C
B
A
4
3
2
1
1201414 B
SIZE
E
FSCM NO.
05824
DWG NO.
1201414
SCALE 2/1
SHEET 8
PG 481

NOTES:

1 INTERPRET DRAWING PER ATC-STD-4526.

2 PROTECTIVE CLOSURES ARE REQUIRED ON ALL PROPELLANT INLETS, INSTRUMENTATION PORTS, AND NOZZLE EXIT DURING HANDLING, SHIPPING AND STORAGE. REMOVE ONLY AS REQUIRED.

3 CONTAMINATION CRITICAL HARDWARE. COMPONENT CLEANLINESS REQUIREMENTS SHALL BE MAINTAINED THROUGHOUT ASSEMBLY PROCEDURE.

4 MILLIPORE FILTERS (FSCM NO. 05071) RATED AT 200 MICRONS ABSOLUTE, OR LOWER, SHALL BE USED WHEN FLOWING ANY FLUIDS THROUGH THE HARDWARE.

△5 APPLY A THIN FILM OF (21) LUBRICANT (MS-122) TO ALL SCREW THREADS PRIOR TO ASSEMBLY PER ATC-STD-4851.

△6 TORQUE VALUES ARE TOTAL. TORQUE INFORMATION PER ATC-STD-4439.

△7 TORQUE SEQUENCE FOR A GIVEN BOLT PATTERN SHALL BE PER ASD 5226.

8 REFERENCED INSTRUMENTATION TYPE AND LOCATION IS DEFINED ON DRAWINGS FOR (1) CHAMBER AND (2) INJECTOR. ADDITIONAL THERMOCOUPLE INSTRUMENTATION TO BE ADDED TO (1) PER COGNIZANT ENGINEER.

△9 REQUIRED FLOW BALANCING WASHERS (DRAWING 1201420) SHALL BE SELECTED AND RECORDED BY THE COGNIZANT ENGINEER SUBSEQUENT TO COLD FLOW CALIBRATION TESTS PER DRAWING 1201419, NOTE 10.

10 PROOF AND LEAK TESTS: THE THRUST CHAMBER ASSEMBLY SHALL BE SUBJECTED TO PROOF AND LEAK TESTS AS FOLLOWS:

- A. PROOF TEST - USING CLEAN DRY $GN_2$, PRESSURIZE THE THRUST CHAMBER ASSEMBLY USING A SUITABLE THROAT PLUG TO 225 ± 25 PSIG FOR 5 MINUTES MINIMUM.
- B. LEAK TEST - USING CLEAN DRY $GN_2$, PRESSURIZE THE THRUST CHAMBER ASSEMBLY TO 125 ± 10 PSIG FOR 5 MINUTES MINIMUM. THERE SHALL BE NO EVIDENCE OF LEAKAGE GREATER THAN $1 \times 10^{-3}$ SCCS ALLOWED.

11 MARK PER AS478-35C WITH 1201415, APPLICABLE DASH NO. AND AEROJET TECHSYSTEMS COMPANY (ATC) ASSIGNED SERIAL NO.

DEVELOPMENT HARDWARE

FOR TEST OR EXPERIMENTATION

| | | | |
|---|---|---|---|
| A | SEE A DCN | 12-9-15 | |

| △5 | | | | | | |
|---|---|---|---|---|---|---|
| | AR | | | LUBE | ATC-44159 | 21 |
| | 1 | 93768 | 402-2103 | THERMO-COUPLE | TYPE 88 ASSY GROUNDED JUNCTION | 20 |
| | | | | | | 19 |
| | | | | | | 18 |
| | 1 | 05939 | 480240890 | SEAL ASSY | | 17 |
| | 1 | | AS 3040E1 -906 | O-RING | | 16 |
| | 1 | | AS 3040E1 -904 | O-RING | | 15 |
| | 1 | | AN924-8S | NUT, BULKHEAD | | 14 |
| | 1 | | AN815-4S | UNION | | 13 |
| | 14 | | NAS 620 C10L | WASHER, FLAT | | 12 |
| | 6 | | NAS 1351 N3-24 | SCREW, CAP | | 11 |
| | 8 | | NAS 1351 N3-20 | SCREW, CAP | | 10 |
| | | | | | | 9 |
| | 1 | | 1201424-2 | RING | | 8 |
| | 1 | | 1201424-1 | THRUST PLATE | | 7 |
| | 2 | | 1201423-1 | VALVE PROPELLANT | | 6 |
| | 1 | | 1201422-9 | IGNITER, SPARK | | 5 |
| | 1 | | △9 | WASHER FLOW BALANCE | (1201420) | 4 |
| | 1 | | 1201419-1 | SLEEVE, IGNITER | | 3 |
| | 1 | | 1201418-1 | INJECTOR ASSY | | 2 |
| | 1 | | 1201414-9 | CHAMBER ASSY | | 1 |
| | -9 | [illegible] | PART OR IDENTIFYING NO. | NOMENCLATURE OR DESCRIPTION | MATERIAL SPECIFICATION | ITEM NO. |

1201416 A

CONTRACT NAS 3-24398

DRAWN A. GRAY

DO NOT SCALE DRAWING

1

AEROJET TechSystems COMPANY

THRUST CHAMBER ASSEMBLY

E 05824 1201415

2/1 1 OF 3

**DEVELOPMENT HARDWARE**

FOR TEST OR EXPERIMENTATION

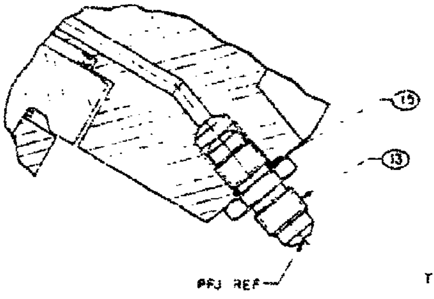

SECTION C-C

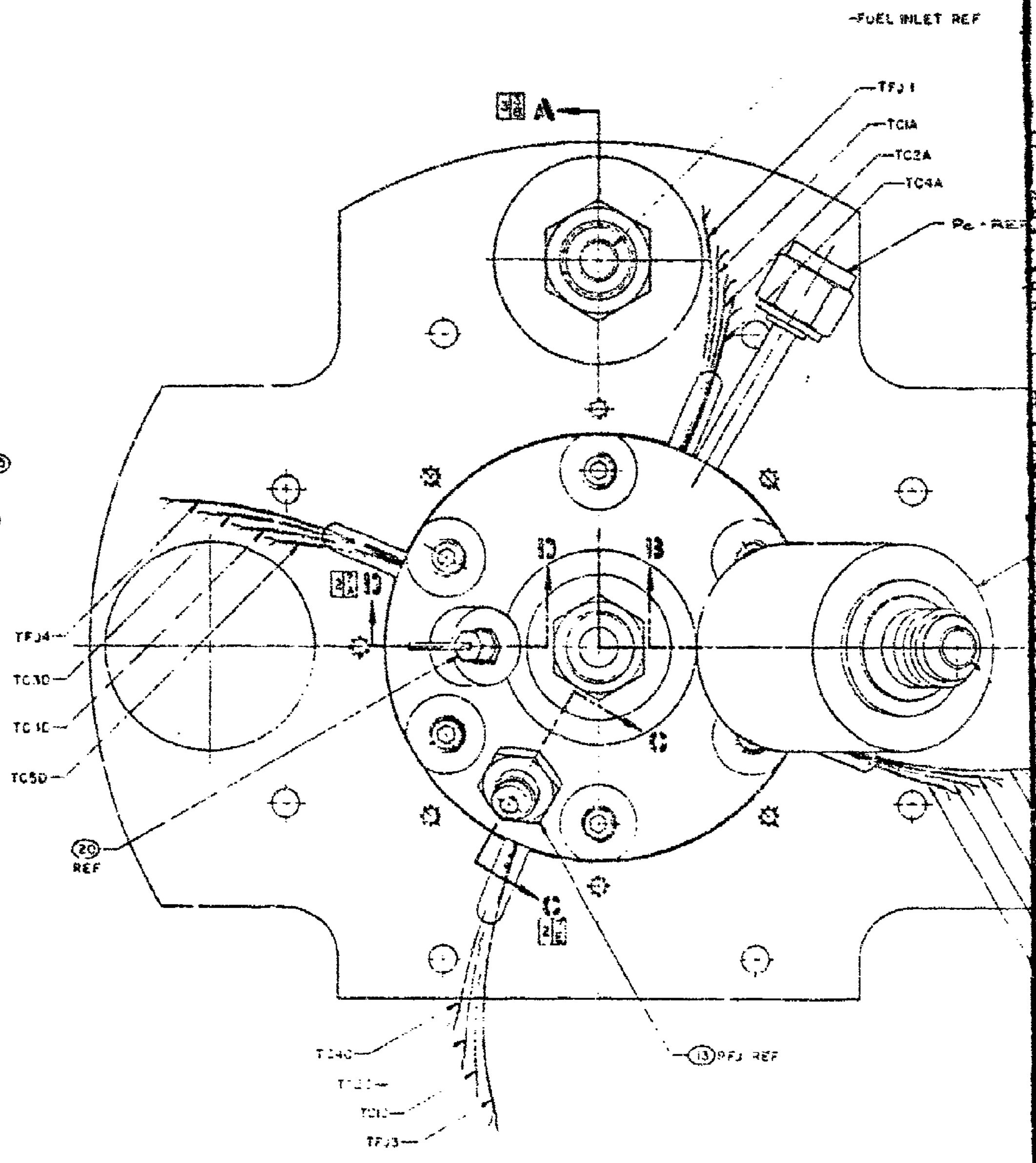

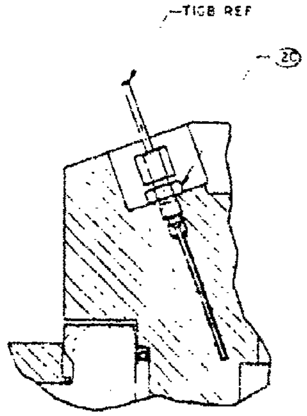

SECTION D-D

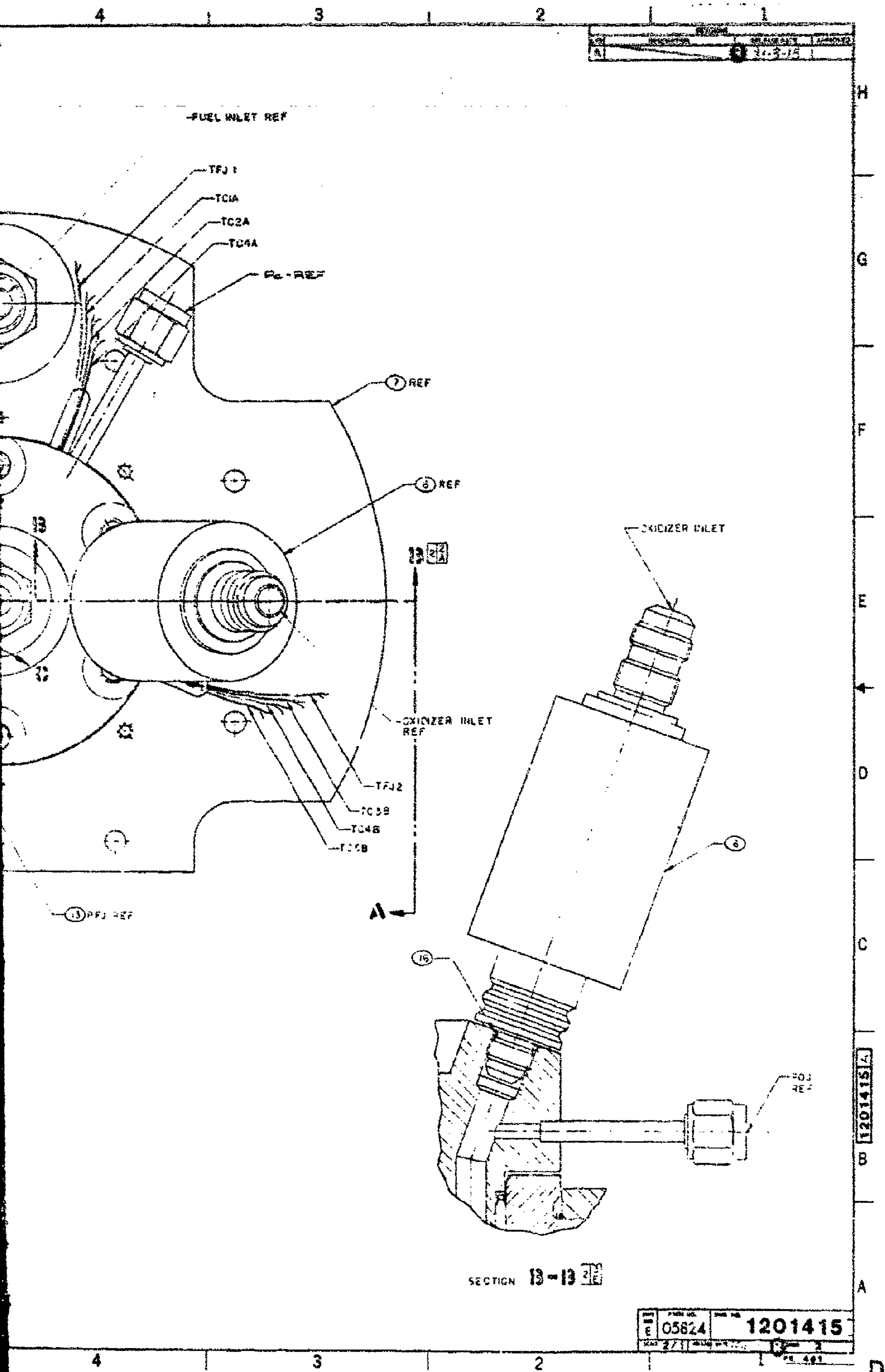
4
3
2
1
REVISIONS
LTR
DESCRIPTION
RELEASE DATE
APPROVED
A
11-3-75
H
G
F
E
D
C
B
A
FUEL INLET REF
TFJ 1
TC1A
TC2A
TC4A
Pc - REF
⑦ REF
⑥ REF
B
B 2/2 A
OXIDIZER INLET
OXIDIZER INLET REF
TFJ2
TC3B
TC4B
TC5B
⑬ PFJ REF
A
⑥
⑯
POJ REF
SECTION B - B 2/2 E
1201415 A
E
05824
1201415
SCALE 2/1
SHEET 2
PG. 401

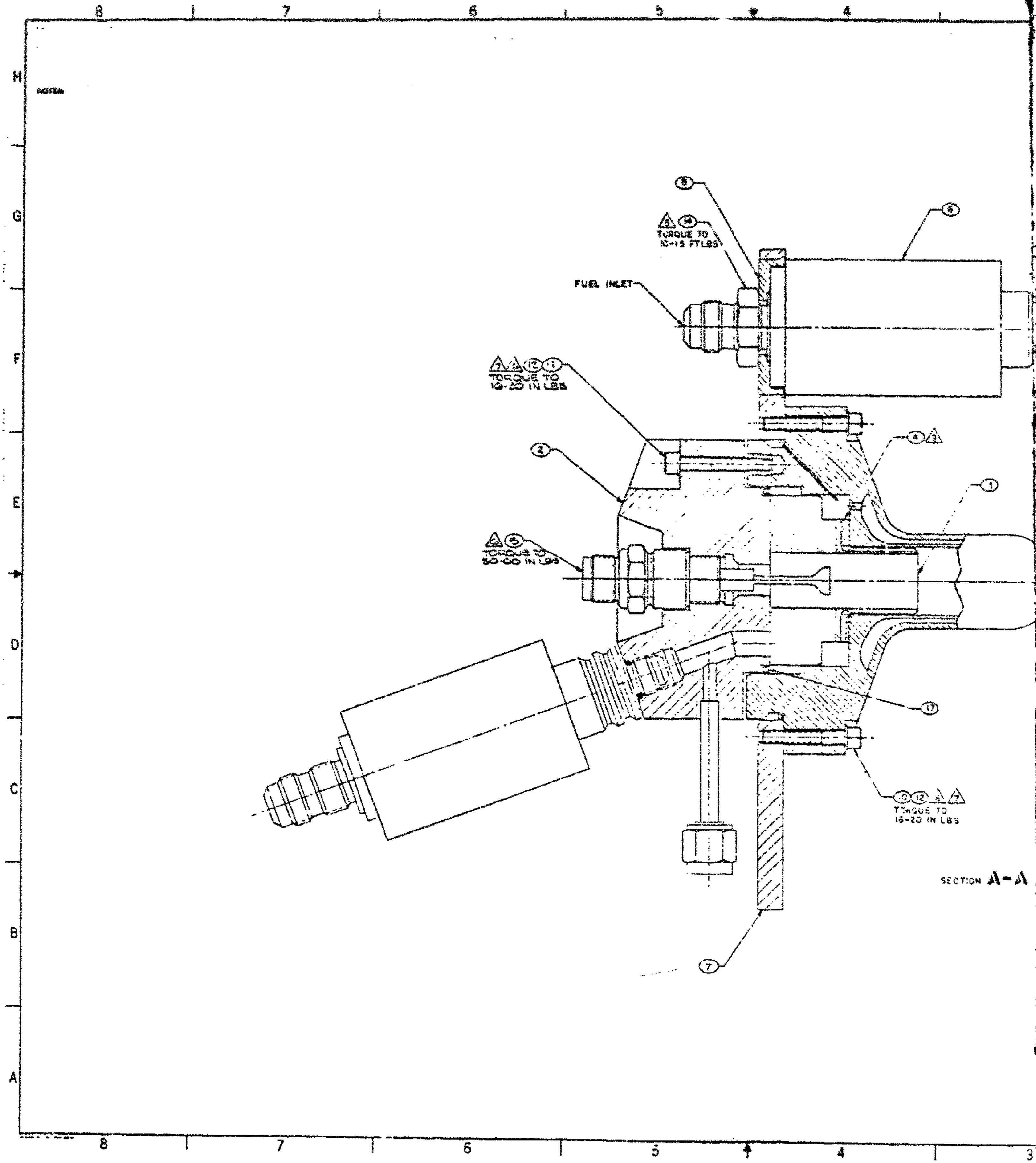
8
7
6
5
4
H
G
F
E
D
C
B
A
NOTES
⑧
⑥
△5 ⑭
TORQUE TO
10-15 FT LBS
FUEL INLET
△7 △5 ⑫ ⑪
TORQUE TO
16-20 IN LBS
② 
④ △3
①
△5 ⑮
TORQUE TO
50-60 IN LBS
⑰
⑩ ⑫ △5 △7
TORQUE TO
16-20 IN LBS
SECTION A-A
⑦
3

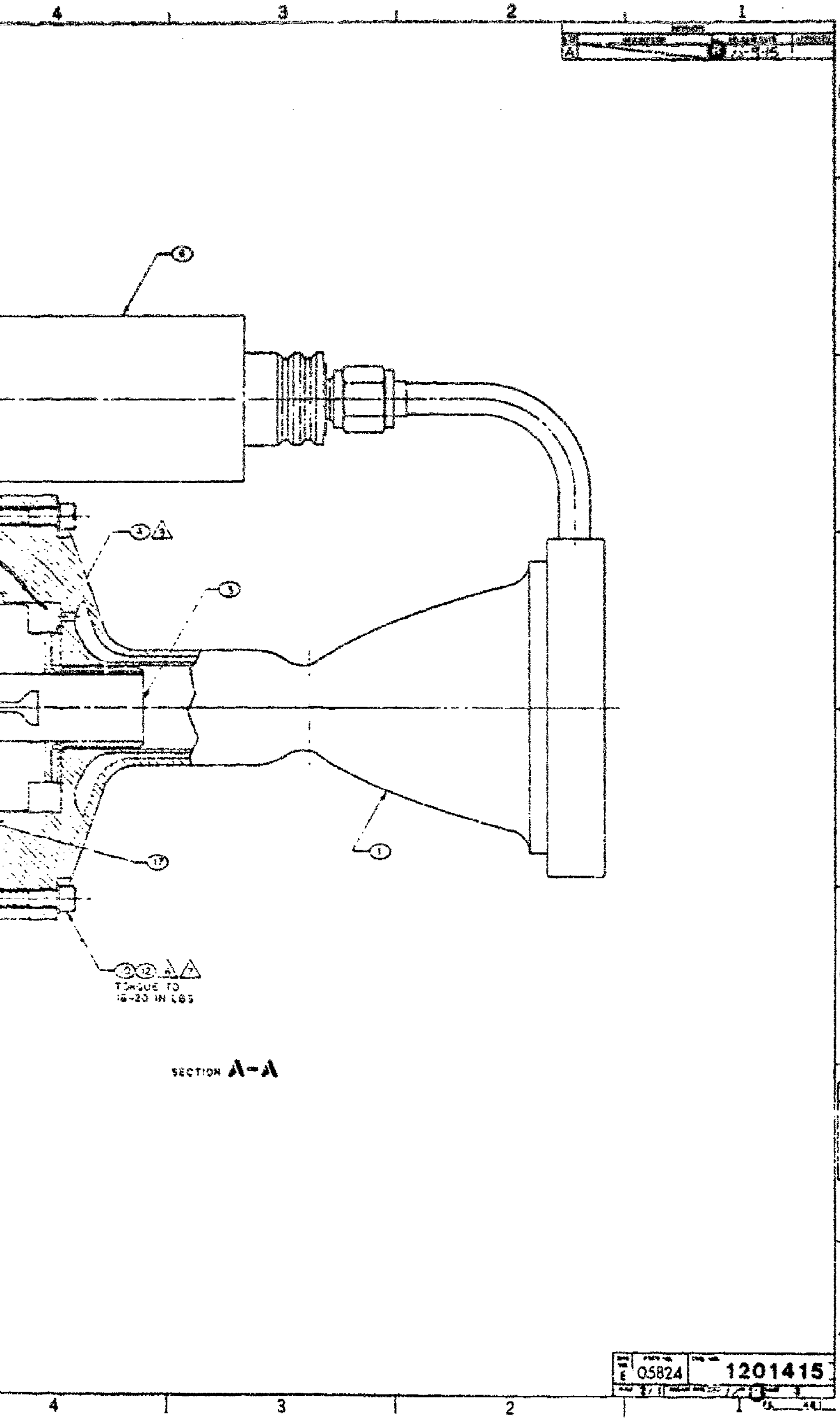
4
3
2
1
H
G
F
E
D
C
B
A
A
6
4
3
5
1
17
9
12
6
7
TORQUE TO
16-20 IN LBS
SECTION A-A
1201415 A
E
05824
1201415

NOTES:

1. INTERPRET DRAWING PER ATC-STD-4520.
2. ALL DIAMETERS ⌖ .010 Ⓢ A B Ⓢ UNLESS OTHERWISE NOTED.
3. MARK PER A3473-7, WITH INFORMATION SHOWN. [illegible] INLS. PORTS AS SHOWN.
4. MARK PER [illegible] WITH [illegible] AND APPLICABLE DASH NUMBER.
5. PENETRANT INSPECT MACHINED SURFACES PER ATC-STD-4042, TYPE I, METHOD B. ACCEPTANCE CRITERIA PER ATC-STD-5008, CLASS [illegible] UNLESS OTHERWISE NOTED.

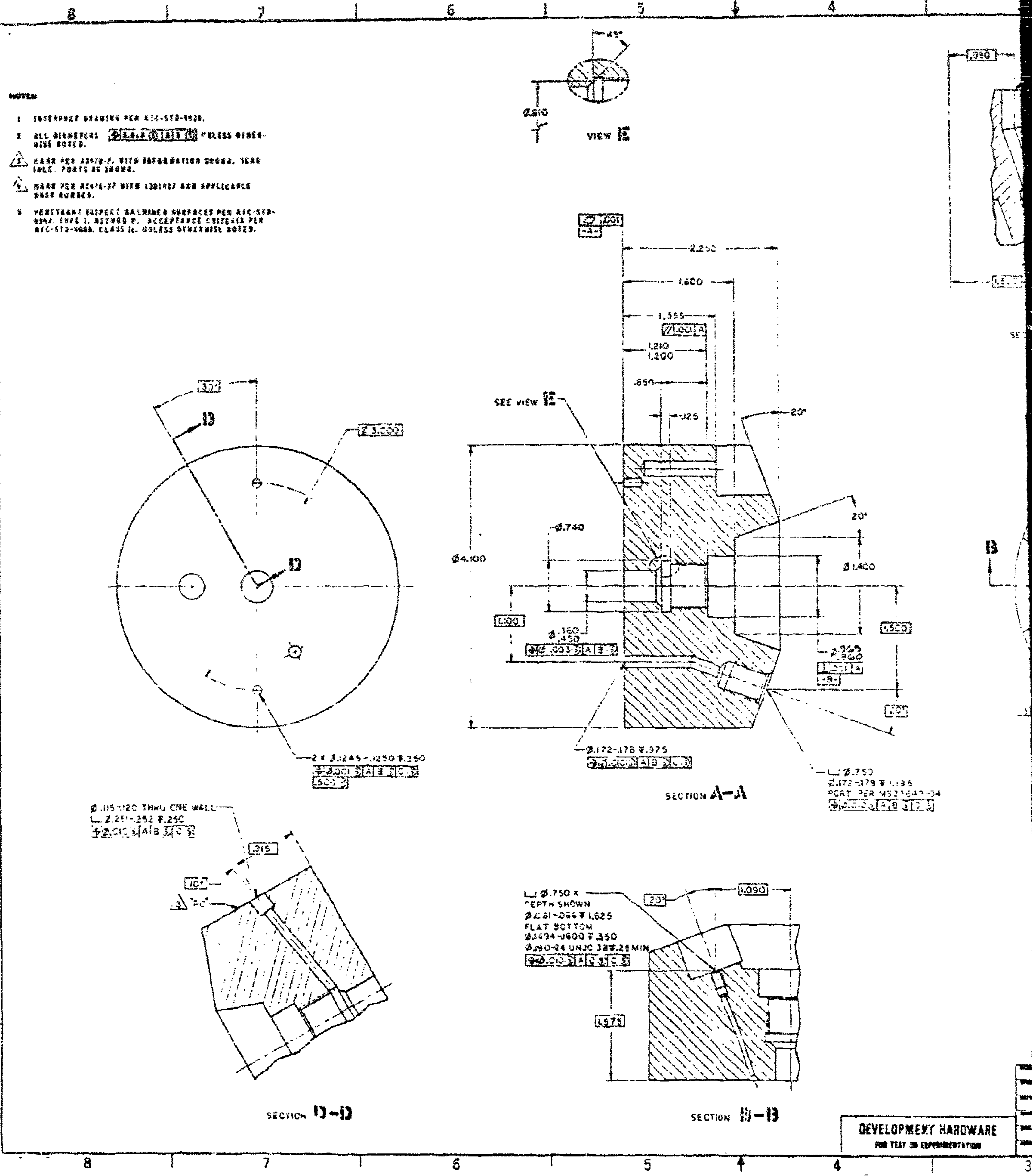

DEVELOPMENT HARDWARE
FOR TEST OR EXPERIMENTATION

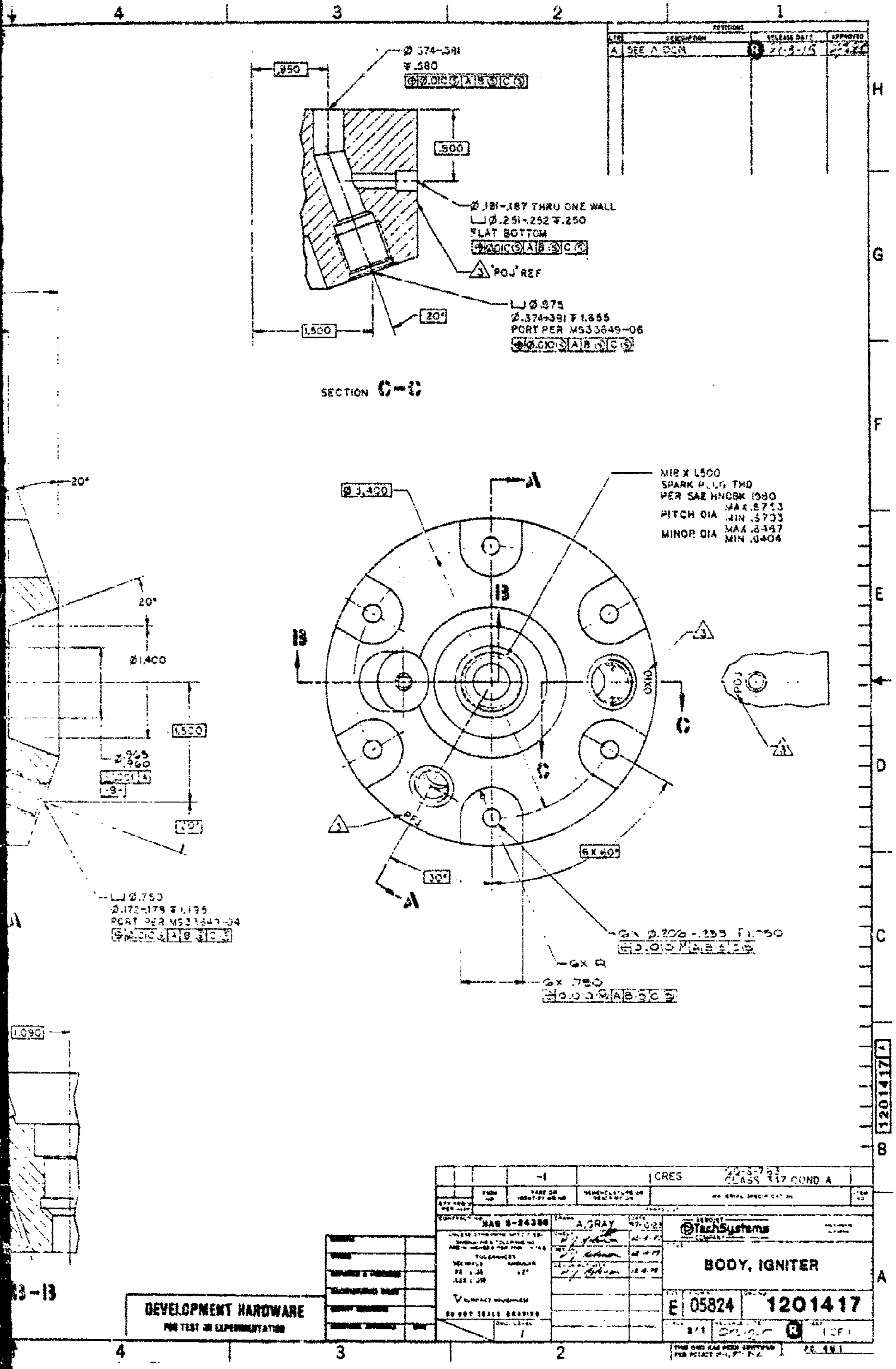
SECTION C-C
Ø .374-.381
⌴ .580
.950
.900
Ø .181-.187 THRU ONE WALL
⌴ Ø .251-.252 ⌴ .250
FLAT BOTTOM
'POJ' REF
⌴ Ø .875
Ø .374-.381 ⌴ 1.655
PORT PER MS33649-06
20°
1.500
M18 X 1.500
SPARK PLUG THD
PER SAE HNDBK 1980
PITCH DIA MAX .8753 MIN .8733
MINOR DIA MAX .8457 MIN .8404
Ø 3.400
A
B
C
OXO
POJ
6X 60°
30°
6X Ø.206-.233
6X R
6X .750
20°
Ø 1.400
1.500
1.090
⌴ Ø .750
Ø .172-.179 ⌴ 1.195
PORT PER MS33649-04
CRES
CLASS 317 COND A
NAS 9-24386
A. GRAY
BODY, IGNITER
E
05824
1201417
1 OF 1
Thiokol TechSystems
DEVELOPMENT HARDWARE
FOR TEST OR EXPERIMENTATION
SEE A DCN
4
3
2
1
H
G
F
E
D
C
B
A

NOTES:

1 INTERPRET DRAWING PER ATC-STD-4025.

2 DRY HYDROGEN OR VACUUM BRAZE PER COGNIZANT ENGINEER, USING (24) POWDER.

3 ALL DIAMETERS [⌖ Ø.010 Ⓜ | A Ⓜ | B] UNLESS OTHERWISE NOTED.

4 CONTAMINATION CRITICAL HARDWARE.
CLEANLINESS PER ATC-4635B, LEVEL E, EXCEPT PARTICLE SIZE AND NVR LIMITS PER ATC-STD-4980, LEVEL 400D INTERNAL, AND LEVEL VC EXTERNAL. SSA IS 1.0 SQ FT.
NOTE: LOX CLEANING PER ATC-4635B TO BE PERFORMED SUBSEQUENT TO FLOW CALIBRATION TESTS OF NOTE 14.

5 PROTECTIVE CLOSURES ARE REQUIRED TO PROTECT INTERNAL PASSAGES DURING HANDLING, SHIPPING AND STORAGE. REMOVE ONLY AS REQUIRED.

6 ALL DIMENSIONS APPLY AFTER BRAZING, UNLESS OTHERWISE INDICATED.

7 FINAL MACHINE AFTER PROOF AND LEAK TESTING PER NOTE 8.

8 PROOF AND LEAK TESTS: THE INTEGRAL IGNITER INJECTOR ASSEMBLY SHALL BE SUBJECTED TO PROOF AND LEAK TESTS, PRIOR TO FINAL MACHINING PER NOTE 7, AS FOLLOWS:

A. PROOF TEST: USING CLEAN, DRY GN2, SIMULTANEOUSLY PRESSURIZE THE FUEL AND OXIDIZER CIRCUITS TO 110 ± 10 PSIG FOR 3 MINUTES MINIMUM. THERE SHALL BE NO EVIDENCE OF PERMANENT DEFORMATION OR FAILURE.

B. EXTERNAL LEAK TEST: USING CLEAN, DRY GN2, SIMULTANEOUSLY PRESSURIZE THE FUEL AND OXIDIZER CIRCUITS TO 50 ± 5 PSIG FOR 5 MINUTES MINIMUM. THERE SHALL BE NO LEAKAGE GREATER THAN 1 x 10-3 SCCS ALLOWED.

9 USE MS9390-228, 2 PLACES, FOR ALIGNING AND BRAZING DIFFUSION BONDED PLATELET STACK TO IGNITER BODY (20) PER NOTE 12. REMOVE AFTER BRAZING OR DURING FINAL MACHINING.

10 ALTER AS SHOWN.

11 NICKEL STRIKE PLATELETS, USING (23), STACK PLATELETS PER STACKING SEQUENCE (VIEW A AND TABLE), AND DIFFUSION BOND PLATELET STACK ASSEMBLY PER COGNIZANT ENGINEER.

12 DRY HYDROGEN OR VACUUM BRAZE DIFFUSION BONDED PLATELET STACK ASSEMBLY (5) OF NOTE 11 TO IGNITER BODY (20), USING (21) FOIL.

13 MIX PARTS "A" AND "B" OF (23) PER MANUFACTURER'S INSTRUCTIONS TO OBTAIN PROPER ELECTROLESS NICKEL SOLUTION. MANUFACTURER IS ARONEY LABS, INC., 2250-T [illegible], COMPTON, CA 90220.

14 FLOW CALIBRATION TEST: EACH CIRCUIT OF THE INTEGRAL IGNITER INJECTOR ASSEMBLY SHALL BE FLOW TESTED AS FOLLOWS:

A. FUEL CIRCUIT: USING CLEAN, DRY GN2, P/N 1201419-9, P/N 1201422-1 THRU -16, ROTAMETER, P/N 1201421-3, FLOW TO ATMOSPHERIC PRESSURE AT INLET PRESSURES RANGING FROM 1.0 TO 15.00 PSIG, USING 1.0 PSIG INCREMENTS. FOR EACH DATA POINT, RECORD THE INLET PRESSURE, MANIFOLD PRESSURE, GN2 FLOW RATE, NOMINAL GN2 FLOW TEMPERATURE, AND GN2 FLOW SPLIT FOR P/N 1201420-1 THRU -16.

B. OXIDIZER CIRCUIT: USING CLEAN, DRY GN2, FLOW TO ATMOSPHERIC PRESSURE AT INLET PRESSURE RANGING FROM 1.0 TO 15.0 PSIG, USING 1.0 PSIG INCREMENTS. FOR EACH DATA POINT, RECORD THE INLET PRESSURE, GN2 FLOW RATE, AND NOMINAL GN2 FLOW TEMPERATURE.

15 MILLIPORE FILTERS RATED AT 400 MICRONS ABSOLUTE, OR LOWER, SHALL BE USED WHEN FLOWING ANY FLUID THROUGH THE INTEGRAL IGNITER INJECTOR ASSEMBLY.

16 MARK PER AS478-7 WITH 1201410, APPLICABLE DASH NO. AND AEROJET TECHSYSTEMS COMPANY (ATC) ASSIGNED SERIAL NO.

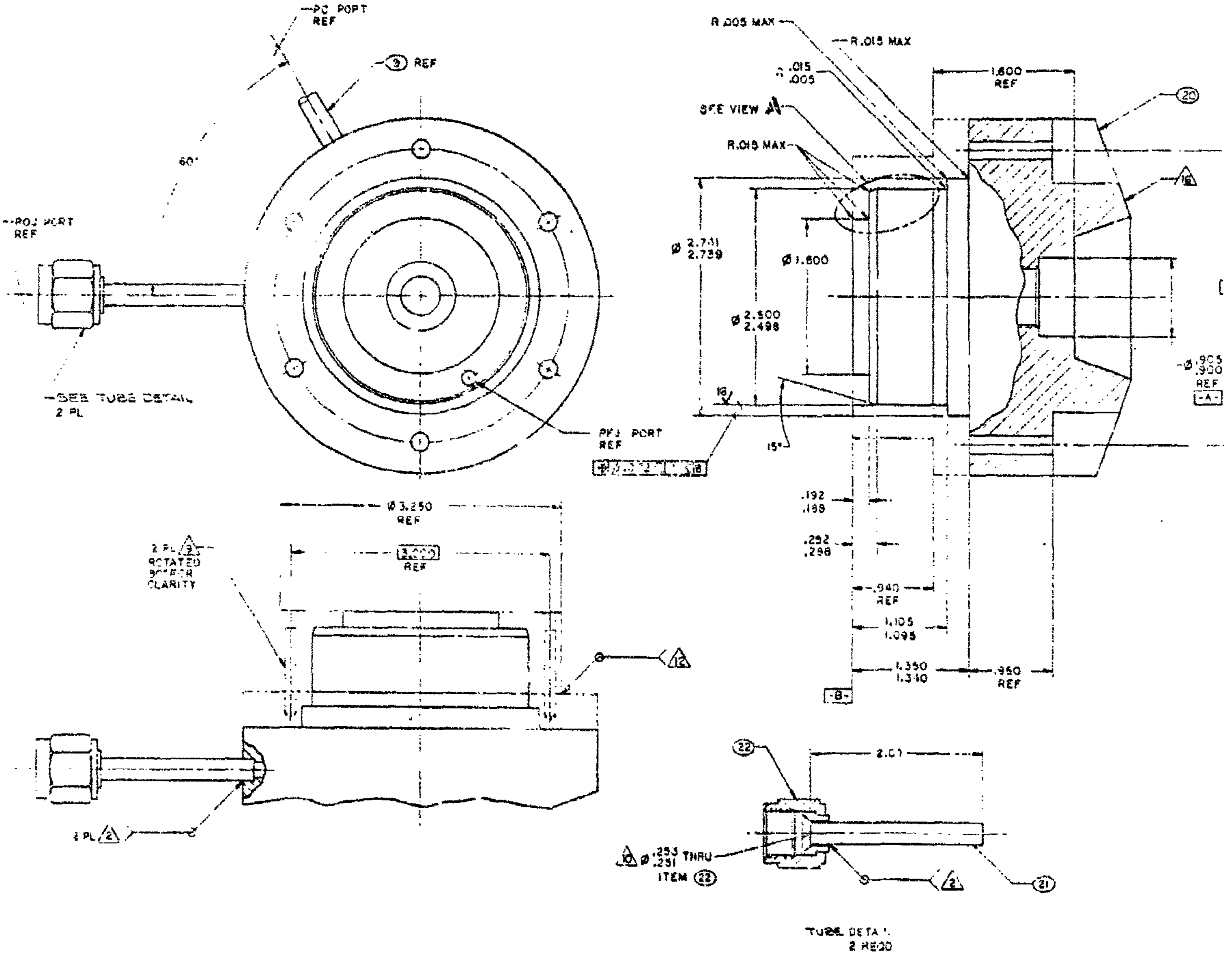

DEVELOPMENT HARDWARE
FOR TEST OR EXPERIMENTATION

N TEST, EACH CIRCUIT OF THE INTEGRAL ASSEMBLY SHALL BE FLOW TESTED AS

ING CLEAN, DRY GN2, P/N 1201415-5, P/N US, ROTAMETER, P/N1201421-5. FLOW TO ATMOSPHERIC PRESSURES RANGING FROM 1.0 TO 15.00 PSIG. INCREMENTS. FOR EACH DATA POINT, RECORD THE MANIFOLD PRESSURE, GN2 FLOW RATE, NOMINAL GN2 AND GN2 FL. SPLIT FOR P/N 1201420-1 THRU

CUIT, USING CLEAN, DRY GN2, FLOW TO PRESSURE AT INLET PRESSURE RANGING 5.0 PSIG, USING 1.0 PSIG INCREMENTS. A POINT, RECORD THE INLET PRESSURE, E, AND NOMINAL GN2 FLOW TEMPERATURE.

S RATED AT 400 MICRONS ABSOLUTE. BE USED WHEN FLOWING ANY FLUID GRAL IGNITER INJECTOR ASSEMBLY.

WITH 1201418, APPLICABLE DASH NO. SYSTEMS COMPANY (ATC) ASSIGNED

| REVISIONS | | | |
|---|---|---|---|
| LTR | DESCRIPTION | RELEASE DATE | APPROVED |
| A | SEE A DCN | 11-3-75 | |

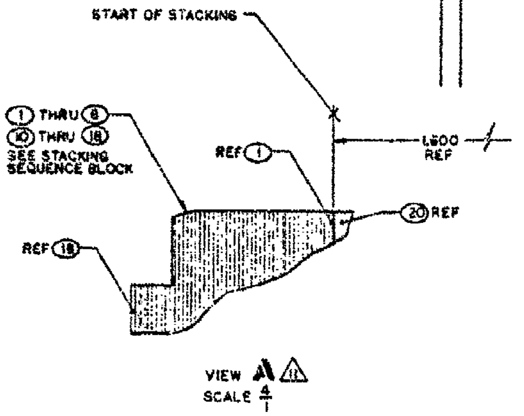

VIEW A ⚠11
SCALE 4/1

| STACKING SEQUENCE | |
|---|---|
| ITEM NO. | QTY REQD |
| 1 | 1 |
| 2 | 10 |
| 3 | 1 |
| 4 | 1 |
| 6 | 1 |
| 5 | 1 |
| 8 | 1 |
| 7 | 1 |
| 6 | 1 |
| 5 | 1 |
| 8 | 1 |
| 7 | 1 |
| 6 | 1 |
| 5 | 1 |
| 8 | 1 |
| 7 | 1 |
| 6 | 1 |
| 5 | 1 |
| 8 | 1 |
| 7 | 1 |
| 6 | 1 |
| 10 | 1 |
| 11 | 1 |
| 12 | 4 |
| 13 | 3 |
| 14 | 1 |
| 15 | 1 |
| 14 | 1 |
| 15 | 1 |
| 14 | 1 |
| 16 | 1 |
| 17 | 3 |
| 18 | 2 |

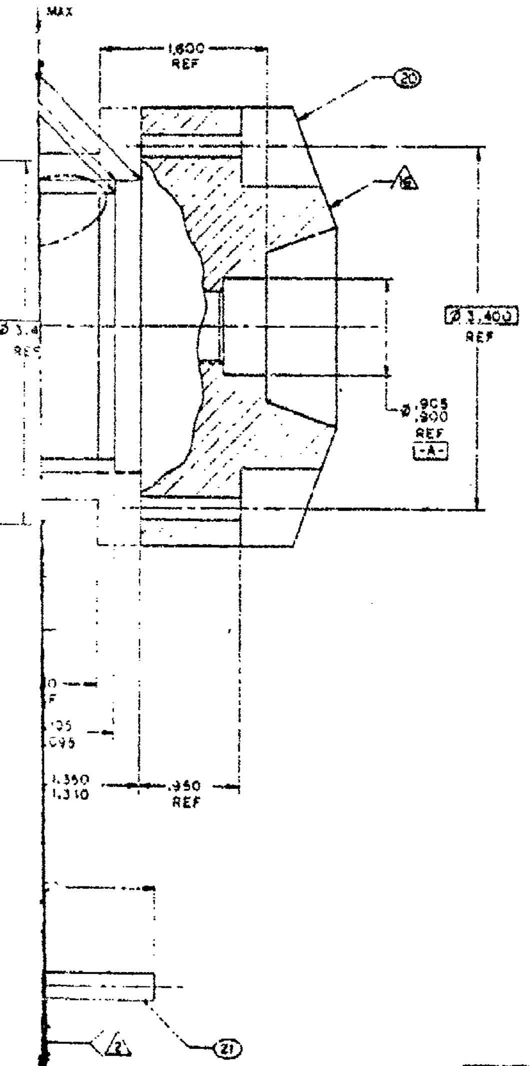

| | | | | | | | |
|---|---|---|---|---|---|---|---|
| ⚠12 ⚠2 | AR | | | | BRAZE ALLOY | FOIL .001 THK AND .020 DIA WIRE PER AMS 4787 | 24 |
| ⚠13 ⚠11 | | AR | | | BRAZE ALLOY | ANSNET LABS NO. 24 ELECTROLESS NICKEL | 23 |
| | 2 | | | -22 | CAP ASSY | ALTER FROM AN929-6S | 22 |
| | 2 | | | -21 | TUBE | .250 O.D. x .035 WALL TUBING CRES 347 PER AMS5556 TYPE I | 21 |
| ⚠12 ⚠9 | | | | 1201417-1 | BODY IGNITER | | 20 |
| | | | | | | | 19 |
| | | 2 | | 1201416-18 | PLATELET | BOTTOM | 18 |
| | | 3 | | -17 | | GH2 INJECTION | 17 |
| | | 1 | | -16 | | GH2 INNER MANF | 16 |
| | | 2 | | -15 | | GH2 FILTER | 15 |
| | | 3 | | -14 | | GH2 SPACER | 14 |
| | | 3 | | -13 | | SEPARATOR | 13 |
| | | 4 | | -12 | | GO2 INJECTION | 12 |
| | | 1 | | -11 | | GO2 INNER MANF | 11 |
| | | 1 | | 1201416-10 | PLATELET | GO2 INNER MANF | 10 |
| | 1 | | | -9 | PLATELET ASSY | | 9 |
| | | 4 | | 1201416-8 | PLATELET | GO2 SPACER | 8 |
| | | 4 | | -7 | | GO2 FILTER | 7 |
| | | 5 | | -6 | | GO2 SPACER | 6 |
| | | 4 | | -5 | | GO2 FILTER | 5 |
| | | 1 | | -4 | | GO2 REINFORCING | 4 |
| | | 1 | | -3 | | GO2 METERING | 3 |
| | | 10 | | -2 | | GO2 DISTRIBUTION | 2 |
| | | 1 | | 1201416-1 | PLATELET | GO2 INLET | 1 |
| | -1 | -2 | FSCM NO. | PART OR IDENTIFYING NO. | NOMENCLATURE OR DESCRIPTION | MATERIAL SPECIFICATION | ITEM NO. |
| | QTY REQD PER ASSY | | | | | | |

PARTS LIST

CONTRACT NO. NAS 3-24343-8

DRAWN A. GRAY

DO NOT SCALE DRAWING

AEROJET TECHSYSTEMS COMPANY

**INTEGRAL IGNITER INJECTOR ASSEMBLY**

| SIZE | CODE IDENT NO. | DWG NO. |
|---|---|---|
| E | 05824 | 1201418 |

SCALE 2/1 SHEET 1 OF 1

1201418 A

**DEVELOPMENT HARDWARE**
FOR TEST OR EXPERIMENTATION

NOTES:

1. INTERPRET DRAWING PER ATC-STD-4026.
2. MATCH MACHINE DIAMETER TO MATING DIAMETER WITHIN .001 TO .002 DIAMETRICAL CLEARANCE FIT.
3. DRY HYDROGEN OR VACUUM BRAZE PER COGNIZANT ENGINEER, USING ③ PRIOR TO FINAL MACHINING.
4. MARK PER AS478-37 WITH 1201469 AND APPLICABLE DASH NUMBER.

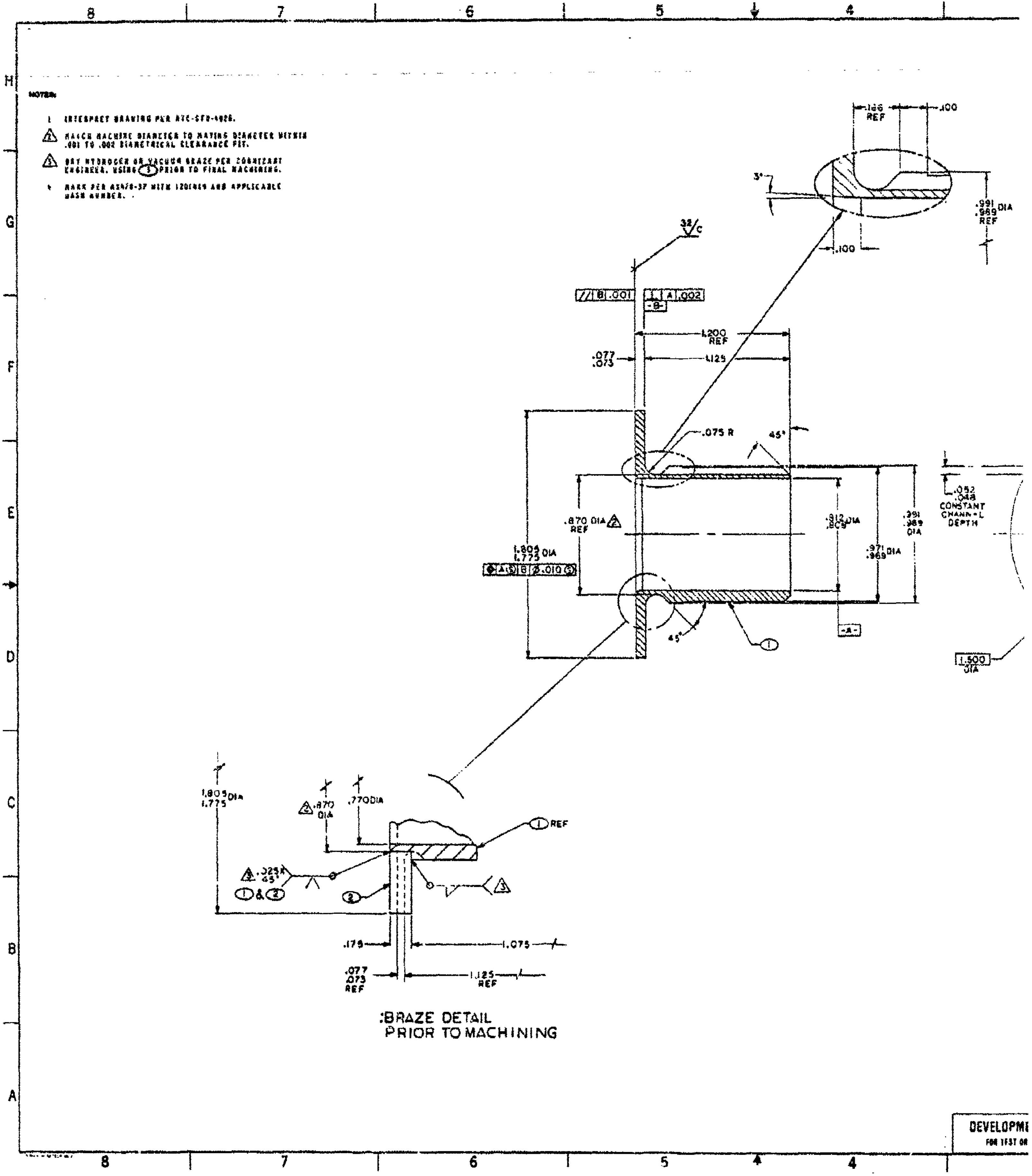

BRAZE DETAIL
PRIOR TO MACHINING

DEVELOPM
FOR TEST OR

| | | | |
|---|---|---|---|
| A | SEE A DCN | 22-1-27 | |

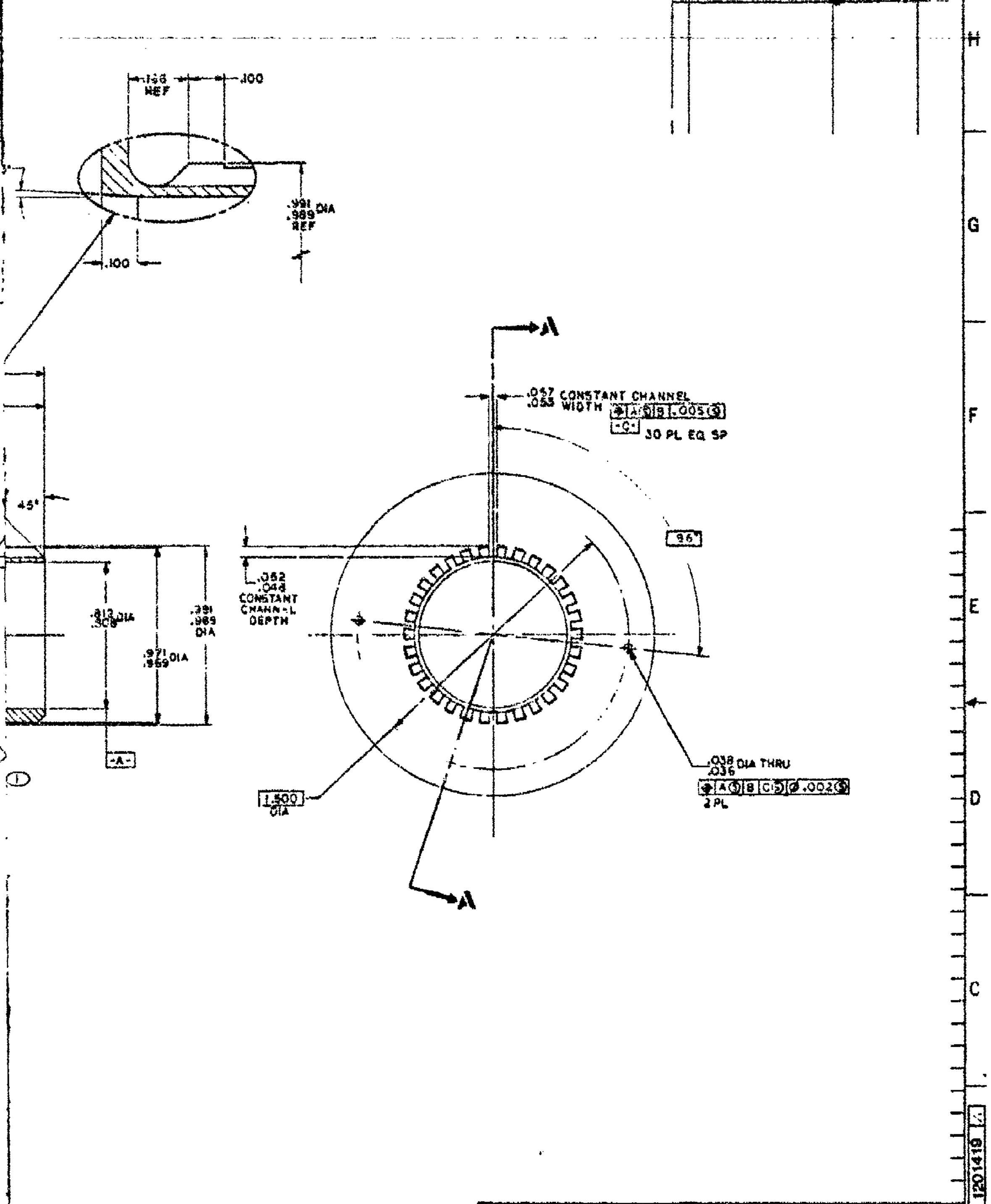

| | | | | | |
|---|---|---|---|---|---|
| A/R | | | BRAZE FILLER MATERIAL | .030 DIA WIRE PER AMS 4777 | 3 |
| 1 | | -2 | FLANGE | NICKEL UNS N02200 OR LOW-CARBON NICKEL UNS N02201 PER ASTM B-160 | 2 |
| 1 | | -1 | BARREL | | 1 |

NAS 3-24396

BASHNE 7/7/22

Aerojet TechSystems Company

IGNITER SLEEVE ASSEMBLY

E 05824 1201419

4/1

1 OF 1

**DEVELOPMENT HARDWARE**

FOR TEST OR EXPERIMENTATION

NOTES:

1. INTERPRET DRAWING PER ATC-STD-4025.
2. CLEANLINESS PER ATC-STD-4050, LEVEL 500.
3. MARK PER AS478-37 WITH 1201420, APPLICABLE DASH NO. AND AEROJET TECHSYSTEMS COMPANY (ATC) ASSIGNED SERIAL NO.

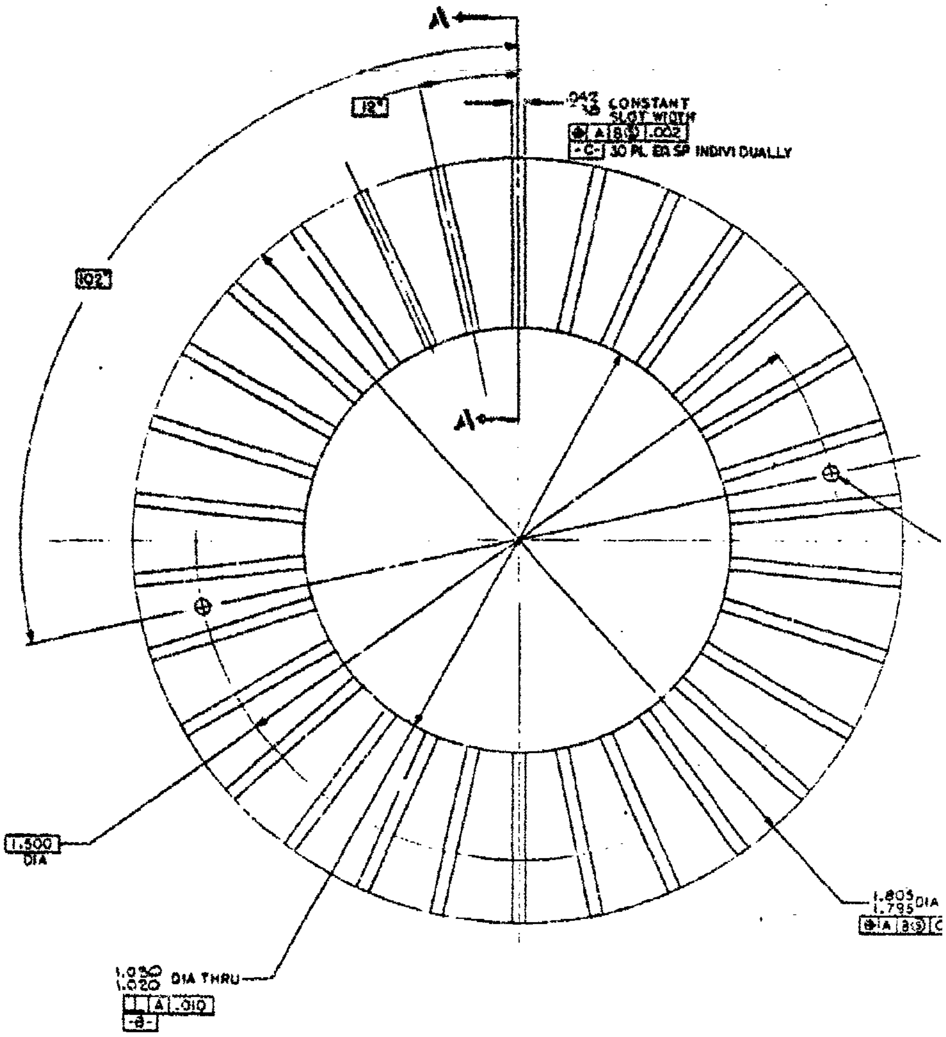

| | |
|---|---|
| -16 | .085 |
| -15 | .071 |
| -14 | .060 |
| -13 | .052 |
| -12 | .048 |
| -11 | .044 |
| -10 | .010 |
| -8 | .036 |
| -7 | .034 |
| -6 | .032 |
| -5 | .028 |
| -4 | .026 |
| -3 | .024 |
| -2 | .022 |
| -1 | .000 |
| DASH NO | D SLOT DEPTH ±.0026 |

DEVELOPMEN

FOR TEST OR EX

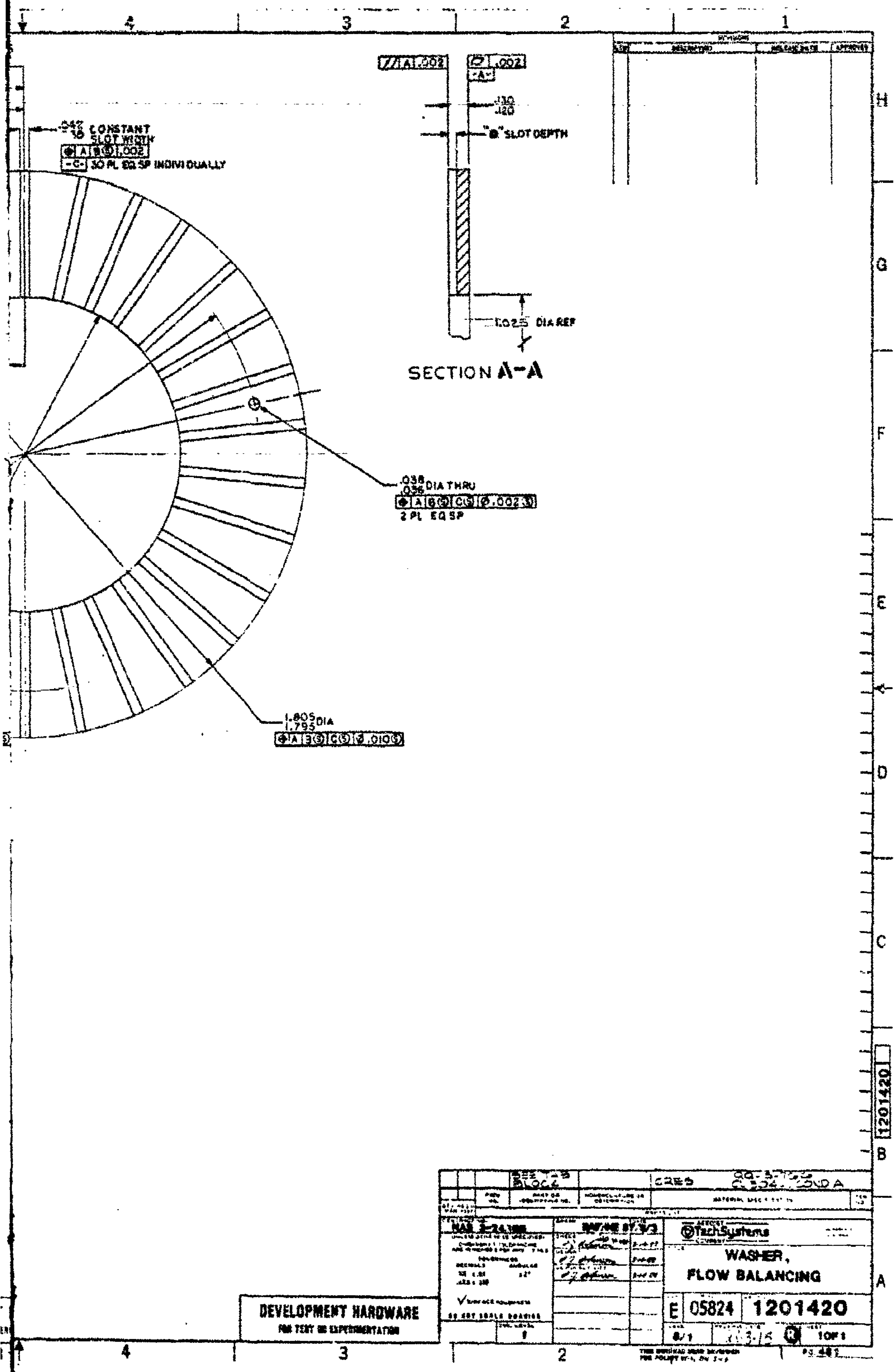
.047 .030 CONSTANT SLOT WIDTH
A B .002
-C- 30 PL EQ SP INDIVIDUALLY
// A .002
.002
-A-
.130 .120
"B" SLOT DEPTH
1.025 DIA REF
SECTION A-A
.038 .036 DIA THRU
A B C Ø.002
2 PL EQ SP
1.805 1.795 DIA
A B C Ø.010
SEE TAB BLOCK
CRES
QQ-S-763 COND A
WASHER,
FLOW BALANCING
TechSystems
E
05824
1201420
1 OF 1
DEVELOPMENT HARDWARE
FOR TEST OR EXPERIMENTATION
4
3
2
1
H
G
F
E
D
C
B
A

NOTES

1 INTERPRET DRAWING PER ATC-STD-4926.

2 MATCH MACHINE INDICATED DIAMETER WITH MATING DIAMETER TO PROVIDE .002 TO .004 DIAMETRICAL CLEARANCE FIT.

3 ALTER ITEM AS SHOWN.

4 ELECTRON BEAM WELD PER ATC-STD-4897-1.

5 SOL AUBURN SPARK PLUG CO., 89 YORK STREET, AUBURN, NEW YORK.

6 PERMISSIBLE TO MACHINE ① TO FINAL CONFIGURATION PRIOR TO WELDING.

7 MARK PER AS478-7A WITH 1201922 AND APPLICABLE DASH NO. OBLITERATE ORIGINAL IDENTIFICATION NUMBER WITHOUT DAMAGE TO THE PART.

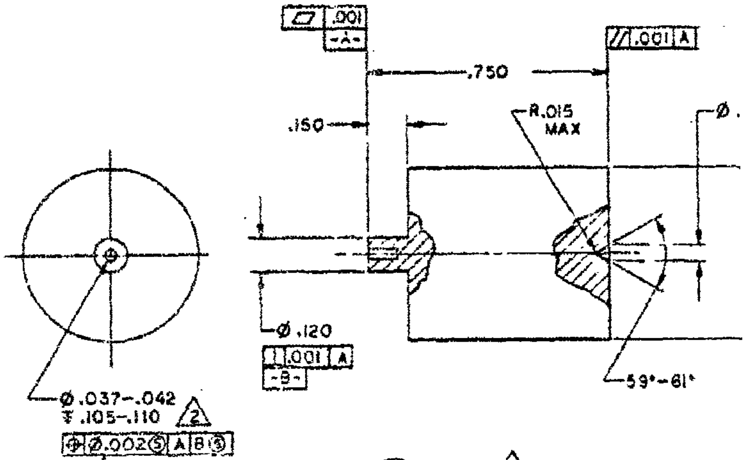

① DETAIL 6

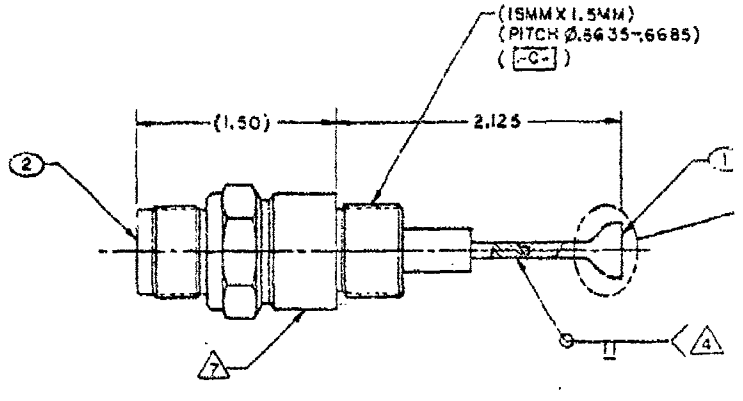

⑨ ASSEMBLY

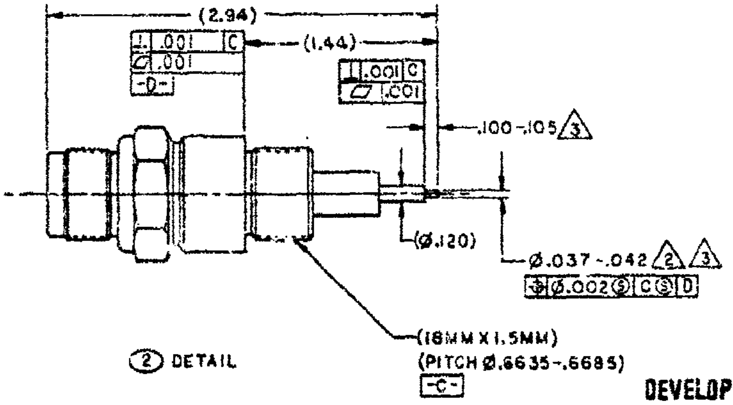

② DETAIL

DEVELOPMENT HARDWARE

FOR TEST OR EXPERIMENTATION

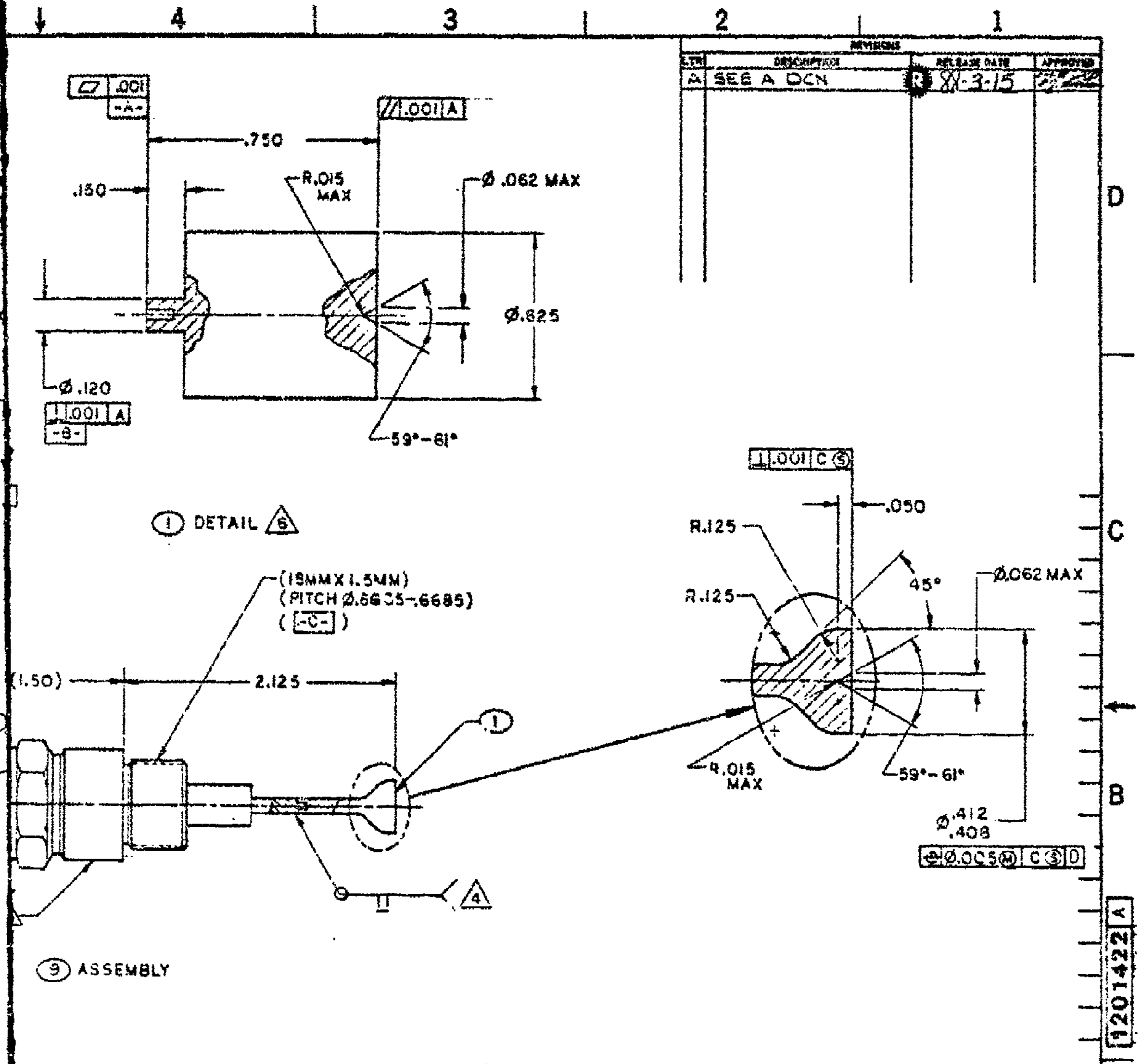

| REVISIONS | | | |
|---|---|---|---|
| LTR | DESCRIPTION | RELEASE DATE | APPROVED |
| A | SEE A DCN | R XX-3-15 | |

| | | | | | |
|---|---|---|---|---|---|
| 1 | | -2 | IGNITER | ALTER FROM SI-18C 5 | 2 |
| 1 | | -1 | TIP, ELECTRODE | NICKEL UNS NO2200 OR LOW-CARBON NICKEL UNS NO2201 PER ASTM B-160 | 1 |
| -3 | ITEM NO. | PART OR IDENTIFYING NO. | NOMENCLATURE OR DESCRIPTION | MATERIAL SPECIFICATION | ITEM NO. |
| QTY REQ'D PER ASSY | PARTS LIST | | | | |

CONTRACT NO. NAS 3-24[illegible]

UNLESS OTHERWISE SPECIFIED

DIMENSIONS & TOLERANCES ARE IN INCHES

TOLERANCES

DECIMALS .XX ±.03 .XXX ±.010

ANGULAR ±2°

SURFACE ROUGHNESS

DO NOT SCALE DRAWING

DWG. LEVEL 1

DRAWN A. GRAY 87-11-3

CHECK 12-4-87

DSGN 12-4-87

DESIGN ACTIVITY 12-4-87

TechSystems COMPANY

TITLE

**IGNITER, SPARK**

SIZE D

FSCM NO. 05824

DWG NO. 1201422

SCALE 2/1

RELEASE DATE 87-12-7 R

SHEET 1 OF 1

THIS DWG HAS BEEN REVIEWED PER POLICY 3P-L 87-12-9

PMENT HARDWARE

T OR EXPERIMENTATION

NOTES:

1 INTERPRET DRAWING PER ATC-STD-4925.

2 ALTER AS SHOWN.

3 VALCOR ENGINEERING CORP., 2 LAWRENCE ROAD, SPRINGFIELD, NJ 07081.

4 MARK PER AS478-4A WITH 1201425 AND APPLICABLE DASH NO.

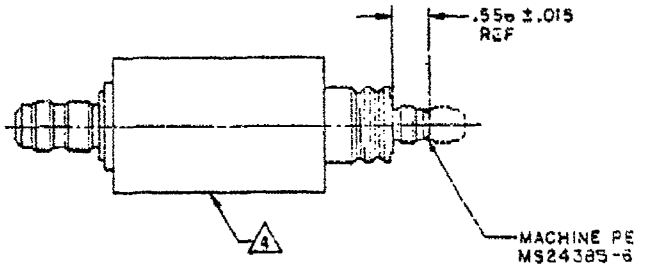

DEVELOPMENT HARDWARE
FOR TEST OR EXPERIMENTATION

QTY REQ'D PER ASSY

CONTRACT NO.

DECIMALS
.XX ±.03
.XXX ±.010

| REVISIONS | | | |
|---|---|---|---|
| LTR | DESCRIPTION | RELEASE DATE | APPROVED |
| A | SEE A DCN. | ® 88-3-15 | |

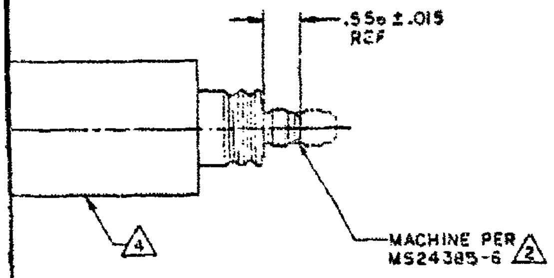

1201423 A

**ALTERED ITEM DRAWING**

| | | | | |
|---|---|---|---|---|
| | | -1 | | ALTER FROM V27200-4873 △3<br>FSCM NO. 96487 |
| QTY REQ'D PER ASSY | FSCM NO. | PART OR IDENTIFYING NO. | NOMENCLATURE OR DESCRIPTION | MATERIAL SPECIFICATION |

PARTS LIST

CONTRACT NO. NAS 3-24896

.XX ±.03 ±2°

DO NOT SCALE DRAWING

DWG. LEVEL 1

DRAWN A. GRAY 87-4-20

87-4-17

87-4-17

87-4-17

TechSystems COMPANY

TITLE **VALVE, PROPELLANT**

SIZE D | FSCM NO. 05824 | DWG NO. 1201423

SCALE 1/1 | RELEASE DATE 87-12-7 ® | SHEET 1 OF 1

ENT HARDWARE

EXPERIMENTATION

**NOTES:**

1. INTERPRET DRAWING PER ATC-STD-4026.

2. MATCH MACHINE INDICATED DIAMETER TO MATING DIAMETER TO PROVIDE FOR A .004 TO .006 DIAMETRICAL CLEARANCE FIT.

3. MARK PER AS478-7A WITH 1281V29 AND APPLICABLE DASH NUMBER.

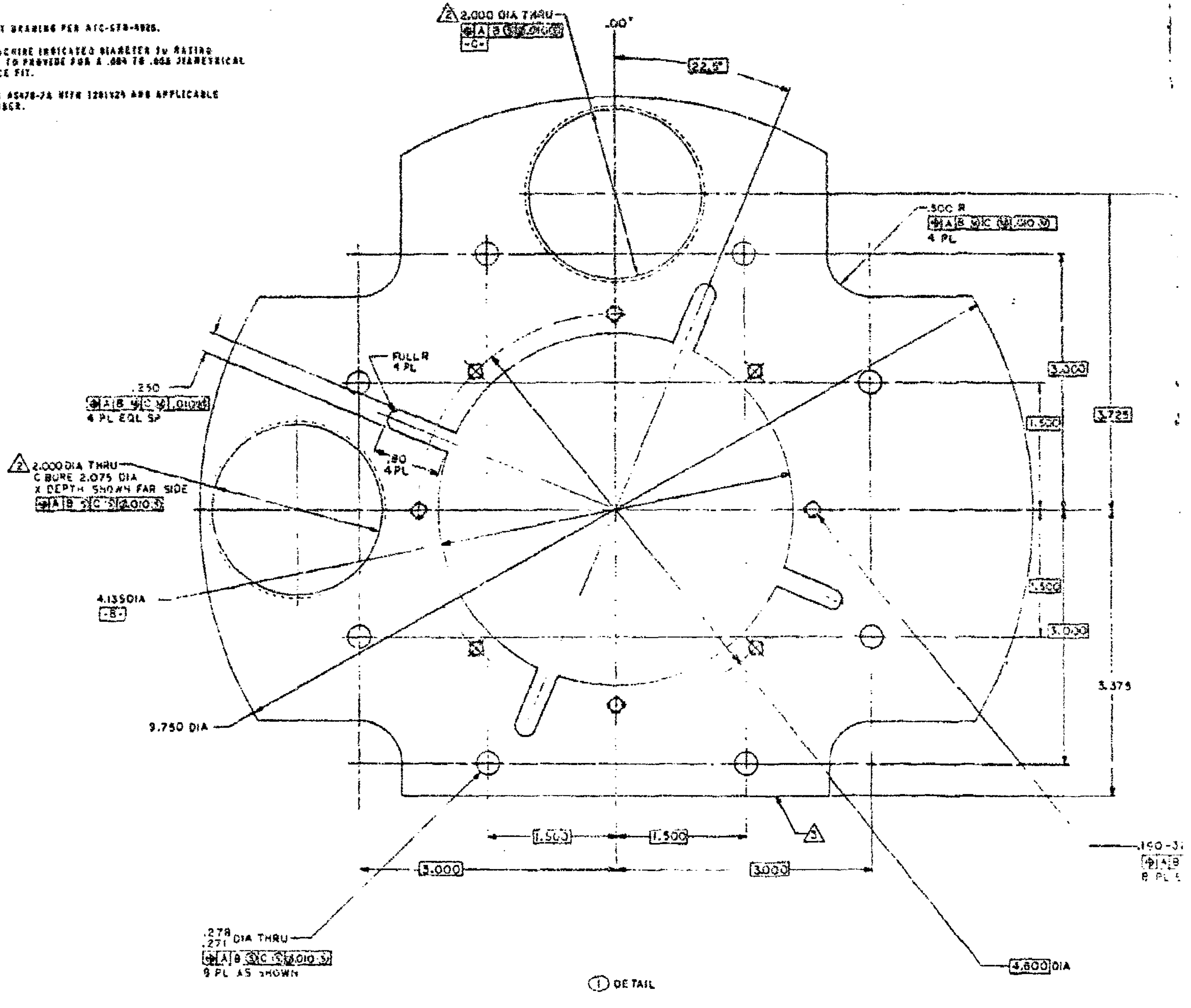

DEVELOPMENT HARD

FOR TEST OR EXPERIMENTAT

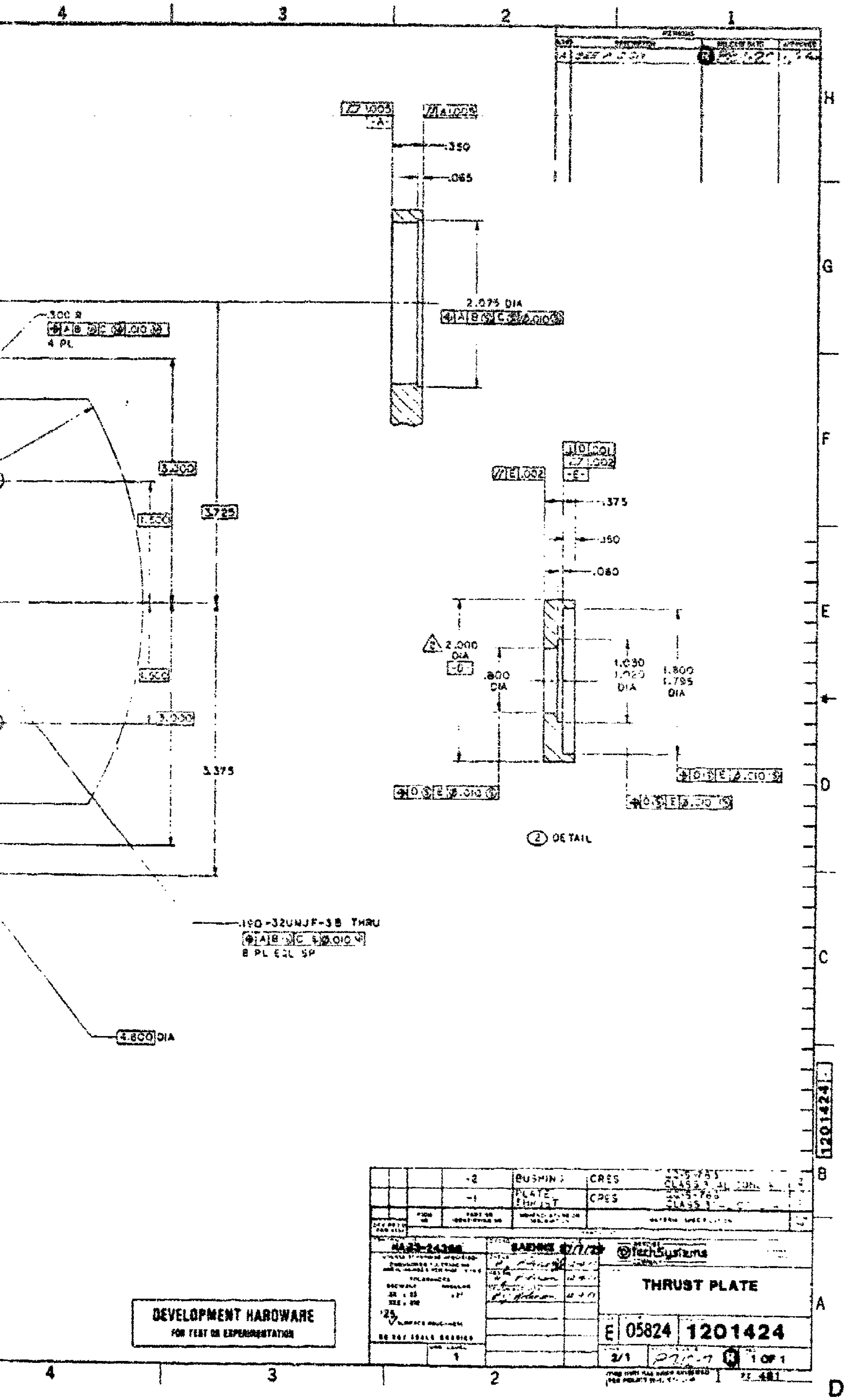
.350
.065
2.075 DIA
.300 R
4 PL
3.200
1.500
3.725
3.000
3.375
.375
.350
.080
2.000 DIA
-D-
-E-
.800 DIA
1.030
1.020
DIA
1.800
1.795
DIA
② DETAIL
.190-32UNJF-3B THRU
8 PL EQL SP
4.800 DIA
DEVELOPMENT HARDWARE
FOR TEST OR EXPERIMENTATION
-2
BUSHING
CRES
CLASS 3
-1
PLATE, THRUST
CRES
CLASS 3
TechSystems
THRUST PLATE
E
05824
1201424
2/1
1 OF 1
1201424