# AD-A237 113

PAGE

Form Approved
OMB No 0704-0188

Public reporting burden for this collection of information is estimated to average 1 hour per response, including the time for reviewing instructions, searching existing data sources, gathering and maintaining the data needed, and completing and reviewing the collection of information. Send comments regarding this burden estimate or any other aspect of this collection of information, including suggestions for reducing this burden, to Washington Headquarters Services, Directorate for information Operations and Reports, 1215 Jefferson Davis Highway, Suite 1204, Arlington, VA 22202-4302, and to the Office of Management and Budget, Paperwork Reduction Project (0704-0188), Washington, DC 20503

| 1. AGENCY USE ONLY (Leave blank) | 2. REPORT DATE | 3. REPORT TYPE AND DATES COVERED |
|---|---|---|
| | 1 Sep 89 | Aug 88 - Sept 89 |

4. TITLE AND SUBTITLE: Technology Insertion (TI)/Industrial Process Improvement (IPI) Task Order No. 1

Data Base Documentation Book for OC-ALC/MABPAB (Sheet Metal)

5. FUNDING NUMBERS

Contract

6. AUTHOR(S)

McDonnell Douglas Missile Systems Company

7. PERFORMING ORGANIZATION NAME(S) AND ADDRESS(ES)

McDonnell Douglas Missile Systems Company
St. Louis, Missouri 63166

8. PERFORMING ORGANIZATION REPORT NUMBER

F33600-88-D-0567

DTIC

9. SPONSORING/MONITORING AGENCY NAME(S) AND ADDRESS(ES)

HQ AFLC/LGME
WPAFB OH 45433

10. SPONSORING/MONITORING AGENCY REPORT NUMBER

F33600-88-D-0567

11. SUPPLEMENTARY NOTES

Prepared in cooperation with OC-ALC & HQ AFLC

12a DISTRIBUTION/AVAILABILITY STATEMENT

Distribution Statement A

12b. DISTRIBUTION CODE

13. ABSTRACT (Maximum 200 words)

Technology Inser ion (TI)/Industrial Process Improvement (IPI) Data Base Documentation Book Volume, for OC-ALC/MABPAB (Sheet Metal). This document contains detailed information about layouts equipment and processes for this RCC.

14 SUBJECT TERMS: MAINTENANCE, DATABASE, EQUIPMENT, TECHNOLOGY INSERTION, AFLC, AF, MABPAB, METALS, SHEET METALS,

15. NUMBER OF PAGES: 554

16. PRICE CODE

| 17. SECURITY CLASSIFICATION OF REPORT | 18. SECURITY CLASSIFICATION OF THIS PAGE | 19. SECURITY CLASSIFICATION OF ABSTRACT | 20. LIMITATION OF ABSTRACT |
|---|---|---|---|
| Unclassified | Unclassified | Unclassified | Unclassified |

# DISCLAIMER NOTICE

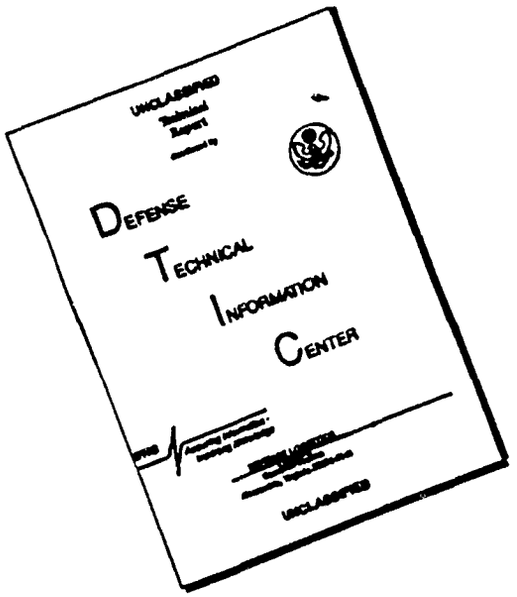


THIS DOCUMENT IS BEST QUALITY AVAILABLE. THE COPY FURNISHED TO DTIC CONTAINED A SIGNIFICANT NUMBER OF PAGES WHICH DO NOT REPRODUCE LEGIBLY.

# TECHNOLOGY INSERTION-ENGINEERING SERVICES
# PROCESS CHARACTERIZATION
# TASK ORDER NO. 1
# (BLOCK II)

## DATABASE DOCUMENTATION BOOK

**OC-ALC**

**MABPAB**

**CONTRACT SUMMARY REPORT**
**11 SEPTEMBER 1989**

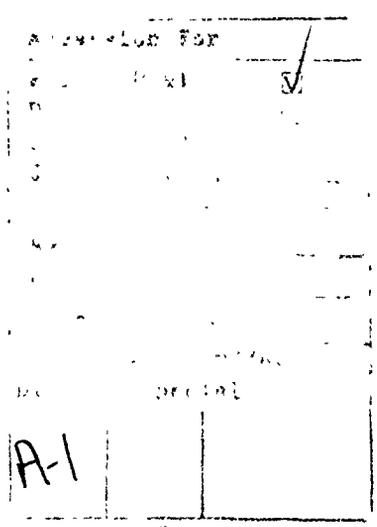


**CONTRACT NO. F33600-88-D-0567**
**CDRL SEQUENCE NO. B008**




***MCDONNELL DOUGLAS***
*McDonnell Douglas Missile Systems Company*
*St. Louis, Missouri 63166-0516 (314) 232-0232*

Distribution Statement A. Approved for public release; distribution is unlimited.

91-02814



91 6 19 224

TABLE OF CONTENTS


1.0 IDENTIFICATION OF RCC (TAB: INTRODUCTION)

2.0 GENERAL INFORMATION

- 2.1 FACILITY LAYOUT DRAWING
- 2.2 EQUIPMENT
- 2.3 WORKFORCE
- 2.4 REPAIR WORK TECHNOLOGIES
- 2.5 WORKLOAD MIX AND VOLUME
- 2.6 MATERIAL HANDLING
- 2.7 STORAGE
- 2.8 PROCESS FLOW CHART

3.0 80/20 ANALYSIS OF RCC

- 3.1 VALIDATION OF 80/20 ANALYSIS

4.0 DATA COLLECTION

- 4.1 DATA COLLECTION PROCESS

5.0 INPUT DATA FORMAT

- 5.1 PROFILE DATA SHEETS
- 5.2 MODEL INPUT FILES

6.0 VALIDATION OF INPUT DATA

7.0 COMPUTER SIMULATION ANALYSIS OF RCC

8.0 VALIDATION OF SIMULATION ANALYSIS

9.0 IDENTIFICATION OF TAGUCHI FACTORS (TAB: BRAINSTORMING)

10.0 EXPERIMENTATION OF TAGUCHI FACTORS

11.0 DEVELOPMENT OF QUICK FIXES (TAB: POTENTIAL IMPROVEMENTS)

12.0 DEVELOPMENT OF FOCUS STUDIES (TAB: POTENTIAL IMPROVEMENTS)

13.0 ADDITIONAL SUPPORT DATA (TAB: SUPPORTING DATA)

Memo To: MABE 11 April 1989
MAB

Subject: Technology Insertion (TI) Project

1. I attended a TI Technical Coordination meeting at McDonnell Douglas Missile System Company (MDMSC), St. Louis, Mo. from 28-30 Mar 89. The attached MAWF memo gives full details on attendees and agenda items.

2. MDMSC personnel returned to OC-ALC/Tinker AFB on 31 Mar 89 to resume gathering data for TASK Order #1 (Process Characterization). Their target completion date for this phase has been extended to Sept 89, however, MDMSC has agreed to complete the MABPAB Sheetmetal Shop Process Characterization through experimentation by 15 Jun 89 to facilitate our planned move. MDMSC began work on the additional information for MABPAB on 3 Apr 89. Attached is the first week status report completed by MDMSC representatives indicating a start and due date for each repaired profile element.

3. MDMSC Deputy Program Manager, Lou Mavros and Model Development and Experimentation Manager, Mike McCoy plan to visit Tinker AFB on 12 and 13 April. (See attached MDMSC Organization Chart). We have scheduled time on MAB calendar to meet with them at 14:00 hours 13 Apr 89. They have a program briefing and can answer questions on the simulation model.

Earl E. Stamps

EARL E. STAMPS, Chief
MISTR Planning Resources &
Standards Unit

3 Atch
1. MAWF Memo, 3 Apr 89
2. MABPAB Status, 7 Apr 89
3. MDMSC TI Org Chart

## EARL'S WISH LIST

- DECREASE FLOW TIMES
- DECREASE SPACE REQUIREMENT
- DECREASE LABOR HOURS
- INCREASE OUTPUT
- IMPROVE CONTROL/ORG. STRUCTURE

## PROBLEM STATEMENT:

**HOW TO RELOCATE MABPAB (SHEETMETAL SHOP) FROM**

**ITS CURRENT 95,000sq ft. FACILITY TO A 60,000 sq ft.**

**FACILITY AND MAINTAIN FY-90 WORKLOAD & SURGE CAPACITY**

**E. STAMP**

**07 JUNE 1989**

# Executive Summary.

## Background

### Relocation of MABPAB sheet-metal shop

- After the Nov 84 Fire the sheet-metal shop moved to building 95.
- DS warehouse at 98% saturation
- CC instructed MA to vacate MABPAB by Sep 89.
- MA Directed establishment of a Facility Plng. Group.
- Relocation of MABPAB to building 2101
- Current space in Bldg 95 is 95,000 SF
- Available space in Bldg 2101 is 61,000 SF.

# MABPAB

## OVERVIEW

THE SHEET METAL BACK SHOP RELOCATED TO BLDG 95 AFTER THE NOV 84 FIRE. AND SHARES SPACE WITH:

| | | |
|---|---|---|
| MABPAB | 101,634 | SF |
| DFS SUPPLY | 460 | SF |
| SAC ENGINES | 13,255 | SF |
| (QUALITY) MAQBA | 128 | SF |
| ADMIN | 1444 | SF |
| RESTROOMS | 1338 | SF |
| UTILITY | 541 | SF |
| | 118,800 | SF |

101,634 SF INCLUDES PRODUCTION AREA OF 56,375 SF AND PRODUCTION STORAGE 45,259 SF. (TEMPORARY STORAGE)

MABPAB RESTORE PARTS FOR KC 135 AIRCRAFT. THE 80/20 LIST INCLUDES END ITEMS LIKE:

- COWL (RH & LH PANEL)
- NOSE COWL
- FLAPS / FORE FLAPS
- AILERONS
- DOOR (MLG)
- TAILCONE
- SLEEVE
- FAIRINGS

# MABPAB PROCESS CHARACTERIZATION.

Side Cowl Panel

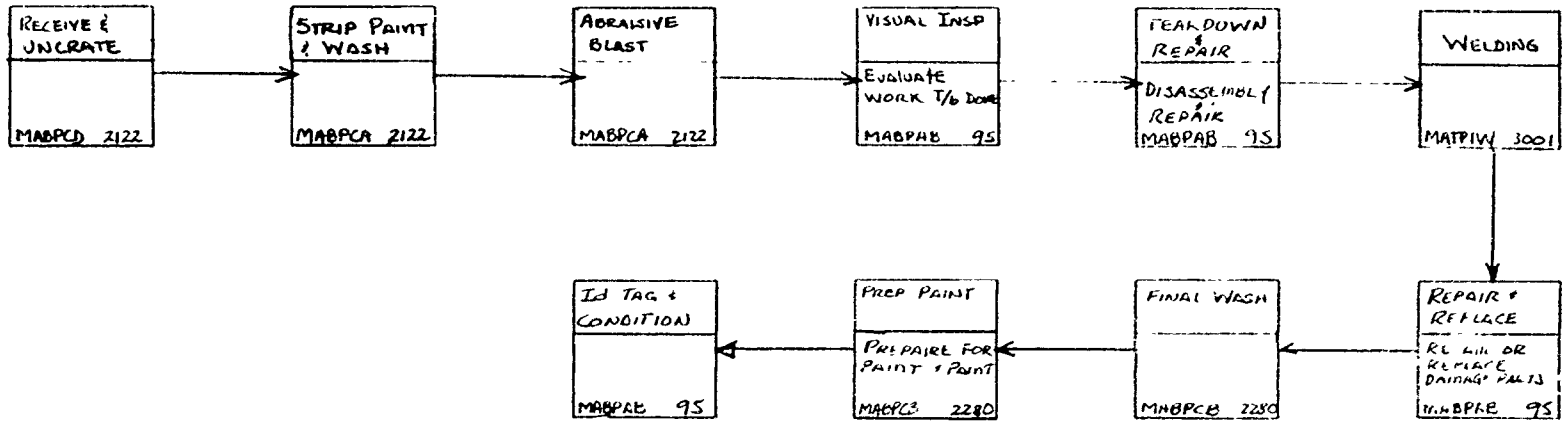

# Equipment

# MABPAB FIXTURES

## FLIGHT CONTROLS

| NAME | PART NO. | QTY | APPLICATION |
|---|---|---|---|
| FILLET FLAP | SC65-1062T1 | 1 | E3A/135 |
| RUDDER | 590CJ1130 | 1 | E3A/135 |
| INBD FLAP | SC65-1063T1 | 1 | E3A |
| LH/RH ELEVATOR | SC5-96190T1 | 1 | E3A |
| LH/RH ELEVATOR | 590CJ1120 | 1 | 135 |
| INBD AILERON | 590CJ1010 | 3 | E3A/135 |
| OTBD MAIN FLAP | 590CJ1030 | 1 | E3A/135 |
| INBD MAIN FLAP | 590CJ1020 | 1 | 135 |
| OTBD SPOILER | 590CJ1060 | 1 | E3A/135 |
| INBD SPOILER | 590CJ1050 | 1 | E3A/135 |
| OTBD AILERON | 590CJ1000 | 3 | E3A/135 |

## DOORS

| | | | |
|---|---|---|---|
| OTBD MLG | 590CJ1110 | 4 | E3A/135 |
| INBD MLG | 590CJ1100 | 4 | E3A/135 |

## MISC

| | | | |
|---|---|---|---|
| HOG NOSE FAIRING | 65-10607-46 | 1 | 135 |
| OTBD ENG STRUT | 590CJ1150 | 1 | 135 |
| INBD ENG STRUT | 590CJ1140 | 1 | 135 |
| BOTTOM PANEL TF33 P9 | FAJ64-8327-621 | 1 | 135 |
| TAIL CONE | 762/259 | 1 | 135 |
| KNEE CAP FAIRING | TJ5-85654 | 1 | 135 |
| BOOM POD FAIRING. | | 1 | 135 |
| NOSE WHEEL FAIRING | 2FAJ5-73139-1 | 1 | 135 |
| NOSE WHEEL FAIRING | FRJ5-73139-1 | 1 | 135 |
| NOSE WHEEL FAIRNG | FAJ5-73139-1 | 1 | 135 |

## COWLING

| | | | |
|---|---|---|---|
| RH SIDE COWL | SC65-2549T | 1 | E3A |
| LH SIDE COWL | SC65-2549T1 | 1 | E3A |
| RH SIDE COWL J57 | 3AJ5-85638 | 2 | 135 |
| LH SIDE COWL J57 | 3AJ5-85637 | 2 | 135 |
| RH SIDE COWL TF33P5 | 0C75-64-8327-488 | 1 | 135 |
| LH SIDE COWL TF33P5 | 0C75-64-8327-487 | 1 | 135 |
| NOSE COWL | 204-70099-3ASMJ | 1 | E3A |
| NOSE COWL | 204-70099-TRMJ | 1 | E3A |
| NOSE COWL J57 | AJ5-85655 | 1 | 135 |

# MABPAB EQUIPMENT

| NAME | MODEL #/TYPE | QUANTITY |
|---|---|---|
| BENDING MACHINE (HAND) | 416 | 1 |
| LARGE BAND SAWS | | 2 |
| ROTEX PUNCH PRESS | | 1 |
| DRILL (FLOOR MODEL) | 1200-118 | 1 |
| GRINDER FLOOR MODEL, 2 WHEEL ELECT. | | 1 |
| PRESS BRAKE (CHICAGO STEEL CO.) | 000323 | 1 |
| POWER SQUARING MACHINE | 002741 | 1 |
| PRESS BRAKE | 4560G | 1 |
| SMALL METAL SHEAR | 241-C | 1 |
| SMALL DRILL PRESS | | 1 |
| GRINDER 1 WHEEL, FLOOR MODEL | WG6566 | 1 |
| PUNCH PRESS | P41P | 1 |
| SANDER (BELT) FLOOR MODEL | | 1 |
| BENDING MACHINE (HAND) | BB-316 | 1 |

# MABPFF FIXTURES

| NAME | PART NO. | QTY |
|---|---|---|
| ELEV/RUDDER BALANCE | RP046 | 1 |
| BOMB BAY DOOR (LARGE) | FME35-30600-3 | 2 |
| BOMB BAY DOOR (LARGE) | FME35-30600-1 | 2 |
| BOMB BAY DOOR (LARGE) | FME35-30600-2 | 2 |
| BOMB BAY DOOR (SMALL) | AJ5-46867-3 | 1 |
| BOMB BAY DOOR (SMALL) | AJ5-46867-4 | 2 |
| BOMB BAY DOOR (SMALL) | AJ5-46868-28 | 1 |
| BOMB BAY DOOR (SMALL) | AJ546868-27 | 1 |
| BOMB BAY DOOR (SMALL) | AJ5-46867-3 | 1 |

# MABPFF EQUIPMENT

| NAME | MODEL #/TYPE | QUANTITY |
|---|---|---|
| DOUBLE SANDER DISK (FLOOR MODEL) | | 1 |
| DRILL PRESS (FLOOR MODEL) | | 4 |
| GRINDING MACHINE | WISSOTA E8M | 1 |
| WELDER | MILLER 330ST | 1 |
| BRAKE, MECH | | 1 |
| BRAKE, MECH FORMING ROLLER | 0617 | 2 |
| BRAKE, HAND | NATIONAL | 2 |
| METAL STREACHER (FLOOR MODEL) | | 1 |
| PRESS ARBOR | FAMCO | 2 |
| PUNCH, MECH | ROTEX | 1 |
| POWER SHEAR | MASPERI CM500A | 1 |
| DIMPLER | 300 | 1 |
| BRAKE PRESS | 65M75 | 1 |
| DOALL SAW | 3613-2 | 1 |

# FY90

## Equipment Profile

| Code | Description | 1st | 2nd | 3rd -Shift | End Item |
|---|---|---|---|---|---|
| 25 | Bench/Work Sta | 13 | 15 | 13 | 15025A |
| 113 | " | 13 | 13 | 13 | 15113A |
| 119 | " | 3 | 3 | 3 | 15119A/15121A |
| 126 | " | 3 | 3 | 3 | 15126A/15300A |
| 136 | " | 6 | 6 | 6 | 15136A/15137A |
| 140 | " | 7 | 7 | 7 | 15140A |
| 150 | " | 18 | 18 | 18 | 15150A |
| 175 | " | 3 | 3 | 3 | 15175A |
| 178 | " | 5 | 5 | 5 | 15178A |
| 188153 | " | 6 | 6 | 6 | → 15188A/15189A/15191A/15192A |
| 188154 | " | 6 | 6 | 6 | → 15188ASUB1/15189ASUB1/15191ASUB1/15192ASUB1 |
| 236 | | 4 | 4 | 4 | 15236A |
| 249 | | 7 | 7 | 7 | 15250A/15249A |

Phone Conversation w/ Larey

6/1/89

# FIXTURE PROFILE

| | CODE | NOUN | QUANTITY 1st | 2d | 3r | END ITEM |
|---|---|---|---|---|---|---|
| | F 335-02 | | 1 | 1 | 1 | |
| | F 135-01 | | 1 | 1 | 1 | |
| ✓ | F 335-03 | | 2 | 2 | 2 | 15136A / 15137A |
| | 335-04 | | 1 | 1 | 1 | 15188A / 15189A |
| | 135-02 | | 1 | 1 | 1 | 15191A / 15192A |
| | 335-05 | | 1 | 1 | 1 | |
| ✓ | 335-07 | | 1 | 1 | 1 | 15249A / 15250A |
| ✓ | " -08 | | 3 | 3 | 3 | 15119A / 15321A |
| ✓ | " -09 | | 3 | 3 | 3 | |
| | 135-04 | | 1 | 1 | 1 | |
| | 135-05 | | 1 | 1 | 1 | |
| | 135-06 | | 1 | 1 | 1 | |
| | 135-07 | | 1 | 1 | 1 | |
| | " -08 | | 1 | 1 | 1 | 15140A |
| | " -09 | | 1 | 1 | 1 | |
| | " -10 | | 1 | 1 | 1 | |
| | " -11 | | 1 | 1 | 1 | |
| | " -12 | | 1 | 1 | 1 | |
| | " -13 | | 3 | 3 | 3 | 15175A |
| | " -13 | | 2 | 2 | 2 | 15113A |
| | " -14 | | 2 | 2 | 2 | 15025A |
| | " -15 | | 1 | 1 | 1 | |
| | " -16 | | 1 | 1 | 1 | |
| | - | | | | | |
| ✓ | F 335-10 | | 3 | 3 | 3 | 15188A5061 / 15189A5061 |

# FIXTURES PROFILE CONT

| CODE | NOUN | 1st | 2nd | 3rd | END ITEM |
|---|---|---|---|---|---|
| FE3A-05 | | 1 | 1 | 1 | |
| " -06 | | 1 | 1 | 1 | |
| F135-17 | | 1 | 1 | 1 | 1515OA |

# MANPOWER.

FY 89 MANPOWER REQUIREMENTS (PE'E)

| | QTR 1 | QTR 2 | QTR 3 | QTR 4 | FY TOTAL |
|---|---|---|---|---|---|
| MABPAB | 287<br>296 | 296<br>260 | 298<br>-13 | 298<br>206 | 295<br>24- |
| MABPEF | ~~88~~<br>[illegible] | 83<br>87 | ~~85~~<br>84 | 85<br>65 | 85<br>[illegible] |
| MABPCA *<br>INPUT/STRIP | 24 | 24 | 25 | 25 | 24 |
| MABPCB *<br>PAINT | 14 | 14 | 14 | 14 | 14 |
| MABPCD *<br>REC/UNCREAT | 3 | 3 | 3 | 3 | 3 |

* MISTR PE'S ONLY

## SKILL CODES

U.163806 - (10)

| | | |
|---|---|---|
| MABPAB | AS | LEFT HAND SIDE COWL |
| | BS | RIGHT HAND SIDE COWL |
| | CS | NOSE COWL |
| | DS | FLAPS |
| | ES | FLIGHT CONTROLS |
| | FS | MISC |
| | GS | DOOR SHOP } → CMT PROPOSAL |
| | HS | FLIGHT CONTROL } → CMT PROPOSAL |
| MABPFF | AS | SPOILERS, HATCHES, TIP GEAR, POP-UP ANTENNA, SUPPLY B/B DOORS |
| | WS | FLAPS, RUDDERS, ELEVATORS |
| | YS | NOSE COWL, SIDE COWL |
| | 3S | PDM |
| MABPCA | WL | EQUIPMENT CLEANERS |
| MABPCB | B3 | PAINTERS |
| MABPCD | MQ | MOVERS |
| | CQ | CRANE OPERATORS |
| | EQ | CHECKERS |

# FY90

## MAN-POWER

| | Quantity | | | | Factor | | | |
|---|---|---|---|---|---|---|---|---|
| | 1st | 2nd | 3rd | 4th | 1st | 2nd | 3rd | |
| AS | 13 | 18 | 16 | 17 | 5.0 | 5.3 | 6.1 | 5.9 |
| BS | 14 | 16 | 15 | 16 | " | " | " | " |
| CS | 10 | 16 | 16 | 12 | " | " | " | " |
| DS | 7 | 9 | 8 | 8 | " | " | " | " |
| ES | 75 | 72 | 72 | 71 | " | " | " | " |
| FS | 78 | 78 | 78 | 80 | " | " | " | " |

Phone Conversation w/ Larry 6/1/89

# FLOW CHART
# SIDE COWL REPAIR SHOP

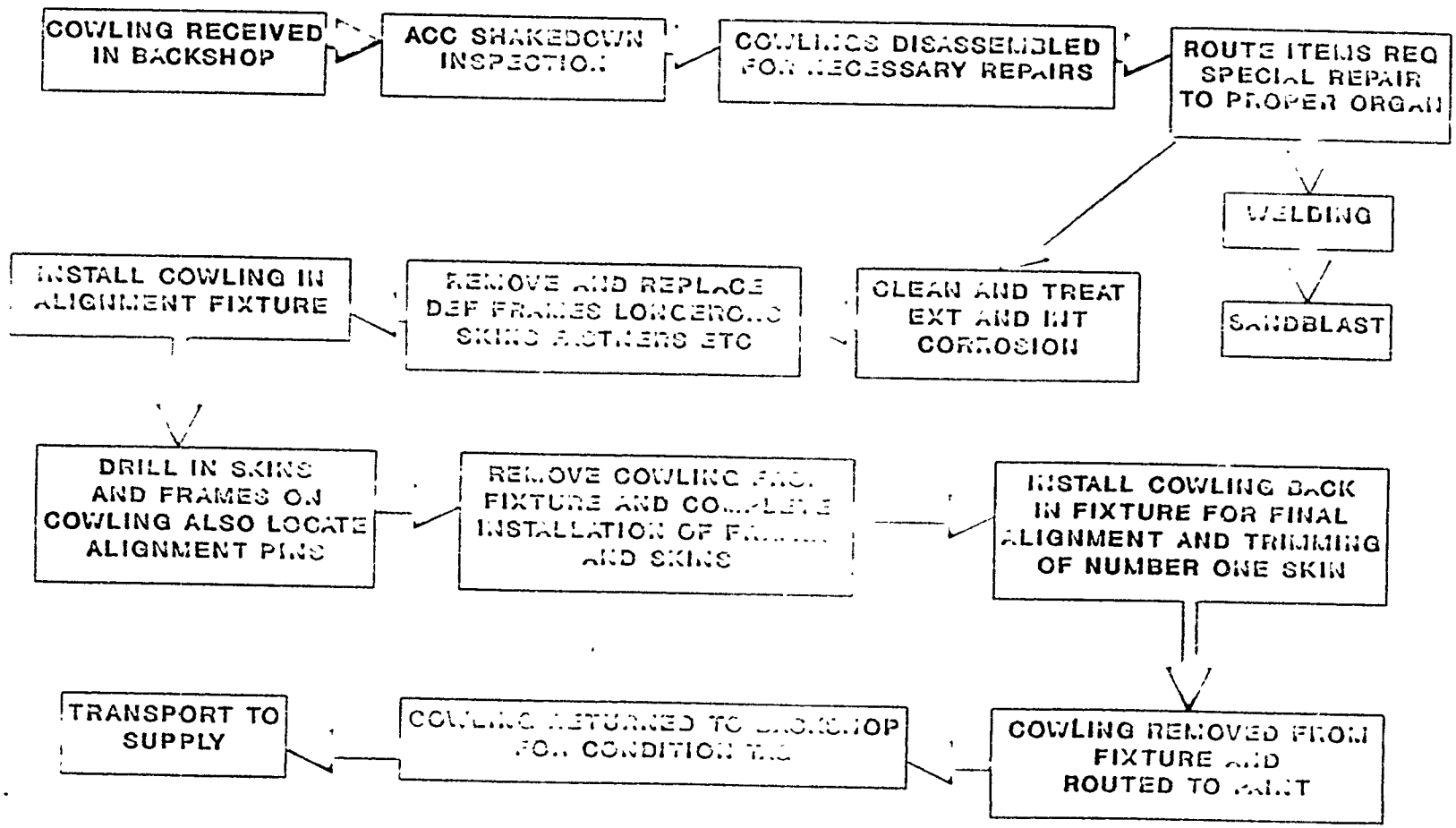

# GENERAL PRODUCT FLOW

| STEP | |
|---|---|
| 1 | ITEMS ARE RECIEVED & UNCRATED OUTSIDE Buildg. 2122 by MABPCD |
| 2 | MOVED TO INSIDE TO STRIP PAINT / BLAST / By MABPCA. |
| 3 | MOVED TO BUILDING 95 FOR SHAKEDOWN INS (3 MILES) |
| 4 | IF NEEDED WELDING MOVED TO Bldg 3001 (2 m MOVE TO BLDG 95 IF NEEDED BLAST/WASH MOVE TO 2122 (MABPCD |
| 5 | DISASSEMBLY FOR REPAIR |
| 6 | IF NEED CLEANING OR INTERNAL BLASTING MOVED TO BLDG 2122 |
| 7 | CLEAN TREAT FOR CORROSION |
| 8 | INSTALL ON FIXTURE |
| 9 | R/R DEFECTIVE PARTS (SKINS, LONGERONS, RIBS, PLATES |
| 8 | (R/R: DRILL, FILE, ALIGNMENT, SHOT & BUCK RIVETS) |
| 10 | REMOVE FROM FIXTURE. PLACE PART ON STA. |
| 11 | COMPLETE ASSY. |
| 9 12 | ROUTE TO PAINT SHOP. BLDG 2280 CLEAN & PAINT by MABPCB |
| 10 13 | MOVE TO SHEET METAL. FOR Id & TAG Bldg 95. TAG & CONDITIONING by MABPAB |
| 11 14 | MOVE TO STORAGE / SUPPLY. |

SEE FLOW

IMPROVE FLOW

DISASSY. TO THE LOWEST END ITEM

RECIEVE & UNCRATE

STRIP PAINT / BLAST / WASH

INSPECT FOR CRACKS

ROUTE IF NEED WELDING

ROUTE TO SHEETMETAL SHOP

DISASSY FOR REPAIR

IN HOUSE CLEANING / BLASTING

R/R DEFECTIVE PARTS

IN HOUSE WASH/PAINT

TAG & CONDITIONING.

SEE FLOW

# "MISTR" SHEETMETAL REPAIR

FY-89

## SCOPE

STRUCTURAL & SHEETMETAL BACKSHOP
OVERHAUL REPAIR OF B-52, -135, E-3A & B1
EXCHANGEABLES INCLUDE ENGINE COWLING,
FLIGHT CONTROL SURFACES, FAIRINGS, TABS,
DOORS, HATCHES, ENGINE SLEEVES & ENGINE STRUTS

173 ITEMS 1328 PIECES/QTR

## WORKLOAD

| | | |
|---|---|---|
| 427,826 | DPSH | (PROGRAMMED MISTR) |
| 97,189 | DPSH | (PROGRAMMED PDM) |
| 19,787 | DPSH | (UNPROGRAMMED - T&M JOBS) |
| 544,802 | TOTAL | |
| 412,099 | DPSH | -135 & E3A BACKSHOP (MABPA - BLDG 95) |
| 132,703 | DPSH | B-52 BACKSHOP (MABPB - BLDG 2121) |

MABPAB - (135)

MISTR Production Numbers - 197

| | MANHOURS | PERCENT |
|---|---|---|
| MISTR | 334,914 | 81 |
| PDM | 68,963 | 17 |
| TEMPORARY | 8,222 | 2 |
| | 412,099 | 100 |

MABPFF - (B52)

MISTR Production Numbers - 51

| | MANHOURS | PERCENT |
|---|---|---|
| MISTR* | 92,912 | 70 |
| PDM | 28,226 | 21 |
| TEMPORARY | 11,565 | 9 |
| | 132,703 | 100 |

# MISTR ENGINEERED COVERAGE

48 ITEMS = 72% ~~PROJECTED~~ TOTAL WORKLOAD

MABPAB 26 ITEMS
25 ENGINEERED
1 NON-ENGINEERED

MABPFF 22 ITEMS
19 ENGINEERED
3 NON-ENGINEERED

Work sample
Block of OPS

NAME: ALC: QC PLC: MABPAB
AST NAME

| ITEM NUMBER | WCD # | WL TYPE | HIST F. TIME | STAND HOURS | EXPECT HOURS |
|---|---|---|---|---|---|
| 15025A | 15025A | 4 | 15.5 | | |
| 15113A | 15113A | 4 | 14?. | | |
| 15119A | 15119A | 4 | 8?.?5 | | |
| 15321A | 15117A | 4 | ??..24 | | |
| 15126A | 15126A | 4 | 88. ? | | |
| 15300A | 15126A | 4 | ?8. 1 | | |
| 15136A | 15136A | 4 | ?.18 | | |
| 15137A | 15136A | 4 | 9.18 | | |
| 15140A | 15140A | 4 | 51.65 | | |
| 15150A | 15150A | 4 | 85.15 | | |
| 15175A | 15175A | 4 | ?3.86 | | |
| 15178A | 15178A | 4 | 18.9? | | |
| 15188A | 15153A | 4 | 120. ? | | |
| 15189A | 15153A | 4 | 120. ? | | |
| 15188A | 15154A | 4 | 15 | | |
| 15189A | 15154A | 4 | 15 | | |
| 15191A | 15151A | 4 | 118.? | | |
| 15192A | 15151A | 4 | 118.? | | |
| 15191A | 15152A | 4 | 15 | | |
| 15192A | 15152A | 4 | 15 | | |
| 15236A | 15236A | 4 | 11.6 | | |
| 15237A | 15237A | 4 | 29.6 | | |
| 15249A | 15249A | 4 | 110.5 | | |
| 15250A | 15249A | 4 | 111 | | |
| 15237A | 15236B | 4 | 28.6 | | |

# FLOW DAY STUDY SUMMARY SHEET

| | QUEUE HOURS | STD HRS. |
|---|---|---|
| RECEIVE 2122 | | |
| PROCESS SUPPORT | 4 | |
| UNCRATE 2122 | | |
| PROCESS SUPPORT | 4 | 16 |
| WASH/STRIP 2122 | | |
| PROCESS SUPPORT | 4 | |
| MOVE 95 | | |
| PROCESS SUPPORT | 4 | |
| SHAKEDOWN 95 | | |
| PROCESS SUPPORT | 5 | |
| OVERH UL 95 | | |
| PROCESS SUPPORT | 7 | |
| MOVE 2280 | | 22 |
| PROCESS SUPPORT | 8 | |
| WASH/PAINT 2280 | | 10 |
| PROCESS SUPPORT | 7 | |
| MOVE 95 | | |
| PROCESS SUPPORT | 5 | |
| TOTAL | 48 | |

AVERAGE PROCESS SUPPORT TO OTHER DIVISIONS IS 24 HOURS*

TIMES DETERMINED FROM SAMPLE STUDY OF TEN EACH FLAPS, LH SIDE COWL, OIL COOLER TABS, AND MLG DOOR.

* MODIFY THESE HOURS BY OCCURANCE FACTOR OF ROUTED ITEM.

TYPICAL MOVEMENT OF ITEMS
START TO FINISH

BLACK - 135
RED - B52

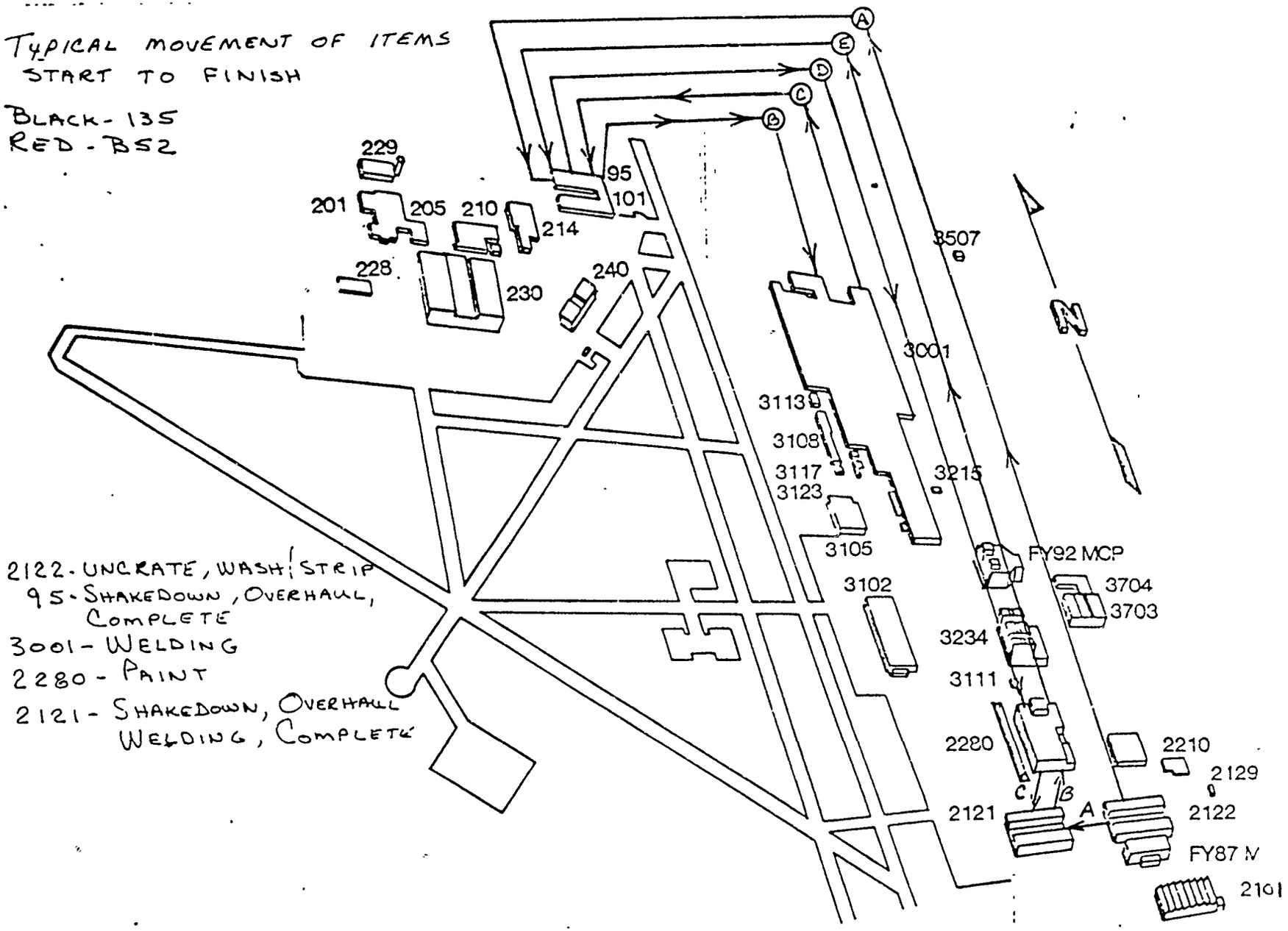


2122 - UNCRATE, WASH/STRIP
95 - SHAKEDOWN, OVERHAUL, COMPLETE
3001 - WELDING
2280 - PAINT
2121 - SHAKEDOWN, OVERHAUL WELDING, COMPLETE

TYPICAL MOVEMENT OF ITEMS
START TO FINISH

BLUE - 135
RED - 352

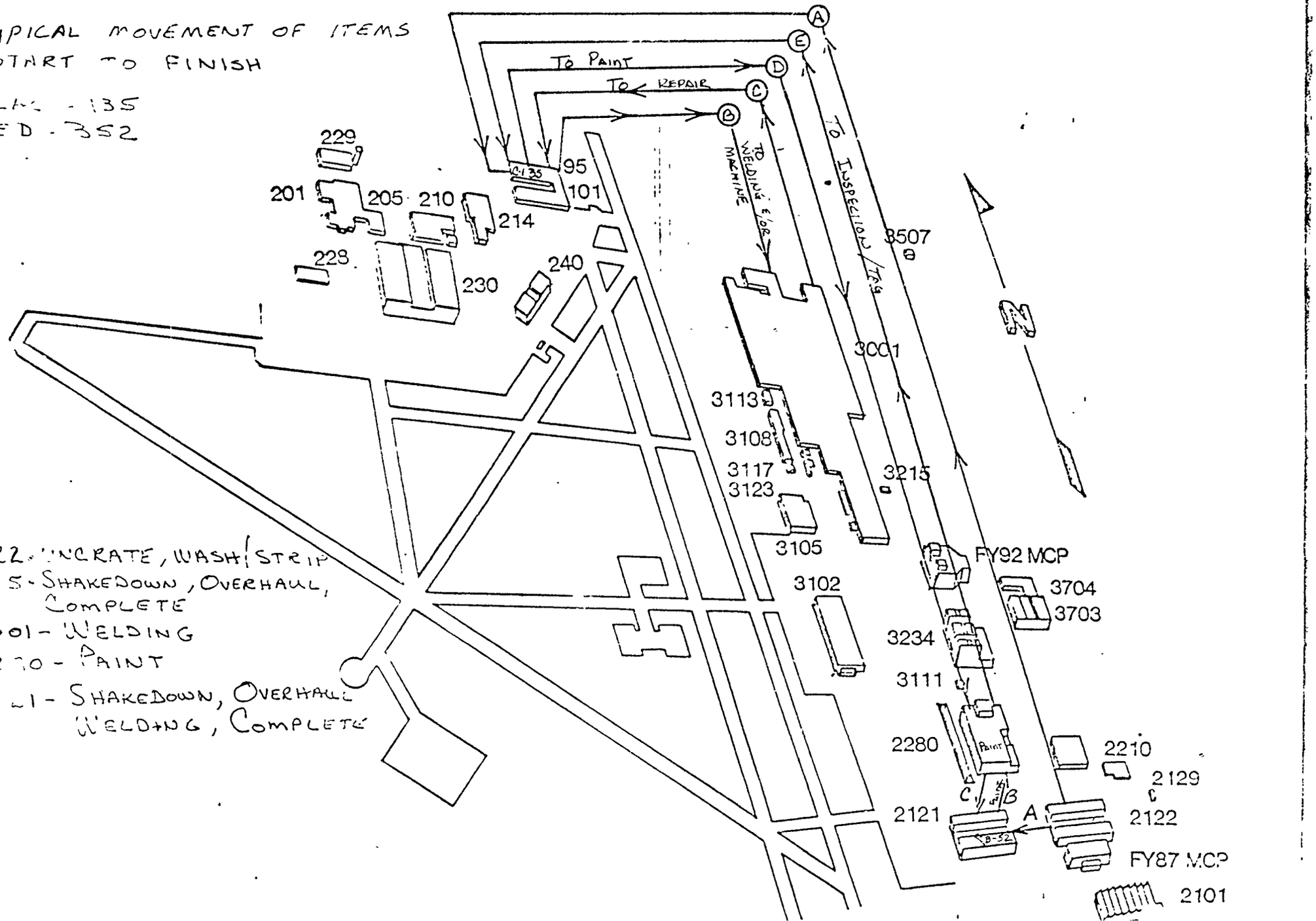


2122 - UNCRATE, WASH/STRIP
95 - SHAKEDOWN, OVERHAUL, COMPLETE
3001 - WELDING
2280 - PAINT
2121 - SHAKEDOWN, OVERHAUL WELDING, COMPLETE

OC - MABPAB

| PCN | WCD |
|---|---|
| ********** | ********* |
| 15025A | 15025A |
| 15113A | 15113A |
| 15119A | 15119A |
| 15126A | 15126A |
| 15136A | 15136A |
| 15137A | 15136AA |
| 15140A | 15140A |
| 15150A | 15150A |
| 15175A | 15175A |
| 15178A | 15178A |
| 15188A | 15153A |
| 15188ASUB1 | 15154A |
| 15189ASUB1 | 15154AA |
| 15189A | 15153AA |
| 15191A | 15151A |
| 15191ASUB1 | 15152A |
| 15192A | 15151AA |
| 15192ASUB1 | 15152AA |
| 15236A | 15236A |
| 15237ASUB1 | 15236B |
| 15237A | 15237A |
| 15249A | 15249A |
| 15250A | 15249AA |
| 15300A | 15126AA |
| 15321A | 15119AA |

Comp

OC

22 / To 51

135.

I7S150ED • ALCOC • 3019C • T123

MANAGEMENT OF ITEMS SUBJECT TO

LISTING OF MSTR FILE

| SEQ | DCN | ANSN | NOUN | WSA | PS=MRDA VI UC | TDF |
|---|---|---|---|---|---|---|
| 1 | 15025 | 1560006205602FL-50 | ~~PANEL COWL~~ | KC135 | 16432200 | 168 |
| 2 | 15113 | 1550010419310FL-50 | PANEL | KC135 | 2205400 | 150 |
| 3 | 15150 | 1560006067420FL-50 | NOSE COW | KC135 | 906400 | 97 |
| 4 | [illegible] | 1560006599181FL-50 | FLAP. | KC135 | 4740486 | 194 |
| 5 | [illegible] | 1560006560180FL-50 | [illegible] | KC135 | 1814970 | 196 |
| 7 | 15250 | 1560006562200FL-50 | FLAP | KC135 | 4740500 | 202 |
| 8 | 15249 | 1560008722401FL-50 | AILERON | KC135 | 4313300 | 112 |
| 9 | 15192 | 1560008722400FL-50 | AILERON | KC135 | 5082000 | 112 |
| 10 | 15300 | 1560006562201FL-50 | FLAP | KC135 | 4740500 | 204 |
| 11 | 15130 | 1560003409215FL-50 | DOOR | KC135 | 2037855 | 100 |
| 12 | 15321 | 1560004413621FL-50 | AILERON | KC135 | 6474600 | 80 |
| 13 | 15126 | 1560003404191FL-50 | DOOR | KC135 | 2037855 | 92 |
| 14 | 15119 | 1560003409215FL-50 | DOOR | KC135 | 1305810 | 90 |
| 15 | [illegible] | 1560003397220FL-50 | DOOR | KC135 | 1250412 | 89 |
| 16 | [illegible] | [illegible]8/470FL-50 | AILERON | KC135 | 909200 | 80 |
| 17 | [illegible] | [illegible] | TAILCONE | KC135 | 1050755 | 88 |
| 18 | [illegible] | [illegible] | TAB | KC135 | [illegible] | 245 |
| 19 | 15140 | 1560004837577FL-50 | ELEVE | KC135 | 2566600 | 1496 |
| 20 | 15174 | 1560006256548FL-950 | FAIRING | KC135 | 504200 | 594 |
| 21 | 15277 | 1560007862633FL | STRUT | KC135 | 1158400 | 315 |
| 22 | 15294 | 1560006255547FL | FAIRING | C135 | 5942000 | 1905 |
| 23 | 15104 | 1560000555583FL | NOSEGEAR | KC135 | 745325 | 370 |
| 24 | 15279 OUT | 1560007862035FL | STRUT | EC-RC135 | 1294000 | 1565 |
| 25 | 15278 | 1560007862035FL | STRUT | KC135 | 6748300 | 2533 |
| 26 | 15121 | 1560003404202FL | HATCH | KC135 | 20303300 | 1938 |
| 27 | 15284 | 1560002517056FL | RUDDER | KC135 | 4535700 | 271 |
| 28 | 15118 | 1560003314843FL | DOOR | CBT | 7384800 | 2388 |
| 29 | 15257 | 1560009748817FL | COWL | KC135 | 8943490 | 363 |
| 30 | 15130 | 1560003409348FL | FLAP | KC135 | 2441500 | 1563 |
| 31 | 15240 | 1560008564054FL | FAIRING | KC135 | 1076500 | 765 |
| 32 | 15213 | 1560006738927FL | SPOILER | KC135 EC135 | 450000 | 322 |
| 33 | 15115 | 1560002499370FL | RUDDEVAT | KC135 | 808400 | 504 |
| 34 | 15246 | 1560008701639FL | PANEL | EC-135 | 466589 | 211 |
| 35 | 15280 | 1560008701640FL | PANEL | KC135B | 5023068 | 1300 |
| 36 | 15179 | 1560006522936FL | DOOR | KC135 | 3389900 | 1300 |
| 37 | 15226 | 1560007310564FL | TAB ASSY | KC135 | 2336586 | 1444 |
| 38 | 15129 | 1560003409347FL | FLAP | KC135 | 459600 | 234 |
| 39 | 15245 | 1560008701606FL | ELEVATOR | KC135A | 835400 | 765 |
| 40 | 15275 | 1560006577205FL | SPOILER | C135A | 2236666 | 1171 |
| 41 | 15350 | 1560010085288AW | AILERON | E3A | 489060 | 480 |
| 42 | 15144 | 1560006603965FL | DOOR | KC135C | 3323200 | 968 |
| 43 | 15276 | 1560006730065FL | SPOILER | C135T | 1083568 | 670 |
| 44 | 15203 | 1560007539152FL | TAB | KC135 | 486600 | 384 |
| 45 | 15299 | 1560006570342FL | DOOR | KC135 | 300600 | 238 |
| 46 | 15281 | 1560008701667FL | DOOR | KC135 | 1835878 | 1424 |
| 47 | 15145 | 1560006603966FL | DOOR ASS | KC135C | 275900 | 97 |
| 48 | 15142 | 1560007862634FL | STRUT | C135A | 474958 | 643 |
| 49 | 15230 | 1560007551350FL | TAB ASSY | KC135 | 5755500 | 2004 |
| 50 | 15235 | 1560003075320FL | RING | C135B | 407300 | 229 |
| 51 | 15260 | 1560009761963FL | DOOR | KC135 | 802300 | 721 |
| 52 | 15314 | 1560005088274FL | SPOILER | KC135A | 995230 | 520 |
| | | | | | 622300 | 575 |

IN

197,500 EMA

Lbs

271 K pieces

EC135 pieces

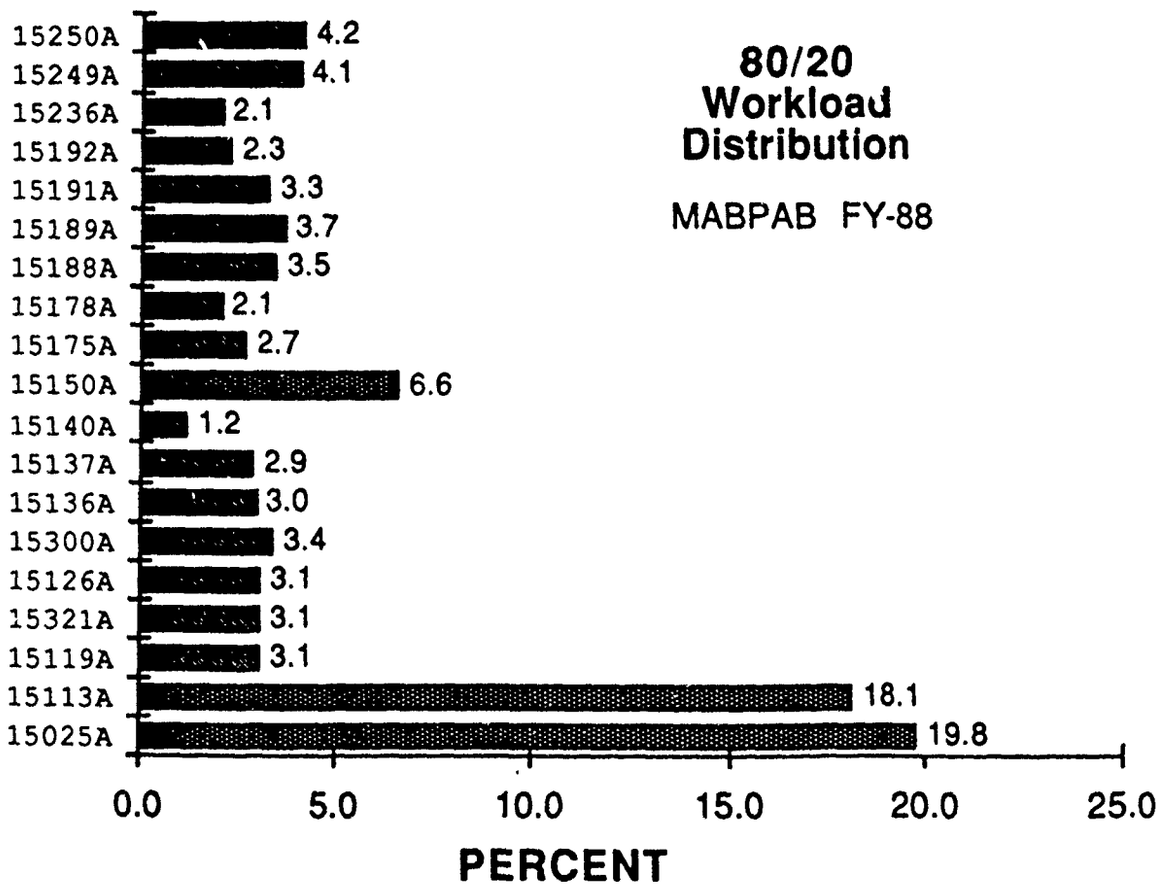
80/20
Workload
Distribution
MABPAB FY-88
15250A
15249A
15236A
15192A
15191A
15189A
15188A
15178A
15175A
15150A
15140A
15137A
15136A
15300A
15126A
15321A
15119A
15113A
15025A
4.2
4.1
2.1
2.3
3.3
3.7
3.5
2.1
2.7
6.6
1.2
2.9
3.0
3.4
3.1
3.1
3.1
18.1
19.8
0.0
5.0
10.0
15.0
20.0
25.0
PERCENT

# ENV__OP
## (For Internal Use, Not a Model Input)

ALC OC RCC MABPAB EQUIPMENT CODE

TOTAL VOLUME OF EQUIPMENT IN CU. FT.

| LIST OF PARTS BY ITEM NUMBER | SIZE/VOLUME CU. FT. | UNIT VALUE | MINIMUM | MAXIMUM | REMARKS/SOURCE |
|---|---|---|---|---|---|
| PCN<br>NSN<br>P/N | | | | | |
| PCN<br>NSN<br>P/N | | | | | |
| PCN<br>NSN<br>P/N | | | | | |
| PCN<br>NSN<br>P/N | | | | | |
| PCN<br>NSN<br>P/N | | | | | |
| PCN<br>NSN<br>P/N | | | | | |
| PCN<br>NSN<br>P/N | | | | | |
| PCN<br>NSN<br>P/N | | | | | |
| PCN<br>NSN<br>P/N | | | | | |
| PCN<br>NSN<br>P/N | | | | | |
| PCN<br>NSN<br>P/N | | | | | |
| PCN<br>NSN<br>P/N | | | | | |

NOT APPLICABLE ALL EQ
PROCESS SINGLE ITEM

LSC-20106A

# ITEM CHECKLIST
## (For Internal Use, Not a Model Input)

A-GP19C-CCA-CA-mCE
APR. 89
8 HRS/DAY
5 DAYS/WK

NAME R. Bolanos ALC OC DATE 4/9/89 RCC MABPAB SHEET 1 OF 2

| ITEM NUMBER | SPECIFY IF PCN NSN P/N | WCD NO. | WCD DATE | OPERATION PROFILE | DS/AS PROFILE | PARALLEL OPS PROFILE | HISTORICAL DATA | INDUCTION/ SELL DATE | BLANK WCD | STAMPED OFF WCD REVISIONS | STANDARD HOURS | STANDARD FLOW TIMES | PROCESS FLOW CHARTS |
|---|---|---|---|---|---|---|---|---|---|---|---|---|---|
| 15025A | PCN | 15025A | 88054 | ✓ | N/A | N/A | | 6/7 | ✓ | | ✓ | DAYS 36 | ✓ |
| 15113A | | 15113A | 88054 | ✓ | | | | | ✓ | | ✓ | 36 | ✓ |
| 15119A | | 15119A | 89073 | ✓ | | | | | | | ✓ | 33 | ✓ |
| 15321A | | " | " | ✓ | | | | | | | ✓ | 33 | ✓ |
| 15126A | | 15126A | 89073 | ✓ | | | | | | | ✓ | 33 | ✓ |
| 15300A | | " | " | ✓ | | | | | | | ✓ | 33 | ✓ |
| 15136A | | 15136A | 88205 | ✓ | | | | | ✓ | | ✓ | 34 | ✓ |
| 15137A | | " | " | ✓ | | | | | | | ✓ | 34 | ✓ |
| 15140A | | 15140A | 89073 | ✓ | | | | | | | ✓ | 21 | ✓ |
| 15150A | | 15150A | 88054 | ✓ | | | | | | | ✓ | 31 | ✓ |
| 15175A | | 15175A | 89073 | ✓ | | | | | | | ✓ | 38 | ✓ |
| 15178A | | 15178A | 88054 | ✓ | ↓ | | | | ✓ | | ✓ | 19 | ✓ |
| 15188A | | 15153A | 88055 | ✓ | ✓ | | | | | | ✓ | 35 | ✓ |
| 15189A | | " | " | ✓ | ✓ | | | | ✓ | | ✓ | 35 | ✓ |
| 15188A | | 15154A | 88055 | ✓ | | | | | ✓ | | ✓ | ✓ | ✓ |
| 15189A | | " | " | ✓ | | | | | | | ✓ | ✓ | ✓ |
| 15191A | | 15151A | 88055 | ✓ | ✓ | | | | | | ✓ | 36 | ✓ |
| 15192A | | " | " | ✓ | ✓ | | | | ✓ | | ✓ | 36 | ✓ |
| 15191A | | 15152A | 88055 | ✓ | | | | | ✓ | | ✓ | ✓ | ✓ |
| 15192A | | " | " | ✓ | | ↓ | | | ✓ | | ✓ | ✓ | ✓ |
| 15236A | ↓ | 15236A | 88054 | ✓ | ✓ | ✓ | | ↓ | ✓ | | ✓ | 44 | ✓ |

LSC 20098A

3.0 8 Hrs to 24 Hrs

# ITEM CHECKLIST
## (For Internal Use, Not a Model Input)

NAME R. BOLANOS ALC OC DATE 4/9/89 RCC MABPAB SHEET 2 OF 2

| ITEM NUMBER | SPECIFY IF NSN P/N | WCD NO. | WCD DATE | OPERATION PROFILE | DS/AS PROFILE | PARALLEL OPS PROFILE | HISTORICAL DATA | INDUCTION SELL DATE | BLANK WCD | STAMPED OFF WCD REVISIONS | STANDARD HOURS | STANDARD FLOW TIMES | PROCESS FLOW CHARTS |
|---|---|---|---|---|---|---|---|---|---|---|---|---|---|
| 15237A | PCN | 15237A | 89073 | ✓ | N/A | N/A | | 6/7 | ✓ | | ✓ | 16 | ✓ |
| 15249A | ↓ | 15249A | 88055 | ✓ | ↓ | ↓ | | ↓ | ✓ | | ✓ | 41 | ✓ |
| 15250A | ↓ | " | 88055 | ✓ | ↓ | ↓ | | ↓ | ✓ | | ✓ | 41 | ✓ |
| 15237A | ↓ | 15236B | 88069 | ✓ | ↓ | ↓ | | ↓ | ✓ | | ✓ | ✓ | |

# ITEM S .IMARY
## (For Internal Use, Not a Model Input)

NAME R. BOLANDS ALC OC DATE 4/9/89 RCC MABPAB SHEET 1 OF 2

| | ITEM NUMBER | WCD | WORKLOAD TYPE | HISTORICAL FLOW TIME * | STANDARD HOURS | EXPECTED HOURS * |
|---|---|---|---|---|---|---|
| 1 | NSN P/N 15025A | 15025A | 4 | | 163.49 | |
| 2 | NSN P/N 15113A | 15113A | | | 147.72 | |
| 3 | NSN P/N 15119A | 15119A | | | 89.76 | |
| 4 | NSN P/N 15?_1A | " | | | 90.24 | |
| 5 | NSN P/N 15126A | 15126A | | | 88.73 | |
| 6 | NSN P/N 15300A | " | | | 98.31 | |
| 7 | NSN P/N 15136A | 15136A | | | 79.18 | |
| 8 | NSN P/N 15137A | " | | | 79.18 | |
| 9 | NSN P/N 15140A | 15140A | | | 51.65 | |
| 10 | NSN P/N 15150A | 15150A | | | 85.15 | |
| 11 | NSN P/N 15175A | 15175A | | | 73.86 | |
| 12 | NSN P/N 15178A | 15178A | ↓ | | 18.97 | |

* NOTE: HISTORICAL FLOW TIME WILL BE GENERATED BY DATA PROCESSING. IF NO HISTORY IS COLLECTED ON WCD DATA COLLECTION SYSTEM, THIS INFORMATION MUST BE OBTAINED ON-SITE. EXPECTED HOURS WILL BE GENERATED FROM OPS. PROFILES BY DATA PROCESSING.

# ITEM SUMMARY
## (For Internal Use, Not a Model Input)

NAME R. BOLANOS ALC OC DATE 4/9/89 RCC MABPAB SHEET 2 OF 2

| | ITEM NUMBER | WCD | WORKLOAD TYPE | HISTORICAL FLOW TIME ✱ | STANDARD HOURS | EXPECTED HOURS ✱ |
|---|---|---|---|---|---|---|
| 13 | PCN NSN P/N 15188A | 15153A | 4 | | 120.73 | |
| 14 | PCN NSN P/N 15189A | " | | | 120.73 | |
| 15 | PCN NSN P/N 15188A | 15154A | | | 15.00 | |
| 16 | PCN NSN P/N 15189A | " | | | 15.00 | |
| 17 | PCN NSN P/N 15191A | 15151A | | | 118.72 | |
| 18 | PCN NSN P/N 15192A | " | | | 118.72 | |
| 19 | PCN NSN P/N 15191A | 15152A | | | 15.00 | |
| 20 | PCN NSN P/N 15192A | " | | | 15.00 | |
| 21 | PCN NSN P/N 15236A | 15236A | | | 121 58 | |
| 22 | PCN NSN P/N 15237A | 15237A | | | 28.60 | |
| 23 | PCN NSN P/N 15249A | 15249A | | | 110.53 | |
| 24 | PCN NSN P/N 15250A | " | | | 110.99 | |

✱ NOTE: HISTORICAL FLOW TIME WILL BE GENERATED BY DATA PROCESSING. IF NO HISTORY IS COLLECTED ON WCD DATA COLLECTION SYSTEM, THIS INFORMATION MUST BE OBTAINED ON-SITE. EXPECTED HOURS WILL BE GENERATED FROM OPS. PROFILES BY DATA PROCESSING.

| | | | | | | | |
|---|---|---|---|---|---|---|---|
| 25 | PCN | 15237A | 15236B | 4 | | 28.60 | |

# RCC CHECKLIST
## (For Internal Use, Not a Model Input)

NAME R. BOLANOS ALC OC DATE 4/9/89 SHEET 1 OF 1

| | DATABASE DOCUMENTATION | | | | | | | | PROCESS CHARACTERIZATION | | | |
|---|---|---|---|---|---|---|---|---|---|---|---|---|
| RCC | FACILITY LAYOUT | EQUIPMENT | WORK FORCE | REPAIR WORK TECHNOLOGY | WORKLOAD MIX & VOLUME | MATERIAL HANDLING | STORAGE | FLOW CHARTS | EQUIPMENT PROFILE | MANPOWER PROFILE | WORKLOAD PROFILE | 80/20 ANALYSIS |
| MABPAB | ✓ | ✓ | ✓ | ✓ | ✓ | | | ✓ | ✓ | ✓ | ✓ | ✓ |
| | | | | | | | | | | | | |
| | | | | | | | | | | | | |
| | | | | | | | | | | | | |
| | | | | | | | | | | | | |
| | | | | | | | | | | | | |
| | | | | | | | | | | | | |
| | | | | | | | | | | | | |
| | | | | | | | | | | | | |
| | | | | | | | | | | | | |
| | | | | | | | | | | | | |
| | | | | | | | | | | | | |
| | | | | | | | | | | | | |
| | | | | | | | | | | | | |
| | | | | | | | | | | | | |
| | | | | | | | | | | | | |
| | | | | | | | | | | | | |
| | | | | | | | | | | | | |
| | | | | | | | | | | | | |
| | | | | | | | | | | | | |
| | | | | | | | | | | | | |

LSC-20099A

# MANPOWER PROFILE

NAME R Bolanos ALC OC DATE 4/11/89 RCC MABPAB SHEET 1 OF 2

| SKILL CODE/LEVEL | JOB DESCRIPTION | QUARTER | QUANTITY AVAILABLE | | | | | | | | | MANPOWER AVAILABLE (HOURS) | | | | | | | | | ALTERNATE SKILL CODE/LEVEL |
|---|---|---|---|---|---|---|---|---|---|---|---|---|---|---|---|---|---|---|---|---|---|
| | | | WORK WEEK | | | WEEKEND | | | HOLIDAYS | | | WORK WEEK | | | WEEKEND | | | HOLIDAYS | | | |
| | | | 1 | 2 | 3 | 1 | 2 | 3 | 1 | 2 | 3 | 1 | 2 | 3 | 1 | 2 | 3 | 1 | 2 | 3 | |
| AS 10 | LEFT HAND SIDE COWL | 1 | 15 | | | | | | | | | 5.6 | | | | | | | | | BS10, CS10, DS10 ES10, FS10. |
| | | 2 | 7 | | | | | | | | | 5.7 | | | | | | | | | |
| | | 3 | 4 | | | | | | | | | 5.9 | | | | | | | | | |
| | | 4 | 8 | | | | | | | | | 5.8 | | | | | | | | | |
| BS 10 | RIGHT HAND SIDE COWL | 1 | 14 | | | | | | | | | 5.6 | | | | | | | | | AS10, CS10, DS10 ES10, FS10 |
| | | 2 | 15 | | | | | | | | | 5.7 | | | | | | | | | |
| | | 3 | 22 | | | | | | | | | 5.9 | | | | | | | | | |
| | | 4 | 19 | | | | | | | | | 5.8 | | | | | | | | | |
| CS 10 | NOSE COWL | 1 | 10 | | | | | | | | | 5.6 | | | | | | | | | AS10, BS10, DS10, ES10, FS10 |
| | | 2 | 11 | | | | | | | | | 5.7 | | | | | | | | | |
| | | 3 | 15 | | | | | | | | | 5.9 | | | | | | | | | |
| | | 4 | 10 | | | | | | | | | 5.8 | | | | | | | | | |
| DS 10 | FLAPS | 1 | 19 | | | | | | | | | 5.6 | | | | | | | | | AS10, BS10, CS10, ES10, FS10 |
| | | 2 | 10 | | | | | | | | | 5.7 | | | | | | | | | |
| | | 3 | 9 | | | | | | | | | 5.9 | | | | | | | | | |
| | | 4 | 2 | | | | | | | | | 5.8 | | | | | | | | | |
| ES 10 | FLIGHT CONTROL | 1 | 23 | | | | | | | | | 5.6 | | | | | | | | | AS10, BS10, CS10 DS10, FS10 |
| | | 2 | 26 | | | | | | | | | 5.7 | | | | | | | | | |
| | | 3 | 35 | | | | | | | | | 5.9 | | | | | | | | | |
| | | 4 | 27 | | | | | | | | | 5.8 | | | | | | | | | |

LSC 20003

# MANPOWER PROFILE

NAME R. BOLANOS ALC OC DATE 4/11/89 RCC MABPAB SHEET 2 OF 2

| SKILL CODE/LEVEL | JOB DESCRIPTION | QUARTER | QUANTITY AVAILABLE | | | | | | | | | MANPOWER AVAILABLE (HOURS) | | | | | | | | | ALTERNATE SKILL CODE/LEVEL |
|---|---|---|---|---|---|---|---|---|---|---|---|---|---|---|---|---|---|---|---|---|---|
| | | | WORK WEEK | | | WEEKEND | | | HOLIDAYS | | | WORK WEEK | | | WEEKEND | | | HOLIDAYS | | | |
| | | | 1 | 2 | 3 | 1 | 2 | 3 | 1 | 2 | 3 | 1 | 2 | 3 | 1 | 2 | 3 | 1 | 2 | 3 | |
| FS 10 | Misc. | 1 | 29 | | | | | | | | | 5.6 | | | | | | | | | A≤10 B≤10, C≤10 D≤10, E≤10 |
| | | 2 | 28 | | | | | | | | | 5.7 | | | | | | | | | |
| | | 3 | 34 | | | | | | | | | 5.9 | | | | | | | | | |
| | | 4 | 30 | | | | | | | | | 5.8 | | | | | | | | | |
| GS 10 | | 1 | | 8 | | | | | | | | | 5.6 | | | | | | | | A≤10, B≤10, C≤10 D≤10, E≤10, F≤10 |
| | | 2 | | 8 | | | | | | | | | 5.7 | | | | | | | | |
| | | 3 | | 9 | | | | | | | | | 5.9 | | | | | | | | |
| | | 4 | | 8 | | | | | | | | | 5.8 | | | | | | | | |
| | | 1 | | | | | | | | | | | | | | | | | | | |
| | | 2 | | | | | | | | | | | | | | | | | | | |
| | | 3 | | | | | | | | | | | | | | | | | | | |
| | | 4 | | | | | | | | | | | | | | | | | | | |
| | | 1 | | | | | | | | | | | | | | | | | | | |
| | | 2 | | | | | | | | | | | | | | | | | | | |
| | | 3 | | | | | | | | | | | | | | | | | | | |
| | | 4 | | | | | | | | | | | | | | | | | | | |
| | | 1 | | | | | | | | | | | | | | | | | | | |
| | | 2 | | | | | | | | | | | | | | | | | | | |
| | | 3 | | | | | | | | | | | | | | | | | | | |
| | | 4 | | | | | | | | | | | | | | | | | | | |

419 33

LSC 2000

# MANPOWER PROFILE

ALC _____ DATE _____ RCC LAKEPARK SHEET 1 OF 2

ALL ALTERNATE CODES Have 08 : 10

| SKILL CODE/LEVEL | JOB DESCRIPTION | QUARTER | QUANTITY AVAILABLE | | | | | | | | | MANPOWER AVAILABLE (HOURS) | | | | | | | | | ALTERNATE SKILL CODE/LEVEL |
|---|---|---|---|---|---|---|---|---|---|---|---|---|---|---|---|---|---|---|---|---|---|
| | | | WORK WEEK | | | WEEKEND | | | HOLIDAYS | | | WORK WEEK | | | WEEKEND | | | HOLIDAYS | | | |
| | | | 1 | 2 | 3 | 1 | 2 | 3 | 1 | 2 | 3 | 1 | 2 | 3 | 1 | 2 | 3 | 1 | 2 | 3 | |
| AS 08 | LEFT HAND SIDE COWL | 1 | 4 | | | | | | | | | 5.6 | | | | | | | | | BS, CS, DS ES, FS, GS AS-10 08 : 10 |
| | | 2 | 2 | | | | | | | | | 5.7 | | | | | | | | | |
| | | 3 | 1 | | | | | | | | | 5.9 | | | | | | | | | |
| | | 4 | 2 | | | | | | | | | 5.8 | | | | | | | | | |
| BS 08 | RIGHT HAND SIDE COWL | 1 | 5 | | | | | | | | | 5.6 | | | | | | | | | AS, CS, DS ES, FS, GS 08 : 10 |
| | | 2 | 5 | | | | | | | | | 5.7 | | | | | | | | | |
| | | 3 | 7 | | | | | | | | | 5.9 | | | | | | | | | |
| | | 4 | 4 | | | | | | | | | 5.8 | | | | | | | | | |
| CS 08 | NOSE COWL | 1 | 3 | | | | | | | | | 5.6 | | | | | | | | | AS, BS, DS ES, FS, GS 08 : 10 |
| | | 2 | 3 | | | | | | | | | 5.7 | | | | | | | | | |
| | | 3 | 5 | | | | | | | | | 5.9 | | | | | | | | | |
| | | 4 | 3 | | | | | | | | | 5.8 | | | | | | | | | |
| DS 08 | FLAPS | 1 | 4 | | | | | | | | | 5.6 | | | | | | | | | AS, BS, CS, ES, FS, GS 08 : 10 |
| | | 2 | 3 | | | | | | | | | 5.7 | | | | | | | | | |
| | | 3 | 1 | | | | | | | | | 5.9 | | | | | | | | | |
| | | 4 | 1 | | | | | | | | | 5.8 | | | | | | | | | |
| ES 08 | FLIGHT CONTROL | 1 | 8 | | | | | | | | | 5.6 | | | | | | | | | AS, BS, CS DS, FS, GS 08 : 10 |
| | | 2 | 8 | | | | | | | | | 5.7 | | | | | | | | | |
| | | 3 | 12 | | | | | | | | | 5.9 | | | | | | | | | |
| | | 4 | 9 | | | | | | | | | 5.8 | | | | | | | | | |

ESC 20001

# MANPOWER PROFILE

... R. KOIANOS ALC DC DATE 4/[illegible] RCC [illegible] SHEET 2 OF 2

| SKILL CODE/LEVEL | JOB DESCRIPTION | QUARTER | QUANTITY AVAILABLE | | | | | | | | | MANPOWER AVAILABLE (HOURS) | | | | | | | | | ALTERNATE SKILL CODE/LEVEL |
|---|---|---|---|---|---|---|---|---|---|---|---|---|---|---|---|---|---|---|---|---|---|
| | | | WORK WEEK | | | WEEKEND | | | HOLIDAYS | | | WORK WEEK | | | WEEKEND | | | HOLIDAYS | | | |
| | | | 1 | 2 | 3 | 1 | 2 | 3 | 1 | 2 | 3 | 1 | 2 | 3 | 1 | 2 | 3 | 1 | 2 | 3 | |
| FS 08 | Misc. | 1 | 9 | | | | | | | | | 5.0 | | | | | | | | | AS, BS, CS DS, ES, GS |
| | | 2 | 9 | | | | | | | | | [illegible] | | | | | | | | | |
| | | 3 | 11 | | | | | | | | | [illegible] | | | | | | | | | |
| | | 4 | 10 | | | | | | | | | [illegible] | | | | | | | | | 08 & 10 |
| GS 08 | | 1 | | 1 | | | | | | | | | 5.6 | | | | | | | | LS, ES, CS DS, ES FS |
| | | 2 | | 1 | | | | | | | | | 5.7 | | | | | | | | |
| | | 3 | | 1 | | | | | | | | | 5.9 | | | | | | | | |
| | | 4 | | 1 | | | | | | | | | 5.8 | | | | | | | | 08 & 10 |
| | | 1 | | | | | | | | | | | | | | | | | | | |
| | | 2 | | | | | | | | | | | | | | | | | | | |
| | | 3 | | | | | | | | | | | | | | | | | | | |
| | | 4 | | | | | | | | | | | | | | | | | | | |
| | | 1 | | | | | | | | | | | | | | | | | | | |
| | | 2 | | | | | | | | | | | | | | | | | | | |
| | | 3 | | | | | | | | | | | | | | | | | | | |
| | | 4 | | | | | | | | | | | | | | | | | | | |
| | | 1 | | | | | | | | | | | | | | | | | | | |
| | | 2 | | | | | | | | | | | | | | | | | | | |
| | | 3 | | | | | | | | | | | | | | | | | | | |
| | | 4 | | | | | | | | | | | | | | | | | | | |

133 4

LSC 20003

# MANPOWER PR[illegible]FILE

NAME [illegible] ALC [illegible] DATE 4/11/[illegible] RCC MABPAB SHEET 1 OF 2

ALL ALTERNATE CODES HAVE 05 08 & 10

| SKILL CODE/LEVEL | JOB DESCRIPTION | QUARTER | QUANTITY AVAILABLE: WORK WEEK 1 | WORK WEEK 2 | WORK WEEK 3 | WEEKEND 1 | WEEKEND 2 | WEEKEND 3 | HOLIDAYS 1 | HOLIDAYS 2 | HOLIDAYS 3 | MANPOWER AVAILABLE (HOURS): WORK WEEK 1 | WORK WEEK 2 | WORK WEEK 3 | WEEKEND 1 | WEEKEND 2 | WEEKEND 3 | HOLIDAYS 1 | HOLIDAYS 2 | HOLIDAYS 3 | ALTERNATE SKILL CODE/LEVEL |
|---|---|---|---|---|---|---|---|---|---|---|---|---|---|---|---|---|---|---|---|---|---|
| AS 05 | LEFT HAND SIDE COWL | 1 | 6 | | | | | | | | | 5.6 | | | | | | | | | BS, CS, DS |
| | | 2 | 2 | | | | | | | | | 5.7 | | | | | | | | | ES, FS, GS |
| | | 3 | 2 | | | | | | | | | 5.9 | | | | | | | | | |
| | | 4 | 3 | | | | | | | | | 5.8 | | | | | | | | | 05, 08 & 10 |
| BS 05 | RIGHT HAND SIDE COWL | 1 | 6 | | | | | | | | | 5.6 | | | | | | | | | AS, CS, DS |
| | | 2 | 6 | | | | | | | | | 5.7 | | | | | | | | | ES, FS, GS |
| | | 3 | 8 | | | | | | | | | 5.9 | | | | | | | | | |
| | | 4 | 7 | | | | | | | | | 5.8 | | | | | | | | | 05, 08 & 10 |
| CS 05 | NOSE COWL | 1 | 4 | | | | | | | | | 5.6 | | | | | | | | | AS, BS, DS |
| | | 2 | 4 | | | | | | | | | 5.7 | | | | | | | | | ES, FS, GS |
| | | 3 | 5 | | | | | | | | | 5.9 | | | | | | | | | |
| | | 4 | 4 | | | | | | | | | 5.8 | | | | | | | | | 05, 08 & 10 |
| DS 05 | FLAPS | 1 | 7 | | | | | | | | | 5.6 | | | | | | | | | AS, BS, CS, |
| | | 2 | 4 | | | | | | | | | 5.7 | | | | | | | | | ES, FS, GS |
| | | 3 | 1 | | | | | | | | | 5.9 | | | | | | | | | |
| | | 4 | 1 | | | | | | | | | 5.8 | | | | | | | | | 05, 08 & 10 |
| ES 05 | FLIGHT CONTROL | 1 | 9 | | | | | | | | | 5.6 | | | | | | | | | AS, BS, CS |
| | | 2 | 10 | | | | | | | | | 5.7 | | | | | | | | | DS, FS, GS |
| | | 3 | 13 | | | | | | | | | 5.9 | | | | | | | | | |
| | | 4 | 10 | | | | | | | | | 5.8 | | | | | | | | | 05, 08 & 10 |

LSC 20093

# MANPOWER PROFILE

WING R 30'ANOS ALC OC DATE 4/11/89 RCC MABPAB SHEET 2 OF 2

| SKILL CODE/LEVEL | JOB DESCRIPTION | QUARTER | QUANTITY AVAILABLE | | | | | | | | | MANPOWER AVAILABLE (HOURS) | | | | | | | | | ALTERNATE SKILL CODE/LEVEL |
|---|---|---|---|---|---|---|---|---|---|---|---|---|---|---|---|---|---|---|---|---|---|
| | | | WORK WEEK | | | WEEKEND | | | HOLIDAYS | | | WORK WEEK | | | WEEKEND | | | HOLIDAYS | | | |
| | | | 1 | 2 | 3 | 1 | 2 | 3 | 1 | 2 | 3 | 1 | 2 | 3 | 1 | 2 | 3 | 1 | 2 | 3 | |
| FS05 | Misc. | 1 | 11 | | | | | | | | | 5.6 | | | | | | | | | AS, BS, CS DS, ES, GS |
| | | 2 | 11 | | | | | | | | | 5.7 | | | | | | | | | |
| | | 3 | 12 | | | | | | | | | 5.9 | | | | | | | | | |
| | | 4 | 11 | | | | | | | | | 5.8 | | | | | | | | | 05, 08 & 10 |
| GS05 | | 1 | | 4 | | | | | | | | | 56 | | | | | | | | AS, BS, CS DS, ES, FS |
| | | 2 | | 5 | | | | | | | | | 5.7 | | | | | | | | |
| | | 3 | | 6 | | | | | | | | | 5.9 | | | | | | | | |
| | | 4 | | 5 | | | | | | | | | | | | | | | | | 05, 08 & 10 |
| | | 1 | | | | | | | | | | | | | | | | | | | |
| | | 2 | | | | | | | | | | | | | | | | | | | |
| | | 3 | | | | | | | | | | | | | | | | | | | |
| | | 4 | | | | | | | | | | | | | | | | | | | |
| | | 1 | | | | | | | | | | | | | | | | | | | |
| | | 2 | | | | | | | | | | | | | | | | | | | |
| | | 3 | | | | | | | | | | | | | | | | | | | |
| | | 4 | | | | | | | | | | | | | | | | | | | |
| | | 1 | | | | | | | | | | | | | | | | | | | |
| | | 2 | | | | | | | | | | | | | | | | | | | |
| | | 3 | | | | | | | | | | | | | | | | | | | |
| | | 4 | | | | | | | | | | | | | | | | | | | |

157 22

# WORKLOA PROFILE

NAME R. Bolanos ALC OC DATE 4/7/89 RCC MABPAB SHEET 1 OF 2

| | ITEM NUMBER | AIRCRAFT MODEL | WCD | WORKLOAD TYPE | FLOATING STOCK Avail For Use | ACTUAL PRODUCTION BY QUARTER G019C G004L G037L 1 | 2 | 3 | 4 | NO. OF ENVELOP UNITS | MAXIMUM W I P. | STANDARD HOURS |
|---|---|---|---|---|---|---|---|---|---|---|---|---|
| 1 | NSN P/N 15025A | C-135 | 15025A | 4 | | 56 | 55 | 54 | 75 | | 15 | 163.49 |
| 2 | NSN P/N 15113A | | 15113A | 4 | | 60 | 60 | 53 | 70 | | 22 | 147.72 |
| 3 | NSN P/N 15119A R | | 15119A | 4 | | 13 | 16 | 20 | 20 | | 4 | 89.76 |
| 4 | NSN P/N 15321A L | | " | 4 | | 13 | 16 | 20 | 20 | | 4 | 98.24 |
| 5 | NSN P/N 15126A | | 15126A | 4 | | 13 | 16 | 20 | 20 | | 5 | 88.73 |
| | NSN P/N 15333A | | " | 4 | | 13 | 16 | 20 | 20 | | 5 | 98.31 |
| 7 | NSN P/N 15136A | | 15136A | 4 | | 13 | 18 | 23 | 22 | | 4 | 79.18 |
| 8 | NSN P/N 15137A | | " | 4 | | 13 | 16 | 23 | 21 | | 4 | 79.18 |
| 9 | NSN P/N 15140A MCC | | 15140A | 4 | | 1 | 0 | 4 | 40 | | 8 | 51.65 |
| 10 | NSN P/N 15150A | | 15150A | 4 | | 25 | 25 | 38 | 66 | | 17 | 85.15 |
| 11 | NSN P/N 15175A BTC | | 15175A | 4 | | 25 | 12 | 8 | 26 | | 3 | 73.86 |
| 12 | NSN P/N 15178A CCT | | 15178A | 4 | | 36 | 50 | 59 | 75 | | 7 | 18.97 |
| 13 | NSN P/N 15188A | | 15153A | 4 | | 13 | 13 | 15 | 17 | | 8 | 120.73 |

163.5

LSC-20096B

# WORKLO..D PROFILE

NAME R. BOLANOS ALC OC DATE 4/7/89 RCC MABPAB SHEET 2 OF 2

| | ITEM NUMBER | AIRCRAFT MODEL | WCD | WORKLOAD TYPE | FLOATING STOCK | ACTUAL PRODUCTION BY QUARTER 1 | 2 | 3 | 4 | NO. OF ENVELOP UNITS | MAXIMUM W I P. | STANDARD HOURS |
|---|---|---|---|---|---|---|---|---|---|---|---|---|
| 14 | NSN P/N 15189A | C-135 | 15153A | 4 | | 13 | 15 | 15 | 17 | | 8 | 120.73 |
| 15 | NSN P/N 15188A | | 15154A | 4 | 2 | | | | | | | 15.00 ✓ |
| 16 | NSN P/N 15189A | | " | 4 | 2 | | | | | | | 15.00 ✓ |
| 17 | NSN P/N 1519 A | | 15151A | 4 | | 11 | 11 | 16 | 17 | | 7 | 118.72 |
| 18 | NSN P/N 1519 2A | | " | 4 | | 6 | 6 | 10 | 17 | | 8 | 118.72 |
| 19 | NSN P/N 1519 1A | | 15152A | 4 | 2 | | | | | | | 15.00 |
| 20 | NSN P/N 15192A | | " | 4 | 2 | | | | | | | 15.00 |
| 21 | NSN P/N 15236A | | 15236A | 4 | | 6 | 10 | 9 | 9 | | 4 | 121.58 |
| 22 | NSN P/N 15237A | | 15237A | 4 | | | | | | | 1 | 28.60 |
| 23 | NSN P/N 15249A | | 15249A | 4 | | 13 | 18 | 23 | 20 | | 3 | 110.55 |
| 24 | NSN P/N 15250A | | " | 4 | | 13 | 18 | 23 | 20 | | 3 | 110.99 |
| 25 | NSN P/N 15236A | | 15236B | 4 | 2 | | | | | | 1 | 28.60 |
| | NSN P/N | | | | | | | | | | | |

DEPARTMENT OF THE AIR FORCE
HEADQUARTERS OKLAHOMA CITY AIR LOGISTICS CENTER (AFLC)
TINKER AIR FORCE BASE OKLAHOMA 73145

REPLY TO ATTN OF: MAW (TI) 19 Jan 89

SUBJECT: RCC Workload Data To Support Technology Insertion (TI)

TO: MABE

control

1. McDonnell Douglas has requested that the attached part numbers for each identified RCC be reviewed to verify that they do infact account for 80 percent of the workload for that RCC. It has alos been requeted that the columns on the attached forms be filled in to reflect the workload for FY88 per quarter.

2. This information needs to be provided ASAP so that it may be telefaxed to McDonnell Douglas in St Louis.

GENE W. LEITERMAN
OC-ALC TI Program Manager

1 Atch
Listing

BS
2/1

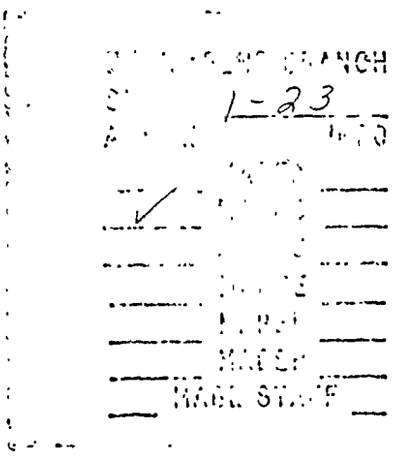


COMBAT STRENGTH THROUGH LOGISTICS

| | MABPAB | MABPAB LABOR STD | FY [illegible] D BY [illegible]RTER ☆ 1st # UNITS | [illegible] # UNITS | [illegible] # UNITS | 4th # UNITS |
|---|---|---|---|---|---|---|
| 1 | [illegible] | [illegible]3.5 | 56 | [illegible] | [illegible]4 | 75 |
| 2 | [illegible] | 55.7 | 60 | 60 | 53 | 70 |
| 3 | [illegible] | 92.4 | 25 | [illegible] | [illegible] | 66 |
| 4 | [illegible] | 193.9 | 13 | 15 | 15 | 17 |
| 5 | [illegible] | [illegible]9 | 13 | 13 | 15 | 17 |
| 6 | [illegible] | 201.9 | 11 | 11 | 16 | 17 |
| 7 | [illegible] | 110.5 | 13 | 18 | [illegible]3 | 20 |
| 8 | [illegible] | 110.5 | 13 | [illegible] | [illegible] | [illegible] |
| 9 | 15192 | 201.8 | 6 | 6 | 10 | 17 |
| 10 | [illegible] | 98.3 | 13 | 16 | 20 | 20 |
| 11 | 15136 | 79.2 | 13 | 18 | 23 | 22 |
| 12 | [illegible] | 90.2 | 13 | 16 | 20 | 20 |
| 13 | [illegible] | 99.7 | 13 | 16 | 20 | 20 |
| 14 | 15119 | 89.8 | 13 | 16 | 20 | 20 |
| 15 | [illegible] | [illegible] | [illegible] | [illegible] | [illegible] | [illegible] |
| 16 | 15[illegible]175 | 74.9 | 25 | 12 | [illegible] | 26 |
| 17 | 15178 | 64.0 | 36 | 50 | 59 | 75 |
| 18 | 15276 | 142.6 | 6 | 10 | 9 | 9 |
| 19 | 15140 | 58.7 | 1 | 0 | 4 | 40 |

☆ IAW A-GØ19C-CAA-CA-MCE
DATED 16 JUN 1988

CPCR Pedele
Entered 11-2-88 O

# MABPAB FIXTURES

TI DELVP. CODES
FLIGHT CONTROLS

| EQUIP CODE NO. | NAME | PART NO. | QTY. | APPLICA |
|---|---|---|---|---|
| F 335-01 | FILLET FLAP | SC65-1062T1 | 1 | E3A/135 |
| 02 | RUDDER | 590CJ1130 | 1 | E3A/135 |
| FE3A 01 | INBD FLAP | SC65-1063T1 | 1 | E3A |
| 02 | L'H/RH ELEVATOR | SC5-96190T1 | | E3A |
| F135- 01 | L'H/RH ELEVATOR | 590CJ1120 | 1 | 135 |
| F 335-03 | INBD AILERON | 590CJ1010 | 3 | E3A/135 |
| " 04 | OTBD MAIN FLAP | 590CJ1030 | 1 | E3A/135 |
| F 135-02 | INBD MAIN FLAP | 590CJ1020 | 1 | 135 |
| F 335-05 | OTBD SPOILER | 590CJ1060 | 1 | E3A/135 |
| 07 | OTBD AILERON | 590CJ1000 | 3 | E3A/135 |
| | DOORS | | | |
| F 335-08 | OTBD MLG | 590CJ1110 | 4 | E3A/135 |
| 09 | INBD MFG | 590CJ1100 | 4 | E3a/135 |
| | MISC | | | |
| F 135-03 | Hog Nose Fairing | 65-10607-46 | 1 | 135 |
| 04 | OTBD ENG STRUT | 590CJ1150 | 1 | 135 |
| 05 | INBD ENG STRUT | 590CJ1140 | 1 | 135 |
| 06 | BOTTOM PANEL TF33 P9 | FAJ64-8327-621 | 1 | 135 |
| 07 | TAIL CONE | 7627259 | 1 | 135 |
| 08 | KNEE CAP FAIRING | TJ5-85654 | 1 | 135 |
| 09 | BOOM POD FAIRING | | 1 | 135 |
| 10 | NOSE WHEEL FAIRING | 2FAJ5-73139-1 | 1 | 135 |
| 11 | NOSE WHEEL FAIRING | FRJ5-73139-1 | 1 | 135 |
| 12 | NOSE WHEEL FAIRING | FAJ5-73139-1 | 1 | 135 |
| 18 | BOOM TAIL CONE | 600CJ809 | 3 | 135 |
| | COWLING | | | |
| F33A-03 | RH SIDE COWL | SC65-2549T | 1 | E3A |
| 04 | LH SIDE COWL | SC65-2549T1 | 1 | E3A |
| F135-13 | RH SIDE COWL J57 | 3AJ5-85638 | 2 | 135 |
| 14 | LH SIDE COWL J57 | 3AJ5-85637 | 2 | 135 |
| 15 | RH SIDE COWL TF33P5 | 0C75-64-8327-488 | 1 | 135 |
| 16 | L'H SIDE COWL TF33P5 | 0C75-64-8327-487 | 1 | 135 |
| FE3A- 05 | NOSE COWL | 204-70099-3ASMJ | 1 | E3A |
| 06 | NOSE COWL | 204-70099-TRMJ | 1 | E3A |
| F135 -17 | NOSE COWL J57 | AJ5-85655 | 1 | 135 |

Rqmt 736-5265
OC.

B-52
MABPFF FIXTURES

TI DEVL. CODES

| EQUIP. CODE NO. | NAME | PART NO. | QTY |
|---|---|---|---|
| FB 52-01 | ELEV/RUDDER BALANCE | RP04G | 1 |
| 02 | BOMB BAY DOOR (LARGE) | FME35-30600-3 | 2 |
| 03 | BOMB BAY DOOR (LARGE) | FME35-30600-1 | 2 |
| 04 | BOMB BAY DOOR (LARGE) | FME35-30600-2 | 2 |
| 05 | BOMB BAY DOOR (SMALL) | AJ5-48467-3 | 1 |
| 06 | BOMB BAY DOOR (SMALL) | AJ5-46867-4 | 2 |
| 07 | BOMB BAY DOOR (SMALL) | AJ5-46868-28 | 1 |
| 08 | BOMB BAY DOOR (SMALL) | AJ5-46868-27 | 1 |
| FB 52-09 | BOMB BAY DOOR (SMALL) | AJ5-46867-3 | 1 |

## MABPAB EQUIPMENT

| EQUIP. CODE NO. | NAME | MODEL | QUANTITY |
|---|---|---|---|
| E 135-01 | Bending MACHINE (HAND) | 416 | 1 |
| " 02 | LARGE BAND SAWS | | 2 |
| " 03 | ROTEX PUNCH PRESS | | 1 |
| " 04 | DRILL' (FLOOR MODEL) | 1200-118 | 1 |
| " 05 | GRINDER FLOOR MODEL, (2WHEEL ELECT) | | 1 |
| " 06 | PRESS BRAKE (CHICAGO STEEL CO.) | 80023 | 1 |
| " 07 | POWER SQUARING MACHINE | 002741 | 1 |
| " 08 | PRESS BRAKE | 4560G | 1 |
| " 09 | SMALL METAL SHEAR | 241-C | 1 |
| " 10 | SMALL DRILL PRESS | | 1 |
| " 11 | GRINDER 1WHEEL,(FLOOR MODEL) | WF6566 | 1 |
| " 12 | PUNCH PRESS | P41P | 1 |
| " 13 | SANDER (BELT) FLOOR MOD. | | 1 |
| " 15 | BENDING MACHINE (HAND) | BB-316 | 1 |

MABPFF EQUIPMENT

| EQUIP. CODE NO. | NAME | MODEL #TYPE | QTY. |
|---|---|---|---|
| EB 52-01 | DOUBLE SANDER DISK (FLOOR MODEL) | | 1 |
| 02 | DRILL PRESS (FLOOR MODEL) | | 4 |
| 03 | GRINDING MACHINE | WISSOTA E8M | 1 |
| 04 | WELDER | MILLER 330ST | 1 |
| 05 | BRAKE, MECH | | 1 |
| 06 | BRAKE, MECH FORMING ROLLER | 0617 | 2 |
| 07 | BRAKE, HAND | NATIONAL | 2 |
| 08 | METAL STREACHER (FLOOR MOD) | | 1 |
| 09 | PRESS ARBOR | FAMCO | 2 |
| 10 | PUNCH, MECH | ROTEX | 1 |
| 11 | POWER SHEAR | MASPERI CM500A | 1 |
| 12 | DIMPLER | 300 | 1 |
| 13 | BRAKE PRESS | 65M75 | 1 |
| 14 | DOALL SAW | 3613-2 | 1 |

SKILL CODES

MABPAB

| | |
|---|---|
| _____*AS | LEFT HAND SIDE COWL |
| _____*BS | RIGHT HAND SIDE COWL |
| _____*CS | NOSE COWL |
| _____*DS | FLAPS |
| _____*ES | FLIGHT CONTROLS |
| _____*FS | MISC |

MABPFF

| | |
|---|---|
| _____*AS | SPOILERS, HATCHES, TIP GREAR, POP-UP ANTENNA, SUPPLY B/B DOORS |
| _____*WS | FLAPS, RUDDERS, ELEVATORS. |
| _____*YS | NOSE COWL, SIDE COWL |
| _____*3S | PDM |

MABPCA

| | |
|---|---|
| _____*WL | EQUIPMENT CLEANERS |

MABPCB

| | |
|---|---|
| _____*B3 | PAINTERS |

MABPCD

| | |
|---|---|
| _____*MQ | MOVERS |
| _____*CQ | CRANE OPERATORS |
| _____*EQ | CHECKERS |

| | |
|---|---|
| AA | SYSTEMS (ELECTRIC) |

1.0 1.5
90 .5 QUIT 7

# EQUIPMENT PROFILE

[illegible] L. MULLINAX ALC OC TAFE DATE 4/13 89 RCC MABPAB SHEET 1 OF 2

| EQUIPMENT CODE | EQUIPMENT TYPE/DESCRIPTION | QUANTITY PER SHIFT 1st | 2nd | 3rd | DOWNTIME PREVENTIVE MAINT FREQ. | SHIFT | DOWN TIME | UNSCHEDULED BREAKDOWN REPAIR TIME MTBF | MTTR | PERCENT USED FOR OTHER RCCs (e.g. TIME NOT AVAILABLE) | ENVELOP UNITS MIN | MAX | ALTERNATE EQUIPMENT CODE | SOURCE |
|---|---|---|---|---|---|---|---|---|---|---|---|---|---|---|
| E135-01 | BENDING MACHINE (HAND) MODEL 416 111171 | 1 | | | 3-0090 DAYS | 1 | .2 | | | 0 | | | | PREVENTIVE AFLC Form 170 [illegible] UNSCHEDULED |
| E135-02 | LARGE BAND SAWS 1-AF 200631 2-OC-2982 | 1 | | | 2-1000 HRS 3-0090 DAY | 1 | .5 .5 | | | 0 | | | | |
| E135-03 | ROTEX PUNCH PRESS OC-5512 | 1 | | | 2-1000 HRS 3-0090 DAYS 3-1000 HRS | 1 | .5 .5 1.0 | | | 0 | | | | |
| E135-04 | DRILL (FLOOR MODEL) 1200-118 LELAND GIFFORD 801122 | 1 | | | 3-1000 HRS | 1 | .5 | | | 0 | | | | |
| E135-05 | GRINDER FLOOR MODEL - (2 WHEEL ELECT) [illegible] | 1 | | | 2-0180 DAYS 3-0090 DAYS | 1 | .5 .5 | | | 0 | | | | |
| E135-06 | PRESS BRAKE (CHICAGO STEEL CO.) MODEL 80023 HE800[illegible] | 1 | | | 2-180 DAYS 3-090 DAYS | 1 | .5 .5 | | | 0 | | | | |
| E135-07 | POWER SQUARING MACHINE MODEL 002741 OC-2741 | 1 | | | 3-0060 DAY 3-3000 HRS 3-5000 HRS 2-180 DAYS | 1 | .3 .5 1.0 .5 | | | 0 | | | | |
| E135-08 | PRESS BRAKE MODEL 4560G 46500 HIDRATOR CO OC2740 | 1 | | | 2-1000 HRS 3-1000 HRS | 1 | .5 .5 | | | 0 | | | | |
| E135-09 | SMALL METAL SHEAR MODEL 241-C TEXTO 2/75 | 1 | | | 3-0090 DAYS | 1 | .2 | | | 0 | | | | |
| E135-10 | SMALL DRILL PRESS U1117 | 1 | | | 3-1000 HRS | 1 | .5 | | | 0 | | | | |
| E135-11 | GRINDER - 1 WHEEL (FLOOR MODEL) | NO LONGER IN SHOP | | | | | | | | | | | | |
| E135-12 | PUNCH PRESS MODEL P41P [illegible] 600354 | 1 | | | 2-1000 HRS 3-0090 DAY | 1 | .5 .2 | | | 0 | | | | |

Running Time (HR).

[illegible] 2
[illegible] 3

LSC-20094B

# EQUIPMENT PROFILE

NAME L MULLINAX ALC OC-ALC DATE 4/13 89 RCC _____ SHEET 2 OF 2

| | EQUIPMENT CODE | EQUIPMENT TYPE/DESCRIPTION | QUANTITY PER SHIFT 1st | 2nd | 3rd | DOWNTIME PREVENTIVE MAINT. FREQ. | SHIFT | DOWN TIME | UNSCHEDULED BREAKDOWN REPAIR TIME MTBF | MTTR | PERCENT USED FOR OTHER RCCs (e.g. TIME NOT AVAILABLE) | ENVELOP UNITS MIN / MAX | ALTERNATE EQUIPMENT CODE | SOURCE |
|---|---|---|---|---|---|---|---|---|---|---|---|---|---|---|
| | E135-13 | SANDER (BELT) FLOOR MOD<br>OC5799 | 1 | | | 3-180<br>2-180 | DAYS 1<br>DAYS 1 | .5<br>.5 | | | 0 | | | |
| | E135-15 | BENDING MACHINE (HAND)<br>MODEL BB-316<br>OC0190 | 1 | | | 0090 | 1 | .2 | | | 0 | | | |
| X | E135-16 | DIMPLING MACHINE<br>MODEL AT256SS<br>OC5511 | | | | 2-365<br>3-180 | DAYS<br>DAYS 1 | 1.0<br>1.0 | | | 0 | | | |
| X | E135-17 | PORTABLE ELEVATOR - BIG JOE<br>MODEL 1518-RS<br>OC6390 | | | | 3-0030<br>3-0090<br>3-0180<br>2-0090<br>2-0180 | DAYS<br>DAYS<br>"<br>"<br>" 1 | .5<br>1.0<br>.5<br>.5 | 1.5 | | 0 | | | |
| X | E135-18 | AIR HOIST<br>1 TON<br>OC9613 | | | | DAILY VISUAL | 1 | .1 | | | 0 | | | |
| X | E135-19 | AIR HOIST<br>1 TON<br>OC9614 | | | | DAILY VISUAL | 1 | .1 | | | 0 | | | |
| X | E135-20 | ELECTRONIC PROCRAMMER<br>MFR 5520<br>OC5993 | | | | 2-365 | DAYS 1 | 1.0 | | | 0 | | | |
| | | INTENTIONALLY BLANK<br>X X X | | | | | | | | | | | | |
| | E135-21 | METAL FORMER<br>735683 | | | | 3-0090 | DAYS 1 | .2 | | | | | | |
| | E135-22 | METAL SHEAR (HAND)<br>107-12-78 | | | | 3-0090 | DAYS 1 | .2 | | | | | | |
| | E135-23 | SHRINKING/STRETCHING MACHINE<br>OC3590 | | | | 3-0090 | DAYS 1 | .2 | | | | | | |
| | E135-24 | ARBOR (HAND)<br>OC0685 | 1 | | | 3-0090 | DAYS 1 | .2 | | | 0 | | | |

ELECTRICAL = 2

FIXTURE

# EQUIPMENT PROFILE

ANALYST L. MULLINAX ALC OC-ALC DATE 4/13 89 RCC [illegible] SHEET 1 OF 3

| EQUIPMENT CODE | EQUIPMENT TYPE/DESCRIPTION | QUANTITY PER SHIFT | | | DOWNTIME | | | | | PERCENT USED FOR OTHER RCCs (e.g. TIME NOT AVAILABLE) | ENVELOP UNITS | ALTERNATE EQUIPMENT CODE | SOURCE |
|---|---|---|---|---|---|---|---|---|---|---|---|---|---|
| | | | | | PREVENTIVE MAINT. | | | UNSCHEDULED BREAKDOWN REPAIR TIME | | | | | |
| | | 1st | 2nd | 3rd | FREQ. | SHIFT | DOWN TIME | MTBF | MTTR | | MIN / MAX | | |
| F335-01 | FILLET FLAP E3A/135<br>P/N 3C65-1062T1 | 1 | | | 365 | 1 | 16HR | | | 0 | | | INTERVIEW: DON COLLINS/MAINT PIT 13 APR 89 |
| F335-02 | RUDDER E3A/135<br>P/N 590CJ1130 | 1 | | | | | | | | 0 | | | |
| FE3A-01 | INBD FLAP E-3A<br>P/N SC65-1063T1 | 1 | | | | | | | | 0 | | | |
| FE3A-02 | L/H - R/H ELEVATOR E-3A<br>SCS-96190T1 | 1 | | | | | | | | 0 | | | |
| F135-01 | L/H - R/H ELEVATOR 135<br>590CJ1120 | 1 | | | | | | | | 0 | | | |
| F335-03 | INBD AILERON E3A/135<br>590CJ1010 | 3 | | | | | | | | 0 | | | |
| F335-04 | OTBD MAIN FLAP E3A/135<br>590CJ1030 | 1 | | | | | | | | 0 | | | |
| F135-02 | INBD MAIN FLAP 135<br>590CJ1020 | 1 | | | | | | | | 0 | | | |
| F335-05 | OTBD SPOILER E3A/135<br>590CJ1060 | 1 | | | | | | | | 0 | | | |
| F335-07 | OTBD AILERON E3A/135<br>590CJ1000 | 3 | | | | | | | | 0 | | | |
| F335-08 | OTBD MLG E3A/135<br>590CJ1110 | 4 | | | | | | | | 0 | | | |
| F335-09 | INBD MLG E3A/135<br>590CJ1100 | 4 | | | 365 | 1 | 16HR | | | 0 | | | |

# EQUIPMENT PROFILE

ATE L. MULLINAX ALC OC-ALC DATE 4/13 89 RCC MARTAE SHEET 2 OF 3

| EQUIPMENT CODE | EQUIPMENT TYPE/DESCRIPTION | QUANTITY PER SHIFT | | | DOWNTIME | | | | | PERCENT USED FOR OTHER RCCs (e.g. TIME NOT AVAILABLE) | ENVELOP UNITS | | ALTERNATE EQUIPMENT CODE | SOURCE |
|---|---|---|---|---|---|---|---|---|---|---|---|---|---|---|
| | | | | | PREVENTIVE MAINT. | | | UNSCHEDULED BREAKDOWN REPAIR TIME | | | | | | |
| | | 1st | 2nd | 3rd | FREQ. | SHIFT | DOWN TIME | MTBF | MTTR | | MIN | MAX | | |
| F135-03 | HOG NOSE FAIRWG 135<br>65-10607-46 | 1 | | | 365 | 1 | 16HRS | | | 0 | | | | |
| F135-04 | OTBD ENG STRUT 135<br>S90CJ1150 | 1 | | | | | | | | 0 | | | | |
| F135-05 | INBD ENG STRUT 135<br>S90CJ1150 | 1 | | | | | | | | 0 | | | | |
| F135-06 | BOTTOM PANEL 135<br>FAJ64-6327-621 | 1 | | | | | | | | 0 | | | | |
| F135-07 | TAIL CONE 135<br>7627259 | 1 | | | | | | | | 0 | | | | |
| F135-08 | KNEE CAP FAIRING 135<br>TJS-85654 | 1 | | | | | | | | 0 | | | | |
| F135-09 | BOOM POD FAIRING 135 | 1 | | | | | | | | 0 | | | | |
| F135-10 | NOSE WHEEL FAIRING 135<br>2FAJS-73139-1 | 1 | | | | | | | | 0 | | | | |
| F135-11 | NOSE WHEEL FAIRING 135<br>FRJS-73139-1 | 1 | | | | | | | | 0 | | | | |
| F135 | NOSE WHEEL FAIRING 135<br>FAJS-73139-1 | 1 | | | | | | | | 0 | | | | |
| F135-18 | BOOM TAIL CONE 135<br>600CJ809 | 3 | | | | | | | | 0 | | | | |
| FE3A-03 | RH SIDE COWL E3A<br>SC65-2549T | 1 | | | 365 | 1 | 16HRS | | | 0 | | | | |

A 4/11

# EQUIPMEN. .ROFILE

NAME L. MULLINAX ALC OC-ALC DATE 4/13 81 RCC MALPAC SHEET 2 OF 2

| EQUIPMENT CODE | EQUIPMENT TYPE/DESCRIPTION | QUANTITY PER SHIFT | | | DOWNTIME | | | | | PERCENT USED FOR OTHER RCCs (e.g. TIME NOT AVAILABLE) | ENVELOP UNITS | | ALTERNATE EQUIPMENT CODE | SOURCE |
|---|---|---|---|---|---|---|---|---|---|---|---|---|---|---|
| | | | | | PREVENTIVE MAINT. | | | UNSCHEDULED BREAKDOWN REPAIR TIME | | | MIN | MAX | | |
| | | 1st | 2nd | 3rd | FREQ. | SHIFT | DOWN TIME | MTBF | MTTR | | | | | |
| FE3A-04 | LH SIDE COWL E3A<br>SC 65-2549T1 | 1 | | | 365 | 1 | 16 HRS | | | 0 | | | | |
| F135-13 | RH SIDE COWL (J-57) 135<br>3AJS-85638 | 2 | | | 365 | 1 | 24 HRS | | | 0 | | | | |
| F135-14 | LH SIDE COWL (J-57) 135 | 2 | | | 365 | 1 | 24 HRS | | | 0 | | | | |
| F135-15 | R. SIDE COWL (TF33PS) 135<br>OC 75-64-8327-488 | 1 | | | 365 | 1 | 16 HRS | | | 0 | | | | |
| F135-16 | LH SIDE COWL (TF33PS) 135<br>OC 75-64-8327-487 | 1 | | | | | | | | 0 | | | | |
| FE3A-05 | NOSE COWL E3A<br>204-70099-3ASMJ | 1 | | | | | | | | 0 | | | | |
| FE3A-06 | NOSE COWL E3A<br>204-70099-TRMJ | 1 | | | | | | | | 0 | | | | |
| F135-17 | NOSE COWL J57 135<br>AJS-85655 | 1 | | | 365 | 1 | 16 HRS | | | 0 | | | | |
| | | | | | | | | | | | | | | |
| | | | | | | | | | | | | | | |
| | | | | | | | | | | | | | | |
| | | | | | | | | | | | | | | |

WORK ATIONS

# EQUIPME. PROFILE

NAME R. BOLANOS ALC OC DATE 4/20/89 RCC MABPAB SHEET 1 OF 2

| EQUIPMENT CODE | EQUIPMENT TYPE/DESCRIPTION | QUANTITY PER SHIFT | | | DOWNTIME | | | | | PERCENT USED FOR OTHER RCCs (e.g. TIME NOT AVAILABLE) | ENVELOP UNITS | ALTERNATE EQUIPMENT CODE | SOURCE |
|---|---|---|---|---|---|---|---|---|---|---|---|---|---|
| | | | | | PREVENTIVE MAINT. | | | UNSCHEDULED BREAKDOWN REPAIR TIME | | | | | |
| | | 1st | 2nd | 3rd | FREQ. | SHIFT | DOWN TIME | MTBF | MTTR | | MIN / MAX | | |
| 25 | BENCH (WORK STA) | 10 | | | | | | | | | | | T. Hall 15025A. |
| 113 | " | 16 | | | | | | | | | | | 15113A |
| 119 | " | 4 | | | | | | | | | | | 15119A & 15321A |
| 126 | " | 4 | | | | | | | | | | | 15126A & 15300A |
| 136 | " | 4 | | | | | | | | | | | 15136A & 15137A |
| 140 | " | 5 | | | | | | | | | | | 15140A |
| 150 | " | 16 | | | | | | | | | | | 15150A |
| 175 | " | 3 | | | | | | | | | | | 15175A |
| 178 | " | 5 | | | | | | | | | | | 15178A |
| 188153 | " | 12 | | | | | | | | | | | 15153A & 15151A |
| 188154 | " | 6 | | | | | | | | | | | 15154A & 15152A |
| 236 | " | 4 | | | | | | | | | | | 15236A |

WORK - TION.

# EQUIPME..T PROFILE

NAME R. BOLANOS ALC OC DATE 4/20/ RCC MABPAB SHEET 2 OF 2

| EQUIPMENT CODE | EQUIPMENT TYPE/DESCRIPTION | QUANTITY PER SHIFT | | | DOWNTIME | | | | | PERCENT USED FOR OTHER RCCs (e.g. TIME NOT AVAILABLE) | ENVELOP UNITS | ALTERNATE EQUIPMENT CODE | SOURCE |
|---|---|---|---|---|---|---|---|---|---|---|---|---|---|
| | | | | | PREVENTIVE MAINT. | | | UNSCHEDULED BREAKDOWN REPAIR TIME | | | | | |
| | | 1st | 2nd | 3rd | FREQ. | SHIFT | DOWN TIME | MTBF | MTTR | | MIN / MAX | | |
| 237 | BENCH (Work Sta) | 1 | | | | | | | | | 1 / 1 | | 15237A |
| 249 | " | 5 | | | | | | | | | | | 15249A |
| | " | - | | | | | | | | | | | 15250A |
| | | | | | | | | | | | | | |
| | | | | | | | | | | | | | |
| | | | | | | | | | | | | | |
| | | | | | | | | | | | | | |
| | | | | | | | | | | | | | |
| | | | | | | | | | | | | | |
| | | | | | | | | | | | | | |
| | | | | | | | | | | | | | |
| | | | | | | | | | | | | | |

ESC-20094B

MASPAB EQUIPMENT

| EQUIP. CODE NO. | NAME | MODEL | QUANTITY |
|---|---|---|---|
| [illegible]-01 | Bending MACHINE ([illegible]) | 16 | 1 |
| " 02 | [illegible] | | 2 |
| " 03 | [illegible] | | 1 |
| " 04 | [illegible] (FLOOR [illegible]) | [illegible] | 1 |
| " 05 | [illegible] | | 1 |
| " | ([illegible] ELECT) | | |
| " [illegible] | [illegible] (CHICAGO [illegible] CO.) | [illegible]3 | 1 |
| " [illegible]7 | [illegible] | [illegible] | 1 |
| " [illegible] | [illegible] | [illegible] | 1 |
| " 09 | [illegible] METAL SHEAR | [illegible] | 1 |
| " 10 | [illegible] DRILL PRESS | | 1 |
| " 11 | [illegible] WHEEL, (FLOOR [illegible]) | [illegible] | 1 |
| ab 14 | [illegible] | [illegible] | 1 |
| " | [illegible] | [illegible] | 1 |
| | [illegible] | [illegible] | 1 |
| 16 | DIMPLING MACHINE | AT256SS | 1 |
| 17 | PORTABLE ELEVATOR | 1518-R5 | 1 |
| 18 | AIR HOIST 1 TON | S2T18-20S | 1 |
| 19 | AIR HOIST 1 TON | S2T18-20S | 1 |
| 20 | ELECTRONIC PROG | SQ200 | 1 |
| 21 | METAL FORMER | 381D | 1 |
| 22 | METAL SHEAR (HAND) | 107-12-78 | 1 |
| 23 | SHRINKING/STRETCHING MACHINE | 8028 | 1 |
| 24 | ARBOR (HAND) | 0685 | 1 |

# DISASSEMBLY/ASSEMBLY . ROFILE

NAME R BOLANOS ALC OC DATE 4/5/89 RCC MABPAB SHEET 1 OF 2

| TOP ASSEMBLY | | | REMOVAL OPERATION NUMBER | INSTALLATION OPERATION NUMBER | SUBASSEMBLY | | | SAME REMOVED ITEM INSTALLED INTO ASSY. Y/N |
|---|---|---|---|---|---|---|---|---|
| ITEM NUMBER | WCD | WCD DATE | | | ITEM NUMBER | CHILD WCD | CHILD WCD DATE | |
| PCN NSN P/N 15188A | 15153A | 88055 | 20 | 310 | PCN NSN P/N 15188A | 15154A | 88055 | N |
| PCN NSN P/N 15189A | 15153A | 88055 | 20 | 310 | PCN NSN P/N 15189A | 15154A | 88055 | N |
| PCN NSN P/N 15191A | 15151A | 88055 | 20 | 310 | PCN NSN P/N 15191A | 15152A | 88055 | N |
| PCN NSN P/N 15192A | 15151A | 88055 | 20 | 310 | PCN NSN P/N 15192A | 15152A | 88055 | N |
| PCN NSN P/N | | | | | PCN NSN P/N | | | |

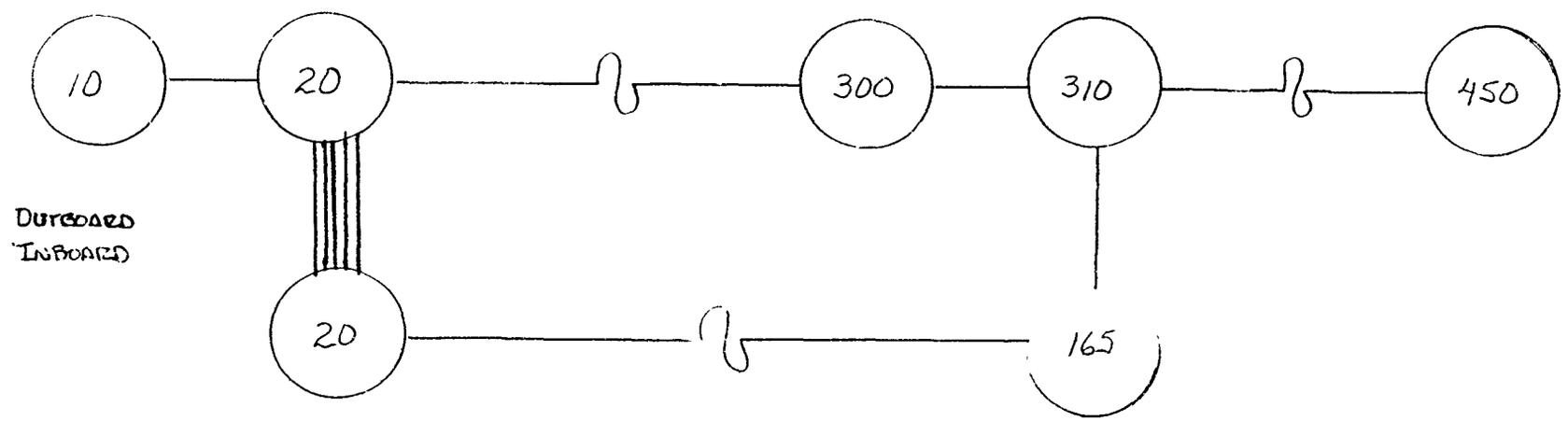


PCN NSN P/N | NSN P/N

| | FLAPS | FORE-FLAPS | RIGHT | LEFT |
|---|---|---|---|---|
| INBOARD | 15151A | 15152A | 15192A | 15191A |
| OUTBOARD | 15153A | 15154A | 15189A | 15188A |

LSC-20005A

# DISASSEMBLY/ASSEMBLY PROFILE

NAME R. BOLANOS ALC OC DATE 4/10/89 RCC MABPAB SHEET 2 OF 2

| TOP ASSEMBLY | | | REMOVAL OPERATION NUMBER | INSTALLATION OPERATION NUMBER | SUBASSEMBLY | | | SAME REMOVED ITEM INSTALLED INTO ASSY. Y/N |
|---|---|---|---|---|---|---|---|---|
| ITEM NUMBER | WCD | WCD DATE | | | ITEM NUMBER | CHILD WCD | CHILD WCD DATE | |
| PCN NSN P/N 15236A | 15236A | 88054 | 50 | 290 | PCN NSN P/N 15237A | 15236B | 88069 | N |
| PCN NSN P/N | | | | | PCN NSN P/N | | | |
| PCN NSN P/N | | | | | PCN NSN P/N | | | |
| PCN NSN P/N | | | | | PCN NSN P/N | | | |
| PCN NSN P/N | | | | | | | | |
| PCN NSN P/N | | | | | | | | |
| PCN NSN P/N | | | | | | | | |
| PCN NSN P/N | | | | | | | | |
| PCN NSN P/N | | | | | | | | |
| PCN NSN P/N | | | | | | | | |
| PCN NSN P/N | | | | | | | | |
| PCN NSN P/N | | | | | P/N | | | |
| PCN NSN P/N | | | | | PCN NSN P/N | | | |
| PCN NSN P/N | | | | | PCN NSN P/N | | | |
| PCN NSN P/N | | | | | PCN NSN P/N | | | |

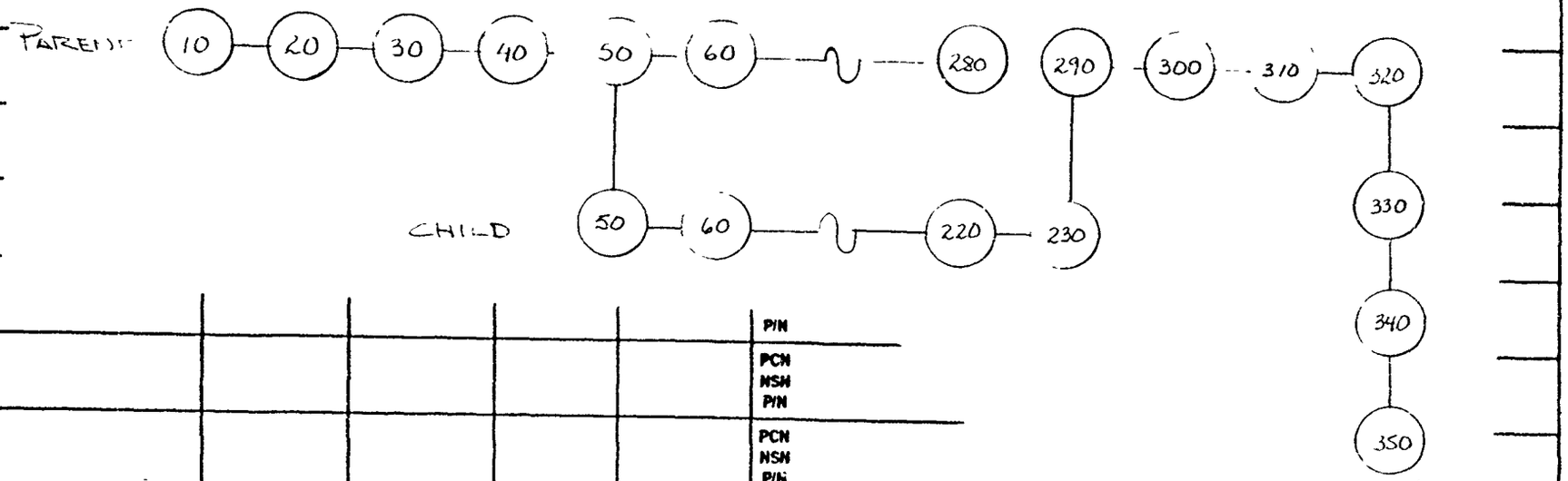


LSC 2000SA

* IF TOP ASSY (SLEEVE ASSY) IS INDUCTED AS 15236A, A SUB-ASSY (FAIRING AFT) IS A 5236B HOWEVER A (FAIRING AFT) can be inducted AS 15237A alone. IT CAN NOT GO INTO A 15236A)

MABPABPF.PF PARALLEL PROCESS PROFILE 4/28/1988
REQ. MLW OC TURNER, AFB OKLAHOMA CITY, OK. RCC = MABPABP

| * * * PARENT PART * | | * * * BEG | END | * CHILD PROCESS INFORMATION * | | |
|---|---|---|---|---|---|---|
| ITEM NUMBER | WCD | WDATE OPN | OPN | ITEM NUMBER | WCD | WDATE |
| 15025A | 15025A | 88054 65 | 370 | MISC25 | 15025B | 88054 |
| 15113A | 15113A | 88054 65 | 370 | MISC13 | 15113B | 88054 |
| 15136A | 15136A | 88205 40 | 160 | MISC36 | 15136B | 88205 |
| 15137A | 15136AA | 88205 40 | 160 | MISC37 | 15136BA | 88205 |
| 15150A | 15150A | 88054 30 | 130 | MISC50 | 15150B | 88054 |
| 15140A | 15140A | 89073 30 | 130 | MISC40 | 15140B | 89073 |
| 15175A | 15175A | 89073 60 | 180 | MISC75 | 15175B | 89073 |
| 15178A | 15178A | 88054 22 | 90 | MISC78 | 15178B | 88054 |
| 15188A | 15153A | 88055 60 | 170 | MISC88 | 15153B | 88055 |
| 15189A | 15153AA | 88055 60 | 170 | MISC89 | 15153BA | 88055 |
| 15191A | 15151A | 88055 60 | 170 | MISC91 | 15151B | 88055 |
| 15192A | 15151AA | 88055 60 | 170 | MISC92 | 15151BA | 88055 |
| 15236A | 15236A | 88054 80 | 150 | MISC236 | 15236BA | 88054 |
| 15237A | 15237A | 88054 60 | 150 | MISC237 | 15237B | 88054 |
| 15249A | 15249A | 88055 55 | 70 | MISC249 | 15249B | 88055 |
| 15250A | 15250A | 88055 55 | 70 | MISC250 | 15250B | 88055 |
| 15126A | 15126A | 89073 30 | 120 | MISC26 | 15126B | 89073 |
| 15300A | 15126AA | 89073 30 | 120 | MISC300 | 15126BA | 89073 |

# PARALLEL PROCESS PROFILE

NAME Bolanos ALC OC DATE 4/24/84 RCC MABPAB SHEET 1 OF 2

| ITEM NUMBER | PARENT WCD | PARENT WCD DATE | BEGINNING OPERATION NUMBER | ENDING OPERATION NUMBER | CHILD PROCESS INFORMATION | | |
|---|---|---|---|---|---|---|---|
| | | | | | ITEM NUMBER | CHILD WCD | CHILD WCD DATE |
| PCN 15025A | 15025A | 88054 | 65 | 370 | PCN Misc | 15025A | 88054 |
| PCN 15113A | 15113A | 88054 | 65 | 370 | PCN Misc | 15113A | 88054 |
| PCN 15136A | 15136A | 88205 | 40 | 160 | PCN Misc | 15136A | 88205 |
| PCN 15137A | 15136A | 88205 | 40 | 160 | PCN Misc | 15136A | 88205 |
| PCN 15150A | 15150A | 88054 | 30 | 130 | PCN Misc | 15150A | 88054 |
| PCN 15140A | 15140A | 89073 | 30 | 130 | PCN Misc | 15140A | 89073 |
| PCN 15175A | 15175A | 89073 | 60 | 180 | PCN Misc | 15175A | 89073 |
| PCN 15178A | 15178A | 88054 | 22 | 90 | PCN Misc | 15178A | 88054 |
| PCN 15183A | 15153A | 88055 | 60 | 170 | PCN Misc 88 | 15153A | 88055 |
| PCN 15189A | 15153A | 88055 | 60 | 170 | PCN Misc 89 | 15153A | 88055 |
| PCN 15191A | 15151A | 88055 | 60 | 170 | PCN Misc 91 | 15151A | 88055 |
| PCN 15172A | 15151A | 88055 | 60 | 170 | PCN Misc 92 | 15151A | 88055 |

LSC-20103A

# PARALLEL PROCESS PROFILE

NAME Bofaro ALC OC DATE 4/24/89 RCC _____ SHEET 2 OF 2

| ITEM NUMBER | PARENT WCD | PARENT WCD DATE | BEGINNING OPERATION NUMBER | ENDING OPERATION NUMBER | CHILD PROCESS INFORMATION | | |
|---|---|---|---|---|---|---|---|
| | | | | | ITEM NUMBER | CHILD WCD | CHILD WCD DATE |
| PCN NSN P/N 15236A | 15236A | 88054 | 80 | 150 | PCN NSN P/N Misc | 15236A | 88054 |
| PCN NSN P/N 15237A | 15237A | 88054 | 60 | 150 | PCN NSN P/N Misc | 15237A | 88054 |
| PCN NSN P/N 15249A | 15249A | 88055 | 55 | 70 | PCN NSN P/N Misc | 15249A | 88055 |
| PCN NSN P/N 15250A | 15250A | 88055 | 55 | 70. | PCN NSN P/N Misc | 15250A | 88055 |
| PCN NSN P/N 15136A | 15136A | 89073 | 30 | 120 | PCN NSN P/N Misc 26 | 15136A | 89073 |
| PCN NSN P/N 15300A | 15136A | 89073 | 30 | 120 | PCN NSN P/N Misc. 300 | 15136A | 89073 |
| PCN NSN P/N | | | | | PCN NSN P/N | | |
| PCN NSN P/N | | | | | PCN NSN P/N | | |
| PCN NSN P/N | | | | | PCN NSN P/N | | |
| PCN NSN P/N | | | | | PCN NSN P/N | | |
| PCN NSN P/N | | | | | PCN NSN P/N | | |
| PCN NSN P/N | | | | | PCN NSN P/N | | |

LSC-20103A

513 257 7114

5/23

19.5%

1.0837

# MANPOWER PROFILE

ALC _____ DATE _____ RCC _____ SHEET ___ OF ___

| JOB CODE/LEVEL | JOB DESCRIPTION | QUARTER | QUANTITY AVAILABLE: WORK WEEK 1 | 2 | 3 | WEEKEND 1 | 2 | 3 | HOLIDAYS 1 | 2 | 3 | MANPOWER AVAILABLE (HOURS): WORK WEEK 1 | 2 | 3 | WEEKEND 1 | 2 | 3 | HOLIDAYS 1 | 2 | 3 | ALTERNATE JOB CODE/LEVEL |
|---|---|---|---|---|---|---|---|---|---|---|---|---|---|---|---|---|---|---|---|---|---|
| | | 1 | 24 | | | 5 | | | | | | 5.6 | 4.50 | | 7.24 | 5.8 | | | | | |
| HS | LEFT HAND SIDE COWL | 2 | 24 | | | 3 | | | | | | 5.7 | 4.60 | | 7.24 | | | | | | |
| | | 3 | 21 | | | 6 | | | | | | 5.9 | 4.80 | | 7.24 | | | | | | |
| | | 4 | 24 | | | 6 | | | | | | 5.8 | 4.70 | | 7.24 | | | | | | |
| | | 1 | 24 | | | 5 | | | | | | 5.6 | | | 7.24 | | | | | | |
| CS | RIGHT HAND SIDE COWL | 2 | 26 | | | 4 | | | | | | 5.7 | | | 7.24 | | | | | | |
| | | 3 | 20 | | | 6 | | | | | | 5.9 | | | 7.24 | | | | | | |
| | | 4 | 26 | | | 5 | | | | | | 5.8 | | | 7.24 | | | | | | |
| | | 1 | 10 | | | 2 | | | | | | 5.6 | | | 7.24 | | | | | | |
| CS | NOSE COWL | 2 | 11 | | | 2 | | | | | | 5.7 | | | 7.24 | | | | | | |
| | | 3 | 12 | | | 4 | | | | | | 5.9 | | | 7.24 | | | | | | |
| | | 4 | 18 | | | 4 | | | | | | 5.8 | | | 7.24 | | | | | | |
| | | 1 | 38 | | | 8 | | | | | | 5.6 | | | 7.24 | | | | | | |
| DS | FLAPS | 2 | 24 | | | 3 | | | | | | 5.7 | | | 7.24 | | | | | | |
| | | 3 | 12 | | | 4 | | | | | | 5.9 | | | 7.24 | | | | | | |
| | | 4 | 5 | | | 1 | | | | | | 5.8 | | | 7.24 | | | | | | |
| | | 1 | 41 | | | 9 | | | | | | 5.6 | | | 7.24 | | | | | | |
| S | [illegible] COWL | 2 | 47 | | | 7 | | | | | | 5.7 | | | 7.24 | | | | | | |
| | | 3 | 55 | | | 17 | | | | | | 5.9 | | | 7.24 | | | | | | |
| | | 4 | 45 | | | 9 | | | | | | 5.8 | | | 7.24 | | | | | | |

1) 1st 180 days
15 swings

2) 2nd 180
14

# MANPOWER PROFILE

RCC _____ DATE _____ RCC _____ SHEET ___ OF ___

| CODE/LEVEL | JOB DESCRIPTION | QUARTER | QUANTITY AVAILABLE | | | | | | | | | MANPOWER AVAILABLE (HOURS) | | | | | | | | | ALTERNATE SKILL CODE/LEVEL |
|---|---|---|---|---|---|---|---|---|---|---|---|---|---|---|---|---|---|---|---|---|---|
| | | | WORK WEEK | | | WEEKEND | | | HOLIDAYS | | | WORK WEEK | | | WEEKEND | | | HOLIDAYS | | | |
| | | | 1 | 2 | 3 | 1 | 2 | 3 | 1 | 2 | 3 | 1 | 2 | 3 | 1 | 2 | 3 | 1 | 2 | 3 | |
| FS | Misc | 1 | 48 | | | 10 | | | | | | 5.6 | | | 7.24 | | | | | | |
| | | 2 | 48 | | | 7 | | | | | | 5.7 | | | 7.24 | | | | | | |
| | | 3 | 50 | | | 15 | | | | | | 5.9 | | | 7.24 | | | | | | |
| | | 4 | 57 | | | 11 | | | | | | 5.8 | | | 7.24 | | | | | | |
| | | 1 | | 15 | | | | | | | | | 5.6 | | | | | | | | |
| FS | Swing | 2 | | 14 | | | | | | | | | 5.7 | | | | | | | | |
| | | 3 | | 16 | | | | | | | | | 5.9 | | | | | | | | |
| | | 4 | | 14 | | | | | | | | | 5.8 | | | | | | | | |
| | | 1 | | | | | | | | | | | | | | | | | | | |
| | | 2 | | | | | | | | | | | | | | | | | | | |
| | | 3 | | | | | | | | | | | | | | | | | | | |
| | | 4 | | | | | | | | | | | | | | | | | | | |
| | | 1 | | | | | | | | | | | | | | | | | | | |
| | | 2 | | | | | | | | | | | | | | | | | | | |
| | | 3 | | | | | | | | | | | | | | | | | | | |
| | | 4 | | | | | | | | | | | | | | | | | | | |
| | | 1 | | | | | | | | | | | | | | | | | | | |
| | | 2 | | | | | | | | | | | | | | | | | | | |
| | | 3 | | | | | | | | | | | | | | | | | | | |
| | | 4 | | | | | | | | | | | | | | | | | | | |

## 5.1 PROFILE DATA FILES

The profile data files for RCC MABPAB were previously submitted under memo number NKE-E016-6955, dated June 5, 1989.

## 5.2 MODEL INPUT FILES

The model input files for RCC MABPAB were previously submitted under memo number NKE-E016-6955, dated June 5, 1989.

## 6.0 VALIDATION OF INPUT DATA

All profile data was validated in accordance with paragraph 7.2 and 7.3 of the Simulation Model Definition Document (SMDD). The profile data as included in this document were validated and accurately represent this RCC.

# TI VALIDATION FORM

| RCC | ALC |
|---|---|
| MABPAB | OC-ALC |

TITLE SHEET METAL SHOP

REMARKS THE SIMULATION MODEL FOR OC-ALC MABPAB, SHEET METAL SHOP, IS AN APROXIMATION OF THE MABPAB "AS IS" CONDITION AND ESTABLISHES A BASELINE RECOMMENDED TO BE ACCEPTED AND USED FOR EXPERMENTATION AND RELEASE. THE FOLLOWING CONTINGENCY APPLY FOR FINAL ACCEPTANCE:

1. VERIFY THAT THE MODEL WILL LOAD AND RUN ON THE OC-ALC VAX SYSTEM.
   MDMSC WILL BRING THE MODEL TO OC-ALC, LOAD AND RUN THE MODEL TO ASSURE COMPATABILITY WITH THE OC-ALC VAX SYSTEM AS A CONDITION FOR FINAL ACCEPTANCE OF THE MODEL AND THE DATA FROM BOTH THE OC-ALC & MDMSC VAX SYSTEMS ARE COMPARABLE
2. PROVIDE TO OC-ALC AND HQ AFLC A COPY OF THE UPDATED MODEL FLAT FILES TO VERIFY THAT INPUTS MADE TO THE MANPOWER AND OPERATIONS PROFILES CHANGED THE OUTPUTS AS PREDICTED PROVIDING AN ACCEPTED BASELINE.
   CHANGES
   (a) REDUCTION OF 10.87% BY EACH OPERATIONS
   (b) UPGRADE MANPOWER FACTOR BY 11.2%
   (c) REDUCTION OF 19.5% OF MANPOWER

APPROVAL RECOMMENDED

| ALC | AFLC REP. | MDMSC |
|---|---|---|
| Earl E. Stamps 5-24-89 | Truie R Brown 5/24/89 | R Bolaum 5/24/89. |

AFLC HQ..

D. Cripe

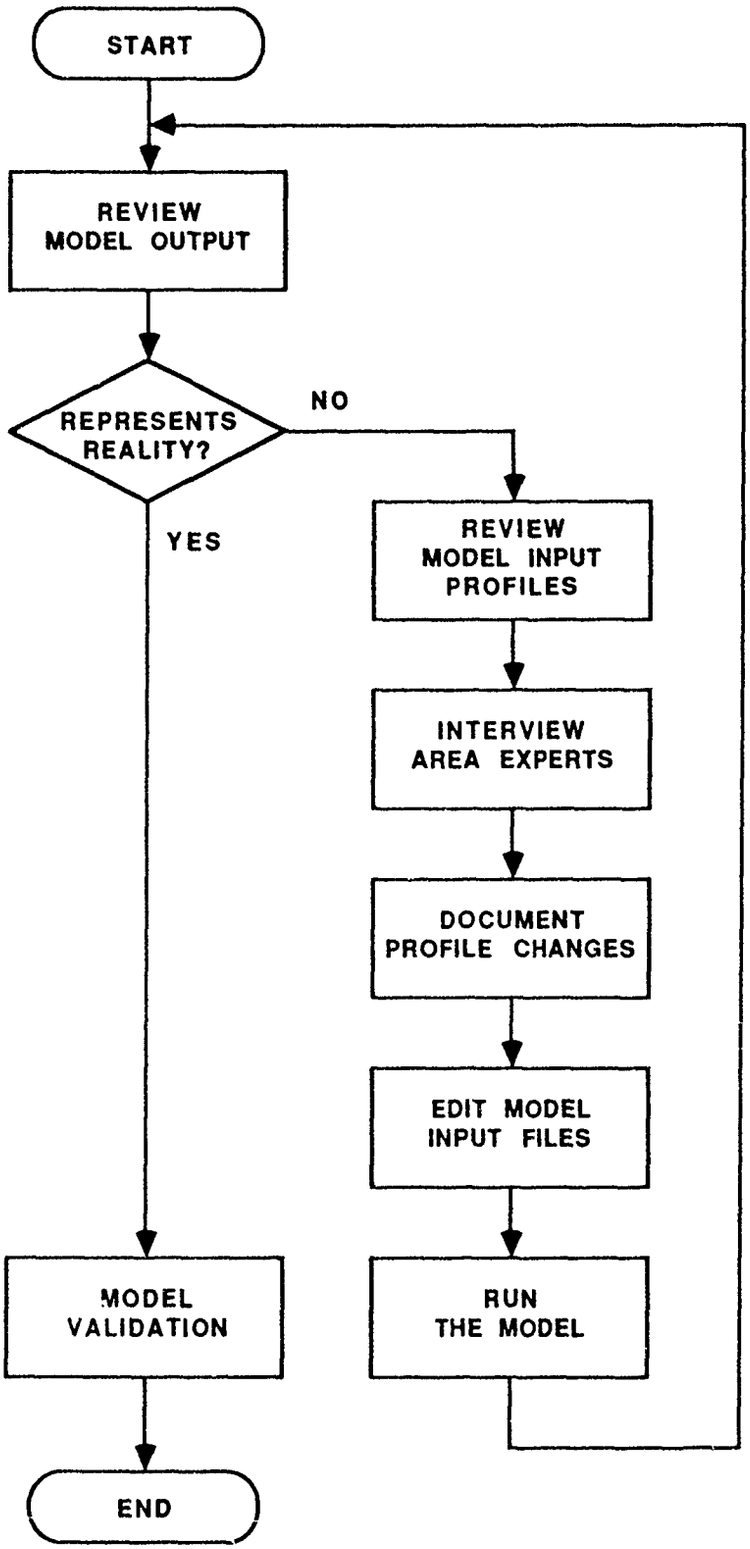


LSC-20456

**MABPAB MODEL VALIDATION PROCESS**

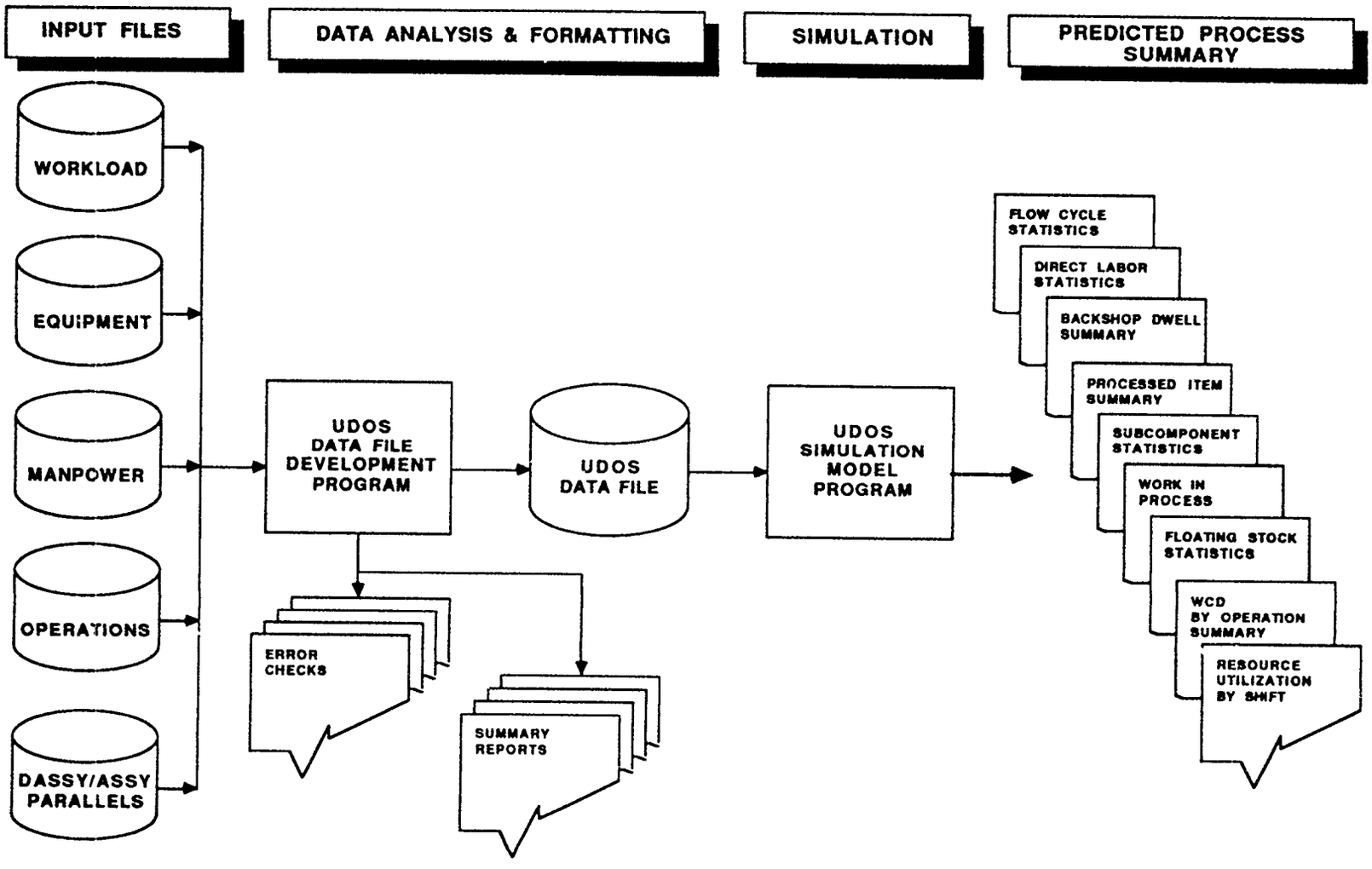


LSC-20462

**UNIVERSAL DEPOT OVERHAUL SIMULATOR (UDOS 2.0) FUNCTIONAL FLOW DIAGRAM**

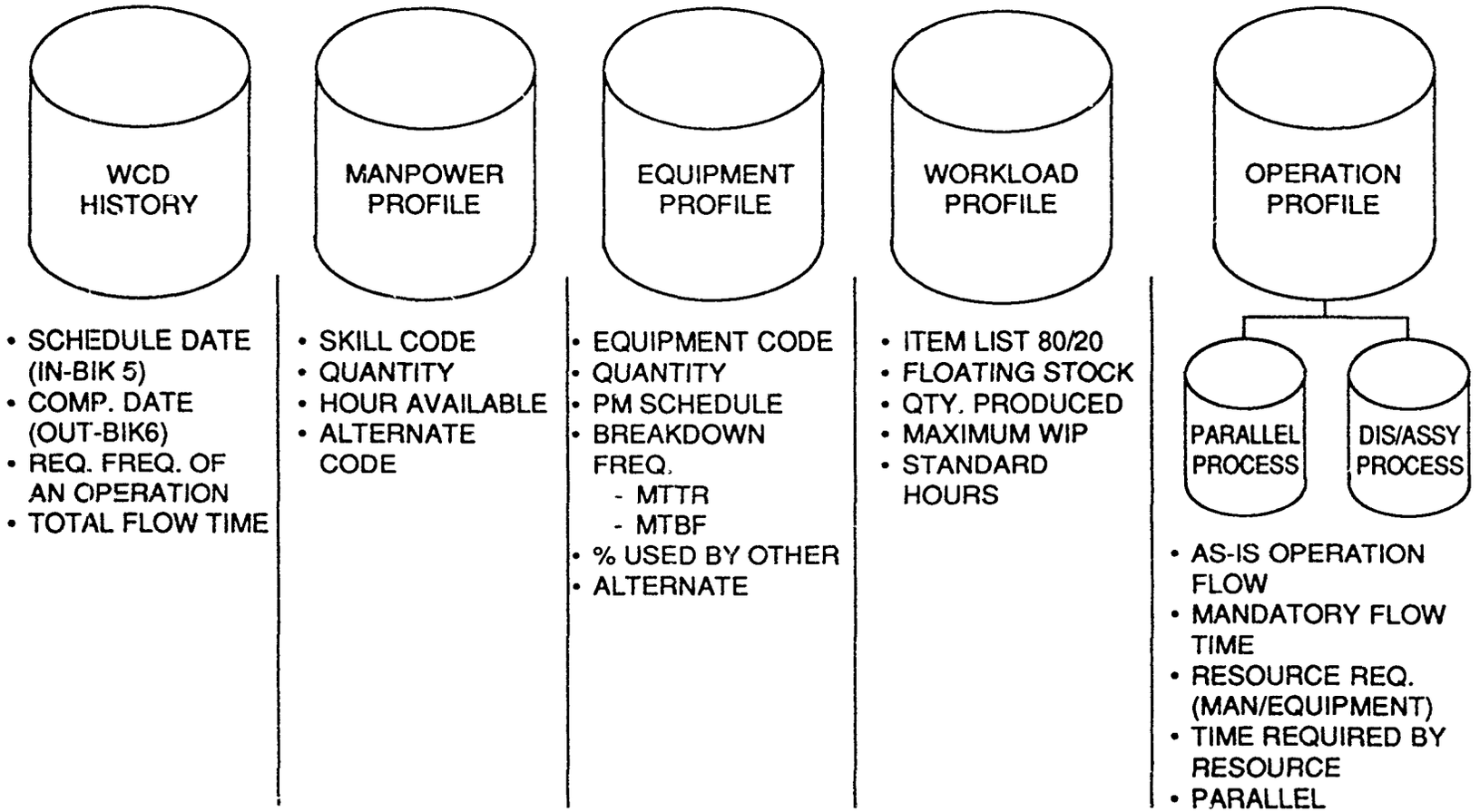


**TI DATA BANK/SIMULATION MODEL**

LSC-20198A

# VALIDATION PROCEDURE FOR OC-ALC

DRAFT

1. List all assumptions used during data collection

2. Determine criterion the model output must meet to be considered valid (i.e. 80% confidence level)

3. Compare historical flow time to simulated flow time and number of samples to FY88 output. Compare the two areas by calculating the variance and percent variance between the two (Atch 1). (For flow time comparison can use the statistical validation can be used if available)

4. Any comparisons not within the confidence level must be investigated further to determine reasons for not meeting this criterion (Atch 2).

- Check inductions (are they constant or sparatic)

- Check percent variance between merchanics estimate, standard and history for labor hours. If large discrepancy, may need to investigate each source once again)

- Check equipment utilization and verify with shop floor

- Check personnel utilization and verify with shop floor

- Check queuing on there resources and verify with shop floor

5. Once these areas have all been evaluated, does everyone feel they understand why the discrepancy is there or can it be adjusted using information obtained through the evaluation. If everyone is comfortable with the model output then we can conclude the model is valid. If there are several items that can not be explained then the model is not valid.

ALC: OC RCC: MABPAB QUARTER: 4 DATE: --MAY-89 TIME: 11:44:27 REPT.ID: VALIT I PAGE:

## FLOW CYCLE TIME STATISTICS

| SIMPLE | ITEM | HISTORY | HISTORICAL FLOWTIME HOURS | AVERAGE SIMULATED FLOW TIME HOURS | VAR | STANDARD DEVIATION | % VAR | SIMULATED MINIMUM FLOW TIME HOURS | SIMULATED MAXIMUM FLOW TIME HOURS | NUMBER OF SAMPLES | | VAR | % V |
|---|---|---|---|---|---|---|---|---|---|---|---|---|---|
| 54 | 15113A | 1,276 | 864.00 | 809.79 | 54.21 | 104.56 | 6.7 | 566.16 | 1107.36 | 243 | 233 | 10 | 4. |
| 28 | 15025A | 1,628.4 | 864.00 | 847.91 | 16.09 | 204.00 | 1.9 | 443.19 | 1248.91 | 240 | 214 | 26 | 10 |
| 44 | 15119A | 1,177.7 | 432.00 | 571.08 | 139.08 | 82.88 | 25.7 | 459.98 | 820.13 | 69 | 65 | 4 | 6. |
| 30 | 15321A | 1,015.2 | 456.00 | 561.96 | 105.96 | 97.06 | 23.2 | 435.98 | 820.13 | 69 | 65 | 4 | 6. |
| 36 | 15126A | 892.7 | 432.00 | 348.54 | 83.46 | 38.93 | 23.9 | 270.94 | 509.91 | 69 | 68 | 1 | 1. |
| 3 | 15300A | 374.00 | 456.00 | 363.39 | 92.61 | 33.55 | 25.3 | 271.45 | 438.22 | 69 | 67 | 2 | 3 |
| 18 | 15136A | 766.7 | 504.00 | 481.41 | 22.59 | 64.56 | 4.7 | 388.41 | 654.70 | 76 | 73 | 3 | 4. |
| 11 | 15137A | 440.8 | 504.00 | 451.51 | 52.49 | 57.08 | 11.6 | 363.85 | 602.02 | 73 | 69 | 4 | 5. |
| 19 | 15140A | 1235.4 | 504.00 | 687.56 | 138.56 | 222.70 | 36.7 | 436.91 | 1228.77 | 45 | 17 | 28 | 164 |
| 36 | 15150A | 1455.4 | 744.00 | 820.44 | 76.44 | 158.54 | 10.3 | 487.49 | 1230.75 | 154 | 122 | 32 | 26 |
| 32 | 15175A | 4182.9 | 528.00 | 716.82 | 188.82 | 150.74 | 35.8 | 461.70 | 1004.88 | 71 | 69 | 3 | 2. |
| 2 | 15178A | 360 | 456.00 | 410.54 | 45.46 | 43.75 | 11.1 | 343.85 | 550.05 | 220 | 202 | 18 | 8 |
| 10 | 15188A | 1,011 | 840.00 | 1058.64 | 218.64 | 119.61 | 20.+ | 820.28 | 1276.50 | 58 | 56 | 2 | 3 |
| 44 | 15189A | 873.3 | 840.00 | 1126.18 | 286.18 | 163.46 | 34.1+ | 796.14 | 1471.38 | 60 | 54 | 6 | 1 |
| 5 | 15188ASUB1 | 715.2 | 0.00 | 253.85 | | 51.68 | | 173.66 | 364.26 | 15 | 56 | | |
| 10 | 15189ASUB1 | 813.6 | 0.00 | 260.92 | | 42.78 | | 175.62 | 365.11 | 15 | 60 | | |
| 41 | 15191A | 1027.9 | 864.00 | 1050.03 | 186 | 119.25 | 21.5+ | 795.53 | 1297.86 | 55 | 47 | 8 | 1 |
| 9 | 15192A | 730.7 | 892.00 | 1155.16 | 263 | 157.87 | 29.3+ | 869.40 | 1517.41 | 39 | 33 | 6 | 1 |
| 1 | 15191ASUB1 | 3234.7 | 0.00 | 254.69 | | 50.61 | | 175.50 | 388.24 | 15 | 52 | | |
| 10 | 15192ASUB1 | 1728 | 0.00 | 284.04 | | 48.15 | | 174.39 | 363.79 | 15 | 38 | | |
| 13 | 15236A | 1639.4 | 840.00 | 776.89 | 63.1 | 60.32 | 8.1 | 652.80 | 715.00 | 34 | 34 | 0 | |
| | 15237A | | 384.00 | | | ** NO VALUES RECORDED ** | | | | | | | |
| 4 | 15249A | 156 | 984.00 | 962.55 | 21.45 | 120.01 | 2.2 | 699.43 | 1249.39 | 74 | 67 | 7 | |
| 1 | 15250A | 833.2 | 984.00 | 953.13 | 30.87 | 117.22 | 3.2 | 700.73 | 1249.09 | 74 | 65 | 9 | |
| 1 | 15237ASUB1 | 1731 | 0.00 | 243.60 | | 47.27 | | 122.80 | 337.30 | 25 | 34 | | |
| | | | 12,588 | 1,165.51 | 14,153.52 | 9.0% | | | | 1824 | 1620 | 204 | |

### HISTORY

| PCN | VAR | % VAR |
|---|---|---|
| 15113A | 466.51 | 57.6 |
| 15025A | 750.49 | 92 |
| 15119A | 606.62 | 106.2 |
| 15321A | 453.24 | 80.7 |
| 15126A | 544.16 | 156.1 |
| 15300A | 12.61 | 3.5 |
| 15136A | 285.27 | 59.3 |
| 15137A | 10.71 | 2.4 |
| 15140A | 547.84 | 79.7 |
| 15150A | 630.96 | 77.1 |
| 15175A | 3466.08 | 483.5 |
| 15178A | 50.54 | 14 |
| 15188A | 47.66 | 4.7 |
| 15189A | 252.88 | 29 |
| 88Sub | Sub | |
| 89Sub | Sub | |
| 15191A | 22.40 | 2.2 |
| 15192A | 424.46 | 58.1 |
| 191Sub | Sub | |
| 192Sub | Sub | |
| 15236A | 862.5 | 111 |

| PCN | VAR (CONT) | % VAR (CONT) |
|---|---|---|
| 15249A | 806.56 | 517 |
| 15250A | 119.93 | 14.4 |
| 237Sub | Sub | |

- 1st Time need finish - [illegible]

AS RATIO OF History AND Simulation
[illegible] 1. - Tries for higher priority

## DIRECT LABOR STATISTICS

| ITEM | EXPECTED HOURS | STANDARD HOURS | | SIMULATED AVERAGE LABOR HOURS | STANDARD DEVIATION | SIMULATED MINIMUM LABOR HOURS | SIMULATED MAXIMUM LABOR HOURS | NU SA |
|---|---|---|---|---|---|---|---|---|
| 15113A | 123.49 | VAR 147.70 | (19.6) | 122.31 | 5.86 | 103.31 | 136.29 | |
| 15025A | 112.59 | 50.91 163.50 | (45.2) | 110.88 | 9.34 | 86.36 | 144.20 | |
| 15119A | 101.01 | 11.21 89.80 | 12.5 | 98.62 | 0.85 | 96.30 | 99.30 | |
| 15321A | 113.86 | 23.66 90.20 | 26.2 | 111.66 | 1.61 | 106.30 | 114.42 | |
| 15126A | 56.93 | 31.77 88.70 | (35.8) | 52.87 | 4.13 | 43.89 | 62.59 | |
| 15300A | 60.40 | 37.90 98.30 | (62.7) | 56.32 | 3.78 | 47.37 | 64.17 | |
| 15136A | 37.66 | 41.54 79.20 | (110.3) | 36.09 | 5.68 | 27.18 | 45.90 | |
| 15137A | 34.09 | 45.11 79.20 | (132.3) | 33.84 | 7.19 | 20.05 | 45.90 | |
| 15140A | 64.80 | 13.10 51.70 | 25.3 | 63.34 | 6.57 | 49.91 | 74.87 | |
| 15150A | 81.02 | 4.18 85.20 | (5.2) | 79.70 | 13.73 | 40.64 | 112.84 | |
| 15175A | 52.36 | 21.54 73.90 | (41.1) | 54.28 | 5.27 | 43.64 | 64.59 | |
| 15178A | 24.20 | 5.2 19.00 | (27.4) | 22.65 | 1.78 | 16.15 | 27.80 | |
| 15188A | 193.59 | .31 193.90 | (.2) | 192.79 | 32.32 | 114.08 | 246.00 | |
| 15189A | 193.59 | .31 193.90 | (.2) | 207.13 | 40.86 | 121.21 | 281.65 | |
| 15188ASUB1 | 14.88 | .12 15.00 | (.8) | 24.10 | 13.31 | 9.82 | 54.73 | |
| 15189ASUB1 | 14.88 | .12 15.00 | (.8) | 25.55 | 12.71 | 10.53 | 50.56 | |
| 15191A | 178.33 | 23.47 201.80 | (13.2) | 174.78 | 29.70 | 120.42 | 245.65 | |
| 15192A | 195.53 | 6.27 201.80 | (3.2) | 193.75 | 32.35 | 126.57 | 249.57 | |
| 15191ASUB1 | 14.70 | .3 15.00 | (2) | 24.40 | 12.76 | 8.75 | 50.38 | |
| 15192ASUB1 | 14.70 | .3 15.00 | (2) | 31.02 | 12.41 | 10.35 | 51.83 | |
| 15236A | 104.59 | 17.01 121.60 | (16.3) | 106.82 | 10.60 | 86.63 | 126.74 | |
| 15237A | 22.55 | 6.05 28.60 | (26.8) | ** NO VALUES RECORDED ** | | | | |
| 15249A | 161.99 | 51.49 110.50 | 46.6 | 158.75 | 21.23 | 103.03 | 196.62 | |
| 15250A | 159.32 | 48.32 11.00 | 43.5 | 158.01 | 18.83 | 106.60 | 194.39 | |
| 15237ASUB1 | 24.00 | 4.6 28.60 | (19.2) | 24.65 | 5.75 | 7.22 | 30.84 | |

PCN: 15140A

DRAFT

- Simulated flow hours are 36.4% higher than standard flow hours

- Inductions 1, 0, 4, 40
  -- sparatic (this will cause problems)

- Mechanic estimate 25.3% higher than standard
  -- contributes to variance

- Equipment
  -- 140 bench: until .06 1st
     --- queue quantity = Avg= .07 , MAX=4 Time=hrs=3.26
     --- operations 30-40, 100-270

  -- F135 - 08: until 19% 1st
     --- Queue quantity Avg=.61 Max=15 hrs=4.75
     --- Operations 50-90 (large queues these operations) 25 hrs vs 105.16

- Manpower FS: Until 40% (not available 37%)
  -- queue quantity Avg=18.94, Man=72, Time=1.10 hrs

- OC_ALC feels that the 36.4% error is due to the following reasons:
  -- large inductions 4Th. quarter (Production worked many different hours 10hrs, 12hrs, 2nd shift 2-5 days a week and weekends when necessary. Production also assigned personnel to specifically work these items 100% of time out of GS skill level, the model does not reflect this because 90% of the time GS skill is alternate for all other skills and not specifically assigned to work one item. Due to all these different Scenarios OC-ALC feels that the model handles this PCN the best way possible since it was their decision to keep data in a business as usual form and not Tailor it to handle special cases.

- Equipment Utilization is 24%, this looks low but keep in mind utilization is based on one year and 95% of the workload for this PCN was done in the 4th quarter.

- Bench utilization is low because mechanic uses bench to set tools etc., but the part is not actually tieing up the bench.

DRAFT

PCN: 15126A (Main Landing Gear Door)

- Simulated flow hours are 23.9% lower than STD flow hours

- Inductions 13, 16, 20, 20
  -- Consistent

- Mechanic Estimate is 55.8% lower than standard
  -- Contributes to variance

-- Equipment
  -- 126 bench utility 14%
    --- queue quantity Avg = .01 MAX = 5 Hrs = .33
    --- operations 30-70 and 210 -220

  -- F335 - 09 util 32%
    --- operations 80-200 (19.5 Hrs vs 93.89 hr)
    --- queue quantity Avg=.05, MAX=7, hrs=.42

- Manpower F8 util = 40% (not available 37% time)
  --- queue quantity Avg=18.94 MAX=72, Time=1.10

- OC-ALC feels that the 23.9% error is due to the mechanics estimate and personnel shortage. The model basically depict the "As Is" condition for FY88.

DRAFT

PCN: 15119A (Main Landing Gear Door)

- Simulated Hrs is 25.2% higher than STD hours

- Induction 13, 16, 20, 20
  -- Consistant

- Mechanic estimated flow-times 12.5% higher than std.
  -- This plays in the variance

- Equipment
  -- 119 bench: util 46% day
  --- Operation 30-60, 180-200, 230 (53.2hrs 52.7% vs 167.47)
  --- Queue quantity Avg=.51 Max=11 Hrs = 2.21
  --F335-08 - utili=40%
  --- Operation 70-170, 210 (18.93Hrs vs 77.06 Hrs)
  --- Queue quantity Avg=.32 Max=10 Hrs=1.91

- Manpower FS - util = 40 (unavailable 37%)

- OC-ALC feels that the 25.2% error is due to personnal shortage and mechanics estimate, since model shows basically what happens on the shop floor.

PCN: 15175A

DRAFT

- Simulated flow hours are 35.8% higher than standard flow hours

- Inductions 25. 12. 8. 26
  -- Sporatic (most work done 1st and 4th quarter)

- Mechanic Estimate is 41.1% lower than standard
  -- unusual situation the simulated flow time is higher that standard and mechanics estimate is lower

- Equipment
  - 175 bench: util 4%
    -- operation 20, 40, 60, 425, 480
    -- queue quantity = Avg =.01 , Max=2. Time=.9 Hrs -
  F135 -18: 64% (91% 1st and 2nd quarter)
    --- operation 70-310
    --- queue quantity Avg=.66 Max=9 Time= 1.48 Hrs

- Manpower FS: Util - 40% (not available 37%)
  -- Queue quantity Avg=18.94 Max=72. Time=1.10

- Bench 175 utilization so low because mechanic actual uses bench for tools and personnel items. the part does not tie up the bench it ties up the fixture.

DRAFT

PCN: 15321A (Main landing Gear Door)

- Simulated Hrs are 23.2% higher than STD hours

- Inductions 13, 16, 20, 20
  -- Consistant

- Mechanic Estimates 26.2% higher than STD
  -- This definitely contributes to variance

- Equipment
  -- 119 bench util 46%
     --- operation 30-60, 230
     --- queue quantity Avg =.51, MAX=11 Hrs=2.21
  -- F335-08 Util 40%
     --- operations 70-220
     --- queue quantity Avg=.32 MAX=10, Hrs=1.91

- Manpower FS - Util

- CC_ALC feels that the 23.2% error is due to personnel shortage and mechanics estimate. Model basically depicts the "As Is" condition for FY82.

DRAFT

PCN: 15300A (Main Landing Gear Door)

- Simulated flow hours are 25.5% lower than standard flow hours

- Inductions 13, 16, 20, 20
  - consistent

- Mechanics estimate is 62.7% lower than standard
  -- contributes to variance

- Equipment
  -- 126 bench util=14%
     --- Operation 30-70
     --- queue quantity=Avg=.01, Max=5 Hrs=.33
  -- F335-09 Util=32%
     --- Operations 80-220
     ---Queue quantity = Avg .05, Max 7, Hrs =.42

- Manpower FS utility 40% (not available 37%)
  -- queue quantity Avg=4.75, Max=15, Time = .77hrs

- OO_ALC feels that 25.5% error is due to the mechanics estimate and personnel shortage. The model basically depicts the "As Is" condition for FY88.

# TECHNOLOGY INSERTION ENGINEERING SERVICES
# UNIVERSAL DEPOT OPERATIONS SIMULATOR (UDOS)
# VERSION 2.0
# VALIDATION AND BRAINSTORMING SESSION
# FOR
# OKLAHOMA CITY AIR LOGISTICS CENTER (OC-ALC)
# RESOURCE CONTROL CENTER (RCC) MABPAB
# 22-24 MAY 1989

## VALIDATION MINUTES

CONTRACT NO. F33600-88-D-0567


TRIXIE BROWN
AFLC/MAQF

RICARDO BOLANOS
MDMSC

LOU MAVROS
MANAGER, PROCESS
CHARACTERIZATION
MDMSC

*MCDONNELL DOUGLAS*
*McDonnell Douglas Missile Systems Company*
*St. Louis, Missouri 63166-0516 (314) 232-0232*

## 1.0 PURPOSE AND OBJECTIVE

This validation and brainstorming session was conducted at the Oklahoma City Air Logistics Center (OC-ALC), Tinker AFB, building 95 on 22-24 May 1989 to perform validation using the Universal Depot Operations Simulator (UDOS) Version 2.0 with Resource Control Center (RCC) MABPAB Sheet Metal Shop data sets. On the afternoon of 24 May 1989, after conditional validation of the Model, a Brainstorming Session, involving the same participants, was conducted.

The objective of the UDOS 2.0 Validation was to establish the MABPAB Model as a valid baseline characterization of the RCC "As-Is" condition.

The objective of the Brainstorming Session was to identify the Taguchi factors and levels to be used in UDOS 2.0 model experimentation for MABPAB.

## 2.0 SUMMARY

The following presentations were made during the OC-ALC/MABPAB UDOS 2.0 Validation:

- Introduction - Mr. Earl Stamps OC-ALC/MABEBS
- MABPAB Overview - Mr. Ricardo Bolanos MDMSC
- Model Input Profiles - Mr. Ricardo Bolanos MDMSC
- Model Expectations - Mr. Ricardo Bolanos MDMSC
- Model Output Profiles - Mr. Scott Vroman MDMSC
- Conclusions - Mr. Ricardo Bolanos MDMSC

No formal presentations were made during the Brainstorming Session. This session was conducted as described in paragraph 2.7.

All discussions during the Validation and Brainstorming Session are summarized in the following subordinate paragraphs. The list of attendees, revised agenda, presentation materials, validation form, action items and model input/output file printouts are included as enclosures referenced in paragraphs 3.0 through 8.0 respectively.

## 2.1 INTRODUCTION

Mr, Earl Stamps, MABEBS Branch Manager, introduced the purpose of the session: validation of the MABPAB UDOS 2.0 Model. Subsequently, Mr. Stamps asked each participant to introduce himself/herself to the group by stating his/her name and the organization he/she represented. (Enc. 1)

## 2.2 MABPAB OVERVIEW

Mr. Ricardo Bolanos, MDMSC representative and session chair-person, opened by stating that this was the culmination of MDMSC/ALC effort. He emphasized the fact that it was the total cooperation of all MABPAB personnel that enabled MDMSC personnel to arrive at a valid model of MABPAB. Mr. Bolanos specifically thanked Mr. Earl Stamps, Mr. Jim Dodson, Mr. Larry Mullinax and Ms. Janis Wood for their considerable contributions to the MABPAB process characterization effort. After a brief review of the MABPAB Process Characterization schedule, the Flow Process Charts utilized to depict RCC "As-Is" condition and an explanation of the process that would be used to validate the MABPAB UDOS 2.0 Model, Mr. Bolanos proceeded to review the Model input data profiles.

## 2.3 MODEL INPUT DATA PROFILES

### 2.3.1 Workload Profile

Mr. Bolanos explained that Mr Stamps had provided FY88 actual production figures which enabled development of an approximation of workload percentages for MABPAB. Ricardo used Item Codes 15025A, 15113A, 15140A and 15150A as examples to explain the fluctuations in the fourth quarter workload which would require special conditions to accomplish this workload given the resources and time available. A lengthy discussion followed , during which explanations were given of the special conditions that enabled this performance.

### 2.3.2 Manpower Profile

Next, Mr. Bolanos presented the manpower profile of MABPAB. He stated that the basis for this profile was FY88 data gathered from extensive interviews and record review. The labor profile presented was divided into Work Week (Monday - Friday, Shifts 1 - 3), Week Ends (Saturday & Sunday, Shifts 1 - 3) and Holidays (Shifts 1 - 3). Each category was further subdivided into quarters. Mr. Bolanos went on to explain the Quantity Available versus Manpower Available sections of the profile. He explained

that the 5.6 and 7.1 manpower factors presented provide an ability for the model to account for time not available by each individual due to breaks, absence, vacation, training, etc. in a given eight hour work shift.

### 2.3.3 Equipment Profile

The equipment profile for MABPAB was presented next. Mr. Bolanos explained that the equipment profile addresses large pieces of equipment only (not hand tools). He went on to explain that unscheduled maintenance down time (MTBF & MTTR) data was not available for MABPAB. (MTBF and MTTR data for MABPAB equipment has not been retained. Mr. Bolanos went on to explain the data pertinent to the equipment characterized, tied to the 80/20 workload of the RCC was available. In response to a question from Mr. Stamps, Ricardo explained that the 43% figure shown for some equipment under "% USED NOT AVAILABLE" represents time that the equipment is in use for tasks not defined in the 80/20 workload.

### 2.3.4 Operation Profile

Ricardo explained that this profile is directly related to the Flow Process Chart presented earlier in his presentation. He proceeded to describe the profile using the example Flow Process Chart. He explained that the frequency (Occurrence Factor) for each operation was obtained from shop floor interviews with mechanics. In response to Mr. Gene Leiterman's question regarding supervisory involvement in these occurrence factor assessments, Ricardo responded that both mechanics and supervisors were involved in these assessments. In addressing the lack of WCD history, Ricardo explained that the bench mark for evaluating the reality of the interview data was comparison of the model with Standard Flow Days which would be covered later in the presentation. It was also stated that the historical flow times that were available were of insufficient accuracy for meaningful comaprison. The following are examples:

| PART NO. | WCD FLOW HOURS | SIMULATED FLOW HOURS |
|---|---|---|
| 15025A | 1,628 | 848 |
| 15113A | 1,2,76 | 810 |
| 15119A | 1,178 | 571 |
| 15175A | 4,183 | 716 |

It would not be possible to simulate FY88 production actuals using the historical WCD data for these parts.

### 2.3.5 Disassembly & Assembly Profile

This profile was also explained in relation to the Flow Process Chart.

## 2.4 MODEL EXPECTATIONS

Mr. Bolanos stated that in order to validate the model three items must be established to the satisfaction of the group:

- The Model does Simulate an Approximation of Reality
- The Model Establishes a Baseline
- The Model Provides a Useful Tool For Exploring the Effect of Change.

## 2.5 MODEL OUTPUT PROFILES

### 2.5.1 Process Times Summary

Ricardo presented the 80/20 work load simulation flow hours summary for one year of RCC production: waiting for resources, processing hours, back shop hours. Lengthy discussions regarding the basis for expected flow days. Due to the lack of historical WCD data for FY88, MDMSC used shop floor interview data to calculate these expected flow days and then compared these calculations to standard flow days. After much detailed discussion and lengthy explanations, it was agreed that what was actually produced in FY88 was input to the model and that this would be the key to validating model throughput. Next lengthy and detailed discussions of personnel utilization and overtime. Mr. Stamps summarized this by stating that he had no problem moving the resources around to match the real world, provided the bottom line remained the same. Ricardo introduced Mr. Scott Vroman who conducted the remainder of the discussions and presentations concerning Model output.

### 2.5.2 Workload Distribution Profile

Mr. Vroman explained this profile with er ~hasis on what MABPAB actually produced in FY88 versus what the model simulation produced.

### 2.5.3 Direct Labor Hours Profile

After explaining the profile, Scott was asked how closely the mechanics interview times compared with the standard times. He responded that in many cases they were very close and that in some cases they varied widely. He went on to state that since the later case represented only 2 - 3% of the workload, the impact on model performance was negligible. Ricardo stated that a summary report of interviews versus standard hours, by part number, will be available and that any statistical model output data will also be available. There was consensus that the numbers, when compared to control numbers are very close.

### 2.5.4 Estimated Flow Days Vs. Simulated Flow Days Profile

There was also concurrence that this profile made sense. Mr. Stamps emphasized that the group must be satisfied that this profile represents a good baseline. Scott suggested that this could be accomplished by comparing estimated vs.simulated columns in the profile, using the estimated flow days column as the control column.

### 2.5.5 Processing Summary

Scott presented three summaries: back shop hours, initial waiting hours (for manpower , equipment and subcomponents) and processing hours. Mr. Stamps and Ms. Wood offered clarification that the initial waiting represents the total time waiting between operations. A lengthy discussion regarding the results presented for part numbers 15113A and 15025A.

### 2.5.6 Back Shop Hours and Occurrence Factor Profile

This presentation resulted in lengthy discussion and explanation of the use of interview data for back shop occurrence factors. Various control documents were reviewed. It was finally agreed that historical data would be the best source of this model input. However, due to the lack of accurate history, the interview data was the best currently available and must be used. Inconsistencies similar to the examples given in paragraph 2.3.4 existed for back shop historical data.

### 2.5.7 What If Scenarios

Scott proceeded to present three "What If?" scenarios. First, he explored the results of reducing all skill code manpower by 20%. He explained that any reduction in manpower must consider the workload. Otherwise, queues will build all over the place.Discussions regarding these effects.

The second "What If?" scenario presented involved reducing only the ES and SF skill codes by 20%. This exercise demonstrated that there was little impact on model output due to the fact that ES and FS skill codes are primarily involved with operations outside of the 80/20 workload of the RCC.

The third "What If?" scenario addressed the effects of increasing the workload for part 15113A to 90 per quarter. This resulted in an increase in flow time from 46 days to 70 days

### 2.5.8 Trial Install of MABPAB UDOS 2.0 Model on OC-ALC VAX

There were discussions concerning the desirability to trial install and run the model on the OC-ALC VAX computer to insure that it would run properly when delivered. Mr. Mavros, MDMSC Deputy Program Manager, agreed that this would be desirable for all concerned and directed MDMSC personnel in St. Louis to cut a tape of all required files and ship the tape to OC-ALC. Mr. Mavros emphasized that this would not constitute delivery of the software which was governed by other contractual requirements. The tape was subsequently shipped and a trial run was attempted. This attempt was unsuccessful due to problems with the tape. Mr. Vroman returned to OC-ALC 1 June 1989 with a good tape and successfuly completed the trial run.

## 2.6 VALIDATION & CONCLUSIONS

All attendees concurred that the model of MABPAB met the expectations established for validation, and the Validation Form was signed by Mr. Stamps, Ms. Brown and Mr. Bolanos. This validation is contingent on MDMSC performance of the two action items cited on the Validation Form.

# ISSUES to VALIDATE* 5/24/89

* 1) Print-out with NEW NUMBERS Down 10.87% by OP
{ UP 11.2% MP EFF.
{ Down 19.5%

2) GS ALTERNATE to ALL.

3) 15140A 4th Qtr
- EXCEPTIONAL RISE
- 4th Qtr high INDUCTIONS
- CHERRY picked.
- Assigned SELECTED PERSONEL to that ARE
- 2nd shift.

4) 19.5% MAN. POWER REDUCTION.

5) CHANGE STDS to Update REV. on 15119A, 15321A 15126A, 15300A, 15136A, 15137A, 15175A & 152

* 6) LOAD Model & RUN ON VAX at ALC.

# TI VALIDATION FORM

| RCC | ALC |
|---|---|
| MABPAB | OC-ALC |

TITLE SHEET METAL SHOP

REMARKS THE SIMULATION MODEL FOR OC-ALC MABPAB, SHEET METAL SHOP, IS AN APROXIMATION OF THE MABPAB "AS IS" CONDITION AND ESTABLISHES A BASELINE RECOMMENDED TO BE ACCEPTED AND USED FOR EXPERMENTATION AND RELEASE. THE FOLLOWING CONTINGENCY APPLY FOR FINAL ACCEPTANCE:

1. VERIFY THAT THE MODEL WILL LOAD AND RUN ON THE OC-ALC VAX SYSTEM.
   MDMSC WILL BRING THE MODEL TO OC-ALC, LOAD AND RUN THE MODEL TO ASSURE COMPATABILITY WITH THE OC-ALC VAX SYSTEM AS A CONDITION FOR FINAL ACCEPTANCE OF THE MODEL AND THE DATA FROM BOTH THE OC-ALC & MDMSC VAX SYSTEMS ARE COMPARABLE
2. PROVIDE TO OC-ALC AND HQAFLC A COPY OF THE UPDATED MODEL FLAT FILES TO VERIFY THAT INPUTS MADE TO THE MANPOWER AND OPERATIONS PROFILES CHANGED THE OUTPUTS AS PREDICTED PROVIDING AN ACCEPTED BASELINE.
   CHANGES
   (a) REDUCTION OF 10.87% BY EACH OPERATIONS
   (b) UPGRADE MANPOWER FACTOR BY 11.2%
   (c) REDUCTION OF 19.5% OF MANPOWER

APPROVAL RECOMMENDED

| ALC | AFLC REP. | MDMSC |
|---|---|---|
| Earl E. Stamps 5-24-89 | Truie R Brown 5/24/89 | R Bojanowski 5/24/89. |

AFLC HQ..

D. Cripe

ALC: OC RCC: MABPAB QUARTER: 4 DATE: 25-MAY-89 TIME: 14:52:38 REPT.ID: VALIDATI PAGE:

FLOW CYCLE TIME STATISTICS

| ITEM | STAMPED WCD's OBS # | STAMPED WCD's FLOW HOURS | HISTORICAL FLOWTIME HOURS | AVERAGE SIMULATED FLOW TIME HOURS | STANDARD DEVIATION | SIMULATED MINIMUM FLOW TIME HOURS | SIMULATED MAXIMUM FLOW TIME HOURS | NUMBER OF SAMPLES |
|---|---|---|---|---|---|---|---|---|
| 15113A | 54 | 1,276 | 864.00 | 640.87 | 73.59 | 508.64 | 843.13 | 242 |
| 15025A | 28 | 1,628 | 864.00 | 661.01 | 166.56 | 389.47 | 1083.57 | 220 |
| 15119A | 44 | 1,178 | 432.00 | 514.93 | 66.95 | 435.47 | 702.18 | 67 |
| 15321A | 20 | 1,015 | 456.00 | 515.01 | 86.68 | 390.79 | 794.86 | 68 |
| 15126A | 36 | 893 | 432.00 | 330.81 | 38.06 | 247.30 | 509.26 | 68 |
| 15300A | 3 | 376 | 456.00 | 326.96 | 28.22 | 267.54 | 387.16 | 67 |
| 15136A | 18 | 767 | 504.00 | 481.76 | 76.47 | 365.43 | 725.61 | 75 |
| 15137A | 11 | 441 | 504.00 | 416.38 | 59.13 | 317.82 | 582.87 | 70 |
| 15140A | 19 | 1,235 | 504.00 | 671.74 | 207.76 | 412.53 | 1061.05 | 23 |
| 15150A | 36 | 1,453 | 744.00 | 751.97 | 168.68 | 412.52 | 1181.22 | 123 |
| 15175A | 24 | 4,183 | 528.00 | 581.05 | 93.96 | 435.79 | 868.23 | 69 |
| 15178A | 2 | 360 | 456.00 | 402.53 | 43.81 | 338.54 | 548.18 | 202 |
| 15188A | 40 | 1,011 | 840.00 | 918.98 | 112.95 | 630.00 | 1156.08 | 57 |
| 15189A | 44 | 873 | 840.00 | 956.21 | 128.23 | 655.95 | 1203.81 | 56 |
| 15188ASUB1 | 5 | 715 | 0.00 | 262.87 | 50.57 | 170.50 | 362.56 | 57 |
| 15189ASUB1 | 10 | 814 | 0.00 | 265.05 | 49.75 | 171.03 | 363.44 | 60 |
| 15191A | 41 | 1,028 | 864.00 | 940.36 | 115.16 | 699.69 | 1178.98 | 49 |
| 15192A | 9 | 731 | 892.00 | 992.57 | 113.47 | 798.63 | 1230.87 | 34 |
| 15191ASUB1 | 9 | 3235 | 0.00 | 258.81 | 50.77 | 169.84 | 360.40 | 50 |
| 15192ASUB1 | 6 | 1,728 | 0.00 | 267.79 | 61.38 | 170.82 | 362.70 | 37 |
| 15236A | 13 | 1,639 | 840.00 | 709.06 | 57.03 | 606.02 | 871.31 | 34 |
| 15237A | N/A | N/A | 384.00 | ** NO VALUES RECORDED ** | | | | |
| 15249A | 4 | 156 | 984.00 | 856.53 | 106.20 | 652.01 | 1056.38 | 68 |
| 15250A | 7 | 833 | 984.00 | 850.26 | 103.44 | 679.79 | 1153.04 | 67 |
| 15237ASUB1 | 8 | 1,731 | 0.00 | 223.96 | 39.11 | 143.25 | 312.24 | 34 |

UPDATE THE MANPOWER FACTOR WITH OVERTIME

IN DS, ES, FS UPGRADE O.T FACTOL FROM 7.1 TO 7.24

IN 6,5 INCREASE MANPOWER LEVELS BY 7, 6, 7, 6

80.5% WL

1st → 4.50

2nd → 4.59

3rd → 4.75

4Th → 4.67

5.83

| | | | | | |
|---|---|---|---|---|---|
| INDUCTIONS OF ITEM 15113A (MISTR) | : | [illegible] | 60 | 53 | 70 |
| INDUCTIONS OF ITEM 15025A (MISTR) | : | 56 | 55 | 54 | 75 |
| INDUCTIONS OF ITEM 15114A (MISTR) | : | 13 | 16 | 20 | 20 |
| INDUCTIONS OF ITEM 15321A (MISTR) | : | 13 | 16 | 20 | 20 |
| INDUCTIONS OF ITEM 15126A (MISTR) | : | 13 | 16 | 20 | 20 |
| INDUCTIONS OF ITEM 15300A (MISTR) | : | 13 | 16 | 20 | 20 |
| INDUCTIONS OF ITEM 15136A (MISTR) | : | 13 | 18 | 23 | 22 |
| INDUCTIONS OF ITEM 15137A (MISTR) | : | 13 | 16 | 23 | 21 |
| INDUCTIONS OF ITEM 15140A (MISTR) | : | 1 | 0 | 4 | 4 |
| INDUCTIONS OF ITEM 15150A (MISTR) | : | 35 | 35 | 38 | 46 |
| INDUCTIONS OF ITEM 15175A (MISTR) | : | [illegible] | 12 | 8 | [illegible] |
| INDUCTIONS OF ITEM 15178A (MISTR) | : | 36 | 50 | 56 | 75 |
| INDUCTIONS OF ITEM 15188A (MISTR) | : | 13 | 13 | 15 | 17 |
| INDUCTIONS OF ITEM 15189A (MISTR) | : | 13 | 15 | 15 | 17 |
| INDUCTIONS OF ITEM 15188ASUB1 (MISTR) | : | 13 | 13 | 15 | 17 |
| INDUCTIONS OF ITEM 15189ASUB1 (MISTR) | : | 13 | 15 | 15 | 17 |
| INDUCTIONS OF ITEM 15191A (MISTR) | : | 11 | 11 | 16 | 17 |
| INDUCTIONS OF ITEM 15192A (MISTR) | : | 6 | 6 | 10 | 11 |
| INDUCTIONS OF ITEM 15191ASUB1 (MISTR) | : | 11 | 11 | 16 | 17 |
| INDUCTIONS OF ITEM 15192ASUB1 (MISTR) | : | 6 | 6 | 10 | 11 |
| INDUCTIONS OF ITEM 15236A (MISTR) | : | 6 | 10 | 9 | 9 |
| INDUCTIONS OF ITEM 15237A (MISTR) | : | 0 | 0 | 0 | 0 |
| INDUCTIONS OF ITEM 15249A (MISTR) | : | 13 | 18 | 23 | 20 |
| INDUCTIONS OF ITEM 15250A (MISTR) | : | 13 | 16 | 23 | 20 |
| INDUCTIONS OF ITEM 15237ASUB1 (MISTR) | : | 6 | 9 | 10 | 9 |
| TOTAL ITEM INDUCTIONS | : | 405 | 445 | 519 | 669 |



TOTAL INDUCTIONS

| | 1ST QTR | 2ND QTR | 3RD QTR | 4TH QTR |
|---|---|---|---|---|

FLOW /CLE TIME STATISTICS

| NUMBER OF ITEM SAMPLES | HISTORICAL FLOWTIME HOURS | AVERAGE SIMULATED FLOW TIME HOURS | STANDARD DEVIATION | SIMULATED MINIMUM FLOW TIME HOURS | SIMULATED MAXIMUM FLOW TIME HOURS |
|---|---|---|---|---|---|
| 15113A 234 | 864.00 | 828.94 | 103.23 | 579.25 | 1084.50 |
| 15025A 212 | 864.00 | 848.63 | 209.84 | 459.69 | 1276.36 |
| 15119A 64 | 792.00 | 586.63 | 88.70 | 482.98 | 822.11 |
| 15321A 65 | 792.00 | 578.91 | 107.63 | 459.47 | 870.75 |
| 15126A 68 | 792.00 | 351.01 | 36.93 | 271.79 | 509.41 |
| 15300A 67 | 792.00 | 360.16 | 32.67 | 293.97 | 438.52 |
| 15136A 72 | 816.00 | 490.58 | 62.41 | 391.67 | 654.72 |
| 15137A 69 | 816.00 | 455.43 | 54.19 | 365.89 | 606.70 |
| 15140A 17 | 504.00 | 692.48 | 230.06 | 438.75 | 1250.68 |
| 15150A 116 | 744.00 | 811.12 | 178.99 | 510.09 | 1300.51 |
| 15175A 68 | 912.00 | 715.37 | 157.21 | 459.68 | 1053.69 |
| 15178A 207 | 456.00 | 397.97 | 35.19 | 340.34 | 525.68 |
| 15188A 57 | 840.00 | 1053.72 | 134.41 | 727.48 | 1491.41 |
| 15189A 53 | 840.00 | 1087.84 | 125.47 | 844.94 | 1348.59 |
| 15188ASUB1 57 | 0.00 | 271.28 | 49.40 | 174.96 | 389.40 |
| 15189ASUB1 59 | 0.00 | 257.90 | 47.81 | 174.16 | 387.38 |
| 15191A 47 | 864.00 | 1060.67 | 118.03 | 751.85 | 1348.78 |
| 15192A 32 | 892.00 | 1170.40 | 151.25 | 892.64 | 1445.41 |
| 15191ASUB1 51 | 0.00 | 256.66 | 48.20 | 173.66 | 365.46 |
| 15192ASUB1 38 | 0.00 | 281.76 | 49.64 | 175.59 | 387.20 |
| 15236A 33 | 1056.00 | 767.39 | 55.50 | 675.28 | 915.00 |
| 15237A | 384.00 | ** NO VALUES RECORDED ** | | | |
| 15249A 67 | 984.00 | 975.65 | 110.33 | 772.40 | 1201.10 |
| 15250A 69 | 984.00 | 942.94 | 1[illegible].85 | 702.79 | 1[illegible].65 |
| 15237ASUB1 | 0.00 | 240.76 | 43.48 | 145.30 | [illegible] |

## DIRECT LABOR STATISTICS

| ITEM | SIMULATED MAXIMUM LABOR HOURS | NUMBER OF SAMPLES | EXPECTED HOURS | STANDARD HOURS | SIMULATED AVERAGE LABOR HOURS | STANDARD DEVIATION | SIMU MIN LA HO |
|---|---|---|---|---|---|---|---|
| 15113A | | 234 | 123.49 | 147.70 | 137.57 | 5.98 | 10 |
| 2.95 | 137.72 | 212 | 112.59 | 163.50 | 111.07 | 9.16 | 8 |
| 15025A | | 64 | 101.01 | 89.80 | 99.8. | 0.73 | 9 |
| 5.30 | 99.30 | 65 | 113.86 | 90.70 | 111.69 | 1 47 | 10 |
| 15021A | | 68 | 56.93 | 88.70 | 53.70 | 3.87 | 4 |
| 6.75 | 114.87 | 67 | 60.40 | 98.30 | 57.03 | 4.1. | 4 |
| 15125A | | 72 | 37.66 | 79.20 | 36.47 | 5.30 | 3 |
| 5.89 | 60.69 | 69 | 34.09 | 79.20 | 34.1. | 6.70 | |
| 15700A | | 17 | 64.80 | 51.70 | 64.96 | 4.89 | 5 |
| 7.7 | 64.17 | 118 | 81.02 | 85.20 | 80.31 | 13.31 | 4 |
| 15136A | | 68 | 52.36 | 73.90 | 52.05 | 5 16 | 4 |
| 7.18 | 45.90 | 207 | 24.20 | 19.00 | 22.63 | 1.93 | 1 |
| 15137A | | 57 | 193.59 | 120.70 | 194.00 | 38.01 | 11 |
| 0.05 | 45.90 | 53 | 193.59 | 120.70 | 202.71 | 38.03 | 14 |
| 15140A | | 57 | 14.88 | 15.00 | 20 08 | 14.50 | |
| 7.04 | 72.20 | 59 | 14.88 | 15.00 | 24.01 | 17.25 | |
| 15150A | | 47 | 178.33 | 118.70 | 179.33 | 36.40 | 9 |
| 5.89 | 113.39 | 32 | 195.53 | 118.70 | 189.12 | 36.93 | 11 |
| 15175A | | 51 | 14.70 | 15.00 | 21.87 | 13.03 | |
| 4.76 | 65.25 | 38 | 14.70 | 15.00 | 30.72 | 13.84 | 1 |
| 15178A | | 33 | 104.59 | 121.60 | 103.60 | 10.68 | 8 |
| 5.13 | 27.80 | | 22.55 | 28.60 | ** NO VALUES RECORDED ** | | |
| 15188A | | 161.99 | 110.50 | 163.22 | 20.11 | 11 | |
| 3.19 | 292.34 | 67 | 159.32 | 111.00 | 155.33 | 23.65 | 9 |
| 15189A | | 69 | 24.00 | 28.60 | 23.81 | 4 95 | |
| 1.75 | 273.63 | 34 | | | | | |
| 15188ASUB1 | | | | | | | |
| 8.93 | 57.01 | | | | | | |
| 15189ASUB1 | | | | | | | |
| 9.82 | 53.06 | | | | | | |
| 15191A | | | | | | | |
| 5.46 | 261.24 | | | | | | |
| 15192A | | | | | | | |
| 4.98 | 271.85 | | | | | | |
| 15191ASUB1 | | | | | | | |
| 9.54 | 53.50 | | | | | | |
| 15192ASUB1 | | | | | | | |
| 0.54 | 52.79 | | | | | | |
| 15196A | | | | | | | |
| 9.92 | 124.07 | | | | | | |
| 15197A | | | | | | | |
| 15149A | | | | | | | |
| 7.29 | 197.96 | | | | | | |
| 15150A | | | | | | | |
| 7.24 | 196.62 | | | | | | |
| 15297ASUB1 | | | | | | | |

HIT / MISS . 05 18:18 MODEL TELM

ALC: DC RCC: MABPAB QUARTER: 4 DATE: 23-MAY-89 TIME: 16:08:26 REPT.1
O: VALIDATI PAGE: 6

BACKSHOP DWELL SUMMARY

| ITEM | AVERAGE SIMULATED BACKSHOP HOURS | STANDARD DEVIATION | SIMULATED MINIMUM BACKSHOP HOURS | SIMULATED MAXIMUM BACKSHOP HOURS | NUMBER OF SAMPLES |
|---|---|---|---|---|---|
| 15113A | 192.00 | 0.00 | 192.00 | 192.00 | 234 |
| 15025A | 150.68 | 11.52 | 144.00 | 192.00 | 21[illegible] |
| 15119A | 96.00 | 0.00 | 96.00 | 96.00 | [illegible] |
| 15321A | 96.00 | 0.00 | 96.00 | 96.00 | 65 |
| 15126A | 96.00 | 0.00 | 96.00 | 96.00 | [illegible] |
| 15300A | 96.00 | 0.00 | 96.00 | 96.00 | [illegible] |
| 15136A | 168.00 | 0.00 | 168.00 | [illegible] | [illegible] |
| 15137A | 168.00 | 0.00 | [illegible] | [illegible] | [illegible] |
| 15140A | 96.00 | 0.00 | 96.00 | [illegible] | [illegible] |
| 15150A | 151.12 | 16.09 | 120.00 | 168.00 | [illegible] |
| 15175A | 145.00 | 0.00 | 145.00 | [illegible] | [illegible] |
| 15178A | 192.00 | 0.00 | 192.00 | 192.00 | 207 |
| 15186A | 168.00 | 0.00 | 168.00 | 168.00 | [illegible] |
| 15139A | 163.02 | 10.90 | 120.00 | 168.00 | 53 |
| 15188ASUB1 | 96.00 | 0.00 | 96.00 | 96.00 | [illegible] |
| 15189ASUB1 | 96.00 | 0.00 | 96.00 | 96.00 | [illegible] |
| 15191A | 167.83 | 15.06 | 120.00 | 192.00 | [illegible] |
| 15192A | 164.25 | 8.85 | 144.00 | 168.00 | [illegible] |
| 15191ASUB1 | 120.00 | 0.00 | 120.00 | 120.00 | [illegible] |
| 15192ASUB1 | 120.00 | 0.00 | 120.00 | 120.00 | 38 |
| 15236A | 277.09 | 15.98 | 264.00 | 312.00 | [illegible] |
| 15237A | ** NO VALUES RECORDED ** | | | | |
| 15249A | 120.00 | 0.00 | 120.00 | 120.00 | [illegible] |
| 15250A | 120.00 | 0.00 | 120.00 | 120.00 | 69 |
| 15257ASUB1 | 48.00 | 0.00 | 48.00 | 48.00 | 34 |

PROCESS TIMES SUMMARY

| FLOW ITEM | BACKSHOP HOURS | BACKSHOP % | HISTOR. NUMBER OF FLOW HOURS SAMPLES | SIMULATED FLOW HOURS | WAITING FOR RESOURCES HOURS | WAITING FOR RESOURCES % | PROCESSING FL HOURS | PROCESSING FL % |
|---|---|---|---|---|---|---|---|---|
| 15113A | 192.0 | 23.2% | 864.0 234 | 828.9 | 263.6 | 31.8% | 373.4 | 45.0% |
| 15025A | 150.7 | 17.8% | 864.0 212 | 848.6 | 402.9 | 47.5% | 295.0 | 34.8% |
| 15119A | 96.0 | 16.4% | 792.0 64 | 586.6 | 127.3 | 21.7% | 363.3 | 61.9% |
| 15136A | 96.0 | 16.6% | 792.0 65 | 528.9 | 98.1 | 18.1% | 354.8 | 65.3% |
| 15126A | 96.0 | 27.3% | 792.0 68 | 351.0 | 68.5 | 19.5% | 186.4 | 53.1% |
| 15300A | 96.0 | 26.7% | 792.0 67 | 360.2 | 69.5 | 19.3% | 194.6 | 54.6% |
| 15136A | 163.0 | 34.2% | 816.0 72 | 490.6 | 91.8 | 18.7% | 230.7 | 47.0% |
| 15137A | 168.0 | 36.9% | 816.0 69 | 455.4 | 80.6 | 17.7% | 206.8 | 45.4% |
| 15140A | 96.0 | 13.9% | 504.0 17 | 692.5 | 236.1 | 34.1% | 360.4 | 52.0% |
| 15150A | 151.1 | 18.6% | 744.0 118 | 811.1 | 221.6 | 27.3% | 438.4 | 54.0% |
| 15175A | 145.0 | 20.3% | 912.0 68 | 715.4 | 234.2 | 32.7% | 336.2 | 47.0% |
| 15178A | 192.0 | 48.2% | 456.0 207 | 398.0 | 35.8 | 8.5% | 172.2 | 43.3% |
| 15188A | 166.0 | 15.9% | 840.0 57 | 1053.7 | 202.3 | 19.2% | 683.4 | 64.9% |
| 15189A | 163.0 | 15.0% | 840.0 53 | 1087.8 | 205.1 | 18.9% | 719.7 | 66.2% |
| 15188ASUB1 | 96.0 | 35.4% | 0.0 57 | 271.3 | 34.0 | 12.5% | 141.3 | 52.1% |
| 15189ASUB1 | 96.0 | 37.2% | 0.0 59 | 257.9 | 32.8 | 12.7% | 129.1 | 50.1% |
| 15191A | 167.8 | 15.8% | 864.0 47 | 1060.7 | 214.6 | 20.2% | 678.2 | 63.9% |
| 15192A | 164.2 | 14.0% | 892.0 32 | 1170.4 | 290.7 | 24.8% | 715.5 | 61.1% |
| 15191ASUB1 | 120.0 | 45.8% | 0.0 51 | 256.7 | 45.2 | 17.6% | 91.5 | 35.6% |
| 15192ASUB1 | 120.0 | 42.6% | 0.0 38 | 281.8 | 44.0 | 15.6% | 117.8 | 41.8% |
| 15236A | 257.1 | 36.1% | 1056.0 33 | 767.4 | 101.5 | 13.2% | 388.8 | 50.7% |
| 15237A | | | ** NO VALUES RECORDED ** | | | | | |
| 15249A | 120.0 | 12.3% | 984.0 67 | 975.6 | 156.3 | 16.0% | 699.4 | 71.7% |
| 15250A | 120.0 | 12.7% | 984.0 69 | 942.9 | 145.4 | 15.4% | 677.5 | 71.9% |
| 15237ASUB1 | 48.0 | 19.9% | 0.0 34 | 240.8 | 36.2 | 15.0% | 162.6 | 67.5% |

ALC: 0F RCC: MARPAR QUARTS: 1 PAGE

FOR OFFICIAL USE ONLY

ITEM INDUCTIONS

| | | | | 1ST QTR | 2ND QTR | 3RD QTR | 4TH QTR | YTD |
|---|---|---|---|---|---|---|---|---|
| INDUCTIONS | OF | ITEM | 15113A | 60 | 60 | 53 | 70 | [illegible] |
| INDUCTIONS | OF | ITEM | 15502 | 56 | 55 | 54 | 75 | [illegible] |
| INDUCTIONS | OF | ITEM | [illegible] | [illegible] | 16 | 20 | 20 | 69 |
| INDUCTIONS | OF | ITEM | 15321 | [illegible] | 16 | 20 | 20 | 69 |
| INDUCTIONS | OF | ITEM | [illegible] | [illegible] | 16 | 20 | 20 | 69 |
| INDUCTIONS | OF | ITEM | [illegible] | [illegible] | 16 | 20 | 20 | 69 |
| INDUCTIONS | OF | ITEM | [illegible] | [illegible] | 18 | 20 | 20 | 76 |
| INDUCTIONS | OF | ITEM | [illegible] | [illegible] | 16 | 20 | 21 | 73 |
| INDUCTIONS | OF | ITEM | [illegible] | [illegible] | 0 | 4 | 40 | 45 |
| INDUCTIONS | OF | ITEM | [illegible] | [illegible] | 2 | 3 | 66 | [illegible] |
| INDUCTIONS | OF | ITEM | [illegible] | [illegible] | 1 | [illegible] | 2 | [illegible] |
| INDUCTIONS | OF | ITEM | [illegible] | [illegible] | 5 | [illegible] | 7 | [illegible] |
| INDUCTIONS | OF | ITEM | [illegible] | [illegible] | 13 | 15 | 17 | [illegible] |
| INDUCTIONS | OF | ITEM | [illegible] | [illegible] | 15 | 15 | 17 | [illegible] |
| INDUCTIONS | OF | ITEM | [illegible] | SUB1 | [illegible] | 15 | 15 | 17 |
| INDUCTIONS | OF | ITEM | [illegible] | SUB1 | [illegible] | 15 | 15 | 17 |
| INDUCTIONS | OF | ITEM | [illegible] | [illegible] | 11 | 11 | 16 | 17 |
| INDUCTIONS | OF | ITEM | [illegible] | [illegible] | 6 | 6 | 10 | 17 |
| INDUCTIONS | OF | ITEM | [illegible] | SUB1 | 11 | 11 | 16 | 17 |
| INDUCTIONS | OF | ITEM | [illegible] | SUB1 | [illegible] | [illegible] | 10 | 17 |
| INDUCTIONS | OF | ITEM | [illegible] | [illegible] | 6 | 10 | 9 | 9 |
| INDUCTIONS | OF | ITEM | [illegible] | [illegible] | 0 | 0 | 0 | 0 |
| INDUCTIONS | OF | ITEM | [illegible] | [illegible] | 13 | 18 | 20 | 74 |
| INDUCTIONS | OF | ITEM | [illegible] | [illegible] | 13 | 18 | 20 | 74 |
| INDUCTIONS | OF | ITEM | [illegible] | SUB1 | 6 | 9 | 10 | 9 |
| TOTAL ITEM INDUCTIONS | | | | | 405 | 445 | 519 | 669 |

C: OC RCC: MABPAD QUARTER: 4 DATE: 23-MAY-89 TIME: 07:42:11 REPT.ID: VALIDATI PAGE: 4

OU CYCLE TIME STATISTICS

| ITEM | HISTORICAL [illegible] | AVERAGE SIMULATED FLOW TIME HOURS | STANDARD DEVIATION | SIMULATED MINIMUM FLOW TIME HOURS | SIMULATED MAXIMUM FLOW TIME HOURS | NUMBER OF SAMPLES |
|---|---|---|---|---|---|---|
| 15113A | 864.00 | 698.55 | 99.19 | 506.60 | 941.06 | 236 |
| 15025A → | [illegible] | 685.27 | 206.26 | 386.12 | 1173.01 | 215 |
| 15119A | ~~792.00~~ 432 | 528.40 ✓ | 81.53 | 436.37 | 750.72 | 67 |
| 15321A | ~~792.00~~ 456 | 525.09 ✓ | 101.93 | 390.66 | 749.18 | 68 |
| 15126A | 792.00 432 | 322.04 ✓ | 28.77 | 245.40 | 414.40 | 66 |
| 15300A | 792.00 456 | 335.74 ✓ | 31.88 | 271.50 | 435.30 | 67 |
| 15136A | 816.00 504 | 454.56 | 51.07 | 365.07 | 583.20 | [illegible] |
| 15137A | 816.00 504 | 421.90 ✓ | 54.79 | 318.90 | 558.94 | [illegible] |
| 15140A → E | 504.00 | 675.82 | 265.73 | 384.[illegible] | 1250.24 | [illegible] |
| 15150A → E. | 744.00 | 737.58 | 162.00 | 463.25 | 1253.20 | [illegible] |
| 15175A | 912.00 528 | 626.18 ✓ | 117.72 | 435.34 | 915.27 | 67 |
| 15178A | 456.00 | 376.27 | 28.00 | 338.59 | [illegible] | [illegible] |
| 15183A | 840.00 | 962.29 | 99.72 | 771.50 | 1230.22 | 56 |
| 15189A | 840.00 | 1016.85 | 118.83 | 678.00 | 1277.80 | 56 |
| 15188ASUB1 | 0.00 | 243.52 | 47.48 | 172.12 | [illegible] | 56 |
| 15189ASUB1 | 0.00 | 255.36 | 40.18 | 172.80 | [illegible] | 60 |
| 15191A → | 864.00 | 953.69 | 108.77 | 654.06 | [illegible] | 49 |
| 15192A → | 892.00 | 1025.61 | 141.84 | 799.76 | [illegible] | 34 |
| 15191ASUB1 | 0.00 | 249.00 | 42.56 | 172.02 | [illegible] | 51 |
| 15192ASUB1 | 0.00 | 260.34 | 46.29 | 173.90 | [illegible] | 38 |
| 15236A | 1056.00 840 | 710.70 ✓ 48% | 49.30 | 630.66 | [illegible] | [illegible] |
| 15237A | 384.00 | ** NO VALUES RECORDED ** | | | | |
| 15249A → | 984.00 | 843.16 | 106.86 | 627.50 | 1176.00 | 66 |
| 15250A → | 984.00 | 863.03 | 104.83 | 650.79 | 1152.57 | [illegible] |
| 15237ASUB1 | 0.00 | 222.15 | 46.36 | 122.30 | [illegible] | [illegible] |

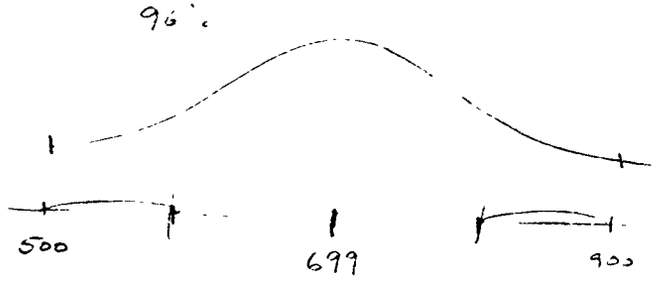

ALC: UC RCC: MABPAB QUARTER: 4 DATE: 23-MAY-89 TIME: 07:42:11 RPT: [illegible] PAGE:

DIRECT LABOR STATISTICS

| ITEM | EXPECTED HOURS | STANDARD HOURS | SIMULATED AVERAGE LABOR HOURS | STANDARD DEVIATION | SIMULATED [illegible] HOURS | SIMULATED [illegible] HOURS |
|---|---|---|---|---|---|---|
| [illegible]113A | 138.54 | 147.70 | 138.58 | 6.37 | 119.50 | 155.60 |
| [illegible]115A | 126.34 | 163.50 | 125.77 | 10.19 | [illegible] | [illegible] |
| [illegible]119A | 112.60 | 89.80 | 110.04 | 0.80 | [illegible] | [illegible] |
| [illegible]221A | 126.77 | 90.20 | 124.29 | 1.79 | [illegible] | [illegible] |
| [illegible]226A | 60.70 | 88.70 | 56.62 | 4.10 | [illegible] | [illegible] |
| [illegible]206A | 64.60 | 98.30 | 61.43 | 3.96 | [illegible] | [illegible] |
| [illegible]136A | 42.25 | 79.20 | 41.05 | 0.29 | [illegible] | [illegible] |
| [illegible]137A | 38.25 | 79.20 | 33.43 | 7.10 | [illegible] | [illegible] |
| [illegible]210A | 72.70 | 51.70 | 72.50 | 7.27 | [illegible] | [illegible] |
| [illegible]206A | 90.90 | 85.20 | 92.01 | 14.96 | [illegible] | [illegible] |
| [illegible]175A | 58.50 | 73.90 | 59.58 | 2.59 | [illegible] | [illegible] |
| [illegible]178A | 26.91 | 19.00 | 25.31 | 2.39 | [illegible] | [illegible] |
| [illegible]186A | 217.20 | ~~120.70~~ 193.9 | [illegible] | [illegible] | [illegible] | [illegible] |
| [illegible]189A | 217.20 | ~~120.70~~ * | [illegible] | [illegible] | [illegible] | [illegible] |
| 1[illegible]188ASUB1 | 15.72 | 15.00 | [illegible] | [illegible] | [illegible] | [illegible] |
| 1[illegible]189ASUB1 | 15.72 | 15.00 | [illegible] | [illegible] | [illegible] | [illegible] |
| 1[illegible]191A | 200.07 | ~~118.70~~ 201.8 | [illegible] | [illegible] | [illegible] | [illegible] |
| 1[illegible]192A | 219.38 | ~~118.70~~ 201.8 | [illegible] | [illegible] | [illegible] | [illegible] |
| 1[illegible]191ASUB1 | 15.52 | 15.00 | [illegible] | [illegible] | [illegible] | [illegible] |
| 1[illegible]192ASUB1 | 15.52 | 15.00 | [illegible] | [illegible] | [illegible] | [illegible] |
| 1[illegible]236A | 117.05 | 131.60 | 117.55 | 13.20 | [illegible] | [illegible] |
| 1[illegible]237A | 25.30 | 28.60 | ** NO VALUES RECORDED ** | | | |
| 1[illegible]189A | 181.75 | 110.50 | 176.27 | 21.08 | [illegible] | [illegible] |
| 1[illegible]250A | 178.75 | 111.00 | 175.03 | 23.19 | [illegible] | [illegible] |
| 15237ASUB1 | 26.93 | 28.60 | 26.53 | 7.01 | [illegible] | [illegible] |

RCC: MABPAC QUARTER: 4 DATE: 2 MAY-89 TIME: 07:42:11

BACKSHOP DWELL SUMMARY

| ITEM | AVERAGE SIMULATED BACKSHOP HOURS | STANDARD DEVIATION | SIMULATED MINIMUM BACKSHOP HOURS | SIMULATED MAXIMUM BACKSHOP HOURS | NUMBER OF SAMPLES |
|---|---|---|---|---|---|
| 15113A | 192.00 | 0.00 | 192.00 | 192.00 | 36 |
| 15025A | 151.70 | 12.37 | 144.00 | 192.00 | 21 |
| 15119A | 96.00 | 0.00 | 96.00 | 96.00 | 8 |
| 15321A | 96.00 | 0.00 | 96.00 | 96.00 | 65 |
| 15136A | 96.00 | 0.00 | 96.00 | 96.00 | 66 |
| 15300A | 96.00 | 0.00 | 96.00 | 96.00 | 67 |
| 15156A | 168.00 | 0.00 | 168.00 | 168.00 | 74 |
| 15137A | 168.00 | 0.00 | 168.00 | 168.00 | 69 |
| 15140A | 96.00 | 0.00 | 96.00 | 96.00 | 70 |
| 15150A | 147.24 | 16.45 | 120.00 | 192.00 | 17 |
| 15175A | 145.00 | 0.00 | 145.00 | 145.00 | 2 |
| 15179A | 192.00 | 0.00 | 192.00 | 192.00 | 54 |
| 15165A | 168.00 | 0.00 | 168.00 | 168.00 | 50 |
| 15199A | 165.00 | 8.01 | 144.00 | 168.00 | 50 |
| 15178ASUB1 | 96.00 | 0.00 | 96.00 | 96.00 | 51 |
| 15179ASUB1 | 96.00 | 0.00 | 96.00 | 96.00 | 69 |
| 15121A | 170.00 | 14.97 | 120.00 | 192.00 | 49 |
| 15192A | 163.76 | 9.29 | 144.00 | 168.00 | 50 |
| 15151ASUB1 | 120.00 | 0.00 | 120.00 | 120.00 | 51 |
| 15192ASUB1 | 120.00 | 0.00 | 120.00 | 120.00 | 38 |
| 15236A | 271.06 | 11.10 | 264.00 | 288.00 | 34 |
| 15237A | ** NO VALUES RECORDED ** | | | | |
| 15149A | 120.00 | 0.00 | 120.00 | 120.00 | 66 |
| 15250A | 120.00 | 0.00 | 120.00 | 120.00 | 67 |
| 15237ASUB1 | 48.00 | 0.00 | 48.00 | 48.00 | 34 |

A.C: OC RCC: MABPAB QUARTER: 4 DATE: 23-MAY-89 TIME: 07:42:11 REPT.ID: VALIDATE PAGE:

PROCESS TIMES SUMMARY

| ITEM | HISTOR. FLOW HOURS | SIMULATED FLOW HOURS | WAITING FOR RESOURCES HOURS | % | PROCESSING FLOW HOURS | % | MACKSHOP HOURS | % |
|---|---|---|---|---|---|---|---|---|
| 15113A | 864.0 | 698.5 | 157.7 | 22.6% | 348.9 | 49.9% | 192.0 | 27.5% |
| 15025A | 864.0 | 685.3 | 257.2 | 37.5% | 276.4 | 40.3% | 151.7 | [illegible] |
| 15119A | 792.0 | 528.4 | 91.6 | 17.3% | 340.8 | 64.5% | 96.0 | 18.[illegible] |
| 15321A | 792.0 | 525.1 | 85.7 | 16.3% | 343.4 | 65.4% | 96.[illegible] | 18.[illegible] |
| 15126A | 792.0 | 322.0 | 44.1 | 13.7% | 181.9 | 56.5% | 96.0 | 29.8% |
| 15300A | 792.0 | 335.7 | 51.3 | 15.3% | 188.4 | 56.1% | 96.0 | 28.6% |
| 15136A | 816.0 | 454.6 | 54.7 | 12.0% | 231.6 | 51.0% | 168.[illegible] | 37.0% |
| 15137A | 816.0 | 421.9 | 55.0 | 13.0% | 198.9 | 47.1% | 168.0 | 39.8% |
| 15140A | 504.0 | 675.8 | 248.5 | 36.8% | 331.3 | 49.0% | 96.0 | 14.2% |
| 15150A | 744.0 | 737.6 | 160.9 | 21.8% | 429.5 | 58.[illegible] | 147.[illegible] | 20.0% |
| 15175A | 912.0 | 626.2 | 150.3 | 24.0% | 330.9 | 52.8% | 145.4 | 23.2% |
| 15178A | 456.0 | 376.3 | 17.7 | 4.7% | 165.6 | 44.3% | 192.0 | 51.0% |
| 15188A | 840.0 | 962.3 | 139.4 | 14.5% | 654.9 | 68.1% | 168.0 | 17.5% |
| 15189A | 840.0 | 1016.9 | 135.2 | 13.3% | 716.6 | 70.5% | 163.[illegible] | 16.2% |
| 15188ASUB1 | 0.0 | 243.5 | 24.4 | 10.0% | 123.[illegible] | 50.[illegible] | 96.0 | 39.4% |
| 15189ASUB1 | 0.0 | 255.4 | 35.7 | 14.0% | 123.6 | 48.[illegible] | 96.0 | 37.6% |
| 15191A | 864.0 | 953.7 | 148.3 | 15.6% | 635.[illegible] | 66.6% | 170.[illegible] | 17.9% |
| 15192A | 892.0 | 1025.6 | 170.7 | 16.6% | 691.[illegible] | 67.[illegible] | 163.[illegible] | 16.0% |
| 15191ASUB1 | 0.0 | 249.0 | 33.2 | 13.3% | 95.8 | 38.5% | 120.[illegible] | 48.2% |
| 15192ASUB1 | 0.0 | 260.3 | 37.8 | 14.5% | 102.[illegible] | [illegible] | 120.0 | 46.1% |
| 15236A | 1056.0 | 710.7 | 68.2 | 9.6% | 371.[illegible] | 52.3% | 271.[illegible] | 38.1% |
| 15237A | | ** NO VALUES RECORDED ** | | | | | | |
| 15249A | 984.0 | 843.2 | 82.3 | 9.8% | 640.9 | 76.0% | 120.0 | 14.2% |
| 15250A | 984.0 | 863.0 | 86.1 | 10.0% | 656.9 | 76.1% | 120.0 | 13.9% |
| 15237ASUB1 | 0.0 | 222.1 | 21.6 | 9.7% | 152.5 | 68.7% | 48.0 | 21.6% |

MAY 23 '89 7:04 MUMSL C-17MSH ASL P02

ALC: OC RCC: MABPAB QUARTER: 4 DATE: 22-MAY-89 TIME: 16:09:43 REPT.ID: VALIDATI PAL 2

ITEM INDUCTIONS

| | 1ST QTR | 2ND QTR | 3RD QTR | 4TH QTR | YTD | |
|---|---|---|---|---|---|---|
| INDUCTIONS OF ITEM [redacted] | 60 | 60 | 53 | 70 | 243 | (MISTR) |
| INDUCTIONS OF ITEM 15025A | 56 | 55 | 54 | 75 | 240 | (MISTR) |
| INDUCTIONS [redacted] | 13 | [redacted] | 20 | 20 | 69 | (MISTR) |
| INDUCTIONS OF ITEM 15321A | 13 | 16 | 20 | 20 | 69 | (MISTR) |
| [redacted] | [redacted] | [redacted] | 20 | [redacted] | 69 | (MISTR) |
| INDUCTIONS OF ITEM 15300A | 13 | 16 | 20 | 20 | 69 | (MISTR) |
| [redacted] | [redacted] | [redacted] | 23 | 22 | 76 | (MISTR) |
| INDUCTIONS OF ITEM 15137A | 13 | 16 | 23 | 21 | 73 | (MISTR) |
| INDUCTIONS OF [redacted] | [redacted] | 0 | 4 | 40 | 45 | (MISTR) |
| INDUCTIONS OF ITEM 15150A | 25 | 25 | 38 | 66 | 154 | (MISTR) |
| INDUCTIONS OF [redacted] | 25 | 12 | 8 | 26 | 71 | (MISTR) |
| INDUCTIONS OF ITEM 15178A | 36 | 50 | 59 | 75 | 220 | (MISTR) |
| INDUCTIONS OF [redacted] | 13 | 13 | 15 | 17 | 58 | (MISTR) |
| INDUCTIONS OF ITEM 15189A | 13 | 15 | 15 | 17 | 60 | (MISTR) |
| INDUCTIONS OF [redacted] | 13 | 13 | 15 | 17 | 58 | (MISTR) |
| INDUCTIONS OF ITEM 15189ASUB1 | 13 | 15 | 15 | 17 | 60 | (MISTR) |
| INDUCTIONS OF ITEM [redacted] | 11 | 11 | 16 | 17 | 55 | (MISTR) |
| INDUCTIONS OF ITEM 15192A | 6 | 6 | 10 | 17 | 39 | (MISTR) |
| INDUCTIONS OF [redacted] | 11 | 11 | 16 | 17 | 55 | (MISTR) |
| INDUCTIONS OF ITEM 15192ASUB1 | 6 | 6 | 10 | 17 | 39 | (MISTR) |
| INDUCTIONS OF [redacted] | 6 | 10 | 9 | 9 | 34 | (MISTR) |
| INDUCTIONS OF ITEM 15237A | 0 | 0 | 0 | 0 | 0 | (MISTR) |
| INDUCTIONS OF ITEM [redacted] | 13 | 18 | 23 | 20 | 74 | (MISTR) |
| INDUCTIONS OF ITEM 15250A | 13 | 19 | 23 | 20 | 74 | (MISTR) |
| INDUCTIONS [redacted] | [redacted] | 10 | 9 | 9 | 34 | (MISTR) |
| TOTAL ITEM INDUCTIONS | 405 | 446 | 518 | 669 | 2038 | |

ORIGINAL MANPOWER FACTORS

ALC: DC RCC: HABRAB QUARTER: [illegible] DATE: 22-MAY-89 TIME: 16:09:43 REPT ID: VALIDATI PAGE: 4

FLOW CYCLE TIME STATISTICS

| ITEM | HISTORICAL FLOWTIME | AVERAGE SIMULATED FLOW TIME | STANDARD | SIMULATED MINIMUM FLOW TIME HOURS | SIMULATED MAXIMUM FLOW TIME HOURS | NUMBER OF SAMPLES |
|---|---|---|---|---|---|---|
| 15113A | 864.00 | 1324.71 | 94.56 | 1013.80 | 1517.60 | 196 |
| 15025A | [illegible] | [illegible] | 139.94 | 987.40 | 1730.96 | 182 |
| 15119A | 792.00 | 469.73 | 85.59 | 362.16 | 725.[illegible] | [illegible] |
| 15321A | [illegible] | [illegible] | 27.05 | 365.42 | 679.16 | 68 |
| 15175A | 792.00 | 306.33 | 35.83 | 243.30 | 412.70 | 66 |
| 15300A | [illegible] | [illegible] | 31.43 | 247.62 | 412.42 | 6[illegible] |
| 15134A | 816.00 | 441.79 | 61.88 | 364.1[illegible] | [illegible] | [illegible] |
| 15137A | [illegible] | [illegible] | 52.00 | 319.80 | 555.20 | [illegible] |
| 15140A | 504.00 | 638.55 | 243.67 | 319.3[illegible] | [illegible] | [illegible] |
| 15150A | [illegible] | [illegible] | 124.19 | 389.10 | 985.40 | 157 |
| 15175A | 912.00 | 544.30 | 142.57 | 365.06 | [illegible] | [illegible] |
| 15178A | [illegible] | [illegible] | 28.88 | 315.66 | [illegible] | [illegible] |
| [illegible] | 840.00 | 797.79 | 103.07 | [illegible] | [illegible] | [illegible] |
| [illegible] | [illegible] | [illegible] | 105.60 | 650.00 | 1019.[illegible] | [illegible] |
| [illegible] | 0.00 | [illegible] | [illegible] | 170.94 | [illegible] | [illegible] |
| [illegible] | [illegible] | [illegible] | 42.95 | 170.50 | [illegible] | [illegible] |
| [illegible] | 864.00 | 50[illegible].49 | [illegible] | [illegible] | [illegible] | [illegible] |
| [illegible] | [illegible] | [illegible] | [illegible] | 630.07 | [illegible] | [illegible] |
| [illegible] | 0.00 | [illegible] | [illegible] | [illegible] | [illegible] | [illegible] |
| [illegible] | [illegible] | [illegible] | 39.54 | 171.02 | [illegible] | [illegible] |
| [illegible] | 1056.00 | 693.93 | 60.1[illegible] | [illegible] | [illegible] | [illegible] |
| [illegible] | [illegible] | ** NO VALUES RECORDED ** | | | | |
| [illegible] | 984.00 | 722.40 | 9[illegible].95 | [illegible] | [illegible] | [illegible] |
| [illegible] | 984.00 | 719.30 | 102.25 | 559.5[illegible] | [illegible] | [illegible] |
| [illegible] | 0.00 | 719.32 | 30.[illegible] | [illegible] | [illegible] | [illegible] |

DIRECT LABOR STATISTICS

| ITEM | EXPECTED | STANDARD | SIMULATED AVERAGE LABOR HOURS | STANDARD DEVIATION | SIMULATED MINIMUM LABOR HOURS | SIMULATED MAXIMUM LABOR HOURS | NUMBER OF SAMPLES |
|---|---|---|---|---|---|---|---|
| [illegible] | | | | | | | |
| 15113A | 139.54 | 147.70 | 135.63 | [illegible] | [illegible] | 155.20 | |
| 15025A | [illegible] | 163.50 | 124.75 | 10.67 | 93.80 | 153.30 | |
| 15119A | 112.60 | 89.80 | [illegible] | 6.70 | 107.80 | 110.80 | |
| 15321A | [illegible] | [illegible] | 124.56 | 1.84 | 118.90 | 131.40 | |
| 15126A | 60.70 | 88.70 | [illegible] | [illegible] | [illegible] | [illegible] | |
| 15300A | [illegible] | [illegible] | 60.99 | 4.39 | 51.50 | 68.30 | |
| 15136A | 42.25 | 79.10 | [illegible] | [illegible] | [illegible] | [illegible] | |
| 15137A | [illegible] | [illegible] | 38.98 | 7.56 | 23.50 | 51.50 | |
| 15140A | 72.70 | 51.70 | [illegible] | [illegible] | [illegible] | [illegible] | |
| 15150A | [illegible] | [illegible] | 89.02 | 19.71 | 49.10 | [illegible] | |
| 15175A | 58.50 | 73.90 | [illegible] | [illegible] | [illegible] | [illegible] | |
| [illegible] | [illegible] | [illegible] | 25.67 | 2.14 | 18.90 | [illegible] | |
| [illegible] | 217.20 | 120.70 | [illegible] | [illegible] | [illegible] | [illegible] | |
| [illegible] | [illegible] | [illegible] | 218.62 | 39.90 | 116.00 | [illegible] | |
| [illegible] | 15.72 | 15.00 | [illegible] | [illegible] | [illegible] | [illegible] | |
| [illegible] | [illegible] | [illegible] | 29.25 | 13.57 | [illegible] | 57.40 | |
| [illegible] | 200.07 | 118.70 | [illegible] | [illegible] | [illegible] | [illegible] | |
| [illegible] | [illegible] | [illegible] | [illegible] | 45.75 | 139.50 | [illegible] | |
| [illegible] | 15.52 | 15.00 | [illegible] | [illegible] | [illegible] | [illegible] | |
| [illegible] | [illegible] | [illegible] | 23.31 | 13.74 | 9.90 | 54.90 | |
| [illegible] | 117.35 | 121.60 | [illegible] | [illegible] | [illegible] | [illegible] | |
| [illegible] | [illegible] | [illegible] | ** ONE VALUES RECORDED ** | | | | |
| [illegible] | 181.75 | 110.50 | [illegible] | [illegible] | [illegible] | [illegible] | |
| [illegible] | [illegible] | [illegible] | 176.23 | 24.53 | 128.60 | 220.40 | |
| [illegible] | 26.93 | 28.60 | [illegible] | [illegible] | [illegible] | [illegible] | |

MAY 25 89 1:12 MOMSL C-ITMSH HSL P05

ALC: OC ACC: MABPAB QUARTER: 4 DATE: 22-MAY- TIME: 16:09:43 REPT.ID: VALIDATI PA . 6

BACKSHOP DWELL SUMMARY

| ITEM | AVERAGE SIMULATED BACKSHOP HOURS | STANDARD DEVIATION | SIMULATED MINIMUM BACKSHOP HOURS | SIMULATED MAXIMUM BACKSHOP HOURS | NUMBER OF SAMPLES |
|---|---|---|---|---|---|
| [illegible] | [illegible] | [illegible] | [illegible] | [illegible] | [illegible] |
| 15113A | 192.00 | 0.00 | 192.00 | 192.00 | 195 |
| 15025A | [illegible] | [illegible] | [illegible] | [illegible] | 182 |
| 15119A | 96.00 | 0.00 | 96.00 | 96.00 | 67 |
| 15321A | [illegible] | 0.00 | 96.00 | 96.00 | 63 |
| 15126A | 96.00 | 0.00 | 96.00 | 96.00 | 65 |
| 15300A | 96.00 | 0.00 | 96.00 | 96.00 | 67 |
| 15136A | 168.00 | 0.00 | 168.00 | 168.00 | 75 |
| 15137A | 168.00 | 0.00 | 168.00 | 168.00 | 70 |
| 15140A | 96.00 | 0.00 | 96.00 | [illegible] | [illegible] |
| 15150A | 151.71 | 15.66 | 120.00 | 168.00 | 157 |
| 15175A | 145.00 | 0.00 | 145.00 | 145.00 | 65 |
| 15178A | 192.00 | 0.00 | 192.00 | 192.00 | 213 |
| 15185A | 168.00 | 0.00 | 168.00 | 168.00 | [illegible] |
| 15184A | [illegible] | [illegible] | 120.00 | 168.00 | 56 |
| [illegible] | 96.00 | 0.00 | 96.00 | [illegible] | [illegible] |
| [illegible] | [illegible] | 0.00 | 96.00 | 96.00 | 59 |
| [illegible] | 171.59 | 16.25 | [illegible] | [illegible] | [illegible] |
| [illegible] | [illegible] | [illegible] | 144.00 | 168.00 | 38 |
| [illegible] | 120.00 | 0.00 | 120.00 | 120.00 | [illegible] |
| [illegible] | [illegible] | [illegible] | 120.00 | 120.00 | 38 |
| [illegible] | 272.47 | 13.06 | 264.00 | 312.00 | 34 |
| [illegible] | [illegible] | [illegible] | [illegible] | [illegible] | [illegible] |
| [illegible] | 120.00 | 0.00 | 120.00 | 120.00 | [illegible] |
| 15250A | [illegible] | [illegible] | 120.00 | 120.00 | 68 |
| [illegible] | 48.00 | 0.00 | 48.00 | 48.00 | 34 |

PROCESS TIMES SUMMARY

| ITEM | HISTOR. FLOW HOURS | SIMULATED FLOW HOURS | WAITING FOR RESOURCES HOURS | % | PROCESSING FLOW HOURS | % | BACKSHOP HOURS | % |
|---|---|---|---|---|---|---|---|---|
| 15113A | [illegible] | [illegible] | 210.7 | 53.6% | 422.1 | 31.9% | 192.0 | 14.5% |
| 15065A | 864.0 | 1387.0 | 909.4 | 65.5% | 328.2 | 23.7% | 150.3 | 10.8% |
| 15130A | [illegible] | [illegible] | [illegible] | 18.6% | 286.4 | 61.0% | 96.0 | 20.4% |
| 15321A | 792.0 | 458.4 | 74.3 | 16.2% | 288.1 | 62.9% | 96.0 | 20.9% |
| 15126A | [illegible] | [illegible] | 56.6 | 18.5% | 153.7 | 50.2% | 96.0 | 31.3% |
| 15300A | 792.0 | 317.4 | 61.9 | 19.2% | 160.5 | 50.6% | 96.0 | 30.2% |
| 15136A | [illegible] | 441.8 | 80.9 | 18.3% | 192.9 | 43.7% | 168.0 | 38.0% |
| 15137A | 816.0 | 401.6 | 64.2 | 16.0% | 169.3 | 42.2% | 168.0 | 41.8% |
| 15140A | [illegible] | 638.5 | 316.3 | 49.5% | 226.2 | 35.4% | 96.0 | 15.0% |
| 15150A | 744.0 | 582.1 | 154.4 | 26.5% | 396.0 | 68.0% | 151.7 | 26.1% |
| 15175A | [illegible] | [illegible] | 120.2 | 23.7% | 270.1 | 49.3% | 145.0 | 26.6% |
| 15178A | 456.0 | 363.0 | 34.0 | 9.4% | 137.0 | 37.7% | 172.0 | 52.9% |
| 15168A | [illegible] | [illegible] | 151.6 | 19.0% | 477.5 | 59.9% | 168.0 | 21.1% |
| 15189A | 840.0 | 827.7 | 131.2 | 15.9% | 531.9 | 64.3% | 164.6 | 19.9% |
| 15188ASUB1 | [illegible] | 224.1 | 25.1 | 11.2% | 103.1 | 46.0% | 96.0 | 42.8% |
| 15188ASUB1 | 0.0 | 238.5 | 29.0 | 12.2% | 113.5 | 47.6% | 96.0 | 40.3% |
| 15191A | [illegible] | 801.5 | 134.0 | 16.7% | 495.9 | 61.9% | 171.6 | 21.4% |
| [illegible] | 792.0 | 864.3 | 169.9 | 19.6% | 507.4 | 58.7% | 165.3 | 19.1% |
| [illegible] SUB1 | [illegible] | 235.3 | 29.5 | 12.5% | 85.8 | 36.5% | 120.0 | 51.0% |
| [illegible] SUB1 | 0.0 | 229.0 | 28.9 | 12.6% | 80.6 | 35.2% | 120.0 | 52.4% |
| [illegible] | [illegible] | 673.9 | 98.0 | 14.1% | 323.5 | 46.6% | 272.5 | 39.3% |
| [illegible] | | ** NO VALUES RECORDED ** | | | | | | |
| 15247A | [illegible] | 722.4 | 108.0 | 15.0% | 494.4 | 68.4% | 120.0 | 16.6% |
| 15250A | 984.0 | 719.3 | 105.2 | 14.7% | 493.6 | 68.6% | 120.0 | 16.7% |
| 15237ASUB1 | 0.0 | 219.3 | 27.0 | 12.3% | 144.3 | 65.8% | 48.0 | 21.9% |

ALC: OC RCC: [redacted] QUARTER: 4 DATE: 22-M[redacted]-89 TIME: 17:17:00 REPT.ID: VALIDATI[redacted] GE[redacted]

PROCESS TIMES SUMMARY [redacted]

| ITEM | HISTOR. FLOW HOURS | SIMULATED FLOW HOURS | WAITING FOR RESOURCES HOURS | % | PROCESSING FLOW HOURS | % | BACKSHOP HOURS | % |
|---|---|---|---|---|---|---|---|---|
| 15113A | [redacted] | [redacted] | 935.4 | 56.4% | 532.2 | 32.1% | 192.0 | 11.6% |
| 15025A | 864.0 | 1828.3 | 1254.6 | 69.6% | 422.6 | 20.1% | 151.0 | 8.3% |
| 15119A | [redacted] | [redacted] | 140.8 | 23.6% | 359.0 | 60.3% | 96.0 | 16.1% |
| 15321A | 792.0 | 605.9 | 136.5 | 22.5% | 373.4 | 61.6% | 96.0 | 15.8% |
| 15126A | [redacted] | [redacted] | 78.4 | 21.4% | 191.8 | 52.4% | 96.0 | 26.2% |
| 15300A | 792.0 | 377.7 | 87.3 | 23.1% | 194.4 | 51.5% | 96.0 | 25.4% |
| 15136A | [redacted] | 530.2 | 130.6 | 24.6% | 231.7 | 43.7% | 168.0 | 31.7% |
| 15137A | 816.0 | 474.9 | 105.7 | 22.3% | 201.2 | 42.4% | 168.0 | 35.4% |
| 15140A | [redacted] | [redacted] | 246.6 | 40.4% | 297.2 | 45.0% | 96.0 | 14.5% |
| 15150A | 744.0 | 726.3 | 192.5 | 26.5% | 386.2 | 53.2% | 147.5 | 20.3% |
| 15175A | [redacted] | 663.3 | 198.2 | 29.9% | 320.1 | 48.3% | 145.0 | 21.9% |
| 15176A | 456.0 | 401.7 | 50.8 | 12.6% | 159.2 | 39.6% | 192.0 | 47.8% |
| 15188A | [redacted] | [redacted] | 195.5 | 20.0% | 614.3 | 62.8% | 168.0 | 17.2% |
| 15189A | 840.0 | 1025.5 | 155.3 | 19.6% | 666.9 | 65.0% | 163.1 | 15.9% |
| 15188ASUB1 | [redacted] | 268.1 | 32.9 | 12.3% | 139.2 | 51.9% | 96.0 | 35.8% |
| 15189ASUB1 | 0.0 | 277.3 | 40.4 | 14.6% | 140.9 | 50.8% | 96.0 | 34.5% |
| 15191A | [redacted] | [redacted] | 191.5 | 19.4% | 625.9 | 63.4% | 169.8 | 17.2% |
| 15192A | 892.0 | 1103.2 | 232.0 | 21.0% | 707.7 | 64.2% | 163.5 | 14.8% |
| 15191ASUB1 | [redacted] | [redacted] | 42.2 | 15.8% | 105.1 | 39.3% | 120.0 | 44.9% |
| 15192ASUB1 | 0.0 | 271.6 | 47.6 | 17.5% | 104.0 | 38.3% | 120.0 | 44.1% |
| 15236A | [redacted] | 767.0 | 97.1 | 12.7% | 396.0 | 51.6% | 273.9 | 35.7% |
| 15237A | | ** NO VALUES RECORDED ** | | | | | | |
| 15249A | [redacted] | 824.0 | 150.5 | 16.0% | 655.5 | 70.5% | 120.0 | 13.0% |
| 15250A | 934.0 | 942.3 | 150.5 | 16.0% | 671.8 | 71.3% | 120.0 | 12.7% |
| 15237ASUB1 | [redacted] | 246.4 | 28.4 | 11.5% | 170.0 | 69.0% | 48.0 | 19.5% |

[redacted]

WORK IN PROCESS

| ITEM | ALLOWABLE QUANTITY | AVERAGE | STD.DEV. | MINIMUM | MAXIMUM | CURRENT | AVERAGE WAITING TIME | AVERAGE QUANTITY WAITING | CURRENT QUANTITY WAITING |
|---|---|---|---|---|---|---|---|---|---|
| 15113A | 30 | 30.0 | 0.0 | 30 | 30 | 30 | 1796.1 | 51.8 | 95 |
| 15025A | [illegible] | [illegible] | [illegible] | 30 | 30 | 30 | 1709.3 | 47.5 | 103 |
| 15119A | 16 | 4.8 | 2.2 | 0 | 10 | 8 | ** NONE WAITED ** | | |
| 15321A | [illegible] | [illegible] | 2.7 | 0 | 12 | 9 | ** NONE WAITED ** | | |
| 15126A | 10 | 2.8 | 1.3 | 0 | 6 | 4 | ** NONE WAITED ** | | |
| 15300A | [illegible] | [illegible] | 1.4 | 0 | 6 | 2 | ** NONE WAITED ** | | |
| 15136A | 16 | 4.6 | 2.7 | 0 | 11 | 6 | ** NONE WAITED ** | | |
| 15137A | [illegible] | [illegible] | 2.2 | 0 | 9 | 6 | ** NONE WAITED ** | | |
| 15140A | 16 | 3.2 | 3.6 | 0 | 16 | 16 | 246.1 | 0.5 | 12 |
| 15150A | [illegible] | [illegible] | 8.3 | 2 | 34 | 34 | 109.9 | 0.3 | 8 |
| 15175A | 10 | 5.4 | 3.3 | 0 | 10 | 10 | 157.1 | 0.3 | 9 |
| 15178A | [illegible] | [illegible] | 3.5 | 1 | 14 | 14 | 246.2 | 0.9 | 9 |
| 15188A | 16 | 6.5 | 2.7 | [illegible] | 14 | 9 | ** NONE WAITED ** | | |
| 15189A | 16 | 6.9 | 1.9 | 3 | 11 | 9 | ** NONE WAITED ** | | |
| 15180ASUB1 | 50 | 1.7 | 1.3 | 0 | 7 | [illegible] | ** NONE WAITED ** | | |
| 15189ASUB1 | 50 | [illegible] | 1.1 | 0 | 5 | 2 | ** NONE WAITED ** | | |
| 15191A | 14 | 5.9 | 1.9 | [illegible] | 11 | 10 | ** NONE WAITED ** | | |
| 15192A | [illegible] | [illegible] | 3.2 | 1 | 12 | 8 | ** NONE WAITED ** | | |
| 15191ASUB1 | 50 | 1.6 | 1.1 | 0 | [illegible] | [illegible] | ** NONE WAITED ** | | |
| 15192ASUB1 | 50 | [illegible] | 1.2 | 0 | 5 | [illegible] | ** NONE WAITED ** | | |
| [illegible] | 16 | 5.0 | 1.8 | 0 | 7 | 6 | ** NONE WAITED ** | | |
| [illegible] | 10 | 0.0 | 0.0 | 0 | 0 | 0 | ** NONE WAITED ** | | |
| [illegible] | 10 | 7.3 | 2.1 | [illegible] | 10 | 10 | 242.6 | 0.6 | 4 |
| 15250A | [illegible] | [illegible] | 2.3 | 2 | 10 | 10 | 199.3 | 0.7 | 4 |
| 15237ASUB1 | 10 | 1.0 | 0.9 | 0 | 5 | 0 | ** NONE WAITED ** | | |

TYPICAL MOVEMENT OF ITEMS
START TO FINISH

BLACK - 135
RED - 352

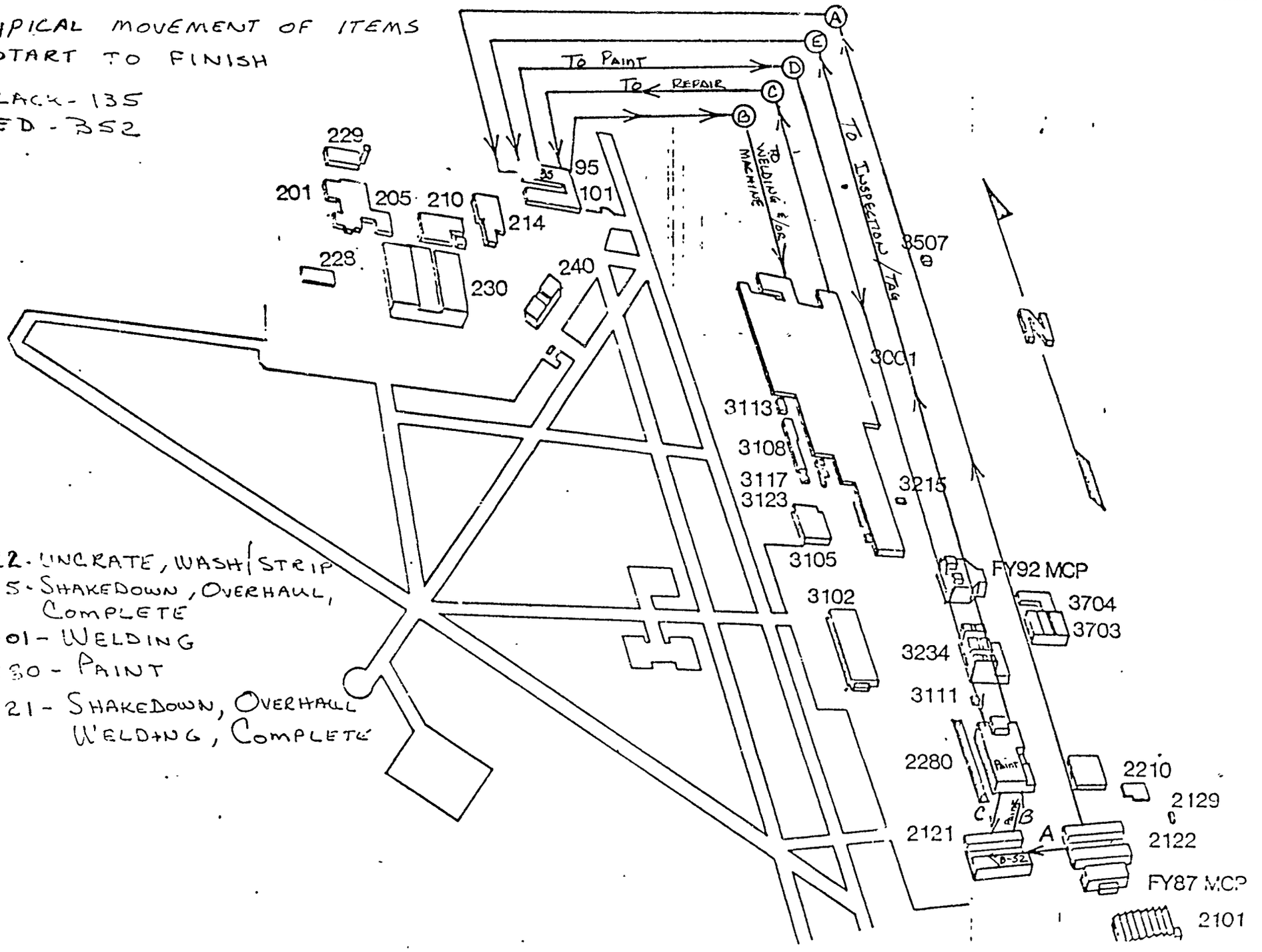


2122 - UNCRATE, WASH/STRIP
95 - SHAKEDOWN, OVERHAUL, COMPLETE
3001 - WELDING
2280 - PAINT
2121 - SHAKEDOWN, OVERHAUL WELDING, COMPLETE

## AGENDA
## RESOURCE CONTROL CENTER (RCC)
## UNIVERSAL DEPOT OPERATIONS SIMULATOR VERSION 2.0
## VALIDATION AND BRAINSTORMING SESSION

- INTRODUCTION
- RCC REVIEW
  - SCHEDULE
  - FLOW PROCESS
  - SAMPLES OF INPUT FILES AND ASSUMPTIONS
  - UDOS 2.0 SIMULATION OVERVIEW
- MODEL OBJECTIVES
- MODEL VALIDATION CRITERIA
- MODEL OUTPUT ANALYSIS
- LOAD/TRIAL RUN AT ALC (FIRST RCC ONLY)
- BRAINSTORMING SESSION (SEE APPENDIX)
- MEETING MINUTES, ACTION ITEMS & CONCLUSIONS

## MODEL OBJECTIVE

- VALIDATION WILL BE EVALUATED BY RCC AND RECOMMENDED FOR ACCEPTANCE BY RCC VALIDATION TEAM.

- THE MODEL IS AN APPROXIMATION OF THE "AS IS CONDITION" CAPTURED AT THE TIME OF INTERVIEW.

- INTENDED AS A TOOL FOR ENGINEERING ASSESSMENT OF SHOP OPERATIONS:

  - IMPROVED END ITEM THROUGHPUT.
  - IMPROVED UTILIZATION OF RESOURCES.
  - REDUCTION OF OPERATIONS COST.

  ALLOW EXPERIMENTATION OF CHANGES TO THE "AS IS" CONDITION WITHOUT CAPITOL INVESTMENT.

- THE MODEL WILL:

  - PROVIDE AN APPROXIMATATION OF REALITY.
  - ESTABLISH A BASELINE FOR EXPERIMENTATION.
  - PROVIDES A USEFUL TOOL FOR EXPLORING THE EFFECT OF CHANGE WITHOUT DISRUPTION OF OPERATION.

07 JUNE 1989
L. A. MAVROS

# UDOS 2.0

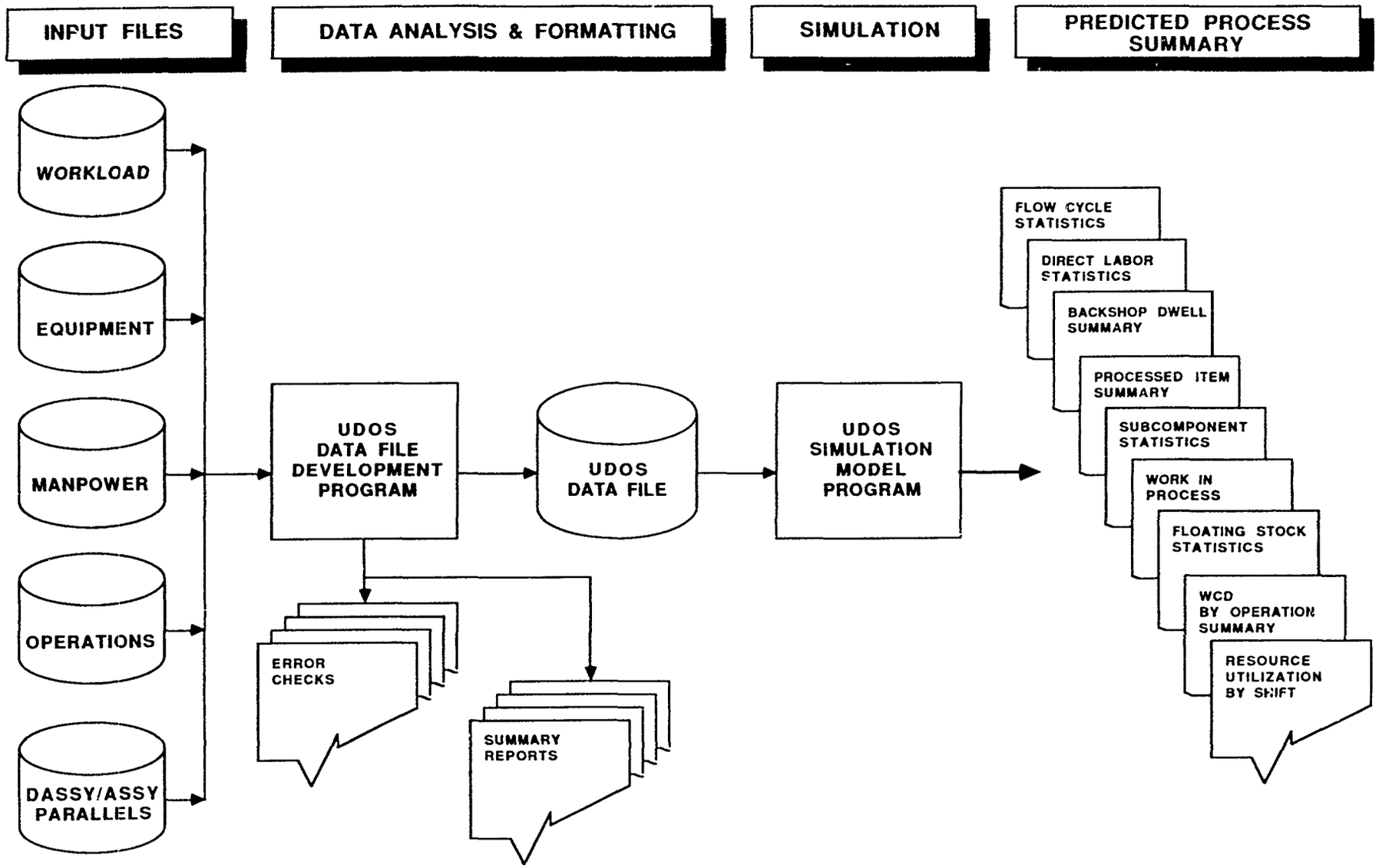
INPUT FILES
DATA ANALYSIS & FORMATTING
SIMULATION
PREDICTED PROCESS SUMMARY
WORKLOAD
EQUIPMENT
MANPOWER
OPERATIONS
DASSY/ASSY PARALLELS
UDOS DATA FILE DEVELOPMENT PROGRAM
UDOS DATA FILE
UDOS SIMULATION MODEL PROGRAM
ERROR CHECKS
SUMMARY REPORTS
FLOW CYCLE STATISTICS
DIRECT LABOR STATISTICS
BACKSHOP DWELL SUMMARY
PROCESSED ITEM SUMMARY
SUBCOMPONENT STATISTICS
WORK IN PROCESS
FLOATING STOCK STATISTICS
WCD BY OPERATION SUMMARY
RESOURCE UTILIZATION BY SHIFT

# SIMULATION MODEL

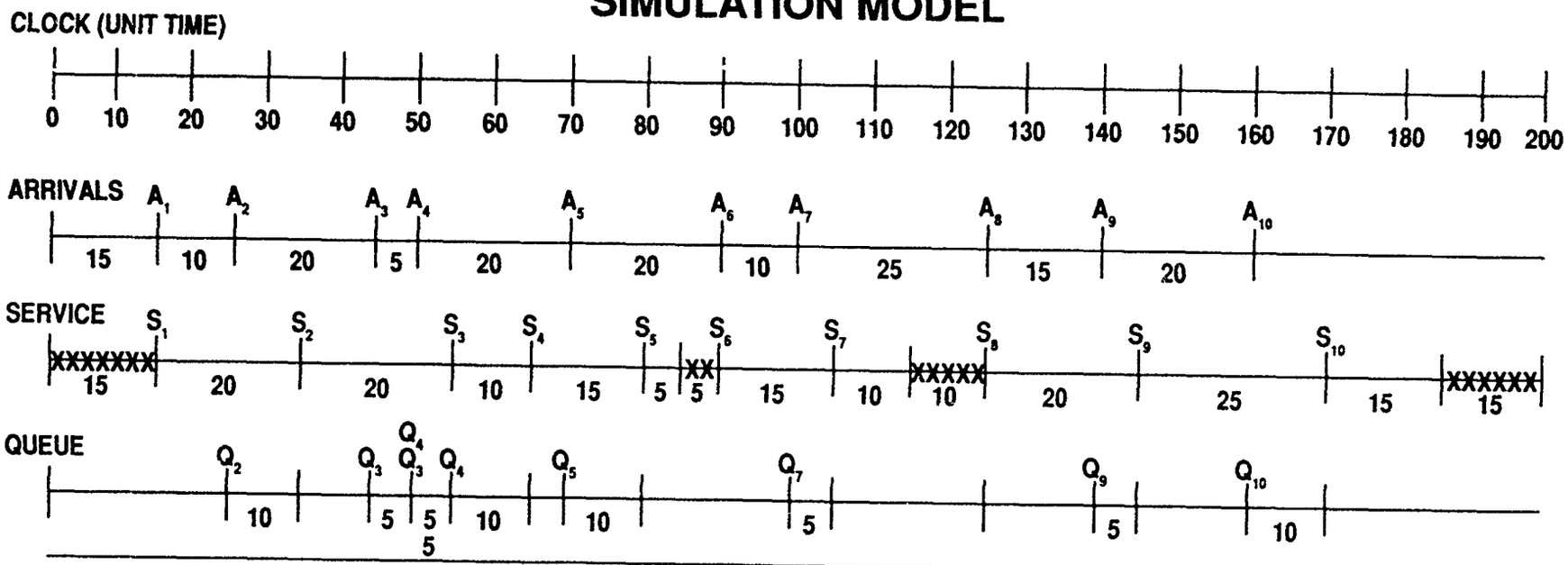


**STATISTICS:**

SERVICE 10 UNITS (THROUGHPUT)

TOTAL SERVICE TIME 155 UNIT TIMES

AVG. SERVICE TIME 15.5 UNIT TIMES

MAX. UNITS IN QUEUE 2

TOTAL IN QUEUE TIME 65 UNIT TIMES

AVG. IN QUEUE TIME 9.3 UNIT TIMES

AVG. ARRIVAL INTERVAL 16 UNIT TIMES

TOTAL IDLE TIME 45 UNIT TIMES

% UTILIZATION $\frac{155}{200} = 77.5\%$

R. BOLANOS
16 JUNE 1989

## MODEL VALIDATION CRITERIA

- SIMULATED THROUGHPUT *vs* AVAILABLE PRODUCTION DATA.
  - SCHEDULING
  - HISTORY
- SIMULATED FLOW DAYS *vs* BEST AVAILABLE RCC FLOW DAYS.
  - WCD HISTORY
  - SCHEDULING
  - SHOP FLOOR INTERVIEWS
- SIMULATED RESOURCE UTILIZATION *vs* ALC/RCC ASSESSMENT.
  - SHOP FLOOR INTERVIEWS
  - AREA MANAGER CONTROL DOCUMENTS

## THROUGHPUT VALIDATION CRITERIA

- A COMPARISON BY PART NUMBER, BETWEEN ~ SIMULATED THROUGHPUT & PRODUCTION DATA FOR A BASE YEAR.

- THE SIMULATED OUTPUT REPRESENTS A REASONABLE APPROXIMATION OF THE BASE YEAR PRODUCTION DATA USED AS A BASELINE FOR EXPERIMENTATION.

## FLOW DAYS VALIDATION CRITERIA

- A COMPARISON, BY PART NUMBER, BETWEEN ~ SIMULATED FLOW DAYS AND BEST AVAILABLE RCC FLOW DAYS, SUCH AS

  - HISTORICAL DATA
  - WORK CONTROL DOCUMENT (WCD)

- IN THE EVENT HISTORICAL DATA HAS BEEN PURGED OR IS NOT ACCURATE, THE VALIDATION TEAM WILL DETERMINE THE BEST SOURCE OF DATA THAT REPRESENTS A REASONABLE APPROXIMATION.

OKLAHOMA CITY AIR LOGISTICS CENTER
RESOURCE CONTROL CENTER MABPAB
UNIVERSAL DEPOT OPERATIONS SIMULATOR (UDOS) VERSION 2.0
VALIDATION CONFERENCE AND BRAINSTORMING SESSION
AGENDA

MONDAY 22 MAY 1989

| | |
|---|---|
| 8:45 - 9:00 | INTRODUCTION: EARL STAMPS - MABEBS |
| 9:00 - 10:00 | MABPAB OVERVIEW: RICARDO BOLANOS |
| | SCHEDULE<br>FLOW PROCESS<br>PROCESS PROFILE |
| 10:00 - 10:15 | BREAK |
| 10:15 - 10:30 | MODEL EXPECTATIONS: RICARDO BOLANOS |
| 10:30 - 12:00 | MODEL OUTPUT ANALYSIS: SCOTT VROMAN |
| 12:00 - 13:00 | LUNCH |
| 13:00 - 16:00 | MODEL VALIDATION/ADJUSTMENT RUN AT ST. LOUIS |
| 16:00 - 16:30 | ACTION PLANING |

TUESDAY 23 MAY 1989

| | |
|---|---|
| 9:00 - 18:00 | DATA OUTPUT ANALYSIS<br>& SECOND VALIDATION ADJUSTMENT RUN |

WEDENSDAY 24 MAY 1989

| | |
|---|---|
| 9:00 - 10:00 | LOAD/TRIAL RUN MABPAB UDOS 2.0 ON OC-ALC VAX |
| 10:00 - 12:00 | MODEL VALIDATION & CONCLUSIONS |

13:00 16:00 BRAINSTORMING / TAGUCHI

OC-MABPAB

5/24/89

A. Reduction on Man-Power due to 80/20 Workload is: 19.5%

B. Increase on Man-Power due to FY88 Efficiency is: 11.2%

} Man Power Profile.

C. Reduction on Interview Times due to Breaks & PFD of [redacted] 7% is: 89.13%

$$\left(8\ \text{hrs}/\text{day} - .33\ \text{min.}/\text{Two Breaks}\right) \times .93_{\text{PFD}} = 7.13$$

$$7.13/8 = .8913.$$

---

Therefore:

A & B Net Reduction on Man Power Profile Factor is 8.3%

$$\begin{array}{r} 19.5 \\ -\ 11.2 \\ \hline 8.3\% \end{array}$$

| | | | | |
|---|---|---|---|---|
| 1st QTR | 5.6 | × .917 = | 5.135 | hrs (5.14) |
| 2nd QTR | 5.7 | × .917 = | 5.23 | |
| 3rd QTR | 5.9 | × .917 = | 5.41 | |
| 4th QTR | 5.8 | × .917 = | 5.32 | |

on Week End or Holidays

$(7.13\text{hrs} \times .917) = 6.54$

C. Operation Profile Reduction on Man-Power & Equipment Times

I $(5.6 \times .805) \times 1.112 = 5.01$

II $(5.6 \times 1.112) \times .805 = 5.01$

III $5.6 \cdot [1 - (19.5 - 11.2)] = 5.135$

$$
\begin{array}{l}
\quad 5.6 \\
- \quad (5.6 \times 0.195) \\
+ \quad (5.6 \times 0.112) \\
\hline
\end{array}
$$

80/20 WL

EFF.

$(10 \times .805) \times 1.112$

$10 \times 0.917$

## 7.0 COMPUTER SIMULATION ANALYSIS OF RCC

The computer simulation analysis for RCC MABPAB was previously submitted under memo number NKE-E016-6955, dated June 5, 1989.

## 8.0 VALIDATION OF SIMULATION ANALYSIS

The validation of simulation analysis for RCC MABPAB was previously submitted under memo number NKE-E016-6955, dated June 5, 1989.

# MABPAB THROUGHPUT STATISTICAL ANALYSIS

| PART CONTROL NUMBER (PCN) | SIMULATED | FY 88 ACTUALS | % VARIANCE (SIM /ACTUALS) |
|---|---|---|---|
| 15113A | 233 | 243 | -4% |
| 15025A | 214 | 240 | -12% |
| 15119A | 65 | 69 | -6% |
| 15321A | 65 | 69 | -6% |
| 15126A | 68 | 69 | -1% |
| 15300A | 67 | 69 | -3% |
| 15136A | 73 | 76 | -4% |
| 15137A | 69 | 73 | -6% |
| 15140A | 17 | 45 | -165% |
| 15150A | 122 | 154 | -26% |
| 15175A | 69 | 71 | -3% |
| 15178A | 202 | 220 | -9% |
| 15188A | 56 | 58 | -4% |
| 15189A | 54 | 60 | -11% |
| 15191A | 47 | 55 | -17% |
| 15192A | 33 | 39 | -18% |
| 15236A | 34 | 34 | 0% |
| 15249A | 67 | 74 | -10% |
| 15250A | 65 | 74 | -14% |
| SHOP AVERAGE | 1620 | 1792 | -11% |

LSC-20454

# MABPAB FLOW HOURS STATISTICAL ANALYSIS

| (PCN) | HISTORY | SIMULATED | G-019-C | % VARIANCE (SIM /HIST) | % VARIANCE (SIM /G-019-C) |
|---|---|---|---|---|---|
| 15113A | 1,276 | 810 | 864 | -58% | -7% |
| 15025A | 1,628 | 848 | 864 | -92% | -2% |
| 15119A | 1,178 | 571 | 432 | -106% | 24% |
| 15321A | 1,015 | 562 | 456 | -81% | 19% |
| 15126A | 892 | 349 | 432 | -156% | -24% |
| 15300A | 376 | 363 | 456 | -4% | -26% |
| 15136A | 767 | 481 | 504 | -59% | -5% |
| 15137A | 441 | 452 | 504 | 2% | -12% |
| 15140A | 1,235 | 688 | 504 | -80% | 27% |
| 15150A | 1,453 | 820 | 744 | -77% | 9% |
| 15175A | 4,183 | 717 | 528 | -483% | 26% |
| 15178A | 360 | 411 | 456 | 12% | -11% |
| 15188A | 1011 | 1,059 | 840 | 5% | 21% |
| 15189A | 873 | 1,126 | 840 | 22% | 25% |
| 15191A | 1,028 | 1,050 | 864 | 2% | 18% |
| 15192A | 731 | 1,155 | 892 | 37% | 23% |
| 15236A | 1,689 | 777 | 840 | -117% | -8% |
| 15249A | 156 | 963 | 984 | 84% | -2% |
| 15250A | 833 | 953 | 984 | 13% | -3% |
| SHOP AVERAGE | 21,125 | 14,155 | 12,988 | -49% | 8% |

LSC-20455

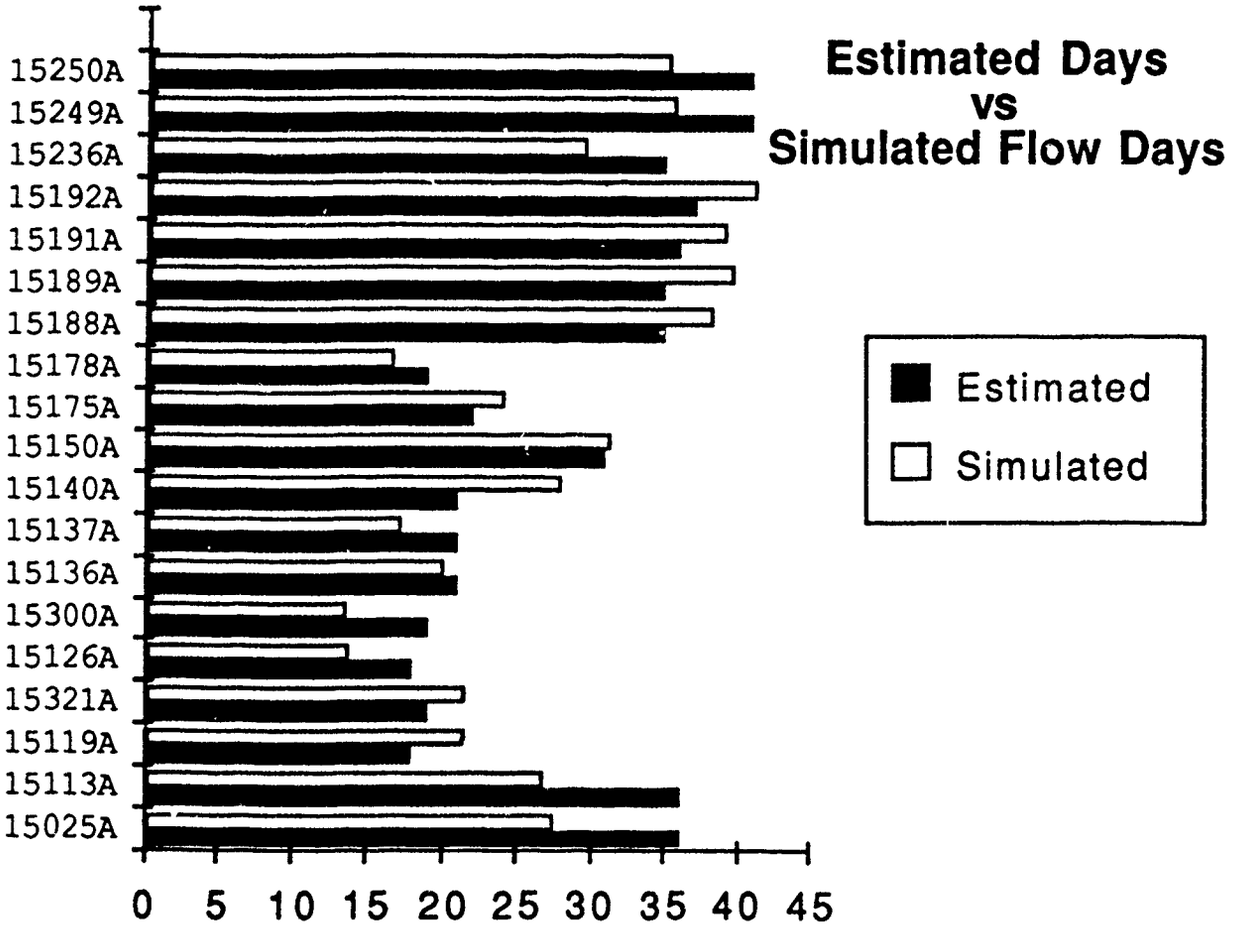
Estimated Days
vs
Simulated Flow Days
Estimated
Simulated
15250A
15249A
15236A
15192A
15191A
15189A
15188A
15178A
15175A
15150A
15140A
15137A
15136A
15300A
15126A
15321A
15119A
15113A
15025A
0 5 10 15 20 25 30 35 40 45

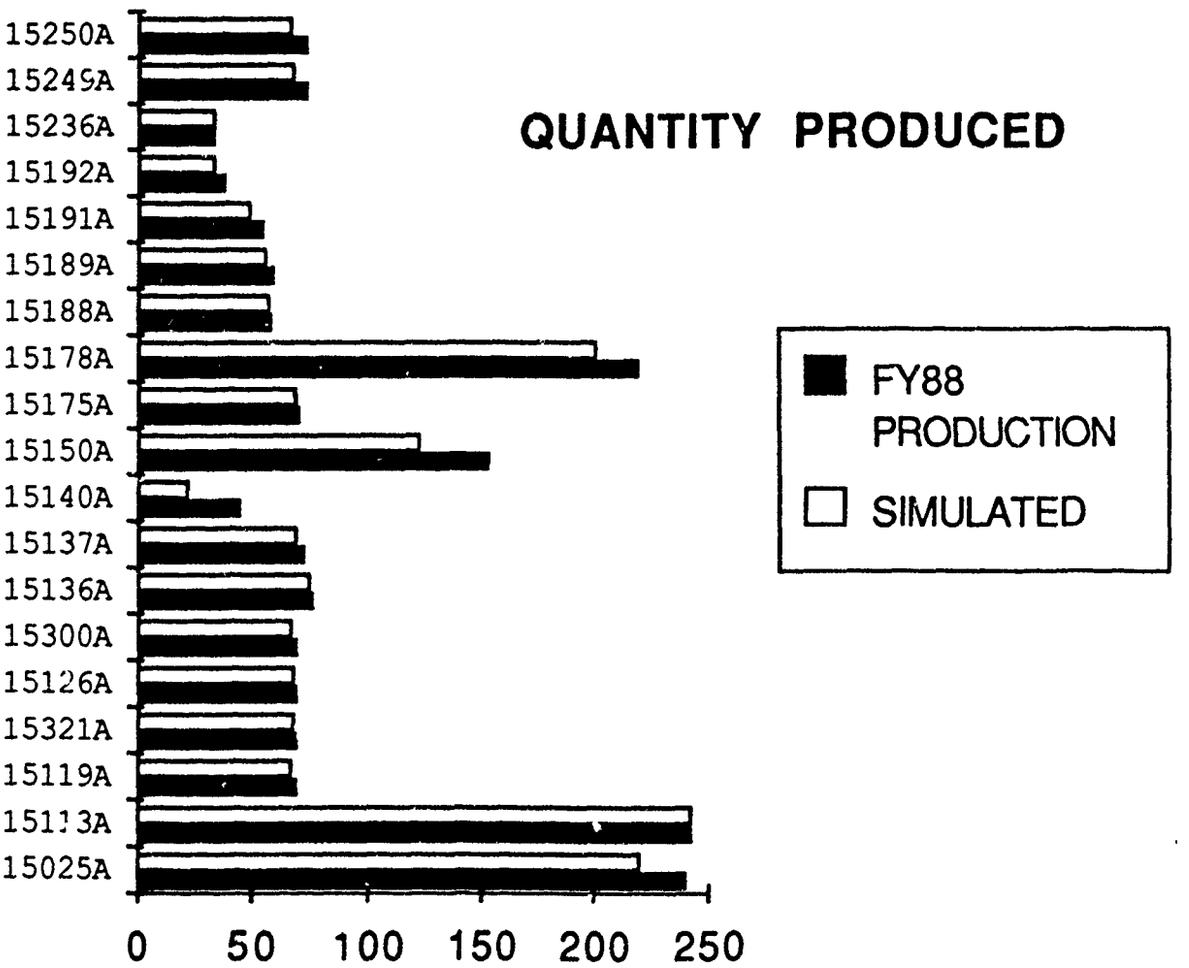
QUANTITY PRODUCED
15250A
15249A
15236A
15192A
15191A
15189A
15188A
15178A
15175A
15150A
15140A
15137A
15136A
15300A
15126A
15321A
15119A
15113A
15025A
0
50
100
150
200
250
FY88 PRODUCTION
SIMULATED

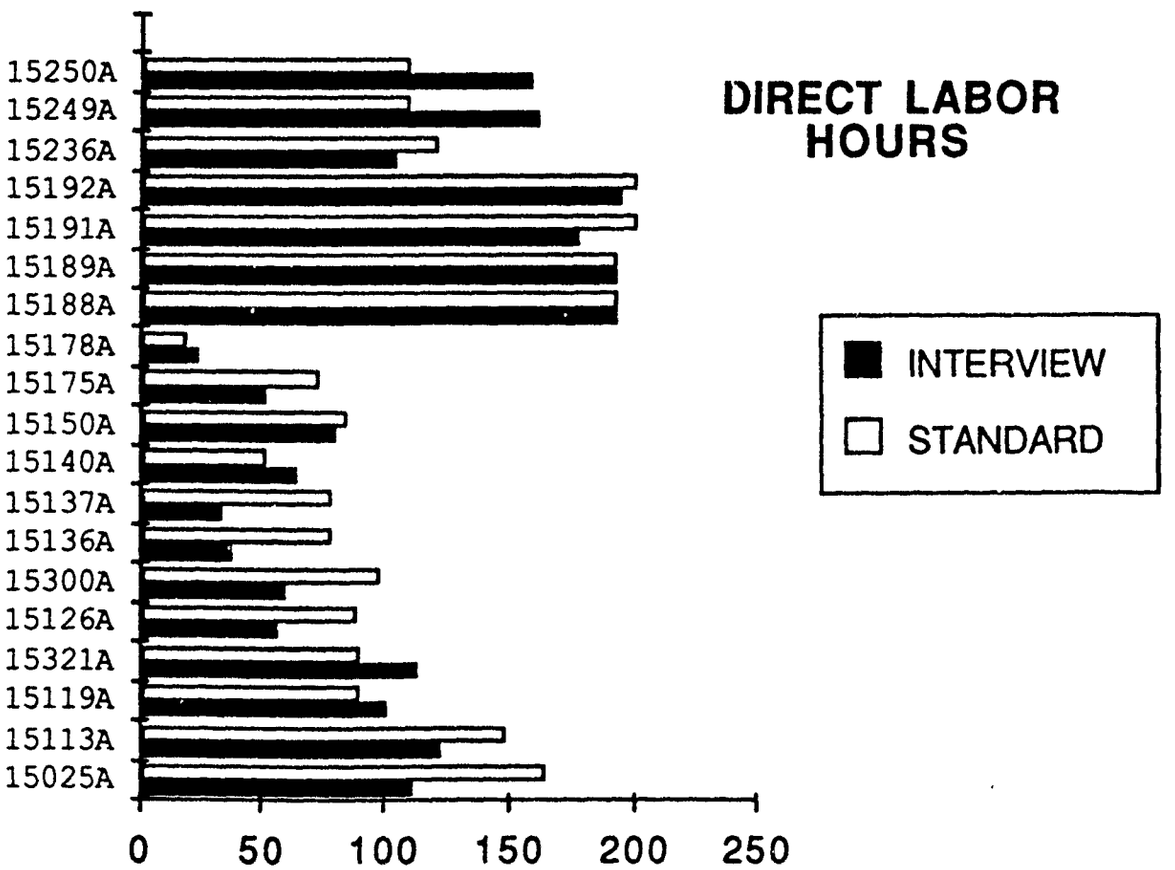
DIRECT LABOR HOURS
INTERVIEW
STANDARD
15250A
15249A
15236A
15192A
15191A
15189A
15188A
15178A
15175A
15150A
15140A
15137A
15136A
15300A
15126A
15321A
15119A
15113A
15025A
0
50
100
150
200
250

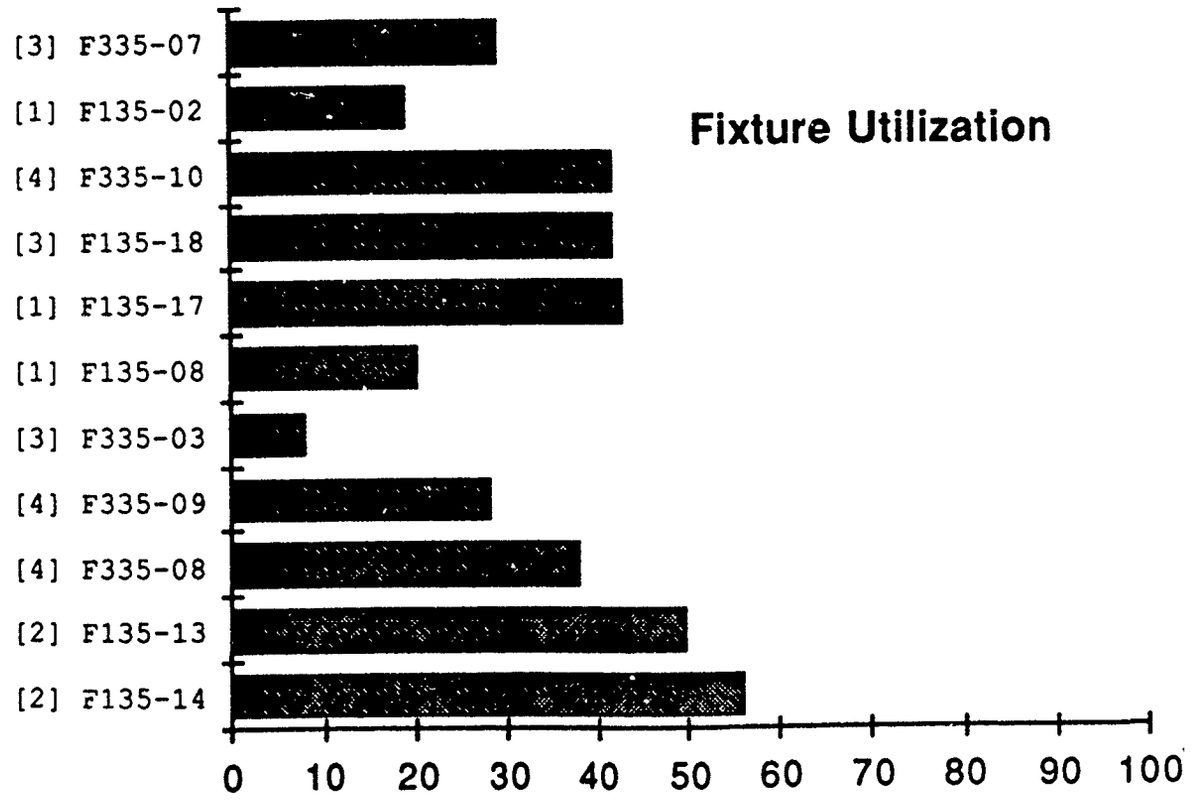
Fixture Utilization
[3] F335-07
[1] F135-02
[4] F335-10
[3] F135-18
[1] F135-17
[1] F135-08
[3] F335-03
[4] F335-09
[4] F335-08
[2] F135-13
[2] F135-14
0
10
20
30
40
50
60
70
80
90
100

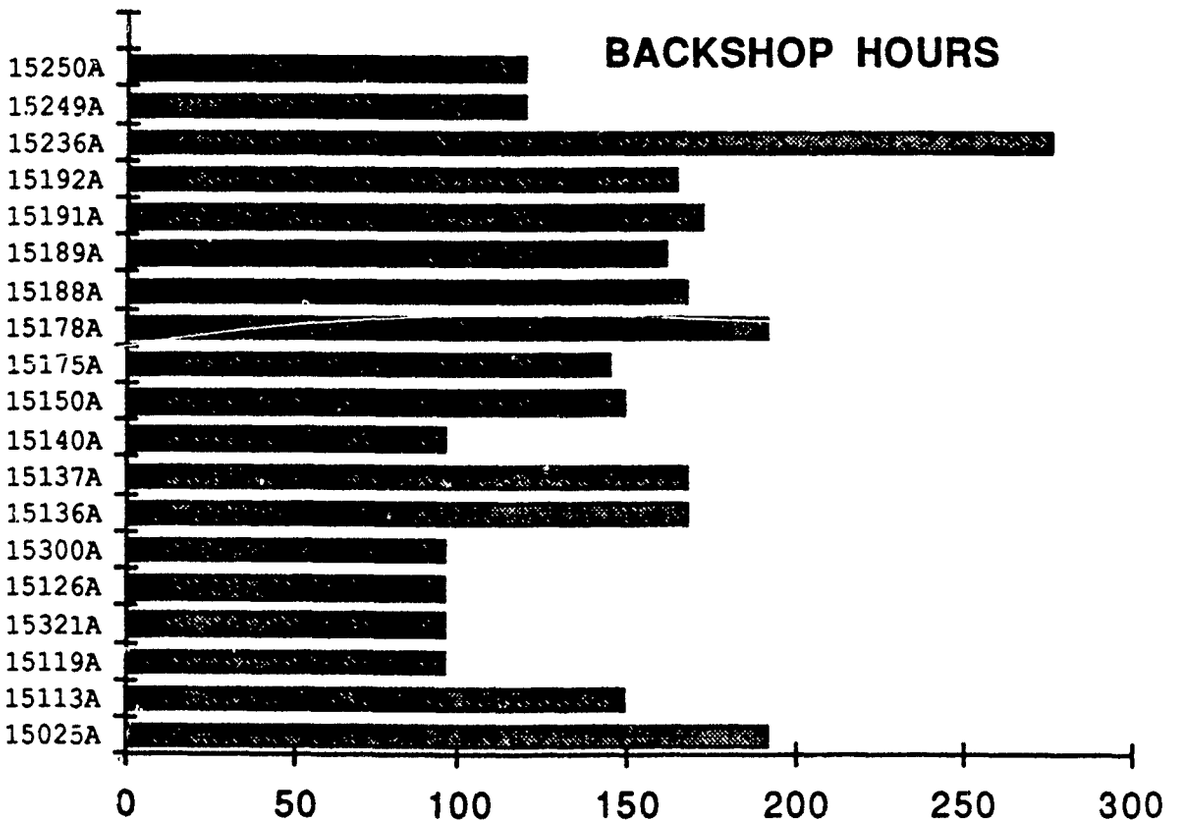
BACKSHOP HOURS
15250A
15249A
15236A
15192A
15191A
15189A
15188A
15178A
15175A
15150A
15140A
15137A
15136A
15300A
15126A
15321A
15119A
15113A
15025A
0
50
100
150
200
250
300

## 15025A PROCESSING SUMMARY

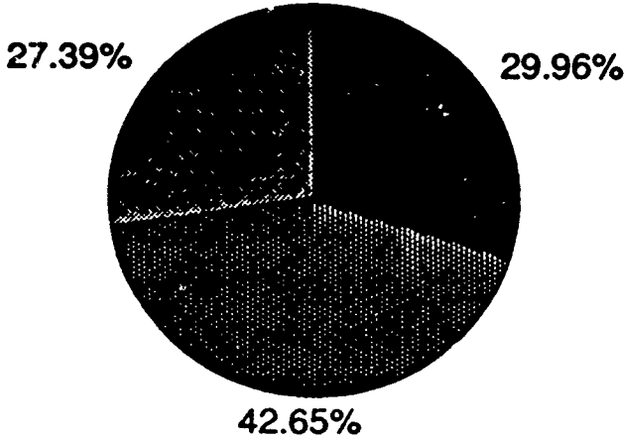


## 15113A PROCESSING SUMMARY

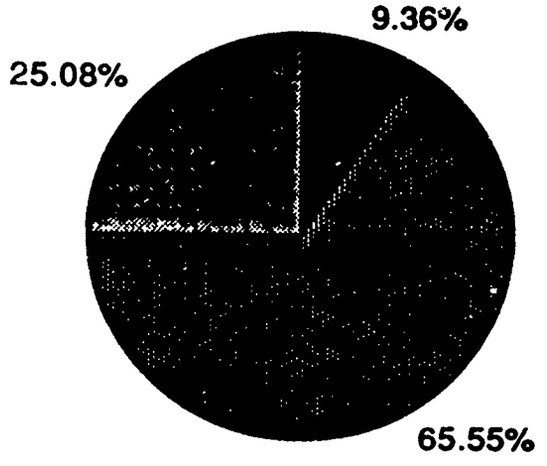


## 15150A PROCESSING SUMMARY

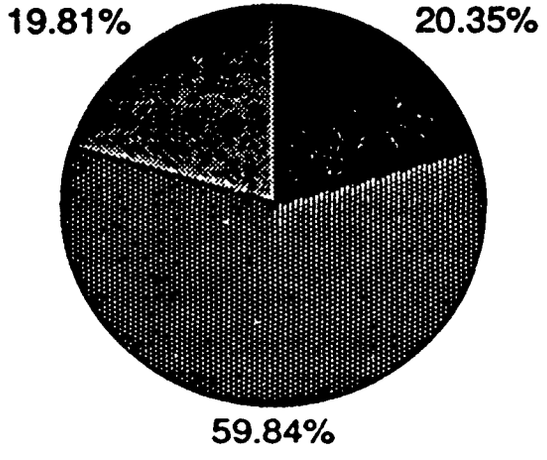


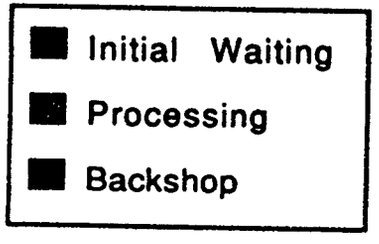

## 9.0 BRAINSTORMING

The minutes for RCC MABPAB brainstorming were previously submitted under memo number NKE-E016-6955, dated June 5, 1989.

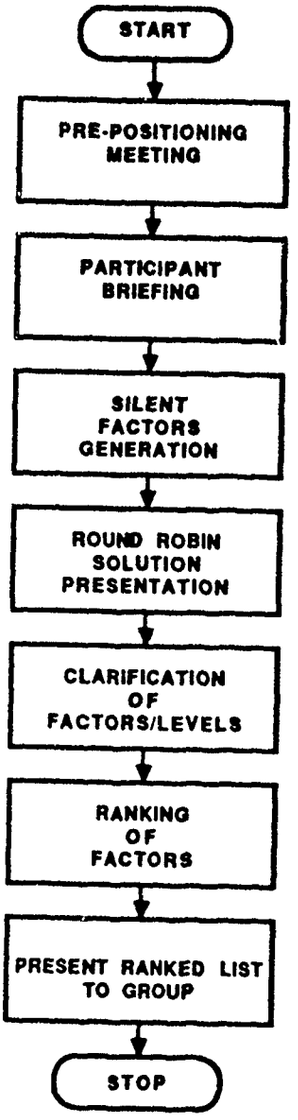


LSC-20462

## TI-ES BRAINSTORMING PROCESS

## 2.7 BRAINSTORMING SESSION

On the afternoon of Wednesday 24 May, a brainstorming session was conducted in accordance with the procedures set forth in enclosure 18. The problem addressed by this brainstorming session, the Taguchi Factors and levels identified during the session are summarized below:

| | |
|---|---|
| Problem Statement: | How to move MABPAB from its current 100,000 square foot facility into a new 60,000 square foot facility and maintain FY90 workload and surge capacity. |
| Taguchi Factors: | Manpower (Control Factor)<br>Equipment (Control Factor)<br>Workload (Noise Factor) |
| Levels: | To be determined at a later date. |

Table 2.7-1. Taguchi Factors.

| FACTORS | | METHOD OF INVESTIGATION |
|---|---|---|
| 1) | REDUCTION OF BREAK AREAS | Quick Fix (QF) |
| 2) | INCREASE MANPOWER ON 2ND SHIFT | Model (M) |
| 3) | BALANCE MANPOWER REPORTS BETWEEN 1ST & 2ND SHIFT | M |
| 4) | INCREASE NUMBER OF HIGHLY UTILIZED FIXTURES | M |
| 5) | MATERIAL CONTROL TO REDUCE QUEUES | Focus Study (FS) |
| 6) | INCREASE BACK SHOP DWELL TIME | M |
| 7) | OPTIMIZE SPACE REQUIREMENTS (COMPRESSED BARE MINIMUM) | FS |
| 8) | 3RD SHIFT POSSIBILITY | M |
| 9) | INCREASE MANPOWER AVAILABILITY BY X% | M |
| 10) | MODEL NEW FACILITY LAYOUT FOR EQUIPMENT | M |
| 11) | REDUCE WORK IN PROCESS | M |
| 12) | REDUCE DISTANCE TRAVELED INSIDE RCC | QF or FS |
| 13) | CONSOLIDATE SUPERVISOR'S OFFICES | M |
| 14) | OVERTIME | M |
| 15) | ELIMINATE EQUIPMENT & FIXTURES WITH MINIMUM UTILIZATION | M |
| 16) | DETERMINE WAR TIME SURGE CAPABILITY | M |
| 17) | INCORPORATE BACK SHOP OPERATIONS | M |
| 18) | INCREASE WORKLOAD FROM 18.1 TO 18.5 LEVEL INDUCTIONS | M |
| 19) | DECREASE WORKLOAD | M |
| 20) | CONTINUITY BETWEEN SHIFTS | M |
| 21) | ESTABLISH PICK UP CREW ON 3RD SHIFT | M |
| 22) | MOBILE TAGING UNIT | QF |
| 23) | INCORPORATE STAGING AREA | FS |
| 24) | MODEL FIXTURE FORCASTS | M |

## 3.0 LIST OF ATTENDEES

The list of attendees is provided as enclosure 1 to these meeting minutes. Those not in attendance for the entire conference and brainstorming session are so indicated.

## 4.0 CONFERENCE AGENDA

The modified agenda reflecting actual conference sequence is provided as enclosure 2 to these meeting minutes.

## 5.0 PRESENTATION MATERIALS

Presentation materials used during the MABPAB UDOS 2.0 Validation Conference are provided as enclosure 3 to these meeting minutes.

## 6.0 VALIDATION FORM

The Validation Form form signed at the conclusion of the MABPAB UDOS 2.0 Validation Conference is provided as enclosure 4 to these meeting minutes.

## 7.0 ACTION ITEMS

Action items annotated on the Validation Form referenced in paragraph 6.0 have been recorded of Action Item forms and are included as enclosure 5 of these meeting minutes.

## 8.0 MODEL INPUT/OUTPUT FILE PRINTOUTS

MABPAB UDOS 2.0 model input files and output files which resulted in validation of the model are provided as enclosures 6 through 17.

Factors

{ $H_2$ relocate MABPAB into 100 K S → 60 K S

| | | |
|---|---|---|
| 1) Reduction of break areas. | DONE | Quick Fix (F) |
| 2) Increase MP L in 2d shift | | M |
| 3) Balance MP L reports between 1st + 2d shift | | M |
| 4) Increase number of highly utilized fixtures | | M |
| 5) Material Control to reduce queues | | FS |
| 6) Increase back shop dwell time | | M |
| 7) Optimize space requirements Compressed bare minimum | | FS focal study |
| 8) 3rd Shift Possibility | | M |
| 9) Increase MP L availability by x % | | M |
| 10) Model new Facility Layout for Eqmt | | M |
| 11) Reduce work in process | | M |
| 12) Minimize distance traveled inside RCC | | GF or FS |
| 13) Consolidate Suprv's Ofcs | | M |
| 14) Overtime | | M |
| 15) Eliminate Eqmt + fixtures w/ minimum utilization | | M |
| 16) Determine War Time Surge Capability | | M |
| 17) Incorporate back shop Operations | | M |

same

18) Increase Workload 18.1 Level Inductions 18.5 Increase Inductions — M

19) Decrease Workload — M

20) Continuity between shifts — M

21) Establish Pick Up Crew on 3rd shift — M ~~M~~ ~~FS~~

22) Mobile Tightening Unit — GF

~~23) Change Quarterly Inductions~~

23) Incorporate Staging Area — FS

24) Model Future Forecasts — M

Identifying the factors

Priority (per Scott)

Similarities
2, 3, 20, 21

Continuity of shifts
Incr Util Fixtures

New Eqmt Profile → levels

Man Power → levels

Workload → levels

# of fixtures)

- Now we have the same number of manhours only distributed across different shifts -

- Need to include increased manhours such as weekends -

→ This could be the same as adding people -

- Validation -

~~24 hrs~~

One week - 7 days

40 hours

$\frac{56}{40} = 1.4$ $\frac{48}{40} = 1.2$

{1.204} 1.08



Examine People distribution by shift, staffing level and Equipment (no. of fixtures) versu FY90 and surge workload. This examination is limited to Part no. 15025A and 15133A (left and right hand side cowl) at MABPAB, Tinker AFB.

---

High Equip, High workload -
→ 60% above
Work load 1.6
- 2 shift - 7 days
14% down from over 72 hours a week ⇒ when in a surge mode -

People Ef
60 hours - 9
72 hours - 8

split people between shifts - and work overtime -
3 → 27 people
2.1 X 40 = every one works →

People - more

- Baseline
- Baseline + 60%

200 - Baseline - = Effective hours
320 - surge

- Need to have increase in workload / person
also additional people (?)



MEMO

19 June 1989
TI-89-FJL-0199

Subject: TECHNOLOGY INSERTION-ENGINEERING SERVICES (TI-ES) TASK ORDER NO. 1 PRELIMINARY EXPERIMENTATION RESULTS FOR OC-ALC (RCC MABPAB)

To: R. G. Bolanos, R. Donnelly Jr., C. J. Gonzales, B. Kirk, L. A. Mavros, M. S. McCoy, File

Encl: (1) Transmittal Letter NKE-E016-6971, dated 15 June 1989
(2) Task Order No. 1 Process Characterization, OC-ALC, RCC MABPAB Sheetmetal Backshop

1. Enclosures (1) and (2) are provided as internal distribution.

2. If you have any questions or comments, contact R. G. Bolanos at Ext. 925-5840, or the writer.

F. J. Lauber
T. I. Program Administration
E510/0922272, Sta. 925-5406

FJL:ksf

0048P/5

**MCDONNELL DOUGLAS**

*McDonnell Douglas*
*Missile Systems Company*

CORRESPONDENCE ACTION ITEM RESPONSE
☐ YES ☐ NO
L.A. MAVROS
R. DONNELLEY JR.

15 June 1989
NKE-E016-6971

Subject: Contract F33600-88-D-0567, Technology Insertion Engineering Services, Process Characterization at OC-ALC (RCC MABPAB)

To: Department of the Air Force
Attention: Ms J. Hoyt (PMRP)
Contracting Officer
Building 1, Area C
Wright Patterson Air Force Base, Ohio 45433-5320

Reference: (a) Task Order No. 1, Cure Notice MOA, dated 17 March 1989

Enclosure: (1) Task Order No. 1, Process Characterization: OC-AL RCC MABPAB - Sheetmetal Backshop

1. As required by Paragraph (1) of Reference (a), McDonnell Douglas Missile Systems Company (MDMSC) expedited process characterization of the subject RCC. Data collection, model validation, and experimentation has been completed and, accordingly, MDMSC herein submits Enclosure (1). MDMSC will include the applicable Quick Fix Plans and focus study recommendations in the Block 1 Contract Summary Report.

2. Please address any questions or requests for additional information to the undersigned at (314) 233-8724.

O.W. Engelbart
D. W. Engelbart
Senior Contracts Administrator
Advanced Programs

EC: Department of the Air Force
HQ AFLC/MAQF
Attn: Doxie Cripe
Wright Patterson AFB, OH 45433-5320

IC: G. Eisenhart
T. Lauber (Bldg. 92 Dist)
Contract Files
D. Engelbart
Master Files

AFTER FINAL SIGNATURE RETURN TO:
LETTER ✓
ENCLOSURE

CE ✓ NEXT TO LADDER SIGNATURE
APPROPRIATE BOX
IF COPY IS DESIRED

MDE 14-27-1 (REV 22 AUG 88) RAH-96/5

**MASTER FILE**

# TECHNOLOGY INSERTION ENGINEERING SERVICES
# PROCESS CHARACTERIZATION
## (TASK ORDER NO. 1)
## OC/ALC RCC MABPAB
**Sheetmetal Backshop**
**15 JUNE 1989**
**(PRELIMINARY)**

**CONTRACT NO. F33600-88-D-0567**

***MCDONNELL DOUGLAS***
*McDonnell Douglas Missile Systems Company*
*St. Louis, Missouri 63166-0516 (314) 232-0232*

**Enclosure (1)**

## OC/ALC MABPAB
## Sheetmetal Repair Shop

### Results

The expedited MABPAB experimentation required by the MOA was completed June 15, 1989 on schedule. Preliminary Taguchi results indicated that moving MABPAB from approximately a 100,000 sq. ft. to a 65,000 sq. ft. will require certain considerations if the projected FY-90 workload is to be met.

A 65,000 sq. ft. facility, one shift will produce 66.5% of the FY-90 projected workload. Addition of a second shift will increase the FY-90 thruput to approx. 94%. The addition of assembly fixtures for 15249 & 15250(outboard left hand and right hand aileron assembly) will increase the thruput for one shift from 66.5% to 78.3%. If additional assembly fixtures are added, increased floor space is required.

### Surge Requirement

Surge requirement was calculated on 1.6 of the FY-90 projected workload. It is assumed that during war time conditions 3 shifts will be used raising the thruput to 93.35%. If the additional assembly fixtures are installed the projected surge thruput will increase to 98.5%. However it should be noted that additional floor space is required.

Additional analysis of the Taguchi results will be made and if warranted a focus study will be recommended.

### MDMSC recommends the following:

- Maintain the three existing aileron assembly fixtures.
- Increase floor space to accommodate the three aileron fixtures.
- Add a second shift as required.
- Consider a stand alone sheet metal shop by the addition of paint, welding and sand blasting capabilities.

Enclosure (1)

OC/ALC MABPAB
SHEETMETAL REPAIR SHOP 6/15/89

| END-ITEM | FY90 INDUCTIONS | BASE SIMULATION | THROUGHPUT |
|---|---|---|---|
| 15188A | 0 | 0 | N/A |
| 15237A | 0 | 0 | N/A |
| 15249A | 182 | 40 | 22.0% |
| 15250A | 195 | 47 | 24.1% |
| 15119A | 170 | 65 | 38.2% |
| 15321A | 161 | 74 | 46.0% |
| 15175A | 151 | 82 | 54.3% |
| 15126A | 175 | 111 | 63.4% |
| 15300A | 184 | 117 | 63.6% |
| 15140A | 106 | 72 | 67.9% |
| 15136A | 212 | 164 | 77.4% |
| 15137A | 201 | 180 | 89.6% |
| 15113A | 134 | 124 | 92.5% |
| 15025A | 136 | 131 | 96.3% |
| 15150A | 146 | 141 | 96.6% |
| 15189A | 19 | 19 | 100.0% |
| 15236A | 23 | 23 | 100.0% |
| 15192A | 12 | 12 | 100.0% |
| 15191A | 16 | 16 | 100.0% |
| 15178A | 177 | 177 | 100.0% |
| | 2400 | 1595 | 66.5% |

40 HOUR WEEK , ONE SHIFT

OC/ALC MABPAB
SHEETMETAL REPAIR SHOP 6/15/89

| END-ITEM | FY90 INDUCTIONS | BASE #5 SIMULATION | THROUGHPU |
|---|---|---|---|
| 15188A | 0 | 0 | N/A |
| 15237A | 0 | 0 | N/A |
| 15249A | 182 | 112 | 61.5% |
| 15250A | 195 | 142 | 72.8% |
| 15113A | 134 | 129 | 96.3% |
| 15126A | 175 | 170 | 97.1% |
| 15119A | 170 | 166 | 97.6% |
| 15175A | 151 | 148 | 98.0% |
| 15025A | 136 | 134 | 98.5% |
| 15136A | 212 | 209 | 98.6% |
| 15150A | 146 | 145 | 99.3% |
| 15189A | 19 | 19 | 100.0% |
| 15236A | 23 | 23 | 100.0% |
| 15300A | 184 | 184 | 100.0% |
| 15192A | 12 | 12 | 100.0% |
| 15137A | 201 | 201 | 100.0% |
| 15321A | 161 | 161 | 100.0% |
| 15140A | 106 | 106 | 100.0% |
| 15191A | 16 | 16 | 100.0% |
| 15178A | 177 | 177 | 100.0% |
| | 2400 | 2254 | 93.9% |

2 SHIFTS, ~~5~~ 6 DAYS A WEEK

OC/ALC MABPAB
SHEETMETAL REPAIR SHOP 6/15/89

| END-ITEM | SURGE INDUCTIONS | BASE #9 SIMULATION | THROUGHPUT |
|---|---|---|---|
| 15188A | 0 | 0 | N/A |
| 15237A | 0 | 0 | N/A |
| 15249A | 297 | 173 | 58.2% |
| 15250A | 309 | 213 | 68.9% |
| 15175A | 261 | 242 | 92.7% |
| 15189A | 31 | 29 | 93.5% |
| 15236A | 47 | 44 | 93.6% |
| 15150A | 254 | 247 | 97.2% |
| 15140A | 178 | 176 | 98.9% |
| 15025A | 224 | 222 | 99.1% |
| 15136A | 358 | 355 | 99.2% |
| 15126A | 279 | 277 | 99.3% |
| 15113A | 219 | 218 | 99.5% |
| 15300A | 287 | 286 | 99.7% |
| 15137A | 327 | 326 | 99.7% |
| 15178A | 286 | 286 | 100.0% |
| 15191A | 24 | 24 | 100.0% |
| 15119A | 277 | 277 | 100.0% |
| 15321A | 249 | 249 | 100.0% |
| 15192A | 18 | 18 | 100.0% |
| | 3925 | 3662 | 93.3% |



3 SHIFTS, 7 DAYS A WEEK

OC/ALC MABPAB
SHEETMETAL REPAIR SHOP 6/15/89

| END-ITEM | SURGE INDUCTION | BASE #9 SIMULATION | THROUGHPUT |
|---|---|---|---|
| 15188A | 0 | 0 | N/A |
| 15237A | 0 | 0 | N/A |
| 15249A | 297 | 283 | 95.3%BASE ++ |
| 15250A | 309 | 309 | 100.0%BASE ++ |
| 15175A | 261 | 242 | 92.7% |
| 15189A | 31 | 29 | 93.5% |
| 15236A | 47 | 44 | 93.6% |
| 15150A | 254 | 247 | 97.2% |
| 15140A | 178 | 176 | 98.9% |
| 15025A | 224 | 222 | 99.1% |
| 15136A | 358 | 355 | 99.2% |
| 15126A | 279 | 277 | 99.3% |
| 15113A | 219 | 218 | 99.5% |
| 15300A | 287 | 286 | 99.7% |
| 15137A | 327 | 326 | 99.7% |
| 15178A | 286 | 286 | 100.0% |
| 15191A | 24 | 24 | 100.0% |
| 15119A | 277 | 277 | 100.0% |
| 15321A | 249 | 249 | 100.0% |
| 15192A | 18 | 18 | 100.0% |
| | 3925 | 3868 | 98.5% |

3 SHIFTS, 7 DAYS A WEEK PLUS ADDITIONAL AILERON FIXTURES

OC/ALC MABPAB
SHEETMETAL REPAIR SHOP 6/15/89

| END-ITEM | FY90 INDUCTION | BASE #5 SIMULATION | THROUGHPUT |
|---|---|---|---|
| 15188A | 0 | 0 | N/A |
| 15237A | 0 | 0 | N/A |
| 15249A | 182 | 116 | 63.7%BASE ++ |
| 15250A | 195 | 146 | 74.9%BASE ++ |
| 15113A | 134 | 129 | 96.3% |
| 15126A | 175 | 170 | 97.1% |
| 15119A | 170 | 166 | 97.6% |
| 15175A | 151 | 148 | 98.0% |
| 15025A | 136 | 134 | 98.5% |
| 15136A | 212 | 209 | 98.6% |
| 15150A | 146 | 145 | 99.3% |
| 15189A | 19 | 19 | 100.0% |
| 15236A | 23 | 23 | 100.0% |
| 15300A | 184 | 184 | 100.0% |
| 15192A | 12 | 12 | 100.0% |
| 15137A | 201 | 201 | 100.0% |
| 15321A | 161 | 161 | 100.0% |
| 15140A | 106 | 106 | 100.0% |
| 15191A | 16 | 16 | 100.0% |
| 15178A | 177 | 177 | 100.0% |
| | 2400 | 2262 | 94.3% |



2 SHIFTS, 5 DAYS A WEEK PLUS ADDITIONAL AILERON FIXTURES

# MABPAB TAGUCHI EXPERIMENTAL RESULTS - FY 90 SURGE

| PART CONTROL NUMBER (PCN) | FY 90 INDUCTIONS | RUN #1 | RUN #2 | RUN #3 | RUN #4 | RUN #5 | RUN #6 | RUN #7 | RUN #8 | RUN #9 |
|---|---|---|---|---|---|---|---|---|---|---|
| 15113 | 219 | 189 | 218 | 219 | 219 | 218 | 219 | 219 | 217 | 218 |
| 15025 | 224 | 150 | 208 | 213 | 224 | 222 | 222 | 222 | 222 | 222 |
| 15119 | 277 | 51 | 143 | 200 | 259 | 213 | 259 | 275 | 274 | 277 |
| 15321 | 249 | 71 | 112 | 183 | 234 | 144 | 256 | 249 | 248 | 249 |
| 15126 | 279 | 116 | 225 | 279 | 276 | 277 | 277 | 275 | 277 | 277 |
| 15300 | 287 | 112 | 234 | 287 | 288 | 286 | 286 | 287 | 286 | 286 |
| 15136 | 358 | 161 | 355 | 355 | 353 | 354 | 354 | 358 | 355 | 355 |
| 15137 | 327 | 186 | 327 | 327 | 324 | 324 | 325 | 327 | 326 | 326 |
| 15140 | 178 | 71 | 173 | 173 | 173 | 174 | 176 | 174 | 177 | 176 |
| 15150 | 254 | 185 | 229 | 226 | 231 | 243 | 243 | 240 | 245 | 247 |
| 15175 | 261 | 82 | 157 | 187 | 217 | 213 | 232 | 231 | 248 | 242 |
| 15178 | 286 | 286 | 286 | 286 | 286 | 286 | 286 | 286 | 286 | 286 |
| 15188 | 0 | 0 | 0 | 0 | 0 | 0 | 0 | 0 | 0 | 0 |
| 15189 | 31 | 30 | 29 | 30 | 30 | 29 | 29 | 29 | 29 | 29 |
| 15191 | 24 | 24 | 24 | 24 | 24 | 24 | 24 | 24 | 24 | 24 |
| 15192 | 18 | 18 | 18 | 18 | 18 | 18 | 18 | 18 | 18 | 18 |
| 15236 | 47 | 44 | 45 | 45 | 44 | 45 | 45 | 45 | 45 | 44 |
| 15249 | 297 | 27 | 56 | 91 | 121 | 116 | 143 | 147 | 283 | 173 |
| 15250 | 309 | 33 | 79 | 110 | 158 | 147 | 179 | 196 | 316 | 213 |
| THROUGHPUT | 3,925 | 1,836<br>46.8 % | 2,918<br>74.3 % | 3,253<br>82.9 % | 3,479<br>88.6 % | 3,333<br>84.9 % | 3,573<br>91.0 % | 3,602<br>91.8 % | 3,876<br>98.8 % | 3,662<br>93.3 % |

LSC-20460

# MABPAB TAGUCHI EXPERIMENTAL RESULTS - FY 90

| PART CONTROL NUMBER (PCN) | FY 90 INDUCTIONS | RUN #1 | RUN #2 | RUN #3 | RUN #4 | RUN #5 | RUN #6 | RUN #7 | RUN #8 | RUN #9 |
|---|---|---|---|---|---|---|---|---|---|---|
| 15113 | 134 | 124 | 127 | 127 | 128 | 129 | 129 | 130 | 131 | 130 |
| 15025 | 136 | 131 | 136 | 135 | 135 | 134 | 133 | 133 | 134 | 134 |
| 15119 | 170 | 65 | 128 | 172 | 168 | 166 | 167 | 166 | 171 | 171 |
| 15321 | 161 | 74 | 130 | 161 | 161 | 161 | 161 | 161 | 161 | 161 |
| 15126 | 175 | 111 | 170 | 169 | 170 | 170 | 170 | 170 | 170 | 170 |
| 15300 | 184 | 117 | 184 | 184 | 184 | 184 | 184 | 184 | 184 | 184 |
| 15136 | 212 | 164 | 209 | 208 | 211 | 209 | 210 | 208 | 211 | 211 |
| 15137 | 201 | 180 | 199 | 199 | 200 | 201 | 201 | 201 | 200 | 200 |
| 15140 | 106 | 72 | 104 | 105 | 105 | 106 | 106 | 106 | 106 | 107 |
| 15150 | 146 | 141 | 142 | 141 | 145 | 145 | 144 | 144 | 145 | 145 |
| 15175 | 151 | 82 | 135 | 144 | 145 | 148 | 149 | 146 | 149 | 150 |
| 15178 | 177 | 177 | 177 | 177 | 177 | 177 | 177 | 177 | 177 | 177 |
| 15188 | 0 | 0 | 0 | 0 | 0 | 0 | 0 | 0 | 0 | 0 |
| 15189 | 19 | 19 | 19 | 18 | 18 | 19 | 19 | 19 | 19 | 19 |
| 15191 | 16 | 16 | 16 | 16 | 16 | 16 | 16 | 16 | 16 | 16 |
| 15192 | 12 | 12 | 12 | 12 | 12 | 12 | 12 | 12 | 12 | 12 |
| 15236 | 23 | 23 | 23 | 23 | 23 | 23 | 23 | 23 | 23 | 23 |
| 15249 | 182 | 40 | 73 | 89 | 116 | 112 | 143 | 144 | 177 | 178 |
| 15250 | 195 | 47 | 90 | 111 | 146 | 142 | 183 | 179 | 198 | 198 |
| THROUGHPUT | 2,400 | 1,595<br>66.5 % | 2,074<br>86.4 % | 2,190<br>91.3 % | 2,260<br>94.2 % | 2,254<br>93.9 % | 2,327<br>97.0 % | 2,319<br>96.6 % | 2,384<br>99.3 % | 2,386<br>99.4 % |

LSC-20459

JUNE 2, 1989

WORKLOAD / EXPERIMENTATION:

ON JUNE 1ST WE HAD A TELE-CONFRENCE WITH EARL STAMPS & STAFF TO STRUCTURE THE ORTHOGONAL ARRAY FOR MODEL EXPERIMENTATION USING TAGUCHI CONCEPT.

ISSUES :
- MANPOWER DISTRIBUTION
- FY90 WORKLOAD
- FY90 SURGE.

- MAN POWER :

  NOW WE HAVE THE SAME NUMBER OF MANHOURS ONLY DISTRIBUTED ACROSS DIFFRENT SHIFT.

  NEED TO INCLUDE INCREASED MANHOURS SUCH AS WEEKENDS This could be the same as adding People.

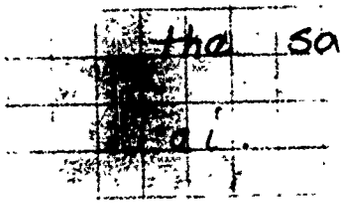

40 HOURS BASE

$48/40 = 1.2$ $56/40 = 1.4$

EFFICIENCY (90%) 1.08 1.204

- WORKLOAD DRIVES RESOURCE NEEDS
- ON SURGE CONDITION

  60 % INCREASE OR WORKLOAD FACTOR of 1.6

  2 Shift 7/DAYS 12 hours/Shift.

- HOWEVER EFFICIENCY FACTOR ARE:

  60 hours/WK → 90%

  72 hours/WK → 86%.

- SPLIT PEOPLE between Shift & WORK OVERTIME.

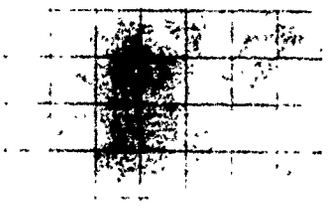

May 31/June

## Workload FY-90

| | 1st | 2d | 3r | 4th | Max WIP | |
|---|---|---|---|---|---|---|
| 15025A | 25 | 39 | 35 | 37 | 15 | |
| 15113A | 28 | 35 | 34 | 37 | 15 | |
| 15119A | 44 | 42 | 43 | 41 | 3 | 12 |
| 15321A | 43 | 38 | 41 | 39 | 3 | 12 |
| 15126A | 45 | 43 | 44 | 43 | 4 | 16 |
| 15300A | 49 | 44 | 46 | 45 | 4 | 16 |
| 15136A | 55 | 51 | 54 | 52 | 4 | 16 |
| 15137A | 52 | 49 | 50 | 50 | 4 | 16 |
| 15140A | 23 | 27 | 27 | 29 | 8 | 12 |
| 15150A | 31 | 40 | 34 | 41 | 18 | |
| 15175A | 18 | 39 | 38 | 56 | 3 | 12 |
| 15178A | 41 | 46 | 45 | 45 | 5 | 15 |
| 15188A | — | — | — | — | — | |
| 15189A | 4 | 4 | 5 | 6 | 4 | |
| 15191A | 4 | 4 | 4 | 4 | 4 | |
| 15192A | 3 | 3 | 3 | 3 | 4 | |
| 15236A | 5 | 9 | 9 | 6 | 4 | |
| 15249A | 41 | 49 | 48 | 44 | 4 | 12 |
| 15250A | 50 | 46 | 50 | 49 | 5 | 15 |

## TECHNOLOGY INSERTION

### MABPAB FY-90 WORKLOAD

| | QUARTER | | | | |
|---|---|---|---|---|---|
| END ITEM | 1st | 2nd | 3rd | 4th | MAX WIP |
| 15025A | 25 | 39 | 35 | 37 | 15 |
| 15113A | 28 | 35 | 34 | 37 | 15 |
| 15119A | 44 | 42 | 43 | 41 | 12 |
| 15321A | 43 | 38 | 41 | 39 | 12 |
| 15126A | 45 | 43 | 44 | 43 | 16 |
| 15300A | 49 | 44 | 46 | 45 | 16 |
| 15136A | 55 | 51 | 54 | 52 | 16 |
| 15137A | 52 | 49 | 50 | 50 | 16 |
| 15140A | 23 | 27 | 27 | 29 | 12 |
| 15150A | 31 | 40 | 34 | 41 | 18 |
| 15175A | 18 | 39 | 38 | 56 | 12 |
| 15178A | 41 | 46 | 45 | 45 | 15 |
| 15189A | 4 | 4 | 5 | 6 | 4 |
| 15191A | 4 | 4 | 4 | 4 | 4 |
| 15192A | 3 | 3 | 3 | 3 | 4 |
| 15236A | 5 | 9 | 9 | 6 | 4 |
| 15249A | 41 | 49 | 48 | 44 | 12 |
| 15250A | 50 | 46 | 50 | 49 | 15 |

E. STAMP
07 JUNE 1989

## MABPAB FY-90 MANPOWER

| SKILL CODE | QUANTITY QUARTER 1st | 2nd | 3rd | 4th | FACTOR QUARTER 1st | 2nd | 3rd | 4th |
|---|---|---|---|---|---|---|---|---|
| AS | 13 | 18 | 16 | 17 | 5.0 | 5.3 | 6.1 | 5.9 |
| BS | 14 | 16 | 15 | 16 | 5.0 | 5.3 | 6.1 | 5.9 |
| CS | 10 | 16 | 16 | 12 | 5.0 | 5.3 | 6.1 | 5.9 |
| DS | 7 | 9 | 8 | 8 | 5.0 | 5.3 | 6.1 | 5.9 |
| ES | 75 | 72 | 72 | 71 | 5.0 | 5.3 | 6.1 | 5.9 |
| FS | 78 | 78 | 78 | 80 | 5.0 | 5.3 | 6.1 | 5.9 |

**E. STAMP**

**07 JUNE 1989**

## MABPAB Equipment Profile (Benches)

| CODE | QUANTITY | END ITEM |
|---|---|---|
| 25 | 13 | 15025A |
| 113 | 13 | 15113A |
| 119 | 3 | 15119A/15321A |
| 126 | 3 | 15126A/15300A |
| 136 | 6 | 15136A/15137A |
| 140 | 7 | 15140A |
| 150 | 18 | 15150A |
| 175 | 3 | 15175A |
| 178 | 5 | 15178A |
| 188153 | 6 | 15188A/15189A |
| 188154 | 6 | 15191A/15192A |
| 236 | 4 | 15236A |
| 249 | 7 | 15249A/15250A |

E. STAMP
07 JUNE 1989

## MABPAB Equipment Profile (Fixtures)

| CODE | QUANTITY | END ITEM |
|---|---|---|
| F335-03 | 2 | 15136A/15137A |
| F135-02 | 1 | 15191A/15192A |
| F335-07 | 1 | 15249A/15250A |
| F335-08 | 3 | 15119A/15321A |
| F335-09 | 3 | 15126A/15300A |
| F135-08 | 1 | 15140A |
| F135-18 | 3 | 15175A |
| F135-13 | 2 | 15113A |
| F135-14 | 2 | 15025A |
| F335-10 | 3 | 15188A5061/15189A5061 |
| F135-17 | 1 | 15150A |

E. STAMP
07 JUNE 1989

## MABPAB SHEET METAL
### TAGUCHI ORTHOGONAL ARRAY

| | | | | WORKLOAD FLOW TIMES | |
|---|---|---|---|---|---|
| RUN # | MANPOWER | FACTOR | EQUIPMENT | FY 90 | SURGE |
| 1 | 1 | 1 | 1 | | |
| 2 | 1 | 2 | 2 | | |
| 3 | 1 | 3 | 3 | | |
| 4 | 2 | 1 | 3 | | |
| 5 | 2 | 2 | 1 | | |
| 6 | 2 | 3 | 2 | | |
| 7 | 3 | 1 | 2 | | |
| 8 | 3 | 2 | 3 | | |
| 9 | 3 | 3 | 1 | | |

E. STAMP
07 JUNE 1989

# MABPAB SHEET METAL
## TAGUCHI ORTHOGONAL ARRAY

| | | | | | | | WORKLOAD | |
|---|---|---|---|---|---|---|---|---|
| | MANPOWER | | | OVERTIME | | | FLOW TIMES | |
| RUN # | 1 | 2 | 3 | SAT | SUN | EQUIPMENT | FY 90 | SURGE |
| 1 | ALL | | | | | BASE | 66.5 | |
| 2 | ALL | | | YES | | BASE + | 86.4 | |
| 3 | ALL | | | YES | YES | BASE ++ | 94.3 | |
| 4 | 50% | 50% | | | | BASE ++ | 94.2 | |
| 5 | 50% | 50% | | YES | | BASE | 93.9 | |
| 6 | 50% | 50% | | YES | YES | BASE + | 97.0 | |
| 7 | 1/3 | 1/3 | 1/3 | | | BASE + | 96.6 | |
| 8 | 1/3 | 1/3 | 1/3 | YES | | BASE ++ | 99.3 | |
| 9 | 1/3 | 1/3 | 1/3 | YES | YES | BASE | 99.4 | |

E. STAMP
07 JUNE 1989

**MABPAB Equipment Quantities**

| CODE | BASE + | BASE ++ |
|---|---|---|
| 119 | 4 | 6 |
| 126 | 4 | 6 |
| 136 | 8 | 10 |
| 249 | 9 | 11 |
| F135-8 | 2 | 3 |
| F135-18 | 4 | 5 |
| F335-09 | 4 | 5 |

MABPAB EXPERIMENTATION RESULTS
FY 90 WORKLOAD
15126A/15300A

MANPOWER

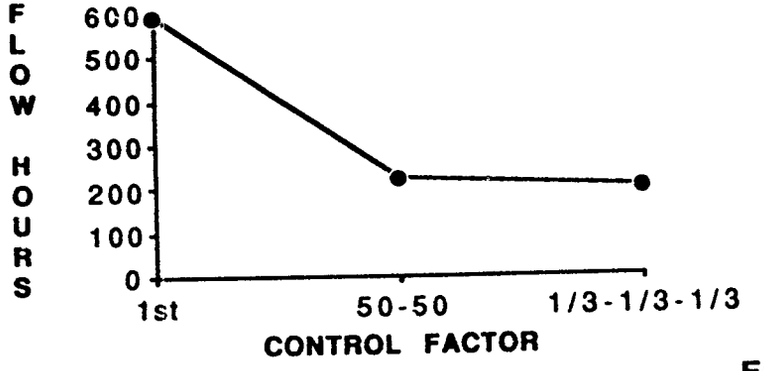


FACTOR

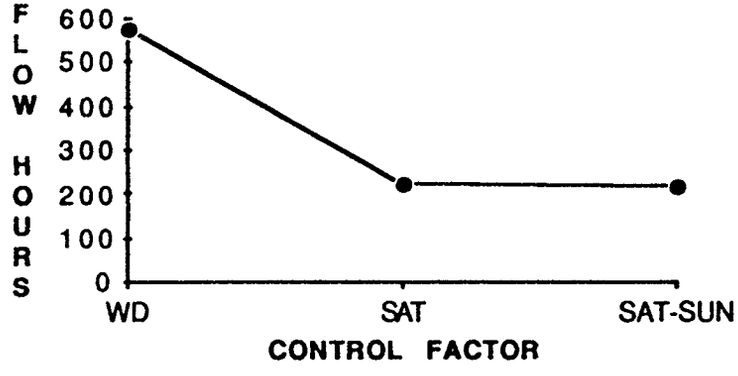


EQUIPMENT

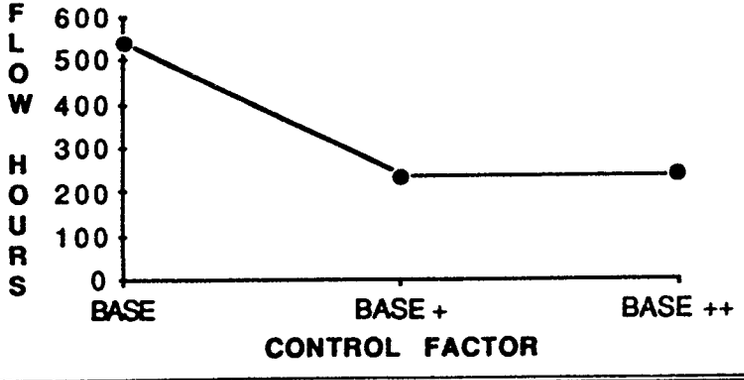


E. STAMPS
07 JUNE 1989

## EXPERIMENT DATA CALULATION
## FLOW HOURS

| RUN # | ITEM # 15126A | ITEM # 15300A | | AVERAGE |
|---|---|---|---|---|
| 1 | 1176 | 1291 | = | 1233.5 |
| 2 | 271 | 288 | = | 279.5 |
| 3 | 257 | 268 | = | 262.5 |
| 4 | 263 | 272 | = | 267.5 |
| 5 | 203 | 208 | = | 202.5 |
| 6 | 201 | 205 | = | 203.0 |
| 7 | 221 | 234 | = | 227.5 |
| 8 | 188 | 190 | = | 189.0 |
| 9 | 185 | 187 | = | 186.0 |

## MABPAB EXPERIMENT DATA CALCULATIONS

MP1
1233.5+279.5+262.5 = 591.8
MP2
267.5+202.5+203 = 224.3
MP3
227.5+189+186 = 200.8

F1
1233.5+267.5+227.5 = 576.2
F2
279.5+202.5+189 = 223.7
F3
262.5+203+186 = 217.2

EQ1
1233.5+202.5+186 = 540.7
EQ2
279.5+203+227.5 = 236.7
EQ3
262.5+267.5+189 = 239.7

.C: OC ROC: MABPAB QUARTER: 4 DATE: 3-JUN-89 TIME: 17:59:00 REPT.ID: EAF W7

ITEM INDUCTIONS

| | 1ST QTR | 2ND QTR | 3RD QTR | 4TH QTR | YTD | |
|---|---|---|---|---|---|---|
| INDUCTIONS OF ITEM 151113A | [illegible] | 35 | 34 | 37 | 134 | (MISTR) |
| INDUCTIONS OF ITEM 150225A | [illegible] | 39 | 35 | 37 | 136 | (MISTR) |
| INDUCTIONS OF ITEM 151119A | [illegible] | 42 | 43 | 41 | 170 | (MISTR) |
| INDUCTIONS OF ITEM 153221A | [illegible] | 38 | 41 | 39 | 161 | (MISTR) |
| INDUCTIONS OF ITEM 151126A | [illegible] | 43 | 44 | 43 | 175 | (MISTR) |
| INDUCTIONS OF ITEM 153300A | [illegible] | 44 | 46 | 45 | 184 | (MISTR) |
| INDUCTIONS OF ITEM 151136A | [illegible] | 51 | 54 | 52 | 212 | (MISTR) |
| INDUCTIONS OF ITEM 151137A | [illegible] | 49 | 50 | 50 | 201 | (MISTR) |
| INDUCTIONS OF ITEM 151140A | [illegible] | 27 | 27 | 29 | 106 | (MISTR) |
| INDUCTIONS OF ITEM 151150A | [illegible] | 40 | 34 | 41 | 146 | (MISTR) |
| INDUCTIONS OF ITEM 151175A | [illegible] | 39 | 38 | 56 | 151 | (MISTR) |
| INDUCTIONS OF ITEM 151178A | 41 | 46 | 45 | 45 | 177 | (MISTR) |
| INDUCTIONS OF ITEM 151188A | [illegible] | 0 | 0 | 0 | 0 | (MISTR) |
| INDUCTIONS OF ITEM 151189A | [illegible] | 4 | 5 | 6 | 19 | (MISTR) |
| INDUCTIONS OF ITEM 151188ASUB1 | [illegible] | 0 | 0 | 0 | 0 | (MISTR) |
| INDUCTIONS OF ITEM 151189ASUB1 | [illegible] | 4 | 5 | 6 | 19 | (MISTR) |
| INDUCTIONS OF ITEM 151191A | [illegible] | 4 | 4 | 4 | 16 | (MISTR) |
| INDUCTIONS OF ITEM 151192A | [illegible] | 3 | 3 | 3 | 12 | (MISTR) |
| INDUCTIONS OF ITEM 151191ASUB1 | [illegible] | 4 | 4 | 4 | 16 | (MISTR) |
| INDUCTIONS OF ITEM 151192ASUB1 | [illegible] | 3 | 3 | 3 | 12 | (MISTR) |
| INDUCTIONS OF ITEM 152236A | [illegible] | 9 | 9 | 0 | 23 | (MISTR) |
| INDUCTIONS OF ITEM 152237A | [illegible] | 0 | 0 | 0 | 0 | (MISTR) |
| INDUCTIONS OF ITEM 152249A | [illegible] | 49 | 48 | 44 | 182 | (MISTR) |
| INDUCTIONS OF ITEM 152250A | 50 | 46 | 50 | 49 | 195 | (MISTR) |
| INDUCTIONS OF ITEM 152237ASUB1 | [illegible] | 9 | 9 | 0 | 23 | (MISTR) |
| TOTAL ITEM INDUCTIONS | 577 | 628 | 631 | 634 | 2470 | |

ALC: OC RCC: MABPAB QUARTER: 4 DATE: 13-JUN-89 TIME: 20:05:11 REPT.ID: Exr #1 Page

PROCESS TIMES SUMMARY

| ITEM | HISTOR. FLOW HOURS | SIMULATED FLOW HOURS | WAITING FOR RESOURCES HOURS | % | PROCESSING FLOW HOURS | % | BACKSHOP HOURS | % | NUMBER OF SAMPLES |
|---|---|---|---|---|---|---|---|---|---|
| 15113A | 864.0 | 994.8 | 93.1 | 9.4% | 709.6 | 71.3% | 192.0 | 19.3% | 124 |
| 15025A | 864.0 | 824.3 | 127.8 | 15.5% | 545.0 | 66.1% | 151.5 | 18.4% | 131 |
| 15119A | 432.0 | 1764.7 | 1222.2 | 69.3% | 446.5 | 25.3% | 96.0 | 5.4% | 65 |
| 15321A | 456.0 | 1521.6 | 998.8 | 65.6% | 426.8 | 28.0% | 96.0 | 6.3% | 74 |
| 15126A | 432.0 | 1254.4 | 945.5 | 75.4% | 213.0 | 17.0% | 96.0 | 7.7% | 111 |
| 15300A | 456.0 | 1219.5 | 904.4 | 74.2% | 219.2 | 18.0% | 96.0 | 7.9% | 117 |
| 15136A | 504.0 | 862.3 | 415.3 | 48.2% | 279.0 | 32.4% | 168.0 | 19.5% | 164 |
| 15137A | 504.0 | 789.7 | 374.5 | 47.4% | 247.2 | 31.3% | 168.0 | 21.3% | 180 |
| 15140A | 504.0 | 1436.4 | 914.7 | 63.7% | 425.6 | 29.6% | 96.0 | 6.7% | 72 |
| 15150A | 744.0 | 828.6 | 151.1 | 18.2% | 527.6 | 63.7% | 150.0 | 18.1% | 141 |
| 15175A | 528.0 | 1016.4 | 456.8 | 44.9% | 414.7 | 40.8% | 145.0 | 14.3% | 82 |
| 15178A | 456.0 | 465.0 | 69.8 | 15.0% | 203.2 | 43.7% | 192.0 | 41.3% | 180 |
| 15188A | | ** NO VALUES RECORDED ** | | | | | | | |
| 15189A | 840.0 | 991.8 | 36.3 | 3.7% | 790.0 | 79.7% | 165.5 | 16.7% | 19 |
| 15188ASUB1 | | ** NO VALUES RECORDED ** | | | | | | | |
| 15189ASUB1 | 0.0 | 275.6 | 33.3 | 12.1% | 146.4 | 53.1% | 96.0 | 34.8% | 19 |
| 15191A | 864.0 | 967.2 | 46.4 | 4.8% | 752.3 | 77.8% | 168.5 | 17.4% | 17 |
| 15192A | 892.0 | 1062.0 | 32.0 | 3.0% | 863.8 | 81.3% | 166.2 | 15.6% | 13 |
| 15191ASUB1 | 0.0 | 265.2 | 22.5 | 8.5% | 122.7 | 46.3% | 120.0 | 45.3% | 18 |
| 15192ASUB1 | 0.0 | 251.0 | 14.6 | 5.8% | 116.4 | 46.4% | 120.0 | 47.8% | 12 |
| 15236A | 840.0 | 784.4 | 69.4 | 8.9% | 436.0 | 55.6% | 279.0 | 35.6% | 24 |
| 15237A | | ** NO VALUES RECORDED ** | | | | | | | |
| 15249A | 984.0 | 2807.9 | 1776.7 | 63.3% | 911.2 | 32.5% | 120.0 | 4.3% | 40 |
| 15250A | 984.0 | 2902.1 | 1873.2 | 64.5% | 908.9 | 31.3% | 120.0 | 4.1% | 47 |
| 15237ASUB1 | 0.0 | 237.0 | 14.0 | 5.9% | 175.0 | 73.8% | 48.0 | 20.3% | 23 |

## PROCESS TIMES SUMMARY

| ITEM | HISTOR. FLOW HOURS | SIMULATED FLOW HOURS | WAITING FOR RESOURCES HOURS | WAITING FOR RESOURCES % | PROCESSING FLOW HOURS | PROCESSING FLOW % | BACKSHOP HOURS | BACKSHOP % | NUMBER OF SAMPLES |
|---|---|---|---|---|---|---|---|---|---|
| 15113A | 864.0 | 699.3 | 14.9 | 2.1% | 492.4 | 70.4% | 192.0 | 27.5% | 127 |
| 15025A | 864.0 | 567.5 | 27.5 | 4.9% | 389.6 | 68.7% | 150.4 | 26.5% | 136 |
| 15119A | 432.0 | 820.9 | 414.5 | 50.5% | 310.4 | 37.8% | 96.0 | 11.7% | 128 |
| 15321A | 456.0 | 812.2 | 420.7 | 51.8% | 295.6 | 36.4% | 96.0 | 11.8% | 130 |
| 15126A | 432.0 | 268.1 | 21.7 | 8.1% | 150.5 | 56.1% | 96.0 | 35.8% | 170 |
| 15300A | 456.0 | 283.3 | 29.4 | 10.4% | 157.9 | 55.7% | 96.0 | 33.9% | 186 |
| 15136A | 504.0 | 382.4 | 5.6 | 1.5% | 208.8 | 54.6% | 168.0 | 43.9% | 209 |
| 15137A | 504.0 | 350.6 | 5.4 | 1.5% | 177.2 | 50.5% | 168.0 | 47.9% | 199 |
| 15140A | 504.0 | 407.6 | 13.3 | 3.3% | 298.3 | 73.2% | 96.0 | 23.6% | 104 |
| 15150A | 744.0 | 536.4 | 23.9 | 4.5% | 363.1 | 67.7% | 149.4 | 27.9% | 142 |
| 15175A | 528.0 | 521.2 | 66.6 | 12.8% | 309.6 | 59.4% | 145.0 | 27.8% | 135 |
| 15178A | 456.0 | 358.4 | 4.5 | 1.2% | 161.9 | 45.2% | 192.0 | 53.6% | 178 |
| 15188A | | ** NO VALUES RECORDED ** | | | | | | | |
| 15189A | 840.0 | 730.4 | 2.3 | 0.3% | 563.9 | 77.2% | 164.2 | 22.5% | 19 |
| 15188ASUB1 | | ** NO VALUES RECORDED ** | | | | | | | |
| 15189ASUB1 | 0.0 | 221.0 | 1.8 | 0.8% | 123.2 | 55.8% | 96.0 | 43.4% | 19 |
| 15191A | 864.0 | 702.6 | 6.4 | 0.9% | 519.8 | 74.0% | 176.5 | 25.1% | 17 |
| 15192A | 892.0 | 763.7 | 2.1 | 0.3% | 595.4 | 78.0% | 166.2 | 21.8% | 13 |
| 15191ASUB1 | 0.0 | 226.2 | 2.9 | 1.3% | 103.3 | 45.7% | 120.0 | 53.1% | 18 |
| 15192ASUB1 | 0.0 | 210.6 | 3.3 | 1.6% | 87.3 | 41.4% | 120.0 | 57.0% | 12 |
| 15236A | 840.0 | 617.7 | 1.8 | 0.3% | 341.9 | 55.4% | 274.0 | 44.4% | 24 |
| 15237A | | ** NO VALUES RECORDED ** | | | | | | | |
| 15249A | 984.0 | 1474.1 | 739.5 | 50.2% | 614.6 | 41.7% | 120.0 | 8.1% | 73 |
| 15250A | 984.0 | 1456.3 | 746.0 | 51.2% | 590.3 | 40.5% | 120.0 | 8.2% | 90 |
| 15237ASUB1 | 0.0 | 189.8 | 0.0 | 0.0% | 141.7 | 74.7% | 48.0 | 25.3% | 23 |

ALC: OC RCC: MABPAB QUARTER: 4 DATE: 12-JUN-89 TIME: 17:11:26 REPT.ID: SURGE #1 PAGE:

ALC: OC RCC: MABPAB QUARTER: 4 DATE: 12-JUN-89 TIME: 17:47:58 REPT.ID: SURGE #1 PAGE

PROCESS TIMES SUMMARY

| ITEM | HISTOR. FLOW HOURS | SIMULATED FLOW HOURS | WAITING FOR RESOURCES HOURS | WAITING FOR RESOURCES % | PROCESSING FLOW HOURS | PROCESSING FLOW % | BACKSHOP HOURS | BACKSHOP % | NUMBER OF SAMPLES |
|---|---|---|---|---|---|---|---|---|---|
| 15113A | 864.0 | 695.1 | 18.0 | 2.6% | 485.1 | 69.8% | 192.0 | 27.6% | 127 |
| 15025A | 864.0 | 559.9 | 25.9 | 4.6% | 383.6 | 68.5% | 150.4 | 26.9% | 135 |
| 15119A | 432.0 | 484.6 | 82.6 | 17.0% | 306.1 | 63.2% | 96.0 | 19.8% | 172 |
| 15321A | 456.0 | 477.7 | 85.9 | 18.0% | 295.8 | 61.9% | 96.0 | 20.1% | 163 |
| 15126A | 432.0 | 257.3 | 9.7 | 3.8% | 151.7 | 58.9% | 96.0 | 37.3% | 169 |
| 15300A | 456.0 | 267.2 | 13.3 | 5.0% | 157.9 | 59.1% | 96.0 | 35.9% | 186 |
| 15136A | 504.0 | 380.4 | 4.3 | 1.1% | 208.2 | 54.7% | 168.0 | 44.2% | 208 |
| 15137A | 504.0 | 350.7 | 3.5 | 1.0% | 179.2 | 51.1% | 168.0 | 47.9% | 199 |
| 15140A | 504.0 | 400.8 | 4.0 | 1.0% | 300.8 | 75.1% | 96.0 | 24.0% | 105 |
| 15150A | 744.0 | 556.6 | 30.8 | 5.5% | 375.7 | 67.5% | 150.1 | 27.0% | 141 |
| 15175A | 528.0 | 467.0 | 18.5 | 4.0% | 303.5 | 65.0% | 145.0 | 31.1% | 144 |
| 15178A | 456.0 | 360.6 | 4.3 | 1.2% | 164.3 | 45.6% | 192.0 | 53.2% | 178 |
| 15188A | | ** NO VALUES RECORDED ** | | | | | | | |
| 15189A | 840.0 | 731.4 | 2.3 | 0.3% | 565.1 | 77.3% | 164.0 | 22.4% | 18 |
| 15188ASUB1 | | ** NO VALUES RECORDED ** | | | | | | | |
| 15189ASUB1 | 0.0 | 201.7 | 1.8 | 0.9% | 104.0 | 51.5% | 96.0 | 47.6% | 19 |
| 15191A | 864.0 | 731.8 | 6.4 | 0.9% | 551.8 | 75.4% | 173.6 | 23.7% | 17 |
| 15192A | 892.0 | 755.2 | 2.2 | 0.3% | 591.0 | 78.3% | 162.0 | 21.5% | 12 |
| 15191ASUB1 | 0.0 | 211.9 | 3.6 | 1.7% | 88.3 | 41.7% | 120.0 | 56.6% | 18 |
| 15192ASUB1 | 0.0 | 226.5 | 4.6 | 2.0% | 102.0 | 45.0% | 120.0 | 53.0% | 12 |
| 15236A | 840.0 | 617.1 | 1.8 | 0.3% | 343.4 | 55.6% | 272.0 | 44.1% | 24 |
| 15237A | | ** NO VALUES RECORDED ** | | | | | | | |
| 15249A | 984.0 | 1183.4 | 472.1 | 39.9% | 591.2 | 50.0% | 120.0 | 10.1% | 89 |
| 15250A | 984.0 | 1184.6 | 468.7 | 39.6% | 596.0 | 50.3% | 120.0 | 10.1% | 111 |
| 15237ASUB1 | 0.0 | 194.2 | 0.0 | 0.0% | 146.1 | 75.3% | 48.0 | 24.7% | 23 |

ALC: OC RCC: MABPAB QUARTER: 4 DATE: 13-JUN-89 TIME: 19:43:17 REPT.ID: CAL W. ....

PROCESS TIMES SUMMARY

| ITEM | HISTOR. FLOW HOURS | SIMULATED FLOW HOURS | WAITING FOR RESOURCES HOURS | WAITING FOR RESOURCES % | PROCESSING FLOW HOURS | PROCESSING FLOW % | BACKSHOP HOURS | BACKSHOP % | NUMBER OF SAMPLES |
|---|---|---|---|---|---|---|---|---|---|
| 15113A | 864.0 | 630.2 | 46.2 | 7.3% | 392.0 | 62.2% | 192.0 | 30.5% | 128 |
| 15025A | 864.0 | 476.1 | 39.5 | 8.3% | 284.7 | 59.8% | 151.8 | 31.9% | 135 |
| 15119A | 432.0 | 376.3 | 42.2 | 11.2% | 238.1 | 63.3% | 96.0 | 25.5% | 168 |
| 15321A | 456.0 | 372.4 | 46.1 | 12.4% | 230.3 | 61.8% | 96.0 | 25.8% | 163 |
| 15126A | 432.0 | 261.8 | 41.1 | 15.7% | 124.7 | 47.6% | 96.0 | 36.7% | 170 |
| 15300A | 456.0 | 267.6 | 46.4 | 17.3% | 125.3 | 46.8% | 96.0 | 35.9% | 186 |
| 15136A | 504.0 | 392.7 | 47.9 | 12.2% | 176.8 | 45.0% | 168.0 | 42.8% | 211 |
| 15137A | 504.0 | 362.5 | 24.7 | 6.8% | 169.8 | 46.8% | 168.0 | 46.3% | 200 |
| 15140A | 504.0 | 347.4 | 20.0 | 5.7% | 231.5 | 66.6% | 96.0 | 27.6% | 105 |
| 15150A | 744.0 | 475.5 | 44.0 | 9.2% | 284.2 | 59.8% | 147.3 | 31.0% | 145 |
| 15175A | 528.0 | 432.1 | 50.2 | 11.6% | 236.9 | 54.8% | 145.0 | 33.6% | 145 |
| 15178A | 456.0 | 381.8 | 35.8 | 9.4% | 154.0 | 40.3% | 192.0 | 50.3% | 179 |
| 15188A | | ** NO VALUES RECORDED ** | | | | | | | |
| 15189A | 840.0 | 652.7 | 53.6 | 8.2% | 436.5 | 66.9% | 162.7 | 24.9% | 18 |
| 15188ASUB1 | | ** NO VALUES RECORDED ** | | | | | | | |
| 15189ASUB1 | 0.0 | 217.5 | 24.8 | 11.4% | 96.7 | 44.5% | 96.0 | 44.1% | 19 |
| 15191A | 864.0 | 659.5 | 44.9 | 6.8% | 447.5 | 67.9% | 167.1 | 25.3% | 17 |
| 15192A | 892.0 | 656.8 | 29.7 | 4.5% | 466.4 | 71.0% | 160.6 | 24.5% | 13 |
| 15191ASUB1 | 0.0 | 205.3 | 27.0 | 13.2% | 58.3 | 28.4% | 120.0 | 58.4% | 18 |
| 15192ASUB1 | 0.0 | 207.8 | 22.0 | 10.6% | 65.7 | 31.6% | 120.0 | 57.8% | 12 |
| 15236A | 840.0 | 631.8 | 76.6 | 12.1% | 276.2 | 43.7% | 279.0 | 44.2% | 24 |
| 15237A | | ** NO VALUES RECORDED ** | | | | | | | |
| 15249A | 984.0 | 903.5 | 319.3 | 35.3% | 464.2 | 51.4% | 120.0 | 13.3% | 116 |
| 15250A | 984.0 | 907.6 | 320.3 | 35.3% | 467.2 | 51.5% | 120.0 | 13.2% | 146 |
| 15237ASUB1 | 0.0 | 163.3 | 16.2 | 9.9% | 99.1 | 60.7% | 48.0 | 29.4% | 23 |

ALC: OC RCC: MABPAB QUARTER: 4 DATE: 3-JUN-89 TIME: 12:48:52 REPT.ID: [illegible]

PROCESS TIMES SUMMARY

| ITEM | HISTOR. FLOW HOURS | SIMULATED FLOW HOURS | WAITING FOR RESOURCES HOURS | WAITING FOR RESOURCES % | PROCESSING FLOW HOURS | PROCESSING FLOW % | BACKSHOP HOURS | BACKSHOP % | NUMBER OF SAMPLES |
|---|---|---|---|---|---|---|---|---|---|
| 15113A | 864.0 | 473.1 | 3.8 | 0.8% | 277.3 | 58.6% | 192.0 | 40.6% | 129 |
| 15025A | 864.0 | 374.6 | 6.3 | 1.7% | 218.4 | 58.3% | 149.9 | 40.0% | 134 |
| 15119A | 432.0 | 330.8 | 56.1 | 17.0% | 178.8 | 54.0% | 96.0 | 29.0% | 166 |
| 15321A | 456.0 | 327.9 | 58.7 | 17.9% | 173.3 | 52.8% | 96.0 | 29.3% | 161 |
| 15126A | 432.0 | 202.6 | 7.1 | 3.5% | 99.4 | 49.1% | 96.0 | 47.4% | 170 |
| 15300A | 456.0 | 207.8 | 10.3 | 5.0% | 101.5 | 48.9% | 96.0 | 46.2% | 189 |
| 15136A | 504.0 | 323.3 | 3.0 | 0.9% | 152.3 | 47.1% | 168.0 | 52.0% | 209 |
| 15137A | 504.0 | 296.4 | 3.4 | 1.1% | 125.1 | 42.2% | 168.0 | 56.7% | 201 |
| 15140A | 504.0 | 286.4 | 18.9 | 6.6% | 171.5 | 59.9% | 96.0 | 33.5% | 106 |
| 15150A | 744.0 | 368.7 | 6.4 | 1.7% | 212.5 | 57.6% | 149.8 | 40.6% | 145 |
| 15175A | 528.0 | 365.2 | 17.9 | 4.9% | 202.3 | 55.4% | 145.0 | 39.7% | 148 |
| 15178A | 456.0 | 310.7 | 2.0 | 0.7% | 116.6 | 37.5% | 192.0 | 61.8% | 178 |
| 15188A | | ** NO VALUES RECORDED ** | | | | | | | |
| 15189A | 840.0 | 498.5 | 2.9 | 0.6% | 330.0 | 66.2% | 165.6 | 33.2% | 20 |
| 15188ASUB1 | | ** NO VALUES RECORDED ** | | | | | | | |
| 15189ASUB1 | 0.0 | 180.9 | 1.3 | 0.7% | 83.5 | 46.2% | 96.0 | 53.1% | 20 |
| 15191A | 864.0 | 478.7 | 2.7 | 0.6% | 301.9 | 63.1% | 174.1 | 36.4% | 17 |
| 15192A | 892.0 | 520.5 | 4.1 | 0.8% | 352.1 | 67.6% | 164.3 | 31.6% | 13 |
| 15191ASUB1 | 0.0 | 182.4 | 3.7 | 2.0% | 58.6 | 32.2% | 120.0 | 65.8% | 18 |
| 15192ASUB1 | 0.0 | 179.4 | 2.6 | 1.5% | 56.8 | 31.7% | 120.0 | 66.9% | 12 |
| 15236A | 840.0 | 509.8 | 1.9 | 0.4% | 231.4 | 45.4% | 276.5 | 54.2% | 23 |
| 15237A | | ** NO VALUES RECORDED ** | | | | | | | |
| 15249A | 984.0 | 920.0 | 478.7 | 52.0% | 321.3 | 34.9% | 120.0 | 13.0% | 112 |
| 15250A | 984.0 | 910.6 | 467.7 | 51.4% | 322.9 | 35.5% | 120.0 | 13.2% | 142 |
| 15237ASUB1 | 0.0 | 140.5 | 0.1 | 0.0% | 92.5 | 65.8% | 48.0 | 34.2% | 23 |

ALC: OC RCC: MABPAB QUARTER: 4 DATE: 13-JUN-89 TIME: 19:09:55 REPT.ID: EXP #6 PAGE: 1

PROCESS TIMES SUMMARY

| ITEM | HISTOR. FLOW HOURS | SIMULATED FLOW HOURS | WAITING FOR RESOURCES HOURS | WAITING FOR RESOURCES % | PROCESSING FLOW HOURS | PROCESSING FLOW % | BACKSHOP HOURS | BACKSHOP % | NUMBER OF SAMPLES |
|---|---|---|---|---|---|---|---|---|---|
| 15113A | 864.0 | 476.8 | 3.6 | 0.8% | 281.2 | 59.0% | 192.0 | 40.3% | 129 |
| 15025A | 864.0 | 370.9 | 4.3 | 1.2% | 215.8 | 58.2% | 150.9 | 40.7% | 133 |
| 15119A | 432.0 | 288.1 | 15.5 | 5.4% | 176.6 | 61.3% | 96.0 | 33.3% | 167 |
| 15321A | 456.0 | 283.4 | 18.0 | 6.4% | 169.4 | 59.8% | 96.0 | 33.9% | 164 |
| 15126A | 432.0 | 200.2 | 4.8 | 2.4% | 99.4 | 49.6% | 96.0 | 47.9% | 170 |
| 15300A | 456.0 | 202.8 | 5.1 | 2.5% | 101.7 | 50.1% | 96.0 | 47.3% | 189 |
| 15136A | 504.0 | 321.9 | 2.2 | 0.7% | 151.7 | 47.1% | 168.0 | 52.2% | 210 |
| 15137A | 504.0 | 295.6 | 2.1 | 0.7% | 125.5 | 42.4% | 168.0 | 56.8% | 201 |
| 15140A | 504.0 | 274.1 | 3.9 | 1.4% | 174.3 | 63.6% | 96.0 | 35.0% | 106 |
| 15150A | 744.0 | 368.4 | 5.8 | 1.6% | 213.5 | 57.9% | 149.2 | 40.5% | 144 |
| 15175A | 528.0 | 350.0 | 4.4 | 1.3% | 200.6 | 57.3% | 145.0 | 41.4% | 149 |
| 15178A | 456.0 | 310.7 | 2.1 | 0.7% | 116.7 | 37.6% | 192.0 | 61.8% | 178 |
| 15188A | | ** NO VALUES RECORDED ** | | | | | | | |
| 15189A | 840.0 | 502.4 | 2.4 | 0.5% | 333.2 | 66.3% | 166.8 | 33.2% | 20 |
| 15188ASUB1 | | ** NO VALUES RECORDED ** | | | | | | | |
| 15189ASUB1 | 0.0 | 182.2 | 2.2 | 1.2% | 84.0 | 46.1% | 96.0 | 52.7% | 20 |
| 15191A | 864.0 | 489.2 | 3.1 | 0.6% | 312.9 | 64.0% | 173.2 | 35.4% | 17 |
| 15192A | 892.0 | 504.6 | 2.3 | 0.5% | 337.9 | 67.0% | 164.3 | 32.6% | 13 |
| 15191ASUB1 | 0.0 | 181.2 | 0.6 | 0.3% | 60.6 | 33.4% | 120.0 | 66.2% | 18 |
| 15192ASUB1 | 0.0 | 183.9 | 3.9 | 2.1% | 60.0 | 32.6% | 120.0 | 65.3% | 12 |
| 15236A | 840.0 | 514.7 | 1.8 | 0.4% | 239.5 | 46.5% | 273.4 | 53.1% | 23 |
| 15237A | | ** NO VALUES RECORDED ** | | | | | | | |
| 15249A | 984.0 | 729.3 | 289.3 | 39.7% | 320.0 | 43.9% | 120.0 | 16.5% | 143 |
| 15250A | 984.0 | 725.3 | 283.2 | 39.1% | 322.1 | 44.4% | 120.0 | 16.5% | 183 |
| 15237ASUB1 | 0.0 | 142.2 | 0.0 | 0.0% | 94.1 | 66.2% | 48.0 | 33.8% | 23 |

ALC: OC RCC: MARPAB QUARTER: 4 DATE: 13-JUN-89 TIME: 18:34:25 REPT.ID: EXP #/ PAGE: .

PROCESS TIMES SUMMARY

| ITEM | HISTOR. FLOW HOURS | SIMULATED FLOW HOURS | WAITING FOR RESOURCES HOURS | % | PROCESSING FLOW HOURS | % | BACKSHOP HOURS | % | NUMBER OF SAMPLES |
|---|---|---|---|---|---|---|---|---|---|
| 15113A | 864.0 | 514.8 | 37.8 | 7.3% | 285.0 | 55.4% | 192.0 | 37.3% | 130 |
| 15025A | 864.0 | 393.7 | 30.1 | 7.6% | 214.2 | 54.4% | 149.4 | 38.0% | 133 |
| 15119A | 432.0 | 305.0 | 40.6 | 13.3% | 168.4 | 55.2% | 96.0 | 31.5% | 166 |
| 15321A | 456.0 | 310.8 | 48.2 | 15.5% | 166.6 | 53.6% | 96.0 | 30.9% | 166 |
| 15126A | 432.0 | 221.5 | 24.7 | 11.1% | 100.8 | 45.5% | 96.0 | 43.3% | 170 |
| 15300A | 456.0 | 234.4 | 33.8 | 14.4% | 104.6 | 44.6% | 96.0 | 41.0% | 186 |
| 15136A | 504.0 | 363.2 | 33.3 | 9.2% | 161.9 | 44.6% | 168.0 | 46.3% | 208 |
| 15137A | 504.0 | 313.9 | 19.4 | 6.2% | 126.5 | 40.3% | 168.0 | 53.5% | 201 |
| 15140A | 504.0 | 288.3 | 26.2 | 9.1% | 166.1 | 57.6% | 96.0 | 33.3% | 106 |
| 15150A | 744.0 | 401.8 | 34.0 | 8.5% | 218.7 | 54.4% | 149.2 | 37.1% | 144 |
| 15175A | 528.0 | 385.9 | 50.7 | 13.1% | 190.2 | 49.3% | 145.0 | 37.6% | 146 |
| 15178A | 456.0 | 336.4 | 28.3 | 8.4% | 116.1 | 34.5% | 192.0 | 57.1% | 178 |
| 15188A | | ** NO VALUES RECORDED ** | | | | | | | |
| 15189A | 840.0 | 528.1 | 52.8 | 10.0% | 312.1 | 59.1% | 163.2 | 30.9% | 20 |
| 15188ASUB1 | | ** NO VALUES RECORDED ** | | | | | | | |
| 15189ASUB1 | 0.0 | 190.8 | 13.7 | 7.2% | 81.1 | 42.5% | 96.0 | 50.3% | 19 |
| 15191A | 864.0 | 531.3 | 55.8 | 10.5% | 301.0 | 56.6% | 174.6 | 32.9% | 17 |
| 15192A | 892.0 | 532.1 | 31.2 | 5.9% | 340.2 | 63.9% | 160.6 | 30.2% | 13 |
| 15191ASUB1 | 0.0 | 183.6 | 13.7 | 7.5% | 49.9 | 27.2% | 120.0 | 65.4% | 18 |
| 15192ASUB1 | 0.0 | 183.9 | 9.2 | 5.0% | 54.6 | 29.7% | 120.0 | 65.3% | 12 |
| 15236A | 840.0 | 561.4 | 48.8 | 8.7% | 241.3 | 43.0% | 271.3 | 48.3% | 23 |
| 15237A | | ** NO VALUES RECORDED ** | | | | | | | |
| 15249A | 984.0 | 734.5 | 296.3 | 40.3% | 318.3 | 43.3% | 120.0 | 16.3% | 144 |
| 15250A | 984.0 | 738.7 | 287.9 | 39.0% | 330.7 | 44.8% | 120.0 | 16.2% | 179 |
| 15237ASUB1 | 0.0 | 145.2 | 12.2 | 8.4% | 85.0 | 58.5% | 48.0 | 33.1% | 23 |

PROCESS TIMES SUMMARY

| ITEM | HISTOR. FLOW HOURS | SIMULATED FLOW HOURS | WAITING FOR RESOURCES HOURS | % | PROCESSING FLOW HOURS | % | BACKSHOP HOURS | % | NUMBER OF SAMPLES |
|---|---|---|---|---|---|---|---|---|---|
| 15113A | 864.0 | 408.3 | 3.5 | 0.8% | 212.9 | 52.1% | 192.0 | 47.0% | 131 |
| 15025A | 864.0 | 324.0 | 7.4 | 2.3% | 166.2 | 51.3% | 150.4 | 46.4% | 134 |
| 15119A | 432.0 | 235.3 | 4.7 | 2.0% | 134.7 | 57.2% | 96.0 | 40.8% | 171 |
| 15321A | 456.0 | 232.8 | 6.1 | 2.6% | 130.7 | 56.1% | 96.0 | 41.2% | 164 |
| 15126A | 432.0 | 187.7 | 5.6 | 3.0% | 86.2 | 45.9% | 96.0 | 51.1% | 170 |
| 15300A | 456.0 | 190.0 | 6.2 | 3.3% | 87.8 | 46.2% | 96.0 | 50.5% | 189 |
| 15136A | 504.0 | 311.9 | 7.9 | 2.5% | 136.0 | 43.6% | 168.0 | 53.9% | 211 |
| 15137A | 504.0 | 284.4 | 5.3 | 1.8% | 111.1 | 39.1% | 168.0 | 59.1% | 200 |
| 15140A | 504.0 | 231.7 | 2.4 | 1.0% | 133.4 | 57.6% | 96.0 | 41.4% | 107 |
| 15150A | 744.0 | 324.3 | 5.5 | 1.7% | 169.2 | 52.2% | 149.6 | 46.1% | 145 |
| 15175A | 528.0 | 317.5 | 3.0 | 0.9% | 169.5 | 53.4% | 145.0 | 45.7% | 149 |
| 15178A | 456.0 | 299.0 | 2.3 | 0.8% | 104.7 | 35.0% | 192.0 | 64.2% | 178 |
| 15188A | | ** NO VALUES RECORDED ** | | | | | | | |
| 15189A | 840.0 | 450.4 | 15.4 | 3.4% | 270.7 | 60.1% | 164.4 | 36.5% | 20 |
| 15188ASUB1 | | ** NO VALUES RECORDED ** | | | | | | | |
| 15189ASUB1 | 0.0 | 176.0 | 2.9 | 1.7% | 77.0 | 43.8% | 96.0 | 54.5% | 20 |
| 15191A | 864.0 | 417.2 | 9.9 | 2.4% | 243.3 | 58.3% | 164.0 | 39.3% | 18 |
| 15192A | 892.0 | 422.8 | 5.7 | 1.3% | 257.2 | 60.8% | 160.0 | 37.8% | 12 |
| 15191ASUB1 | 0.0 | 176.4 | 4.2 | 2.4% | 52.2 | 29.6% | 120.0 | 68.0% | 18 |
| 15192ASUB1 | 0.0 | 169.9 | 0.5 | 0.3% | 49.4 | 29.1% | 120.0 | 70.6% | 12 |
| 15236A | 840.0 | 477.6 | 3.9 | 0.8% | 205.5 | 43.0% | 268.2 | 56.2% | 23 |
| 15237A | | ** NO VALUES RECORDED ** | | | | | | | |
| 15249A | 984.0 | 361.1 | 10.4 | 2.9% | 230.7 | 63.9% | 120.0 | 33.2% | 177 |
| 15250A | 984.0 | 359.3 | 9.8 | 2.7% | 229.6 | 63.9% | 120.0 | 33.4% | 198 |
| 15237ASUB1 | 0.0 | 125.7 | 0.4 | 0.3% | 77.3 | 61.5% | 48.0 | 38.2% | 23 |

ALC: OC RCC: MABPAB QUARTER: 4 DATE: 3-JUN-89 TIME: 17:59:00 REPT.ID: EXP #9 PAGE: 1

PROCESS TIMES SUMMARY

| ITEM | HISTOR. FLOW HOURS | SIMULATED FLOW HOURS | WAITING FOR RESOURCES HOURS | % | PROCESSING FLOW HOURS | % | BACKSHOP HOURS | % | NUMBER OF SAMPLES |
|---|---|---|---|---|---|---|---|---|---|
| 15113A | 864.0 | 405.7 | 3.1 | 0.8% | 210.6 | 51.9% | 192.0 | 47.3% | 130 |
| 15025A | 864.0 | 319.0 | 2.9 | 0.9% | 167.1 | 52.4% | 149.0 | 46.7% | 134 |
| 15119A | 432.0 | 244.6 | 13.6 | 5.5% | 135.0 | 55.2% | 96.0 | 39.2% | 171 |
| 15321A | 456.0 | 242.4 | 16.8 | 6.9% | 129.6 | 53.5% | 96.0 | 39.6% | 164 |
| 15126A | 432.0 | 184.9 | 3.5 | 1.9% | 85.4 | 46.2% | 96.0 | 51.9% | 170 |
| 15300A | 456.0 | 186.9 | 4.3 | 2.3% | 86.5 | 46.3% | 96.0 | 51.4% | 189 |
| 15136A | 504.0 | 306.4 | 2.1 | 0.7% | 136.3 | 44.5% | 168.0 | 54.8% | 211 |
| 15137A | 504.0 | 281.1 | 2.1 | 0.8% | 111.0 | 39.5% | 168.0 | 59.8% | 200 |
| 15140A | 504.0 | 239.3 | 10.3 | 4.3% | 133.0 | 55.6% | 96.0 | 40.1% | 107 |
| 15150A | 744.0 | 326.5 | 4.4 | 1.3% | 169.3 | 51.9% | 152.8 | 46.8% | 145 |
| 15175A | 528.0 | 318.0 | 4.6 | 1.5% | 168.3 | 52.9% | 145.0 | 45.6% | 150 |
| 15178A | 456.0 | 298.8 | 2.0 | 0.7% | 104.8 | 35.1% | 192.0 | 64.3% | 178 |
| 15188A | | ** NO VALUES RECORDED ** | | | | | | | |
| 15189A | 840.0 | 434.3 | 2.5 | 0.6% | 267.4 | 61.6% | 164.4 | 37.9% | 20 |
| 15188ASUB1 | | ** NO VALUES RECORDED ** | | | | | | | |
| 15189ASUB1 | 0.0 | 173.0 | 0.6 | 0.4% | 76.4 | 44.2% | 96.0 | 55.5% | 20 |
| 15191A | 864.0 | 402.5 | 2.2 | 0.5% | 232.3 | 57.7% | 168.0 | 41.7% | 18 |
| 15192A | 892.0 | 414.0 | 2.1 | 0.5% | 252.0 | 60.9% | 160.0 | 38.6% | 12 |
| 15191ASUB1 | 0.0 | 170.8 | 0.6 | 0.3% | 50.2 | 29.4% | 120.0 | 70.3% | 18 |
| 15192ASUB1 | 0.0 | 170.3 | 0.6 | 0.4% | 49.6 | 29.2% | 120.0 | 70.5% | 12 |
| 15236A | 840.0 | 483.8 | 1.9 | 0.4% | 201.2 | 41.6% | 280.7 | 58.0% | 23 |
| 15237A | | ** NO VALUES RECORDED ** | | | | | | | |
| 15249A | 984.0 | 588.1 | 237.5 | 40.3% | 230.9 | 39.3% | 120.0 | 20.4% | 178 |
| 15250A | 984.0 | 596.5 | 242.9 | 40.7% | 233.6 | 39.2% | 120.0 | 20.1% | 198 |
| 15237ASUB1 | 0.0 | 125.3 | 0.0 | 0.0% | 77.3 | 61.7% | 48.0 | 38.3% | 23 |

## ITEM INDUCTIONS

| | 1ST QTR | 2ND QTR | 3RD QTR | 4TH QTR | YTD | |
|---|---|---|---|---|---|---|
| INDUCTIONS OF ITEM 15113A | 45 | 56 | 55 | 63 | 219 | (MISTR) |
| INDUCTIONS OF ITEM 15025A | 40 | 63 | 56 | 65 | 224 | (MISTR) |
| INDUCTIONS OF ITEM 15119A | 71 | 68 | 69 | 69 | 277 | (MISTR) |
| INDUCTIONS OF ITEM 15321A | 69 | 61 | 66 | 53 | 249 | (MISTR) |
| INDUCTIONS OF ITEM 15126A | 72 | 69 | 71 | 67 | 279 | (MISTR) |
| INDUCTIONS OF ITEM 15300A | 79 | 71 | 74 | 63 | 287 | (MISTR) |
| INDUCTIONS OF ITEM 15136A | 88 | 82 | 87 | 101 | 358 | (MISTR) |
| INDUCTIONS OF ITEM 15137A | 84 | 79 | 80 | 84 | 327 | (MISTR) |
| INDUCTIONS OF ITEM 15140A | 37 | 44 | 44 | 53 | 178 | (MISTR) |
| INDUCTIONS OF ITEM 15150A | 50 | 64 | 55 | 85 | 254 | (MISTR) |
| INDUCTIONS OF ITEM 15175A | 29 | 63 | 61 | 108 | 261 | (MISTR) |
| INDUCTIONS OF ITEM 15178A | 66 | 74 | 72 | 74 | 286 | (MISTR) |
| INDUCTIONS OF ITEM 15188A | 0 | 0 | 0 | 0 | 0 | (MISTR) |
| INDUCTIONS OF ITEM 15189A | 7 | 7 | 8 | 9 | 31 | (MISTR) |
| INDUCTIONS OF ITEM 15188ASUB1 | 0 | 0 | 0 | 0 | 0 | (MISTR) |
| INDUCTIONS OF ITEM 15189ASUB1 | 7 | 7 | 8 | 9 | 31 | (MISTR) |
| INDUCTIONS OF ITEM 15191A | 7 | 7 | 7 | 3 | 24 | (MISTR) |
| INDUCTIONS OF ITEM 15192A | 5 | 5 | 5 | 3 | 18 | (MISTR) |
| INDUCTIONS OF ITEM 15191ASUB1 | 7 | 7 | 7 | 3 | 24 | (MISTR) |
| INDUCTIONS OF ITEM 15192ASUB1 | 5 | 5 | 5 | 3 | 18 | (MISTR) |
| INDUCTIONS OF ITEM 15236A | 8 | 15 | 15 | 9 | 47 | (MISTR) |
| INDUCTIONS OF ITEM 15237A | 0 | 0 | 0 | 0 | 0 | (MISTR) |
| INDUCTIONS OF ITEM 15249A | 66 | 79 | 77 | 75 | 297 | (MISTR) |
| INDUCTIONS OF ITEM 15250A | 80 | 74 | 80 | 75 | 309 | (MISTR) |
| INDUCTIONS OF ITEM 15237ASUB1 | 7 | 16 | 15 | 8 | 46 | (MISTR) |
| TOTAL ITEM INDUCTIONS | 929 | 1016 | 1017 | 1082 | 4044 | |

LC: OC RCC: MABPAB QUARTER: 4 DATE: 13-JUN-89 TIME: 08:42:11 REPT.ID: SURGE #1 PAGE:

PROCESS TIMES SUMMARY

| ITEM | HISTOR. FLOW HOURS | SIMULATED FLOW HOURS | WAITING FOR RESOURCES HOURS | % | PROCESSING FLOW HOURS | % | BACKSHOP HOURS | % | NUMBER OF SAMPLES |
|---|---|---|---|---|---|---|---|---|---|
| 5113A | 864.0 | 1327.6 | 417.0 | 31.4% | 718.6 | 54.1% | 192.0 | 14.5% | 189 |
| 5025A | 864.0 | 1566.0 | 848.3 | 54.2% | 566.8 | 36.2% | 150.9 | 9.6% | 150 |
| 5119A | 432.0 | 3705.3 | 3148.6 | 85.0% | 460.7 | 12.4% | 96.0 | 2.6% | 51 |
| 5321A | 456.0 | 2865.5 | 2343.4 | 81.8% | 426.1 | 14.9% | 96.0 | 3.4% | 71 |
| 5126A | 432.0 | 2417.5 | 2111.1 | 87.3% | 210.3 | 8.7% | 96.0 | 4.0% | 116 |
| 5300A | 456.0 | 2376.9 | 2057.2 | 86.5% | 223.7 | 9.4% | 96.0 | 4.0% | 112 |
| 5136A | 504.0 | 1746.1 | 1299.6 | 74.4% | 278.5 | 15.9% | 168.0 | 9.6% | 161 |
| 5137A | 504.0 | 1538.3 | 1119.9 | 72.8% | 250.4 | 16.3% | 168.0 | 10.9% | 196 |
| 5140A | 504.0 | 2770.6 | 2243.6 | 81.0% | 431.0 | 15.6% | 96.0 | 3.5% | 71 |
| 5150A | 744.0 | 1476.1 | 782.6 | 53.0% | 545.0 | 36.9% | 148.5 | 10.1% | 185 |
| 5175A | 528.0 | 2238.8 | 1677.4 | 74.9% | 416.4 | 18.6% | 145.0 | 6.5% | 82 |
| 5178A | 456.0 | 738.0 | 331.1 | 44.9% | 214.9 | 29.1% | 192.0 | 26.0% | 286 |
| 5188A | | ** NO VALUES RECORDED ** | | | | | | | |
| 5189A | 840.0 | 1640.3 | 647.0 | 39.4% | 830.8 | 50.7% | 162.4 | 9.9% | 30 |
| 5188ASUB1 | | ** NO VALUES RECORDED ** | | | | | | | |
| 5189ASUB1 | 0.0 | 279.3 | 39.4 | 14.1% | 143.9 | 51.5% | 96.0 | 34.4% | 28 |
| 5191A | 864.0 | 1683.3 | 619.6 | 36.8% | 894.8 | 53.2% | 168.9 | 10.0% | 27 |
| 5192A | 892.0 | 1711.7 | 659.1 | 38.5% | 889.7 | 52.0% | 162.9 | 9.5% | 19 |
| 5191ASUB1 | 0.0 | 260.2 | 34.7 | 13.3% | 105.6 | 40.6% | 120.0 | 46.1% | 25 |
| 5192ASUB1 | 0.0 | 265.3 | 44.4 | 16.7% | 100.9 | 38.0% | 120.0 | 45.2% | 19 |
| 5236A | 840.0 | 804.9 | 96.3 | 12.0% | 428.9 | 53.3% | 279.8 | 34.8% | 44 |
| 5237A | | ** NO VALUES RECORDED ** | | | | | | | |
| 5249A | 984.0 | 5571.9 | 4489.9 | 80.6% | 962.0 | 17.3% | 120.0 | 2.2% | 27 |
| 5250A | 984.0 | 5890.9 | 4846.2 | 82.3% | 924.7 | 15.7% | 120.0 | 2.0% | 33 |
| 5237ASUB1 | 0.0 | 245.6 | 14.3 | 5.8% | 183.4 | 74.7% | 48.0 | 19.5% | 46 |

: OC RCC: MABPAB QUARTER: 4 DATE: 13-JUN-89 TIME: 08:49:39 [illegible]

[illegible]RECT LABOR STATISTICS

| ITEM | EXPECTED HOURS | STANDARD HOURS | SIMULATED AVERAGE LABOR HOURS | STANDARD DEVIATION | SIMULATED MINIMUM LABOR HOURS | SIMULATED MAXIMUM LABOR HOURS | NUMBER OF SAMPLES |
|---|---|---|---|---|---|---|---|
| 15113A | 123.49 | 147.70 | 122.68 | 5.78 | 102.60 | 137.36 | 218 |
| 15025A | 112.59 | 163.50 | 112.84 | 10.01 | 91.61 | 139.92 | 208 |
| 15119A | 79.62 | 89.80 | 77.99 | 0.76 | 75.62 | 78.62 | 143 |
| 15321A | 113.86 | 90.20 | 112.85 | 1.62 | 108.17 | 117.18 | 112 |
| 15126A | 56.93 | 88.70 | 54.04 | 4.01 | 44.43 | 63.13 | 225 |
| 15300A | 60.40 | 98.30 | 57.44 | 4.08 | 47.90 | 66.50 | 234 |
| 15136A | 37.66 | 79.20 | 37.88 | 5.16 | 28.08 | 46.79 | 355 |
| 15137A | 34.09 | 79.20 | 34.33 | 6.05 | 20.95 | 46.79 | 328 |
| 15140A | 64.80 | 51.70 | 65.06 | 6.02 | 44.57 | 77.54 | 173 |
| 15150A | 81.02 | 85.20 | 81.15 | 12.99 | 43.49 | 109.90 | 229 |
| 15175A | 52.36 | 73.90 | 53.30 | 5.32 | 44.98 | 65.25 | 157 |
| 15178A | 24.20 | 19.00 | 24.20 | 2.39 | 16.15 | 27.80 | 289 |
| 15188A | 193.59 | 193.90 | ** NO VALUES RECORDED ** | | | | |
| 15189A | 193.59 | 193.90 | 196.16 | 46.12 | 121.66 | 288.33 | 29 |
| 15188ASUB1 | 14.88 | 15.00 | ** NO VALUES RECORDED ** | | | | |
| 15189ASUB1 | 14.88 | 15.00 | 22.17 | 12.39 | 9.93 | 51.28 | 30 |
| 15191A | 178.33 | 201.80 | 175.16 | 39.88 | 87.44 | 255.45 | 27 |
| 15192A | 195.53 | 201.80 | 194.12 | 37.20 | 137.71 | 271.40 | 19 |
| 15191ASUB1 | 14.70 | 15.00 | 28.69 | 12.49 | 9.75 | 49.05 | 26 |
| 15192ASUB1 | 14.70 | 15.00 | 27.09 | 12.62 | 10.35 | 48.33 | 18 |
| 15236A | 104.59 | 121.60 | 106.31 | 11.47 | 74.60 | 127.19 | 45 |
| 15237A | 22.55 | 28.60 | ** NO VALUES RECORDED ** | | | | |
| 15249A | 161.99 | 110.50 | 164.76 | 19.99 | 119.52 | 197.96 | 56 |
| 15250A | 159.32 | 111.00 | 160.49 | 20.16 | 115.06 | 197.96 | 79 |
| 15237ASUB1 | 24.00 | 28.60 | 24.02 | 5.21 | 10.78 | 30.84 | 46 |

LC: OC RCC: MABPAB QUARTER: 4 DATE: 13-JUN-89 TIME: 11:58:31 REPORT: SUMS

PROCESS TIMES SUMMARY

| ITEM | HISTOR. FLOW HOURS | SIMULATED FLOW HOURS | WAITING FOR RESOURCES HOURS | % | PROCESSING FLOW HOURS | % | BACKSHOP HOURS | % | NUMBER OF SAMPLES |
|---|---|---|---|---|---|---|---|---|---|
| 150113A | 864.0 | 735.5 | 51.5 | 7.0% | 492.1 | 66.9% | 192.0 | 26.1% | 219 |
| 150025A | 864.0 | 801.7 | 255.1 | 31.8% | 395.4 | 49.3% | 151.2 | 18.9% | 213 |
| 150119A | 432.0 | 1094.7 | 687.7 | 62.8% | 311.0 | 28.4% | 96.0 | 8.8% | 200 |
| 150321A | 456.0 | 1159.6 | 767.4 | 66.2% | 296.3 | 25.5% | 96.0 | 8.3% | 183 |
| 150126A | 432.0 | 615.9 | 367.1 | 59.6% | 152.8 | 24.8% | 96.0 | 15.6% | 282 |
| 150300A | 456.0 | 630.2 | 375.9 | 59.6% | 158.3 | 25.1% | 96.0 | 15.2% | 297 |
| 151136A | 504.0 | 397.6 | 18.6 | 4.7% | 211.0 | 53.1% | 168.0 | 42.2% | 356 |
| 151137A | 504.0 | 368.1 | 20.5 | 5.6% | 179.6 | 48.8% | 168.0 | 45.6% | 328 |
| 151140A | 504.0 | 400.1 | 8.5 | 2.1% | 295.7 | 73.9% | 96.0 | 24.0% | 173 |
| 151150A | 744.0 | 677.4 | 149.9 | 22.1% | 377.5 | 55.7% | 150.1 | 22.2% | 226 |
| 151175A | 528.0 | 765.6 | 314.5 | 41.1% | 306.1 | 40.0% | 145.0 | 18.9% | 187 |
| 151178A | 456.0 | 387.2 | 29.1 | 7.5% | 166.2 | 42.9% | 192.0 | 49.6% | 291 |
| 151188A | | ** NO VALUES RECORDED ** | | | | | | | |
| 151189A | 840.0 | 770.5 | 18.6 | 2.4% | 586.4 | 76.1% | 165.6 | 21.5% | 30 |
| 151188ASUB1 | | ** NO VALUES RECORDED ** | | | | | | | |
| 151189ASUB1 | 0.0 | 220.5 | 8.7 | 3.9% | 115.8 | 52.5% | 96.0 | 43.5% | 28 |
| 151191A | 864.0 | 755.9 | 32.9 | 4.4% | 551.4 | 72.9% | 171.6 | 22.7% | 27 |
| 151192A | 892.0 | 762.2 | 17.3 | 2.3% | 584.5 | 76.7% | 160.4 | 21.0% | 19 |
| 151191ASUB1 | 0.0 | 221.8 | 3.6 | 1.6% | 98.2 | 44.3% | 120.0 | 54.1% | 25 |
| 151192ASUB1 | 0.0 | 230.4 | 4.3 | 1.8% | 106.1 | 46.1% | 120.0 | 52.1% | 18 |
| 152236A | 840.0 | 632.2 | 7.1 | 1.1% | 344.1 | 54.4% | 281.1 | 44.5% | 45 |
| 152237A | | ** NO VALUES RECORDED ** | | | | | | | |
| 152249A | 984.0 | 2360.8 | 1657.4 | 70.2% | 583.4 | 24.7% | 120.0 | 5.1% | 91 |
| 152230A | 984.0 | 2376.5 | 1657.5 | 69.7% | 599.1 | 25.2% | 120.0 | 5.0% | 110 |
| 152237ASUB1 | 0.0 | 188.1 | 0.1 | 0.0% | 140.0 | 74.5% | 48.0 | 25.5% | 46 |

PROCESS TIMES SUMMARY

| ITEM | HISTOR. FLOW HOURS | SIMULATED FLOW HOURS | WAITING FOR RESOURCES HOURS | % | PROCESSING FLOW HOURS | % | BACKSHOP HOURS | % | NUMBER OF SAMPLES |
|---|---|---|---|---|---|---|---|---|---|
| 15113A | 864.0 | 660.4 | 66.4 | 10.1% | 402.0 | 60.9% | 192.0 | 29.1% | 220 |
| 15025A | 864.0 | 528.7 | 81.0 | 15.3% | 297.5 | 56.3% | 150.2 | 28.4% | 225 |
| 15119A | 432.0 | 826.1 | 484.8 | 58.7% | 245.3 | 29.7% | 96.0 | 11.6% | 259 |
| 15321A | 456.0 | 900.5 | 564.8 | 62.7% | 239.7 | 26.6% | 96.0 | 10.7% | 234 |
| 15126A | 432.0 | 275.9 | 53.0 | 19.2% | 126.9 | 46.0% | 96.0 | 34.8% | 276 |
| 15300A | 456.0 | 285.1 | 55.1 | 19.3% | 134.0 | 47.0% | 96.0 | 33.7% | 288 |
| 15136A | 504.0 | 437.2 | 92.9 | 21.3% | 176.3 | 40.3% | 168.0 | 38.4% | 353 |
| 15137A | 504.0 | 421.5 | 79.4 | 18.8% | 174.1 | 41.3% | 168.0 | 39.9% | 324 |
| 15140A | 504.0 | 360.7 | 28.3 | 7.9% | 236.3 | 65.5% | 96.0 | 26.6% | 173 |
| 15150A | 744.0 | 526.6 | 80.2 | 15.2% | 296.1 | 56.2% | 150.3 | 28.5% | 231 |
| 15175A | 528.0 | 512.1 | 121.5 | 23.7% | 245.9 | 48.0% | 145.0 | 28.3% | 217 |
| 15178A | 456.0 | 417.5 | 79.3 | 19.0% | 146.2 | 35.0% | 192.0 | 46.0% | 293 |
| 15188A | | ** NO VALUES RECORDED ** | | | | | | | |
| 15189A | 840.0 | 697.5 | 65.3 | 9.4% | 468.2 | 67.1% | 164.0 | 23.5% | 30 |
| 15188ASUB1 | | ** NO VALUES RECORDED ** | | | | | | | |
| 15189ASUB1 | 0.0 | 228.7 | 29.6 | 12.9% | 103.1 | 45.1% | 96.0 | 42.0% | 28 |
| 15191A | 864.0 | 660.6 | 67.0 | 10.1% | 424.7 | 64.3% | 168.9 | 25.6% | 26 |
| 15192A | 892.0 | 692.4 | 64.4 | 9.3% | 468.8 | 67.7% | 159.2 | 23.0% | 19 |
| 15191ASUB1 | 0.0 | 234.4 | 36.7 | 15.7% | 77.7 | 33.2% | 120.0 | 51.2% | 26 |
| 15192ASUB1 | 0.0 | 230.6 | 36.9 | 16.0% | 73.7 | 31.9% | 120.0 | 52.0% | 18 |
| 15236A | 840.0 | 623.6 | 76.5 | 12.3% | 271.0 | 43.5% | 276.0 | 44.3% | 44 |
| 15237A | | ** NO VALUES RECORDED ** | | | | | | | |
| 15249A | 984.0 | 1842.6 | 1258.2 | 68.3% | 464.5 | 25.2% | 120.0 | 6.5% | 121 |
| 15250A | 984.0 | 1805.1 | 1219.1 | 67.5% | 466.0 | 25.8% | 120.0 | 6.6% | 158 |
| 15237ASUB1 | 0.0 | 157.4 | 11.5 | 7.3% | 97.9 | 62.2% | 48.0 | 30.5% | 46 |

ACC: OC RCC: MABPAB QUARTER: 4 DATE: 14-JUN-89 TIME: 05:49:17 REPT.ID: SURGE #5 PAGE: 1

PROCESS TIMES SUMMARY

| ITEM | HISTOR. FLOW HOURS | SIMULATED FLOW HOURS | WAITING FOR RESOURCES HOURS | % | PROCESSING FLOW HOURS | % | BACKSHOP HOURS | % | NUMBER OF SAMPLES |
|---|---|---|---|---|---|---|---|---|---|
| 15113A | 864.0 | 484.8 | 9.7 | 2.0% | 283.1 | 58.4% | 192.0 | 39.6% | 218 |
| 15025A | 864.0 | 398.4 | 28.4 | 7.1% | 220.2 | 55.3% | 149.8 | 37.6% | 222 |
| 15119A | 432.0 | 963.4 | 681.6 | 70.7% | 185.9 | 19.3% | 96.0 | 10.0% | 213 |
| 15321A | 456.0 | 1504.1 | 1234.8 | 82.1% | 173.3 | 11.5% | 96.0 | 6.4% | 144 |
| 15126A | 432.0 | 236.1 | 36.7 | 15.6% | 103.4 | 43.8% | 96.0 | 40.7% | 277 |
| 15300A | 456.0 | 250.1 | 46.2 | 18.5% | 107.9 | 43.2% | 96.0 | 38.4% | 286 |
| 15136A | 504.0 | 344.4 | 22.3 | 6.5% | 154.1 | 44.7% | 168.0 | 48.8% | 354 |
| 15137A | 504.0 | 315.0 | 19.4 | 6.2% | 127.6 | 40.5% | 168.0 | 53.3% | 324 |
| 15140A | 504.0 | 334.5 | 66.6 | 19.9% | 171.9 | 51.4% | 96.0 | 28.7% | 174 |
| 15150A | 744.0 | 382.4 | 15.1 | 3.9% | 216.3 | 56.6% | 151.0 | 39.5% | 243 |
| 15175A | 528.0 | 482.4 | 137.0 | 28.4% | 200.4 | 41.5% | 145.0 | 30.1% | 213 |
| 15178A | 456.0 | 312.6 | 3.1 | 1.0% | 117.6 | 37.6% | 192.0 | 61.4% | 288 |
| 15188A | | ** NO VALUES RECORDED ** | | | | | | | |
| 15189A | 840.0 | 538.2 | 24.7 | 4.6% | 349.6 | 65.0% | 163.9 | 30.4% | 29 |
| 15188ASUB1 | | ** NO VALUES RECORDED ** | | | | | | | |
| 15189ASUB1 | 0.0 | 181.3 | 4.1 | 2.3% | 81.2 | 44.8% | 96.0 | 53.0% | 30 |
| 15191A | 864.0 | 506.7 | 10.1 | 2.0% | 324.5 | 64.1% | 172.0 | 33.9% | 26 |
| 15192A | 892.0 | 531.8 | 21.8 | 4.1% | 344.6 | 64.8% | 165.5 | 31.1% | 19 |
| 15191ASUB1 | 0.0 | 187.5 | 3.2 | 1.7% | 64.2 | 34.3% | 120.0 | 64.0% | 25 |
| 15192ASUB1 | 0.0 | 188.0 | 3.2 | 1.7% | 64.8 | 34.5% | 120.0 | 63.8% | 18 |
| 15236A | 840.0 | 518.2 | 12.4 | 2.4% | 232.6 | 44.9% | 273.1 | 52.7% | 45 |
| 15237A | | ** NO VALUES RECORDED ** | | | | | | | |
| 15249A | 984.0 | 1870.0 | 1421.7 | 76.0% | 328.3 | 17.6% | 120.0 | 6.4% | 116 |
| 15250A | 984.0 | 1819.1 | 1365.5 | 75.1% | 333.7 | 18.3% | 120.0 | 6.6% | 147 |
| 15237ASUB1 | 0.0 | 141.6 | 0.2 | 0.2% | 93.4 | 65.9% | 48.0 | 33.9% | 46 |

: DC RCC: MABPAB QUARTER: 4 DATE: 14-JUN-89 TIME: 06:26:24 REPT.ID: [illegible]

[illegible] TIMES SUMMARY

| ITEM | HISTOR. FLOW HOURS | SIMULATED FLOW HOURS | WAITING FOR RESOURCES HOURS | % | PROCESSING FLOW HOURS | % | BACKSHOP HOURS | % | NUMBER OF SAMPLES |
|---|---|---|---|---|---|---|---|---|---|
| 15113A | 864.0 | 481.1 | 9.2 | 1.9% | 279.9 | 58.2% | 192.0 | 39.9% | 219 |
| 15025A | 864.0 | 380.1 | 10.0 | 2.6% | 218.2 | 57.4% | 151.9 | 40.0% | 222 |
| 15119A | 432.0 | 802.4 | 528.1 | 65.8% | 178.3 | 22.2% | 96.0 | 12.0% | 259 |
| 15321A | 456.0 | 782.0 | 512.9 | 65.6% | 173.1 | 22.1% | 96.0 | 12.3% | 256 |
| 15126A | 432.0 | 202.7 | 7.0 | 3.4% | 99.7 | 49.2% | 96.0 | 47.4% | 277 |
| 15300A | 456.0 | 209.7 | 10.9 | 5.2% | 102.9 | 49.0% | 96.0 | 45.8% | 286 |
| 15136A | 504.0 | 323.7 | 3.0 | 0.9% | 152.8 | 47.2% | 168.0 | 51.9% | 354 |
| 15137A | 504.0 | 299.3 | 4.1 | 1.4% | 127.2 | 42.5% | 168.0 | 56.1% | 325 |
| 15140A | 504.0 | 274.7 | 6.4 | 2.3% | 172.2 | 62.7% | 96.0 | 35.0% | 176 |
| 15150A | 744.0 | 374.6 | 9.4 | 2.5% | 215.9 | 57.6% | 149.3 | 39.9% | 243 |
| 15175A | 528.0 | 405.4 | 59.8 | 14.8% | 200.6 | 49.5% | 145.0 | 35.8% | 232 |
| 15178A | 456.0 | 312.4 | 2.4 | 0.8% | 118.0 | 37.8% | 192.0 | 61.5% | 287 |
| 15188A | | ** NO VALUES RECORDED ** | | | | | | | |
| 15189A | 840.0 | 512.5 | 2.6 | 0.5% | 346.0 | 67.5% | 163.9 | 32.0% | 29 |
| 15188ASUB1 | | ** NO VALUES RECORDED ** | | | | | | | |
| 15189ASUB1 | 0.0 | 183.6 | 1.8 | 1.0% | 85.7 | 46.7% | 96.0 | 52.3% | 31 |
| 15191A | 864.0 | 485.9 | 3.0 | 0.6% | 307.3 | 63.2% | 175.7 | 36.2% | 27 |
| 15192A | 892.0 | 507.5 | 1.9 | 0.4% | 343.9 | 67.8% | 161.7 | 31.9% | 19 |
| 15191ASUB1 | 0.0 | 176.9 | 2.1 | 1.2% | 54.8 | 31.0% | 120.0 | 67.8% | 25 |
| 15192ASUB1 | 0.0 | 185.8 | 2.4 | 1.3% | 63.4 | 34.1% | 120.0 | 64.6% | 18 |
| 15236A | 840.0 | 518.7 | 2.5 | 0.5% | 234.8 | 45.3% | 281.1 | 54.2% | 45 |
| 15237A | | ** NO VALUES RECORDED ** | | | | | | | |
| 15249A | 984.0 | 1480.5 | 1034.8 | 69.9% | 325.7 | 22.0% | 120.0 | 8.1% | 143 |
| 15250A | 984.0 | 1487.9 | 1040.4 | 69.9% | 327.5 | 22.0% | 120.0 | 8.1% | 179 |
| 15237ASUB1 | 0.0 | 144.6 | 0.0 | 0.0% | 96.5 | 66.8% | 48.0 | 33.2% | 46 |

## PROCESS TIMES SUMMARY

| ITEM | HISTOR. FLOW HOURS | SIMULATED FLOW HOURS | WAITING FOR RESOURCES HOURS | % | PROCESSING FLOW HOURS | % | BACKSHOP HOURS | % | NUMBER OF SAMPLES |
|---|---|---|---|---|---|---|---|---|---|
| 15113A | 864.0 | 534.1 | 57.3 | 10.7% | 284.8 | 53.3% | 192.0 | 35.9% | 219 |
| 15025A | 864.0 | 424.6 | 61.8 | 14.6% | 211.9 | 49.9% | 150.8 | 35.5% | 222 |
| 15119A | 432.0 | 759.5 | 480.7 | 63.3% | 182.8 | 24.1% | 96.0 | 12.6% | 276 |
| 15321A | 456.0 | 1002.4 | 729.8 | 72.8% | 176.6 | 17.6% | 96.0 | 9.6% | 210 |
| 15126A | 432.0 | 257.9 | 59.8 | 23.2% | 102.1 | 39.6% | 96.0 | 37.2% | 275 |
| 15300A | 456.0 | 265.7 | 64.6 | 24.3% | 105.1 | 39.5% | 96.0 | 36.1% | 288 |
| 15136A | 504.0 | 430.8 | 104.9 | 24.4% | 157.8 | 36.6% | 168.0 | 39.0% | 358 |
| 15137A | 504.0 | 407.4 | 99.0 | 24.3% | 140.4 | 34.5% | 168.0 | 41.2% | 330 |
| 15140A | 504.0 | 296.0 | 36.4 | 12.3% | 163.5 | 55.3% | 96.0 | 32.4% | 174 |
| 15150A | 744.0 | 422.2 | 52.3 | 12.4% | 217.8 | 51.6% | 152.1 | 36.0% | 240 |
| 15175A | 528.0 | 445.8 | 105.0 | 23.5% | 195.8 | 43.9% | 145.0 | 32.5% | 231 |
| 15178A | 456.0 | 351.4 | 36.0 | 10.2% | 123.4 | 35.1% | 192.0 | 54.6% | 290 |
| 15188A | | ** NO VALUES RECORDED ** | | | | | | | |
| 15189A | 840.0 | 583.7 | 74.4 | 12.7% | 347.1 | 59.5% | 162.2 | 27.8% | 29 |
| 15188ASUB1 | | ** NO VALUES RECORDED ** | | | | | | | |
| 15189ASUB1 | 0.0 | 202.7 | 27.2 | 13.4% | 79.5 | 39.2% | 96.0 | 47.4% | 28 |
| 15191A | 864.0 | 582.6 | 79.1 | 13.6% | 325.7 | 55.9% | 177.8 | 30.5% | 26 |
| 15192A | 892.0 | 618.1 | 111.1 | 18.0% | 344.0 | 55.7% | 162.9 | 26.4% | 19 |
| 15191ASUB1 | 0.0 | 220.9 | 37.5 | 17.0% | 63.4 | 28.7% | 120.0 | 54.3% | 25 |
| 15192ASUB1 | 0.0 | 210.3 | 35.9 | 17.1% | 54.3 | 25.8% | 120.0 | 57.1% | 19 |
| 15236A | 840.0 | 587.6 | 75.1 | 12.8% | 238.3 | 40.6% | 274.1 | 46.7% | 45 |
| 15237A | | ** NO VALUES RECORDED ** | | | | | | | |
| 15249A | 984.0 | 1520.2 | 1072.6 | 70.6% | 327.6 | 21.6% | 120.0 | 7.9% | 147 |
| 15250A | 984.0 | 1434.0 | 988.3 | 68.9% | 326.8 | 22.8% | 120.0 | 8.3% | 196 |
| 15237ASUB1 | 0.0 | 142.9 | 12.7 | 8.9% | 82.1 | 57.5% | 48.0 | 33.6% | 46 |

## PROCESS TIMES SUMMARY

| ITEM | HISTOR. FLOW HOURS | SIMULATED FLOW HOURS | WAITING FOR RESOURCES HOURS | WAITING FOR RESOURCES % | PROCESSING FLOW HOURS | PROCESSING FLOW % | BACKSHOP HOURS | BACKSHOP % | NUMBER OF SAMPLES |
|---|---|---|---|---|---|---|---|---|---|
| 15113A | 864.0 | 420.2 | 10.5 | 2.5% | 217.7 | 51.8% | 192.0 | 45.7% | 217 |
| 15025A | 864.0 | 347.2 | 26.0 | 7.5% | 171.6 | 49.4% | 149.5 | 43.1% | 222 |
| 15119A | 432.0 | 258.5 | 23.7 | 9.2% | 138.8 | 53.7% | 96.0 | 37.1% | 274 |
| 15321A | 456.0 | 267.1 | 33.9 | 12.7% | 137.3 | 51.4% | 96.0 | 35.9% | 248 |
| 15126A | 432.0 | 209.6 | 23.5 | 11.2% | 90.1 | 43.0% | 96.0 | 45.8% | 277 |
| 15300A | 456.0 | 217.3 | 27.5 | 12.7% | 93.8 | 43.2% | 96.0 | 44.2% | 286 |
| 15136A | 504.0 | 326.8 | 21.6 | 6.6% | 137.2 | 42.0% | 168.0 | 51.4% | 355 |
| 15137A | 504.0 | 296.5 | 16.6 | 5.6% | 111.9 | 37.7% | 168.0 | 56.7% | 326 |
| 15140A | 504.0 | 235.4 | 5.4 | 2.3% | 134.0 | 56.9% | 96.0 | 40.8% | 177 |
| 15150A | 744.0 | 346.0 | 23.9 | 6.9% | 172.0 | 49.7% | 150.1 | 43.4% | 245 |
| 15175A | 528.0 | 328.6 | 15.2 | 4.6% | 168.5 | 51.3% | 145.0 | 44.1% | 248 |
| 15178A | 456.0 | 301.2 | 3.6 | 1.2% | 105.6 | 35.1% | 192.0 | 63.7% | 287 |
| 15188A | | ** NO VALUES RECORDED ** | | | | | | | |
| 15189A | 840.0 | 508.5 | 60.1 | 11.8% | 280.5 | 55.2% | 168.0 | 33.0% | 29 |
| 15188ASUB1 | | ** NO VALUES RECORDED ** | | | | | | | |
| 15189ASUB1 | 0.0 | 190.5 | 14.8 | 7.8% | 79.6 | 41.8% | 96.0 | 50.4% | 31 |
| 15191A | 864.0 | 458.6 | 49.6 | 10.8% | 242.6 | 52.9% | 166.5 | 36.3% | 26 |
| 15192A | 892.0 | 510.3 | 71.0 | 13.9% | 279.0 | 54.7% | 160.4 | 31.4% | 19 |
| 15191ASUB1 | 0.0 | 191.0 | 18.9 | 9.9% | 52.1 | 27.3% | 120.0 | 62.8% | 25 |
| 15192ASUB1 | 0.0 | 181.2 | 11.8 | 6.5% | 49.4 | 27.2% | 120.0 | 66.2% | 18 |
| 15236A | 840.0 | 498.0 | 24.6 | 4.9% | 199.8 | 40.1% | 273.6 | 54.9% | 45 |
| 15237A | | ** NO VALUES RECORDED ** | | | | | | | |
| 15249A | 984.0 | 740.4 | 388.1 | 52.4% | 232.3 | 31.4% | 120.0 | 16.2% | 283 |
| 15250A | 984.0 | 710.6 | 352.1 | 49.6% | 238.5 | 33.6% | 120.0 | 16.9% | 316 |
| 15237ASUB1 | 0.0 | 129.3 | 2.2 | 1.7% | 79.1 | 61.2% | 48.0 | 37.1% | 46 |

## PROCESS TIMES SUMMARY

| ITEM | HISTOR. FLOW HOURS | SIMULATED FLOW HOURS | WAITING FOR RESOURCES HOURS | % | PROCESSING FLOW HOURS | % | BACKSHOP HOURS | % | NUMBER OF SAMPLES |
|---|---|---|---|---|---|---|---|---|---|
| 15113A | 864.0 | 407.1 | 4.2 | 1.0% | 210.8 | 51.8% | 192.0 | 47.2% | 218 |
| 15025A | 864.0 | 321.4 | 4.8 | 1.5% | 165.6 | 51.5% | 151.0 | 47.0% | 222 |
| 15119A | 432.0 | 412.3 | 180.8 | 43.9% | 135.5 | 32.9% | 96.0 | 23.3% | 279 |
| 15321A | 456.0 | 422.0 | 195.2 | 46.3% | 130.7 | 31.0% | 96.0 | 22.7% | 255 |
| 15126A | 432.0 | 187.0 | 5.2 | 2.8% | 85.9 | 45.9% | 96.0 | 51.3% | 277 |
| 15300A | 456.0 | 193.8 | 10.1 | 5.2% | 87.7 | 45.3% | 96.0 | 49.5% | 286 |
| 15136A | 504.0 | 308.4 | 3.6 | 1.2% | 136.8 | 44.4% | 168.0 | 54.5% | 355 |
| 15137A | 504.0 | 283.5 | 3.9 | 1.4% | 111.7 | 39.4% | 168.0 | 59.3% | 326 |
| 15140A | 504.0 | 246.4 | 17.2 | 7.0% | 133.2 | 54.1% | 96.0 | 39.0% | 176 |
| 15150A | 744.0 | 325.3 | 7.4 | 2.3% | 169.2 | 52.0% | 148.8 | 45.7% | 247 |
| 15175A | 528.0 | 350.9 | 38.5 | 11.0% | 167.4 | 47.7% | 145.0 | 41.3% | 242 |
| 15178A | 456.0 | 299.2 | 2.1 | 0.7% | 105.2 | 35.1% | 192.0 | 64.2% | 287 |
| 15188A | | ** NO VALUES RECORDED ** | | | | | | | |
| 15189A | 840.0 | 427.6 | 2.4 | 0.6% | 260.5 | 60.9% | 164.7 | 38.5% | 29 |
| 15188ASUB1 | | ** NO VALUES RECORDED ** | | | | | | | |
| 15189ASUB1 | 0.0 | 174.6 | 1.5 | 0.9% | 77.1 | 44.1% | 96.0 | 55.0% | 31 |
| 15191A | 864.0 | 408.8 | 2.4 | 0.6% | 233.4 | 57.1% | 172.9 | 42.3% | 26 |
| 15192A | 892.0 | 418.0 | 2.0 | 0.5% | 256.8 | 61.4% | 159.2 | 38.1% | 19 |
| 15191ASUB1 | 0.0 | 174.3 | 0.7 | 0.4% | 53.6 | 30.7% | 120.0 | 68.9% | 25 |
| 15192ASUB1 | 0.0 | 175.9 | 0.6 | 0.4% | 55.2 | 31.4% | 120.0 | 68.2% | 18 |
| 15236A | 840.0 | 486.0 | 1.9 | 0.4% | 203.2 | 41.8% | 280.9 | 57.8% | 44 |
| 15237A | | ** NO VALUES RECORDED ** | | | | | | | |
| 15249A | 984.0 | 1231.4 | 882.5 | 71.7% | 228.9 | 18.6% | 120.0 | 9.7% | 173 |
| 15250A | 984.0 | 1235.1 | 887.7 | 71.9% | 227.4 | 18.4% | 120.0 | 9.7% | 213 |
| 15237ASUB1 | 0.0 | 128.3 | 0.0 | 0.0% | 80.2 | 62.5% | 48.0 | 37.4% | 46 |

Ricardo DDB

# TABLE OF CALCULATIONS

| Omega Transform FY-90 | | |
|---|---|---|
| **Run No.** | **Thruput (%)** | **db** |
| **1** | **66.5** | **2.9778** |
| **2** | **86.4** | **8.0297** |
| **3** | **91.3** | **10.2095** |
| **4** | **94.2** | **12.1062** |
| **5** | **93.9** | **11.8734** |
| **6** | **97.0** | **15.0965** |
| **7** | **96.6** | **14.5350** |
| **8** | **99.3** | **21.5185** |
| **9** | **99.4** | **22.1924** |

**Manpower Distribution**

1st shift

$$\frac{2.9778 + 8.0297 + 10.2095}{3} = 7.0723 \quad \textit{83.6\%}$$

50%/50%

$$\frac{12.1062 + 11.8734 + 15.0965}{3} = 13.0254 \quad \textit{95.25\%}$$

3rd

$$\frac{14.5350 + 21.5185 + 22.1924}{3} = 19.4153 \quad \textit{98.87\%}$$

**Overtime**

40 hrs

$$\frac{2.9778 + 12.1062 + 21.5185}{3} = 9.873 \quad \textit{90.66\%}$$

SAT

$$\frac{8.0297 + 11.8734 + 14.535}{3} = 13.8072 \quad \textit{96.00\%}$$

SAT & SUN

$$\frac{10.2095 + 15.0965 + 22.1824}{} = 15.8328 \quad \textit{97.46\%}$$

**Equipment Base**

Base

$$\frac{2.9778 + 11.8734 + 22.1924}{3} = 12.3478 \quad 94.50\%$$

Base +

$$\frac{8.0297 + 15.0965 + 14.535}{3} = 12.5537 \quad 94.74\%$$

Base + +

$$\frac{10.209512.1062 + 21.5185}{3} = 14.6114 \quad 96.66\%$$

Average = 13.1710 *95.4031%*

Now for just 2nd shift

13.1710 + (12.3479 + 13.1710) + (9.873 - 13.1710) + (13.1710 - 13.0254) = 9.1955 *89.26%*

2nd shift + SAT

13.1710 + (13.0254 - 13.1710) + (13.8072 - 13.1710) + (13.1710 - 12.4379) = 12.8355, *95.06%*

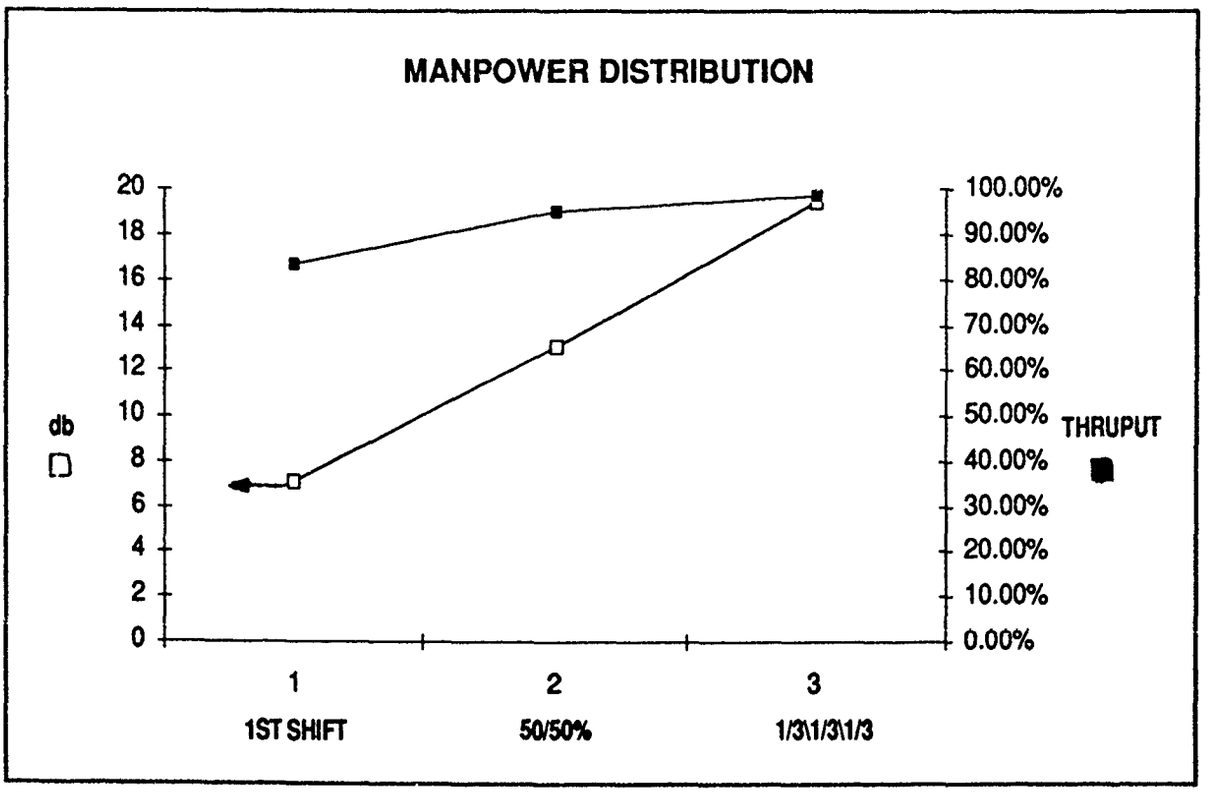

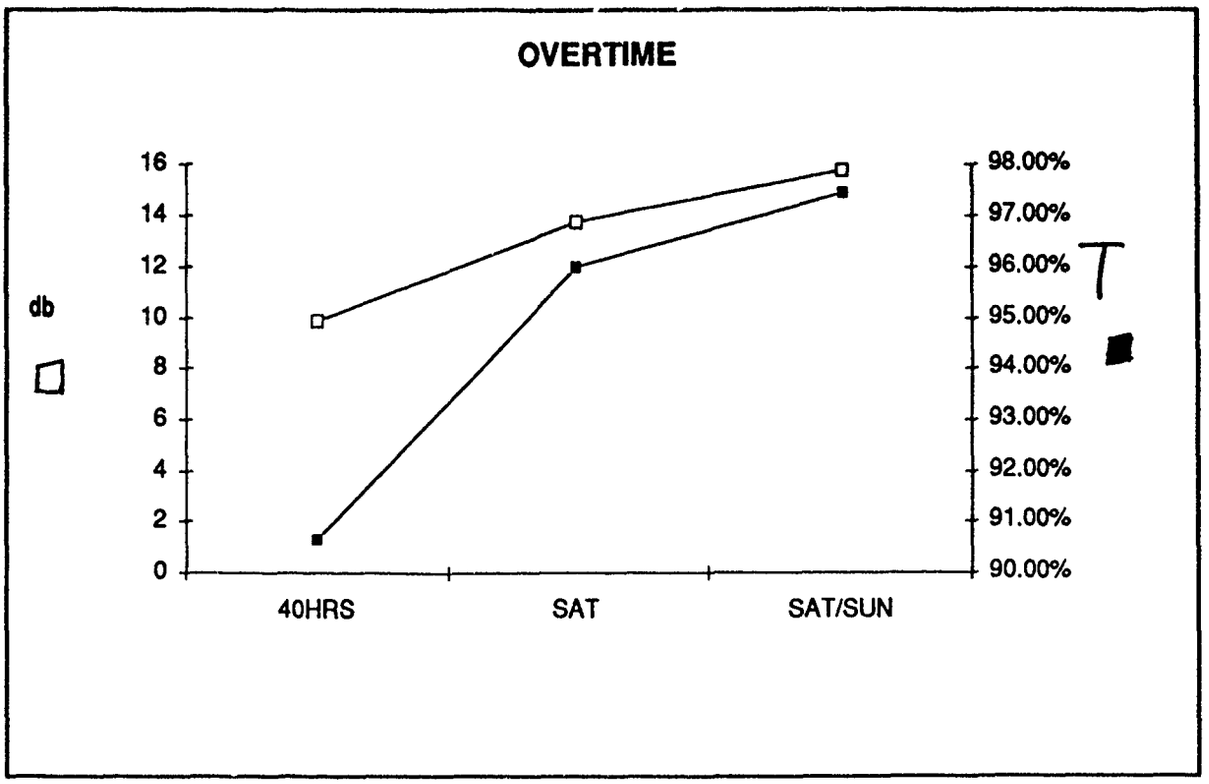
OVERTIME
db
16
14
12
10
8
6
4
2
0
98.00%
97.00%
96.00%
95.00%
94.00%
93.00%
92.00%
91.00%
90.00%
40HRS
SAT
SAT/SUN

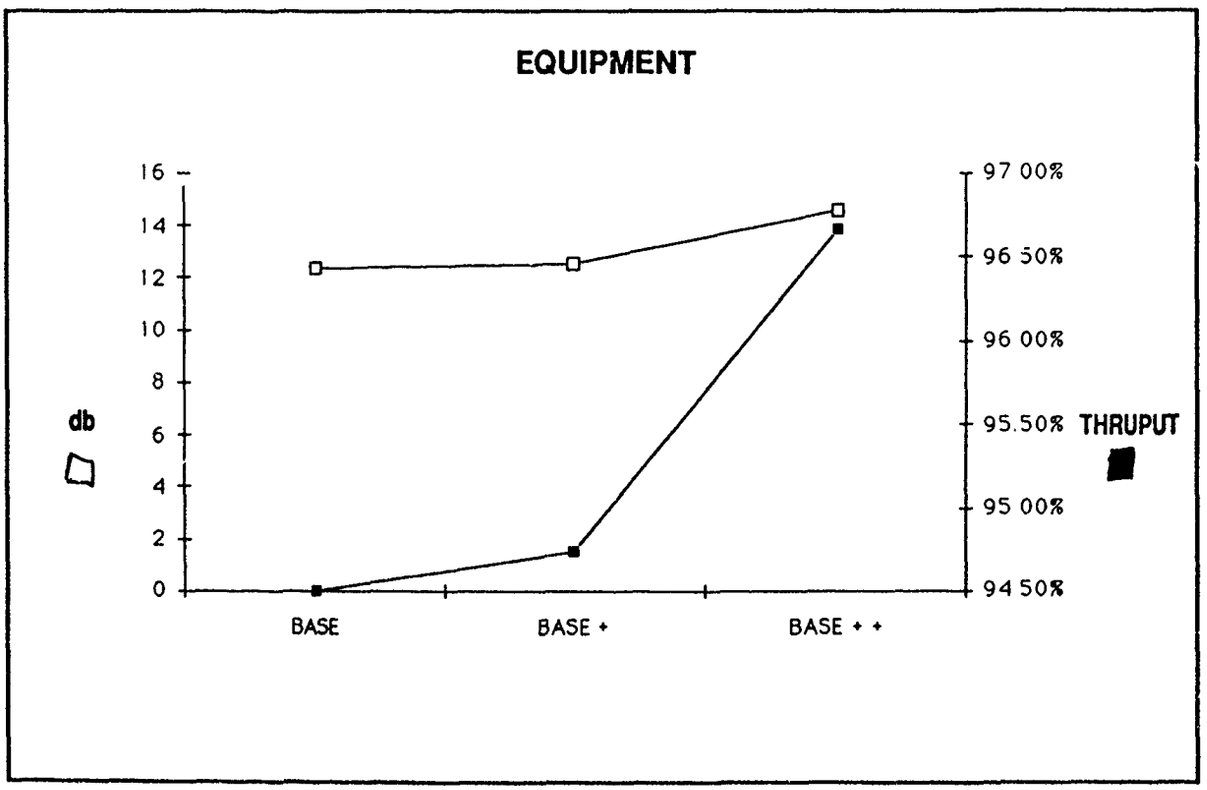
EQUIPMENT
db
16
14
12
10
8
6
4
2
0
97 00%
96 50%
96 00%
95.50%
95 00%
94 50%
THRUPUT
BASE
BASE +
BASE + +

**Omega Transform FY-90**

| Run No. | Thruput (%) | db |
|---|---|---|
| 1 | 46.8 | -0.5567 |
| 2 | 74.3 | 4.6106 |
| 3 | 82.9 | 6.8556 |
| 4 | 88.6 | 8.9053 |
| 5 | 84.9 | 7.4993 |
| 6 | 91.0 | 10.0480 |
| 7 | 91.8 | 10.4903 |
| 8 | 98.8 | 19.1558 |
| 9 | 93.3 | 11.4381 |

**Manpower Distribution**

1st shift

$$\frac{-.5567 + 4.6106 + 6.8556}{3} = 3.6365 \quad 69.79\%$$

50%/50%

$$\frac{8.9053 + 7.4993 + 10.0480}{3} = 8.8175 \quad 88.4\%$$

3rd

$$\frac{10.4903 + 19.1558 + 11.4381}{3} = 13.6947 \quad 95.9\%$$

**Overtime**

40 hrs

$$\frac{-.5567 + 8.9053 + 10.4903}{3} = 6.2796 \quad 80.9\%$$

SAT

$$\frac{4.6106 + 7.4993 + 19.1558}{3} = 10.4219 \quad 91.68\%$$

SAT & SUN

$$\frac{6.8556 + 10.0480 + 11.4381}{} = 9.4472 \quad 89.8\%$$

**Equipment Base**

Base

$$\frac{-.5567 + 7.4993 + 11.4381}{3} = 6.1269 \quad 80.39\%$$

Base +

$$\frac{4.6106 + 10.0480 + 10.4903}{3} = 8.383 \quad 87.33\%$$

Base + +

$$\frac{6.8556 + 8.9053 + 19.1558}{} = 11.6389 \quad 93.58\%$$

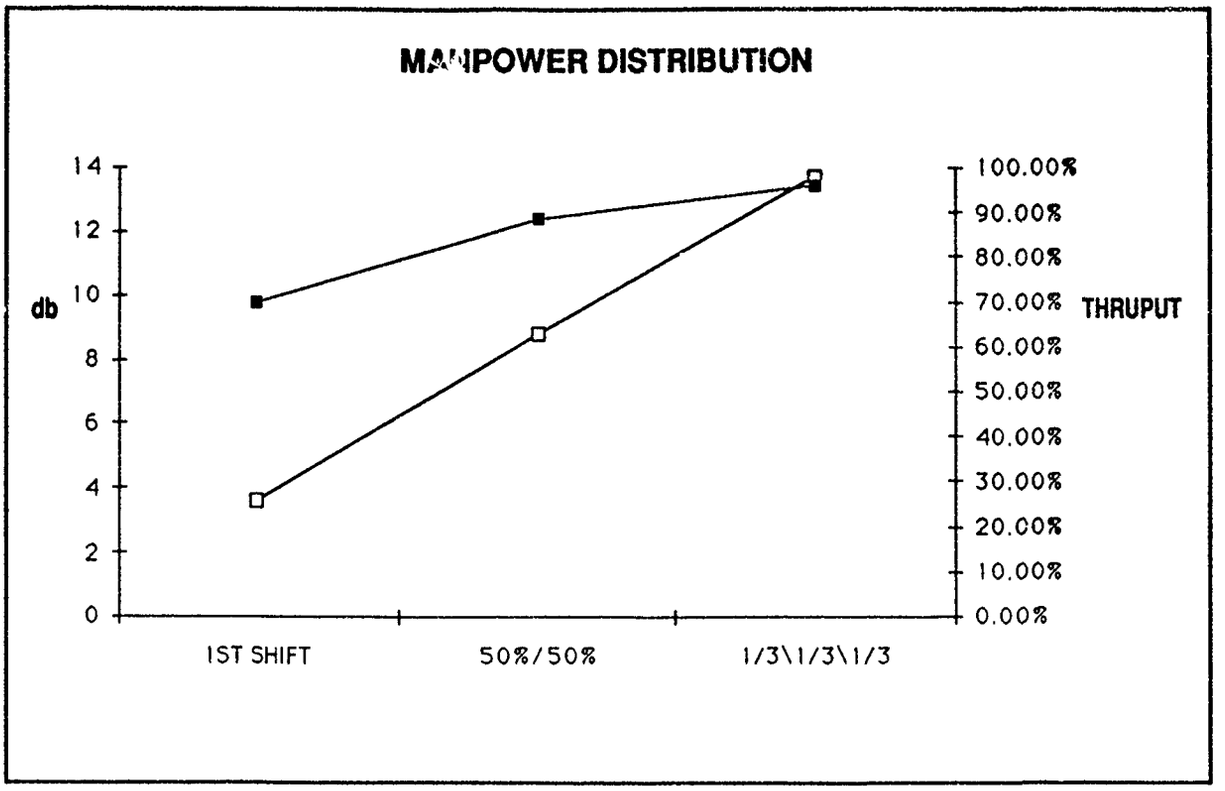
MANPOWER DISTRIBUTION
14
12
10
8
6
4
2
0
db
100.00%
90.00%
80.00%
70.00%
60.00%
50.00%
40.00%
30.00%
20.00%
10.00%
0.00%
THRUPUT
1ST SHIFT
50%/50%
1/3\1/3\1/3

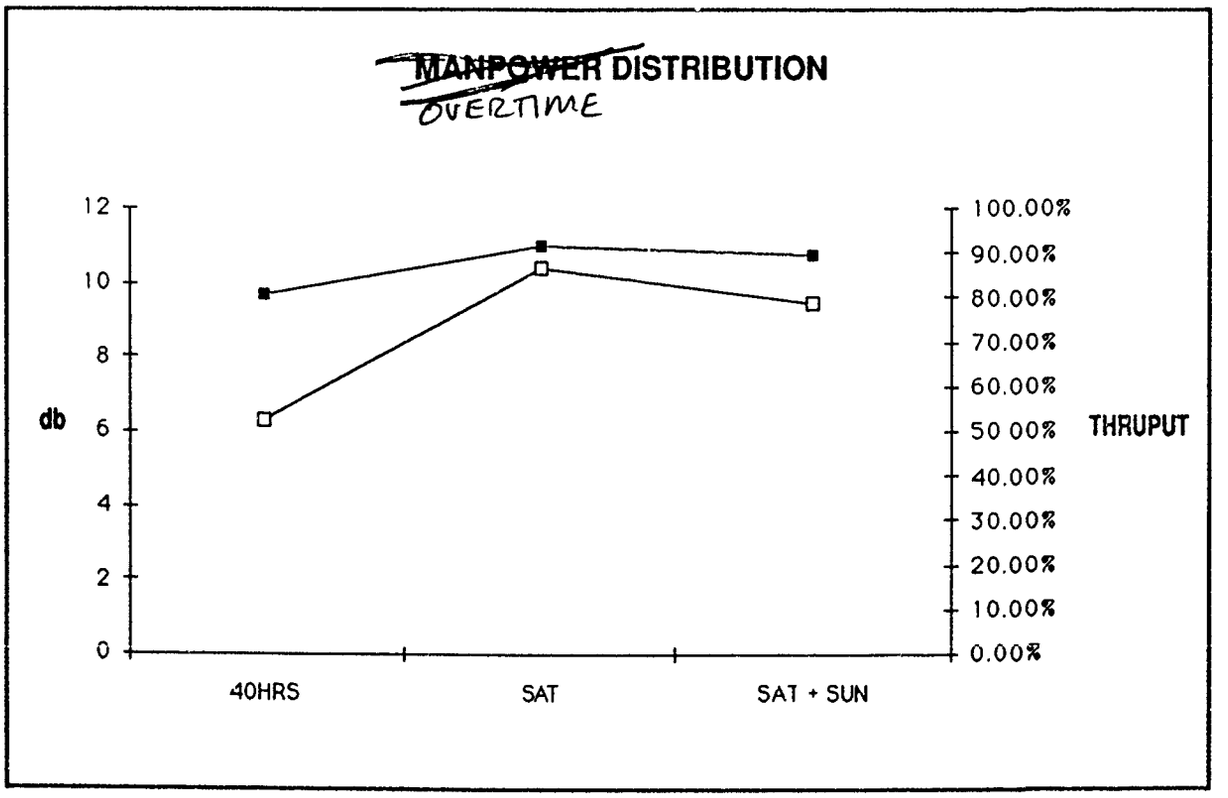
MANPOWER DISTRIBUTION
OVERTIME
12
10
8
6
4
2
0
db
100.00%
90.00%
80.00%
70.00%
60.00%
50 00%
40.00%
30.00%
20.00%
10.00%
0.00%
THRUPUT
40HRS
SAT
SAT + SUN

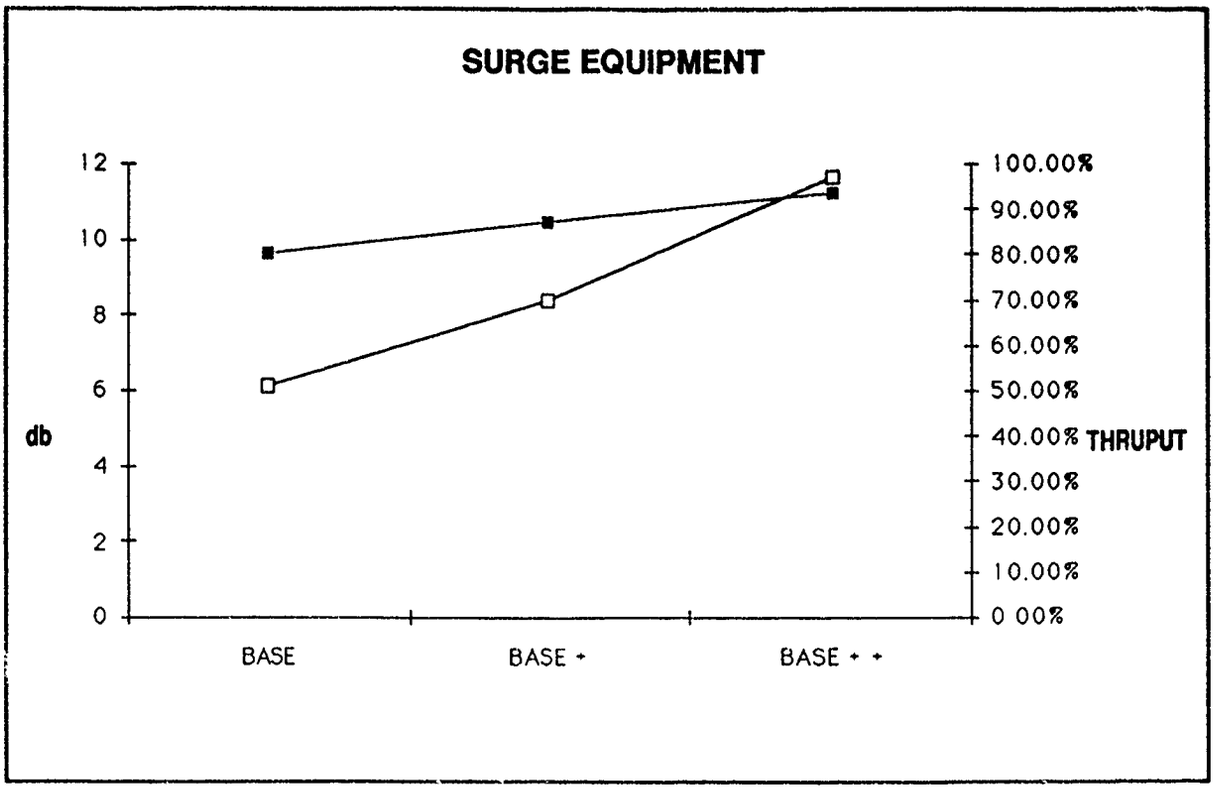


**SUMMARY:**

**"BEST " WE CAN DO IS 1/3, SAT. AND ONLY BASE BECAUSE OF SPACE LIMITATIONS**

**AVERAGE = 8.7163**

**PREDICTED = 8.8163 +{13.6947 - 8.7163} {10.4219 - 8.7163} + {6.1268 - 8.7163}**

**12.8109 ~ 95.0%**

# Experiment Data Calculation

## Flow Hours

| | 15126A | 15300A | $\overline{X}$ |
|---|---|---|---|
| 1 | 1176 | 1291 | 1233.5 |
| 2 | 271 | 288 | 279.5 |
| 3 | 257 | 268 | 262.5 |
| 4 | 263 | 272 | 267.5 |
| 5 | 203 | 203 | 202.5 |
| 6 | 201 | 205 | 203.0 |
| 7 | 221 | 234 | 227.5 |
| 8 | 188 | 190 | 189.0 |
| 9 | 185 | 187 | 186.0 |

# MABPAB Experiment Data Calculations

M.R power 1

1233.5 + 279.5 + 262.5 = 591.8

MP 2

267.5 + 202.5 + 203 = 224.3

MP 3

227.5 + 189 + 186 = 200.8

---

F 1

1233.5 + 267.5 + 227.5 = 576.2

F 2 279.5 + 202.5 + 189 = 223.7

F 3 262.5 + 203 + 186 = 217.2

---

Eq 1

1233.5 + 202.5 + 186 = 540.7

Eq 2

279.5 + 203 + 227.5 = 236.7

Eq 3

262.5 + 267.5 + 189 = 239.7

# MABPLS Experimentation Results

FY90 Workload

15126A / 15300A

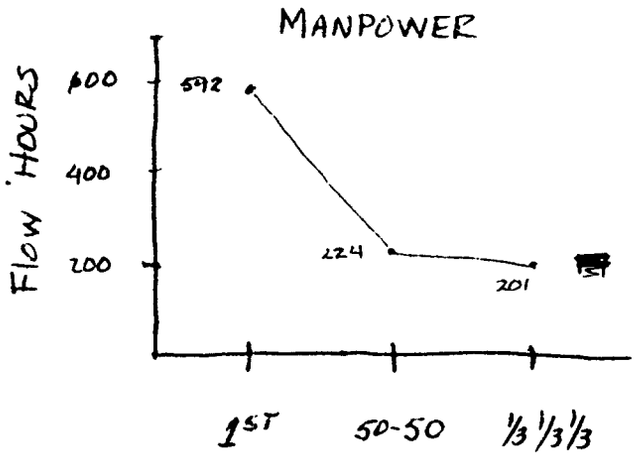


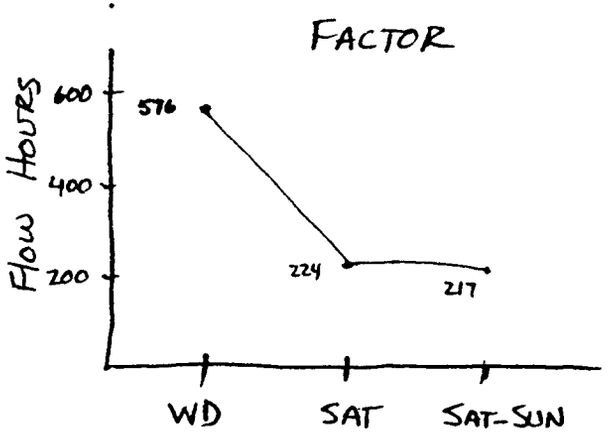


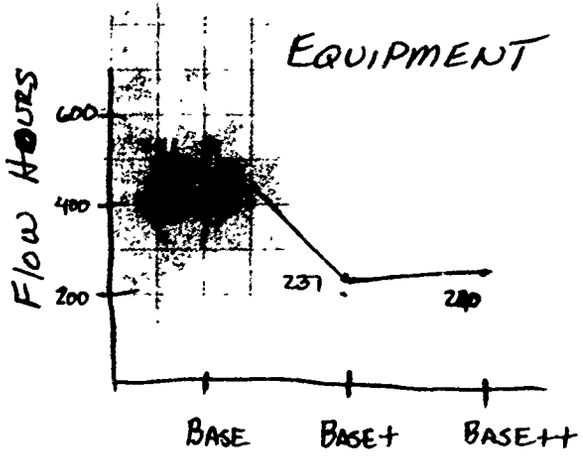

Part No. 023A FY90 (1)

Manpower Dist.

96.3% Thruput at Level 1

All Day shift

$= (824 + 567 + 560)/3 = 650.3$

Any change moves to 100%

50%/50%

$= (476 + 375 + 371)/3 = 407.3$

1/3/1/3/1/3

$= (394 + 324 + 319)/3 = 259.2$

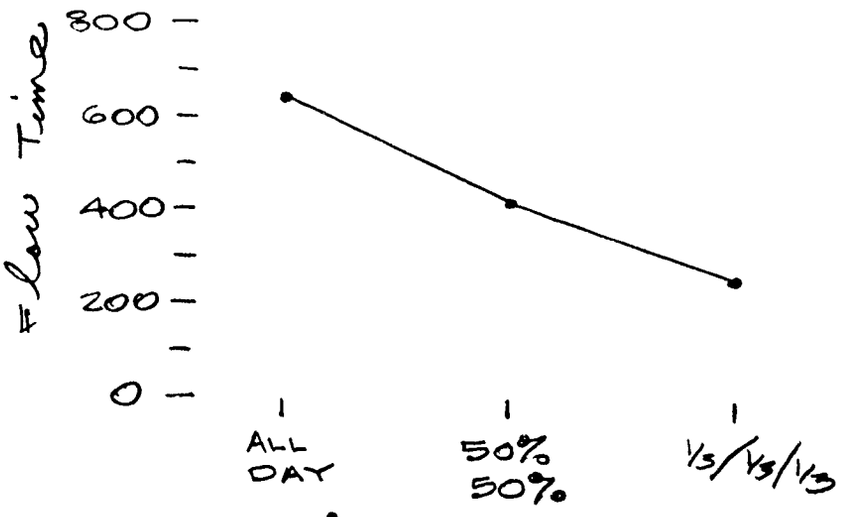


Overtime

40 hrs

$= (824 + 476 + 394)/3 = 564.7$

Sat

$= (5[redacted] + 324)/3 = 422$

Sat + Sun

$= (5[redacted] + 319)/3 = 416.7$

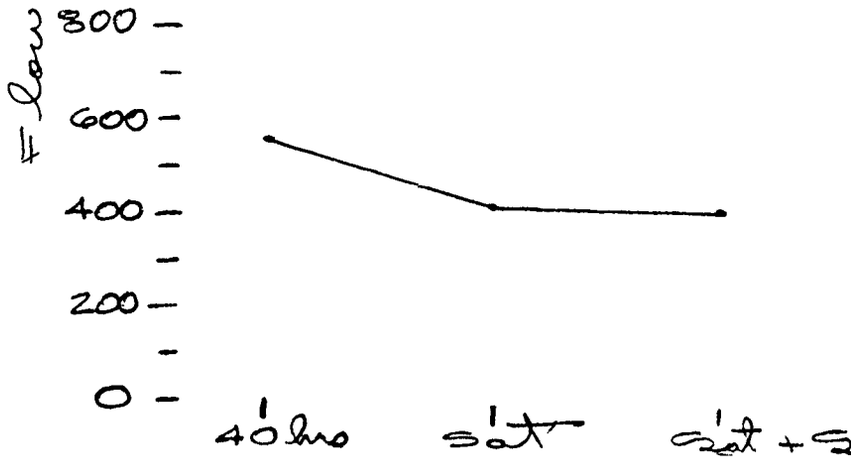

Part No. 113A FY 90 (2)

92.5% Thruput at Level 1

Manpower Dist.

All Day shift

= (995 + 699 + 695)/3 = 796.3

50%/50%

= (630 + 473 + 477)/3 = 526.7

1/3/1/3/1/3

= (515 + 408 + 406)/3 = 443

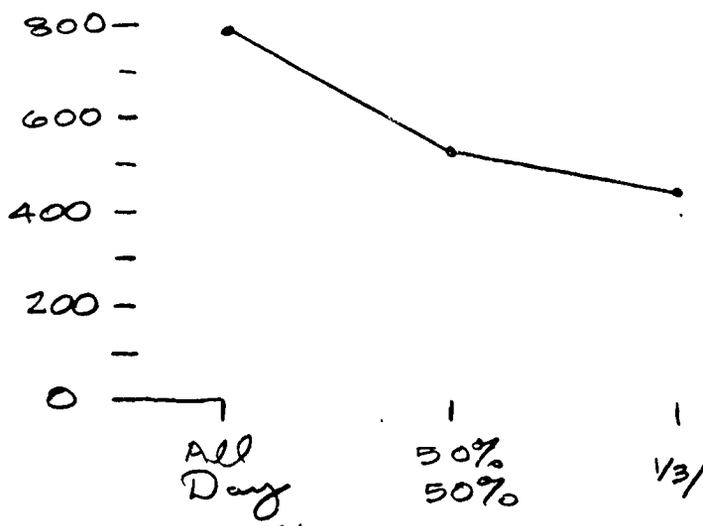


Overtime

40 hrs

= (995 + 630 + 515)/3 = 713.3

Sat.

= (629 + 473 + 515)/3 = 562.3

Sat + Sun

= (69[illegible] 477 + 406)/3 = 526.0

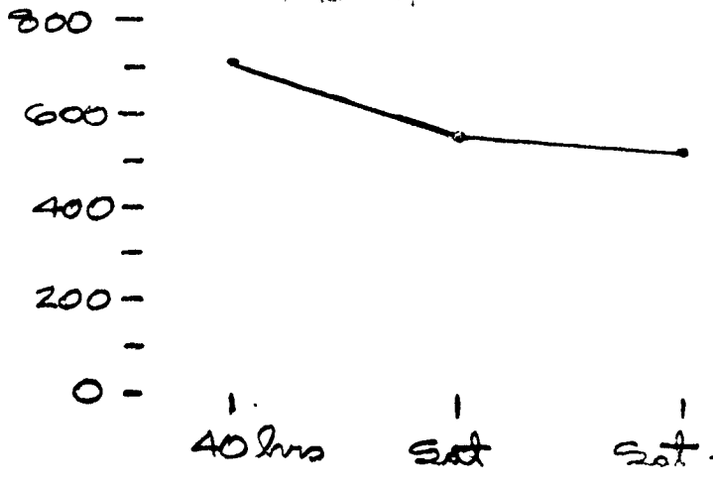

Part No. 113A FY 90

Use Omega transform on Thruput

Omega transform $= -10 \log_{10}\left(\frac{1}{P} - 1\right)$

| Run no. | Thruput (%) | Transform (db) |
|---|---|---|
| 1 | 92.5 | 10.9108 |
| 2 | 94.8 | 12.6080 |
| 3 | 94.8 | 12.6080 |
| 4 | 95.5 | 13.2679 |
| 5 | 96.3 | 14.1542 |
| 6 | 96.3 | 14.1542 |
| 7 | 97.0 | 15.0965 |
| 8 | 97.8 | 16.4792 |
| 9 | 97.0 | 15.0965 |

Manpower Dist.

All Day shift

$= (10.9108 + 12.6080 + 12.6080)/3$

$= 12.0423$

50%/50%

$= (13.2679 + 14.1542 + 14.1542)/3$

$= 13.8588$

⅓/⅓/⅓

$= (15.0965 + 16.4792 + 15.0965)/3$

$= 15.5574$

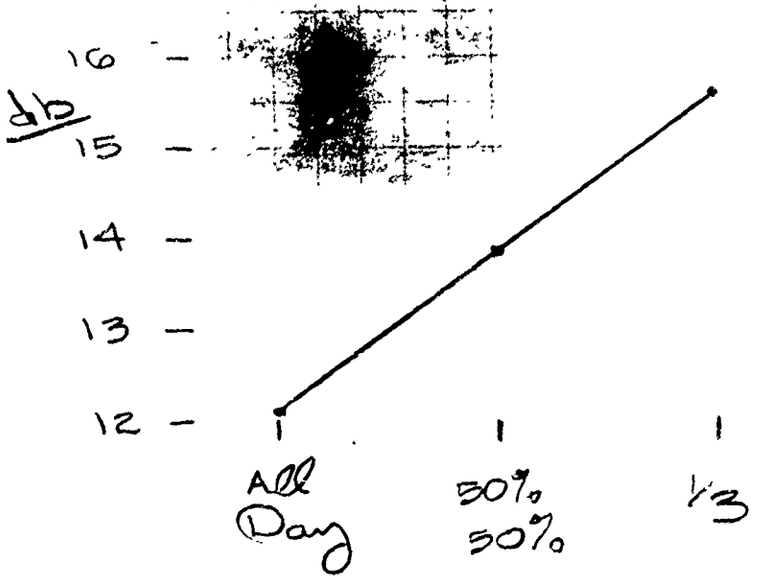

Part no. 113A FY90

Overtime

40hrs
= (10.9108 + 13.2679 + 15.0965)/3
= 13.0917

Sat.
= (12.6080 + 14.1542 + 16.4792)/3
= 14.4138

Sat + Sun
= (12.608 + 14.1542 + 15.0965)/3
= 13.9529

db
16 –
15 –
14 –
13 –
12 –

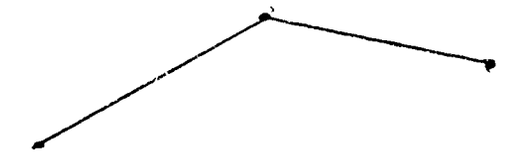

40hrs Sat. Sat +Sun

Best condition is 1/3 / 1/3 / 1/3 and Sat. which is run no. 8.

Prediction = 13.8195 + (14.4138 − 13.8195) + (15.5574 − 13.8195)
= 16.1517

which translates to 97.6% thruput. Run no. 8 provided 97.8% thruput

Part no. 119A FY90

Manpower Dist.

All Day Shift

= (1765 + 821 + 485)/3 = 1023.7

50%/50%

= (376 + 331 + 288)/3 = 331.7

1/3/1/3/1/3

= (305 + 235 + 245)/3 = 261.7

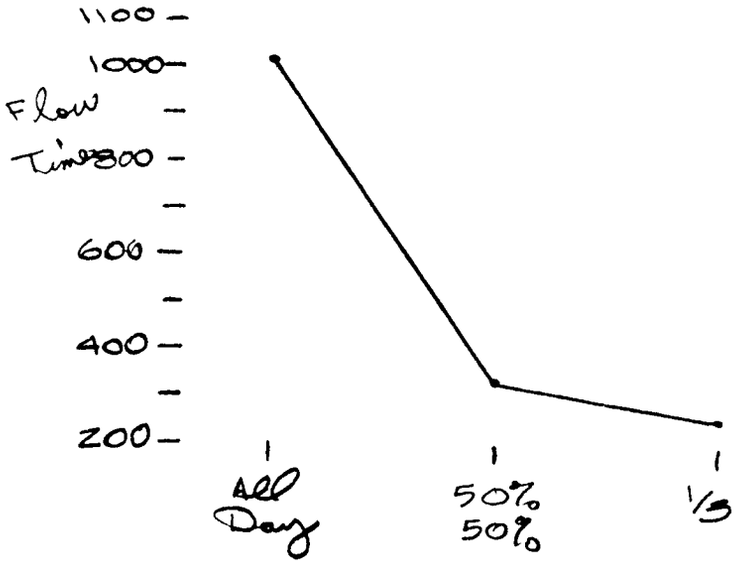


Overtime

40 hrs

= (1765 + 376 + 305)/3 = 815.3

Sat

= (821 + 331 + 235)/3 = 462.3

Sat + Sun

= (485 + 288 + 245)/3 = 339.3

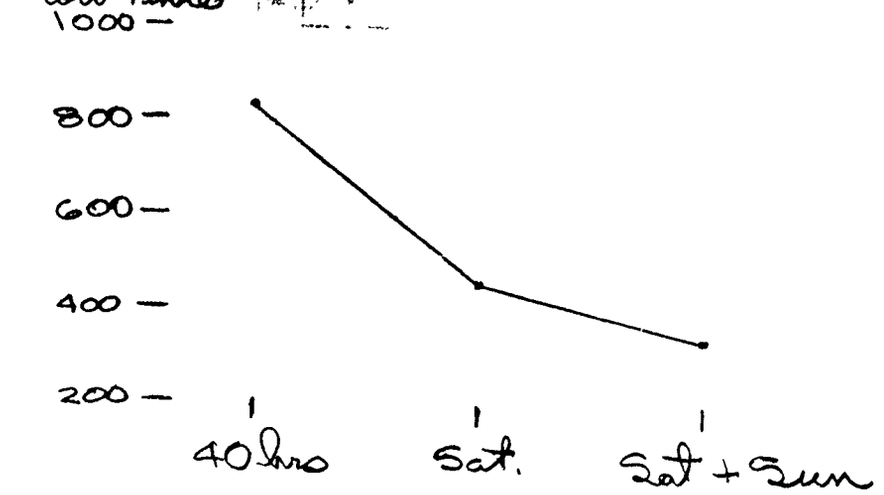

Part no. 119 A FY 90

Equip.

Base

= (176[illegible] + 331 + 245)/3 = 780.3

Base +

= (821 + 288 + 305)/3 = 471.3

Base ++

= (485 + 376 + 235)/3 = 365.3

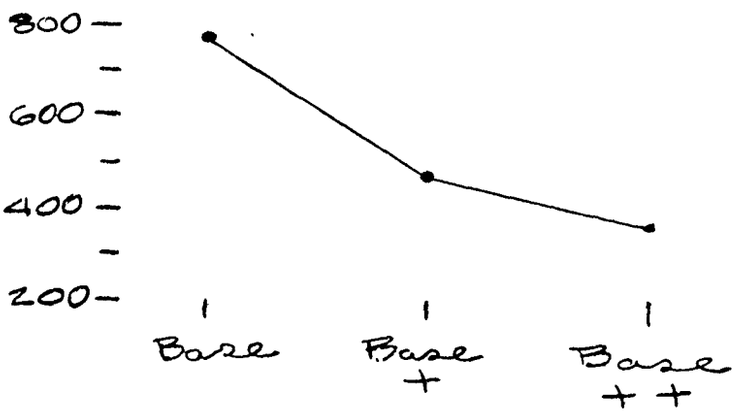


Omega Transform

| Run No. | Thruput | (db) |
|---|---|---|
| 1 | 38.2 % | -2.0892 |
| 2 | 75.3 | 4.8410 |
| 3 | 100 ≈ 99.0 | 19.9564 |
| 4 | 98.8 | 19.1558 |
| 5 | 97.6 | 16.0924 |
| 6 | 98.2 | 17.3684 |
| 7 | 97.6 | 16.0924 |
| 8 | 100 | 19.9564 |
| 9 | 100 | 19.9564 |

Manpower Dist.

All day shift

= (-2.0892 + 4.8410 + 19.9564)/3

= 7.5694

50%/50%

= (19.1558 + 16.0924 + 17.3684)/3

= 17.5389

$y_3$ = (16.0924 + 19.9564 + 19.9564)/3 = 18.6684

Part no. 119A FY90

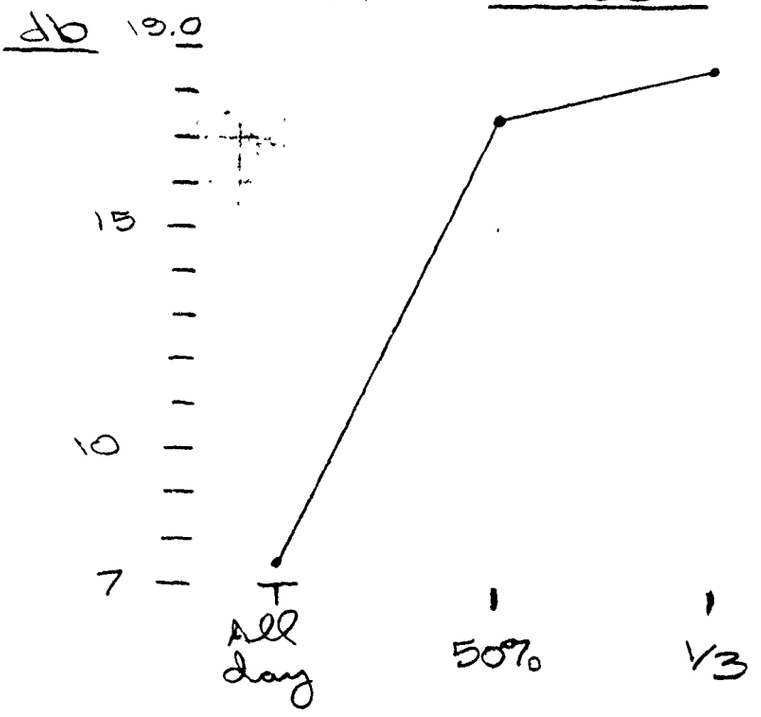


Overtime

40hrs.

$= (-2.0892 + 19.1558 + 16.0924)/3 = 11.053$

Sat.

$= (4.8410 + 16.0924 + 19.9564)/3 = 17.3143$

Sat + Sun.

$= (19.9564 + 17.3684 + 19.9564)/3 = 19.0937$

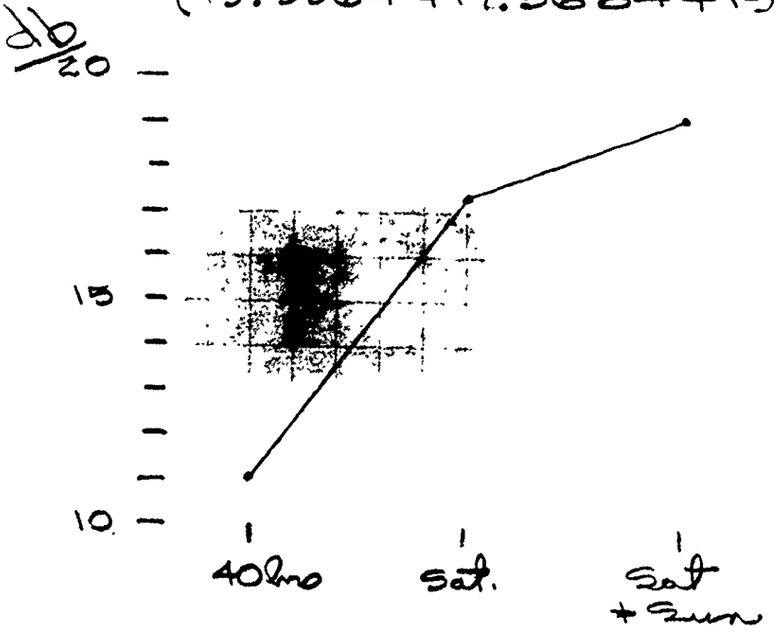

Part no. 119A FY90

Equip.

Base = (-2.0892 + 16.0924 + 19.9564)/3 = 11.3199

Base + = (14.8410 + 17.3684 + 16.0924)/3 = 12.7673

Base++ = (19.9564 + 19.1558 + 19.9564)/3 = 19.6895

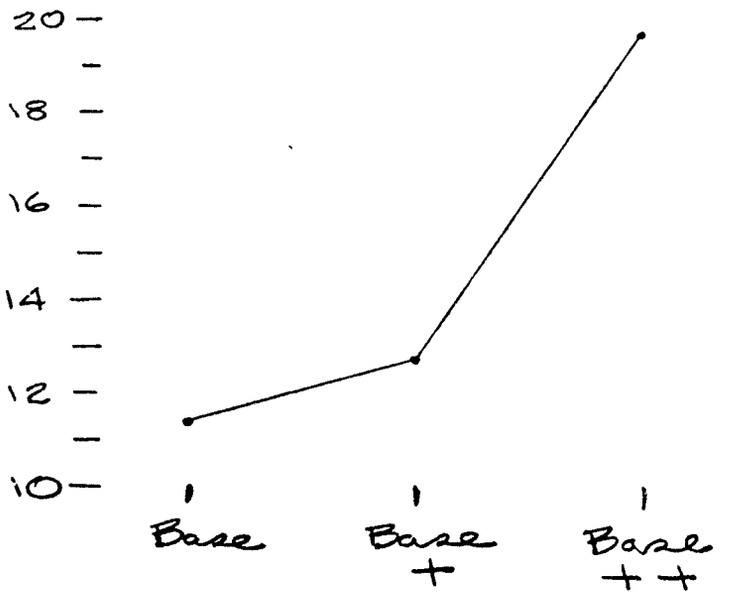


Best condition is 1/3/1/3, Sat + Sun, Base++

Prediction = 14.5922 + (19.6895 − 14.5922) + (19.0937 − 14.5922) + (18.6684 − 14.5922)

= 28.2672 which translates to 99.8% thruput

Now this best condition is too excessive, then consider 50/50, Sat., and Base++.

Prediction = 14.5922 + (19.6895 − 14.5922) + (17.3143 − 14.5922) + (17.5389 − 14.5922)

= 25.3583 which translates to 99.7% thruput

Also consider only 50% of Sat + Base++

Part No. 321A FY90

Manpower Dist.

All Day shift

=(1522+812+478)/3 = 937.3

50%/50%

=(372+328+283)/3 = 327.7

1/3/1/3/1/3

=(311+233+242)/3 = 262

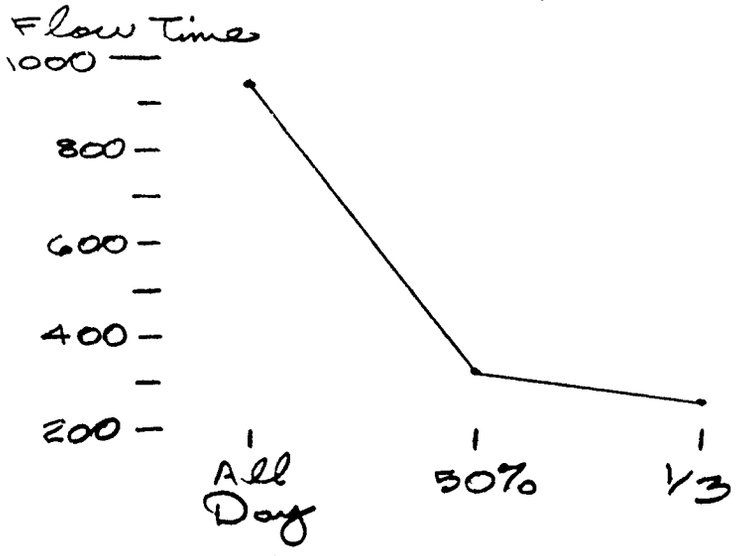


Overtime

40 hrs

=(1522+372+311)/3 = 735

Sat.

=(812+328+233)/3 = 457.7

Sat + Sun

=(478+283+242)/3 = 334.3

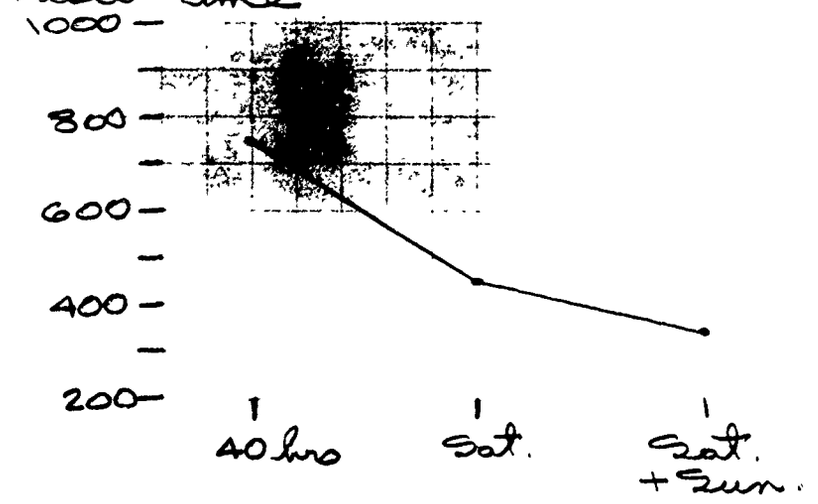

Part No. 321A FY90



Equip.

Base = (1522 + 328 + 242)/3 = 697.3

Base + = (812 + 283 + 311)/3 = 468.7

Base + + = (478 + 372 + 233)/3 = 361

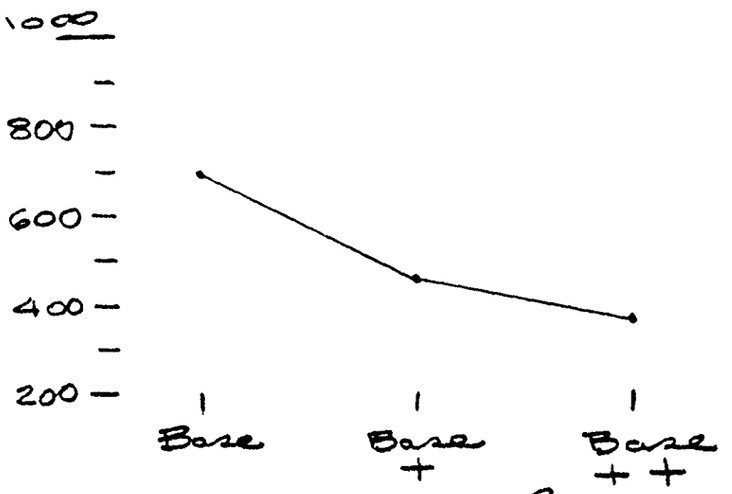


Omega Transform

| Run No. | Thruput | db |
|---|---|---|
| 1 | 46 % | -.6964 |
| 2 | 80 % | 6.0206 |
| 3 | 100 ≈ 99 | 19.9564 |
| 4 | 100 | 19.9564 |
| 5 | 100 | 19.9564 |
| 6 | 100 | 19.9564 |
| 7 | 100 | 19.9564 |
| 8 | 100 | 19.9564 |
| 9 | 100 | 19.9564 |

Manufacturing Dist.

All [redacted] Shift

= (-.6964 + 6.0206 + 19.9564)/3 = 8.4269

50%

= 19.9564

$V_3$ = 19.9564

Part No. 321A FY90



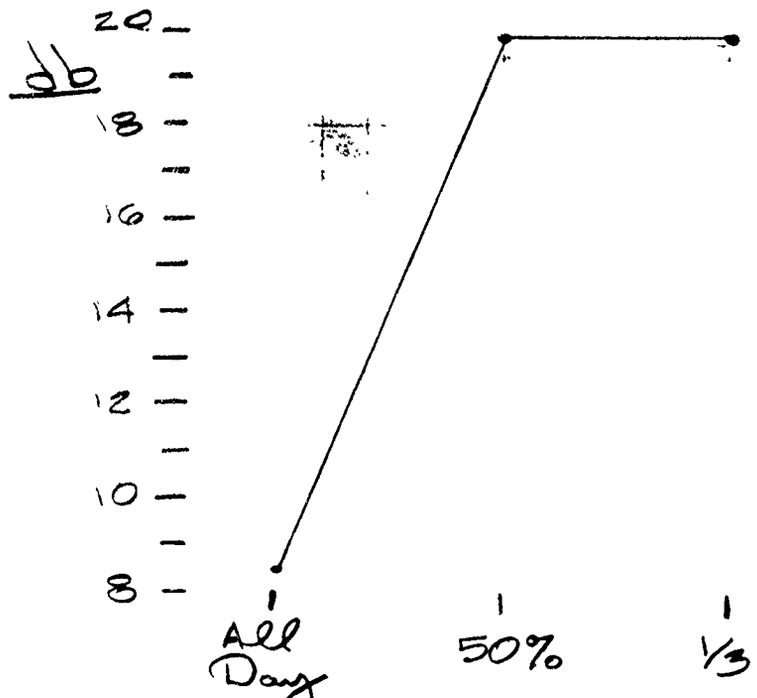


Overtime

40hrs = (-.6964 + 19.9564 + 19.9564)/3 = 13.0721

Sat. = (6.0206 + 19.9564 + 19.9564)/3 = 15.3111

Sat. + Sun = ( 19.9564 )

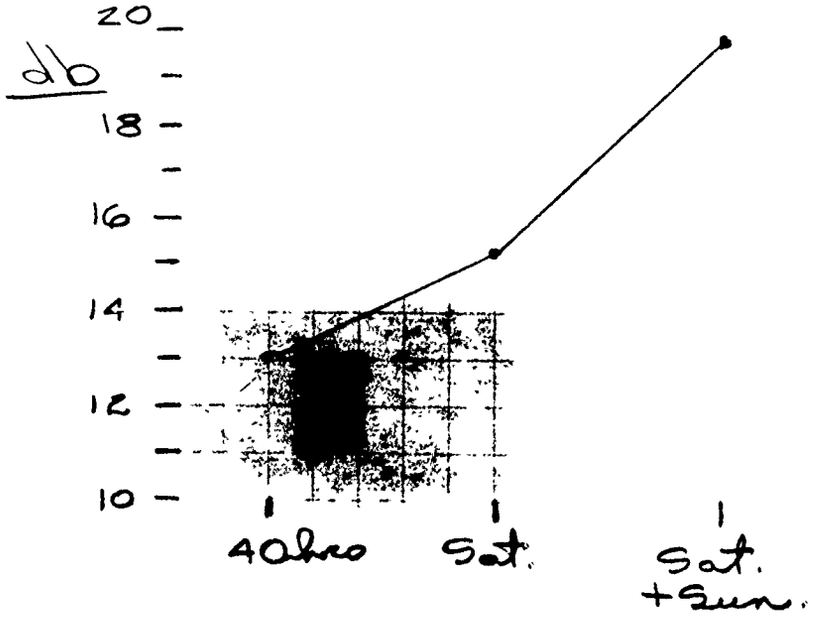

Equip.

Base = (-.6964 + 19.9564 + 19.9564)/3 = 13.0721

Base+ = (6.0206 + 19.9564 + 19.9564)/3 = 15.3111

Base++ = (19.9564

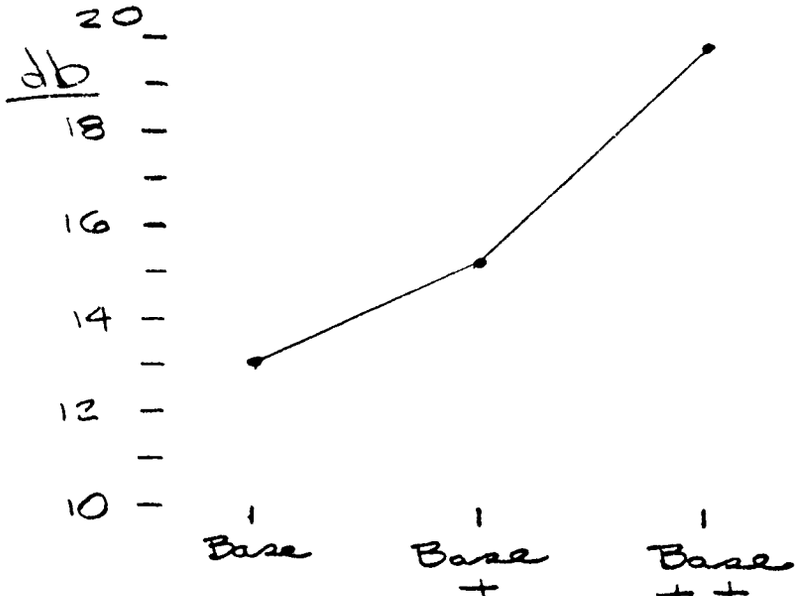


In this case, 50%/50%, Sat + Sun., Base++ is the best condition

Prediction = 16.1132 + (19.9564 - 16.1132)

(so only need one factor - which is 50%/50% to achieve 99%

Part no. 126A
Manpower Dist.

All Day shift
=(1254+268+257)/3 = 593
50% =(262+203+200)/3 = 221.7
1/3 =(221+188+185)/3 = 198

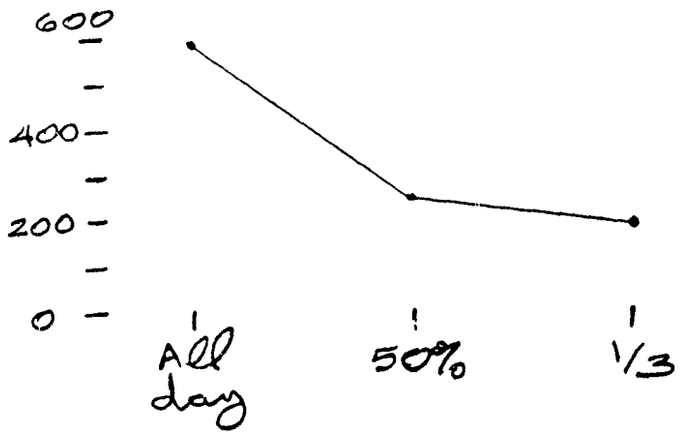


Overtime
40 hr=(1254+262+221)/3 = 579
Sat. =(268+203+188)/3 = 219.7
Sat+Sun=(257+200+185)/3 = 214.0

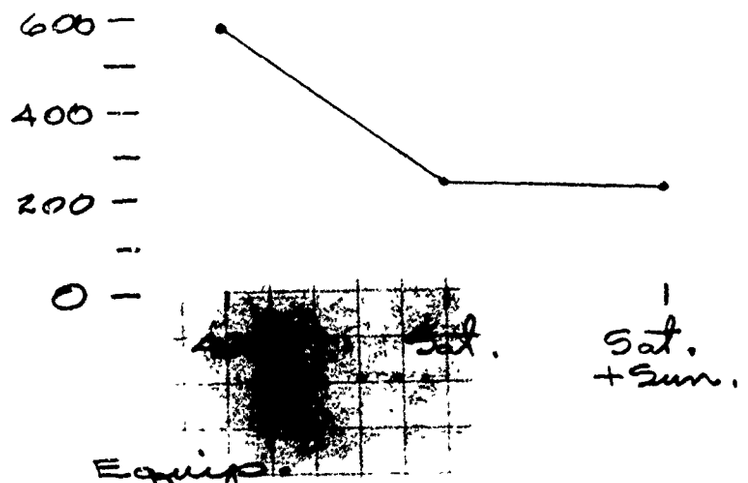


Equip
Base =(1254+203+185)/3 = 547.3
Base+ =(268+200+221)/3 = 229.7
Base++ =(257+262+188)/3 = 235.7

Part no. 126 A F-190

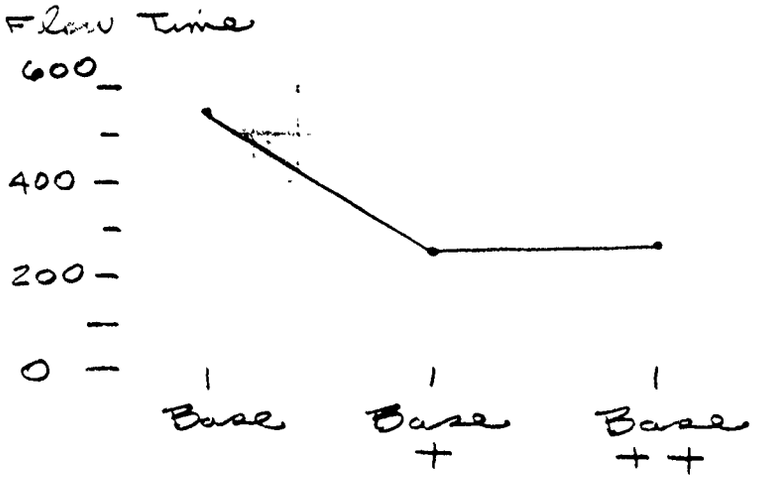


Omega Transform

| Run no. | Thruput | db |
|---|---|---|
| 1 | 63.4 | 2.3861 |
| 2 | 97.1 | 15.2482 |
| 3 | 96.6 | 14.5350 |
| 4 | 97.1 | 15.2482 |
| 5 | | |
| 6 | | |
| 7 | | |
| 8 | | |
| 9 | 97.1 | 15.2482 |

Manpower Dist.

All day shift

$= (2.3861 + 15.2482 + 14.5350)/3 = 10.7231$

50%

$= (15.2482$

$1/3 = .2482$

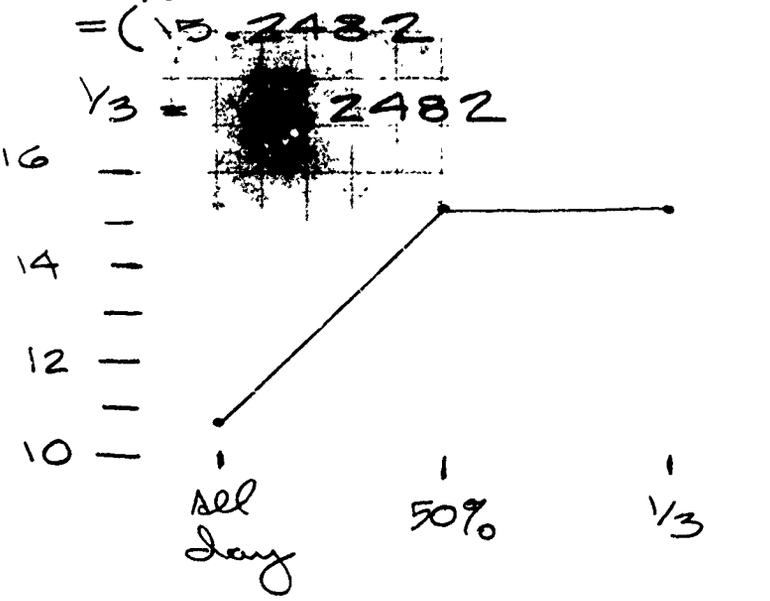

Part no. 126A FY 90

Overtime

40 hr. = (2.3861 + 15.2482 + 15.2482)/3 = 10.9608

Sat = ( [redacted] 2482

Sat + Sun = (14.5350 + 15.2482 + 15.2482)/3 = 15.0105

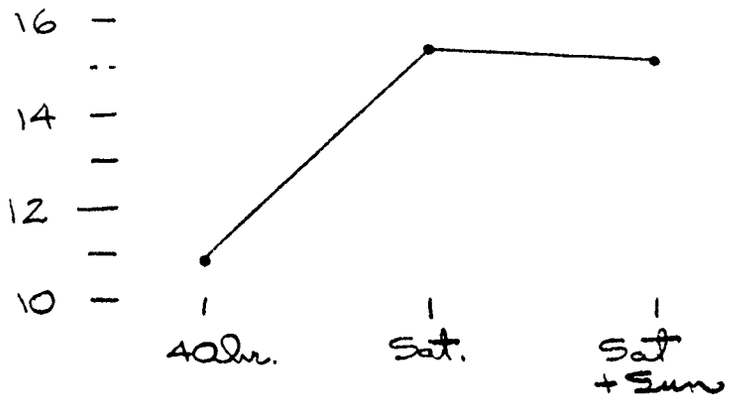


Equip.

Base = (2.3861 + 15.2482 + 15.2482)/3 = 10.9608

Base + = ( 15.2482

Base ++ = (14.535 + 15.2482 + 15.2482)/3 = 15.0105

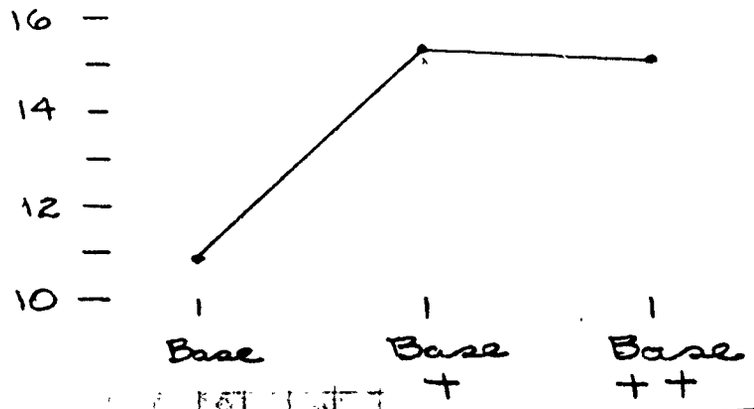


So [redacted] Sat. 50%

Predicted = 13.7398 + (15.2482 - 13.7398)

+ (15.2482 - 13.7398) + (15.2482 - 13.7398)

= 18.2649 ≈ 98.5%

300A FY 90



Manpower Dist.

All day shift

$= (1220 + 283 + 267)/3 = 590$

50/50 ..

$= (268 + 208 + 203)/3 = 226.3$

1/3

$= (234 + 190 + 187)/3 = 203.7$

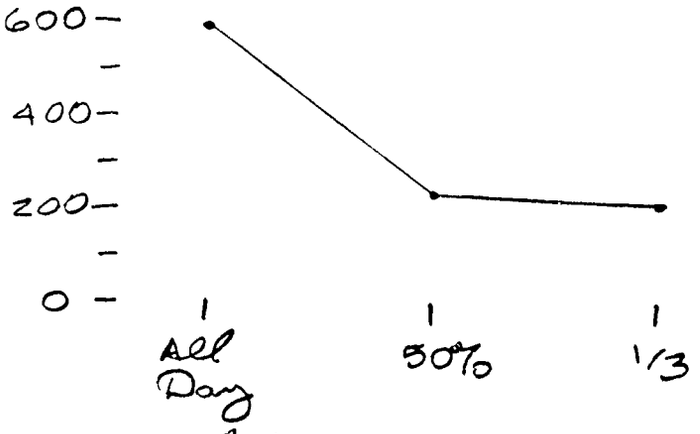


Overtime

40hrs $= (1220 + 268 + 234)/3 = 574$

Sat. $= (283 + 208 + 190)/3 = 227$

Sat + Sun $= (267 + 203 + 187)/3 = 219$

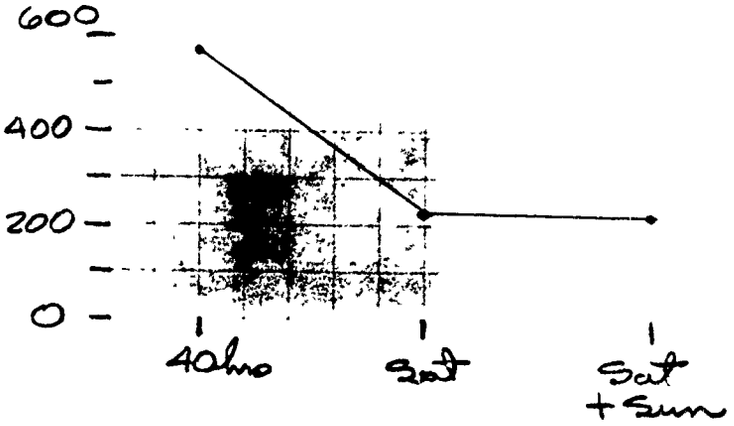

Equip.

Base = (220 + 208 + 187)/3 = 538.3

Base + = (283 + 203 + 234)/3 = 240

Base + + = (267 + 268 + 190)/3 = 241.7

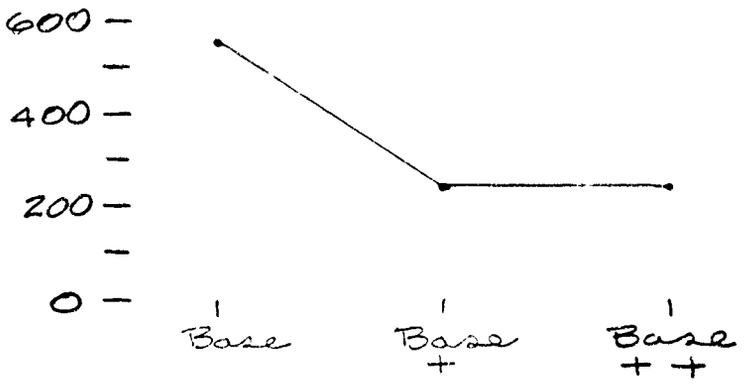


Any shift gives 100%

Base Thruput = 63.6%

136A FY90

Manpower Dist.

All Day shift

= (862 + 382 + 380)/3 = 541.3

50% = (393 + 323 + 322)/3 = 346

1/3 = (365 + 312 + 306)/3 = 327

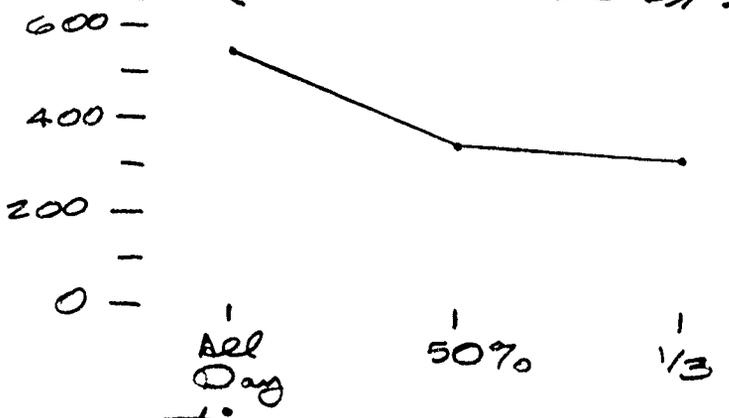


Overtime

40hrs = (862 + 393 + 363)/3 = 539.3

Sat. = (382 + 323 + 312)/3 = 339

Sat. + Sun. = (380 + 322 + 306)/3 = 336

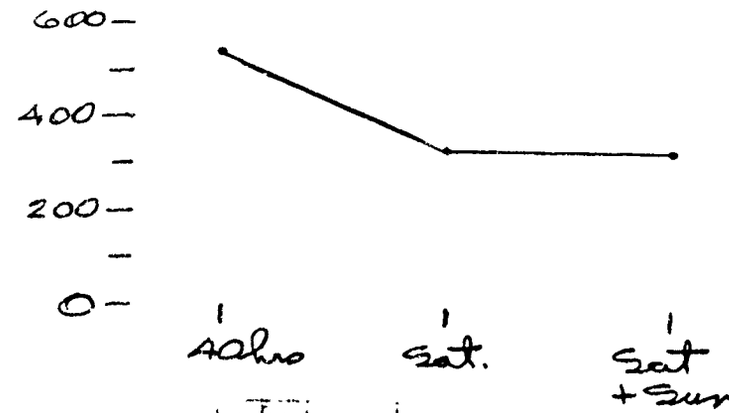


Equip

Base = (862 + 323 + 306)/3 = 497

Base + = (382 + 322 + 363)/3 = 355.7

Base ++ = (380 + 393 + 312)/3 = 361.7

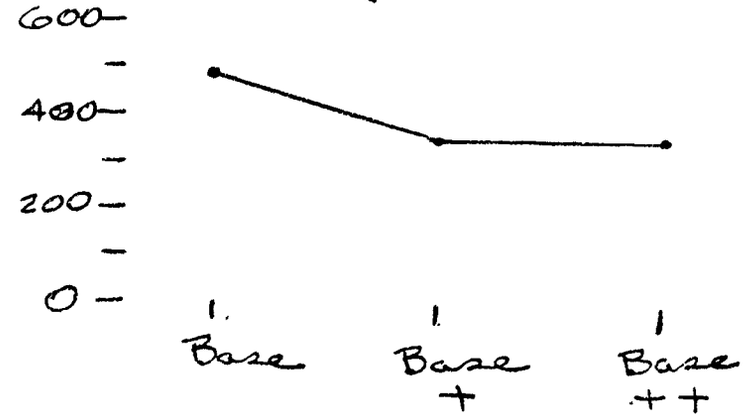

136A FY90

$-10 \log_{10}\left(\frac{1}{F}-1\right)$

Omega Transform

| Run No. | Thruput | db |
|---|---|---|
| 1 | 77.4 | 5.3463 |
| 2 | 98.6 | 18.4775 |
| 3 | 98.1 | 17.1292 |
| 4 | 99.5 | 22.9885 |
| 5 | 98.6 | 18.4775 |
| 6 | 99.1 | 20.4183 |
| 7 | 98.1 | 17.1292 |
| 8 | 99.5 | 22.9885 |
| 9 | 99.5 | 22.9885 |

Manpower Dist.

All day
$= (5.3463 + 18.4775 + 17.1292)/3 = 13.651$

50%
$= (22.9885 + 18.4775 + 20.4183)/3 = 20.6281$

1/3 $= (17.1292 + 22.9885 + 22.9885)/3 = 21.035$

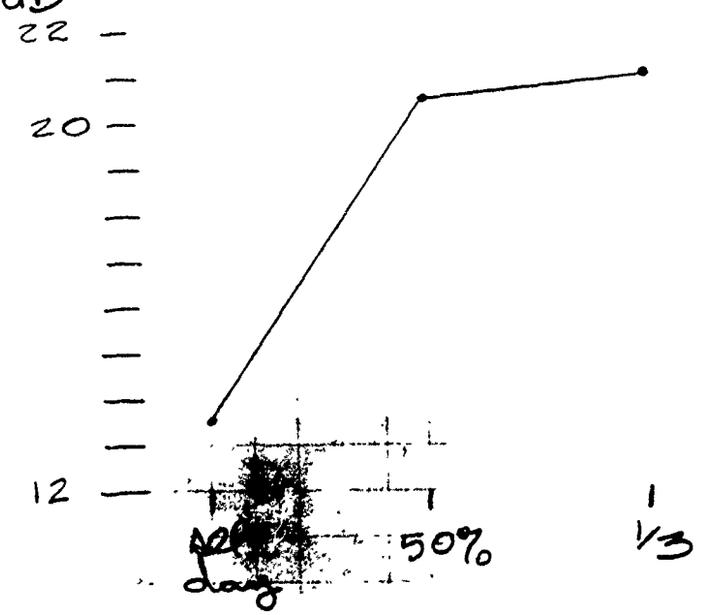

Overtime

40hrs

$= (5.3463 + 22.9885 + 17.1292)/3 = 15.1547$

Sat

$= (18.4775 + 20.4183 + 17.1292)/3 = 18.675$

Sat + Sun

$= (17.1292 + 22.9885 + 22.9885)/3 = 21.0354$

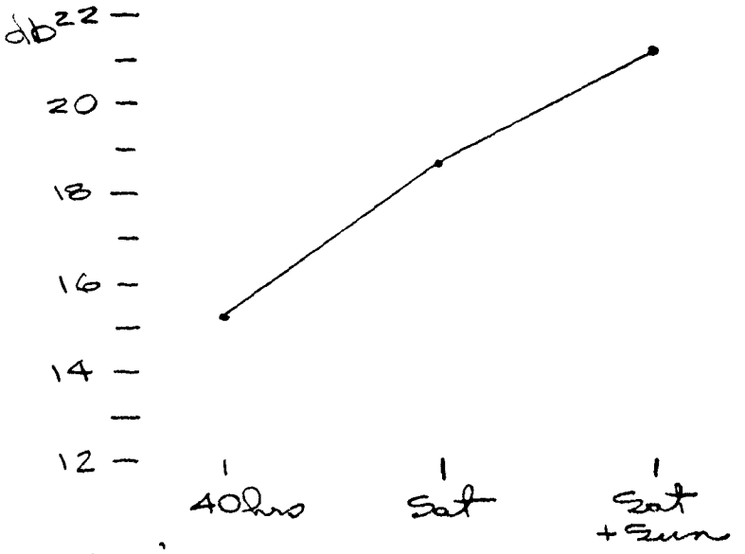


Equip.

Base $= (5.3463 + 18.4775 + 22.9885)/3 = 15.6041$

Base + $= (18.4775 + 20.4183 + 17.1292)/3 = 18.675$

Base ++ $= (17.1292 + 22.9885 + 22.9885)/3 = 21.0354$

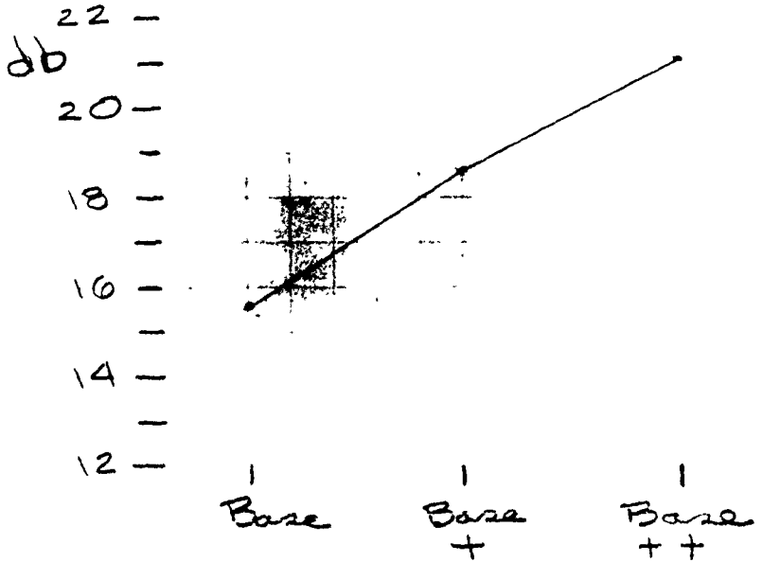


Average $= 18.4382$

so with just 50%, 99.1%

137A FY90

Manpower Dist.

All day shift

= (790 + 351 + 351)/3 = 497.3

50% = (363 + 296 + 296)/3 = 318.3

1/3 = (314 + 284 + 281)/3 = 293

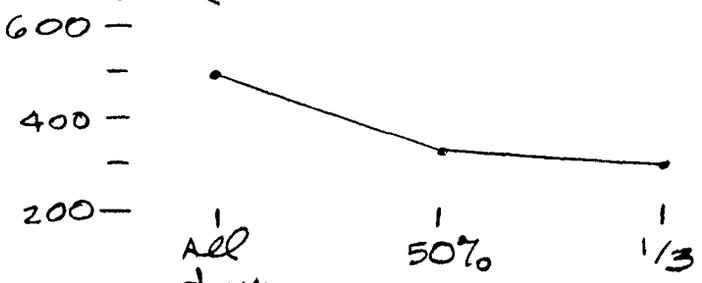


Overtime

40 hrs = (790 + 363 + 314)/3 = 489

Sat. = (351 + 296 + 284)/3 = 310.3

Sat + Sun = (351 + 296 + 281)/3 = 309.3

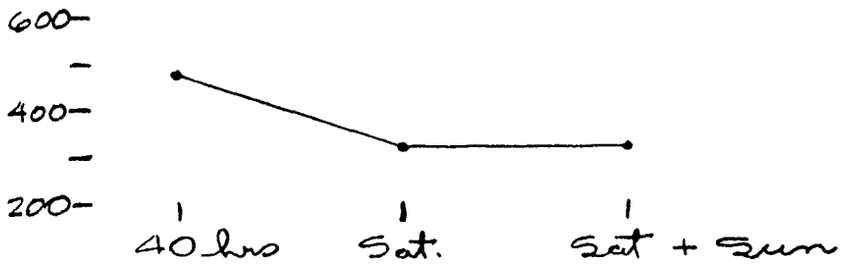


Equip.

Base = (790 + 296 + 281)/3 = 455.7

Base + = (351 + 296 + 314)/3 = 320.3

Base ++ = (351 + 363 + 284)/3 = 332.7

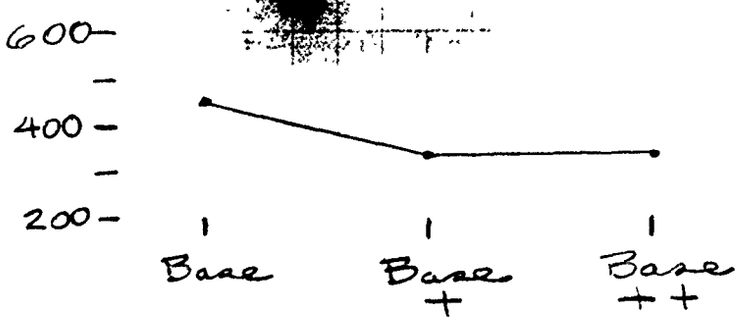


Any shift moves to 99%

Base = 89.6%

140A FY90

Manpower Dist.

All day shift

$= (1436+408+401)/3 = 748.3$

50%

$= (374+286+274)/3 = 311.3$

1/3 $= (288+232+239)/3 = 253$

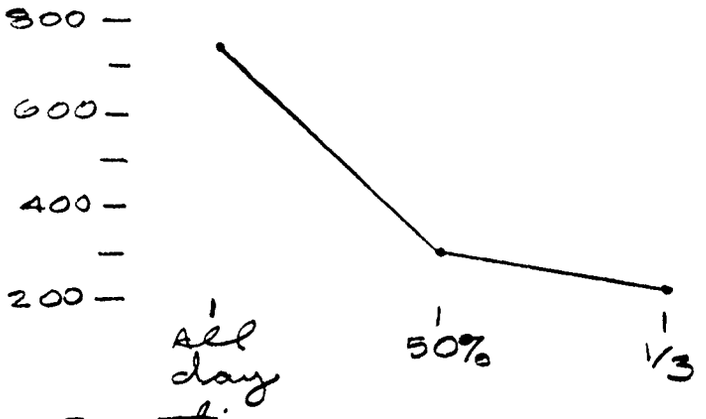


Overtime

40hr. $= (1436+374+288)/3 = 699.3$

Sat. $= (408+286+232)/3 = 308.7$

Sat.+Sun $= (401+274+239)/3 = 304.7$

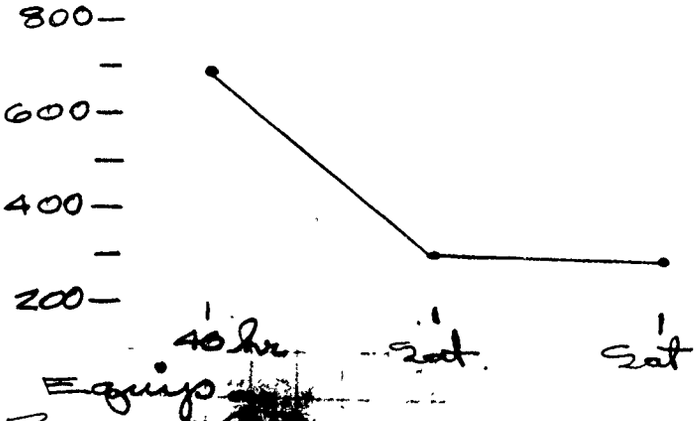


Equip

Base $= (436+286+239)/3 = 653.7$

Base+ $= (408+274+288)/3 = 323.3$

Base++ $= (401+374+232)/3 = 335.7$

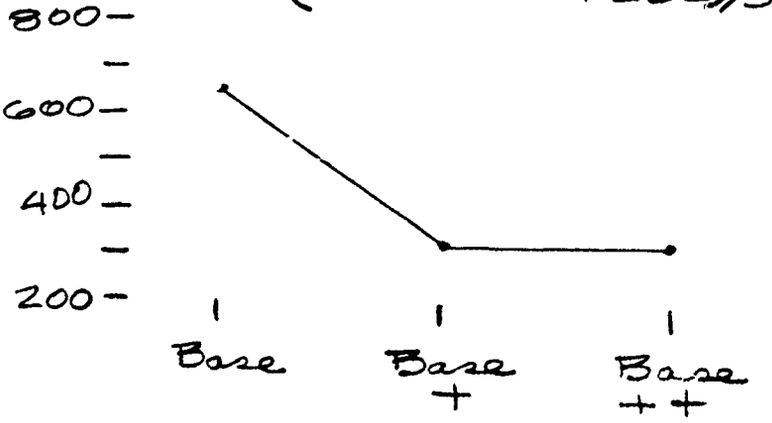


Base 67.9

Day shift provides at least 98.1%

Manpower Dist.
All day shift
(829+536+557)/3 = 640.7
50% (475+369+368)/3 = 404
1/3 (402+324+326)/3 = 350.7
Overtime
40hrs = (829+475+402)/3 = 568.7
Sat. = (536+369+324)/3 = 409.7
Sat+Sun = (557+368+326)/3 = 417
Equip.
Base = (829+369+326)/3 = 508
Base+ = (536+368+402)/3 = 435.3
Base++ = (557+475+324)/3 = 452.0

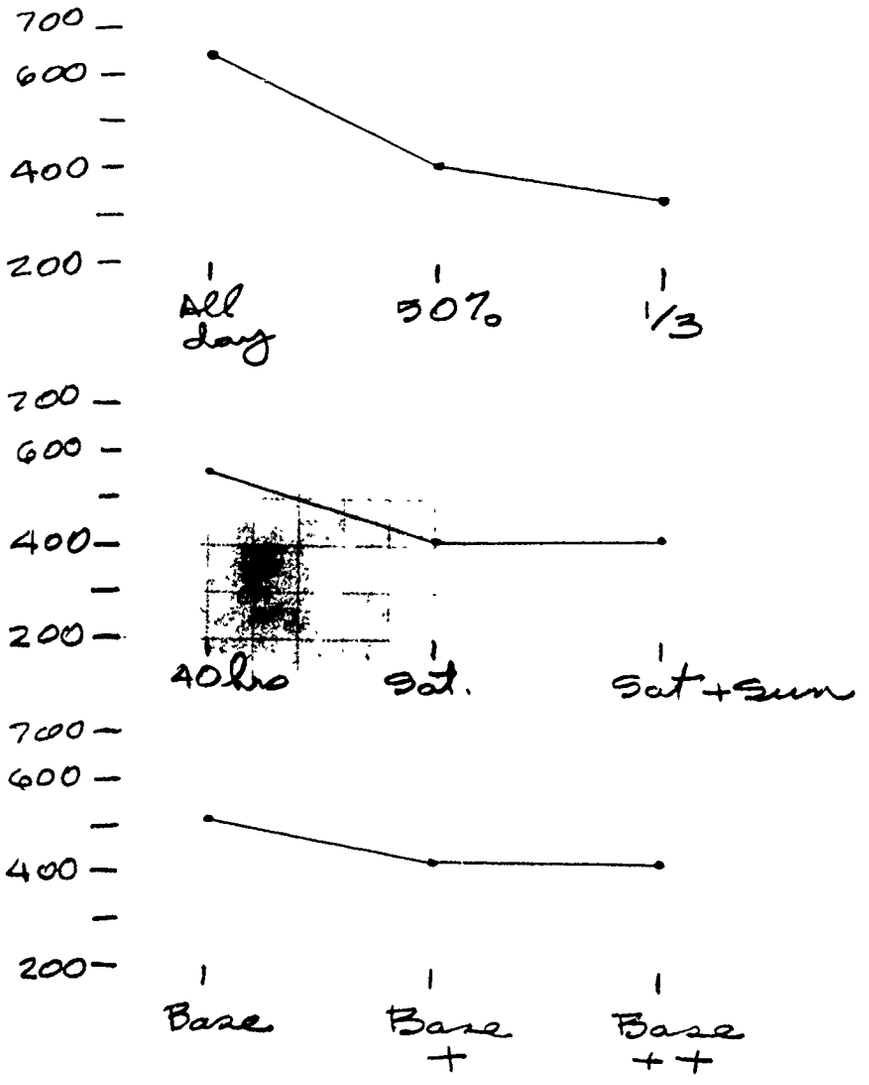

150A FY90

Omega Transform

| Run no. | Thruput | db |
|---|---|---|
| 1 | 96.6 | 14.5350 |
| 2 | 97.3 | 15.5675 |
| 3 | 96.6 | 14.5350 |
| 4 | 99.3 | 21.5185 |
| 5 | 99.3 | 21.5185 |
| 6 | 98.6 | 18.4775 |
| 7 | 98.6 | 18.4775 |
| 8 | 99.3 | 21.5185 |
| 9 | 99.3 | 21.5185 |

Manpower Dist.

All day shift

(14.5350 + 15.5675 + 14.5350)/3 = 14.8792

50% (21.5185 + 21.5185 + 18.4775)/3 = 20.5048

1/3 (18.4775 + 21.5185 + 21.5185)/3 = 20.5048

Overtime

40 hrs (14.5350 + 21.5185 + 18.4775)/3 = 18.177

Sat (15.5675 + 21.5185 + 21.5185)/3 = 19.5348

Sat + Sun (14.5350 + 18.4775 + 21.5185)/3 = 18.177

Equip.

Base = (14.5350 + 21.5185 + 21.5185)/3 = 19.1907

Base + [redacted] (15.5675 + 18.4775 + 18.4775)/3 = 17.5075

Base + [redacted] (14.5350 + 21.5185 + 21.5185)/3 = 19.1907

Average = 18.6296

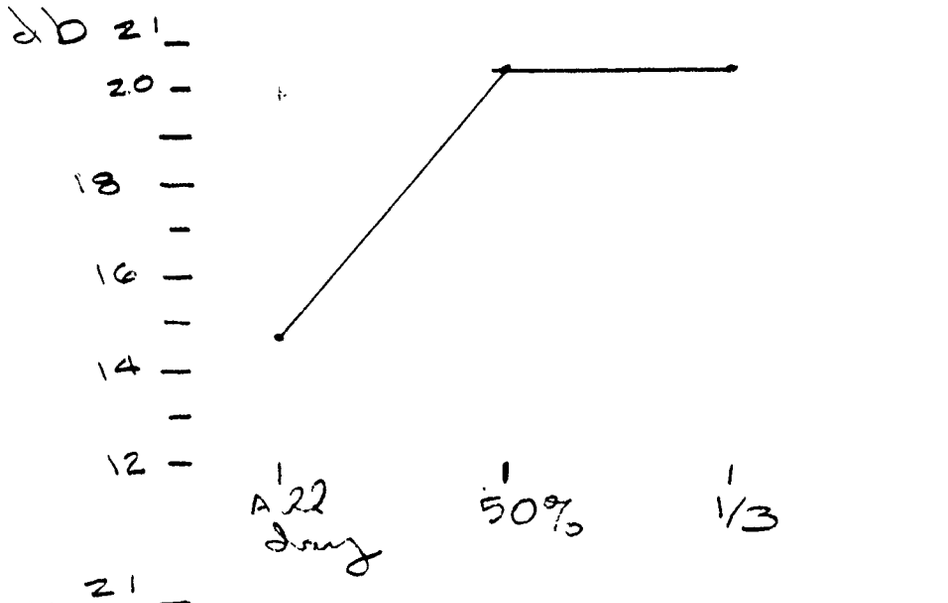
db
21
20
18
16
14
12
A 22 days
50%
1/3

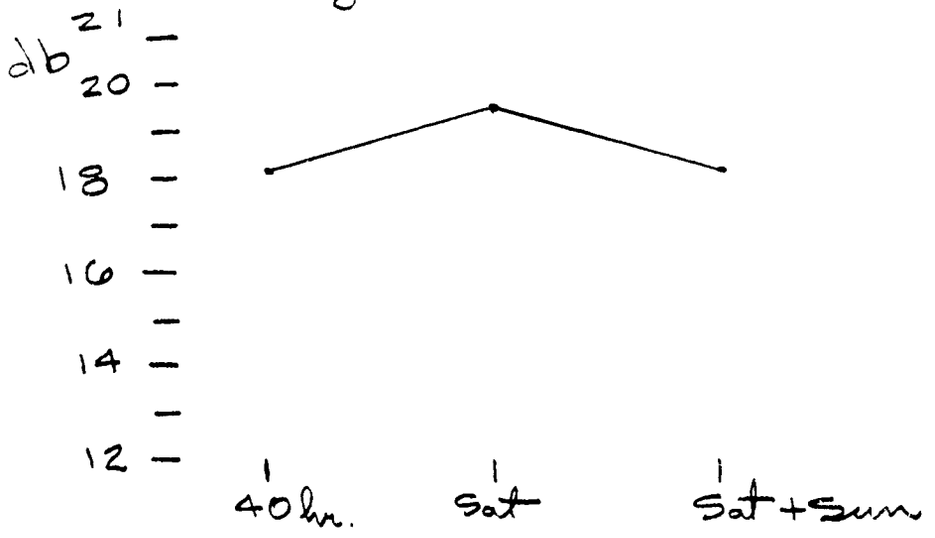
db
21
20
18
16
14
12
40 hr.
Sat
Sat + Sun

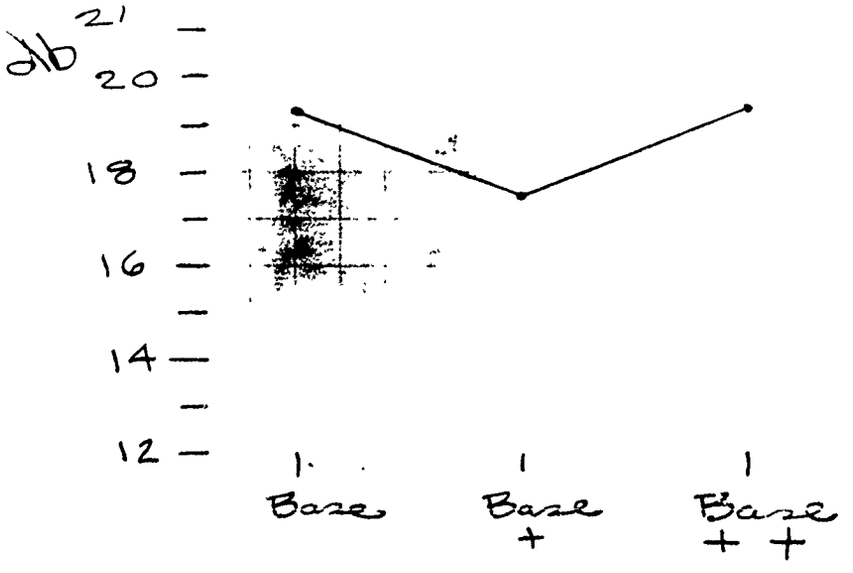
db
21
20
18
16
14
12
Base
Base +
Base + +

175A FY90

Manpower Dist.

All day shift

(1016 + 521 + 467)/3 = 668

50%

(432 + 365 + 350)/3 = 382.3

1/3 (386 + 317 + 318)/3 = 340.3

Overtime

40hr. (1016 + 432 + 386)/3 = 611.3

Sat. (521 + 365 + 317)/3 = 401

Sat + Sun (467 + 350 + 318)/3 = 378.3

Equip.

Base (1016 + 365 + 318)/3 = 566.3

Base + (521 + 350 + 386)/3 = 419

Base ++ (467 + 432 + 317)/3 = 405.3

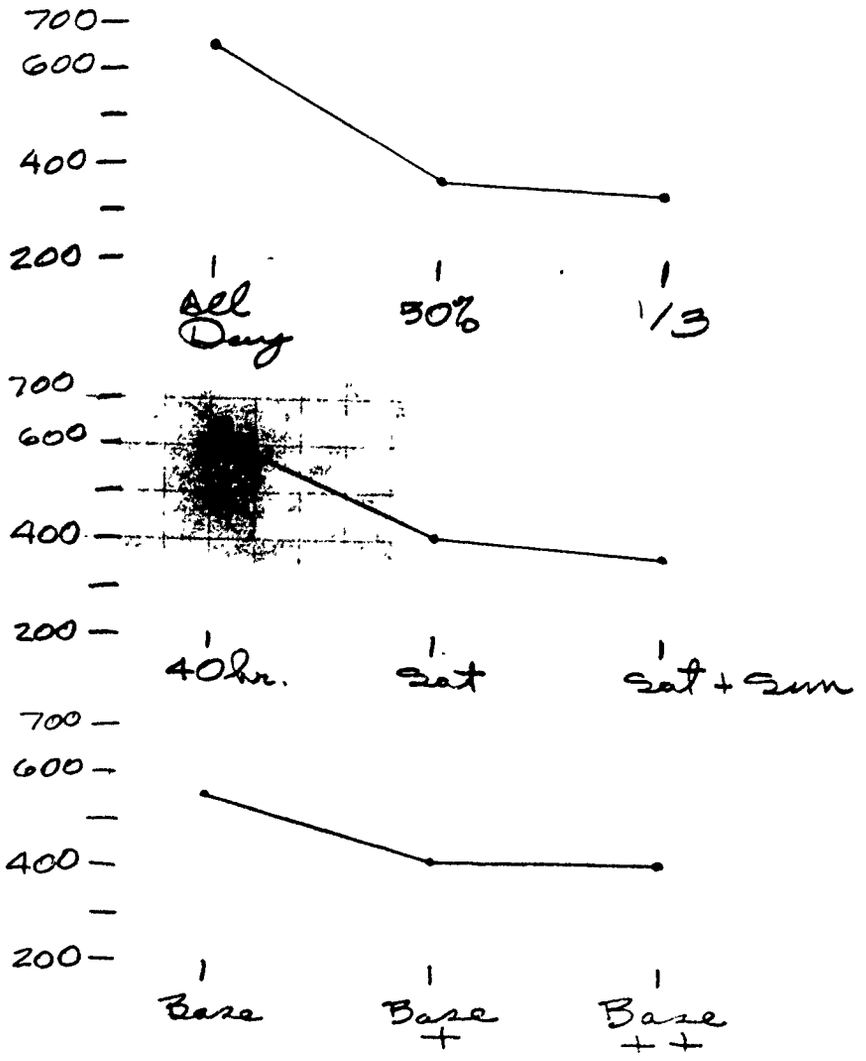

Omega Transform

| Run No. | Thruput | db |
|---|---|---|
| 1 | 54.3 | .7488 |
| 2 | 89.4 | 9.2603 |
| 3 | 95.4 | 13.1679 |
| 4 | 96.0 | 13.8021 |
| 5 | 98.0 | 16.9020 |
| 6 | 98.7 | 18.8037 |
| 7 | 96.7 | 14.6691 |
| 8 | 98.7 | 18.8037 |
| 9 | 99.3 | 21.5185 |

Manpower Dist.

All day

(.7488 + 9.2603 + 13.1679)/3 = 7.7257

50%

(13.8021 + 16.9020 + 18.8037)/3 = 16.5026

1/3

(14.6691 + 18.8037 + 21.5185)/3 = 18.3304

Overtime

40 hr. (.7488 + 13.8021 + 14.6691)/3 = 9.74

Sat (9.2603 + 16.9020 + 18.8037)/3 = 14.9387

Sat + Sun (13.1679 + 18.8037 + 21.5185)/3 = 17.8300

Equip.

Base (.7488 + 16.9020 + 21.5185)/3 = 13.0564

Base + (9.2603 + 18.8037 + 14.6691)/3 = 14.2444

Base ++ (13.1679 + 13.8021 + 18.8037)/3 = 15.2579

Average = 14.1862

175 A FY 90

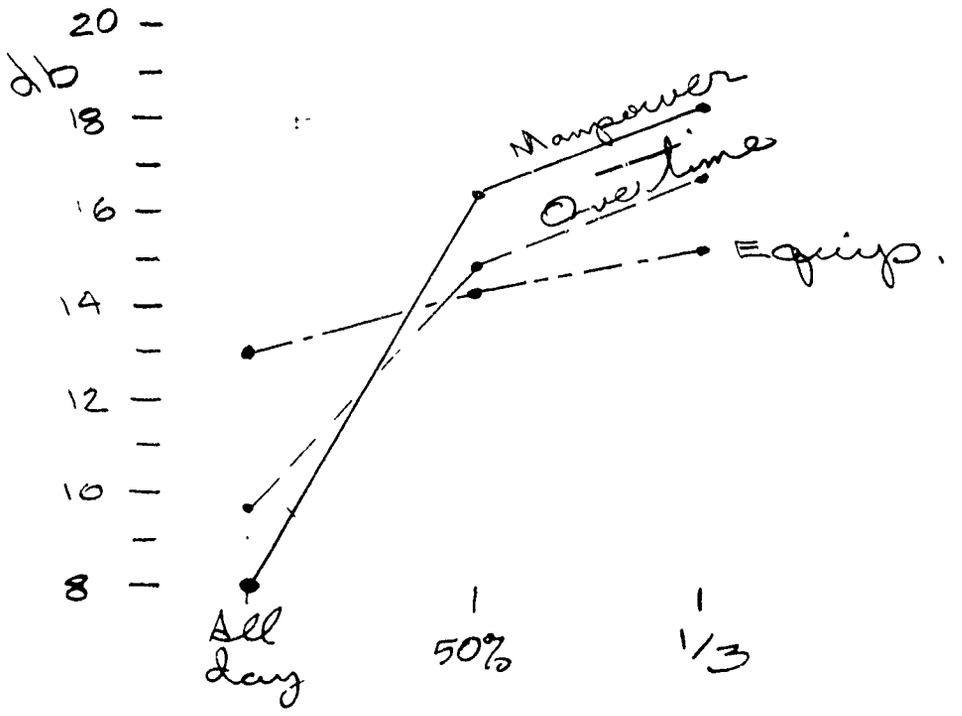

249A F-100

Manpower Dist.

All day

(2808 + 1474 + 1183)/3 = 1821.7

50%

(903 + 920 + 729)/3 = 850.7

1/3 (735 + 361 + 588)/3 = 561.3

Overtime

40 hr (2808 + 903 + 735)/3 = 1482

Sat (1474 + 920 + 361)/3 = 918.3

Sat + Sun (1183 + 729 + 588)/3 = 833.3

Equip.

Base (2808 + 920 + 588)/3 = 1438.7

Base + (1474 + 729 + 735)/3 = 979.3

Base + + (1183 + 903 + 361)/3 = 815.7

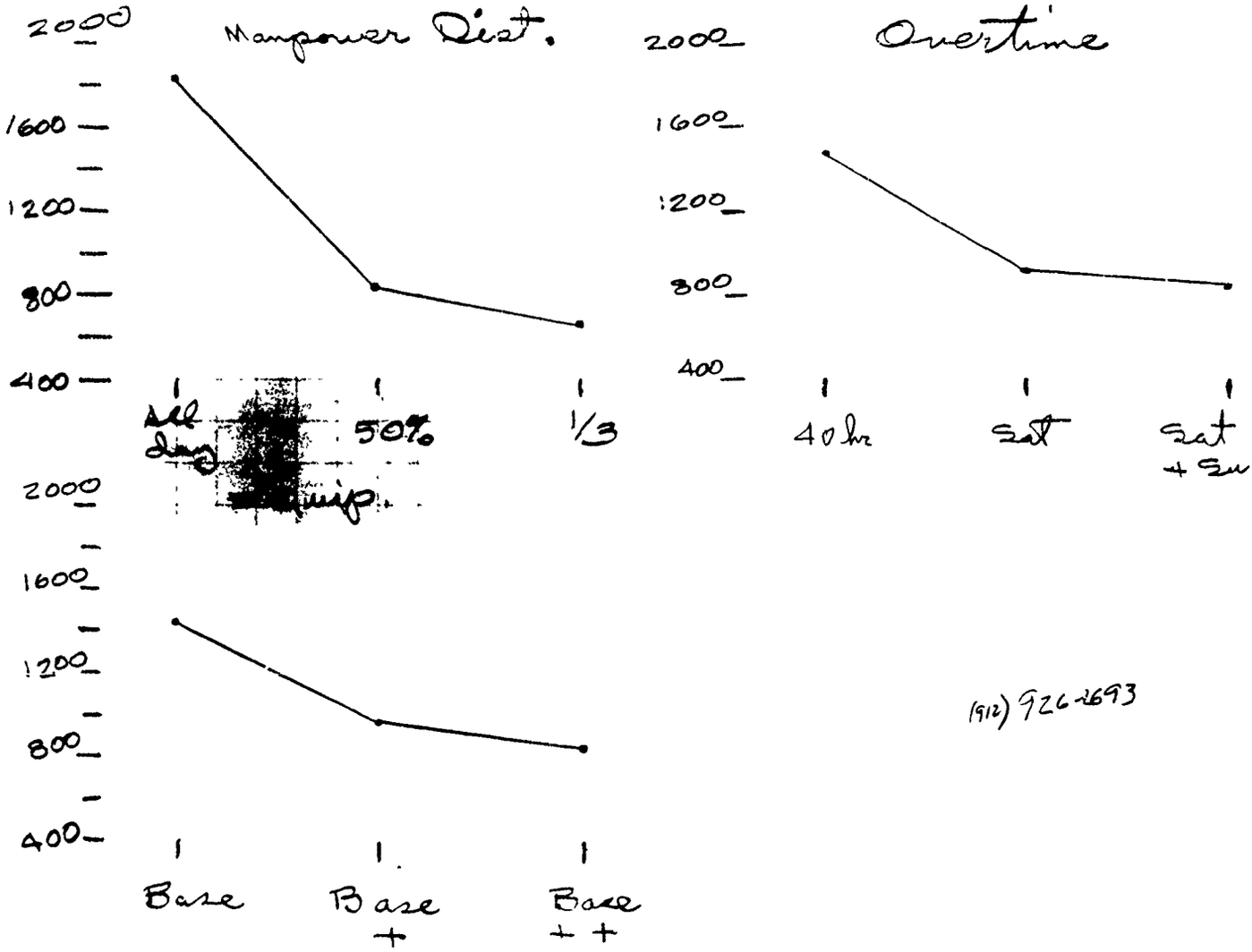


(912) 926-2693

Omega Transform

| Run no. | Thruput | db |
|---|---|---|
| 1 | 22 | −5.4967 |
| 2 | 40.1 | −1.7428 |
| 3 | 48.9 | −.1911 |
| 4 | 63.7 | 2.4423 |
| 5 | 61.5 | 2.0341 |
| 6 | 78.6 | 5.6501 |
| 7 | 79.1 | 5.7803 |
| 8 | 97.2 | 15.4051 |
| 9 | 97.8 | 16.4792 |

Manpower Dist.

All day shift

(−5.4967 −1.7428 −.1911)/3 = −2.4769

50%

(2.4423+2.0341+5.6501)/3 = 3.3755

1/3 (5.7803+15.4051+16.4792)/3 = 12.5549

overtime

40hr (−5.4967+2.4423+5.7805)/3 = .9086

sat (−1.7428+2.0341+15.4051)/3 = 15.6964

sat+Sun. (−.1911+5.6501+16.4792)/3 = 21.9382

Equip.

Base ([redacted]4967+2.0341+16.4792)/3 = 4.5389

Base + ([redacted]7428+5.6501+5.7803)/3 = 3.2292

Base ++ (15.4051+2.4423−.1911)/3 = 17.6563

Average 4.4845

250A FY90

Manpower Dist.

All day (2902+1456+1185)/3 = 1847.7

50% (908+911+725)/3 = 848

1/3 (739+359+596)/3 = 564.7

Overtime

40hr. (2902+908+739)/3 = 1516.3

Sat (1456+911+359)/3 = 908.7

Sat+Sun (1185+725+596)/3 = 835.3

Equip.

Base (2902+911+596)/3 = 1469.7

Base+ (1456+725+739)/3 = 973.3

Base++ (1185+908+359)/3 = 817.3

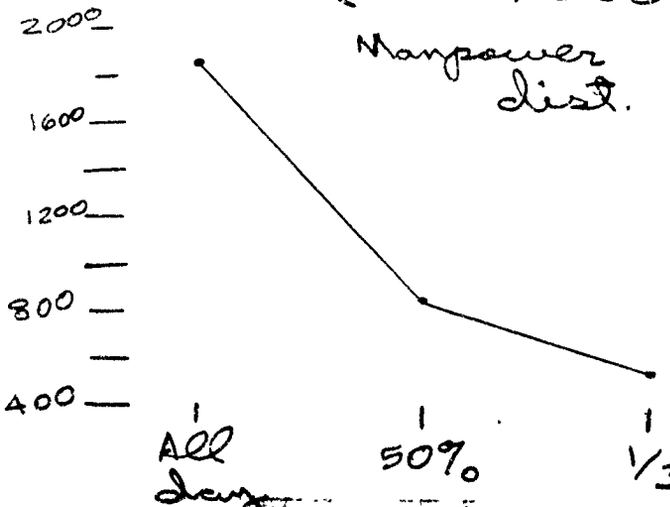


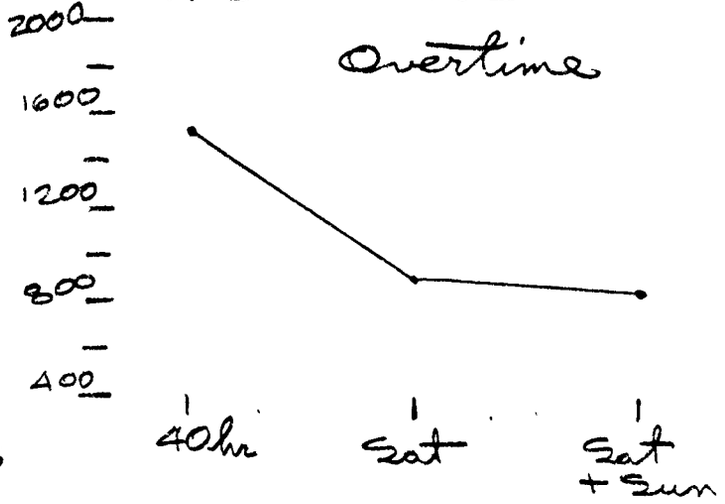


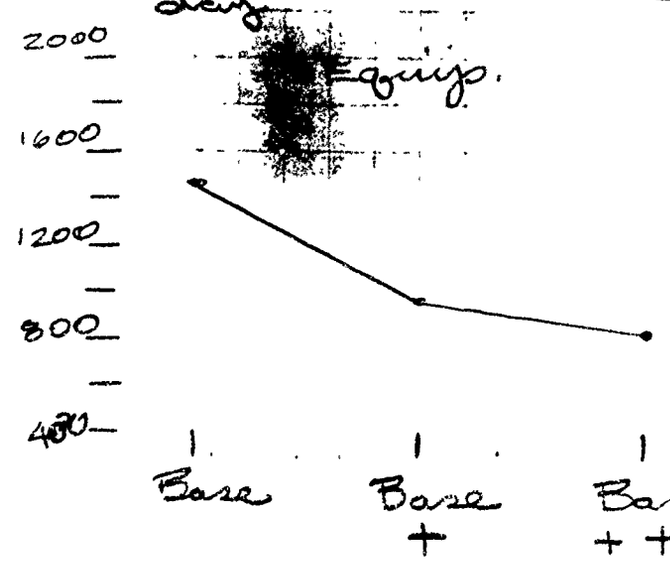

250A FY90

Omega

| Run No. | Thruput | db |
|---|---|---|
| 1 | 24.1 | -4.9822 |
| 2 | 46.2 | -.6614 |
| 3 | 56.9 | 1.2063 |
| 4 | 74.9 | 4.7480 |
| 5 | 72.8 | 4.2756 |
| 6 | 93.8 | 11.7981 |
| 7 | 91.8 | 10.4903 |
| 8 | 100 (99) | 19.9564 |
| 9 | 100 (99) | 19.9564 |

Manpower Dist.

All day shift

$(-4.9822 + (-.6614) + 1.2063)/3 = -1.4791$

50%

$(4.7480 + 4.2756 + 11.7981)/3 = 6.9406$

$1/3(10.4903 + 19.9564 + 19.9564)/3 = 16.8010$

Overtime

40hr $(-4.9822 + 4.7480 + 10.4903)/3 = 3.4187$

Sat $(-.6614 + 4.2756 + 19.9564)/3 = 7.8569$

Sat + Sun $(1.2063 + 11.7981 + 19.9564)/3 = 10.9869$

Equip

Base ([redacted] + 4.2756 + 19.9564)/3 = 6.4166

Base + ([redacted].6614 + 11.7981 + 10.4903)/3 = 7.209

Base ++ $(1.2063 + 4.7480 + 19.9564)/3 = 8.6369$

Average 7.4208

→ 97.2 ⅓, sat. (++)

100% ⅓, sat ++

~~+77~~

137

148

119

99.7 50, sat, Base ++

99 50, —,

321

168

103

85

86.2%



| SURGE INDUCTIONS | BASE SIMULATION | THROUGHPUT |
|---|---|---|
| 224 | 150 | 67.0% |
| 219 | 189 | 86.3% |
| 277 | 51 | 18.4% |
| 249 | 71 | 28.5% |
| 279 | 116 | 41.6% |
| 287 | 112 | 39.0% |
| 358 | 161 | 45.0% |
| 327 | 186 | 56.9% |
| 178 | 71 | 39.9% |
| 254 | 185 | 72.8% |
| 261 | 82 | 31.4% |
| 286 | 286 | 100.0% |
| 0 | 0 | N/A |
| 31 | 30 | 96.8% |
| 24 | 27 | 112.5% |
| 18 | 19 | 105.6% |
| 47 | 44 | 93.6% |
| 0 | 0 | N/A |
| 297 | 27 | 9.1% |
| 309 | 33 | 10.7% |
| 3925 | 1840 | 46.9% |



OC/ALC HADPAB

SHEETMETAL REPAIR SHOP

JUNE 15, 1989

| END-ITEM | FY90 INDUCTIONS | BASE SIMULATION | THROUGHPUT |
|---|---|---|---|
| 15188A | 0 | 0 | N/A |
| 15237A | 0 | 0 | N/A |
| 15249A | 182 | 40 | 22.0% |
| 15250A | 195 | 47 | 24.1% |
| 15119A | 176 | 65 | 38.2% |
| 15321A | 161 | 74 | 46.0% |
| 15175A | 131 | 82 | 54.3% |
| 15126A | 175 | 111 | 63.4% |
| 15300A | 184 | 117 | 63.6% |
| 15146A | 196 | 72 | 67.9% |
| 15136A | 212 | 164 | 77.4% |
| 15137A | 201 | 180 | 89.6% |
| 15113A | 134 | 124 | 92.5% |
| 15025A | 136 | 131 | 96.3% |
| 15150A | 146 | 141 | 96.6% |
| 15189A | 19 | 19 | 100.0% |
| 15236A | 23 | 23 | 100.0% |
| 15192A | 12 | 12 | 100.0% |
| 15191A | 16 | 16 | 100.0% |
| 15178A | 177 | 177 | 100.0% |
| | 2400 | 1595 | 66.5% |

| END-ITEM | SURGE INDUCTIONS | BASE SIMULATION | THROUGHPUT |
|---|---|---|---|
| 15188A | 0 | 0 | N/A |
| 15237A | 0 | 0 | N/A |
| 15249A | 297 | 27 | 9.1% |
| 15250A | 309 | 33 | 10.7% |
| 15119A | 277 | 51 | 18.4% |
| 15321A | 249 | 71 | 28.5% |
| 15175A | 261 | 82 | 31.4% |
| 15300A | 287 | 112 | 39.0% |
| 15146A | 178 | 71 | 39.9% |
| 15126A | 279 | 116 | 41.6% |
| 15136A | 358 | 161 | 45.0% |
| 15137A | 327 | 186 | 56.9% |
| 15025A | 224 | 150 | 67.0% |
| 15150A | 254 | 185 | 72.8% |
| 15113A | 219 | 189 | 86.3% |
| 15236A | 47 | 44 | 93.6% |
| 15189A | 31 | 30 | 96.8% |
| 15192A | 18 | 18 | 100.0% |
| 15191A | 24 | 24 | 100.0% |
| 15178A | 286 | 286 | 100.0% |
| | 3925 | 1836 | 46.8% |

ABBATANA

OC/ALC MABPAB
SHEETMETAL REPAIR SHOP 6/15/89

| END-ITEM | SURGE INDUCTIONS | BASE SIMULATION | THROUGHPUT |
|---|---|---|---|
| 15188A | 0 | 0 | N/A |
| 15237A | 0 | 0 | N/A |
| 15249A | 297 | 27 | 9.1% |
| 15250A | 309 | 33 | 10.7% |
| 15119A | 277 | 51 | 18.4% |
| 15321A | 249 | 71 | 28.5% |
| 15175A | 261 | 82 | 31.4% |
| 15300A | 287 | 112 | 39.0% |
| 15140A | 178 | 71 | 39.9% |
| 15126A | 279 | 116 | 41.6% |
| 15136A | 358 | 161 | 45.0% |
| 15137A | 327 | 186 | 56.9% |
| 15025A | 224 | 150 | 67.0% |
| 15150A | 254 | 185 | 72.8% |
| 15113A | 219 | 189 | 86.3% |
| 15236A | 47 | 44 | 93.6% |
| 15189A | 31 | 30 | 96.8% |
| 15192A | 18 | 18 | 100.0% |
| 15191A | 24 | 24 | 100.0% |
| 15178A | 286 | 286 | 100.0% |
| | 3925 | 1836 | 46.8% |



OC/ALC MABPAB
SHEETMETAL REPAIR SHOP 6/15/89

| END-ITEM | SURGE INDUCTIONS | STD HRS | WORKLOAD W/AVG | % |
|---|---|---|---|---|
| 15025A | 224 | 163.49 | 36622 | 10.2% |
| 15250A | 309 | 110.99 | 34296 | 9.5% |
| 15249A | 297 | 110.53 | 32827 | 9.1% |
| 15113A | 219 | 147.72 | 32351 | 9.0% |
| 15136A | 358 | 79.18 | 28346 | 7.9% |
| 15300A | 287 | 98.31 | 28215 | 7.8% |
| 15137A | 327 | 79.18 | 25892 | 7.2% |
| 15119A | 277 | 89.76 | 24864 | 6.9% |
| 15126A | 279 | 88.73 | 24756 | 6.9% |
| 15321A | 249 | 90.24 | 22470 | 6.2% |
| 15150A | 254 | 85.15 | 21628 | 6.0% |
| 15175A | 261 | 73.86 | 19277 | 5.3% |
| 15140A | 178 | 51.65 | 9194 | 2.5% |
| 15236A | 47 | 121.58 | 5714 | 1.6% |
| 15178A | 286 | 18.97 | 5425 | 1.5% |
| 15189A | 31 | 120.73 | 3743 | 1.0% |
| 15191A | 24 | 118.72 | 2849 | 0.8% |
| 15192A | 18 | 118.72 | 2137 | 0.6% |
| 15188A | 0 | 120.73 | 0 | 0.0% |
| 15237A | 0 | 28.6 | 0 | 0.0% |
| | | | 360606 | 100.0% |



SET WITH INDEPENDENT FIXTURES



PART NO. 15025A

| RUN NO. | FLOW TIME | NO. OF PARTS | WORKLOAD SURGE INDUCTION |
|---|---|---|---|
| 1 F B | 1566 | 150 | 224 |
| 2 S B+ | 850 | 208 | 224 |
| 3 SS B++ | 802 | 213 | |
| 4 F B++ | 520 | 225 | |
| 5 S B | 398 | 222 | |
| 6 SS B+ | 380 | 222 | |
| 7 F B+ | 425 | 222 | |
| 8 S B++ | 347 | 222 | |
| 9 SS B | 321 | 222 | |

PART NO. 15113A

| RUN NO. | FLOW TIME | NO. OF PARTS | WORKLOAD SURGE INDUCTION |
|---|---|---|---|
| 1 | 1328 | 189 | 219 |
| 2 | 738 | 218 | 219 |
| 3 | 736 | 219 | |
| 4 | 660 | 220 | |
| 5 | 485 | 218 | |
| 6 | 481 | 219 | |
| 7 | 534 | 219 | |
| 8 | 420 | 217 | |
| 9 | 407 | 218 | |

SET

PART NO. 15119A

| RUN NO. | FLOW TIME | WORKLOAD SURGE: NO. OF PARTS | WORKLOAD SURGE: INDUCTION |
|---|---|---|---|
| 1 | 3705 | 51 | 277 |
| 2 | 1544 | 143 | 277 |
| 3 | 1095 | 200 | |
| 4 | 826 | 259 | |
| 5 | 963 | 213 | |
| 6 | 802 | 259 | |
| 7 | 759 | 276 | |
| 8 | 258 | 274 | |
| 9 | 412 | 279 | |



PART NO. 15321A

| RUN NO. | FLOW TIME | WORKLOAD SURGE: NO. OF PARTS | WORKLOAD SURGE: INDUCTION |
|---|---|---|---|
| 1 | 2866 | 71 | 249 |
| 2 | 1891 | 112 | 249 |
| 3 | 1160 | 183 | |
| 4 | 901 | 234 | |
| 5 | 1504 | 144 | |
| 6 | 782 | 256 | |
| 7 | 1002 | 210 | |
| 8 | 267 | 248 | |
| 9 | 422 | 255 | |

SET

PART NO. 15126A

| RUN NO. | FLOW TIME | WORKLOAD NO. OF PARTS | SURGE INDUCTION |
|---|---|---|---|
| 1 | 2417 | 116 | 279 |
| 2 | 1184 | 225 | 279 |
| 3 | 6160 | 282 | |
| 4 | 276 | 276 | |
| 5 | 236 | 277 | |
| 6 | 203 | 277 | |
| 7 | 258 | 275 | |
| 8 | 210 | 277 | |
| 9 | 187 | 277 | |

PART NO. 15300A

| RUN NO. | FLOW TIME | WORKLOAD NO. OF PARTS | SURGE INDUCTION |
|---|---|---|---|
| 1 | 2377 | 112 | 287 |
| 2 | 1184 | 234 | 287 |
| 3 | 630 | 297 | |
| 4 | 285 | 288 | |
| 5 | 250 | 286 | |
| 6 | 210 | 286 | |
| 7 | 266 | 288 | |
| 8 | 217 | 286 | |
| 9 | 194 | 286 | |

SET



PART NO. 15136A

| RUN NO. | FLOW TIME | NO. OF PARTS | WORKLOAD SURGE INDUCTION |
|---|---|---|---|
| 1 | 1746 | 161 | 358 |
| 2 | 689 | 355 | 358 |
| 3 | 398 | 356 | |
| 4 | 437 | 353 | |
| 5 | 344 | 354 | |
| 6 | 324 | 354 | |
| 7 | 431 | 358 | |
| 8 | 327 | 355 | |
| 9 | 308 | 355 | |

PART NO. 15137A

| RUN NO. | FLOW TIME | NO. OF PARTS | WORKLOAD SURGE INDUCTION |
|---|---|---|---|
| 1 | 1538 | 186 | 327 |
| 2 | 658 | 328 | 327 |
| 3 | 368 | 328 | |
| 4 | 422 | 324 | |
| 5 | 315 | 324 | |
| 6 | 299 | 325 | |
| 7 | 407 | 330 | |
| 8 | 296 | 326 | |
| 9 | 284 | 326 | |

INDEPENDENT

PART NO. 15140A

| RUN NO. | FLOW TIME | WORKLOAD NO. OF PARTS | SURGE INDUCTION |
|---|---|---|---|
| 1 | 2771 | 71 | 178 |
| 2 | 457 | 173 | 178 |
| 3 | 400 | 173 | |
| 4 | 361 | 173 | |
| 5 | 335 | 174 | |
| 6 | 275 | 176 | |
| 7 | 296 | 174 | |
| 8 | 235 | 177 | |
| 9 | 246 | 176 | |

INDEP.

PART NO. 15150A

| RUN NO. | FLOW TIME | WORKLOAD NO. OF PARTS | SURGE INDUCTION |
|---|---|---|---|
| 1 | 1476 | 185 | 254 |
| 2 | 662 | 229 | 254 |
| 3 | 677 | 226 | |
| 4 | 527 | 231 | |
| 5 | 382 | 243 | |
| 6 | 375 | 243 | |
| 7 | 422 | 240 | |
| 8 | 346 | 245 | |
| 9 | 325 | 247 | |

INDEP.

PART NO. 15175A

| RUN NO. | FLOW TIME | WORKLOAD NO. OF PARTS | SURGE INDUCTION |
|---|---|---|---|
| 1 | 2239 | 82 | 261 |
| 2 | 911 | 157 | 261 |
| 3 | 766 | 187 | |
| 4 | 512 | 217 | |
| 5 | 482 | 213 | |
| 6 | 405 | 232 | |
| 7 | 446 | 231 | |
| 8 | 329 | 248 | |
| 9 | 351 | 242 | |

INDEP.

PART NO. 15178A

| RUN NO. | FLOW TIME | WORKLOAD NO. OF PARTS | SURGE INDUCTION |
|---|---|---|---|
| 1 | 738 | 286 | 286 |
| 2 | 388 | 289 | 286 |
| 3 | 387 | 291 | |
| 4 | 417 | 293 | |
| 5 | 313 | 288 | |
| 6 | 312 | 287 | |
| 7 | 351 | 290 | |
| 8 | 301 | 287 | |
| 9 | 299 | 287 | |

SET



PART NO. 15188A (?)  NOTE POSSIBLE ERRC. < WORKLOAD

| RUN NO. | FLOW TIME | NO. OF PARTS | SURGE INDUCTION |
|---|---|---|---|
| 1 | | | 0 (?) |
| 2 | | | |
| 3 | | | |
| 4 | | | |
| 5 | | | |
| 6 | | | |
| 7 | | | |
| 8 | | | |
| 9 | | | |

PART NO. 15189A

| RUN NO. | FLOW TIME | NO. OF PARTS | WORKLOAD SURGE INDUCTION |
|---|---|---|---|
| 1 | 1640 | 30 | 31 |
| 2 | 764 | 29 | 31 |
| 3 | 771 | 30 | |
| 4 | 698 | 30 | |
| 5 | 538 | 29 | |
| 6 | 513 | 29 | |
| 7 | 584 | 29 | |
| 8 | 509 | 29 | |
| 9 | 428 | 29 | |

SET

PART NO. 15191A

| RUN NO. | FLOW TIME | WORKLOAD NO. OF PARTS | SURGE INDUCTION |
|---|---|---|---|
| 1 | 1683 | 27 | 24 |
| 2 | 767 | 27 | 24 |
| 3 | 756 | 27 | |
| 4 | 661 | 26 | |
| 5 | 507 | 26 | |
| 6 | 486 | 27 | |
| 7 | 583 | 26 | |
| 8 | 459 | 26 | |
| 9 | 409 | 26 | |

PART NO. 15192A

| RUN NO. | FLOW TIME | WORKLOAD NO. OF PARTS | SURGE INDUCTION |
|---|---|---|---|
| 1 | 1712 | 19 | 18 |
| 2 | 802 | 19 | 18 |
| 3 | 762 | 19 | |
| 4 | 692 | 19 | |
| 5 | 532 | 19 | |
| 6 | 508 | 19 | |
| 7 | 618 | 19 | |
| 8 | 510 | 19 | |
| 9 | 418 | 19 | |

PART NO. 15236A

| RUN NO. | FLOW TIME | NO. OF PARTS | WORKLOAD SURGE INDUCTION |
|---|---|---|---|
| 1 | 805 | 44 | 47 |
| 2 | 633 | 45 | 47 |
| 3 | 632 | 45 | |
| 4 | 624 | 44 | |
| 5 | 518 | 45 | |
| 6 | 518 | 45 | |
| 7 | 588 | 45 | |
| 8 | 498 | 45 | |
| 9 | 486 | 44 | |

PART NO. 15237A

| RUN NO. | FLOW TIME | NO. OF PARTS | WORKLOAD SURGE INDUCTION |
|---|---|---|---|
| 1 | | | 0 (?) |
| 2 | | | |
| 3 | | | |
| 4 | | | |
| 5 | | | |
| 6 | | | |
| 7 | | | |
| 8 | | | |
| 9 | | | |

SET

PART NO. 15249A

| RUN NO. | FLOW TIME | NO. OF PARTS | WORKLOAD SURGE INDUCTION |
|---|---|---|---|
| 1 | 5572 | 27 | 297 |
| 2 | 3093 | 56 | 297 |
| 3 | 2361 | 91 | |
| 4 | 1843 | 121 | |
| 5 | 1870 | 116 | |
| 6 | 1482 | 143 | |
| 7 | 1520 | 147 | |
| 8 | 740 | 283 | |
| 9 | 1231 | 173 | |

PART NO. 15250A

| RUN NO. | FLOW TIME | NO. OF PARTS | WORKLOAD SURGE INDUCTION |
|---|---|---|---|
| 1 | 5891 | 33 | 309 |
| 2 | 2956 | 79 | 309 |
| 3 | 2377 | 110 | |
| 4 | 1805 | 158 | |
| 5 | 1819 | 147 | |
| 6 | 1489 | 179 | |
| 7 | 1438 | 196 | |
| 8 | 711 | 316 | |
| 9 | 1235 | 213 | |

SET WITH INDEPENDENT FIXTURES (1)

PART NO. 15025A WORKLOAD FY90

| RUN NO. | FLOW TIME | NO. OF PARTS | INDUCTION |
|---|---|---|---|
| 1 | 824 | 131 | 136 |
| 2 | 567 | 136 | 136 |
| 3 | 560 | 135 | 136 |
| 4 | 476 | 135 | 136 |
| 5 | 375 | 134 | 136 |
| 6 | 371 | 133 | 136 |
| 7 | 394 | 133 | 136 |
| 8 | 324 | 134 | 136 |
| 9 | 319 | 134 | 136 |

PART NO. 15113A WORKLOAD FY90

| RUN NO. | FLOW TIME | NO. OF PARTS | | INDUCTION |
|---|---|---|---|---|
| 1 | 995 | 124 | 92.5% | 134 |
| 2 | 699 | 127 | 94.8% | 134 |
| 3 | 695 | 127 | 94.8% | 134 |
| 4 | 630 | 128 | 95.5% | 134 |
| 5 | 473 | 129 | 96.3% | 134 |
| 6 | 477 | 129 | | 134 |
| 7 | 515 | 130 | 97.0% | 134 |
| 8 | 408 | 131 | 97.8% | 134 |
| 9 | 406 | 130 | 97.0% | 134 |

SET

PART NO. 15119A

| RUN NO. | FLOW TIME | NO. OF PARTS | WORKLOAD | INDUCTION |
|---|---|---|---|---|
| 1 | 1765 | 65 | 38.2 | 170 |
| 2 | 821 | 128 | 75.3 | 170 |
| 3 | 485 | 172 | 100% | 170 |
| 4 | 376 | 168 | 98.8 | 170 |
| 5 | 331 | 166 | 97.6 | 170 |
| 6 | 288 | 167 | 98.2 | 170 |
| 7 | 305 | 166 | 97.6 | 170 |
| 8 | 235 | 121 | 100 | 170 |
| 9 | 245 | 171 | 100 | 170 |

PART NO. 15321A

| RUN NO. | FLOW TIME | NO. OF PARTS | WORKLOAD | INDUCTION |
|---|---|---|---|---|
| 1 | 1522 | 74 | 46% | 161 |
| 2 | 812 | 130 | 80.7 | 161 |
| 3 | 478 | 163 | 100 | 161 |
| 4 | 322 | 163 | 100 | 161 |
| 5 | 328 | 161 | 100 | 161 |
| 6 | 283 | 164 | 100 | 161 |
| 7 | 311 | 166 | 100 | 161 |
| 8 | 233 | 164 | 100 | 161 |
| 9 | 242 | 164 | 100 | 161 |

SET

PART NO. 15126A

| RUN NO. | FLOW TIME | NO. OF PARTS | WORKLOAD | INDUCTION |
|---|---|---|---|---|
| 1 | 1254 | 111 | 63.4% | 175 |
| 2 | 268 | 120 | 97.1% | 175 |
| 3 | 257 | 169 | 96.6% | 175 |
| 4 | 262 | 170 | 97.1 | 125 |
| 5 | 203 | 120 | | 125 |
| 6 | 200 | 170 | | 125 |
| 7 | 221 | 170 | | 125 |
| 8 | 188 | 170 | | 125 |
| 9 | 185 | 170 | 97.1 | 125 |

PART NO. 15300A

| RUN NO. | FLOW TIME | NO. OF PARTS | WORKLOAD | INDUCTION |
|---|---|---|---|---|
| 1 | 1220 | 117 | 63.6% | 184 |
| 2 | 283 | 186 | 100% | 184 |
| 3 | 267 | 186 | | 184 |
| 4 | 268 | 186 | | 184 |
| 5 | 208 | 189 | | 184 |
| 6 | 203 | 189 | | 184 |
| 7 | 234 | 186 | | 184 |
| 8 | 190 | 189 | | 184 |
| 9 | 187 | 189 | | 184 |

SET

PART NO. 15136A

| RUN NO. | FLOW TIME | WORKLOAD NO. OF PARTS | | INDUCTION |
|---|---|---|---|---|
| 1 | 862 | 164 | 77.4 | 212 |
| 2 | 382 | 209 | 98.6 | 212 |
| 3 | 380 | 208 | 98.1 | 212 |
| 4 | 393 | 211 | 99.5 | 212 |
| 5 | 323 | 209 | 98.6 | 212 |
| 6 | 322 | 210 | 99.1 | 212 |
| 7 | 363 | 208 | 98.1 | 212 |
| 8 | 312 | 211 | 99.5 | 212 |
| 9 | 306 | 211 | 99.5 | 212 |

PART NO. 15137A

| RUN NO. | FLOW TIME | WORKLOAD NO. OF PARTS | | INDUCTION |
|---|---|---|---|---|
| 1 | 790 | 180 | 89.6 | 201 |
| 2 | 351 | 199 | 99.0 | 201 |
| 3 | 351 | 199 | 99.0 | 201 |
| 4 | 363 | 200 | 99.5 | 201 |
| 5 | 296 | 201 | 100% | 201 |
| 6 | 296 | 201 | 100% | 201 |
| 7 | 314 | 201 | 100% | 201 |
| 8 | 284 | 200 | 99.5 | 201 |
| 9 | 281 | 200 | 99.5 | 201 |

INDEP.

PART NO. 15140A

| RUN NO. | FLOW TIME | WORKLOAD NO. OF PARTS | | INDUCTION |
|---|---|---|---|---|
| 1 | 1436 | 72 | 67.9 | 106 |
| 2 | 408 | 104 | 98.1 | 106 |
| 3 | 401 | 105 | 99.1 | 106 |
| 4 | 324 | 105 | 99.1 | 106 |
| 5 | 286 | 106 | 100% | 106 |
| 6 | 274 | 106 | | 106 |
| 7 | 288 | 106 | | 106 |
| 8 | 232 | 107 | | 106 |
| 9 | 239 | 107 | 100% | 106 |

INDEP.

PART NO. 15150A

| RUN NO. | FLOW TIME | WORKLOAD NO. OF PARTS | | INDUCTION |
|---|---|---|---|---|
| 1 | 829 | 141 | 96.6% | 146 |
| 2 | 536 | 142 | 97.3 | 146 |
| 3 | 557 | 141 | 96.6% | 146 |
| 4 | 475 | 145 | 99.3 | 146 |
| 5 | 369 | 145 | 99.3 | 146 |
| 6 | 368 | 144 | 98.6 | 146 |
| 7 | 402 | 144 | 98.6 | 146 |
| 8 | 324 | 145 | 99.3 | 146 |
| 9 | 326 | 145 | 99.3 | 146 |

INDEP.

PART NO. 15175A

| RUN NO. | FLOW TIME | WORKLOAD NO. OF PARTS | | INDUCTION |
|---|---|---|---|---|
| 1 | 1016 | 82 | 54.3 | 151 |
| 2 | 521 | 135 | 89.4 | 151 |
| 3 | 467 | 144 | 95.4 | 151 |
| 4 | 432 | 145 | 96.0 | 151 |
| 5 | 365 | 148 | 98.0 | 151 |
| 6 | 350 | 149 | 98.7 | 151 |
| 7 | 386 | 146 | 96.7 | 151 |
| 8 | 317 | 149 | 98.7 | 151 |
| 9 | 318 | 150 | 99.3 | 151 |

INDEP.

PART NO. 15178A

| RUN NO. | FLOW TIME | WORKLOAD NO. OF PARTS | INDUCTION |
|---|---|---|---|
| 1 | 465 | 180 | 177 |
| 2 | 358 | 178 | 177 |
| 3 | 361 | 178 | 177 |
| 4 | 382 | 179 | 177 |
| 5 | 311 | 178 | 177 |
| 6 | 311 | 178 | 177 |
| 7 | 336 | 178 | 177 |
| 8 | 299 | 178 | 177 |
| 9 | 299 | 178 | 177 |

100%

PART NO. 15188A

| RUN NO. | FLOW TIME | WORKLOAD NO. OF PARTS | WORKLOAD INDUCTION |
|---|---|---|---|
| 1 | 0 | 0 | 0 |
| 2 | 0 | 0 | 0 |
| 3 | 0 | 0 | 0 |
| 4 | 0 | 0 | 0 |
| 5 | 0 | 0 | 0 |
| 6 | 0 | 0 | 0 |
| 7 | 0 | 0 | 0 |
| 8 | 0 | 0 | 0 |
| 9 | 0 | 0 | 0 |

PART NO. 15189A

| RUN NO. | FLOW TIME | WORKLOAD NO. OF PARTS | WORKLOAD INDUCTION |
|---|---|---|---|
| 1 | 992 | 19 | 19 |
| 2 | 730 | 19 | 19 |
| 3 | 731 | 18 | 19 |
| 4 | 653 | 18 | 19 |
| 5 | 498 | 20 | 19 |
| 6 | 502 | 20 | 19 |
| 7 | 528 | 20 | 19 |
| 8 | 450 | 20 | 19 |
| 9 | 434 | 20 | 19 |

100%

SET

PART NO. 15191A WORKLOAD

| RUN NO. | FLOW TIME | NO. OF PARTS | INDUCTION |
|---|---|---|---|
| 1 | 967 | 17 | 16 |
| 2 | 703 | 17 | 16 |
| 3 | 732 | 17 | 16 |
| 4 | 660 | 17 | 16 |
| 5 | 479 | 17 | 16 |
| 6 | 489 | 17 | 16 |
| 7 | 531 | 17 | 16 |
| 8 | 417 | 18 | 16 |
| 9 | 403 | 18 | 16 |

100%

PART NO. 15192A WORKLOAD

| RUN NO. | FLOW TIME | NO. OF PARTS | INDUCTION |
|---|---|---|---|
| 1 | 1062 | 13 | 12 |
| 2 | 764 | 13 | 12 |
| 3 | 755 | 12 | 12 |
| 4 | 657 | 13 | 12 |
| 5 | 520 | 13 | 12 |
| 6 | 505 | 13 | 12 |
| 7 | 532 | 13 | 12 |
| 8 | 423 | 12 | 12 |
| 9 | 414 | 12 | 12 |

100%

PART NO. 15236A

| RUN NO. | FLOW TIME | WORKLOAD NO. OF PARTS | WORKLOAD INDUCTION |
|---|---|---|---|
| 1 | 784 | 24 | 23 |
| 2 | 618 | 24 | 23 |
| 3 | 617 | 24 | 23 |
| 4 | 632 | 24 | 23 |
| 5 | 510 | 23 | 23 |
| 6 | 515 | 23 | 23 |
| 7 | 561 | 23 | 23 |
| 8 | 478 | 23 | 23 |
| 9 | 484 | 23 | 23 |

100%

PART NO. 15237A

| RUN NO. | FLOW TIME | WORKLOAD NO. OF PARTS | WORKLOAD INDUCTION |
|---|---|---|---|
| 1 | 0 | 0 | 0 |
| 2 | 0 | 0 | 0 |
| 3 | 0 | 0 | 0 |
| 4 | 0 | 0 | 0 |
| 5 | 0 | 0 | 0 |
| 6 | 0 | 0 | 0 |
| 7 | 0 | 0 | 0 |
| 8 | 0 | 0 | 0 |
| 9 | 0 | 0 | 0 |

SET

PART NO. 15249A

| RUN NO. | FLOW TIME | WORKLOAD NO. OF PARTS | | INDUCTION |
|---|---|---|---|---|
| 1 | 2808 | 40 | 22% | 182 |
| 2 | 1474 | 73 | 40.1 | 182 |
| 3 | 1183 | 89 | 48.9 | 182 |
| 4 | 903 | 116 | 63.7 | 182 |
| 5 | 920 | 112 | 61.5 | 182 |
| 6 | 729 | 143 | 78.6 | 182 |
| 7 | 735 | 144 | 79.1 | 182 |
| 8 | 361 | 177 | 97.2 | 182 |
| 9 | 588 | 178 | 97.8 | 182 |

PART NO. 15250A

| RUN NO. | FLOW TIME | WORKLOAD NO. OF PARTS | | INDUCTION |
|---|---|---|---|---|
| 1 | 2902 | 47 | 24.1 | 195 |
| 2 | 1456 | 90 | 46.2 | 195 |
| 3 | 1185 | 111 | 56.9 | 195 |
| 4 | 908 | 146 | 74.9 | 195 |
| 5 | 911 | 142 | 72.8 | 195 |
| 6 | 725 | 183 | 93.8 | 195 |
| 7 | 739 | 179 | 91.8 | 195 |
| 8 | 359 | 198 | 100% | 195 |
| 9 | 596 | 198 | 100% | 195 |

# OC-ALC/MABPAB SHEET METAL SHOP DRAFT RECOMMENDATIONS

| RECOMMENDATION TYPE | POTENTIAL BENEFIT(S) |
|---|---|
| FOCUS STUDY | QUEUE REDUCTION BY IMPLEMENTING A MATERIAL CONTROL (PULL-APPROACH). |
| QUICK FIX | IMPROVE SPACE UTILIZATION BY CONSOLIDATING SUPERVISORS' OFFICES. |
| FOCUS STUDY | IMPLEMENT A "STAND-ALONE" SHEET METAL CONCEPT BY INCORPORATING BACKSHOP OPERATIONS. |
| QUICK FIX | REDUCTION OF TRAVEL TIME & DISTANCE ON END ITEMS BY IMPLEMENTING A MOBILE TAGGING UNIT. |
| FOCUS STUDY | INCREASE PAINTING CAPACITY BY DEVELOPING A VERTICAL-PAINTING PROCESS. |
| QUICK FIX | INCREASE STORAGE CAPACITY BY USING VERTICAL SPACE. |
| QUICK FIX | IMPROVE FLOW DAYS BY IMPLEMENTING COLOR TAGGING PARTS. |
| QUICK FIX | <u>TOOLING</u><br>• IMPROVE ACCURACY & MINIMIZE TIME FOR WEIGHT & BALANCE OPERATION ON FLIGHT CONTROL USING AN ELECTRONIC DEVICE.<br>$CO_2$ SANDING VS. BRUSH SANDING. |

# #1 - PRIORITY

2.1 FOCUS STUDY - OPPORTUNTITY TO PROVIDE THE OPTIMUM LAYOUT FOR SHEET METAL OPERATIONS IN BLDG. # 2101
AT OC

2.1.1 DESCRIPTION OF CURRENT OPERATION

OPERATIONS ARE NOW LOCATED IN BLDG #95 WHICH IS TO BE VACATED BY SEPT. '89. SHEET METAL REFURBISHING IS PERFORMED ON COWLING, FLAPS, FLIGHT CONTROLS, DOORS AND MISC. STRUCTURES.

2.1.2 OVERALL ASSESSMENT OF CURRENT OPERATION

CURRENT OPERATIONS ARE CONJESTED AND THE FLOW of PARTS DOES NOT CONFORM TO ANY TYPE of SYSTEMATIC PROGRESSION.

2.1.2.1 CURRENT PROCESS PROBLEMS

MATRIAL HANDLING - EXCESSIVE
TOOLING LAYOUTS CAUSES OPRRATION INTRRFERENCES
WORK STATION LAYOUTS - NOT EFFICIENT
STAGING AREAS NOT IN LINE OF FLOW.
AIR AND UTILITIES LOCATIONS - INADEQUATE

2.1.2.2 SHOP ORGANIZATION

TOTAL REORGANIZATION OF OFFICE SUPPORT, RECEIVING STORES, SHIPPING AND OPRRATIONS

2.1.3 RATIONALE LEADING TO CHANGE

OBSERVATIONS INDICATE POOR FLOW, CONJESTED AREAS, EXCESSIVE MATREIAL HANDLING THAT CAN BE RESOLVED WITH THE APPLICATION OF GENERAL I.E. PLANT LAYOUT PRINCIPLES

2.1.3.1 SUPPORTING DATA -PROFILES -MODEL -GENERAL KNOWLEDGE

2.1.4 DESCRIPTION OF NEW PROCESS

(See ATTACHMENT)

- PRODUCTIVITY IMPROVEMENTS

A 15 TO 20 % INCREASE IN PRODUCTIVITY IS ANTICIPATED

- RESOURCE UTILIZATION

MORE EFFICIENT FLOOR SPACE UTILIZATION BY REDUCING THE PRESENT 105,000 SQ.FT. TO 61,000 SQ.FT.

- FLEXIBILITY

CONSOCIATED AREAS WILL ACCOMMODATE THE VARIATIONS IN PRODUCTION REQUIREMENTS

(BLDG #95 - RELOCATION)

2.1.4 DESCRIPTION OF NEW PROCESS

AN ORGANIZED IE EFFORT WILL BE DIRECTED TOWARD THE ESTABLISHMENT OF THE OPTIMUM LAYOUT FOR SHEET METAL OPERATIONS IN BLDG. #2102 BY:

- DEVELOPING A DETAILED PRODUCT FLOW ANALYSIS
- PROVIDING COMPLETE OPERATIONAL ANALYSES FOR ALL TASKS
- RE-DESIGN OF WORK STATION LAYOUTS
- TOOLING EVALUATIONS & LAYOUTS
- PROPER LOCATIONS OF AIR & UTILITIES.
- DESIGNATED STORES AREAS
  " IN PROCESS STORAGES AREAS
  " STAGING AREAS
- EVALUATION & RECOMMENDATION OF MORE EFFICIENT MATERIAL HANDLING EQUIPMENT
- CONSOLIDATED RECEIVING AREA
- CONSOLIDATED SHIPPING AREA
- ESTABLISHMENT AND LOCATION OF AN INCOMING RECEIVING INSPECTION AREA FOR VENDOR PARTS

(BLDG #95 RE-LOCATION)

2.1.5. BENEFITS/TRADE-OFFS

MORE EFFICIENT OPERATIONS AND A 40% REDUCTION IN REQUIRED FLOOR SPACE.

- DOLLAR SAVINGS

COST BENEFIT ANALYSIS

IT IS ANTICIPATED A 15% REDUCTION IN LABOR REQUIREMENTS WILL BE REALIZED.

- INTANGIBLE SAVINGS

MORE ORGANIZED OPERATIONS

BETTER SCHEDULING OVERVIEW

MORE ON TIME DELIVERIES

2.1.6 IMPLEMENTATION COST/SCHEDULE

I.E. REQUIREMENT-IS 3000 MAN HOURS

NOTE: IF IMPLEMENTATION ASSISTANCE IS REQUIRED AN ADDITIONAL 1000 I.E. MAN HOURS WOULD BE REQUIRED.

- IMPACT

MINIMAL - BY IMPLEMENTING A SEQUENTIAL SCHEDULE OF SEGMENTED MOVES.

2.1.7 SAFETY IMPROVEMENTS

ELIMINATION OF MATERIAL HANDLING HAZARDS.

2.1.8 ENVIRONMENTAL HAZARDS/IMPROVEMENTS

ENVIRONMENTALLY CONTROLLED PAINT OPERATION

2.1.9 RELIABILITY / MAINTAINABILITY CHARACTERISTICS

NOW/APPLICABLE

2.1.10 HUMAN FACTORS DESIGN CRITERIA

LESS FATIGUE THROUGH BETTER WORK PLACE LAYOUT & MORE EFFECTIVE MATERIAL HANDLING.

| ALC | RCC | TYPE | POTENTIAL BENEFIT(S) |
|---|---|---|---|
| OC | MABPAB | FS | QUEUE REDUCTION by implementing A MATERIAL CONTROL (pull-approach) |
| OC | MABPAB | QF | Improve space utilization by consolidating SUPERVISORS OFFICE |
| OC | MABPAB | FS | Implement A "STAND-ALONE" SHEET METAL CONCEPT by incorporating back shop operations |
| OC | MABPAB | QF | REDUCTION OF TRAVEL TIME & DISTANCE ON END ITEMS by Implementing A MOBILE-TAGGING UNIT. |
| OC | MABPAB | FS | INCREASE PAINTING CAPACITY by developing A VERTICAL-PAINTING process. |
| OC | MABPAB | QF | INCREASE STORAGE CAPACITY USING Vertical space. |
| OC | MABPAB | QF | IMPROVE FLOW DAYS by implementing Color Tagging Parts. |
| OC | MABPAB | QF | "Tooling": • IMPROVE ACCURACY & minimize TIME OF weight & BALANCE operation on Flight Control using AN Electronic DIVICE. • $CO_2$ SANDING VS. Brush SANDING |

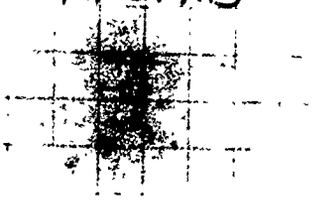

R Bofanes

DEPARTMENT OF THE AIR FORCE
HEADQUARTERS OKLAHOMA CITY AIR LOGISTICS CENTER (AFLC)
TINKER AIR FORCE BASE OKLAHOMA 73145-

REPLY TO ATTN OF: MAW (TI) 19 Jan 89

SUBJECT: RCC Workload Data To Support Technology Insertion (TI)

TO: MABE

1. McDonnell Douglas has requested that the attached ~~part~~ control numbers for each identified RCC be reviewed to verify that they do infact account for 80 percent of the workload for that RCC. It has alos been requeted that the columns on the attached forms be filled in to reflect the workload for FY88 per quarter.

2. This information needs to be provided ASAP so that it may be telefaxed to McDonnell Douglas in St. Louis.

GENE W. LEITERMAN
OC-ALC TI Program Manager

1 Atch
Listing

BS
m 20/1

[illegible] BRANCH
[illegible] 1-23
[illegible]
✓ [illegible]
[illegible]
[illegible]
[illegible]
[illegible]
MABE STAFF

COMBAT STRENGTH THROUGH LOGISTICS

| | MAEFAB | MABPAB LABOR ETC | FY 89 WORKLOAD BY QUARTER ★ 1st # UNITS | 2nd # UNITS | 3rd # UNITS | 4th # UNITS |
|---|---|---|---|---|---|---|
| 1 | 15073 | 163.5 | 56 | 55 | 54 | 75 |
| 2 | 15113 | 155.7 | 60 | 60 | 53 | 70 |
| 3 | 15150 | 92.4 | 25 | 25 | 29 | 66 |
| 4 | 15189 | 193.9 | 13 | 15 | 15 | 17 |
| 5 | 15178 | 193.9 | 13 | 13 | 15 | 17 |
| 6 | 15144 | 201.9 | 11 | 11 | 16 | 17 |
| 7 | 15190 | 110.5 | 13 | 18 | 23 | 20 |
| 8 | 15249 | 110.5 | 13 | 14 | 21 | 20 |
| 9 | 15192 | 201.8 | 6 | 6 | 10 | 17 |
| 10 | 15200 | 98.3 | 13 | 16 | 20 | 20 |
| 11 | 15136 | 79.2 | 13 | 19 | 23 | 32 |
| 12 | 15121 | 90.2 | 13 | 16 | 20 | 20 |
| 13 | 15176 | 88.7 | 13 | 16 | 20 | 20 |
| 14 | 15119 | 89.8 | 13 | 16 | 20 | 20 |
| 15 | 15137 | 79.2 | 13 | 16 | 23 | 21 |
| 16 | 15~~14~~175 | 74.9 | 25 | 12 | 8 | 26 |
| 17 | 15179 | 84.0 | 36 | 50 | 59 | 75 |
| 18 | 15236 | 149.6 | 6 | 10 | 9 | 9 |
| 19 | 15140 | 58.7 | 1 | 0 | 4 | 40 |

★ IAW A-G0190-CAA-CA-MCE
DATED 16 JUN 1988

DEPARTMENT OF THE AIR FORCE
HEADQUARTERS AIR FORCE LOGISTICS COMMAND
WRIGHT-PATTERSON AIR FORCE BASE, OHIO 45433 5001

TI library file

21 OCT 1988

REPLY TO ATTN OF: MAQF

SUBJECT: Surge Factors for Technology Insertion (TI) Program

TO: Mr Dave Szukalski
McDonnell Douglas Corp
St Louis MO 63166-0516

1. The weapon systems surge factors to be used in the TI program are provided in attachment 1. For some weapon system subsystems you may need to contact the TI center representative to obtain a further surge factor breakdown.

2. If additional information is required, please contact myself or Trixie Brown at 513-257-7277.

DOXIE L. CRIPE
Chief, Facilities & Equipment Div

1 Atch
Surge Factors

cc: TI Working Group Members
WPCC/PMRP (Don Peterson)

UNITED STATES AIR FORCE
SEPTEMBER 18, 1947

OCT 21 '88 16:05 2750DAAC P02

19 OCT 1988

| MDS | FY 89 SURGE % | FY90 SURGE % |
|---|---|---|
| A-7D | 87 | 99 |
| A-7K | 68 | 66 |
| TOTAL | 86 | 96 |
| A-10A | 39 | 24 |
| B-1B | 3 | -5 |
| B-52G | 134 | 186 |
| B-52H | 128 | -10 |
| TOTAL | 132 | 115 |
| C-5A | 656 | 695 |
| C-5B | 549 | 488 |
| TOTAL | 612 | 597 |
| C-7 | 0 | 0 |
| C-9A | -11 | 45 |
| C-9C | 0 | 0 |
| TOTAL | -10 | 42 |
| C-12A | 0 | 0 |
| C-12F | -96 | 124 |
| C-12J | 0 | 0 |
| TOTAL | -82 | 104 |
| C-18A | 0 | 0 |
| C-20A | 0 | 0 |
| C-20B | 0 | 0 |
| C-20C | 0 | 0 |
| TOTAL | | 0 |
| C-21A | -96 | 69 |

| | | |
|---|---|---|
| C-22A | 0 | 0 |
| C-22B | | 0 |
| TOTAL | 0 | 0 |
| | | |
| C-23A | -100 | 218 |
| | | |
| C-47A | 0 | 0 |
| | | |
| C-130A | -61 | -18 |
| C-130B | 218 | 187 |
| C-130E | 123 | 133 |
| C-130H | 146 | 209 |
| TOTAL | 93 | 159 |
| | | |
| C-131D | 0 | 0 |
| C-131E | 0 | 0 |
| TOTAL | 0 | 0 |
| | | |
| C-135A | 0 | 0 |
| C-135B | 0 | 0 |
| C-135C | 0 | 0 |
| C-135E | 0 | 0 |
| TOTAL | 0 | 0 |
| | | |
| C-137B | 0 | 0 |
| C-137C | 0 | 0 |
| TOTAL | 0 | 0 |
| | | |
| C-140A | 51 | 29 |
| | | |
| C-141A | 0 | 0 |
| C-141B | 249 | 247 |
| TOTAL | 248 | 246 |
| | | |
| E-3A | | 99 |
| E-3B | 122 | 122 |
| E-3C | 124 | 124 |
| TOTAL | 122 | 110 |

| | | |
|---|---|---|
| E-4B | 0 | 0 |
| F-4A | | 0 |
| F-4C | -53 | 0 |
| F-4D | 45 | -43 |
| F-4E | 84 | 60 |
| F-4G | 81 | 81 |
| TOTAL | 64 | 39 |
| F-5E | 0 | 0 |
| F-5F | 0 | 0 |
| TOTAL | 0 | 0 |
| F-15A | 89 | 63 |
| F-15B | 24 | 29 |
| F-15C | 61 | 62 |
| F-15D | 55 | 66 |
| F-15E | 0 | 69 |
| TOTAL | 65 | 61 |
| F-16A | 68 | 41 |
| F-16B | 20 | 31 |
| F-16C | 48 | 28 |
| F-16D | 56 | 22 |
| TOTAL | 55 | 33 |
| F-111A | 67 | 55 |
| F-111D | 66 | 65 |
| F-111E | 89 | 76 |
| F-111F | 86 | 80 |
| TOTAL | 78 | 71 |
| AC-130A | 202 | 237 |
| AC-130H | 231 | 257 |
| AC-130U | | 0 |
| TOTAL | 220 | 238 |
| CH-003E | 17 | 0 |
| CH-053A | 162 | 0 |

| | | |
|---|---|---|
| EC-018R | 0 | 0 |
| | | |
| EC-130E | 250 | 241 |
| EC-130H | 320 | 244 |
| TOTAL | 290 | 243 |
| | | |
| EC-135A | 37 | 0 |
| EC-135C | 1 | 0 |
| EC-135E | 0 | 0 |
| EC-135G | 56 | 0 |
| EC-135H | 225 | 225 |
| EC-135J | 159 | 159 |
| EC-135K | 147 | 104 |
| EC-135L | 46 | 0 |
| EC-135P | 225 | 225 |
| EC-135Y | 0 | 188 |
| TOTAL | 55 | 50 |
| | | |
| EF-111A | 196 | 176 |
| | | |
| FB-111A | 0 | -61 |
| | | |
| HC-130H | 130 | 162 |
| HC-130N | 135 | 116 |
| HC-130P | 119 | 110 |
| TOTAL | 123 | 119 |
| | | |
| HH-001H | -44 | -15 |
| | | |
| HH-003E | 48 | 72 |
| | | |
| HH-053B | 0 | 0 |
| | | |
| HH-53C | 0 | 0 |
| | | |
| KC-10A | -44 | 484 |
| | | |
| KC-135A | 251 | 220 |
| KC-135E | 288 | 279 |

| | | |
|---|---|---|
| WC-135B | -7 | -7 |
| NKC-135A | 0 | 0 |
| NKC-135E | 0 | 0 |
| TOTAL | 0 | 0 |

| | | |
|---|---|---|
| KC-135Q | 408 | 400 |
| KC-135R | 234 | 277 |
| TOTAL | 268 | 265 |
| | | |
| LC-130H | 23 | -7 |
| | | |
| MC-130E | 120 | 127 |
| MC-130H | 153 | 108 |
| TOTAL | 126 | 120 |
| | | |
| MH-053H | 0 | 0 |
| MH-053J | 0 | 107 |
| TOTAL | 0 | 101 |
| | | |
| MH-60G | | 69 |
| | | |
| NA-037E | 0 | 0 |
| | | |
| NC-130H | 0 | 0 |
| | | |
| OA 10A | | 16 |
| | | |
| OA-37B | 81 | 52 |
| | | |
| OV-10A | 113 | 117 |
| TOTAL | 77 | 117 |
| | | |
| RC-135S | 44 | 44 |
| RC-135U | 38 | 38 |
| RC-135V | 44 | 44 |
| RC-135W | 74 | 74 |
| RC-135X | 0 | 0 |
| TOTAL | 50 | 50 |
| | | |
| RF-004C | 114 | 114 |
| | | |
| UH-001N | | -10 |
| | | |
| UH-060A | 73 | 78 |
| | | |
| WC-130B | 0 | 0 |
| WC-130E | 32 | 32 |
| WC-130H | 188 | 188 |
| TOTAL | 81 | 81 |

# MODEL EXPERIMENTATION

# PROBLEM APPROACH

1. FLOW TIME IS THE QUALITY CHARACTERISTIC WE ARE TRYING TO IMPROVE (MINIMIZE).

2. BRAIN STORM FOR PHYSICAL FACTORS THAT EFFECT FLOW TIME. APPLY NO CONSTRAINTS-PREPARE LIST.

3. APPLY 1st BOUNDARY CONDITION. IS THE FACTOR TRIVIAL IN AN ENGINEERING SENSE? REDUCE LIST.

4. APPLY 2nd BOUNDARY CONDITION. IS THE FACTOR AVAILABLE IN THE SIMULATION? REDUCE LIST.

5. DIVIDE REMAINING FACTORS INTO CONTROL FACTORS AND NOISE FACTORS.

6. DISCUSS/IDENTIFY INTERACTIONS AND LEVELS FOR:
   A. CONTROL FACTORS
   B. NOISE FACTORS

7. DEFINE DEGREES OF FREEDOM AND REQUIRED LINEAR GRAPHS FOR:
   A. CONTROL FACTORS
   B. NOISE FACTORS

8. SELECT PROPER ORTHOGONAL ARRAY AND ASSIGN COLUMNS FOR:
   A. CONTROL FACTORS
   B. NOISE FACTORS

9. COORDINATE THE RESULTING TEST MATRIX WITH SOUTHWEST RESEARCH.

# PROBLEM APPROACH (CONT.)

10. EXECUTE MODEL THROUGH THE TEST MATRIX.

11. INTERPRET RESULTS.

12. CONFIRM PREDICTIONS BY RUNNING MODEL WITH THE SELECTED VALUES.

# WARNER ROBINS
# GYRO OVERHAUL FACILITY
## BRAINSTORMING RESULTS

Quality Characteristic — Minimize FLOW TIME (includes Throughput)

Control Factors:

1. PEOPLE/SKILL LEVEL
   includes People, Skill, Training, Cross Training, Grade Structure.
2. EQUIPMENT
   includes Equipment, Tools.
3. FLOATING STOCK
   includes Materials.
4. CALIBRATION/MAINTENANCE OF TEST EQUIPMENT
   includes MTTF, Down Time.

Noise Factors:

1. NO. OF PARTS TO BE WORKED
   includes Assets, Workload Fluctuation.
2. RECEIVING/SELL DATES
   includes Shipping/handling.

# WARNER ROBINS
# GYRO OVERHAUL FACILITY
# EXAMPLE

| RUN NO. | PEOPLE /SKILL | EQUIPMENT | NO. OF PARTS TO BE WORKED: FLOATING STOCK | CALIBRATION/ MAINTENANCE OF TEST EQUIPMENT | 1 | 2 | 1 | 2 | SIGNAL TO NOISE RATIO (db) |
|---|---|---|---|---|---|---|---|---|---|
| | | | REC./SELL TIME | | 1 | 1 | 2 | 2 | |
| | | | | | | FLOW | TIME | | |
| 1 | 1 | 1 | 1 | 1 | | | | | |
| 2 | 1 | 2 | 2 | 2 | | | | | |
| 3 | 1 | 3 | 3 | 3 | | | | | |
| 4 | 2 | 1 | 2 | 3 | | | | | |
| 5 | 2 | 2 | 3 | 1 | | | | | |
| 6 | 2 | 3 | 1 | 2 | | | | | |
| 7 | 3 | 1 | 3 | 2 | | | | | |
| 8 | 3 | 2 | 1 | 3 | | | | | |
| 9 | 3 | 3 | 2 | 1 | | | | | |

# MODEL EXAMPLE (CONT.)

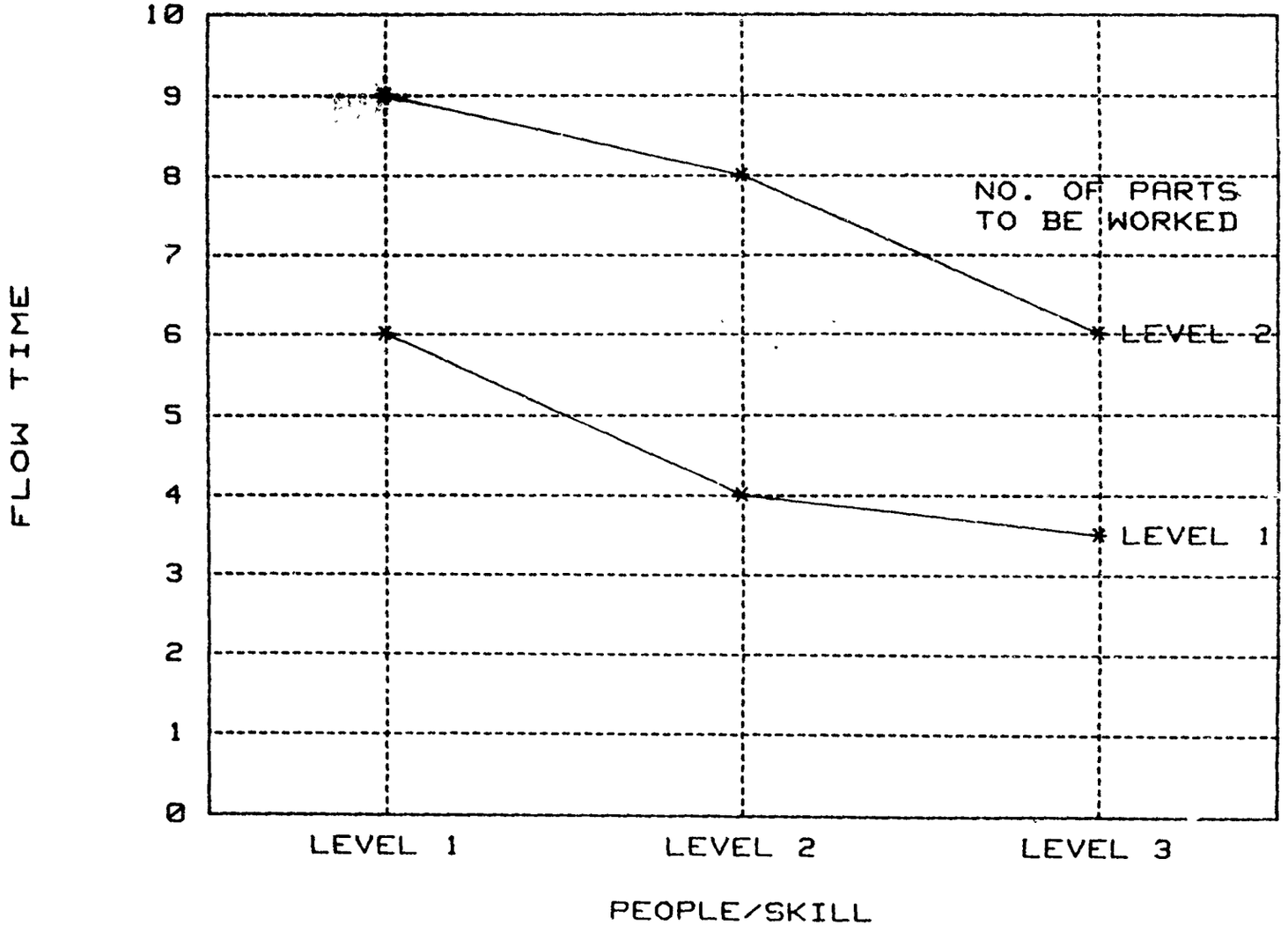

R Bolduan

# OC-ALC/MAB

## TECHNOLOGY INSERTION

## AND

## PRODUCTION PROCESS REVIEW

# MAB TECHNOLOGY INSERTION TEAM

## POINT OF CONTACT

| | | |
|---|---|---|
| EARL STAMPS | MABEFS | 65267 |

## PLANNING

| | | |
|---|---|---|
| LARRY MULLINAX | MABEFS | 65261 |
| ROGER MODELL | MABEFS | 65265 |

## PRODUCTION

| | | |
|---|---|---|
| JANIS WOOD | MABPAB (-135) | 63595 |
| TERRY BREWER | MABPAB (-135) | 63595 |
| IDA M. GRAVES | MABPFF (B52) | 63860 ✔ |
| DONNA MASON | MABPFF (B52) | 63860 |

## SCHEDULING

| | | |
|---|---|---|
| DARRELL TANNER | MABSFS (B52) | 62969 |
| PAT HANCOCK | MABSFS | 67235 |

## ENGINEERING

| | | |
|---|---|---|
| DON HRNCIR | MABEE (FACILITIES) | 67757 |
| PHIL KUERNER | MABEP (TOOLING) | 65986 |

## QUALITY

| | | |
|---|---|---|
| TED HAYES | MAQBF (-135) | 62390 |
| JACKIE LENDERMAN | MAQBBA (B52) | 67322 |

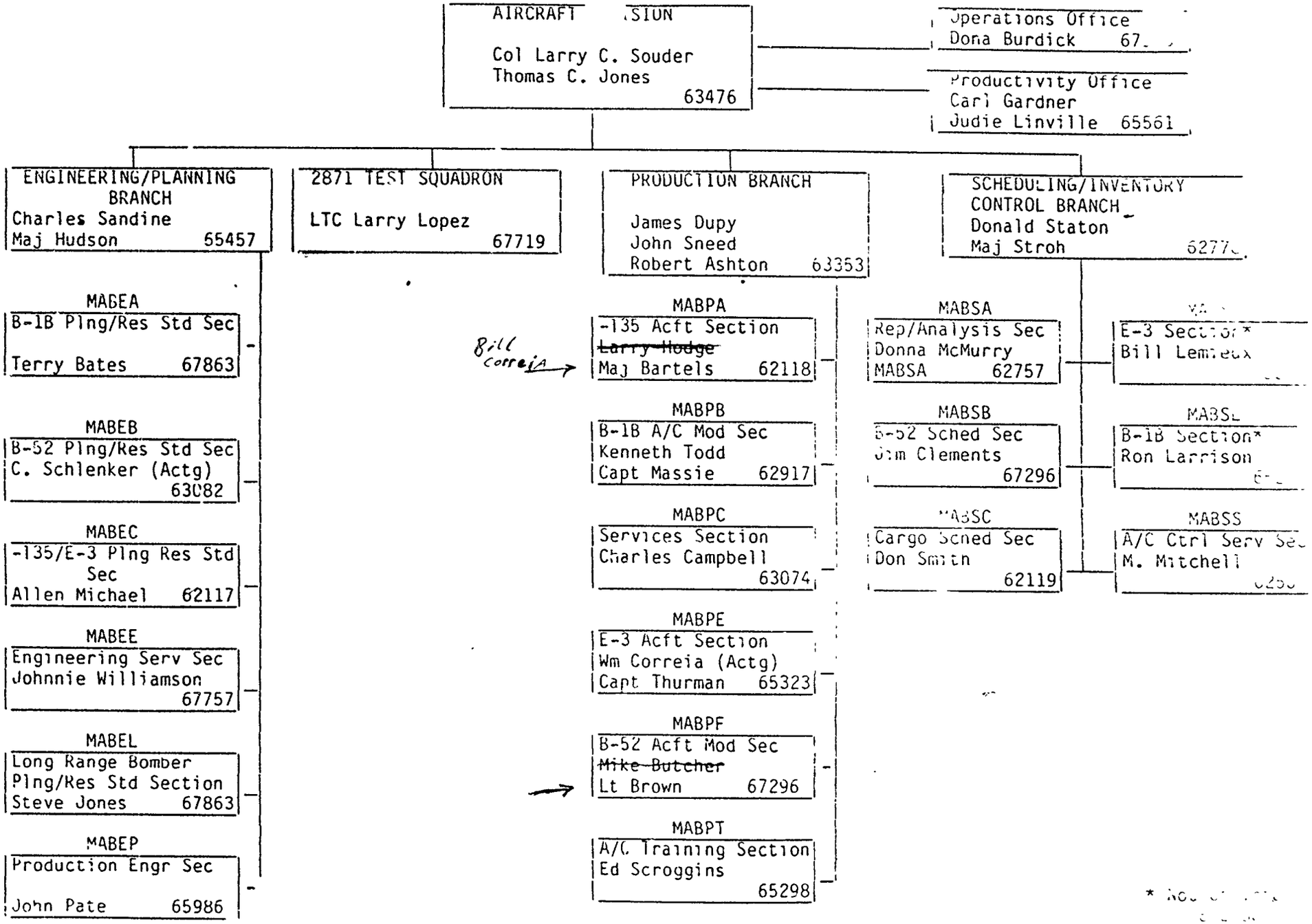
AIRCRAFT SION
Col Larry C. Souder
Thomas C. Jones
63476
Operations Office
Dona Burdick 67
Productivity Office
Carl Gardner
Judie Linville 65561
ENGINEERING/PLANNING BRANCH
Charles Sandine
Maj Hudson 65457
2871 TEST SQUADRON
LTC Larry Lopez
67719
PRODUCTION BRANCH
James Dupy
John Sneed
Robert Ashton 63353
SCHEDULING/INVENTORY CONTROL BRANCH
Donald Staton
Maj Stroh 6277
MABEA
B-1B Plng/Res Std Sec
Terry Bates 67863
MABEB
B-52 Plng/Res Std Sec
C. Schlenker (Actg)
63082
MABEC
-135/E-3 Plng Res Std Sec
Allen Michael 62117
MABEE
Engineering Serv Sec
Johnnie Williamson
67757
MABEL
Long Range Bomber Plng/Res Std Section
Steve Jones 67863
MABEP
Production Engr Sec
John Pate 65986
MABPA
-135 Acft Section
~~Larry Hodge~~
Maj Bartels 62118
Bill Correia
MABPB
B-1B A/C Mod Sec
Kenneth Todd
Capt Massie 62917
MABPC
Services Section
Charles Campbell
63074
MABPE
E-3 Acft Section
Wm Correia (Actg)
Capt Thurman 65323
MABPF
B-52 Acft Mod Sec
~~Mike Butcher~~
Lt Brown 67296
MABPT
A/C Training Section
Ed Scroggins
65298
MABSA
Rep/Analysis Sec
Donna McMurry
MABSA 62757
MABSB
B-52 Sched Sec
Jim Clements
67296
MABSC
Cargo Sched Sec
Don Smith
62119
E-3 Section*
Bill Lemieux
MABSL
B-1B Section*
Ron Larrison
MABSS
A/C Ctrl Serv Sec
M. Mitchell

* No

MABPAB - EARL STAMPS (UNIT CHIEF)
SHEET METAL C-135
R. BOLANOS / T. HALL

**Activitie. Checklist**

D = Delegated for Action

| FOLDER # | % Comp | Priority A | B | C | OK | Activity | Delegated to | D | Start Date | Due Date |
|---|---|---|---|---|---|---|---|---|---|---|
| 1 | 100% | | | ✓ | ✓ | ENVELOP SIZE/VOL CU.FT. | R.B | ✓ | 4/7 | 4/7 |
| 2 | 80% | | | ✓ | | ITEM CHECK LIST | R.B. | ✓ | 4/7 | 4/14 |
| 3 | 80% | | | ✓ | | ITEM SUMMARY | R.B. | ✓ | 4/7 | 4/14 |
| 4 | 80% | | | ✓ | | RCC CHECK LIST | R.B | ✓ | 4/7 | 4/14 |
| 5 | 95% | ✓ | | | | OPERATION - MATCH W/ FLOW PROCESS<br>- EQUIPMENT<br>- TSP TIMES<br>- MANO. FLOW TIME (HRS)<br>- SKILL LEVEL (MIN. REQ.) | T.H | ✓ | 4/3 | 4/12 |
| 6 | 100% | ✓ | | | | MANPOWER - QTY<br>- HRS<br>- ALT. SKILL CODE | E.S/T.D. | ✓ | 4/7 | 4/12 |
| 7 | 100% | ✓ | | | | WORKLOAD - FLOWING STOCK<br>- ACT PROD by QTR<br>- MAX W.I.P<br>- STD HRS | L.M | ✓ | 4/7 | 4/12 |
| 8 | 90% | ✓ | | | | EQUIPMENT - PREV. MAINT.<br>- BREAKD. IN<br>- % USED by OTHER<br>- ALTERNATIVE | L.M | ✓ | 4/6 | 4/13 |
| 9 | 100% | ✓ | | | | DISASSEMBLE / ASSEMBLE | R.B. | ✓ | 4/7 | 4/10 |
| 10 | 100% | ✓ | | | | PARALLEL | R.B. | ✓ | 4/7 | 4/10 |
| 11 | 16% | | ✓ | | | IN DATES | E.S | ✓ | 4/7 | 6/7 |
| 12 | 16% | | ✓ | | | OUT DATES | E.S. | ✓ | 4/7 | 6/7 |
| 13 | | | ✓ | | | IE ASSESSMENT | R.B/T.H. | | 4/3 | ON GOING |

TS-form 1108/ © Copyright 1981 88 by Time/system® International Denmark Time/Design™ U.S. and Canada All rights reserved

- TEAM EFFORT
- CLIENT OWNERSHIP
- ROAD MAP
- CLEAR COMMUNICATION

THE TEAM:

EARL STAMPS (ALC / PLNG UNIT. CHIEF)
LARRY MULLINAX (ALC / SR. PLNG ENG.)
JIM DOTSON (ALC / PLNG ENG)
TIM HALL (MDMSC / CPI)
RICARDO BOLANOS (MDMSC / PROJ. LEADER)

**1989 Project Overview-Day**

MABPAB - EARL STAMPS (PLNG UNIT CHIEF)

SHEET METAL C-135

R. BOLANOS / T. HALL

| | 4/7 | 4/14 | 4/21 | 4/28 | 5/19 | 6/2 | 6/15 |
|---|---|---|---|---|---|---|---|
| KICK-OFF St.L | | | | | | | |
| ALC | | | | | | | |
| DATA COLLECTION ALC | | | | | | | |
| PROFILE: OPERATION | 80% | 95% | 100% | 100% | 100% | 100% | 100% |
| MANPOWER | 50% | 100% | 100% | 100% | 100% | 100% | 100% |
| WORKLOAD | 30% | 100% | 100% | 100% | 100% | 100% | 100% |
| EQUIPMENT | 15% | 90% | 100% | 100% | 100% | 100% | 100% |
| DISASSY/ASSY | 50% | 100% | 100% | 100% | 100% | 100% | 100% |
| PARALLEL | 50% | 100% | 100% | 100% | N/A | N/A | N/A |
| IN/OUT DATES | 10% | 16% | 30% | 40% | 70% | 90% | 100% |
| CONTROL DOCUMENTS | | | | | | | |
| ENVELOP | 100% | 100% | 100% | 100% | N/A | N/A | N/A |
| ITEM CHECK LIST | 10% | 80% | 100% | 100% | 100% | 100% | 100% |
| ITEM SUMMARY | 10% | 80% | 100% | 100% | 100% | 100% | 100% |
| RCC CHECK LIST | 10% | 80% | 100% | 100% | 100% | 100% | 100% |
| WCD HISTORY DATA | | 20% | 75% | 100% | N/A | 100% | 100% |
| DATA PROCESSING | | | | | | | |
| PROFILES ALC | | | 50% | 100% | 100% | 100% | 100% |
| FLAT FILES St.L | | | 50% | 100% | 100% | 100% | 100% |
| DATA VALIDATION St.L | | | 50% | 80% | 100% | 100% | 100% |
| SIMULATION RUN St.L | | | | | 100% | 100% | 100% |
| MODEL VALIDATION St.L/ALC | | | | | | 100% | 100% |
| BRAINSTORMING ALC | | | | | | 100% | 100% |
| EXPERIMENTATION St.L | | | | | | 50% | 100% |
| DEVELOP PRESENTATION | | | | | | 100% | 100% |

April — May — June

Week 13 | Week 14 | Week 15 | Week 16 | Week 17 | Week 18 | Week 19 | Week 20 | Week 21 | Week 22 | Week 23 | Week 24 | Week

COMPLETED ON SCHEDULE

TB-form 11442 / © Copyright 1987 by Time/system® International A/S Denmark All rights reserved.

Flag Day
Father's Day

July

| Week | M | T | W | T | F | S | S |
|---|---|---|---|---|---|---|---|
| 26 | | | | | | 1 | 2 |
| 27 | 3 | 4 | 5 | 6 | 7 | 8 | 9 |
| 28 | 10 | 11 | 12 | 13 | 14 | 15 | 16 |
| 29 | 17 | 18 | 19 | 20 | 21 | 22 | 23 |
| 30 | 24 | 25 | 26 | 27 | 28 | 29 | 30 |
| 31 | 31 | | | | | | |

7 4 Independence Day

August

| Week | M | T | W | T | F | S | S |
|---|---|---|---|---|---|---|---|
| 31 | | 1 | 2 | 3 | 4 | 5 | 6 |
| 32 | 7 | 8 | 9 | 10 | 11 | 12 | 13 |
| 33 | 14 | 15 | 16 | 17 | 18 | 19 | 20 |
| 34 | 21 | 22 | 23 | 24 | 25 | 26 | 27 |
| 35 | 28 | 29 | 30 | 31 | | | |

September

| Week | M | T | W | T | F | S | S |
|---|---|---|---|---|---|---|---|
| 35 | | | | | 1 | 2 | 3 |
| 36 | 4 | 5 | 6 | 7 | 8 | 9 | 10 |
| 37 | 11 | 12 | 13 | 14 | 15 | 16 | 17 |
| 38 | 18 | 19 | 20 | 21 | 22 | 23 | 24 |
| 39 | 25 | 26 | 27 | 28 | 29 | 30 | |

9 4 Labor Day
9 30 Rosh Hashanah

October

| Week | M | T | W | T | F | S | S |
|---|---|---|---|---|---|---|---|
| 39 | | | | | | | 1 |
| 40 | 2 | 3 | 4 | 5 | 6 | 7 | 8 |
| 41 | 9 | 10 | 11 | 12 | 13 | 14 | 15 |
| 42 | 16 | 17 | 18 | 19 | 20 | 21 | 22 |
| 43 | 23 | 24 | 25 | 26 | 27 | 28 | 29 |
| 44 | 30 | 31 | | | | | |

10 9 Columbus Day / Yom Kippur
10 24 United Nations Day
10 31 Halloween

July | August | September | October

eek 24 | Week 25 | Week 26 | Week 27 | Week 28 | Week 29 | Week 30 | Week 31 | Week 32 | Week 33 | Week 34 | Week 35 | Week 36 | Week 37 | Week 38 | Week 39 | Week 40 | Week 41 | Week 42 | Week 43

COMPLETED ON SCHEDULE

October

| Week | M | T | W | T | F | S | S |
|---|---|---|---|---|---|---|---|
| 39 | | | | | | | 1 |
| 40 | | 2 | 3 | 4 | 5 | 6 | 7 | 8 |
| 41 | | 9 | 10 | 11 | 12 | 13 | 14 | 15 |
| 42 | | 16 | 17 | 18 | 19 | 20 | 21 | 22 |
| 43 | | 23 | 24 | 25 | 26 | 27 | 28 | 29 |
| 44 | | 30 | 31 | | | | | |

10 9 Columbus Day / Yom Kippur
10 24 United Nations Day
10 31 Halloween

November

| Week | M | T | W | T | F | S | S |
|---|---|---|---|---|---|---|---|
| 44 | | | | 1 | 2 | 3 | 4 | 5 |
| 45 | | 6 | 7 | 8 | 9 | 10 | 11 | 12 |
| 46 | | 13 | 14 | 15 | 16 | 17 | 18 | 19 |
| 47 | | 20 | 21 | 22 | 23 | 24 | 25 | 26 |
| 48 | | 27 | 28 | 29 | 30 | | | |

11 7 Election Day
11 11 Veterans Day
11 23 Thanksgiving Day

December

| Week | M | T | W | T | F | S | S |
|---|---|---|---|---|---|---|---|
| 48 | | | | | 1 | 2 | 3 |
| 49 | | 4 | 5 | 6 | 7 | 8 | 9 | 10 |
| 50 | | 11 | 12 | 13 | 14 | 15 | 16 | 17 |
| 51 | | 18 | 19 | 20 | 21 | 22 | 23 | 24 |
| 52 | | 25 | 26 | 27 | 28 | 29 | 30 | 31 |

12 23 Hanukkah
12 25 Christmas

October | November | December

Week 38 | Week 39 | Week 40 | Week 41 | Week 42 | Week 43 | Week 44 | Week 45 | Week 46 | Week 47 | Week 48 | Week 49 | Week 50 | Week 51 | Week 52

OC M.. PAB

**Activit**
**Checklis**

D = Delegated for Action

| FOLDER # | Date % Comp | Priority A | B | C | OK | Activity | Delegated to | D | Start Date | Due Date |
|---|---|---|---|---|---|---|---|---|---|---|
| 1 | 100% | | | ✓ | ✓ | ENVELOP SIZE/VOL CU.FT. | R.B | ✓ | 4/7 | 4/7 |
| 2 | | | | ✓ | | ITEM CHECK LIST | R.B. | ✓ | 4/7 | 4/14 |
| 3 | | | | ✓ | | ITEM SUMMARY | R.B. | ✓ | 4/7 | 4/14 |
| 4 | | | | ✓ | | RCC. CHECK LIST | R.B | ✓ | 4/7 | 4/14 |
| 5 | 80% | ✓ | | | | OPERATION - MATCH W/FLOW PROCESS<br>- EQUIPMENT<br>- TSP TIMES<br>- MAND. FLOW TIME (HRS)<br>- SKILL LEVEL (MIN. REQ.) | T.H | ✓ | 4/3 | 4/12 |
| 6 | 50% | ✓ | | | | MANPOWER - QTY<br>- HRS<br>- ALT. SKILL CODE | E.S/J.D. | ✓ | 4/7 | 4/12 |
| 7 | 30% | ✓ | | | | WORKLOAD - FLOATING STOCK<br>- ACT PROD by QTR<br>- MAX W.I.P<br>- STD. HRS | L.M | ✓ | 4/7 | 4/12 |
| 8 | 15% | ✓ | | | | EQUIPMENT - PREV. MAINT<br>- BREAKDOWN<br>- % USED by OTHER<br>- ALTERNATIVE | L.M | ✓ | 4/6 | 4/13 |
| 9 | 50% | ✓ | | | | DISASSEMBLE/ASSEMBLE | R.B. | ✓ | 4/7 | 4/10 |
| 10 | 50% | ✓ | | | | PARALLEL | R.B. | ✓ | 4/7 | 4/10 |
| 11 | | | ✓ | | | IN DATES | E.S | ✓ | 4/7 | 6/7 |
| 12 | | | ✓ | | | OUT DATES | E.S. | ✓ | 4/7 | 6/7 |
| 13 | | | | | | IE ASSESSMENT | RB/T.H | | 4/3 | ON GOING |

TS form 1106/ © Copyright 1981 86 by ☐ Time/system International Denmark Time/Design™ U S and Canada All rights reserved

EARL'S WISH LIST.

DECREASE - FLOW TIME
- SPACE REQ.
- LABOR HR.

IMPROVE CTRL/ORG. STRUC.

INCREASE OUTPUT (EFF)

**Daily Plan**

**Thursday**
**13**
**April 1989**

**Week 15 103/262**

| | Schedule | OK |
|---|---|---|
| 8: | MODEL PRESENTATION TO AB WORK CENTER TEAM | |
| 9. | TOUR MABPAB Bldg 95 | |
| 10: | TOUR MABPFF Bldg 2121 | |
| 11: | TOUR NEW Bldg FOR MABPAB | |
| 12: | | |
| 1: | | |
| 2: | DIVISION MAB TOM JONES<br>BRANCH MABE CHARLIE SANDINE | |
| 3 | | |
| 4: | | |
| 5: | | |

| | Contact | OK |
|---|---|---|
| | | |

| # | Activity |
|---|---|
| | |

# OC MABPAB

**Activities Checklist**

D = Delegated for Action

| FOLDER # | Date % Comp | Priority A | B | C | OK | Activity | Delegated to | D | Start Date | Due Date |
|---|---|---|---|---|---|---|---|---|---|---|
| 1 | 100% | | | ✓ | ✓ | ENVELOP SIZE/VOL CU. FT. | R.B | ✓ | 4/7 | 4/7 |
| 2 | | | | ✓ | | ITEM CHECK LIST | R.B. | ✓ | 4/7 | 4/14 |
| 3 | | | | ✓ | | ITEM SUMMARY | R.B. | ✓ | 4/7 | 4/14 |
| 4 | | | | ✓ | | RCC CHECK LIST | R.B | ✓ | 4/7 | 4/14 |
| 5 | 80% | ✓ | | | | OPERATION - MATCH W/ FLOW PROCESS<br>- EQUIPMENT<br>- TSP TIMES<br>- MANO. FLOW TIME (Hrs)<br>- SKILL LEVEL (Min. Req.) | T.H | ✓ | 4/3 | 4/12 |
| 6 | 50% | ✓ | | | | MANPOWER - QTY<br>- Hrs<br>- Alt. SKILL CODE | E.S/T.D. | ✓ | 4/7 | 4/12 |
| 7 | 30% | ✓ | | | | WORKLOAD - FLOATING STOCK<br>- ACT PROD by QTR<br>- MAX W.I.P<br>- STD HRS. | L.M | ✓ | 4/7 | 4/12 |
| 8 | 15% | ✓ | | | | EQUIPMENT - PREV. MAINT<br>- BREAKDOWN<br>- %USED by OTHER<br>- ALTERNATIVE | L.M | ✓ | 4/6 | 4/13 |
| 9 | 50% | ✓ | | | | DISASSEMBLE/ASSEMBLE | R.B. | ✓ | 4/7 | 4/10 |
| 10 | 50% | ✓ | | | | PARALLEL | R.B | ✓ | 4/7 | 4/10 |
| 11 | | | ✓ | | | IN DATES | E.S | ✓ | 4/7 | 6/7 |
| 12 | | | ✓ | | | OUT DATES | E.S. | ✓ | 4/7 | 6/7 |
| 13 | | | | | | IE ASSESSMENT | RB/T.H. | | 4/3 | ON GOING |

TS form 1106/ © Copyright 1986 by Time/system International Denmark Time/Design™ U.S and Canada All rights reserved

## EARL'S WISH LIST.

DECREASE - FLOW TIME
- SPACE REQ.
- LABOR HR.

IMPROVE CTRL/ORG. STRUC.

INCREASE OUTPUT (EFF)

**Daily Plan**

**Thursday 13 April 1989**

**Week 15 103/262**

| | Schedule | OK |
|---|---|---|
| 8: | MODEL PRESENTATION TO AB WORK CENTER TEAM | |
| 9: | TOUR MABPAB Bldg 95 | |
| 10: | TOUR MABPFF Bldg 2121 | |
| 11: | TOUR NEW Bldg FOR MABPAB | |
| 12: | | |
| 1: | | |
| 2: | DIVISION MAB Tom Jones<br>BRANCH MABE Charlie Sandine | |
| 3 | | |
| 4: | | |
| 5: | | |

| | Contact | OK |
|---|---|---|
| | | |

| # | Activity |
|---|---|
| | |

# DIRECTORATE OF MAINTENANCE

# RELOCATION OF

# BUILDING 95 SHEET METAL

# RELOCATION OF B95 SHEET METAL

## BACKGROUND

- SHEET METAL RELOCATED AFTER NOV 84 FIRE
- DS WAREHOUSES AT 98% SATURATION
- CC INSTRUCTED MA TO VACATE B95 BY SEPT 89
- MA DIRECTED ESTABLISHMENT OF FACILITY PLANNING GROUP

FACILITY PLANNING GROUP

OKLAHOMA CITY ALC

DIRECTORATE MAINTENANCE

**PLAN B** - RELOCATION OF B95 SHEET METAL

0 B3001 HIGHBAY, POST 52 THRU 74

- BLADE AREA MUST VACATE BY JUN 89
- ENGINE LINE MOVE BACK NORTH OF COL 74

MA THREW THIS PLAN OUT.

# MA RELOCATION OF BLDG 95 SHEET METAL

PROPOSAL: A

- LOCATION
  - BLDG 2101
- PLAN
  - RELOCATE MA ORGANIZATIONS FROM B2101 (MAD, MAE, MAT) TO SEPARATE SMALLER LOCATIONS
  - RELOCATE (MA) GROUND SPACE EQUIPMENT CONTRACTOR
  - RELOCATE BLDG 95 SHEET METAL INTO [redacted] SF OF BLDG [redacted]

# MA RELOCATION OF BLDG 95 SHEET METAL

PLAN:

0 RELOCATE MA ORGANIZATIONS FROM B2101

- MA GAINS ASSIGNMENT OF BLDG 3771 - 15,000 SF
- MA RELOCATES MAE TO BLDG 3771 - 15,000 SF
- MAD PLANT MANAGEMENT RELOCATES FABRICATION/WELDING SHOP TO BLDG 3773 - 18,000 SF
- MAE PROPULSION DIVISION RELOCATES ENG. RECLAMATION TO BLDG 3703 & 3001 - 21,000 SF TOTAL
- MAT ACCESSORIES DIVISION RELOCATES FOUNDRY TO BLDG 2129 - 2,700 SF OR 3001

# MA RELOCATION OF BLDG 95 SHEET METAL CONTINUED

PLAN:

0 [redacted] INTO VACATED SPACE [redacted] SEP 89 EST. COMPLETION DATE

- SELF-HELP AND CONTRACT RELOCATION FROM BLDG 95

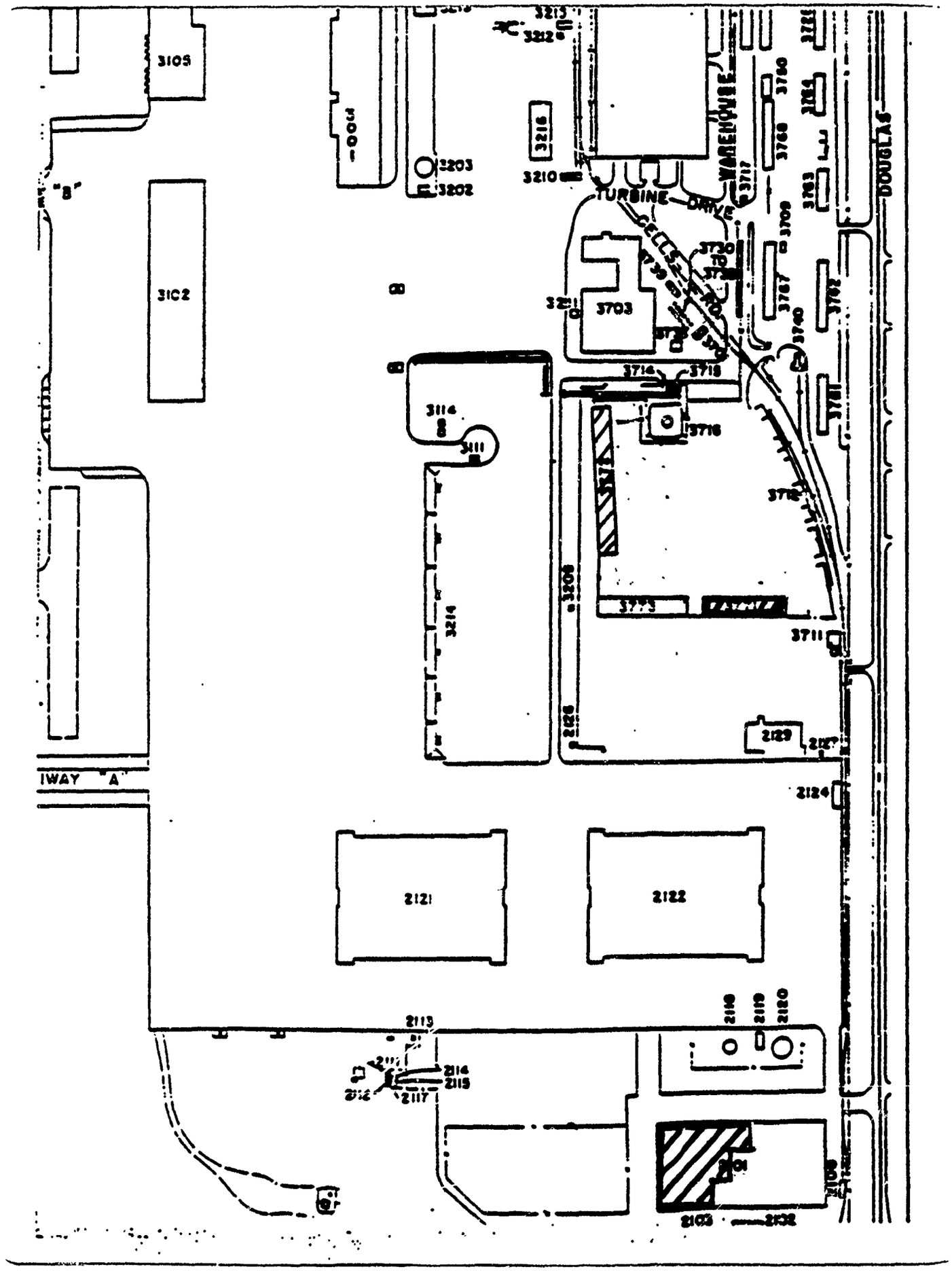

3105
3102
"B"
3203
3202
3216
3210
3213
3212
TURBINE DRIVE
CELLS RD
WAREHOUSE
DOUGLAS
3703
3730
3714
3715
3716
3114
3111
3214
3208
3773
3711
2129
2124
IWAY "A"
2121
2122
2113
2114
2115
2117
2118
2119
2120
2103
2102

# PROPOSED AIRCRAFT SHEETMETAL

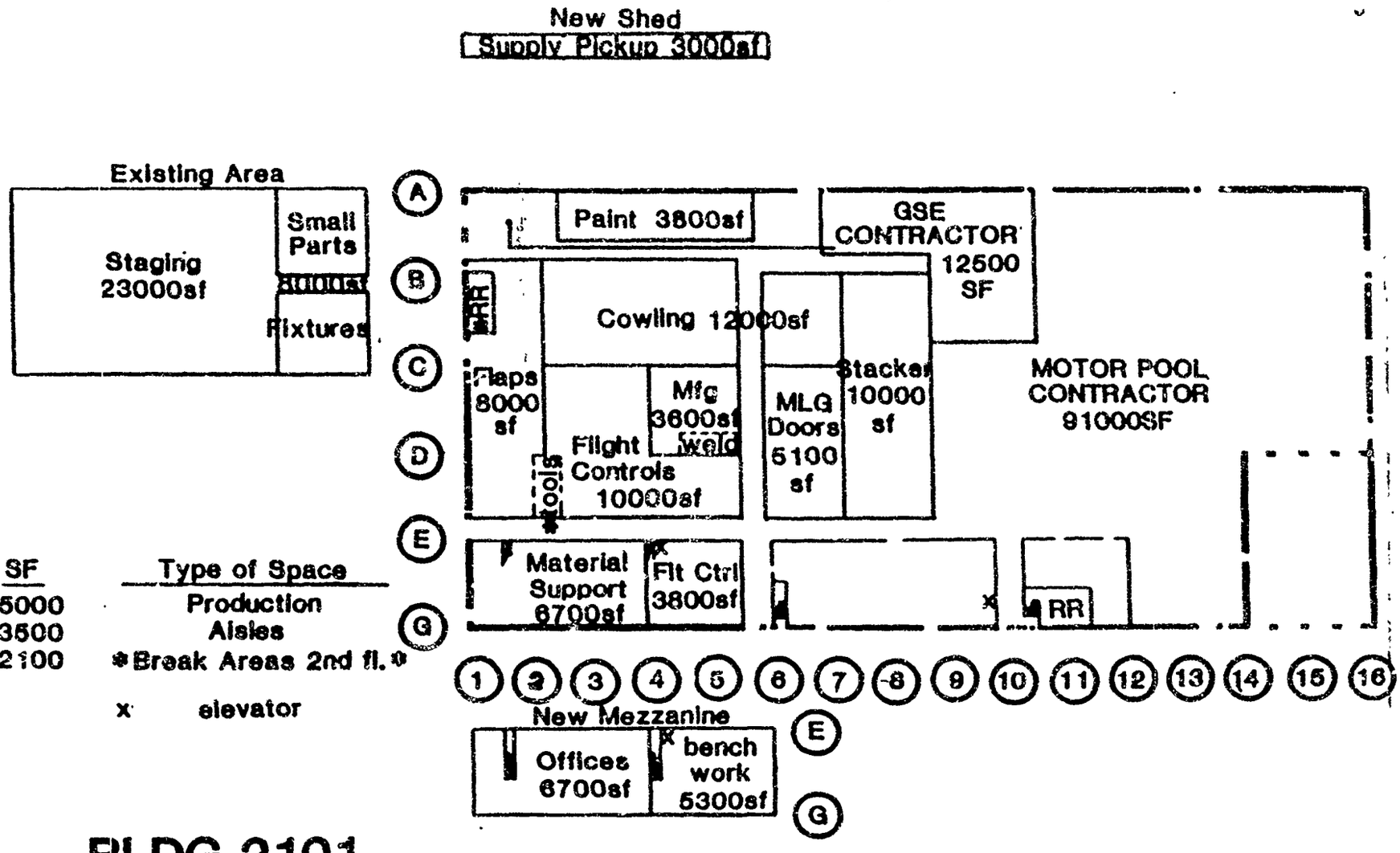


BLDG 2101

SUBJECT UNDER REVIEW

SHEET METAL RELOCATION

DATE REVIEWED

REPORTING AGENCY & PROJECT MONITOR

FY89

| NO | MILESTONE ACTIVITIES AND EVENTS | PCT PROGRAM ACCOMPLISHED FCST | PCT PROGRAM ACCOMPLISHED ACT |
|---|---|---|---|
| 1 | MA APPROVAL OF B2101 PLAN AND IMPLEMENTATION (OPR: MA) | | |
| 2 | SUBMIT 600P MAT (OPR: MAT) | | |
| 3 | SUBMIT 600P MAE (OPR: MAE) | | |
| 4 | SUBMIT 600P MAD (OPR: MAD) | | |
| 5 | REVIEW DRAWINGS FROM DIVISION(S), ORDER MATERIALS (OPR: MAD) | | |
| 6 | MAT SITE PREP OF B3001 (OPR: MAT) | | |
| 7 | MAE SITE PREP OF B3767 (OPR: MAE) | | |
| 8 | MAD SITE PREP OF B3771/B3773 (OPR: MAD) | | |
| 9 | MAT VACATE B2101 TO B2129 (OPR: MAT) | | |
| 10 | MAE VACATE B2101 TO B3767 (OPR: MAE) | | |
| 11 | MAD VACATE B2101 TO B3771/B3773 | | |
| 12 | SUBMIT B2101 DESIGN & 600P SERVICE ORDER (OPR: MAB) | | |

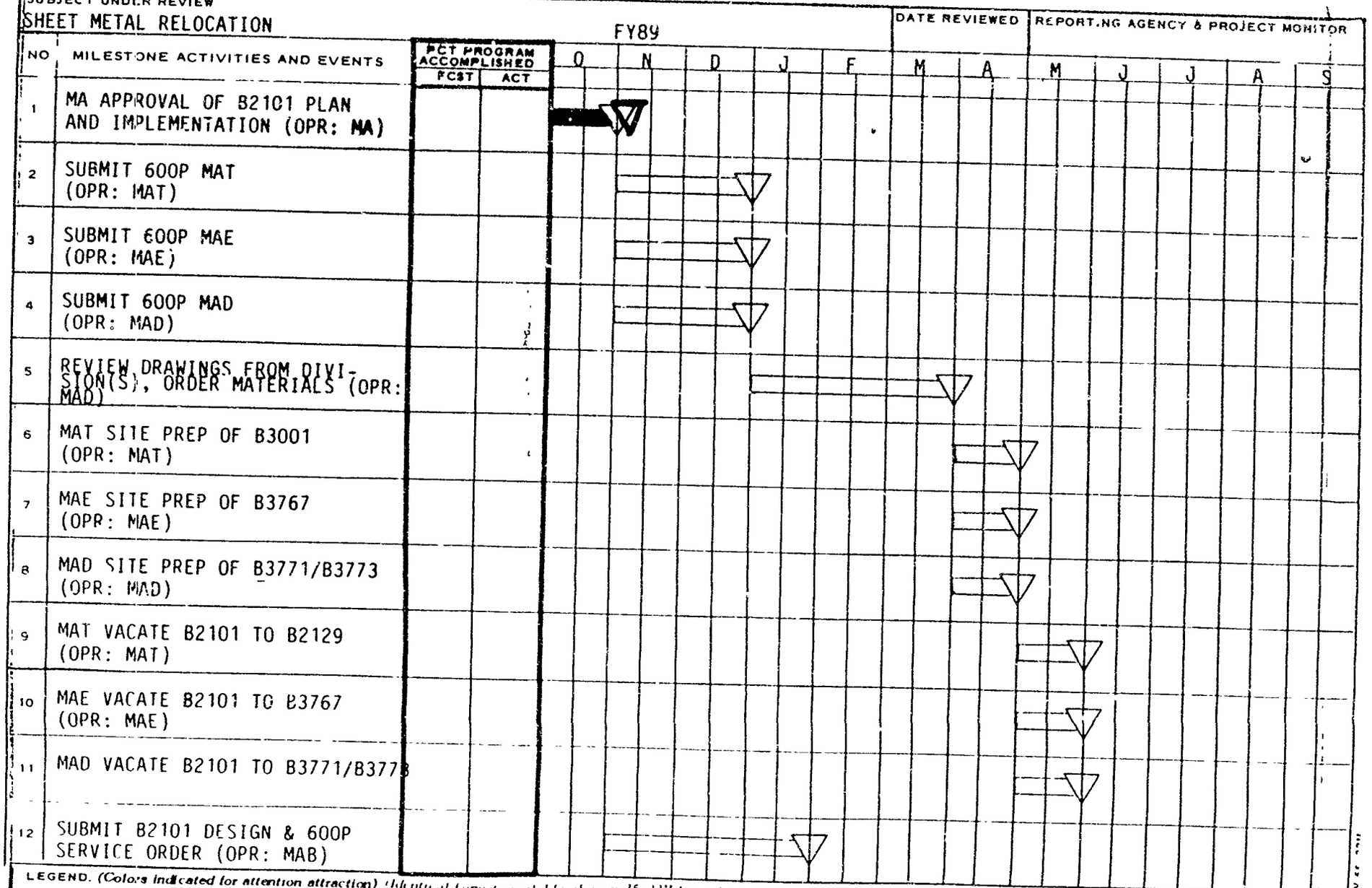


LEGEND. *(Colors indicated for attention attraction) (Identical format available also on 35x22" bristol for wall chart or presentation (AFLC Form 290A).)*

ACTIVITY PLAN — EVENT TARGET

1 (Red outline) 2 TARGET SLIPPAGES

(Black fill-in of) PERCENTAGE OF ACTIVITY PLAN COMPLETED AS OF DATE OF REVIEW

DATE COMPLETED

SUBJECT UNDER REVIEW

SHEET METAL RELOCATION CONTINUED FY89

DATE REVIEWED

REPORTING AGENCY & PROJECT MONIT

| NO | MILESTONE ACTIVITIES AND EVENTS | PCT PROGRAM ACCOMPLISHED FCST | PCT PROGRAM ACCOMPLISHED ACT | O | N | D | J | F | M | A | M | J | J | A | S |
|---|---|---|---|---|---|---|---|---|---|---|---|---|---|---|---|
| 13 | REVIEW DRAWINGS FROM DIVISION FOR B2101 (OPR: MAD) | | | | | | | | | | | | | | |
| 14 | WRITE SPECIFICATIONS & STATEMENT OF WORK (OPR: MAD) | | | | | | | | | | | | | | |
| 15 | CONTRACT SOLICITATION & AWARD (OPR: MAD) | | | | | | | | | | | | | | |
| 16 | PREP SITE AT B2101 (OPR: MAD/CONTRACTOR) | | | | | | | | | | | | | | |
| 17 | RELOCATE FROM B95 TO B2101 (OPR: MAD) | | | | | | | | | | | | | | |

29 SEPT

LEGEND: (Colors indicated for attention attraction) (Identical format available also on 35x22" bristol for wall chart or presentation (AFLC Form 280A))

EVENT 1 2 TARGET PERCENTAGE OF ACTIVITY DATE COMPLETED

Doug [illegible]
67978

1

# MA RELOCATION OF BLDG 95 SHEET METAL

## LOCATION: B2101 VRS B95 TRAVEL DISTANCES

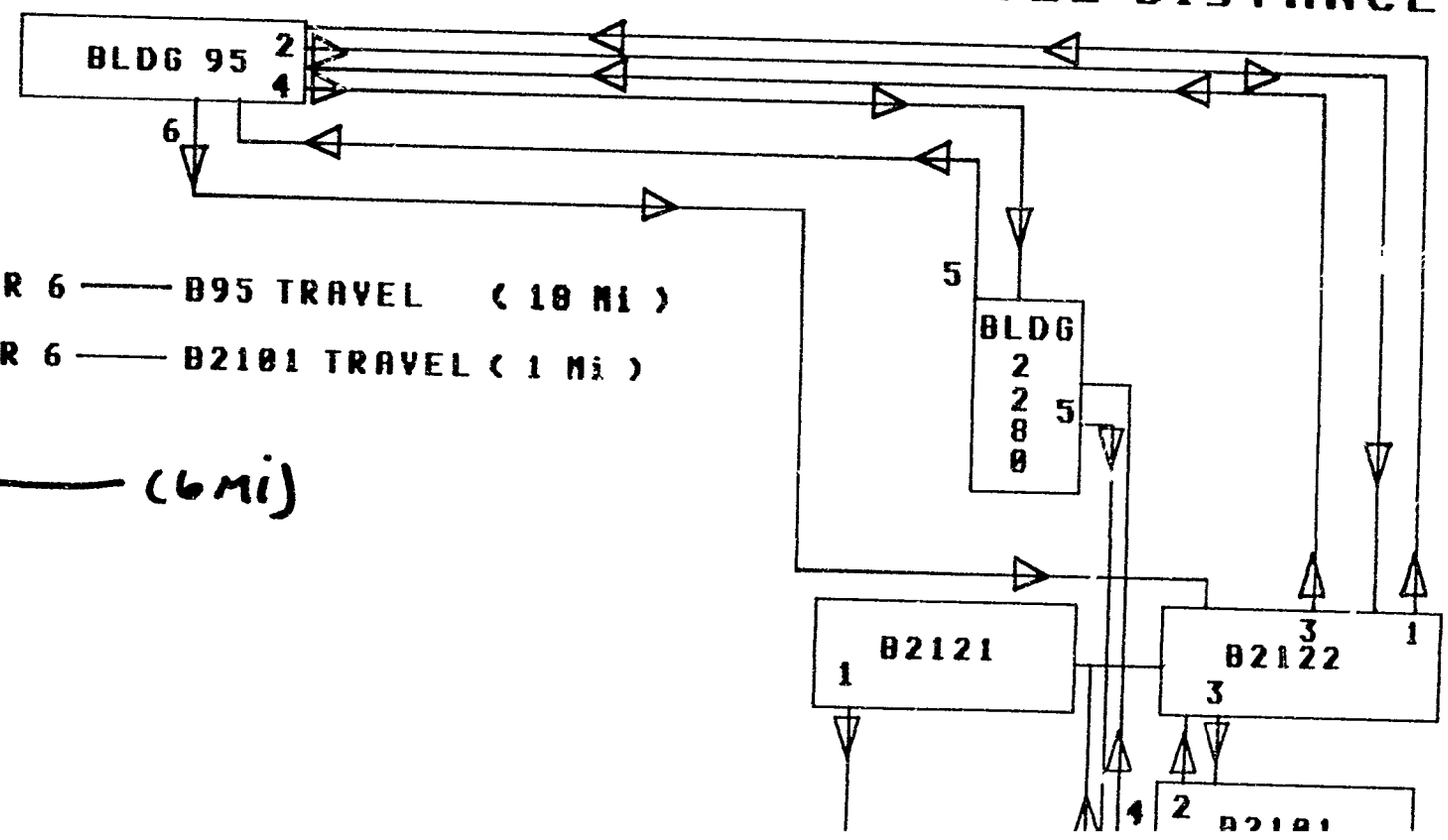


1 THUR 6 —— B95 TRAVEL ( 18 Mi )

1 THUR 6 —— B2101 TRAVEL ( 1 Mi )

B3001 —— (6 Mi)

3-31-89 - Engineering Notes - Tim Hall - Industrial Eng

Started on site at OC-ALC. Engineers on site today were: Blake Hiscox, Henry Johnson, Ricardo Bolanos, Sadie MacFarland and myself. We met with Bob Conover, planning chief at MAT, ~~and~~ Earl Stamps, planning chief at MAB, and Gene Leiterman, our AF contacts. A meeting was set up for 2 o'clock Monday afternoon with the same attendees plus some people from scheduling and planning.

We were assigned an office conference room ('The War Room') adjacent to Bob Conover's office. Since the rest of the team had spent 4 weeks in St. Louis training [illegible] the process charter [illegible] another way and [illegible] first day back since December for [illegible] some reading material to review for the rest of the day. Namely, the 'Cure Notice' and the 'Cure Notice Response' letters were reviewed by myself.

4-3-89 Monday

Chuck Gonzales ~~was~~ started a two week assignment here today. Ricardo Bolanos, Chuck Gonzales and myself spent most of the morning meeting with Earl Stamps, Planning Chief for MABIAB and Larry Hallmark, MABIAB planner. We discussed how we were planning to approach the MABIAB charter [illegible]. [illegible] them [illegible] full [illegible] working [illegible] chiefly [illegible] the [illegible] list was agreed to [illegible] [illegible] [illegible] [illegible] [illegible] [illegible].

We toured Building 75; Sheetmetal Shop [illegible] Mullinax led us through the shop.

At 2PM we had a kickoff meeting of sorts with the people mentioned in 3-31-59 notes in attendance. Our people included Chuck [illegible], Blake Hiscox, Henry Johnson, Sadie Macfarland, Ricardo Solanes and myself. Blake & Henry sort of co-led the meeting by expounding upon why we are here again. The cooperation level and interest seem to be good. The main problem seemed to be finding enough room for us to work in. We will be able to use the 'War Room' for 12 weeks. Earl Stamps furnished us one black WCBs.

Tuesday 4-4-59

Ricardo & [illegible] doing MABPAB. Today we got started on the paperwork. Ricardo wanted a flow process chart on every PCN, so we sat down in the War Room and started on a flow process chart for a PCN. Then we decided to enlist the help of MABPAB personnel to help us do the charts and to indicate when the WCB is out of sequence.

Most of the afternoon was spent with Lonny Mullinax and Michael Tytonic, MABPAB planners, working up flow process charts. Earl Stamps reviewed his proposed layout for an hour or two. MABPAB is scheduled to move to bldg 2401 on 1 Oct 59.

Wed - 4/5/89

I spent the day Filling out flow process charts. Ricardo and the planners started on other forms

Thur - 4/6/89

Started ~~Edit~~ putting together a package for one PCN no. 151266. Interviewed mechanic for operation times and equipment involved with each operation. His name was Levi Brown.

Fri - 4/7/89

Started putting profiles in folders and getting things arranged to meet with all machines.

Chuck Gonzales, Ricardo Flores, Tony Mullinex, and ~~myself~~ I met with Earl Stamps at 2 for a status of project report. Ricardo presented a list of things to be completed with the target completion date and the assigned responsible person. Earl reacted favorably to our approach and progress.

Sat - 4/8/89

Completed preparations for mechanics interviews. Made folders and completed blank operation profiles where the computer printouts had gaps.

Monday, April 10, 1989 and Tuesday, April 11, 1989

Larry Mullinax and I walked through the shop in Bldg 95 and talked to all of the floor supervisors who identified their better mechanics for me to interview. I then interviewed the following mechanics associated with each PCN:

| Mechanic | Supervisor | PCN |
|---|---|---|
| Billy Thompson | Steward | 15113A |
| Ina Mundy | Steward | 15025A |
| John Tatum | Jacobs | 15119A |
| Reford Ivie | " | 15321A |
| Peter Daniels | Brewer | 15136A<br>15137A |
| Vernon Taylor | Jacobs | 15140A |
| Manual Florez | Lenox | 15150A |
| Steve Farley | Jacobs | 15175A |
| Jesse Spencer | Jacobs | 15175A |
| Ralph Barrier | Jack Wimberly | 15188A |
| ↓ | ↓ | 15189A |
| | | 15191A |
| | | 15192A |
| Lydia Fletcher | Jack Wimberly | 15188A (Foreflap) |
| ↓ | ↓ | 15189A |
| | | 15191A |
| | | 15192A ↓ |
| David King | Lenox | 15236A |
| Vicki Fry | " | 15237A |
| Calvin Hackler | Brewer | 15249A |
| ↓ | " | 15250A |

During the interviews I obtained the following information: (1) occurrence factor for each operation in [illegible]; (2) skill level required for each operation,

(3) number of people needed to perform each operation, (4) amount of time required for each operation ~~required~~ to be performed, (5) percentages of when an operation is difficult or easy, with corresponding times, (6) equipment required during each operation, and (7) the amount of time the equipment is utilized during each operation.

Wed, 4/12/89

Lou Mavros (T.O. I manager) and Mike McCoy (simulation manager), and Henry Stiele (marketing mgr) are here for two days. They spent this morning with Henry Johnsen touring his BCCs and this afternoon touring Blake Hiscocks BCCs. Guy Fille returned today. Guy will take over Blake's position as site manager.

I started the process of getting transit times. It took longer than expected because there was clarification needed on just what time to use for transit time and because of the extra time required for the VIPs. Mike McCoy & Chuck Gonzales had a discussion on transit times and time backshops and after that things were set. I interviewed Harry Mullinax this afternoon and got all transit times (travel times between backshops) and operation times for operations in backshops.

Thursday 4/13/89

Today was spent in meetings and tours with Lou Mavros, and Mike McCoy, and Harry Steele. At 8 O'clock there was a meeting at Bldg 95 with MABPAB key personnel; Earl Stamps, (MABPAB planning unit chief) Janis Wood, (MABPAB unit chief), several MABPAB floor supervisors, Larry Mullinax, MABPAB planner, a PAB scheduler, a PAB engineer, Lou Mavros, Harry Steele, Mike McCoy, Chuck Gonzales, Ricardo Bolanos, and myself. At this meeting, Earl Stamps gave a pitch on his organization and who we were and what we were doing. Ricardo gave a status of the project report and Mike McCoy gave a simulation pitch.

After this meeting Lou Mavros, Harry Steele, Mike McCoy, Chuck Gonzales, Ricardo Bolanos, Earl Stamps and myself were given a tour of Bldg 95 by Janis Wood. After this tour, Earl Stamps reviewed the proposed layout for his facility at Bldg 2101 with Lou Mavros and the rest of us, mainly Mike McCoy, answered questions that Janis Wood had on what the model ~~could~~ can and cannot do.

At about 11:30-11:45 AM we (the same group that toured Bldg 95) rode over to the other end of the base and toured Bldg 2101, where PAB is scheduled to move in Oct.

Between 1 and 3 I tried to work on cleaning up the operation profile. At 3 PM we had a meeting with Col. Souder, PAB chief. Our people included Lou Mavros, Mike McCoy, Harry Steele, Chuck Gonzales, Ricardo Bolanos, Guy [illegible], and myself. The same presentation given at 8 AM was presented.

at this time. The main benefit of this meeting seemed to be the clarification of what the model cannot do.

Friday 4/14/89

I cleaned up the computer printouts and operation profiles. They are ready for input but Richard wants to hold them for our T.E. Assessment next week.

Monday, 4/17/89

Interviewed Mr. Steward, supervisor of MRBPB side cowl shop. He indicated that their main problem was availability of parts. The unavailability of new parts hampers the flow process tremendously, according to him. Key points are as follows:

- ✓ MEC is required to keep a 15 day supply of parts on hand in the Bldg 25 area, but are often out of critical parts.
- ✓ If MEC is out, and the part is somewhere else in the base, it takes 3-4 hrs to get the part.
- ✓ If a part has to be ordered it takes months for it to come in.
- ✓ Most of the time parts are 'robbed' from other cowlings.

A focus study is recommended to develop an inventory system that will consistently keep a 15 day supply on hand. One suggestion was to have the parts in a 'kit' for each cowling, with the unused portion returned to MEC for incorporation into other kits.

Interviewed Ino Mundy, mechanic on LH side cowl. The side cowl comes in to storage, goes through teardown, then goes into the fixture for skin repair/replacement, then goes into final for completion. In final excess skin is trimmed, small parts such as clips are installed, and all cowling is completed. After final the cowling goes into the fixture for a final alignment check.

A block diagram of this process is as follows:

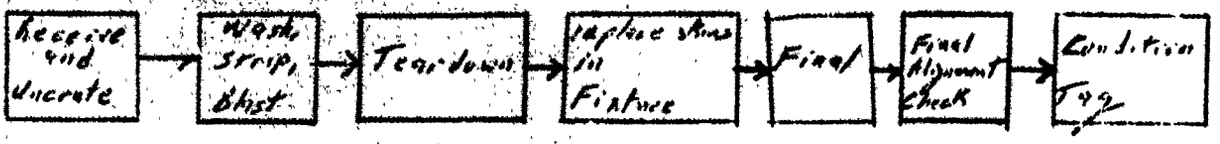


Some areas of concern and potential quick fixes are discussed below:

- The Teardown phase cannot be worked in sequence by the WCD

QF - More light is needed on the Fixture while working up under the port.

- Rivets - the rivets ~~need~~ have to be kept frozen in order to keep soft. After they thaw, they harden & cannot be backed. Presently Ina Mundy keeps dry ice on a tray of all rivets she needs. So the rivets stay cold until installed. ~~A method~~ A standardized method of doing this should be established. The freezer is too far from the work area @ the present time to run and get whatever rivets are needed.

QF Ideas - small freezers in work area
- stdized trays & block of dry ice issued to each mechanic

- The inspection technique is visual inspection. Are there other more comprehensive, objective techniq
- Air pressure is a problem - water and oil get in the lines and it often operates at about 60% pressure. Rivets cannot be backed with partial pressure.
- Human Factors - It gets very hot in the ship in the summer and very cold in the winter. Lenti[illegible] fans should be installed in the walls during this summer before the move in October. [illegible]

should be installed in the new location, if it is not already planned.

- Process delays - air pressure, parts shortage, heat in summer (very frequent breaks are necessitated) cold in winter.
- Environmental Assessments/Impacts - There is inadequate ventilation in the shop. During the summer a blue cloud of jet exhaust fumes builds up in the area. (They are located close to the end of the runway.) Dust clouds build up also. Again, a ventilation fan is needed to ventilate the area
- Eq/Workplace layout - At the present time, it is often difficult to transport a cowling from the storage area to the work area because of obstructions. The new location should be designed to have a clear path from storage to the work areas.

I interviewed Billy Thompson, mech for RH side cowl and gathered the following additional information:

QF/FS experimentation

- a third fixture is needed. Two fixtures are currently in place and it is the bottleneck in the process. The model should test for an extra fixture and determine the cost savings. An extra fixture is needed for LH side cowl also. If a part is needed while the cowling is in the fixture, then there is really a process delay.
- They have to reability between the parts & the mechanic who worked it. They send [illegible] postcard [illegible] with each part they [illegible]

with the mechanics stamp number on it and a log number of the part itself. They can pinpoint who worked on what part if a part comes back defective. This is very commendable and should be implemented in all of FRA and command wide for that matter.

Going back to my interview with Mr Steward, he gave me a 'MAST critical / Super critical status' report that lists parts that they are waiting for. His group (side cowl) had one item on the super critical list (work stoppage) and 12 items on the critical list. He could finish work because of these items. And it was indicated that this was a typical list.

Summary

- ✓ Focus Study - develop an system that will consistently maintain a 15 day supply
- ✓ QF - more light on fixture, underneath cowl
- ✓ QF - standardize procedure for keeping rivets freeze
- ✓ HF - Human Factors - install ventilating fans to reduce heat and to ventilate jet exhaust fumes and dust out of the ship.
- ✓ QF - add a third fixture to right & LH side cowl to ease bottleneck - use model to experiment

4/18/89 Tuesday

MAT Meeting

Our group had a meeting with MAT area managers. Bob Conover, MAT Planning manager, and Gene Leiterman, AF contract manager, were among the people heading up the AF at the meeting. Our group numbers nine at the present time including Guy Fallo, Henry Johnson, Blake Hiscox, Sadie McFarland, Ricardo Bulanos, myself, and three new people that started yesterday.

Bob Conover started the meeting by summarizing the agenda. Gene Leiterman then presented a brief history of the Technology Insertion program. Guy Fallo then presented the forms that we will be asking the AF personnel to complete and the items on the forms were discussed.

I.E. Assessment

I interviewed Jack Wimberly, supervisor of wing flap shop, and Ralph Barrier, mechanic of the same area. Again, the main problem to surface was the shortage of parts: parts such as screws & skins, parts that are always used on every part often run out. It was expressed to me as a communication problem between scheduling, MIC, planning, production & upper mgmt. Sometimes a contract will expire before another one replaces it.

The inspection techniques is visual. Better lighting is needed for finding the cracks, corrosion, etc.

Dust builds up in the [illegible] which along with excessive heat, decreases productivity.

Another problem area discussed was damage to the part in transit. On the floor at the time of the interview, I saw where the [illegible] edge of a flap [illegible] rapidly. This [illegible] occurred between the time [illegible] part was removed from [illegible] and when it was [illegible]

on the shop floor. A study to determine the frequency and extent of in transit damage is recommended.

Summary:

- ✓ Bottleneck identified as parts shortage - Focus study recommended in 4/17/84 notes.
- ✓ QF - Better lighting is needed for visual inspection.
- ✓ QF - Improve ventilation to reduce heat and to ventilate [illegible] of the area. Several stationary fans are currently used
- ✓ Focus Study - Determine Frequency and extent of in transit damage to parts.

4/19/81 Wednesday 

There was an informal meeting @ 7:15 AM ~~[illegible]~~ with Earl Stamps, Larry Mullinax, Ricardo Bolanos, and myself. Two decisions were made. The equipment in the [illegible] machine shop will be reflected on the operation profile as well as the equipment profile. These equipment are not used as part of the regular repair process but are used often enough, for manufacturing out-of-stock items, to be profiled. These will be profiled by entering a single line on each profile with an average time that the equipment was used for that PCN. Three WO-11's work in the [illegible] shop.

The second decision was to include workstations, or workbenches, on the operation and equipment profile. I made a list of PCN's from the 80/20 list and interviewed each supervisor to obtain the number of workbenches available for each PCN. Then a code no. was assigned for each group of workbenches. On the operation profile the code is entered on each operation in PAB where the part is not in the fixture. The equipment profile will reflect the quantity of workbenches available.

1989 P[illegible]t Overview-Day

MABP[illegible] - EARL STAMPS (PLNG UNIT CHIEF)

SHEET METAL C-135

R. BOLANOS / T. HALL

| | 4/7 | 4/12 | 4/21 | 4/28 |
|---|---|---|---|---|
| KICK-OFF St.L | | | | |
| ALC | | | | |
| DATA COLLECTION ALC | | | | |
| PROFILE: OPERATION | 80% | 95% | [illegible] | 100% |
| MANPOWER | 50% | 100% | 100% | 100% |
| WORKLOAD | 30% | 100% | 100% | 100% |
| EQUIPMENT | 15% | 90% | 100% | 100% |
| DISASSY/ASSY | 50% | 100% | 100% | 100% |
| PARALLEL | 50% | 100% | | |
| IN/OUT DATES | 10% | 16% | 30% | 40% |
| CONTROL DOCUMENTS | | | | |
| ENVELOP | 100% | 100% | 100% | 100% |
| ITEM CHECK LIST | 10% | 80% | 100% | 100% |
| ITEM SUMMARY | 10% | 80% | 100% | 100% |
| RCC CHECK LIST | 10% | 80% | 100% | 100% |
| WCD HISTORY DATA | | 20% | 75% | 100% |
| DATA PROCESSING | | | | |
| PROFILES ALC | | | 50% | 100% |
| FLAT FILES St.L | | | 50% | 100% |
| DATA VALIDATION St.L | | | 50% | 80% |
| SIMULATION RUN St.L | | | | |
| MODEL VALIDATION St.L/ALC | | | | |
| BRAINSTORMING ALC | | | | |
| EXPERIMENTATION St.L | | | | |

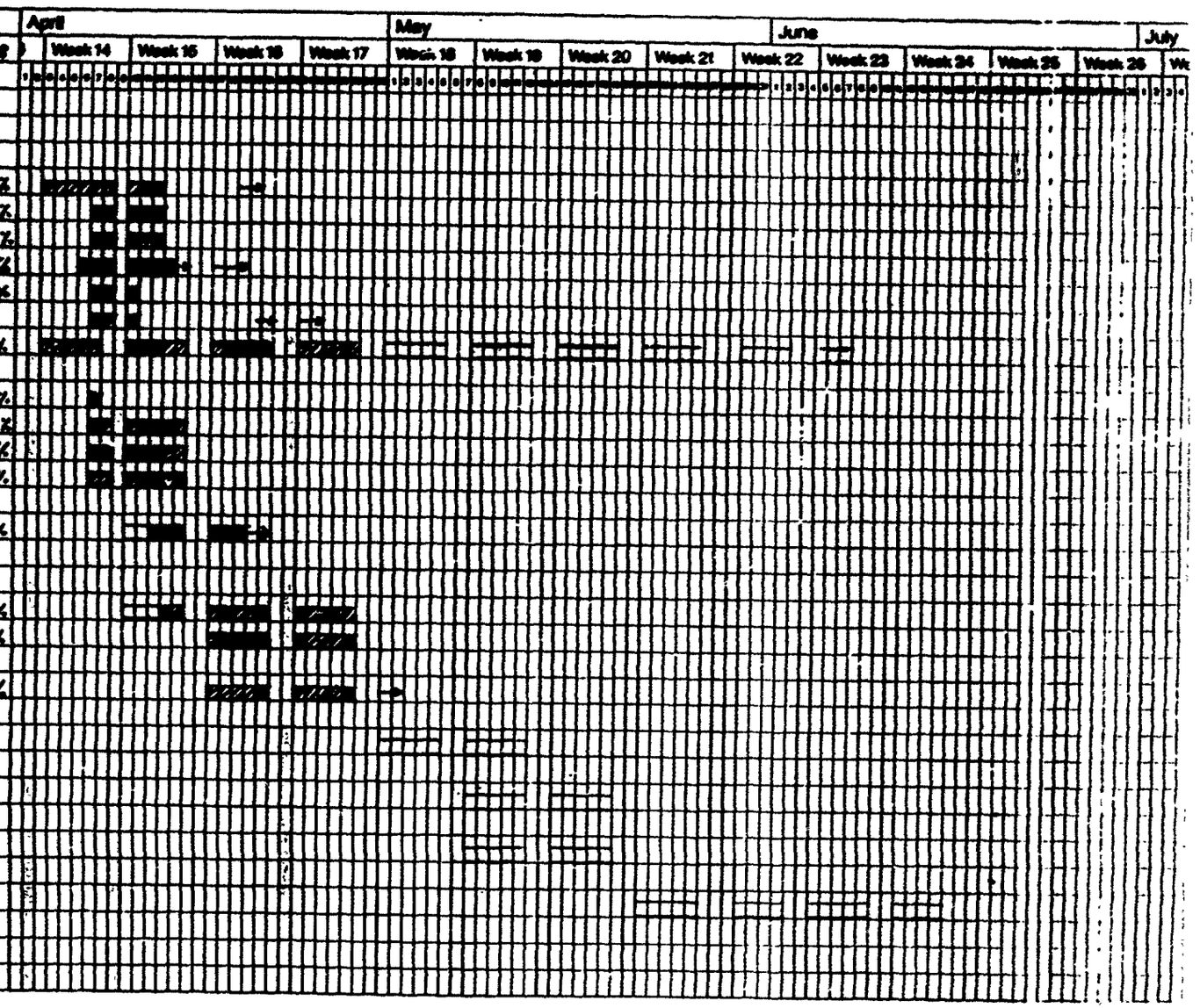


☐ = ☐ =

☐ = ☐ =

TS-form 11442 / © Copyright 1987 by 22 Time/system® International A/S, Denmark. All rights reser

OC MABPAB

**Activities Checklist**

D = Delegated for Action

| Folder # | Date % Comp | Priority A | Priority B | Priority C | OK | Activity | Delegated to | D | Start Date | Due Date |
|---|---|---|---|---|---|---|---|---|---|---|
| 1 | 100% | | | ✓ | ✓ | ENVELOP SIZE/VOL CU.FT. | R.B | ✓ | 4/7 | 4/7 |
| 2 | | | | ✓ | | ITEM CHECK LIST | R.B. | ✓ | 4/7 | 4/14 |
| 3 | | | | ✓ | | ITEM SUMMARY | R.B. | ✓ | 4/7 | 4/14 |
| 4 | | | | ✓ | | RCC CHECK LIST | R.B | ✓ | 4/7 | 4/14 |
| 5 | 80% | ✓ | | | | OPERATION - MATCH W/FLOW PROCESS<br>- EQUIPMENT<br>- TSP TIMES<br>- MAND. FLOW TIME (HRS)<br>- SKILL LEVEL (MIN. REQ.) | T.H | ✓ | 4/3 | 4/12 |
| 6 | 50% | ✓ | | | | MANPOWER - QTY<br>- HRS<br>- ALT. SKILL CODE | E.S/I.D. | ✓ | 4/7 | 4/12 |
| 7 | 30% | ✓ | | | | WORKLOAD - FLOWING STOCK<br>- ACT PROD. by GSR<br>- MAX W.I.P.<br>- STD. HRS | L.M | ✓ | 4/7 | 4/12 |
| 8 | 15% | ✓ | | | | EQUIPMENT - PRES. MAINT<br>- BREAKDOWN<br>- % USED by OTHER<br>- ALTERNATIVE | L.M | ✓ | 4/6 | 4/13 |
| 9 | 50% | ✓ | | | | DISASSEMBLE/ASSEMBLE | R.B. | ✓ | 4/7 | 4/10 |
| 10 | 50% | ✓ | | | | PARALLEL | R.B. | ✓ | 4/7 | 4/10 |
| 11 | | | ✓ | | | IN DATES | E.S | ✓ | 4/7 | 6/7 |
| 12 | | | ✓ | | | OUT DATES | E.S. | ✓ | 4/7 | 6/7 |
| 13 | | | | | | IE ASSESSMENT | RB/T.H | | 4/3 | ON GOING |

TS-form 1166/ © Copyright 1989, 88 by ☐ Time/system International Denmark Time/Design™ U.S. and Canada. All rights reserved.

EARL'S WISH LIST.

DECREASE - FLOW TIME
- SPACE REQ.
- LABOR HR.

IMPROVE CTRL/ORG. STRUC.

INCREASE OUTPUT (EFF)

**Daily Plan** — Thursday **13** April 1989

Week 15 103/262

| | Schedule | OK |
|---|---|---|
| 8: | MODEL PRESENTATION TO AB WORK CENTER TEAM | |
| 9: | TOUR MABPAB Bldg 95 | |
| 10: | TOUR MABPFF Bldg 2121 | |
| 11: | TOUR NEW Bldg for MABPAB | |
| 12: | | |
| 1: | | |
| 2: | DIVISION MAB Tom Jones<br>BRANCH MABE Charlie Sp[illegible] | |
| 3: | | |
| 4: | | |
| 5: | | |

| | Contact | OK |
|---|---|---|
| # | Activity | |

| | | 1st | DS | 2nd | DS | 3rd | DS | 4th | DS | | | |
|---|---|---|---|---|---|---|---|---|---|---|---|---|
| MBPFF | ZS | 4 | 3 1 | 2 | 2 0 | 1 | 1 0 | 1 | 1 0 | | | |
| | AS | 26 | 22 4 | 19 | 16 3 | 11 | 9 2 | 14 | 12 2 | | | |
| | BS | 14 | 12 2 | 11 | 9 2 | 9 | 8 1 | 7 | 6 1 | | | |
| | WS | 20 | 17 3 | 32 | 27 5 | 25 | 21 4 | 33 | 28 5 | | | |
| | YS | 39 | 33 6 / 16 | 39 | 33 6 / 16 | 28 | 24 4 / 11 | 19 | 16 3 / 11 | 54 | | |
| Total | | 103 | | 103 | | 74 | | 74 | | | | |
| | | | DS | | DS | | DS | | DS | | | |
| MBPAB | AS | 27 | 25 2 | 12 | 11 1 | 8 | 7 1 | 14 | 13 1 | 56 | 5 | 6 |
| | BS | 29 | 27 2 | 28 | 26 2 | 40 | 37 3 | 35 | 32 3 | 132 | 10 | 13 |
| | CS | 18 | 17 1 | 20 | 18 2 | 27 | 25 2 | 19 | 17 2 | 77 | 7 | 9 |
| | DS | 35 | 32 3 | 18 | 17 1 | 6 | 6 0 | 4 | 4 0 | 59 | 4 | 6 |
| | ES | 43 | 40 3 | 48 | 44 4 | 66 | 60 5 | 50 | 46 4 | 190 | 16 | 20 |
| | FS | 53 | 49 4 | 52 | 48 4 | 62 | 57 5 | 55 | 51 4 | 205 | 17 | 22 |
| Total | | 205 | / 15 | 178 | / 14 | 208 | / 16 | 177 | / 14 | 709 | 59 | 76 |

| MBPFF | | 1st | 2nd | 3rd | 4th |
|---|---|---|---|---|---|
| | 5 | 0 | 0 | 0 | 0 |
| ZS | 8 | 1 | 0 | 0 | 0 |
| | 10 | 2 | 2 | 1 | 1 |
| | 5 | 3 | 3 | 1 | 2 |
| AS | 8 | 5 | 3 | 2 | 3 |
| | 10 | 14 | 10 | 6 | 7 |
| | 5 | 2 | 1 | 1 | 1 |
| 3S | 8 | 3 | 2 | 2 | 1 |
| | 10 | 7 | 6 | 5 | 4 |
| | 5 | 3 | 4 | 4 | 5 |
| WS | 8 | 4 | 6 | 4 | 6 |
| | 10 | 10 | 17 | 13 | 17 |
| | 5 | 6 | 6 | 4 | 3 |
| TS | 8 | 7 | 7 | 5 | 3 |
| | 10 | 20 | 20 | 15 | 10 |
| | 5 | 1 | 1 | 1 | 1 |
| GS | 8 | 5 | 5 | 3 | 3 |
| | 10 | 10 | 10 | 7 | 7 |
| | | 103 | 103 | 74 | 74 |

| | | 1st | 2nd | 3rd | 4th |
|---|---|---|---|---|---|
| MBPFF | ZS | .04 882.43 | .02 344.67 | .01 275.44 | .01 344.67 |
| | | .04 | | | |
| | AS | .25 5,703.60 | .18 4,052.00 | .15 3,045.80 | .19 4,522.20 |
| | | .25 | | | |
| | BS | .14 3,062.40 | .11 2,466.40 | .12 2,397.20 | .09 2,090.20 |
| | | .4 | | | |
| | WS | .19 4,362.96 | .38 7,113.54 | .34 6,966.96 | .45 10,450.44 |
| | YS | .38 8,554.00 | .38 8,554.00 | .38 7,698.60 | .26 5,987.80 |
| Totals | | 22,567.39 | 22,530.61 | 20,384.00 | 23,395.31 |
| MBPAB | | | | | |
| | AS | 10,575.50 | 4,998.50 | 4,966.00 | 4,193.00 |
| | | .13 | .09 | .09 | .08 |
| | BS | 11,135.00 | 10,704.00 | 10,582.00 | 10,452.00 |
| | | .14 | [illegible] | .19 | [illegible] |
| | CS | [illegible] | [illegible] | [illegible] | [illegible] |
| | | [illegible] | [illegible] | [illegible] | [illegible] |
| | DS | [illegible] | [illegible] | [illegible] | [illegible] |
| | | [illegible] | [illegible] | .03 | [illegible] |
| | ES | 17,117.70 | [illegible] | 17,425.00 | 14,237.10 |
| | | .21 | [illegible] | .31 | .28 |
| | FS | 21,093.00 | [illegible] | 16,784.90 | 15,674.40 |
| | | .26 | .29 | .30 | .31 |
| | | 80,815.80 | [illegible] | 55,516.40 | 51,309.10 |

| | | 1st | 2nd | 3rd | 4th |
|---|---|---|---|---|---|
| 15009A | ZS | 20.66 | 20.87 | 10.87 | 20.87 |
| 15010 | ZS | - | - | - | - |
| 15011 | ZS | - | - | - | - |
| 15012 | ZS | - | - | - | - |
| 15013 | ZS | 138.46 | 138.46 | 69.23 | 138.46 |
| 15014 | ZS | 501.36 | 125.34 | 125.34 | 125.34 |
| 15017 | AS | 24.00 | 15.00 | 12.00 | 12.00 |
| 15020 | AS | 24.00 | 15.00 | 12.00 | 12.00 |
| 15021 | AS | 46.40 | 29.00 | 23.20 | 23.20 |
| 15022 | AS | 46.40 | 29.00 | 23.20 | 23.20 |
| 15023 | AS | - | 486.00 | 243.00 | 243.00 |
| 15026 | AS | 192.00 | 120.00 | 96.00 | 144.00 |
| 15027 | AS | 192.00 | 120.00 | 96.00 | 144.00 |
| 15028 | AS | 192.00 | 120.00 | 96.00 | 144.00 |
| 15029 | AS | 192.00 | 120.00 | 96.00 | 144.00 |
| 15030 | AS | 192.00 | 120.00 | 96.00 | 144.00 |
| 15031 | AS | 192.00 | 120.00 | 96.00 | 144.00 |
| 15059 | BS | - | - | - | 95.80 |
| 15070 | BS | - | - | - | - |
| 15073 | BS | 343.80 | 573.00 | 573.00 | 573.00 |
| 15074 | BS | 1,192.00 | 953.60 | 953.60 | 953.60 |
| 15075 | BS | 953.60 | 596.00 | 476.80 | 476.80 |
| 15076 | BS | 573.00 | 343.80 | 343.80 | - |
| 17297 | WS | 390.99 | 293.30 | 195.66 | 293.16 |
| 17298 | WS | 390.82 | 293.16 | 195.66 | 293.16 |
| 17299 | WS | 390.82 | 293.30 | 195.66 | 293.16 |
| 17300 | WS | 390.82 | 293.16 | 195.66 | 293.16 |
| 17301 | WS | 390.82 | 293.16 | 195.66 | 293.16 |
| 17302 | WS | 1,562.48 | 1,172.64 | 782.64 | 1,172.64 |
| 17303 | WS | 1,562.48 | 1,172.64 | 782.64 | 1,172.64 |
| 62055 | AS | 315.36 | 189.15 | 151.32 | 226.98 |
| 74945 | WS | 9,554.00 | 9,554.00 | 7,643.20 | 9,554.00 |
| 74950 | WS | | | | |
| 74960 | AS | 4,097.04 | 2,458.65 | 1,966.92 | 2,458.38 |
| Total | | 30,567.39 | 22,530.61 | 20,389.00 | 23,395.31 |

FY88

| | | MABAAB | MABAFF | |
|---|---|---|---|---|
| 1ST QTR | OCT | 235 | 103 | — 1ST QTR |
| 2ND QTR | JAN | 178 | 103 | — 2ND QTR |
| 3rd QTR | MAY | 208 | 74 | 3RD QTR |
| 4TH QTR | AUG | 177 | 74 | 177 - 74 4TH QTR |

IDIF

| | | |
|---|---|---|
| 1ST | 5.6 | 5.5 |
| 2 | 5.7 | 5.7 |
| 3 Rd | 5.9 | 5.8 |
| 4TH | 5.8 | 4.6 ? |

Current - % of 5's - 8's - 10's

| | | Days | | |
|---|---|---|---|---|
| MBPAB | WG-5 | 35 | .22 | |
| Assigned | WG 8 | 29 | .19 | |
| Re-wnel | WG 10 | 93 | .59 | |
| | | 157 | | .92 |
| | Swing | | | |
| | WG 5 | 5 | .38 | |
| | WG 8 | 1 | .08 | |
| | WG 10 | 7 | .54 | |
| | | 13 | | .08 |
| | | 170 | | |
| | WS | 6 | | |
| | Vo tech | 25 | | |
| | | 201 | | |
| PFF | Days | | | |
| | WG 5 | 12 | .17 | |
| | WG 8 | 15 | .21 | |
| | WG 10 | 45 | .62 | |
| | | 72 | | .85 |
| | Swing | | | |
| | WG 5 | 1 | .07 | |
| | WG 8 | 4 | .31 | |
| | WG 10 | 8 | .62 | |
| | | 13 | | .15 |
| | | 85 | | |
| | WS | 5 | | |
| | Vo tech | 4 | | |
| | | 94 | | |

FY89 DATA — Do not use — Act FY88

NAME: _____ ALC: OC DATE: _____ SAS RCC: MABPAB 0:46 FRIDAY, MARCH 24, 1989 SHEET ___ OF ___ 1

| SK | CODE | DESCRIPTN | QTR | QUANTITY AVAILABLE: WORK WEEK 1 | WORK WEEK 2 | WORK WEEK 3 | WEEK END 1 | WEEK END 2 | WEEK END 3 | HOLIDAY 1 | HOLIDAY 2 | HOLIDAY 3 | AVAILABLE HRS (PER SHIFT): WORK WEEK 1 | WORK WEEK 2 | WORK WEEK 3 | WEEK END 1 | WEEK END 2 | WEEK END 3 | HOLIDAY 1 | HOLIDAY 2 | HOLIDAY 3 |
|---|---|---|---|---|---|---|---|---|---|---|---|---|---|---|---|---|---|---|---|---|---|
| AS | | | 1 | 40 | | | | | | | | | 6.1 | | | | | | | | |
| AS | | | 2 | 39 | | | | | | | | | 6.2 | | | | | | | | |
| AS | | | 3 | 37 | | | | | | | | | 6.1 | | | | | | | | |
| AS | | | 4 | 37 | | | | | | | | | 6.1 | | | | | | | | |
| BS | | | 1 | 40 | | | | | | | | | 6.1 | | | | | | | | |
| BS | | | 2 | 40 | | | | | | | | | 6.2 | | | | | | | | |
| BS | | | 3 | 37 | | | | | | | | | 6.1 | | | | | | | | |
| BS | | | 4 | 37 | | | | | | | | | | | | | | | | | |
| BS | | | 4 | | | | | | | | | | 6.1 | | | | | | | | |
| CS | | | 1 | 21 | | | | | | | | | 6.1 | | | | | | | | |
| CS | | | 2 | 22 | | | | | | | | | 6.2 | | | | | | | | |
| CS | | | 3 | 21 | | | | | | | | | 6.1 | | | | | | | | |
| CS | | | 4 | 22 | | | | | | | | | 6.1 | | | | | | | | |
| DS | | | 1 | 43 | | | | | | | | | 6.1 | | | | | | | | |
| DS | | | 2 | 44 | | | | | | | | | 6.2 | | | | | | | | |
| DS | | | 3 | 44 | | | | | | | | | 6.1 | | | | | | | | |
| DS | | | 4 | 44 | | | | | | | | | 6.1 | | | | | | | | |
| ES | | | 1 | 87 | | | | | | | | | 6.1 | | | | | | | | |

FY88-1 277
FY88-2 275
-3 273
-4 276
(FY89 Hol)

NAME: _____ ALC: OC DATE: SAS _____ RCC: MABPAB 0:46 FRIDAY, MARCH 24, 1989 2

SHEET ___ OF ___

| SK CODE | DESCRIPTN | QTR | QUANTITY AVAILABLE WORK WEEK 1 | 2 | 3 | WEEK END 1 | 2 | 3 | HOLIDAY 1 | 2 | 3 | AVAILABLE HRS (PER SHIFT) WORK WEEK 1 | 2 | 3 | WEEK END 1 | 2 | 3 | HOLIDAY 1 | 2 | 3 |
|---|---|---|---|---|---|---|---|---|---|---|---|---|---|---|---|---|---|---|---|---|
| ES | | 2 | 66 | | | | | | | | | 6.2 | | | | | | | | |
| ES | | 3 | 69 | | | | | | | | | 6.1 | | | | | | | | |
| ES | | 4 | 70 | | | | | | | | | 6.1 | | | | | | | | |
| FS | | 1 | 66 | | | | | | | | | 6.1 | | | | | | | | |
| FS | | 2 | 64 | | | | | | | | | 6.2 | | | | | | | | |
| FS | | 3 | 65 | | | | | | | | | 6.1 | | | | | | | | |
| FS | | 4 | 66 | | | | | | | | | 6.1 | | | | | | | | |

110

WORK ORDERS

MAJPAB NAME BLDG 95 POST LOCATION SPECIFIC PROBLEM ORGN CODE

47222 D.Dillon
43201 G.Ison
43519 Hunt sh.
47222 HARBAUGH

| Problem | Post | Reported by | Date/Time | Work Order # | Completed |
|---|---|---|---|---|---|
| Overhead door | 1J | Wimberley | 15Nov88/ | #U7158 | ✓ JW |
| Leak in steam line | 17D 19D | Hensley | 25Nov88/ | U8095 | ✓ JH |
| Heaters will work | 31D 25C | Lenox | 28Nov88/ | U8110 | |
| Leak in steam line | 17D | Hensley | 2Dec88/ | U8577 | ✓ JH |
| Personnel door between 198 | | Johnson | 2Dec88 REOPENED 10Jan89 | U8644 | |
| Overhead light in vestibule CE | 11.25 | McBride | 5Dec88/0845 | U8715 | ✓ DMcB. |
| Restroom Commode | NW Corner | Bayler | 6Dec88/ | U8853 | ✓ WB. |
| Portico Elevator | 23K | Johnson | 8Dec88/ | 343-55 | |
| Urinal won't flush | 19C | Hensley | 13Dec88/ | U9603 | ✓ JH |
| Heaters in SE ladies restroom | | Lenox | 28 Dec88/1320 | W1646 | contractor's contact by Civil Eng. to turn up to right lin |
| 1 plug-ins bad insulation | 29H | Lenox | 29 Dec 88/1040 | W1736 | |
| No cover over thermostat | 29E | Lenox | 29 Dec 88/1040 | W737 | ✓ LS |
| Called Animal Center 4435 to talked to Mr Jenkins/Animal Control | 13H | McBride | 30 Dec. 88/1200 | no wk # | |
| LOOSE BOARDS IN ROOF TRUSSES | 21D 31C | GREENWOOD | 4 JAN 9:45 | W1072 | |
| SMALL DOOR DOOR BROKEN | 23C | HENSLEY | 5 JAN 1520 | W1225 | C/W JH |
| Door SE Corner Lock doesn't work | | Lenox | 11 Jan 0705 | W1708 | ✓ LS |
| LEAK IN STEAM P/P | 19D | HENSLEY | 17 JAN 0805 | W2132 | |
| LEAK IN RESTROOM (PAPER TOWEL DISP) | 19C | HENSLEY | 17 JAN 0805 | W2133 | |
| To remove Oil | 13H | Johnson | 20 Jan 0805 | W2546 | |
| Breaker won't stay on | 27C | Lenox | 24 Jan 89 0650 | W2778 | NOT Breaker box - Rivet box/changing sh |
| Air Comp. down | | McCoy | 1 Feb 0625 | | |
| Room [illegible] | | Johnson | 1 Feb 0940 | W3[illegible] | |
| [illegible] | I13 I10 | Johnson | 3 Feb 0850 | W3933 | |
| [illegible] | J-11 | McCoy | 3 Feb 1000 | W3940 | |
| [illegible] | [illegible] | Brown | 3 Feb 1500 | [illegible] | |
| [illegible] | 17D | Brown | 7 Feb 1500 | 890058-82 | |

4311

WORK ORDERS

MABPAB NAME BLDG 95 POST LOCATION SPECIFIC PROBLEM ORGN CODE 320

| Problem | Post | Reported by | Date/Time | Work Order # | Completed |
|---|---|---|---|---|---|
| Elec. box/no cover | 13C | Lenox | 10Feb89 12:00 pm | W4868 | ✓ Dd |
| Elect Breaker Switch | 15 | Brown Jerry | 14 Feb 89 0715 | W 5091 | CAN X |
| Leak in Roof | 25N 31N 17S | 13N Johnson | 14 FEB 89 1310 | W 5191 | |
| Heat Pump Heater | [illegible] 11-12 | Mustin | 15 Feb 89 17:30 | W 5392 | |
| Leak in [illegible] | 31N | Johnson | 27 Feb 89 [illegible] | W 6201 | |
| [illegible] Door | 13N | [illegible] | [illegible] | W 6408 | 2 March 89 0 8:15 |
| Personnel Door won't lock | 27B | Lenox | 2 Mar 89 12:00 | Pri: Urgent W6523 | |
| Mens Comm stopped up | 19C | Jacobs | 10 Mar 89 9:56 | W7383 | 11 MAR 89 [illegible] |
| [illegible] | | [illegible] | 17 MAR 89 1420 | W 8136 | |
| [illegible] | | [illegible] | 17 MAR 89 1420 | W 8136 | |
| [illegible] | | [illegible] | [illegible] | W 8752 | |
| [illegible] STEAM [illegible] | 19D | Jacobs | 3 APR 89 1352 | W 9676 | |
| MENS RESTROOM COMMODE STOPPED UP | 19C | HENSLEY | 7 APR 89 0805 | X 0072 | C/W |
| TURN ON HEAT | BLDG 95 | HENSLEY | 10 APR 89 0905 | X 220 | |

AF FORM MAY 83 3126 PREVIOUS EDITION WILL BE USED GENERAL PURPOSE (8½ x 11") GPO : 1985 O - 479-770

G FALLO
R. BOLANC

MABPAB FIXTURES

TI DELVP. CODES
FLIGHT CONTROLS

| EQUIP CODE NO. | NAME | PART NO. | QTY. | APPLICATI |
|---|---|---|---|---|
| F 335-01 | FILLET FLAP | SC65-1062T1 | | |
| " 02 | RUDDER | 590CJ1130 | 1 | E3A/135 |
| FE3A 01 | INBD FLAP | SC65-1063T1 | 1 | E3A/135 |
| " 02 | L'H/RH ELEVATOR | SC5-96190T1 | | E3A |
| F135- 01 | L'H/RH ELEVATOR | 590CJ1120 | 1 | E3A |
| F 335-03 | INBD AILERON | 590CJ1010 | 3 | 135 |
| " 04 | OTBD MAIN FLAP | 590CJ1030 | 1 | E3A/135 |
| F 135-02 | INBD MAIN FLAP | 590CJ10[illegible] | 1 | E3A/135 |
| F 335-05 | OTBD SPOILER | 590CJ1[illegible]60 | 1 | 135 |
| 07 | OTBD AILERON | 590C[illegible]000 | 3 | E3A/135 |
| F-335 10 | Fore Flap Holding | 80[illegible]92. | 4 | E3A/135 |
| 11 | | | | |
| | DOORS | | | |
| F 335-08 | OTBD MLG | 590CJ1110 | 4 | E3A/135 |
| 09 | INBD MFG | 590CJ1100 | 4 | E3a/135 |
| | MISC | | | |
| F 135-03 | Hog Nose Fairing | 65-10607-46 | 1 | 135 |
| " 04 | OTBD ENG STRUT | 590CJ1150 | 1 | 135 |
| 05 | INBD ENG STRUT | 590CJ1140 | 1 | 135 |
| 06 | BOTTOM PANEL TF33 P9 | FAJ64-8327-621 | 1 | 135 |
| 07 | TAIL CONE | 7627259 | 1 | 135 |
| 08 | KNEE CAP FAIRING | TJ5-85654 | 1 | 135 |
| 09 | BOOM POD FAIRING | | 1 | 135 |
| 10 | NOSE WHEEL FAIRING | 2FAJ5-73139-1 | 1 | 135 |
| 11 | NOSE WHEEL FAIRING | FRJ5-73139-1 | | 135 |
| 12 | NOSE WHEEL FAIRING | FAJ5-73139-1 | 1 | 135 |
| " 18 | BOOM TAIL CONE | 600CJ809 | 3 | 135 |
| | COWLING | | | |
| F33A-03 | RH SIDE COWL | SC65-254[illegible] | 1 | E3A |
| " 04 | LH SIDE COWL | SC65-25[illegible]9T1 | 1 | E3A |
| F135-13 | RH SIDE COWL J57 | 3AJ5-[illegible]5638 | 2 | 135 |
| " 14 | LH SIDE COWL J57 | 3AJ[illegible]85637 | 2 | 135 |
| [illegible] | RH SIDE COWL TF33P5 | 00[illegible]5-64-8327-488 | 1 | 135 |
| 16 | L'H SIDE COWL TF33P5 | [illegible]275-64-8327-487 | 1 | 135 |
| FE3A- 05 | NOSE COWL | 204-70099-3ASMJ | 1 | E3A |
| " 06 | NOSE COWL | 204-70099-TRMJ | 1 | E3A |
| F135 -17 | NOSE COWL J57 | AJ5-85655 | 1 | 135 |

B-52
MABPFF FIXTURES

TI DEVL. CODES

| EQUIP. CODE NO. | NAME | PART NO. | QTY |
|---|---|---|---|
| FB 52-01 | ELEV/RUDDER BALANCE | RP046 | 1 |
| 02 | BOMB BAY DOOR (LARGE) | FME35-30600-3 | 2 |
| 03 | BOMB BAY DOOR (LARGE) | FME35-30600-1 | 2 |
| 04 | BOMB BAY DOOR (LARGE) | FME35-30600-2 | 2 |
| 05 | BOMB BAY DOOR (SMALL) | AJ5-48467-3 | 1 |
| 06 | BOMB BAY DOOR (SMALL) | AJ5-46867-4 | 2 |
| 07 | BOMB BAY DOOR (SMALL) | AJ5-46868-28 | 1 |
| 08 | BOMB BAY DOOR (SMALL) | AJ5-46868-27 | 1 |
| FB 52-09 | BOMB BAY DOOR (SMALL) | AJ5-46867-3 | 1 |

## MABPAB EQUIPMENT

| EQUIP. CODE NO. | NAME | MODEL | QUANTITY |
|---|---|---|---|
| E 135-01 | Bending MACHINE (HAND) | 416 | 1 |
| " 02 | LARGE BAND SAWS | | 2 |
| " 03 | ROTEX PUNCH PRESS | | 1 |
| " 04 | DRILL' (FLOOR MODEL) | 1200-118 | 1 |
| " 05 | GRINDER FLOOR MODEL, (2WHEEL ELECT) | | 1 |
| " 06 | PRESS BRAKE (CHICAGO STEEL CO.) | 80023 | 1 |
| " 07 | POWER SQUARING MACHINE | 002741 | 1 |
| " 08 | PRESS BRAKE | 4560G | 1 |
| " 09 | SMALL METAL SHEAR | 241-C | 1 |
| " 10 | SMALL DRILL PRESS | | 1 |
| " 11 | GRINDER 1WHEEL,(FLOOR MODEL) | WF6566 | 1 |
| " 12 | PUNCH PRESS | P41P | 1 |
| " 13 | SANDER (BELT) FLOOR MOD. | | 1 |
| " 15 | BENDING MACHINE (HAND) | BB-316 | 1 |

MABPFF EQUIPMENT

| EQUIP. CODE NO. | NAME | MODEL #TYPE | QTY. |
|---|---|---|---|
| EB 52-01 | DOUBLE SANDER DISK (FLOOR MODEL) | | 1 |
| 02 | DRILL PRESS (FLOOR MODEL) | | 4 |
| 03 | GRINDING MACHINE | WISSOTA E8M | 1 |
| 04 | WELDER | MILLER 330ST | 1 |
| 05 | BRAKE, MECH | | 1 |
| 06 | BRAKE, MECH FORMING ROLLER | 0617 | 2 |
| 07 | BRAKE, HAND | NATIONAL | 2 |
| 08 | METAL STREACHER (FLOOR MOD) | | 1 |
| 09 | PRESS ARBOR | FAMCO | 2 |
| 10 | PUNCH, MECH | ROTEX | 1 |
| 11 | POWER SHEAR | MASPERI CM500A | 1 |
| 12 | DIMPLER | 300 | 1 |
| 13 | BRAKE PRESS | 65M75 | 1 |
| 14 | DOALL SAW | 3613-2 | 1 |

SKILL CODES

MABPAB

| | |
|---|---|
| _____*AS | LEFT HAND SIDE COWL |
| _____*BS | RIGHT HAND SIDE COWL |
| _____*CS | NOSE COWL |
| _____*DS | FLAPS |
| _____*ES | FLIGHT CONTROLS |
| _____*FS | MISC |

MABPFF

| | |
|---|---|
| _____*AS | SPOILERS, HATCHES, TIP GREAR, POP-UP ANTENNA, SUPPLY B/B DOORS |
| _____*WS | FLAPS, RUDDERS, ELEVATORS. |
| _____*YS | NOSE COWL, SIDE COWL |
| _____*3S | PDM |

MABPCA

| | |
|---|---|
| _____*WL | EQUIPMENT CLEANERS |

MABPCB

| | |
|---|---|
| _____*B3 | PAINTERS |

MABPCD

| | |
|---|---|
| _____*MQ | MOVERS |
| _____*CQ | CRANE OPERATORS |
| _____*EQ | CHECKERS |

| | |
|---|---|
| AA | SYSTEMS (ELECTRIC) |

| [illegible] | No. [illegible] | [illegible] No. Assignment |
|---|---|---|
| 15175A | 3 | 175-1, 175-2, [illegible] |
| 15175A | 5 | [illegible] |
| [illegible] | | [illegible] |
| [illegible] | 12 | [illegible] 151-2 [illegible] |
| [illegible] | | [illegible] 153-3 [illegible] |
| [illegible] | | [illegible] 153-4 [illegible] 151-4 [illegible] |
| [illegible] | | |
| | | [illegible] |
| Fan flaps 15[illegible]A - [illegible] 15[illegible]A | | [illegible] |
| [illegible] | | |
| 15236A | 4 | 236-1, 236-2, 236-3, 236-4 |
| 15237A | [illegible] | [illegible] |
| 15[illegible]A | 5 | [illegible] |
| 15250A | | [illegible] |
| | | [illegible] |

[illegible]

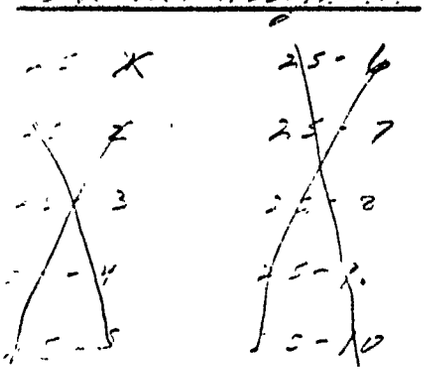

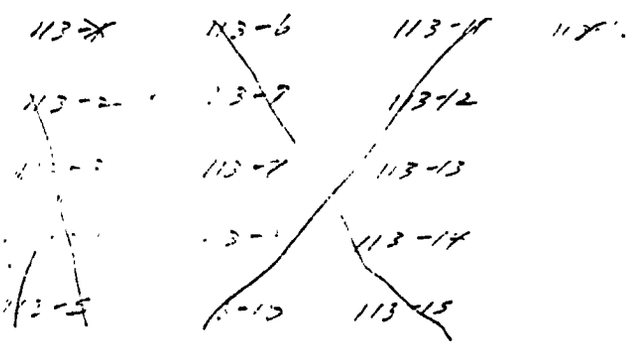

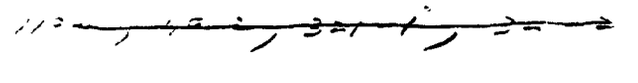

| [illegible] | [illegible] | Code Nee Assignment |
|---|---|---|
| 1S0[illegible] | 10 | [illegible] X, 25-6, [illegible] 2, 25-7, [illegible] 3, [illegible] 8, [illegible] 4, 25-[illegible], [illegible] 5, [illegible] 10 |
| 1S11[illegible] | 16 | 113-X, 113-6, 113-11, 11[illegible], 113-2, [illegible]3-7, 113-12, [illegible], 113-7, 113-13, [illegible], [illegible]3-[illegible], 113-14, 113-5, [illegible]-13, 113-15 |
| 1S1[illegible] | 7 | 11[illegible] |
| 1S120A + 1S300A | 4 | 12[illegible] |
| 1S[illegible] + 1S137A | | [illegible] |
| 1S140A | 5 | 14[illegible] |
| [illegible] | 16 | [illegible] |

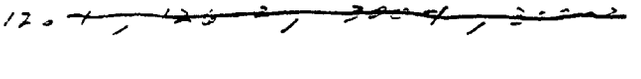

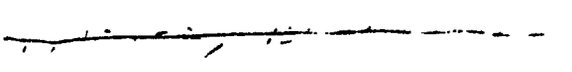

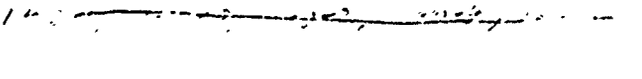

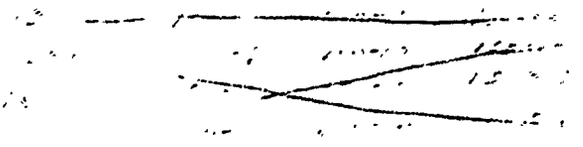

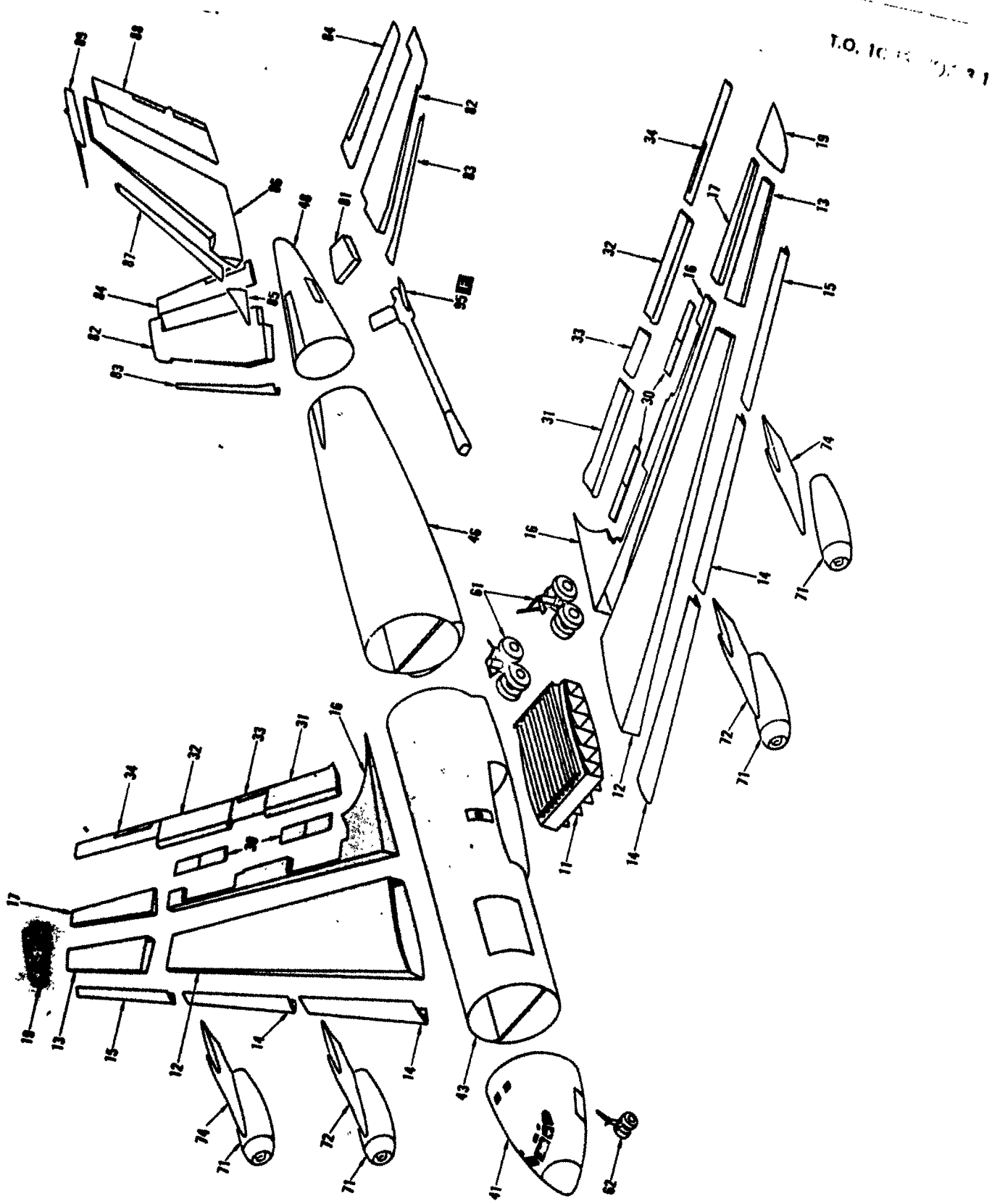


J57-43 OR J57-59 TURBOJET ENGINES

Figure 1-3. Major Structural Group Breakdown (Sheet 1 of 4)

| AIRCRAFT SECTION NO. | DRAWING TITLE | DWG NO. |
|---|---|---|
| 11 | WING CENTER SECTION ASSY | 5-73111 |
| 12 | INBOARD WING ASSY | 5-89312 |
| 13 | OUTBOARD WING ASSY | 5-89300 |
| 14 | INBOARD WING LE INSTL | 5-73114 |
| 15 | OUTBOARD WING LE INSTL | 5-73115 |
| 16 | INBOARD WING TE INSTL | 5-73116 |
| 17 | OUTBOARD WING TE INSTL | 5-73117 |
| 19 | WINGTIP INSTL | 5-73119 |
| 30 | WING SPOILER INSTL | 5-73130 |
| 31 | INBOARD FLAP INSTL | 5-73131 |
| 32 | OUTBOARD FLAP INSTL | 5-73132 |
| 33 | INBOARD AILERON INSTL | 5-73133 |
| 34 | OUTBOARD AILERON INSTL | 5-73134 |
| 41 | BODY INSTL - SECTION 41 | 5-71741 |
| 43 | BODY INSTL - SECTION 43 | 5-71743 |
| 46 | BODY INSTL - SECTION 46 | 5-71746 |
| 48 | BODY INSTL - SECTION 48 | 5-71748 |
| 61 | MAIN LANDING GEAR INSTL | 5-83045 |
| | MAIN LANDING GEAR INSTL I | 458-58100 |
| 62 | NOSE LANDING GEAR INSTL | 5-83046 |
| 71 | COWL INSTL A | 50-3371 |
| | COWL INSTL B | 65-10609 |
| | COWL INSTL C I | 65C18556, 65C18603, 458-58021 |

| AIRCRAFT SECTION NO. | DRAWING TITLE | DWG NO. |
|---|---|---|
| 72 | INBOARD STRUT INSTL A | 5-85613 |
| | INBOARD STRUT INSTL B | 65-18892 |
| | INBOARD STRUT INSTL B D | 35 35325 |
| | INBOARD STRUT INSTL C I | 65C18500 |
| 74 | OUTBOARD STRUT INSTL A | 5 85614 |
| | OUTBOARD STRUT INSTL B | 65 18893 |
| | OUTBOARD STRUT INSTL B D | 35 35326 |
| | OUTBOARD STRUT INSTL C E | 65C18500 |
| 81 | STABILIZER CENTER SECTION INSTL | 5 71781 |
| 82 | STABILIZER INSTL A | 5-71782 |
| | STABILIZER INSTL B D (EXTENDED) | 69-12778 |
| | STABILIZER INSTL (EXTENDED) B C D E | 35-35322 |
| 83 | STABILIZER LE INSTL A | 5-71783 |
| | STABILIZER LE INSTL (EXTENDED) B C D E | 65-16737 |
| 84 | ELEVATOR BALANCE ASSY | 5-71784 |
| 85 | DORSAL FIN INSTL | 5-71785 |
| 86 | VERTICAL TAIL INSTL | 65-8624 |
| 76 | RUDDER BALANCE ASSY | 50-9788 |
| 88 | RUDDER ASSY | 65-3495 |
| 89 | FIN TIP ASSY | 50-11379 |
| 95 | RUDDEVATOR I | 5-96159 |

**NOTE**

- A J57-43 OR J57-59 TURBOJET ENGINES.
- B TF33-P-5, TF33-P-9, OR TF33-PW-102 TURBOFAN ENGINES.
- C F108-CF-100 TURBOFAN ENGINES.
- D AIRCRAFT AFTER T.O. 1C-135-1135.
- E AIRCRAFT AFTER T.O. 1C-135(K)A-1112.
- I AIRCRAFT WITH AIR REFUELING BOOM.

Figure 1-3. Major Structural Group Breakdown (Sheet 4 of 4)

[illegible] WORK CO[illegible] [illegible] PAGE [illegible]

[illegible] NR [illegible] [illegible] SECTION/RCO [illegible] DATE SCHED [illegible]
MBPAB [illegible]

[illegible] NUMBER [illegible] 19. ITEM SERIAL NR

[illegible] MODEL/DESIGN/SERIES [illegible] STOCK NR
[illegible] 135

[illegible] MISC [illegible] 14. NOUN/END ITEM NOUN
[illegible] FLAP, OUTBD
MICHAEL TYTANIC/MABEFS/[illegible]

[illegible] TECH DATA/OPTIONAL
1. STATEMENT OF WORK FILE
NO. [illegible]
2. FILL IN ANY ADDT'L
WORK REQUIREMENTS.

| P/N | | NSN | C/N |
|---|---|---|---|
| [illegible] | [illegible] | [illegible] | [illegible] |
| [illegible] | [illegible] | [illegible] | [illegible] |
| [illegible] | [illegible] | [illegible] | [illegible] |
| [illegible] | [illegible] | [illegible] | [illegible] |
| [illegible] | [illegible] | [illegible] | [illegible] |
| [illegible] | [illegible] | [illegible] | [illegible] |
| [illegible] | [illegible] | [illegible] | [illegible] |
| [illegible] | [illegible] | [illegible] | [illegible] |
| [illegible] | [illegible] | [illegible] | [illegible] |
| [illegible] | [illegible] | [illegible] | [illegible] |

[illegible] 1/4/88

| [illegible] | [illegible] | 12. WORK TO [illegible] | [illegible] | [illegible] | [illegible] |
|---|---|---|---|---|---|
| | | [illegible] | [illegible] | / | / |
| | 040 MBPAB | [illegible] ASSURE FOREFLAP [illegible] WILL ACCOMPANY APPROPRIATE ITEM. REQ'D_____ NOT REQ'D _____ | [illegible] | / | / |
| [illegible] MBPAB MPT 4/1/88 | 050 [illegible] | [illegible] LOWER [illegible] REQ'D_____ NOT REQ'D_____ | [illegible] | / | / |
| [illegible] | ~~[illegible]~~ 030 | PLUG ALL DRAIN HOLES TO PREVENT [illegible] INTERIOR OF [illegible] NOTE: OMIT IF [illegible] GENERATED FLAP. REQ'D_____ NOT [illegible] | 4W | / | / |
| [illegible] | ~~[illegible]~~ MBPCA 020 | CLEAN AND STRIP PAINT FROM FLAP (INCLUDE FLAP TRACK WELL) IAW 1C-[illegible] (K)A-3-4, SEC. XI, NOTE: ON PDM LINE GENERATED FLAP CLEAN FLAP TRACK WELL AND CARRIAGE ASSYS. ASSURE ENTIRE ASSY. IS FREE OF ALL DIRT, PAINT AND GREASE BEFORE [illegible] | | / | / |
| [illegible] | [illegible] | ACCOMPLISH INTERIOR WASH [illegible] AND LOWER FLAP FOR CORROSION. MOVE TO MBPAB. REQ'D_____ NOT [illegible] | [illegible] | / | / |

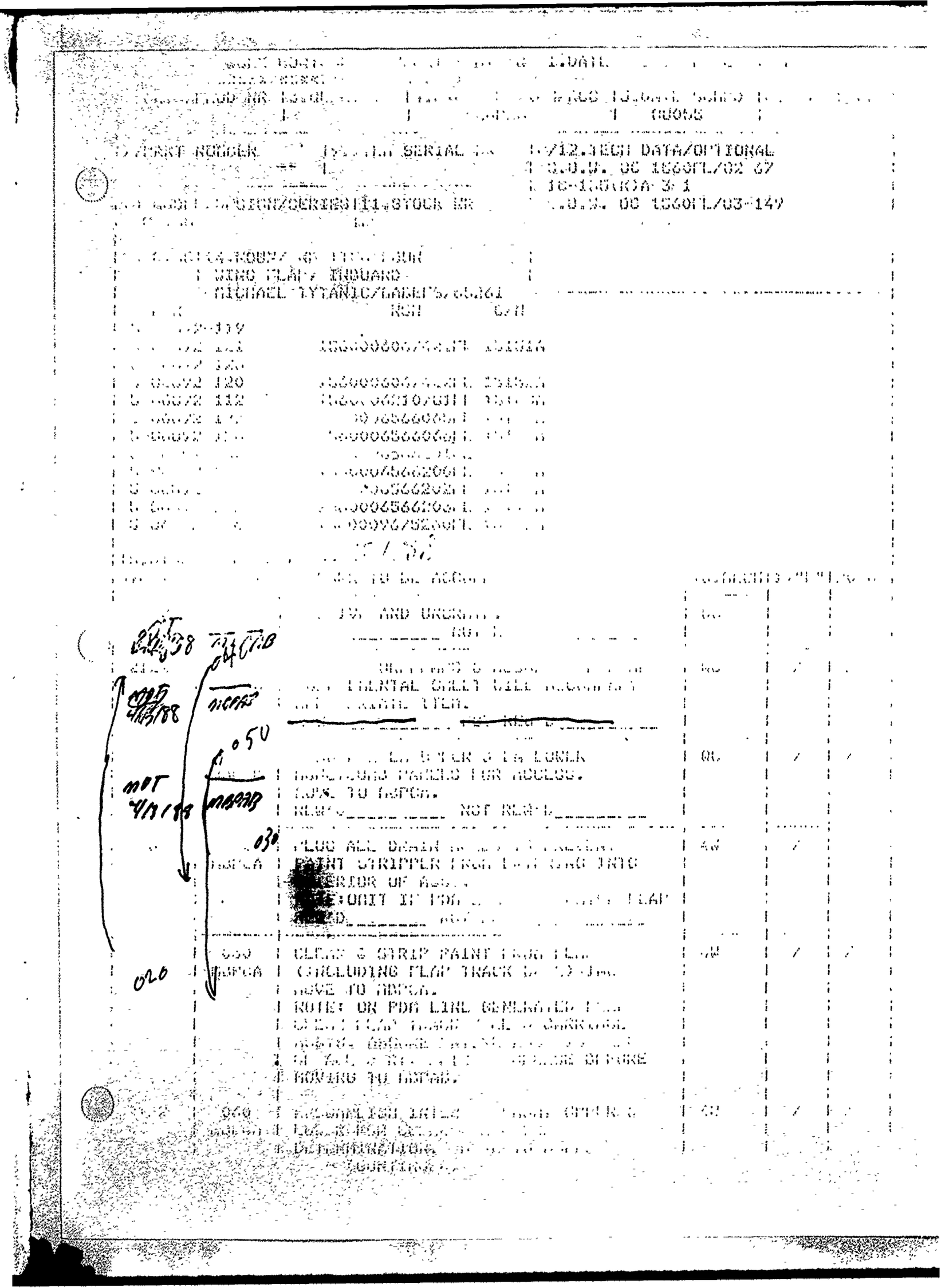

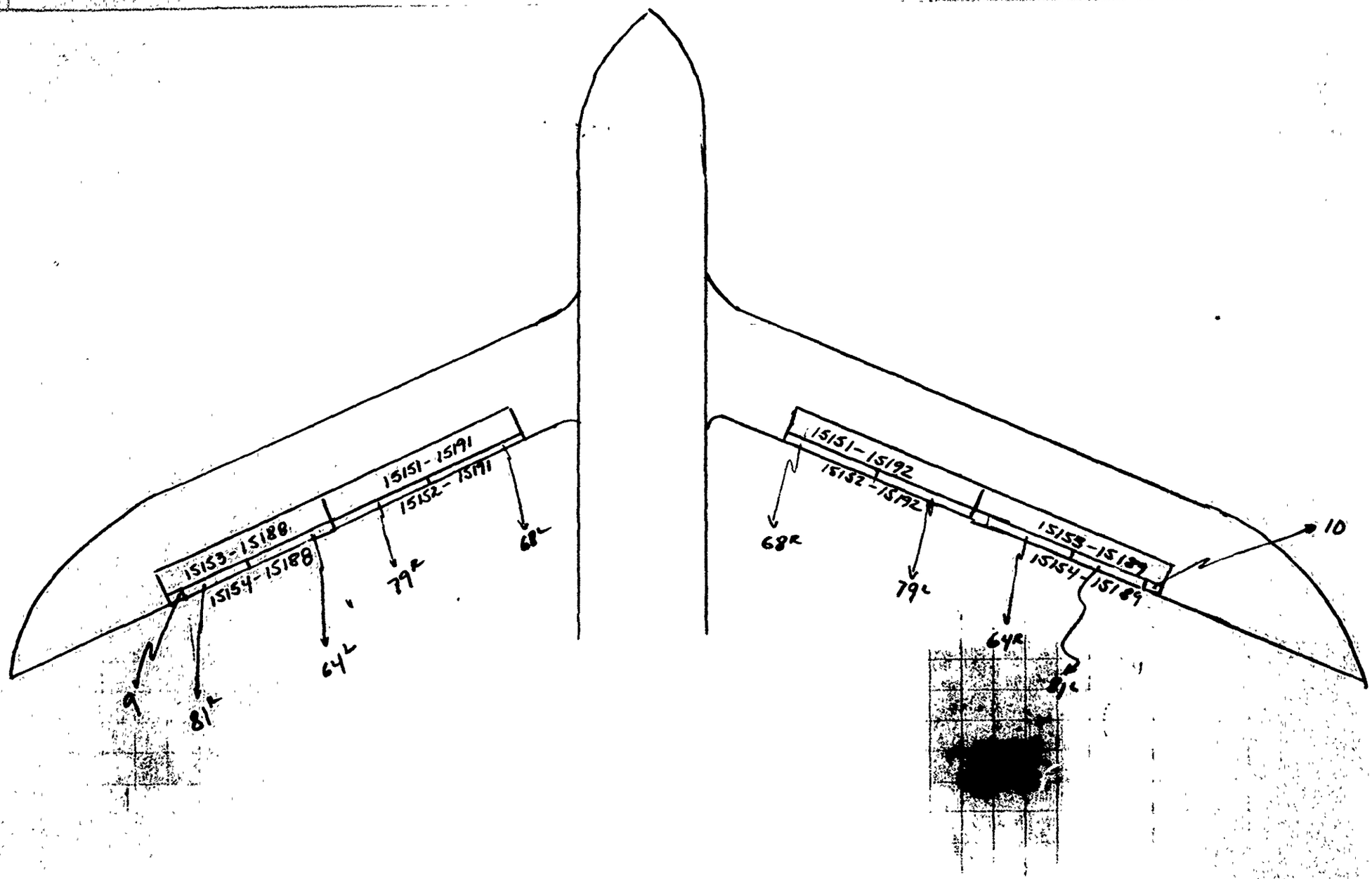
15153-15188
15154-15188
15151-15191
15152-15191
15151-15192
15152-15192
15153-15189
15154-15189
9
81R
64L
79R
68L
68R
79L
64R
81L
10

# SHOP FLOW DAY STANDARD

Reference AFLCR 66-11

CONTROL NO. _____ DATE _____

Shop Flow Days (Std.calendar days) = $\frac{A((B / C) + D + E)}{F}$

Where :

A = CONVERSION FACTOR, Changing workdays to calendar days.
5 day week = 1.46
6 day week = 1.21
7 day week = 1.03 A = ___

B = END ITEM STD HRS, expressed in hours, to two decimal places.
Note 1. When an operation with a labor standard takes place concurrent to a process support or unique process support operation (factors D or E below), use only the longer time.

Note 2. If the same operation is performed on the same part at the same time by multiple workers, divide the total standard time by the number of workers. B = _____

C = RCC CONSTANT, Direct labor hours, expressed as a percentage of total hours available. Subtract indirect labor factors for duty codes .24, .25, .26, and .29 from 1.00. Reference GO37G-EHI-MI-MEH. Round off answer to four decimal places.
C = _____

D = PROCESS SUPPORT, expressed in hours, to two decimal places. An average time value for each end item, for transportation time between RCCs, packing, unpacking, and awaiting Maintenance time.
D = _____

E = UNIQUE PROCESS SUPPORT, expressed in hours, to two decimal places. An average time value for each end item, for processes, such as plating, heat treating, welding, painting, etc. E = _____

F = SHIFT HOURS, expressed in whole hours. Normally 8 hours in peacetime. Peacetime process or test times that exceed 8 hours are an exception (e.g. plating, heat treating, etc.). If the number of shifts are temporarily changed (3 months or less), the number of flow days should not be modified. F = _____

Flow days = $\frac{A((B / C) + D + E)}{F}$ FD = _____

28 Feb 89

Al,

Attached is the shop rate information that you asked me to provide. I've also included a list of the routing symbols and their associated unit names. Note that on the computer output routing symbols are reduced from the normal MABPAB to MBPAB.

You also asked that I determine the amount of maskant utilized per year. Personnel in the MIC report that a quantity of forty gallons per month or four hundred and eighty per year is utilized.

GENE W. LEITERMAN
OC-ALC TI Program Manager

DATE : 13-Mar-89
FILE : OCRATE

FY 89
OC-ALC
RCC RATES

| RCC | DIRECT LABOR | DIRECT MAT'L | OTHER DIRECT | OVHD IND MAT'L | OVHD OTHER | G & A | TOTAL | TOTAL LESS DIR MAT'L |
|---|---|---|---|---|---|---|---|---|
| MABPAB | 19.86 | 14.61 | 0.00 | 5.34 | 11.01 | 5.34 | 56.16 | 41.55 |
| MABPFF | 19.65 | 3.46 | 0.00 | 1.67 | 9.05 | 5.34 | 39.17 | 35.71 |
| MAEPSB | 16.79 | 0.00 | 0.00 | 2.92 | 11.11 | 5.19 | 36.01 | 36.01 |
| MATPAA | 17.40 | 58.69 | 0.00 | 1.33 | 11.81 | 5.19 | 94.42 | 35.73 |
| MATPAB | 18.08 | 122.09 | 0.00 | 2.34 | 13.19 | 5.19 | 160.89 | 38.80 |
| MATPAT | 19.71 | 0.00 | 0.00 | 1.23 | 16.55 | 5.19 | 42.68 | 42.68 |
| MATPCA | 18.17 | 39.11 | 0.00 | 2.94 | 14.53 | 5.19 | 79.94 | 40.83 |
| MATPCB | 16.96 | 81.85 | 0.00 | 1.87 | 14.59 | 5.19 | 120.46 | 38.61 |
| MATPCC | 17.87 | 49.10 | 0.00 | 1.28 | 9.92 | 5.19 | 83.36 | 34.26 |
| MATPCD | 17.86 | 45.43 | 0.00 | 1.60 | 15.75 | 5.19 | 85.83 | 40.40 |
| MATPCM | 17.16 | 0.00 | 0.00 | 1.19 | 13.51 | 5.19 | 37.05 | 37.05 |
| MATPFA | 18.33 | 11.92 | 0.00 | 1.36 | 13.92 | 5.19 | 50.72 | 38.80 |
| MATPFE | 18.31 | 12.21 | 0.00 | 1.27 | 11.85 | 5.19 | 48.83 | 36.62 |
| MATPFF | 18.42 | 19.74 | 0.00 | 1.26 | 18.44 | 5.19 | 63.05 | 43.31 |
| MATPHA | 18.78 | 53.16 | 0.00 | 1.84 | 13.35 | 5.19 | 92.32 | 39.16 |
| MATPHB | 18.69 | 100.30 | 0.00 | 1.84 | 12.65 | 5.19 | 138.67 | 38.37 |
| MATPHE | 17.51 | 0.00 | 0.00 | 1.84 | 13.38 | 5.19 | 37.92 | 37.92 |
| MATPIA | 18.13 | 35.55 | 0.00 | 2.61 | 14.99 | 5.19 | 76.47 | 40.92 |
| MATPIM | 18.90 | 5.79 | 0.00 | 3.08 | 16.15 | 5.19 | 49.11 | 43.32 |
| MATPIN | 21.17 | 1.30 | 0.00 | 2.44 | 23.07 | 5.19 | 53.17 | 51.87 |
| MATPIW | 19.28 | 39.86 | 0.00 | 3.47 | 14.19 | 5.19 | 81.99 | 42.13 |

OC-ALC
RCC CODES

| | |
|---|---|
| MBPAB | Sheetmetal Backshop Unit |
| MBPFF | MISTR Sheetmetal Unit |
| MTPAA | Cabin Pressure Regulator & Valve Unit |
| MTPAB | Turbine Powered Access & Missle Maint Unit |
| MTPAT | Air Accessories Testing Unit |
| MTPCA | Electrical Accessories Unit |
| MTPCB | Accessories Unit |
| MTPCC | Electro-Mechanical Accessories Unit |
| MTPCD | Governor, Misc Eng Access Overhaul & Test Unit |
| MTPCM | Machine Unit |
| MTPFA | Automatic Pilot Unit |
| MTPFE | Engine Instrument Unit |
| MTPFF | Flight Control Unit |
| MTPHA | General Transmission Overhaul Unit |
| MTPHB | Specialized Transmission Overhaul Unit |
| MTPHE | Machine Shop Unit |
| MTPIA | Sheetmetal Unit |
| MTPIM | Machine Shop Unit |
| MTPIN | Numeric Control Unit |
| MTPIW | General Welding Unit |
| MEPSG | Plating Unit |

NAME:
BOLANOS

ALC: OC RCC: MABPAB

| ITEM CODE | AIRCRAFT MODEL | WCD # | WL TYPE | FLOAT STOCK | ACT 1st | PRODUCTION 2nd | / QTR 3rd | 4th | # ENV | MAX WIP | STD HRS | 80/20 VALUE | 80/20 WT |
|---|---|---|---|---|---|---|---|---|---|---|---|---|---|
| 15025A | C-135 | 15025A | 4 | | 56 | 55 | 54 | 75 | | 15 | 163.5 | 9810 | 19.8% |
| 15113A | C-135 | 15113A | 4 | | 60 | 60 | 53 | 70 | | 22 | 147.7 | 8974 | 18.1% |
| 15119A | C-135 | 15119A | 4 | | 13 | 16 | 20 | 20 | | 4 | 89.8 | 1548 | 3.1% |
| 15321A | C-135 | 15119A | 4 | | 13 | 16 | 20 | 20 | | 4 | 90.2 | 1557 | 3.1% |
| 15126A | C-135 | 15126A | 4 | | 13 | 16 | 20 | 20 | | 5 | 88.7 | 1531 | 3.1% |
| 15300A | C-135 | 15126A | 4 | | 13 | 16 | 20 | 20 | | 5 | 98.3 | 1696 | 3.4% |
| 15136A | C-135 | 15136A | 4 | | 13 | 18 | 23 | 22 | | 4 | 79.2 | 1504 | 3.0% |
| 15137A | C-135 | 15136A | 4 | | 13 | 16 | 23 | 21 | | 4 | 79.2 | 1445 | 2.9% |
| 15140A | C-135 | 15140A | 4 | | 1 | 0 | 4 | 40 | | 8 | 51.7 | 581 | 1.2% |
| 15150A | C-135 | 15150A | 4 | | 25 | 25 | 38 | 66 | | 17 | 85.2 | 3278 | 6.6% |
| 15175A | C-135 | 15175A | 4 | | 25 | 12 | 8 | 26 | | 3 | 73.9 | 1311 | 2.7% |
| 15178A | C-135 | 15178A | 4 | | 36 | 50 | 59 | 75 | | 7 | 19.0 | 1043 | 2.1% |
| 15188A | C-135 | 15153A | 4 | | 13 | 13 | 15 | 17 | | 8 | 120.7 | 1751 | 3.5% |
| 15189A | C-135 | 15153A | 4 | | 13 | 15 | 15 | 17 | | 8 | 120.7 | 1811 | 3.7% |
| 15188A | C-135 | 15154A | 4 | 2 | | | | | | | 15.0 | 900 | 1.8% |
| 15189A | C-135 | 15154A | 4 | 2 | | | | | | | 15.0 | 900 | 1.8% |
| 15191A | C-135 | 15151A | 4 | | 11 | 11 | 16 | 17 | | 7 | 118.7 | 1632 | 3.3% |
| 15192A | C-135 | 15151A | 4 | | 6 | 6 | 10 | 17 | | 8 | 118.7 | 1158 | 2.3% |
| 15191A | C-135 | 15152A | 4 | 2 | | | | | | | 15.0 | 825 | 1.7% |
| 15192A | C-135 | 15152A | 4 | 2 | | | | | | | 15.0 | 585 | 1.2% |
| 15236A | C-135 | 15236A | 4 | | 6 | 10 | 9 | 9 | | 4 | 121.6 | 1034 | 2.1% |
| 15237A | C-135 | 15237A | 4 | | 8 | 8 | 8 | 8 | | 1 | 28.6 | 229 | 0.5% |
| 15249A | C-135 | 15249A | 4 | | 13 | 18 | 23 | 20 | | 3 | 110.5 | 2045 | 4.1% |
| 15250A | C-135 | 15249A | 4 | | 13 | 18 | 23 | 20 | | 3 | 111.0 | 2054 | 4.2% |
| 15236A | C-135 | 15236B | 4 | 2 | | | | | | 1 | 28.6 | 243 | 0.5% |
| | | | | | | | | | | | | 49443 | 1 |

MABPABWL.PP
REQ. MLW OC

# WORKLOAD PROFILE
TINKER, AFB OKLAHOMA CITY, OK.

4/28/1989
RCC = MABPAB

| ITEM NUMBER | AIRCRAFT MODEL | WCD | W T | FLT STK | ACTUAL PROD./QTR Q1 | Q2 | Q3 | Q4 | EN UN | MAX WIP | STD HOURS | 80/20 WT |
|---|---|---|---|---|---|---|---|---|---|---|---|---|
| 15025A | C-135 | 15025A | 4 | | 56 | 55 | 54 | 75 | | 30 | 163.5 | 19.8 |
| 15113A | C-135 | 15113A | 4 | | 60 | 60 | 53 | 70 | | 44 | 147.7 | 18.1 |
| 15119A | C-135 | [illegible]9A | 4 | | 13 | 16 | 20 | 20 | | 8 | 89.8 | 3.1 |
| 15321A | C-135 | [illegible]9AA | 4 | | 13 | 16 | 20 | 20 | | 8 | 90.2 | 3.1 |
| 15126A | C-135 | 15126A | 4 | | 13 | 16 | 20 | 20 | | 10 | 88.7 | 3.1 |
| 15300A | C-135 | 15126AA | 4 | | 13 | 16 | 20 | 20 | | 10 | 98.3 | 3.4 |
| 15136A | C-135 | 15136A | 4 | | 13 | 18 | 23 | 22 | | 8 | 79.2 | 3.0 |
| 15137A | C-135 | 15136AA | 4 | | 13 | 16 | 23 | 21 | | 8 | 79.2 | 2.9 |
| 15140A | C-135 | 15140A | 4 | | 1 | 0 | 4 | 40 | | 16 | 51.7 | 1.2 |
| 15150A | C-135 | 15150A | 4 | | 25 | 25 | 38 | 66 | | 34 | 85.2 | 6.6 |
| 15175A | C-135 | 15175A | 4 | | 25 | 12 | 8 | 26 | | 6 | 73.9 | 2.7 |
| 15178A | C-135 | 15178A | 4 | | 36 | 50 | 59 | 75 | | 14 | 19.0 | 2.1 |
| 15188A | C-135 | 15153A | 4 | | 13 | 13 | 15 | 17 | | 16 | 120.7 | 3.5 |
| 15189A | C-135 | 15153AA | 4 | | 13 | 15 | 15 | 17 | | 16 | 120.7 | 3.7 |
| 15188ASUB1 | C-135 | 15154A | 4 | 2 | | | | | | 50 | 15.0 | 1.8 |
| 15189ASUB1 | C-135 | 15154AA | 4 | 2 | | | | | | 50 | 15.0 | 1.8 |
| 15191A | C-135 | 15151A | 4 | | 11 | 11 | 16 | 17 | | 14 | 118.7 | 3.3 |
| 15192A | C-135 | 15151AA | 4 | | 6 | 6 | 10 | 17 | | 16 | 118.7 | 2.3 |
| 15191ASUB1 | C-135 | 15152A | 4 | 2 | | | | | | 50 | 15.0 | 1.7 |
| 15192ASUB1 | C-135 | 15152AA | 4 | 2 | | | | | | 50 | 15.0 | 1.2 |
| 15236A | C-135 | 15236A | 4 | | 6 | 10 | 9 | 9 | | 8 | 121.6 | 2.1 |
| 15237A | C-135 | 15237A | 4 | | 8 | 8 | 8 | 8 | | 2 | 28.6 | 0.5 |
| 15249A | C-135 | 15249A | 4 | | 13 | 18 | 23 | 20 | | 6 | 110.5 | 4.1 |
| 15250A | C-135 | 15249AA | 4 | | 13 | 18 | 23 | 20 | | 6 | 111.0 | 4.2 |
| 15237ASUB1 | C-135 | 15236B | 4 | 2 | | | | | | 2 | 28.6 | 0.5 |

OC - MABPAB

| PCN | WCD |
|---|---|
| ********** | ********* |
| 15025A | 15025A |
| 15113A | 15113A |
| 15119A | 15119A |
| 15126A | 15126A |
| 15136A | 15136A |
| 15137A | 15136AA |
| 15140A | 15140A |
| 15150A | 15150A |
| 15175A | 15175A |
| 15178A | 15178A |
| 15188A | 15153A |
| 15188ASUB1 | 15154A |
| 15189ASUB1 | 15154AA |
| 15189A | 15153AA |
| 15191A | 15151A |
| 15191ASUB1 | 15152A |
| 15192A | 15151AA |
| 15192ASUB1 | 15152AA |
| 15236A | 15236A |
| 15237ASUB1 | 15236B |
| 15237A | 15237A |
| 15249A | 15249A |
| 15250A | 15249AA |
| 15300A | 15126AA |
| 15321A | 15119AA |

# MABPAB EQUIPMENT

| EQUIP. CODE NO. | NAME | MODEL | QUANTITY |
|---|---|---|---|
| E 135-01 | Bending MACHINE (HAND) | 416 | 1 |
| " 02 | LARGE BAND SAWS | | 2 |
| " 03 | ROTEX PUNCH PRESS | | 1 |
| " 04 | DRILL' (FLOOR MODEL) | 1200-118 | 1 |
| " 05 | GRINDER FLOOR MODEL, (2WHEEL ELECT) | | 1 |
| " 06 | PRESS BRAKE (CHICAGO STEEL CO.) | 80823 | 1 |
| " 07 | POWER SQUARING MACHINE | 002741 | 1 |
| " 08 | PRESS BRAKE | 4560G | 1 |
| " 09 | SMALL METAL SHEAR | 241-C | 1 |
| " 10 | SMALL DRILL PRESS | | 1 |
| " 11 | GRINDER 1WHEEL,(FLOOR MODEL) | WF6566 | 1 |
| " 12 | PUNCH PRESS | P41P | 1 |
| " 13 | SANDER (BELT) FLOOR MOD. | | 1 |
| " 15 | BENDING MACHINE (HAND) | BB-316 | 1 |
| " 16 | DIMPLING MACHINE | AT256SS | 1 |
| 17 | PORTABLE ELEVATOR | 1518-R5 | 1 |
| 18 | AIR HOIST 1TON | S2T18-20S | 1 |
| 19 | AIR HOIST 1 TON | S2T18-20S | 1 |
| 20 | ELECTRONIC PROG | SQ200 | 1 |
| 21 | METAL FORMER | 381D | 1 |
| 22 | METAL SHEAR (HAND) | 107-12-78 | 1 |
| 23 | SHRINKING/STRETCHING MACHINE | 8028 | 1 |
| 24 | ARBOR (HAND) | 0685 | 1 |

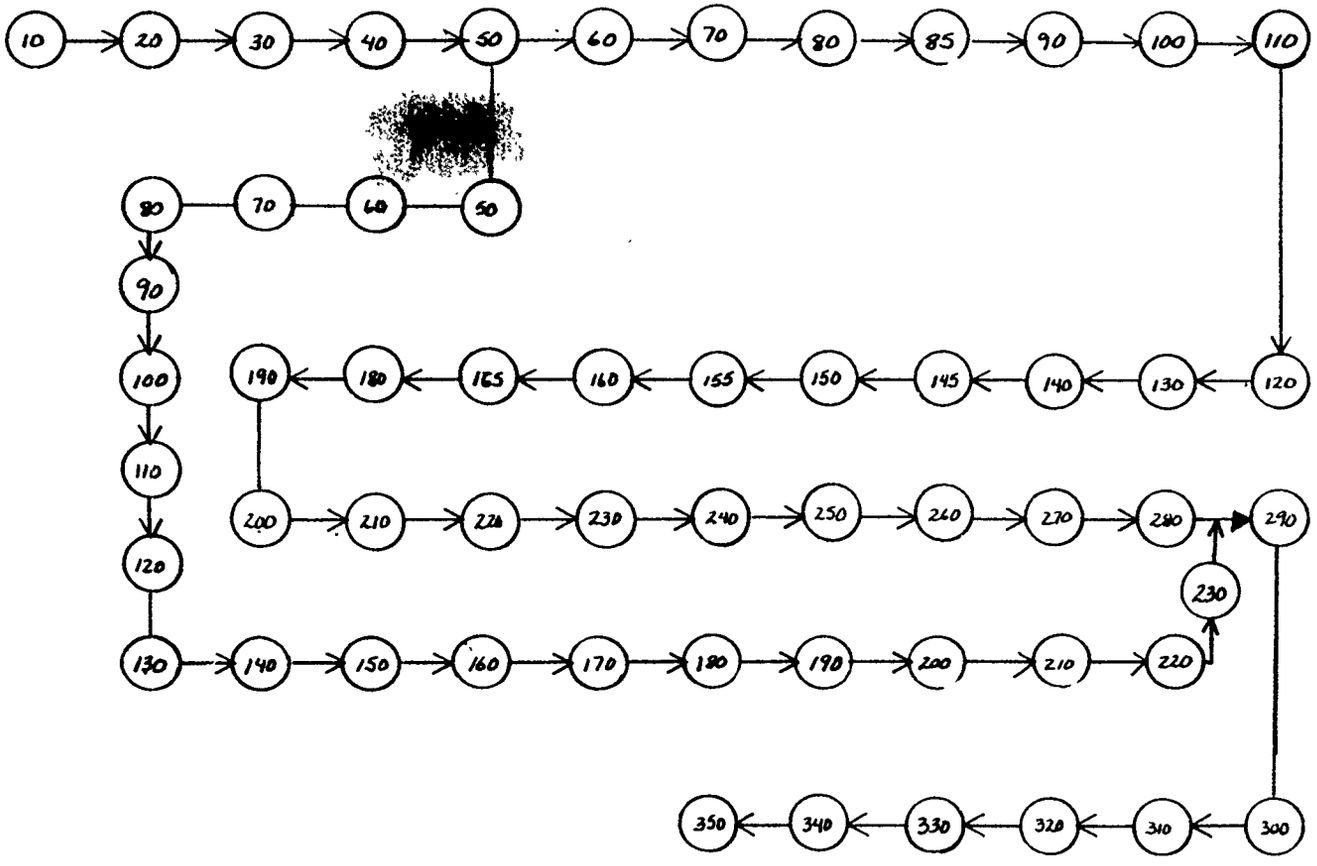
10
20
30
40
50
60
70
80
85
90
100
110
80
70
60
50
90
100
190
180
165
160
155
150
145
140
130
120
110
200
210
220
230
240
250
260
270
280
290
120
230
130
140
150
160
170
180
190
200
210
220
350
340
330
320
310
300

MABPABEQ.PP
REQ. MLW OC

# EQUIPMENT PROFILE
TINKER, AFB OKLAHOMA CITY, OK.

4/28/1989
RCC = MABPAB

| EQUIP CODE | EQUIP DESCR | QUANT AVAIL S1 | S2 | S3 | PREV MAINT FRQ | S | TIME | UNSCHED TBF | MTTR | % NOT | ENVELOPE ALT MIN | MAX | EQUIP |
|---|---|---|---|---|---|---|---|---|---|---|---|---|---|
| E135-01 | BENDMACH | 1 | | | 90 | 1 | 0.20 | | | 43 | | | |
| E135-02 | BAND SAW | 1 | | | 120 | 1 | 0.50 | | | 43 | | | |
| E135-02 | BAND SAW | | | | [illegible] | 1 | 0.50 | | | 43 | | | |
| E135-03 | PUNCHPRES | 1 | | | [illegible] | 1 | 1.50 | | | 43 | | | |
| E135-03 | PUNCHPRES | | | | 0 | 1 | 0.50 | | | 43 | | | |
| E135-04 | DRILL/FM | 1 | | | 120 | 1 | 0.50 | | | 43 | | | |
| E135-05 | GRINDER/F | 1 | | | 180 | 1 | 0.50 | | | 43 | | | |
| E135-05 | GRINDER/F | | | | 90 | 1 | 0.50 | | | 43 | | | |
| E135-06 | PRESSBRAK | 1 | | | 180 | 1 | 0.50 | | | 43 | | | |
| E135-06 | PRESSBRAK | | | | 90 | 1 | 0.50 | | | 43 | | | |
| E135-07 | POWER SQ | 1 | | | 60 | 1 | 0.30 | | | 43 | | | |
| E135-07 | POWER SQ | | | | 360 | 1 | 0.50 | | | 43 | | | |
| E135-07 | POWER SQ | | | | 600 | 1 | 1.00 | | | 43 | | | |
| E135-07 | POWER SQ | | | | 180 | 1 | 0.50 | | | 43 | | | |
| E135-08 | PRESSBRAK | 1 | | | 120 | 1 | 1.00 | | | 43 | | | |
| E135-09 | METALSHEA | 1 | | | 90 | 1 | 0.20 | | | 43 | | | |
| E135-10 | SMDRILPRE | 1 | | | 120 | 1 | 0.50 | | | 43 | | | |
| E135-12 | PUNCHPRES | 1 | | | 120 | 1 | 0.50 | | | 43 | | | |
| E135-12 | PUNCHPRES | | | | 90 | 1 | 0.20 | | | 43 | | | |
| E135-13 | SANDER/FM | 1 | | | 180 | 1 | 1.00 | | | 43 | | | |
| E135-15 | BENDMACH | 1 | | | 90 | 1 | 0.20 | | | 43 | | | |
| E135-16 | DIMPMACH | 1 | | | 365 | 1 | 1.00 | | | 43 | | | |
| E135-16 | DIMPMACH | | | | 180 | 1 | 1.00 | | | 43 | | | |
| E135-17 | PORTELEVA | 1 | | | 30 | 1 | 0.50 | | | 43 | | | |
| E135-17 | PORTELEVA | | | | 90 | 1 | 1.00 | | | 43 | | | |
| E135-17 | PORTELEVA | | | | 180 | 1 | 1.50 | | | 43 | | | |
| E135-18 | AIRHOIST | 1 | | | 1 | 1 | 0.10 | | | 43 | | | |
| E135-19 | AIRHOIST | 1 | | | 1 | 1 | 0.10 | | | 43 | | | |
| E135-20 | ELEC PROG | 1 | | | 365 | 1 | 1.00 | | | 43 | | | |
| E135-21 | METAL FOR | 1 | | | 90 | 1 | 0.20 | | | 43 | | | |
| E135-22 | METALSHEA | 1 | | | 90 | 1 | 0.20 | | | 43 | | | |
| E135-23 | SHRINKMAC | 1 | | | 90 | 1 | 0.20 | | | 43 | | | |
| E135-24 | ARBOR | 1 | | | 90 | 1 | 0.20 | | | 43 | | | |
| F335-01 | FILLETFLA | 1 | | | 365 | 1 | 32.00 | | | | | | |
| F335-02 | RUDDER | 1 | | | 365 | 1 | 32.00 | | | | | | |
| FE3A-01 | INBD FLAP | 1 | | | 365 | 1 | 32.00 | | | | | | |
| FE3A-02 | RL/H ELEV | 1 | | | 365 | 1 | 32.00 | | | | | | |
| F135-01 | RL/H ELEV | 1 | | | 365 | 1 | 32.00 | | | | | | |
| F335-03 | INBD AILE | 3 | | | 365 | 1 | 32.00 | | | | | | |
| F335-04 | OTBDMNFLA | 1 | | | 365 | 1 | 32.00 | | | | | | |

| | | | | | | |
|---|---|---|---|---|---|---|
| F335-05 | [illegible]DSPOIL | 1 | 365 | 1 | 32.00 | |
| F335-07 | [illegible] AILE | 3 | 365 | 1 | 32.00 | |
| F335-08 | OT MLG | 4 | 365 | 1 | 32.00 | |
| F335-09 | INBD MLG | 4 | 365 | 1 | 32.00 | |
| F135-03 | HOGNOSE | 1 | 365 | 1 | 32.00 | |
| F135-04 | OTBDENGST | 1 | 365 | 1 | 32.00 | |
| F135-05 | INBDENGST | 1 | 365 | 1 | 32.00 | |
| F135-06 | BOT/PANEL | 1 | 365 | 1 | 32.00 | |
| F135-07 | TAIL CONE | 1 | 365 | 1 | 32.00 | |
| F135-08 | KNEE FAIR | 1 | 365 | 1 | 32.00 | |
| F135-09 | BOMPODFAI | 1 | 365 | 1 | 32.00 | |
| F135-10 | N/WFAIRIN | 1 | 365 | 1 | 32.00 | |
| F135-11 | N/WFAIRIN | 1 | [illegible] | 1 | 32.00 | |
| F135-12 | N/WFAIRIN | 1 | [illegible] | 1 | 32.00 | |
| F135-18 | BOMTA/CON | 3 | [illegible] | 1 | 32.00 | |
| FE3A-03 | RHSIDECOW | 1 | 365 | 1 | 32.00 | |
| FE3A-04 | LHSIDECOW | 1 | 365 | 1 | 32.00 | |
| F135-13 | RHSIDECOW | 2 | 365 | 1 | 56.00 | |
| F135-14 | LHSIDECOW | 2 | 365 | 1 | 56.00 | |
| F135-15 | RHSIDECOW | 1 | 365 | 1 | 32.00 | |
| F135-16 | LHSIDECOW | 1 | 365 | 1 | 32.00 | |
| FE3A-05 | NOSE COWL | 1 | 365 | 1 | 32.00 | |
| FE3A-06 | NOSE COWL | 1 | 365 | 1 | 32.00 | |
| F135-17 | NOSE COWL | 1 | 365 | 1 | 32.00 | |
| 25 | BENCH | 10 | | | | |
| 113 | BENCH | 16 | | | | |
| 119 | BENCH | 4 | | | | |
| 126 | BENCH | 4 | | | | |
| 136 | BENCH | 4 | | | | |
| 140 | BENCH | 5 | | | | |
| 150 | BENCH | 16 | | | | |
| 175 | BENCH | 3 | | | | |
| 178 | BENCH | 5 | | | | |
| 188153 | BENCH | 12 | | | | |
| 188154 | BENCH | 6 | | | | |
| 236 | BENCH | 4 | | | | |
| 237 | BENCH | 1 | | | | |
| 249 | BENCH | 5 | | | | |

MABPABDA.PP DISASSEMBLY/ASSEMBLY PROFILE 4/28/1989
REQ. MLW OC TURNER, AFB OKLAHOMA CITY, OK. RCC = MABPAB

| * * * TOP ASSEMBLY * * * * | | | REM | INS | * * * SUBASSEMBLY * * * * | | | S |
|---|---|---|---|---|---|---|---|---|
| ITEM NUMBER | WCD | WDATE | OPN | OPN | ITEM NUMBER | WCD | WDATE | I |
| 15188A | 15153A | 88055 | 20 | 310 | 15188ASUB1 | 15154A | 88055 | N |
| 15189A | 15153AA | [redacted] | 20 | 310 | 15189ASUB1 | 15154AA | 88055 | N |
| 15191A | 15151A | [redacted] | 20 | 310 | 15191ASUB1 | 15152A | 88055 | N |
| 15192A | 15151AA | [redacted] | 20 | 310 | 15192ASUB1 | 15152AA | 88055 | N |
| 15236A | 15236A | [redacted] | 50 | 290 | 15237ASUB1 | 15236B | 88069 | N |

"SEE WCD / FLOW PROCESS

CHART DOCUMENTATION BOOK

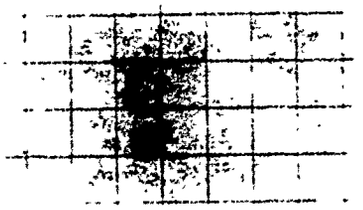

# Power Plant

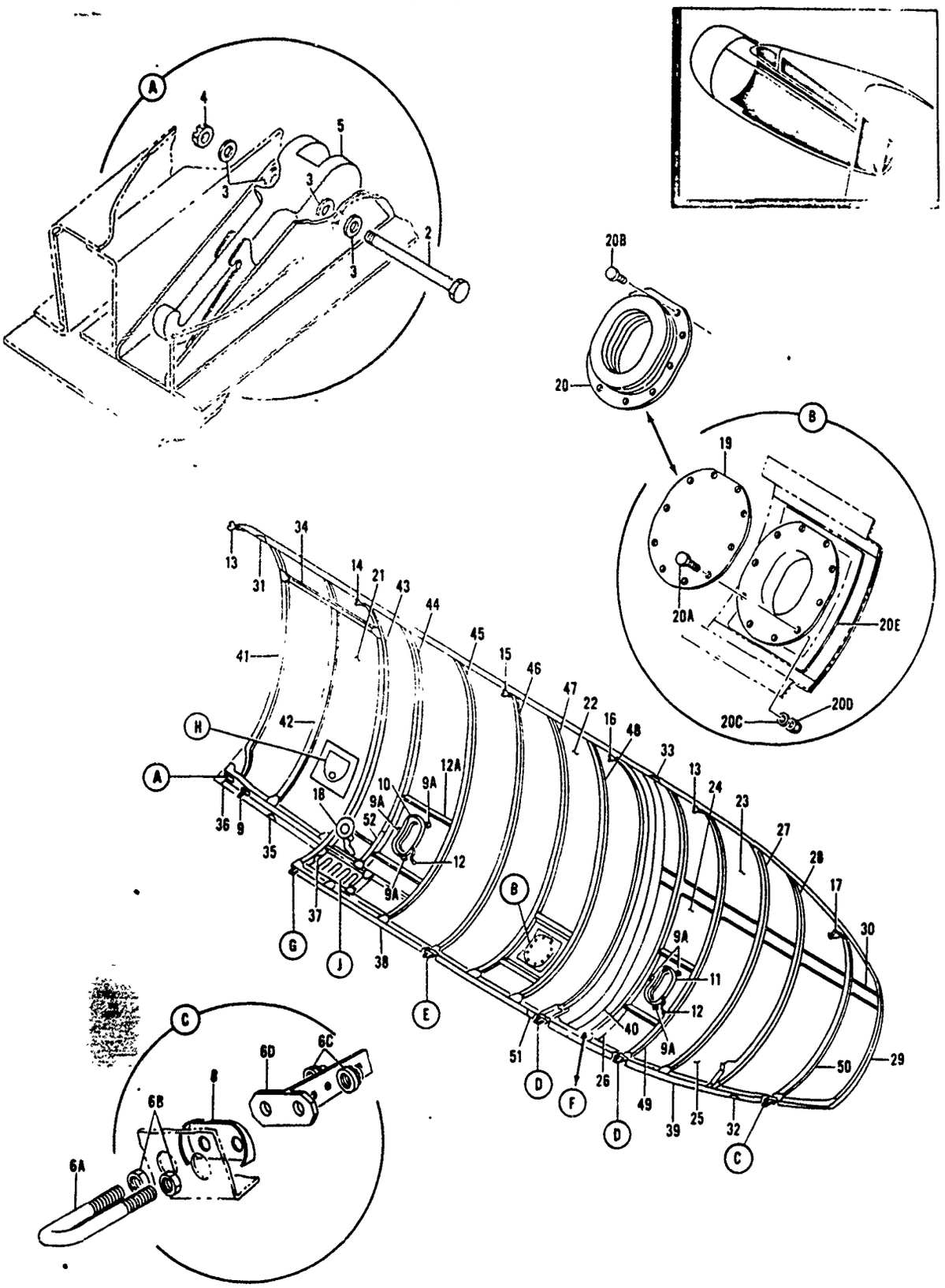


Figure 1102. Engine Nacelle Right-Hand Side Cowl Panel Assembly (Sheet 1 of 2)

# FLOW PROCESS CHART

MABPAB

SUBJECT SIDE COWL PANEL - RH DATE 4/4/89

PCN: 15113A WCD: 15113A WCDDATE: 88054

CHART BEGINS OPERATION 10 REC & UNCRATE 1 of 3

CHART ENDS " 940 CONDITION & TAG PREPARED BY: R BOLANOS

| | SYMBOLS | DESCRIPTION |
|---|---|---|
| 10 | ● ◇ D □ ▽ | RECEIVE & UNCRATE 2122 MABPCD |
| | ○ ◇ ◗ □ ▽ | DELAY |
| | ○ ◆ D □ ▽ | MOVE TO WASH |
| 20 | ● ◇ D □ ▽ | WASH MABPCA |
| 30 | ● ◇ D □ ▽ | STRIP |
| 40 | ● ◇ D □ ▽ | BLAST |
| | ○ ◆ ◡ □ ▽ | DELAY<br>MOVE TO SHEET METAL 95 MABPAB |
| | ○ ◇ ◗ □ ▽ | DELAY |
| 50 | ○ ◇ D ■ ▽ | VISUAL INSPECT |
| | ○ ◇ ◗ □ ▽ | DELAY |
| 65 | ● ◇ D □ ▽ | TEARDOWN DISASS |
| 70 | ● ◇ D □ ▽ | REMOVE CORROSION |
| | ○ ◆ D □ ▽ | MOVE TO WELDING 3001 MATP IW |
| | ○ ◇ ◗ □ ▽ | DELAY |
| 75 | ● ◇ D □ ▽ | WELD |
| | ○ ◆ D □ ▽ | MOVE TO SHEET METAL 95 MABPAB |
| | ○ ◇ ◗ □ ▽ | DELAY |
| 80 | ● ◇ D □ ▽ | ASSEMBLE DOUBLER & PLATE |
| 100 | ● ◇ D □ ▽ | REPAIR LONGERON 46 50% of RIVETS |
| [illegible] | ● ◇ D □ ▽ | " " 84 50% of RIVETS |
| [illegible] | ● ◇ D □ ▽ | " " 47 50% of RIVETS |
| [illegible] | ● ◇ D □ ▽ | ASSEMBLE 75 to 99 |
| 140 | ● ◇ D □ ▽ | REPAIR LONGERON 99 |
| 150 | ● ◇ D □ ▽ | ASSEMBLE 73 to 91 |
| 160 | ● ◇ D □ ▽ | REPAIR LONGERON 91 |
| 170 | ● ◇ D □ ▽ | " " 62 |
| 180 | ● ◇ D □ ▽ | " " FRAME #1 |
| 190 | ● ◇ D □ ▽ | " " #2 |
| 200 | ● ◇ D □ ▽ | " " #3 |

STEP 90 DELETED ON WCD/BBASS

| | SYMBOLS | DESCRIPTION |
|---|---|---|
| 210 | ● ◇ D □ ▽ | REP. FRAME #4 |
| 220 | ● ◇ D □ ▽ | " " #5 |
| 230 | ● ◇ D □ ▽ | " " #6 |
| 240 | ● ◇ D □ ▽ | " " #7 |
| 250 | ● ◇ D □ ▽ | " " #8 |
| 260 | ● ◇ D □ ▽ | " " #9 |
| 270 | ● ◇ D □ ▽ | " " #10 |
| 280 | ● ◇ D □ ▽ | " " #11 |
| 290 | ● ◇ D □ ▽ | " " #12 |
| 300 | ● ◇ D □ ▽ | ASSEMBLE 60-494 to 63 |
| 310 | ● ◇ D □ ▽ | REP FRAME #13 |
| 320 | ● ◇ D □ ▽ | #14 |
| 330 | ● ◇ D □ ▽ | #15 |
| 340 | ● ◇ D □ ▽ | REP. ANGLES |
| 350 | ● ◇ D □ ▽ | BELLOWS SEALS |
| 360 | ● ◇ D □ ▽ | " " |
| 370 | ● ◇ D □ ▽ | DRILL 1, 2, 3, 4, 5, |
| 380 | ● ◇ D □ ▽ | REP. SKINS 1, 2, 3, 4, 5 |
| 390 | ● ◇ D □ ▽ | PLACE COOLING ON FIXTU |
| 400 | ● ◇ D □ ▽ | CLEAN & APPLY CORROSION PROTECTIVE |
| 410 | ● ◇ D □ ▽ | REP. LONGERON 81 |
| 420 | ● ◇ D □ ▽ | REPAIR & ASSEMBLE #11 FR |
| 430 | ● ◇ D □ ▽ | POSITION #12 FRAME |
| 440 | ● ◇ D □ ▽ | " #13 " ASSY. |
| 450 | ● ◇ D □ ▽ | " #14 " |
| 455 | ● ◇ D □ ▽ | " #15 " |
| 460 | ● ◇ D □ ▽ | REMOVE/REPLACE 15 |
| 470 | ● ◇ D □ ▽ | Position #16 |
| 480 | ● ◇ D □ ▽ | " #17 |

FLOW PROCESS CHART — MABPAB

SUBJECT: SIDE COWL PANEL RH — DATE: 4/4/89

PCN: 15113A WCD: 15113A WCDDATE: 88054

CHART BEGINS — 2 of 3

CHART ENDS — PREPARED BY: R BOLANOS

| SYMBOLS | DESCRIPTION |
|---|---|
| 490 | POSITION # 18 |
| 500 | REMOVE & REPLACE #19 |
| 505 | POSITION #19 |
| 510 | POSITION # 20 |
| 515 | " " 21 |
| 520 | REM & REPLACE 21 & FRAME 39 ASSY |
| 525 | POSITION #22 |
| 530 | #23 |
| 540 | # 24 |
| 545 | REMOVE/REPLACE #24 |
| 550 | # 25 |
| 560 | REPLACE # 1 SKIN |
| 565 | " #2 SKIN |
| 570 | " #3 SKIN |
| 575 | " #4 SKIN |
| 580 | " #5 SKIN |
| 585 | SPLICE #26 |
| 590 | BELLOWS |
| 595 | DOUBLER (REP/RPLC) |
| 600 | LOUVER |
| 6[illegible] | STARTER CARTRIDGE DOOR (REPAIR/REPLACE) |
| 6[illegible] | REPLACE T ANGLES |
| 615 | REMOVE COWL FROM FIXTURE |
| 620 | FINAL ASSEMBLY (NO TIME USE) |
| 625 | INSTALL LONGERON #1 100% of RIVETS |
| 630 | " " 57 |
| 635 | " " 48 |
| 640 | " " 34 |
| 645 | " " 47 |

| SYMBOLS | DESCRIPTION |
|---|---|
| 650 | FINAL INSTALL #28 DOUBLER 100% of RIVETS |
| 655 | " " 99 LONGERON |
| 660 | FIN. INSTALL #88 DOUBLER |
| 665 | " 91 |
| 670 | " #62 LONGERON |
| 675 | " #2 FRAME |
| 680 | " #3 FRAME |
| 685 | " #4 FRAME |
| 690 | " #5 FRAME |
| 700 | " #6 FRAME |
| 705 | " #7 FRAME |
| 710 | " #8 FRAME |
| 715 | " #9 FRAME |
| 720 | " #10 " |
| 725 | " #11 " |
| 730 | " #12 " |
| 735 | " #13 " |
| 740 | " #14 " |
| 745 | " #15 " |
| 750 | REP/RPLC FIREDOOR PAN 53 |
| 755 | INL/ALL FIRE EXTINGUISHER DOOR |
| 760 | R/R FIREDOOR PAN 52 |
| 765 | INSTALL FIRE EXTINGUISHER DOOR |
| 767 | INSPECT |
| 770 | R/R SPRING CLIPS |
| 775 | INSTALL VENT ASSY |
| 780 | INSTALL CAE SPEED DRIVER |
| 785 | INSTALL STARTER CARTRIGER |
| 790 | INSTALL STAINLESS STEEL PLATES |

# FLOW PROCESS CHART

SUBJECT SIDE COWL PANEL RH DATE 4/4/8

PCN: 15113A WCD: 15113A WCDDATE: 88055

CHART BEGINS 3 of

CHART ENDS PREPARED BY: R. BOLANOS

| SYMBOLS | DESCRIPTION | SYMBOLS | DESCRIPTION |
|---|---|---|---|
| 795 | INSTALL CAP COVER | 940 | COMPLETE CONDITI TAG |
| 800 | INSTALL DRAIN CAP | | |
| 805 | INSTALL Jumpers | | |
| 810 | " OIL BREATHER | | |
| 815 | " PLATE 56 | | |
| 820 | " " 72 | | |
| 825 | " SKIN #1 | | |
| 830 | " " 2 | | |
| 835 | " " 3 | | |
| 840 | " " 4 | | |
| 845 | " " 5 | | |
| 850 | " LACHES | | |
| 855 | " HINGES #1 HOOK | | |
| 860 | " " #2 " | | |
| 865 | " " #3 " | | |
| 870 | " " #4 " | | |
| 875 | " " #5 " | | |
| 880 | " " SPEAR | | |
| 890 | DRILL ALL DRAIN HOLE | | |
| 895 | INSTALL CLIPS AS REQ | | |
| [illegible] | INSPECT COWLING | | |
| 905 | SHAVE ALL HIGH RIVETS | | |
| 910 | INSPECT COWLING ALIGNMENT. ON FIXTURE | | |
| 915 | TRIM SKIN | | |
| 920 | INSTALL ALLIGNMENT PLATES & PINS | | |
| | MOVE TO PAINT 2280 MABPCB | | |
| 930 | FINAL WASH & TREAT FOR CORROSION | | |
| 935 | PAINT INTERIOR/EXT. INSTALL STENCILS | | |
| | MOVE TO SHEET METAL 95 MABPOB | | |

| FIGURE & INDEX NO. | PART NUMBER | 1 2 3 4 5 6 7 DESCRIPTION | UNITS PER ASSY | CODE |
|---|---|---|---|---|
| 1101- | 5-85637 —15025A | PANEL ASSY, LEFT HAND SIDE COWL, ENGINE NACELLE (FOR. . . NHA SEE FIG. 1100) | REF | A |
| | 35-32371-1 | PANEL ASSY, LEFT HAND SIDE COWL, ENGINE NACELLE (FOR. . . NHA SEE FIG. 1100) | REF | A |
| 1 | 99836 | . PIN, COWL FASTNR (61864) (BACP18A5) . . . . . | 1 | A |
| 2 | 98265-2-.170 | . STUD, COWL FASTNR (61864) (BACS21B5FH17). . . . . | 1 | A |
| 3 | 99947P.130 | . SPRING, COWL FASTNR, FLTG (61864) (BACS20A5P) . . . . . | 1 | A |
| 4 | MS20253-2-475 | . PIN . . . . . | 1 | A |
| 5 | 5-85637-114 | . HINGE, CONTINUOUS HALF, LEFT HAND SIDE COWL, ENGINE . . NACELLE (ALTERED FROM MS20257H5-550) | 1 | A |
| 6 | 5-85637-115 | . HINGE, CONTINUOUS HALF, LEFT HAND SIDE COWL, ENGINE . . NACELLE (ALTERED FROM MS20257H5-600) | 1 | A |
| 7 | 5-85637-112 | . DOOR ASSY, PANEL, LEFT HAND SIDE COWL, ENGINE NACELLE . | 1 | A |
| 8 | 90-7988 | . SEAL, MOLDED RUBBER, ENGINE OIL TANK OIL SCUPPER. . . . (SPEC MIL-R-6855 CLASS I GRADE 40, 40 DUROMETER) | 1 | A |
| 8A | 5-85637-82 | . DUCT ASSY, PANEL, LEFT HAND SIDE COWL, ENGINE NACELLE . | 1 | A |
| 9 | NAS1103-23W | . BOLT (FOR REPLACEMENT ORDER NAS1103-23) . . . . . | 1 | A |
| 10 | NAS1103-24W | . BOLT (FOR REPLACEMENT ORDER NAS1103-24) . . . . . | 1 | A |
| 11 | NAS1103-22W | . BOLT (FOR REPLACEMENT ORDER NAS1103-22) . . . . . | 3 | A |
| 12 | NAS1103-21W | . BOLT (FOR REPLACEMENT ORDER NAS1103-21) . . . . . | 1 | A |
| 13 | AN960D10L | . WASHER. . . . . | 24 | A |
| 14 | AN320-3 | . NUT . . . . . | 6 | A |
| 15 | H28-3 | . LATCH ASSY, TOGGLE HOOK, ENGINE NACELLE COWL PANEL. . . (83014) (ALTERNATE 24L1-3 (71286)) (BOEING SPEC 10-2731-4) | 1 | A |
| 16 | H28-2 | . LATCH ASSY, TOGGLE HOOK, ENGINE NACELLE COWL PANEL. . . (83014) (ALTERNATE 24L1-2 (71286)) (BOEING SPEC 10-2731-2) | 2 | A |
| 17 | H28-1 | . LATCH ASSY, TOGGLE HOOK, ENGINE NACELLE COWL PANEL. . . (83014) (ALTERNATE 24L1 (71286)) (BOEING SPEC 10-2731-1) | 2 | A |
| 18 | H40-1 | . LATCH ASSY, TOGGLE HOOK, ENGINE NACELLE COWL PANEL. . . (83014) (ALTERNATE 26L1 (71286)) (BOEING SPEC 10-2731-3) | 1 | A |
| 19 | 60-4019 | . PIN, SHEAR, ENGINE NACELLE COWL PANEL (WHEN EXHAUSTED . USE 66-4025) | 1 | A |
| 19 | 66-4025 | . PIN, SHEAR, ENGINE NACELLE COWL PANEL . . . . . (ATTACHING PARTS) | 1 | A |
| | NAS679A4W | . NUT . . . . . | 1 | A |
| 20 | 3-74649 | . PIN, SHEAR, COWL. . . . . | 2 | A |
| 20A | 3-74649 | . PIN, SHEAR, COWL. . . . . | 2 | A |
| 20B | 66-18062-1 | . PIN, ALIGNING, ENGINE NACELLE COWL PANEL. . . . . (ATTACHING PARTS) | 2 | A |
| | AN960D416 | . WASHER. . . . . | 4 | A |
| | NAS679A4W | . NUT . . . . . | 4 | A |
| 21 | 5-96762 | . HOOK, HINGE, NACELLE COWLING. . . . . | 2 | A |
| 22 | 5-96766 | . HOOK, HINGE, NACELLE COWLING. . . . . | 1 | A |
| 23 | 5-96766-1 | . HOOK, HINGE, NACELLE COWLING. . . . . | 1 | A |
| 24 | 5-96766-2 | . HOOK, HINGE, NACELLE COWLING. . . . . (ATTACHING PARTS) | 1 | A |
| | AN5-10A | . BOLT (ALTERNATE BACB30NE5-9). . . . . | 4 | A |
| | NAS1105-9W | . BOLT (ALTERNATE NAS1105-9). . . . . | 1 | A |
| | AN960-516L | . WASHER. . . . . | 10 | A |
| | MS21042L5 | . NUT (REPLACES NAS679A5) . . . . . | 5 | A |
| | AN3-[illegible] | . BOLT (FOR REPLACEMENT ORDER BACB30NF3-8). . . . . | 5 | A |
| | AN960-[illegible]L | . WASHER. . . . . | 5 | A |
| | NAS679A3W | . NUT . . . . . | 5 | A |
| 24A | AN7510F2 | . NAMEPLATE . . . . . | 1 | A |
| 25 | 5-96719 | . HINGE, SPEAR, ENGINE NACELLE COWL PANEL (FOR I/W INFO . SEE 5-96719-2) | 1 | A |
| 25 | 5-96719-2 | . HINGE SPEAR, ENGINE NACELLE COWL PANEL. . . . . (ATTACHING PARTS) | 1 | A |
| | AN4-10A | . BOLT (ALTERNATE BACB30NE4-9). . . . . | 1 | A |
| | AN960-416 | . WASHER. . . . . | 1 | A |
| | AN960-416L | . WASHER. . . . . | 1 | A |
| | MS21042-4 | . NUT (REPLACES AN363-428). . . . . | 1 | A |
| | AN3-7A | . BOLT (FOR REPLACEMENT ORDER BACB30NF3-8). . . . . | 1 | A |
| | AN960-10 | . WASHER. . . . . | 1 | A |
| | AN960-10L | . WASHER. . . . . | 1 | A |
| | NAS679A3W | . NUT . . . . . | 1 | A |

# Power Plant

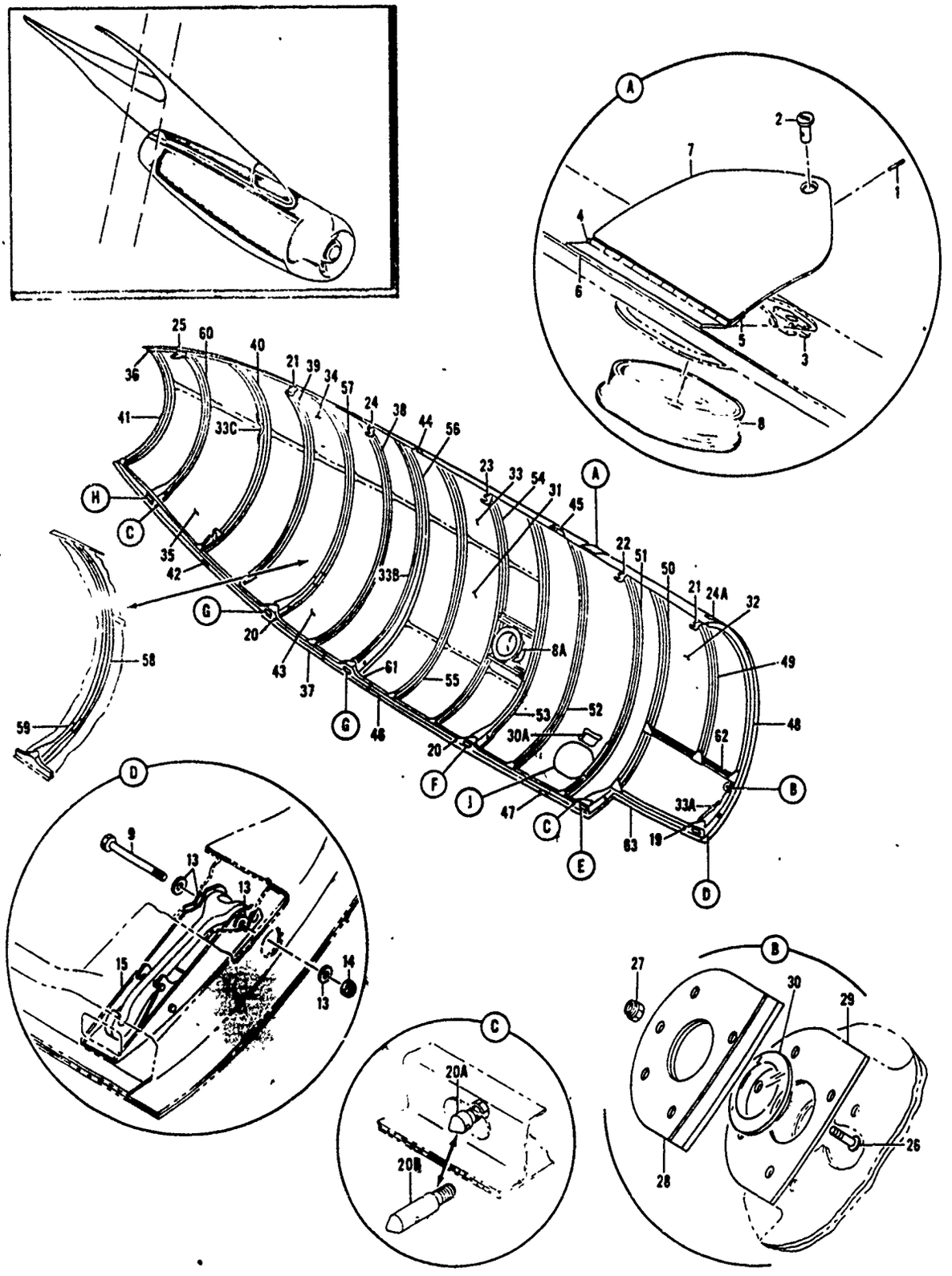


*Figure 1101. Engine Nacelle Left Hand Side Cowl Panel Assembly (Sheet 1 of 2)*

# Power Plant

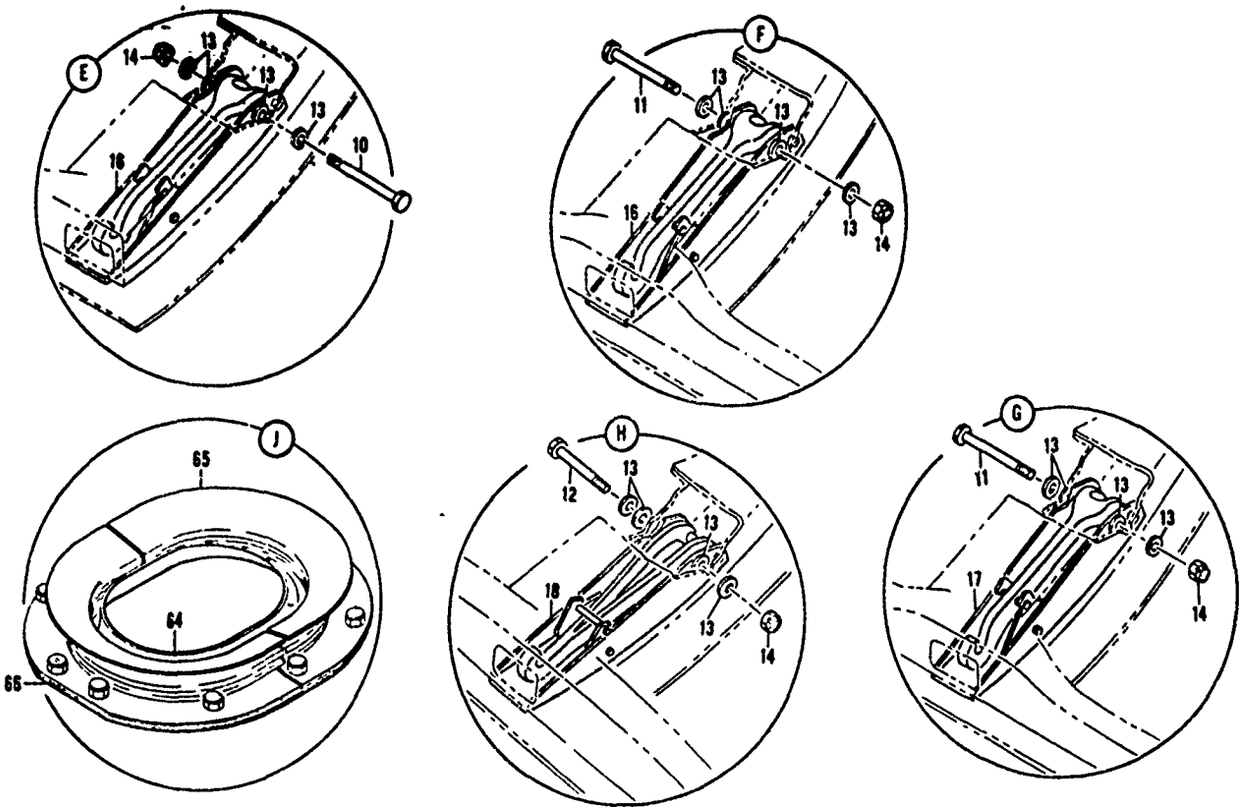


*Figure 1101. Engine Nacelle Left Hand Side Cowl Panel Assembly (Sheet 2 of 2)*

| FIGURE & INDEX NO. | PART NUMBER | DESCRIPTION<br>1 2 3 4 5 6 7 | UNITS PER ASSY | USE ON CODE |
|---|---|---|---|---|
| 1101- | | | | |
| 26 | NAS514P1032-8 | . SCREW . . . . . | 5 | A |
| 27 | NAS679A3W | . NUT . . . . . | 5 | A |
| 28 | 5-85637-126 | . RETAINER ASSY, PANEL, LEFT HAND SIDE COWL, ENGINE NACELLE . . . | 1 | A |
| 29 | 5-85637-128 | . RING, FILLER, LEFT HAND SIDE COWL PANEL, ENGINE NACELLE . . . . | 1 | A |
| 30 | 66-3355 | . WINDOW, SIGHTING, AIR BOTTLE GAGE, ENGINE NACELLE . . . | 1 | A |
| 30A | BACM10L1DWY | . METAL-CAL, LEGEND . . . . . | 1 | B |
| 31 | 5-85637-6 | . SKIN, PATCH, LEFT HAND SIDE COWL PANEL, ENGINE. NACELLE . . . . | 1 | A |
| 32 | 5-85637-1 | . SKIN, FORWARD, LEFT HAND SIDE COWL PANEL, ENGINE. NACELLE . . . | 1 | A |
| 33 | 5-[illegible]-2 | . SKIN, MIDDLE, LEFT HAND SIDE COWL PANEL, ENGINE NACELLE . . . . | 1 | A |
| 33A | 5-[illegible]-120 | . FRAME ASSY, PANEL, LEFT HAND SIDE COWL, ENGINE. NACELLE . . . . | 1 | A |
| 33B | 5-[illegible]-91 | . FRAME ASSY, PANEL, LEFT HAND SIDE COWL, ENGINE. NACELLE . . . . | 1 | A |
| 33C | 60-4921 | . ANGLE, REINFORCING, ENGINE NACELLE COWLING. . . . . | 1 | A |
| | 5-85637-68 | . FRAME AND SKIN ASSY, PANEL LH SIDE COWL ENGINE. NACELLE . . . . | 1 | A |
| | 5-85637-136 | . FRAME AND SKIN ASSY, PANEL, LEFT HAND SIDE COWL, ENGINE NACELLE . . . . | 1 | A |
| 34 | 5-85637-4 | . . SKIN, UPPER AFT, LEFT HAND SIDE COWL PANEL, ENGINE. NACELLE . | 1 | A |
| 35 | 5-85637-5 | . . SKIN, AFT, LEFT HAND SIDE COWL PANEL, ENGINE. NACELLE . . . . | 1 | A |

| FIGURE & INDEX NO. | PART NUMBER | DESCRIPTION 1 2 3 5 6 7 | UNITS PER ASSY | USE ON CODE |
|---|---|---|---|---|
| 1101- | | | | |
| 36 | 5-85637-8 | . . LONGERON, UPPER AFT, LEFT HAND SIDE COWL PANEL, . . . ENGINE NACELLE | 1 | A |
| 37 | 5-85637-10 | . . LONGERON, LOWER AFT, LEFT HAND SIDE COWL PANEL, . . . ENGINE NACELLE | 1 | A |
| 38 | 5-85637-20 | . . FRAME, PANEL STATION 180.00, LEFT HAND SIDE COWL, . . ENGINE NACELLE | 1 | A |
| 39 | 5-85637-22 | . . FRAME, PANEL STATION 200.00, LEFT HAND SIDE COWL, . . ENGINE NACELLE | 1 | A |
| 40 | 5-85637-23 | . . FRAME, PANEL STATION 210.00, LEFT HAND SIDE COWL, . . ENGINE NACELLE | 1 | A |
| 41 | 5-85637-25 | . . FRAME, PANEL STATION 235.00, LEFT HAND SIDE COWL, . . ENGINE NACELLE | 1 | A |
| 42 | 5-85637-37 | . . DOUBLER, PANEL, LEFT HAND SIDE COWL, ENGINE NACELLE . | 1 | A |
| 43 | 5-85637-3 | . SKIN, LOWER AFT, LEFT HAND SIDE COWL PANEL, ENGINE. . . NACELLE | 1 | A |
| | 5-85637-98 | . LONGERON ASSY, PANEL, LEFT HAND SIDE COWL, ENGINE . . . NACELLE | 1 | A |
| 44 | 5-85637-7 | . . LONGERON, UPPER FORWARD, LEFT HAND SIDE COWL PANEL, . ENGINE NACELLE | 1 | A |
| 45 | 5-85637-27 | . . DOUBLER, PANEL, LEFT HAND SIDE COWL, ENGINE NACELLE . | 1 | A |
| | 5-85637-100 | . LONGERON ASSY, PANEL, LEFT HAND SIDE COWL, ENGINE . . . NACELLE | 1 | A |
| 46 | 5-85637-9 | . . LONGERON, LOWER FORWARD, LEFT HAND SIDE COWL PANEL. . ENGINE NACELLE | 1 | A |
| 47 | 5-85637-33 | . . DOUBLER, PANEL, LEFT HAND SIDE COWL, ENGINE NACELLE . | 1 | A |
| | 5-85637-59 | . FRAME ASSY, PANEL, LEFT HAND SIDE COWL, ENGINE. . . . . NACELLE | 1 | A |
| 48 | 5-85637-11 | . . FRAME, PANEL STATION 89.50, LEFT HAND SIDE COWL,. . . ENGINE NACELLE | 1 | A |
| 49 | 5-85637-12 | . FRAME, PANEL STATION 100.43, LEFT HAND SIDE COWL, . . . ENGINE NACELLE | 1 | A |
| | 5-85637-60 | . FRAME ASSY, PANEL, LEFT HAND SIDE COWL, ENGINE. . . . . NACELLE | 1 | A |
| 50 | 5-85637-13 | . . FRAME, PANEL STATION 112.50, LEFT HAND SIDE COWL. . . ENGINE NACELLE | 1 | A |
| | 5-85637-81 | . FRAME ASSY, PANEL, LEFT HAND SIDE COWL, ENGINE. . . . . NACELLE | 1 | A |
| 51 | 5-85637-14 | . . FRAME, PANEL STATION 120.00, LEFT HAND SIDE COWL. . . ENGINE NACELLE | 1 | A |
| 52 | 5-85637-15 | . FRAME, PANEL STATION 131.50, LEFT HAND SIDE COWL. . . . ENGINE NACELLE | 1 | A |
| | 5-85637-61 | . FRAME ASSY, PANEL, LEFT HAND SIDE COWL, ENGINE. . . . . NACELLE | 1 | A |
| 53 | 5-85637-16 | . . FRAME, PANEL STATION 142.80, LEFT HAND SIDE COWL, . . ENGINE NACELLE | 1 | A |
| 54 | 5-85637-17 | . FRAME, PANEL STATION 152.75, LEFT HAND SIDE COWL, . . . ENGINE NACELLE | 1 | A |
| 55 | 5-85637-18 | . FRAME, PANEL STATION 161.50, LEFT HAND SIDE COWL, . . . ENGINE NACELLE | 1 | A |
| | 5-85637-62 | . FRAME ASSY, PANEL, LEFT HAND SIDE COWL, ENGINE. . . . . NACELLE | 1 | A |
| 56 | 5-85637-19 | . . FRAME, PANEL STATION 171.20, LEFT HAND SIDE COWL, . . ENGINE NACELLE | 1 | A |
| | 5-85637-63 | . FRAME ASSY, PANEL, LEFT HAND SIDE COWL, ENGINE. . . . . NACELLE | 1 | A |
| 57 | 5-87637-21 | . . FRAME PANEL STATION 190.00 LEFT HAND SIDE COWL, . . . ENGINE NACELLE | 1 | A |
| 58 | 5-85637-814 | . . FRAME, PANEL STATION 190.00, LEFT HAND SIDE COWL, . . ENGINE NACELLE | 1 | A |

| FIGURE & INDEX NO. | PART NUMBER | 1 2 3 4 5 6 7 DESCRIPTION | UNITS PER ASSY | USE ON CODE |
|---|---|---|---|---|
| 1101- | | | | |
| 59 | 5-85637-815 | . . FRAME, PANEL STATION 190.00, LEFT HAND SIDE COWL, . . ENGINE NACELLE | 1 | A |
| | 5-85637-64 | . FRAME ASSY, LEFT HAND SIDE COWL, ENGINE NACELLE . . . . (WHEN EXHAUSTED USE 5-85637-137) | 1 | A |
| | 5-85637-137 | . FRAME ASSY, PANEL, LEFT HAND SIDE COWL, ENGINE. . . . . NACELLE | 1 | A |
| 60 | 5-85637-134 | . . FRAME, PANEL STATION 225.00, LEFT HAND SIDE COWL, . . ENGINE NACELLE | 1 | A |
| | 5-85637-113 | . SEGMENT ASSY, LONGERON, LEFT HAND SIDE COWL PANEL,. . . ENGINE NACELLE | 1 | A |
| 61 | 5-85637-32 | . . SEGMENT, LONGERON, LEFT HAND SIDE COWL PANEL, . . . . ENGINE NACELLE | 1 | A |
| 62 | 5-85637-89 | . LONCERON, PANEL, LEFT HAND SIDE COWL, ENGINE NACELLE. . | 1 | A |
| | 5-85637-99 | . LONGERON ASSY, PANEL, LEFT HAND SIDE COWL, ENGINE . . . NACELLE | 1 | A |
| 63 | 5-85637-88 | . . LONGERON, PANEL, LEFT HAND SIDE COWL, ENGINE. . . . . NACELLE | 1 | A |
| 64 | 90-3343-2 | . DUCT, FUEL AIR STARTER EXHAUST. . . . . (ATTACHING PARTS) | 1 | A |
| | NAS514P1032-6 | . SCREW . . . . . | 10 | A |
| | MS21042L3 | . NUT . . . . . | 10 | A |
| 65 | 1200874-10 | . SEAL ASSY, FUEL AIR STARTER EXHAUST BELLOWS (98769) . . (BAC SPEC NO. 10-2748-11) (OPTIONAL 65-32834-1) | 1 | A |
| 66 | 69-22576-1 | . SEAL, STARTER EXHAUST EXIT GASKET . . . . . | 1 | A |

A 2201 THRU 2299, 3001 THRU 3015
B 2201 THRU 2299

ALSO SEE FIGURE 1132

# FLOW PROCESS CHART

SUBJECT Left Hand Side Cowl DATE 4/4/89

PCN: 15025A WCD: 15025A WCDDATE: 88054

CHART BEGINS Operation 10

CHART ENDS operation 990 PREPARED BY: Tim Hall

| | SYMBOLS | DESCRIPTION |
|---|---|---|
| 010 | ● ◇ D □ ▽ | Receive and Uncrate 2122 MABRD |
| | ○ ◇ ▮ □ ▽ | Delay |
| | ○ ▮ D □ ▽ | Move to MABRCA 2122 MABRCA |
| | ○ ◇ ▮ □ ▽ | Delay |
| 020 | ● ◇ D □ ▽ | Wash interior + exterior |
| 030 | ● ◇ D □ ▽ | Strip all paint |
| 040 | ● ◇ D □ ▽ | Abrasive blast |
| | ○ ◇ ▮ □ ▽ | Delay |
| | ○ ▮ D □ ▽ | Move to Bldg 95 95 MABPAB |
| | ○ ◇ ▮ □ ▽ | Delay |
| 050 | ○ ◇ D ■ ▽ | Visual inspection |
| 065 070 | ● ◇ D □ ▽ | Teardown Remove & Treat Corrosion |
| 080 | ● ◇ D □ ▽ | Remove Hooks & Latches |
| 090 | ● ◇ D □ ▽ | Remove Fuel Starter Exhaust Assy |
| 100 | ● ◇ D □ ▽ | Repair or replace Frame #2 |
| 110 | ● ◇ D □ ▽ | Repair or replace Longeron |
| 120 | ● ◇ D □ ▽ | Repair or replace Frame #3 |
| 130 | ● ◇ D □ ▽ | Repair or replace Frame #4 |
| 140 | ● ◇ D □ ▽ | Repair or replace Frame #5 |
| 150 | ● ◇ D □ ▽ | Repair or replace Frame #6 |
| [illegible] | ● ◇ D □ ▽ | Repair or replace Frame #7 |
| [illegible] | ● ◇ D □ ▽ | Repair or replace Frame #8 |
| 180 | ● ◇ D □ ▽ | " " Firewall Assy |
| 190 | ● ◇ D □ ▽ | " " Fireseal |
| 200 | ● ◇ D □ ▽ | " " Frame #10 |
| 210 | ● ◇ D □ ▽ | " " Frame #11 |
| 220 | ● ◇ D □ ▽ | " " Frame #12 |
| 230 | ● ◇ D □ ▽ | " " Frame #13 |
| 240 | ● ◇ D □ ▽ | " " Frame #14 |
| 250 | ● ◇ D □ ▽ | Repair or replace Frame #15 |
| 260 | ● ◇ D □ ▽ | Replace clips as required |
| | ○ ◇ ▮ □ ▽ | Delay |
| | ○ ▮ D □ ▽ | Move to 3001 3001 MATRIW |
| | ○ ◇ ▮ □ ▽ | Delay |
| 270 | ● ◇ D □ ▽ | Weld as required |
| | ○ ◇ ▮ □ ▽ | Delay |
| | ○ ▮ D □ ▽ | Move to Bldg 95 95 MABPAB |
| | ○ ◇ ▮ □ ▽ | Delay |
| 280 | ● ◇ D □ ▽ | Repair or replace Longeron (-8) |
| 290 | ● ◇ D □ ▽ | Install Spring Clip 60-2966-4 |
| 300 | ● ◇ D □ ▽ | Repair or replace Longeron |
| 310 | ● ◇ D □ ▽ | Install Hooks |
| 320 | ● ◇ D □ ▽ | Replace seal |
| 330 | ● ◇ D □ ▽ | Replace Door Frame (-11) |
| 340 345 | ● ◇ D □ ▽ | Repair door assy. -112 Repair longeron -10 |
| 350 | ● ◇ D □ ▽ | Repair or replace Longeron (-113) |
| 360 | ● ◇ D □ ▽ | Repair or replace Longeron (-102) |
| 370 | ● ◇ D □ ▽ | Repair or replace latches |
| 380 | ● ◇ D □ ▽ | Install Pin Plates |
| 390 | ● ◇ D □ ▽ | Remove steel mounting plate (-77) |
| 400 | ● ◇ D □ ▽ | Repair or replace Duct |
| 410 | ● ◇ D □ ▽ | Replace Gasket |
| 420 | ● ◇ D □ ▽ | Replace seal bellows |
| 430 | ● ◇ D □ ▽ | Replace vent |
| 440 | ● ◇ D □ ▽ | Replace duct assy |
| 450 | ● ◇ D □ ▽ | Remove #1 Frame |
| 460 | ● ◇ D □ ▽ | Replace Longeron -99 |
| 470 | ● ◇ D □ ▽ | Drill skins out as required |

| L5025A * WORK CONTROL DOCUMENT * MISC | DATE 88054 | PAGE 1 OF 2 PAGES |
|---|---|---|

| 2.ORIG/PROD NR | 3.QUANTITY | 4.PROD SECTION/RCC | 5.DATE SCHLD | 6.DATE COMP |
|---|---|---|---|---|
| 15025A | | MBPAB | 89093 | |

| 7.PART NUMBER | 9.ITEM SERIAL NR | 8/12.TECH DATA/OPTIONAL |
|---|---|---|
| 35-32371-1 | | SOW-0C1560FL-82-174 |
| | | DRWG 5-85637 |
| 10.MODEL/DESIGN/SERIES | 11.STOCK NR | T.O. 1-1A 1 |
| 135 | 1560005205602FL | T.O. 1-1-2 |
| | | T.O. 1C-135(K)A 3-1 |
| 13.MISC | 14.NOUN/END ITEM NOUN | T.O. 1C-135(K)A 3-4 |
| | LEFT HAND SIDE COWL | |
| | LARRY MULLINAX/MABLBS/65266 | |

| 15.DIST-STATION | 16.PDN/OP NO. | 17.WORK TO BE ACCOMPLISHED | 18.MECH | 19"" | 20"OK |
|---|---|---|---|---|---|
| 2122 | 010 MBPCD | RECEIVE AND UNCRATE SIDE COWL. NOTE: OBSERVE CAUTION THAT SIDE COWL IS NOT DAMAGED DURING UNCRATING. | | / | / |
| 2122 | 020 MBPCA | WASH INTERIOR AND EXTERIOR IAW T.O. 1C-135(K)A 3-4 PARA 11-7 AND SOW 0C1560 82-174. | | / | / |
| 2122 | 030 MBPCA | STRIP ALL INTERIOR AND EXTERIOR PAINT FROM SIDE COWL IAW T.O. 1C-135(K)A-3-4. PARA 11-15 & SOW 0C1560-82-174. | | / | / |
| 2122 | 040 MBPCA | ABRASIVE BLAST SIDE COWL IAW T.O. 1C-135(K)A-3-4 WCI 9 AND T.O. 1-1-2. | | / | / |
| 95 | 050 MBPAB | ACCOMPLISH VISUAL INSPECTION IAW SOW 82-174 | | / | / |
| 95 | 065 MBPAB | TEARDOWN<br>NOTE: DEPOT OVERHAUL OF J-57 LEFT HAND SIDE COWL WILL BE DONE IN ACCORDANCE WITH INSTRUCTIONS CONTAINED IN SOW 0C1560-82-174 AND 1C-135(K)A-3-4. | | / | / |
| 95 | 070 MBPAB | REMOVE CORROSION AND APPLY CORROSION PROTECTIVE FINISH TO ALL REWORKED SURFACES IAW T.O. 1C-135(K)A-3-4 AND T.O.1-1-2 | | / | / |
| 95 | 080 MBPAB | REMOVE HOOKS AND LATCHES<br>REQ'D_____NOT REQ'D_____ | | / | / |
| 95 | 090 MBPAB | REMOVE FUEL STARTER EXHAUST ASSY P/N 90-3343-2<br>REQ'D_____NOT REQ'D_____ | | / | / |
| 95 | 100 MBPAB | FRAME #2 (-12)<br>REPAIR_____REPLACE_____NOT REQ'D_____ | | / | / |
| 95 | 110 MBPAB | LONGERON (-89)<br>REPAIR_____REPLACE_____NOT REQ'D_____ | | / | / |

## FLOW PROCESS CHART

SUBJECT Left Hand Side Cowl DATE 4/4/89

PCN: 1502 SA WCD: 1502SA WCD DATE: 89081

CHART BEGINS

CHART ENDS PREPARED BY: Tim Hall

770 'step deleted'

| SYMBOLS | DESCRIPTION | SYMBOLS | DESCRIPTION |
|---|---|---|---|
| 480 | Place Cowling in Fixture | 760 | Attach (-99) longeron to angle of -59 & -60 Frames |
| 490 | Replace -99 Longeron | 780 | Install tabs at end of -100 & -99 longerons |
| 500 | Replace #1 Frame, doubler and Latch & hook | 790 | Install -805 guide plate to -60 Frame |
| 510 | Attach -89 longeron to -60 Frame | 800 | Install alignment pins & plates in longerons |
| 520 | Repair or replace #1 Latch | 810 | Drill rivet patterns in new longerons |
| 521 | Replace #1 Hook S-96762 | 820 | Double countersink & install rivets in longerons |
| 530 | Replace Hinge Spear S-96719 | 830 | Install tabs at end of -98 Longerons |
| 540 | Tack Doublers to Longerons | 840 | Sand excess rivet butts on interior of longerons & -59 fr |
| 550 | Locate & Tack Fuel air exhaust assy | 850 | Install rivets & spacers aft end of longeron |
| 560 | Tack -111 door frame in place | 860 | Countersink & install rivets in all new skins |
| 570 | Remove & replace -1 skin | 930 | Install bumpers, aft side of -25 frame |
| 580 | Trim -1 skin | 940 | Inspect cowling |
| 590 | Remove & replace -6 skin | 950 | Shave all high rivets in skins |
| 600 | Remove & replace -2 skin | 960 | Place cowling in alignment fixture |
| 610 | Remove & replace Vent Louver | | Delay |
| 620 | Remove & replace -810 Doubler | | Move to Bldg 2280 2280 MABPCB |
| 630 | Remove & replace -4 skin | | Delay |
| 640 | Remove & replace -3 skin | 970 | Final Wash and Treat for corrosion |
| 650 | Remove & replace -5 skin | 980 | Paint interior & exterior |
| 660 | Shoot rivets in -59, -60, -61, -62, -63, -24 Frame | | Delay |
| [illegible] | Treat corrosion | | Move to MABPAB 95 MABPAB |
| [illegible] | Drill drain holes in cowling | | Delay |
| 690 | Drill alignment pin holes | 990 | Condition Tag |
| 700 | Remove cowling from fixture | | |
| 715 | Trim all skins | | |
| 720 | Drill Rivet Pattern in new longeron | | |
| 730 | Install Doubler & Drill Rivet Pattern in -99 longeron | | |
| 740 | Install clips @ latch openings | | |
| 750 | Attach clip to frame (-53) | | |

710 N/A (Final)

| 15025A * WORK CONTROL DOCUMENT * MISTR 1.DATE 88054 | | | PAGE 2 OF 7 PAGES | | |
|---|---|---|---|---|---|
| 15.DISP-16.PDN/ | | | | | |
| STATION | OP NO. | 17.WORK TO BE ACCOMPLISHED | 18.MECH | 19"P" | 20"Q" |
| 95 | 120<br>MBPAB | FRAME #3 (-60)<br>REPAIR_____REPLACE_____NOT REQ'D_____ | | / | / |
| 95 | 130<br>MBPAB | FRAME #4 (-81)<br>REPAIR_____REPLACE_____NOT REQ'D_____ | | / | / |
| 95 | 140<br>MBPAB | FRAME #5 (-15)<br>REPAIR_____REPLACE_____NOT REQ'D_____ | | / | / |
| 95 | 150<br>MBPAB | FRAME #6 (-16)<br>REPAIR_____REPLACE_____NOT REQ'D_____ | | / | / |
| 95 | 160<br>MBPAB | FRAME #7 (-17)<br>REPAIR_____REPLACE_____NOT REQ'D_____ | | / | / |
| 95 | 170<br>MBPAB | FRAME #8 (-18)<br>REPAIR_____REPLACE_____NOT REQ'D_____ | | / | / |
| 95 | 180<br>MBPAB | FIREWALL ASSEMBLY (-62)<br>REPAIR_____REPLACE_____NOT REQ'D_____ | | / | / |
| 95 | 190<br>MBPAB | FIRESEAL (-91)<br>REPAIR_____REPLACE_____NOT REQ'D_____ | | / | / |
| 95 | 200<br>MBPAB | FRAME #10 (-20)<br>REPAIR_____REPLACE_____NOT REQ'D_____ | | / | / |
| 95 | 210<br>MBPAB | FRAME #11 (-63)<br>REPAIR_____REPLACE_____NOT REQ'D_____ | | / | / |
| 95 | 220<br>MBPAB | FRAME #12 (-22)<br>REPAIR_____REPLACE_____NOT REQ'D_____ | | / | / |
| 95 | 230<br>MBPAB | FRAME #13 (-23)<br>REPAIR_____REPLACE_____NOT REQ'D_____ | | / | |
| 95 | 240<br>MBPAB | FRAME #14<br>REPAIR_____REPLACE_____NOT REQ'D_____ | | / | / |
| 95 | 250<br>MBPAB | FRAME #15<br>REPAIR_____REPLACE_____NOT REQ'D_____ | | / | |
| 95 | 260<br>MBPAB | REPLACE CLIPS AS REQUIRED | | / | / |
| 3001 | 270<br>MTPIW | WELD AS REQUIRED. REF T.O.1-1A-1<br>REQ'D_____NOT REQ'D_____<br>WELDING DONE AT POST K-73. | | / | / |
| 95 | 280<br>MBPAB | LONGERON (-8)<br>REPAIR_____REPLACE_____NOT REQ'D_____ | | / | / |
| 95 | 290<br>MBPAB | INSTALL SPRING CLIP P/N 60-2366-4<br>REQ'D_____NOT REQ'D_____ | | / | / |
| 95 | 300<br>MBPAB | LONGERON (-98)<br>REPAIR_____REPLACE_____NOT REQ'D_____ | | / | / |

| 15025A * WORK CONTROL DOCUMENT * MEDIR 1.DATE 88054 | PAGE 3 OF 7 PAGES |
|---|---|

| 15.DISP-16.PDN/STATION | OP NO. | 17.WORK TO BE ACCOMPLISHED | 18.MECH | 19"P" | 20"Q" |
|---|---|---|---|---|---|
| 95 | 310 MBPAB | INSTALL HOOKS<br>#2 5-96762 REQ'D____NOT REQ'D_____<br><br>#3 5-96766-1 REQ'D____NOT REQ'D_____<br><br>#4 5-96766-2 REQ'D____NOT REQ'D_____<br><br>#5 5-96762 REQ'D____NOT REQ'D____<br>#6 SPEAR 5-96719<br>REQ'D_____NOT REQ'D_____ | | / | / |
| 95 | 320 MBPAB | SEAL, 90-79888<br>REPLACE_____NOT REQ'D | | / | |
| 95 | 330 MBPAB | DOOR FRAME (-111)<br>REPLACE_____NOT REQ'D_____ | | / | / |
| 95 | 340 MBPAB | DOOR ASSEMBLY (-112)<br>REPAIR_____REPLACE_____NOT REQ'D_____ | | / | / |
| 95 | 345 MBPAB | LONGERON (-10)<br>REPAIR_____REPLACE_____NOT REQD | | / | / |
| 95 | 350 MBPAB | LONGERON (-113)<br>REPAIR_____REPLACE_____NOT REQ'D____ | | / | / |
| 95 | 360 MBPAB | LONGERON (-100)<br>REPAIR_____REPLACE_____NOT REQ'D____ | | / | / |
| 95 | 370 MBPAB | INSTALL LATCHES<br>#2 H-28-2<br>REPAIR____REPLACE____NOT REQ'D_____<br><br>#3 H-28-2<br>REPAIR____REPLACE____NOT REQ'D_____<br><br>#4 H-28-1<br>REPAIR____REPLACE____NOT REQ'D_____<br><br>#5 H-28-1<br>REPAIR____REPLACE____NOT REQ'D_____<br><br>#6 H-40-1<br>REPAIR____REPLACE____NOT REQ'D_____ | | / | / |
| 95 | 380 MBPAB | INSTALL PIN PLATES<br>REQ'D_____NOT REQ'D_____ | | / | / |
| 95 | 390 MBPAB | REMOVE STEEL MOUNTING PLATE (-77)<br>REQ'D_____NOT REQ'D_____ | | / | / |
| 95 | 400 MBPAB | DUCT, 90-3343-2<br>REPAIR_____REPLACE_____NOT REQ'D_____ | | / | / |
| 95 | 410 MBPAB | GASKET, 69-22576 1<br>REPLACE_____NOT REQ'D_____ | | / | / |

15025A * WORK CONTROL DOCUMENT * MISTR 1.DATE 88054 PAGE 4 OF 7 PAGES

| 15.DISP-16.PDN/ STATION | OP NO. | 17.WORK TO BE ACCOMPLISHED | 18.MECH | [illegible] | [illegible] |
|---|---|---|---|---|---|
| 95 | 420 MBPAB | SEAL BELLOWS, 120087A-10<br>REPLACE_____NOT REQ'D_____ | | / | / |
| 95 | 430 MBPAB | VENT, 50-6213-1<br>REQ'D_____NOT REQ'D_____ | | / | / |
| 95 | 440 MBPAB | DUCT ASSEMBLY, (-82)<br>REPLACE_____NOT REQ'D_____ | | / | / |
| 95 | 450 MBPAB | REMOVE #1 FRAME (-59)<br>REQ'D_____NOT REQ'D_____ | | / | / |
| 95 | 460 MBPAB | LONGERON (-99)<br>REQ'D_____NOT REQ'D_____ | | / | / |
| 95 | 470 MBPAB | DRILL SKIN OUT AS REQUIRED<br>#1 REQ'D_____NOT REQ'D_____<br>#2 REQ'D_____NOT REQ'D_____<br>#3 REQ'D_____NOT REQ'D_____<br>#4 REQ'D_____NOT REQ'D_____<br>#5 REQ'D_____NOT REQ'D_____<br>#6 REQ'D_____NOT REQ'D_____ | | / | / |
| 95 | 480 MBPAB | FIXTURE<br>PLACE COWLING IN FIXTURE | | / | / |
| 95 | 490 MBPAB | REPLACE (-99) LONGERON<br>REQ'D_____NOT REQ'D_____ | | / | / |
| 95 | 500 MBPAB | REPLACE #1 FRAME (-59),(-92)<br>DOUBLER & #1 LATCH & HOOK<br>REQ'D_____NOT REQ'D_____ | | / | / |
| 95 | 510 MBPAB | ATTACH (-89) LONGERON TO (-60) FRAME<br>REQ'D_____NOT REQ'D_____ | | / | / |
| 95 | 520 MBPAB | #1 LATCH H-28-3<br>REPAIR____REPLACE____NOT REQ'D____ | | / | / |
| 95 | 521 MBPAB | #1 HOOK 5-96762<br>REQ'D_____ NOT REQ'D____ | | / | / |
| 95 | 530 MBPAB | REPLACE HINGE SPEAR 5-96719<br>REQ'D_____NOT REQ'D_____ | | / | / |
| 95 | 540 MBPAB | TACK DOUBLERS TO LONGERONS<br>REQ'D_____NOT REQ'D_____ | | / | / |
| 95 | 550 MBPAB | LOCATE & TACK FUEL AIR EXHAUST<br>ASSEMBLY IN PLACE<br>REQ'D_____NOT REQ'D_____ | | / | / |

| STATION | OP NO. | 17.WORK TO BE ACCOMPLISHED | 18.MECH | 19"P" | 20"Q" |
|---|---|---|---|---|---|
| 95 | 560 MBPAB | TACK (-111) DOOR FRAME IN PLACE REQ'D_____NOT REQ'D_____ | | E | / |
| 95 | 570 MBPAB | REMOVE AND REPLACE (-1) SKIN REQ'D_____NOT REQ'D_____ | | E | / |
| 95 | 580 MBPAB | TRIM (-1) SKIN IAW SOW 82 1/4 REQ'D_____NOT REQ'D_____ | | E | / |
| 95 | 590 MBPAB | REMOVE & REPLACE (-) SKIN REQ'D_____NOT REQ'D_____ | | / | / |
| 95 | 600 MBPAB | REMOVE & REPLACE (-) SKIN REQ'D_____NOT REQ'D_____ | | / | / |
| 95 | 610 MBPAB | REMOVE & REPLACE VENT LOUVER P/N 50-3377-3 REQ'D_____NOT REQ'D_____ | | / | / |
| 95 | 620 MBPAB | REMOVE & REPLACE (-810) DOUBLER REQ'D_____NOT REQ'D_____ | | / | / |
| 95 | 630 MBPAB | REMOVE & REPLACE (-4) SKIN REQ'D_____NOT REQ'D_____ | | / | / |
| 95 | 640 MBPAB | REMOVE & REPLACE (-3) SKIN REQ'D_____NOT REQ'D_____ | | / | / |
| 95 | 650 MBPAB | REMOVE & REPLACE (-5) SKIN REQ'D_____NOT REQ'D_____ | | / | / |
| 95 | 660 MBPAB | SHOOT ALL RIVETS IN -59, -60, -61, -62, -63, & -24 FRAMES | | / | / |
| 95 | 670 MBPAB | REMOVE CORROSION & APPLY CORROSION PROTECTIVE FINISH TO ALL REWORKED SURFACES IAW T.O. 1C-135(K)A-3-4 AND T.O. 1-1-2 | | / | / |
| 95 | 680 MBPAB | DRILL DRAIN HOLES IN COWLING REQ'D_____NOT REQ'D_____ | | / | / |
| 95 | 690 MBPAB | DRILL ALIGNMENT PIN HOLES REQ'D_____NOT REQ'D_____ | | E | / |
| 95 | 700 MBPAB | REMOVE COWLING FROM FIXTURE | | / | / |
| 95 | 710 MBPAB | FINAL | / | / | / |
| 95 | 715 MBPAB | TRIM ALL SKINS IAW SOW 82-174 | | / | / |
| 95 | 720 MBPAB | DRILL RIVET PA[illegible] IN NEW LONGERON (-10) REQ'D_____NOT REQ'D_____ (-113) REQ'D_____NOT REQ'D_____ | | / | / |

(CONTINUED)

| 15035A * WORK CONTROL DOCUMENT * MISIR 1.DATE 88054 PAGE 5 OF 7 PAGES | | | | |
|---|---|---|---|---|
| 15.DISP 16.PDN/STATION | OP NO. | 17.WORK TO BE ACCOMPLISHED | 18.MECH | 19"P" 20"Q" |
| | | (-100) REQ'D_____NOT REQ'D_____ | | |
| 95 | 730 MBPAB | INSTALL (-37) DOUBLER & DRILL RIVET PATTERN IN (-99) LONGERON REQ'D_____NOT REQ'D_____ | | / / |
| 95 | 740 MBPAB | INSTALL CLIPS AT LATCH FITTINGS REQ'D_____NOT REQ'D_____ | | / / |
| 95 | 750 MBPAB | [illegible] REQ'D_____NOT REQ'D_____ | | / / |
| 95 | 760 MBPAB | ATTACH (-99) LONGERON TO ANGLE AT (-59) & (-60) FRAMES REQ'D_____NOT REQ'D_____ | | / |
| 95 | 770 MBPAB | STEP DELETED | | / / |
| 95 | 780 MBPAB | INSTALL TABS AT END OF (-100) & (-99) LONGERONS REQ'D_____NOT REQ'D_____ | | / / |
| 95 | 790 MBPAB | INSTALL (-805) GUIDE PLATE TO (-60) FRAME REQ'D_____NOT REQ'D_____ | | / / |
| 95 | 800 MBPAB | INSTALL ALIGNMENT PINS & PLATES IN LONGERONS<br>(-10) REQ'D_____NOT REQ'D_____<br>(-100) REQ'D_____NOT REQ'D_____<br>(-99) REQ'D_____NOT REQ'D_____ | | L / |
| 95 | 810 MBPAB | DRILL RIVET PATTERNS IN NEW LONGERONS<br>(-8) REQ'D_____NOT REQ'D_____<br>(-98) REQ'D_____NOT REQ'D_____ | | / / |
| 95 | 820 MBPAB | DOUBLE COUNTERSINK & INSTALL RIVETS IN LONGERONS:<br>(-8) REQ'D_____NOT REQ'D_____<br>(-98) REQ'D_____NOT REQ'D_____ | | / / |
| 95 | 830 MBPAB | INSTALL TABS AT END OF(-98)LONGERONS REQ'D_____NOT REQ'D_____ | | / / |
| 95 | 840 MBPAB | SAND EXCESS RIVET BUTTS ON INTERIOR OF LONGERONS & (-57) FRAME | | / / |

(CONTINUED)

15025A * WORK CONTROL DOCUMENT * MISTR 1.DATE 88054 PAGE 7 OF 7 PAGES

| 15.DISP-16.PDN/ STATION | OP NO. | 17.WORK TO BE ACCOMPLISHED | 18.MECH | 19"P" | 20"Q" |
|---|---|---|---|---|---|
| | | REQ'D____NOT REQ'D____ | | | |
| 95 | 850 MBPAB | INSTALL RIVETS AND SPACERS AT AFT END OF LONGERON<br>(-8) REQ'D____NOT REQ'D____<br>(-10) REQ'D____NOT REQ'D____ | | / | / |
| 95 | 860 MBPAB | COUNTERSINK & INSTALL RIVETS IN ALL NEW SKINS | | / | / |
| 95 | 930 MBPAB | INSTALL BUMPERS, AFT SIDE OF (-25) FRAME<br>REQ'D____NOT REQ'D____ | | / | / |
| 95 | 940 MBPAB | INSPECT COWLING AND ENSURE THAT ALL RIVETS ARE INSTALLED IN FRAMES, LONGERONS, CLIPS, DOUBLERS, ETC. | | E | / |
| 95 | 950 MBPAB | SHAVE ALL HIGH RIVETS IN SKINS | | / | / |
| 95 | 960 MBPAB | PLACE COWLING IN ALIGNMENT FIXTURE. ACCOMPLISH ALIGNMENT CHECK. MOVE TO MBPCB | | E | / |
| 2280 | 970 MBPCB | FINAL WASH ND TREAT FOR CORROSION | | / | / |
| 2280 | 980 MBPCB | PAINT INTERIOR AND EXTERIOR, INSTALL EXTERIOR STENCILS PER SOW 82-174 MOVE TO MBPAB | | / | / |
| 95 | 990 MBPAB | WORK COMPLETE, CONDITION TAG & IDENTIFY IW MAOI 65-1 DATED 9 MAY 77<br>---<br>NOTE: ANY WORK PERFORMED AND NOT COVERED BY THIS DOCUMENT WILL BE NUMBERED AND RECORDED BELOW. | / | E | / |

| | | |
|---|---|---|
| MABEBS | L. MULLINAX | 3-22-89 |
| MBPAB | L. STEWARD | 3-22-89 |
| MAQBF | T. HAYES | 3-22-89 |
| MABSCS | H. NGUYEN | 3-22-89 |

| FIGURE & INDEX NO. | PART NUMBER | 1 2 3 4 5 6 7 DESCRIPTION | UNITS PER ASSY | USE ON CODE |
|---|---|---|---|---|
| 1102- | 5-85638 15113A | PANEL ASSY, RIGHT HAND SIDE COWL, ENGI..E NACELLE (FOR NHA SEE FIG. 1100) | REF | A |
| | 39-32370-1 | PANEL ASSY, RIGHT HAND SIDE COWL, ENGINE NACELLE (FOR NHA SEE FIG. 1100) | 1 | A |
| | 7727042-10 | PANEL ASSY, RIGHT HAND SIDE COWL, ENGINE NACELLE (FOR NHA SEE FIG. 1100) | 1 | A |
| 1 | (DELETED) | | | |
| 2 | NAS1103-23DW | . BOLT (FOR REPLACEMENT ORDER BACB30NE3D23) | 1 | A |
| 3 | AN960D10L | . WASHER. | 4 | A |
| 4 | AN320-3 | . NUT (FOR REPLACEMENT ORDER BACN10JD103) | 1 | A |
| 5 | H28-3 | . LATCH ASSY, TOGGLE HOOK, ENGINE NACELLE COWL PANEL. (83014) (ALTERNATE 24L1-3 (71286)) (BOEING SPEC 10-2731-4) | 1 | A |
| 5A | 9-66304 | . U-BOLT, LATCH, ENGINE NACELLE COWL. (ATTACHING PARTS) | 4 | A |
| 5B | AN316-5R | . NUT | 8 | A |
| 6 | H29523-5 | . NUT, 12 PT, EXT WRENCHING, SELF-LKG 450°F (15653) (ALTERNATES FN22A524 (03680) LH3393-054 (72962) VN406A054 (92215)) (BACN10BL5L) (FOR REPLACEMENT ORDER 66796-524 (03680) (BACN10GW5)) --------*-------- | 8 | A |
| 6A | 9-66304 | . U-BOLT, LATCH, ENGINE NACELLE COWL. (ATTACHING PARTS) | 1 | A |
| 6B | AN316-5R | . NUT | 2 | A |
| 6C | H29523-5 | . NUT, 12 PT EXT WRENCHING, SELF-LKG°F (15653). (ALTERNATES FN22A524 (03680) LH3393-054 (72962) VN406A054 (92215)) (BACN10BL5L) (FOR REPLACEMENT ORDER 66796-524 (03680) (BACN10GW5)) --------*-------- | 2 | A |
| 6D | 90-3261-2 | . FITTING, ATTACHMENT, U-BOLT, NACELLE COWL PANEL | 1 | A |
| 6E | 90-3261 | . FITTING, ATTACHMENT, U-BOLT, NACELLE COWL PANEL | 2 | A |
| 6F | 90-3261-1 | . FITTING, ATTACHMENT, U-BOLT, NACELLE COWL PANEL | 2 | A |
| 7 | 60-3329 | . SEAL, ATTACHMENT, U-BOLT, ENGINE NACELLE COWL | 3 | A |
| 8 | 60-3329-1 | . SEAL, ATTACHMENT, U-BOLT, ENGINE NACELLE COWL | 1 | A |
| 9 | 66-4025 | . PIN, SHEAR, ENGINE NACELLE COWL PANEL (ATTACHING PARTS) | 1 | A |
| | NAS679A4W | . NUT (FOR REPLACEMENT ORDER BACN10JC4) --------*-------- | 1 | A |
| | 5-85638-55 | . DOOR INSTL, FORWARD FIRE, RIGHT HAND SIDE COWL PANEL, ENGINE NACELLE | 1 | A |
| | 5-85638-54 | . DOOR INSTL, AFT FIRE, RIGHT HAND SIDE COWL PANEL, ENGINE NACELLE | 1 | A |
| 9A | 6-35391-1 | . . SPRING, FIRE CONTROL DOOR | 3 | A |
| 10 | 90-2907 | . . DOOR ASSY, ACCESS, FIRE EXTINGUISHER, ENGINE. NACELLE (USED ON 5-85638-55) | 1 | A |
| 11 | 90-2908 | . . DOOR ASSY, ACCESS, FIRE EXTINGUISHER, ENGINE. NACELLE (USED ON 5-85638-54) | 1 | A |
| 12 | MS25083-1AA10 | . . . JUMPER ASSY (ATTACHING PARTS) | 1 | A |
| | NAS601-6 | . . . SCREW (FOR REPLACEMENT ORDER NAS601-6P) | 1 | A |
| | NAS679A06W | . . . NUT (FOR REPLACEMENT ORDER BACN10JC06). --------*-------- | 1 | A |
| 12A | 5-85638-53 | . . PAN, FIRE DOOR FWD (USED ON 5-85638-55) | 1 | A |
| 13 | 5-96762 | . HOOK, HINGE, NACELLE COWLING. | 2 | A |
| 14 | 5-96766 | . HOOK, HINGE, NACELLE COWLING. | 1 | A |
| 15 | 5-96766-1 | . HOOK, HINGE, NACELLE COWLING. | 1 | A |
| 16 | 5-96766-2 | . HOOK, HINGE, NACELLE COWLING. (ATTACHING PARTS) | 1 | A |
| | AN5-10A | . BOLT (FOR REPLACEMENT ORDER BACB30NE5-10) | 4 | A |
| | NAS1105-9W | . BOLT (FOR REPLACEMENT ORDER BACB30NE5-9). | 1 | A |
| | AN960-516L | . WASHER. | 10 | A |
| | MS21042L5 | . NUT (REPLACES NAS679A5 OR BACN10JC5). | 5 | A |
| | AN3-7A | . BOLT (FOR REPLACEMENT ORDER BACB30NE3-8). | 5 | A |
| | AN960-10L | . WASHER. | 5 | A |
| | NAS679A3W | . NUT (FOR REPLACEMENT ORDER BACN10JC3) --------*-------- | 5 | A |
| 17 | 5-96719-800 | . HINGE, SPEAR, ENGINE NACELLE COWL PANEL (ATTACHING PARTS) | 1 | A |
| | AN4-10A | . BOLT (FOR REPLACEMENT ORDER BACB30NE4-9). | 1 | A |
| | AN960-416 | . WASHER. | 1 | A |
| | AN960-416L | . WASHER. | 1 | A |
| | NAS679A4W | . NUT (REPLACEMENT ORDER BACN10JC4) | 1 | A |
| | AN3-7A | . BOLT (FOR REPLACEMENT ORDER BACB30NE3-8). | 1 | A |
| | AN960-10 | . WASHER. | 1 | A |
| | AN960-10L | . WASHER. | 1 | A |
| | NAS679A3W | . NUT (FOR REPLACEMENT ORDER BACN10JC3) --------*-------- | 1 | A |

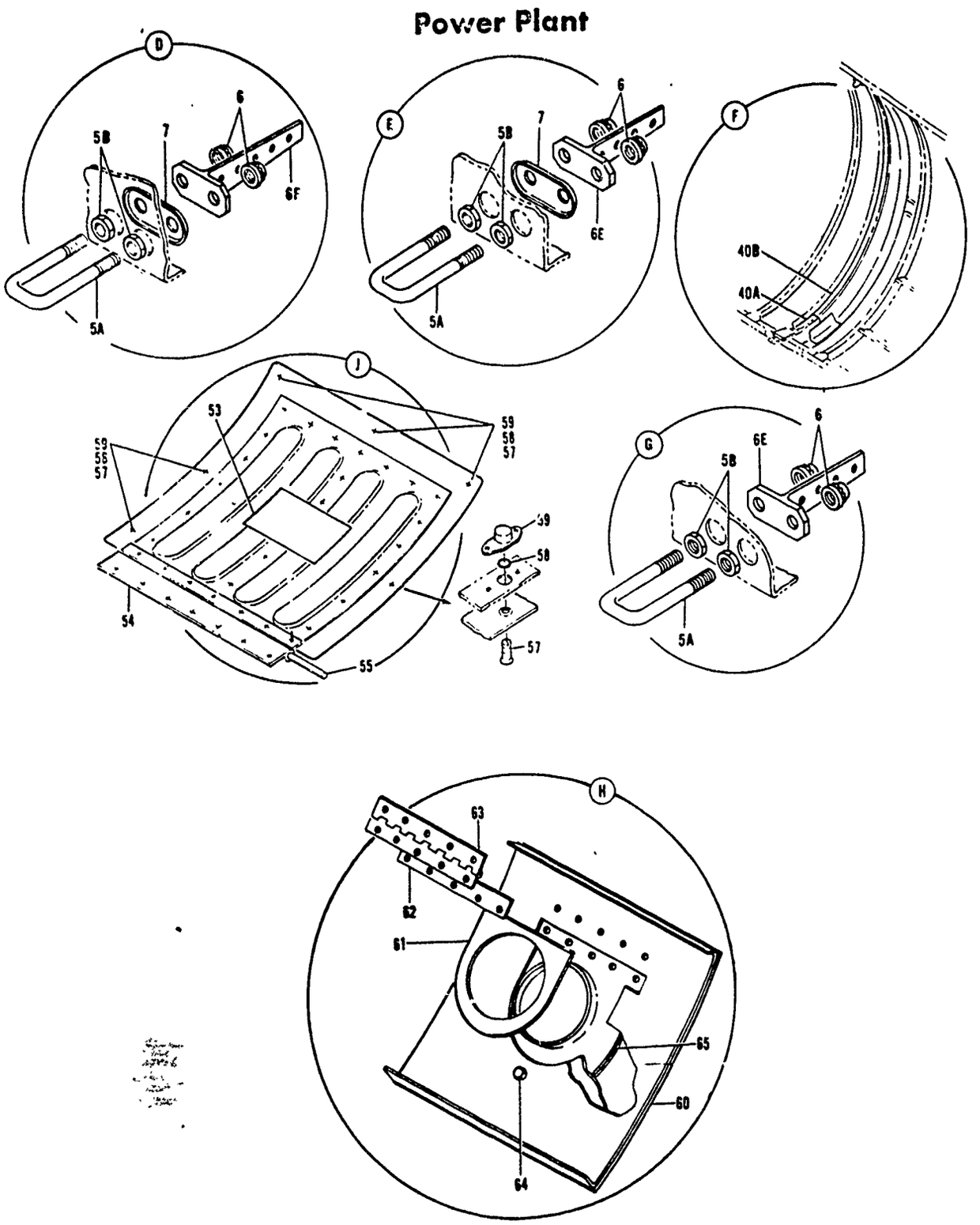


*Figure 1102. Engine Nacelle Right Hand Side Cowl Panel Assembly (Sheet 2 of 2)*

| FIGURE & INDEX NO. | PART NUMBER | DESCRIPTION<br>1 2 3 4 5 6 7 | UNITS PER ASSY | USE ON CODE |
|---|---|---|---|---|
| 1102- | | | | |
| | 65-1296 | . VENT INSTL, OIL BREATHER LINE, ENGINE . . . . . | 1 | A |
| 18 | 65-1296-1 | . . VENT ASSY, OIL BREATHER LINE, ENGINE. . . . . | 1 | A |
| | 65-1843 | . EXHAUST INSTL, WATER INJECTION PUMP ENGINE. . . . . | 1 | A |
| | 65-1843-10 | . EXHAUST INSTL, WATER INJECTION PUMP, ENGINE . . . . . | 1 | A |
| 19 | 1200874 | . . SEAL ASSY, EXIT BELLOWS, FUEL AIR STARTER EXHAUST . . (87273) (ALTERNATE 8449402 (71688) (BOEING SPEC 10-1748) (FOR REPLACEMENT ORDER 1200874-10 (87273) (BOEING SPEC 10-2748-1)) (FOR 1200874-10 REPAIR, ON 65-1843-10 INST ONLY, ORDER 69B25097-1) | 1 | A |
| 20 | 65-1843-6 | . . COVER, EXHAUST, WATER INJECTION PUMP, ENGINE (MAKE. . FROM 2024-T3 CLAD SHEET 0.040 X 7.2 X 8.6) (ATTACHING PARTS) | 1 | A |
| 20A | AN3-4A | . . BOLT (ALTERNATE NAS1303-2) (DO NOT SUBSTITUTE AN3-4A. FOR NAS1303-2) | 10 | A |
| 20B | AN3-3A | . . BOLT (ALTERNATE NAS1303-1) (DO NOT SUBSTITUTE AN3-3A. FOR NAS1303-1) | 10 | A |
| 20C | AN960D10 | . . WASHER. . . . . | 10 | A |
| 20D | NAS679A3W | . . NUT . . . . . | 10 | A |
| | | ---------*--------- | | |
| | 65-1843-19 | . . EXHAUST ASSY, WATER INJECTION PUMP ENGINE . . . . . | 1 | A |
| 20E | 65-1843-11 | . . . DUCT ASSY, EXHAUST, WATER INJECTION PUMP, ENGINE. . | 1 | A |
| 20F | 65-1843-1 | . . DUCT ASSY, EXHAUST WATER INJECTION PUMP, ENGINE . . . | 1 | A |
| 21 | 5-85638-1 | . SKIN, FORWARD, RIGHT HAND SIDE COWL PANEL, ENGINE . . . NACELLE | 1 | A |
| 22 | 5-85638-2 | . SKIN, MIDDLE, RIGHT HAND SIDE COWL PANEL, ENGINE. . . . NACELLE | 1 | A |
| 23 | 5-85638-4 | . SKIN, UPPER AFT, RIGHT HAND SIDE COWL PANEL, ENGINE . . NACELLE | 1 | A |
| 24 | 5-85638-3 | . SKIN, LOWER AFT, RIGHT HAND SIDE COWL PANEL, ENGINE . . NACELLE | 1 | A |
| | 5-85638-70 | . FRAME AND SKIN ASSY, PANEL, RIGHT HAND SIDE COWL, . . . ENGINE NACELLE | 1 | A |
| 25 | 5-85638-5 | . . SKIN, AFT, RIGHT HAND SIDE COWL PANEL, ENGINE . . . . NACELLE | 1 | A |
| 26 | 5-85638-20 | . . FRAME, PANEL STATION 180.00, RIGHT HAND SIDE COWL,. . ENGINE NACELLE | 1 | A |
| 27 | 5-85638-22 | . . FRAME, PANEL STATION 200.00, RIGHT HAND SIDE COWL,. . ENGINE NACELLE | 1 | A |
| 28 | 5-85638-23 | . . FRAME, PANEL STATION 210.00, RIGHT HAND SIDE COWL,. . ENGINE NACELLE | 1 | A |
| 29 | 5-85638-25 | . . FRAME, PANEL STATION 235.00, RIGHT HAND SIDE COWL,. . ENGINE NACELLE | 1 | A |
| 30 | 5-85638-26 | . . DOUBLER, PANEL, RIGHT HAND SIDE COWL, ENGINE NACELLE. | 1 | A |
| | 5-85638-48 | . LONGERON ASSY, PANEL, RIGHT HAND SIDE COWL, ENGINE. . . NACELLE (WHEN EXHAUSTED USE 5-85638-94) | 1 | A |
| | 5-85638-94 | . LONGERON ASSY, PANEL, RIGHT HAND SIDE COWL, ENGINE. . . NACELLE (SUITABLE SUB. FOR 5-85638-48) (WHEN EXHAUSTED USE 5-85638-99) | 1 | A |
| | 5-85638-99 | . LONGERON ASSY, PANEL, RIGHT HAND SIDE COWL, ENGINE. . . NACELLE | 1 | A |
| 31 | 5-85638-7 | . . LONGERON, UPPER FORWARD, RIGHT HAND SIDE COWL PANEL . ENGINE NACELLE | 1 | A |
| 31 | 5-85638-92 | . . LONGERON, UPPER FORWARD, RIGHT HAND SIDE COWL PANEL . ENGINE NACELLE | 1 | A |
| 31 | 5-85638-97 | . . LONGERON, UPPER FORWARD, RIGHT HAND SIDE COWL PANEL,. ENGINE NACELLE | 1 | A |
| | 5-85638-49 | . LONGERON ASSY, PANEL, RIGHT HAND SIDE COWL, ENGINE. . . NACELLE (FOR I/W INFO SEE 5-85638-91) | 1 | A |
| | 5-85638-91 | . LONGERON ASSY, PANEL, RIGHT HAND SIDE COWL, ENGINE. . . NACELLE | 1 | A |
| 32 | 5-85638-29 | . . DOUBLER, PANEL, RIGHT HAND SIDE COWL, ENGINE NACELLE. | 1 | A |
| 32 | 5-85638-89 | . . DOUBLER, PANEL, RIGHT HAND SIDE COWL, ENGINE NACELLE. | 1 | A |
| 33 | 5-85638-8 | . . LONGERON, UPPER AFT, RIGHT HAND SIDE COWL, ENGINE . . NACELLE | 1 | A |
| 34 | 5-85638-82 | . LONGERON, PANEL, RIGHT HAND SIDE COWL, ENGINE NACELLE . | 1 | A |
| | 5-85638-81 | . LONGERON ASSY, PANEL, RIGHT HAND SIDE COWL, ENGINE. . . NACELLE | 1 | A |
| 35 | 5-85638-59 | . . DOUBLER, PANEL, RIGHT HAND SIDE COWL, ENGINE NACELLE. | 1 | A |
| 36 | 5-85638-58 | . . LONGERON, PANEL, RIGHT HAND SIDE COWL, ENGINE NACELLE | 1 | A |

| FIGURE & INDEX NO. | PART NUMBER | 1 2 3 4 5 6 7 DESCRIPTION | UNITS PER ASSY | USE ON CODE |
|---|---|---|---|---|
| 1102- | | | | |
| 37 | 5-85638-60 | . DOUBLER, PANEL, RIGHT HAND SIDE COWL, ENGINE NACELLE. . | 1 | A |
| | 5-85638-46 | . LONGERON ASSY, PANEL, RIGHT HAND SIDE COWL, ENGINE. . . NACELLE | 1 | A |
| 38 | 5-85638-9 | . . LONGERON, LOWER FORWARD, RIGHT HAND SIDE COWL PANEL,. ENGINE NACELLE | 1 | A |
| | 5-85638-47 | . LONGERON ASSY, PANEL, RIGHT HAND SIDE COWL, ENGINE. . . NACELLE | 1 | A |
| 39 | 5-85638-10 | . . LONGERON, LOWER AFT, RIGHT HAND SIDE COWL PANEL,. . . ENGINE NACELLE | 1 | A |
| | 5-85638-38 | . FRAME ASSY, LOWER AFT, RIGHT HAND SIDE COWL PANEL,. . . ENGINE NACELLE | 1 | A |
| 40 | 5-85638-19 | . . FRAME, STATION 171.20 RIGHT HAND SIDE COWL PANEL. . . ENGINE NACELLE | 1 | A |
| 40A | 5-85638-803 | . . FRAME, STATION 171.20, RIGHT HAND SIDE COWL PANEL,. . ENGINE NACELLE | 1 | A |
| 40B | 5-85638-804 | . . FRAME, STATION 171.20, RIGHT HAND SIDE COWL PANEL,. . ENGINE NACELLE | 1 | A |
| | 5-85638-805 | . . SPLICE, STATION 171.20, RIGHT HAND SIDE COWL PANEL, . ENGINE NACELLE | 1 | A |
| | 5-85638-806 | . . SPLICE, STATION 171.20, RIGHT HAND SIDE COWL PANEL, . ENGINE NACELLE | 1 | A |
| | 5-85638-35 | . FRAME ASSY, STATION 171.20, RIGHT HAND SIDE COWL PANEL, ENGINE NACELLE | 1 | A |
| 41 | 5-85638-11 | . . FRAME, STATION 89.50, RIGHT HAND SIDE COWL PANEL, . . ENGINE NACELLE | 1 | A |
| 42 | 5-85638-12 | . FRAME, STATION 100.43, RIGHT HAND SIDE COWL PANEL . . . ENGINE NACELLE | 1 | A |
| | 5-85638-36 | . FRAME ASSY, STATION 100.43, RIGHT HAND SIDE COWL PANEL, ENGINE NACELLE | 1 | A |
| 43 | 5-85638-13 | . . FRAME, STATION 112.50, RIGHT HAND SIDE COWL PANEL,. . ENGINE NACELLE | 1 | A |
| 44 | 5-85638-14 | . FRAME, STATION 120.00, RIGHT HAND SIDE COWL PANEL,. . . ENGINE NACELLE | 1 | A |
| 45 | 5-85638-15 | . FRAME, STATION 131.50, RIGHT HAND SIDE COWL PANEL,. . . ENGINE NACELLE | 1 | A |
| | 5-85638-37 | . FRAME ASSY, COWL PANEL, RIGHT HAND SIDE, ENGINE NACELLE (WHEN EXHAUSTED USE 5-85638-101) | 1 | A |
| | 5-85638-101 | . FRAME ASSY, COWL PANEL, RIGHT HAND SIDE, ENGINE NACELLE | 1 | A |
| 46 | 5-85638-100 | . . FRAME, STATION 142.80, RIGHT HAND SIDE COWL PANEL,. . ENGINE NACELLE | 1 | A |
| 47 | 5-85638-17 | . FRAME, STATION 152.75, RIGHT HAND SIDE COWL PANEL,. . . ENGINE NACELLE | 1 | A |
| 48 | 5-85638-18 | . FRAME, STATION 161.50, RIGHT HAND SIDE COWL PANEL,. . . ENGINE NACELLE | 1 | A |
| | 5-85638-39 | . FRAME ASSY, STATION 161.50, RIGHT HAND SIDE COWL PANEL, ENGINE NACELLE | 1 | A |
| 49 | 5-85638-21 | . . FRAME, STATION 190.00, RIGHT HAND SIDE COWL PANEL,. . ENGINE NACELLE | 1 | A |
| | 5-85638-40 | . FRAME ASSY, STATION 190.00 RIGHT HAND SIDE COWL PANEL,. ENGINE NACELLE (WHEN EXHAUSTED USE 5-85638-90) | 1 | A |
| | 5-85638-90 | . FRAME ASSY, STATION 190.00, RIGHT HAND SIDE COWL PANEL, ENGINE NACELLE | 1 | A |
| 50 | 5-85638-24 | . . FRAME, STATION 225.00, RIGHT HAND SIDE COWL PANEL,. . ENGINE NACELLE | 1 | A |
| 50 | 5-85638-86 | . . FRAME, STATION 225.00, RIGHT HAND SIDE COWL PANEL,. . ENGINE NACELLE | 1 | A |
| 51 | 5-85638-34 | . SEGMENT, LONGERON, RIGHT HAND SIDE COWL PANEL, ENGINE . NACELLE | 1 | A |
| 52 | 5-[illegible]-6 | . CAP, RIGHT HAND SIDE COWL PANEL, ENGINE NACELLE . . . . | 1 | A |
| | 35[illegible]376-1 | . DOOR ASSY, ACCESS, PNEUMATIC CARTRIDGE STARTER. . . . . | 1 | A |
| 53 | 35[illegible]786-1 | . . MARKER, FOIL. . . . . | 1 | A |
| 54 | 35[illegible]376-5 | . . HINGE HALF (MAKE FROM MS20001PH6-1040). . . . . | 2 | A |
| 55 | MS20253P2-1015 | . . PIN, HINGE. . . . . | 1 | A |
| 56 | F5T14 | . . STUD (72794). . . . . | 3 | A |
| 57 | F5T9 | . . STUD (72794). . . . . | 3 | A |
| 58 | GH5 | . . GROMMET (72794) . . . . . | 6 | A |
| 59 | RF5 | . RECEPTACLE (72794). . . . . | 6 | A |

| FIGURE & INDEX NO. | PART NUMBER | 1 2 3 4 5 6 7 DESCRIPTION | UNITS PER ASSY | USE ON CODE |
|---|---|---|---|---|
| 1102- | | | | |
| | 7727014-10 | . DOOR ASSY, CONSTANT SPEED DRIVE ACCESS. . . . . | 1 | A |
| 60 | 7727014-03 | . . FILLER (MADE FROM AL ALLOY SHT PER QQ-A-250/4 2024T .050 X 10.00 X 10.40) | 1 | A |
| 61 | 7727014-05 | . . DOUBLER, (MADE FROM AL ALLOY 2024-T4 PER QQ-A-250/4 .050 THK) | 1 | A |
| 62 | 7727014-07 | . . SPACER, (MADE FROM AL ALLOY 2024-T4 PER QQ-A-450/4. .050 THK) | 1 | A |
| 63 | AN257-4-5 | . . HINGE, 5 INCHES LONG. . . . . | 1 | A |
| 64 | 99947P-130 | . . RECEPTACLE, SPRING (83058). . . . . | 1 | A |
| 65 | 5-85637-112 | . . DOOR. . . . . | 1 | A |
| | | A 2201 THRU 2299, 3001 THRU 3015 | | |
| | | ALSO SEE FIGURE 1132 | | |

| 15113A * WORK CONTROL DOCUMENT * MISTR 1.DATE 88054 PAGE 1 OF 9 PAGES! |
|---|

| 2.ORIG/PROD NR | 3.QUANTITY | 4.PROD SECTION/RCC | 5.DATE SCHED | 6.DATE COMP |
|---|---|---|---|---|
| 15113A | | MABPAB | 89093 | |

| 7.PART NUMBER | 9.ITEM SERIAL NR | 8/12.TECH DATA/OPTIONAL |
|---|---|---|
| 772-7042-10 | | DRWG 5-85638 |
| | | SOW 1560FL-82-174 |
| 10.MODEL/DESIGN/SERIES | 11.STOCK NR | T.O.1-1A-1 |
| KC-135 | 1560010419310FL | T.O.1-1-2 |
| | | T.O.1C-135(K)A-3-1 |
| 13.MISC | 14.NOUN/END ITEM NOUN | T.O.1C-135(K)A-3-4 |
| | SIDE COWL PANEL R.H. | 1C-135(K)A-3-1.3-4 |
| | L. MULLINAX/MABEBS/65246 | |

| 15.DISP-16.PDN/ STATION | OP NO. | 17.WORK TO BE ACCOMPLISHED | 18.MECH | 17"P" | 20"Q" |
|---|---|---|---|---|---|
| 2122 | 010 MBPCD | RECEIVE & UNCRATE SIDE COWL. NOTE OBSERVE CAUTION THAT SIDE COWL IS NOT DAMAGED DURING UNCRATING. | | / | / |
| 2122 | 020 MBPCA | WASH INTERIOR & EXTERIOR IAW T.O. 1C-135(K)A-3-4, PARA 11-7 AND SOW 1560FL-82-174. | | / | / |
| 2122 | 030 MBPCA | STRIP ALL INTERIOR & EXTERIOR PAINT FROM SIDE COWL IAW T.O.1C-135(K) A-3-4, PARA 11-15 SOW OC1560FL-82-174 | | / | / |
| 2122 | 040 MBPCA | ABRASIVE BLAST SIDE COWL IAW T.O. 1C-135(K)A-3-4 SEC 9 PARA 16 AND T.O. 1-1-2. | | / | / |
| 95 | 050 MBPAB | ACCOMPLISH VISUAL INSPECTION IAW SOW 82-174. | | / | / |
| 95 | 065 MBPAB | TEARDOWN NOTE: DEPOT OVERHAUL OF J-57 RIGHT HAND SIDE COWL WILL BE DONE IN ACCORDANCE WITH INSTRUCTIONS IN SOW OC1560/82-174 AND 1C-135(K)A-3-4 | / | / | / |
| 95 | 070 MBPAB | REMOVE CORROSION & APPLY CORROSION PROTECTIVE FINISH TO ALL REWORKED SURFACCES IAW T.O. 1C-135(K)A-3-4 AND T.O. 1-1-2 | | / | / |
| 3001 | 075 MTPIW | WELD AS REQD. REF T.O.1-1A-1 REQD-----NOT REQD----- WELDING DONE AT POST K-73 | | / | / |
| 95 | 080 MBPAB | ASSEMBLE (-81) LONGERON (-85) DOUBLER AND 637-131 PLATE. REQ'D_____NOT REQ'D_____ | | / | / |
| 95 | 090 MBPAB | STEP DELETED | / | / | / |
| 95 | 100 MBPAB | LONGERON (-46) REPAIR_____REPLACE_____NOT REQ'D____ | | / | / |

15113A * WORK CONTROL DOCUMENT * MSTR 1.DATE 88054 PAGE 2 OF 9 PAGES

| 15.DISP | 16.PDN/STATION | OP NO. | 17.WORK TO BE ACCOMPLISHED | 18.MECH | 19"P" | 20"Q" |
|---|---|---|---|---|---|---|
| | 95 | 110 MBPAB | LONGERON (-34) REPAIR_____REPLACE_____NOT REQ'D____ | | E | / |
| | 95 | 120 MBPAB | LONGERON (-47) REPAIR_____REPLACE_____NOT REQ'D____ | | / | / |
| | 95 | 130 MBPAB | ASSEMBLE -75 TO -99 REQ'D_____NOT REQ'D_____ | | / | / |
| | 95 | 140 MBPAB | LONGERON (-99) REPAIR_____REPLACE_____NOT REQ'D____ | | / | / |
| | 95 | 150 MBPAB | ASSEMBLE -73 TO -91 REQ'D_____NOT REQ'D_____ | | / | / |
| | 95 | 160 MBPAB | LONGERON (-91) REPAIR_____REPLACE_____NOT REQ'D____ | | / | / |
| | 95 | 170 MBPAB | LONGERON (-62) REPAIR_____REPLACE_____NOT REQ'D____ | | / | / |
| | 95 | 180 MBPAB | FRAME #1, (-11) OR (-35) ASSEMBLY REPAIR_____NOT REQ'D_____ | | E | / |
| | 95 | 190 MBPAB | FRAME #2 (-12) REPAIR_____REPLACE_____NOT REQ'D____ | | / | / |
| | 95 | 200 MBPAB | FRAME #3 (-13) OR (-36) ASSEMBLY REPAIR_____REPLACE_____NOT REQ'D____ | | / | / |
| | 95 | 210 MBPAB | FRAME #4 (-14) REPAIR_____REPLACE_____NOT REQ'D____ | | / | / |
| | 95 | 220 MBPAB | FRAME #5 (-15) REPAIR_____NOT REQ'D_____ | | / | / |
| | 95 | 230 MBPAB | FRAME #6 (-16) OR (-101) ASSEMBLY REPAIR_____REPLACE_____NOT REQ'D____ | | / | / |
| | 95 | 240 MBPAB | FRAME #7 (-17) REPAIR_____REPLACE_____NOT REQ'D____ | | / | / |
| | 95 | 250 MBPAB | FRAME #8 (-18) REPAIR_____REPLACE_____NOT REQ'D____ | | / | / |
| | 95 | 260 MBPAB | FRAME #9 (-19) OR (-38) ASSEMBLY REPAIR_____NOT REQ'D_____ | | / | / |
| | 95 | 270 MBPAB | FRAME #10 (-20) REPAIR_____REPLACE_____NOT REQ'D____ | | / | / |
| | 95 | 280 MBPAB | FRAME #11 (-21) OR (-39) ASSEMBLY REPAIR_____NOT REQ'D_____ | | / | / |
| | 95 | 290 MBPAB | FRAME #12, (-22) REPAIR-----REPLACE-------NOT REQD------ | | / | / |

| 15.DISP STATION | 16.FDN/ OP NO. | 17.WORK TO BE ACCOMPLISHED | 18.MECH | 19"P" | 20"Q" |
|---|---|---|---|---|---|
| 95 | 300 MBPAB | ASSEMBLE 60-4921 TO 638-23 FRAME<br>REQ'D_____NOT REQ'D_____ | | / | / |
| 95 | 310 MBPAB | FRAME #13 (-23)<br>REPAIR_____REPLACE_____NOT REQ'D____ | | / | / |
| 95 | 320 MBPAB | FRAME #14 (-24) OR (-90) ASSEMBLY<br>REPAIR_____NOT REQ'D_____ | | / | / |
| 95 | 330 MBPAB | FRAME #15 (-25)<br>REPAIR_____REPLACE_____NOT REQ'D____ | | / | / |
| 95 | 340 MBPAB | REPAIR OR REPLACE ALL ANGLES AS NECESSARY. | | / | / |
| 95 | 350 MBPAB | BELLOWS SEAL, 1200874-10<br>REPLACE_____NOT REQ'D_____ | | / | / |
| 95 | 360 MBPAB | BELLOWS, 65-1843-1<br>REPAIR_____REPLACE_____NOT REQ'D____ | | / | / |
| 95 | 370 MBPAB | DRILL SKINS AS REQ'D<br>#1 REQ'D 100 NOT REQ'D_____ 1.0<br>#2 REQ'D 80 NOT REQ'D_____ 1.0<br>#3 REQ'D 50 NOT REQ'D_____ .50<br>#4 REQ'D 75 NOT REQ'D_____ .75<br>#5 REQ'D 25 NOT REQ'D_____ .25 | HRS ≈ 3.25 | / | / |
| 95 | 380 MBPAB | SKINS REPAIRED IAW SOW<br>#1 REQ'D_____NOT REQ'D_____<br>#2 REQ'D_____NOT REQ'D_____<br>#3 REQ'D_____NOT REQ'D_____<br>#4 REQ'D_____NOT REQ'D_____<br>#5 REQ'D_____NOT REQ'D_____ | | / | / |
| 95 | 390 MBPAB | FIXTURE<br>PLACE COWLING IN FIXTURE | | / | / |
| 95 | 400 MBPAB | REMOVE CORROSION & APPLY CORROSION PROTECTIVE FINISH TO ALL REWORKED SURFACES IAW T.O. 1C-135(K)A-3-4 AND T.O. 1-1-2 | | / | / |
| 95 | 410 MBPAB | REPLACE (-81) LONGERON<br>REQ'D_____NOT REQ'D_____ | | / | / |
| 95 | 420 MBPAB | REMOVE & REPLACE (-11) FRAME OR (-35) ASSEMBLY | | / | / |

(CONTINUED)

| 15.DISP-16.PDN/STATION | OP NO. | 17.WORK TO BE ACCOMPLISHED | 18.MECH | 19"P" | 20"Q" |
|---|---|---|---|---|---|
| | | REQ'D_____NOT REQ'D_____ | | | |
| 95 | 430 MBPAB | POSITION (-12) FRAME REQ'D_____NOT REQ'D_____ | | / | / |
| 95 | 440 MBPAB | POSITION (-13) FRAME OR (-36) ASSY REQ'D_____NOT REQ'D_____ | | / | / |
| 95 | 450 MBPAB | POSITION (-14) FRAME REQ'D_____NOT REQ'D_____ | | / | / |
| 95 | 455 MBPAB | POSITION (-15) FRAME REQ'D_____NOT REQ'D_____ | | / | / |
| 95 | 460 MBPAB | REMOVE & REPLACE (-15)FRAME REQ'D_____NOT REQ'D_____ | | / | / |
| 95 | 470 MBPAB | POSITION (-16) FRAME OR (-101) ASSY REQ'D_____NOT REQ'D_____ | | / | / |
| 95 | 480 MBPAB | POSITION (-17) FRAME REQ'D_____NOT REQ'D_____ | | / | / |
| 95 | 490 MBPAB | POSITION (-18) FRAME REQ'D_____NOT REQ'D_____ | | / | / |
| 95 | 500 MBPAB | REMOVE & REPLACE (-19) FRAME OR (-38) ASSEMBLY REQ'D_____NOT REQ'D_____ | | / | / |
| 95 | 505 MBPAB | POSITION (-19) FRAME REQ'D_____NOT REQ'D_____ | | / | / |
| 95 | 510 MBPAB | POSITION (-20) FRAME REQ'D_____NOT REQ'D_____ | | / | / |
| 95 | 515 MBPAB | POSITION (-21) FRAME REQ'D_____NOT REQ'D_____ | | / | / |
| 95 | 520 MBPAB | REMOVE & REPLACE (-21) FRAME OR (-39) ASSEMBLY REQ'D_____NOT REQ'D_____ | | / | / |
| 95 | 525 MBPAB | POSITION (-22) FRAME REQ'D_____NOT REQ'D_____ | | / | / |
| 95 | 530 MBPAB | POSITION (-23) FRAME REQ'D_____NOT REQ'D_____ | | / | / |
| 95 | 540 MBPAB | REMOVE & REPLACE (-24) FRAME REQ'D_____NOT REQ'D_____ | | E | / |
| 95 | 545 MBPAB | POSITION (-24) FRAME REQ'D_____NOT REQ'D_____ | | / | / |
| 95 | 550 MBPAB | POSITION (-25) FRAME REQ'D_____NOT REQ'D_____ | | / | / |

15113A * WORK CONTROL DOCUMENT * MISTR 1.DATE 88054 PAGE 5 OF 7 PAGES

| 15.DISP-16.PDN/ STATION | OP NO. | 17.WORK TO BE ACCOMPLISHED | 18.MECH | 19"P" | 20"Q" |
|---|---|---|---|---|---|
| 95 | 560 MBPAB | #1 SKIN (-1) REPLACE_____NOT REQ'D____ | | E | / |
| 95 | 565 MBPAB | #2 SKIN (-2) NOTE IF #2 SKIN IS REPLACED DELETE 65-63019-11 VENT REPLACE_____NOT REQ'D____ | | / | / |
| 95 | 570 MBPAB | #3 SKIN (-3) REPLACE_____NOT REQ'D____ | | / | / |
| 95 | 575 MBPAB | #4 SKIN (-4) REPLACE_____NOT REQ'D____ | | / | / |
| 95 | 580 MBPAB | #5 SKIN (-5) REPLACE_____NOT REQ'D____ | | / | / |
| 95 | 585 MBPAB | SPLICE (-26) REPAIR_____REPLACE_____NOT REQ'D___ | | / | / |
| 95 | 590 MBPAB | BELLOWS, 65-1843-1 REPLACE_____NOT REQ'D____ | | / | / |
| 95 | 595 MBPAB | DOUBLER 50-3377-5 REPAIR_____REPLACE_____NOT REQ'D____ | | / | / |
| 95 | 600 MBPAB | LOUVER 50-3377-3 REPAIR_____REPLACE_____NOT REQ'D____ | | / | / |
| 95 | 605 MBPAB | STARTER CARTRIDGE DOOR, 35-32376-1 REPAIR_____REPLACE_____NOT REQ'D____ | | / | / |
| 95 | 610 MBPAB | REPLACE "T" ANGLES AS REQUIRED REQ'D_____NOT REQ'D_____ | | / | / |
| 95 | 615 MBPAB | REMOVE COWL FROM FIXTURE ------ | | / | / |
| 95 | 620 MBPAB | FINAL ASSEMBLY | / | / | / |
| 95 | 625 MBPAB | INSTALL (-81) LONGERON REQ'D_____NOT REQ'D_____ | | / | / |
| 95 | 630 MBPAB | INSTALL (-57) LONGERON REQ'D_____NOT REQ'D_____ | | / | / |
| 95 | 635 MBPAB | INSTALL (-46) LONGERON REQ'D_____NOT REQ'D_____ | | / | / |
| 95 | 640 MBPAB | INSTALL (-34) LONGERON REQ'D_____NOT REQ'D_____ | | / | / |
| 95 | 645 MBPAB | INSTALL (-47) LONGERON REQ'D_____NOT REQ'D_____ | | / | / |

15113A * WORK CONTROL DOCUMENT * MSTR 1.DATE 88054 PAGE 6 OF 9 PAGES

| 15.DISP-16.PDN/ STATION | OP NO. | 17.WORK TO BE ACCOMPLISHED | 18.MECH | 19"P" | 20"Q" |
|---|---|---|---|---|---|
| 95 | 650 MBPAB | INSTALL (-28)DOUBLER REQ'D_____NOT REQ'D_____ | | / | / |
| 95 | 655 MBPAB | INSTALL (-99) LONGERON REQ'D_____NOT REQ'D_____ | | / | / |
| 95 | 660 MBPAB | INSTALL (-98) DOUBLER REQ'D_____NOT REQ'D_____ | | / | / |
| 95 | 665 MBPAB | INSTALL (-91) LONGERON REQ'D_____NOT REQ'D_____ | | / | / |
| 95 | 670 MBPAB | INSTALL(-62) LONGERON REQ'D_____NOT REQ'D_____ | | / | / |
| 95 | 675 MBPAB | INSTALL #2 FRAME (-12) REQ'D_____NOT REQ'D_____ | | / | / |
| 95 | 680 MBPAB | INSTALL #3 FRAME (-13) OR (-36) ASSY REQ'D_____NOT REQ'D_____ | | / | / |
| 95 | 685 MBPAB | INSTALL #4 FRAME (-14) REQ'D_____NOT REQ'D_____ | | / | / |
| 95 | 690 MBPAB | INSTALL #5 FRAME (-15) REQ'D_____NOT REQ'D_____ | | / | / |
| 95 | 700 MBPAB | INSTALL #6 FRAME (-16) OR ( 101) ASSEMBLY REQ'D_____NOT REQ'D_____ | | / | / |
| 95 | 705 MBPAB | INSTALL #7 FRAME (-17) REQ'D_____NOT REQ'D_____ | | / | / |
| 95 | 710 MBPAB | INSTALL #8 FRAME (-18) REQ'D_____NOT REQ'D_____ | | / | / |
| 95 | 715 MBPAB | INSTALL #9 FRAME (-19) OR (-38) ASSEMBLY REQ'D_____NOT REQ'D_____ | | / | / |
| 95 | 720 MBPAB | INSTALL #10 FRAME (-20) REQ'D_____NOT REQ'D_____ | | / | / |
| 95 | 725 MBPAB | INSTALL #11 FRAME (-21) OR (-39) ASSEMBLY REQ'D_____NOT REQ'D_____ | | / | / |
| 95 | 730 MBPAB | INSTALL #12 FRAME (-22) REQ'D_____NOT REQ'D_____ | | / | / |
| 95 | 735 MBPAB | INSTALL #13 FRAME (-23) REQ'D_____NOT REQ'D_____ | | / | / |
| 95 | 740 MBPAB | INSTALL #14 FRAME (-24) OR (-90) ASSEMBLY REQ'D_____NOT REQ'D_____ | | / | / |

| 15.DISP-16.PDN/ STATION | OP NO. | 17.WORK TO BE ACCOMPLISHED | 18.MECH | 19"P" | 20"Q" |
|---|---|---|---|---|---|
| 95 | 745 MBPAB | INSTALL #15 FRAME (-25)<br>REQ'D_____NOT REQ'D_____ | | / | / |
| 95 | 750 MBPAB | FIREDOOR PAN (-53)<br>REPAIR_____REPLACE_____NOT REQ'D_____ | | / | / |
| 95 | 755 MBPAB | INSTALL FIRE EXTINGUISHER DOOR (90-2907)<br>REQ'D_____NOT REQ'D_____ | | / | / |
| 95 | 760 MBPAB | FIREDOOR PAN (-52)<br>REPAIR_____REPLACE_____NOT REQ'D_____ | | / | / |
| 95 | 765 MBPAB | INSTALL FIRE EXTINGUISHER DOOR (90-2908)<br>REQ'D_____NOT REQ'D_____ | | / | / |
| 95 | 767 MBPAB | ENSURE FIRE EXTINGUISHER ACCESS DOORS COMPLY WITH STEP 8 SEC 3.2.5 SOW QC1560FL/82-174. | | / | / |
| 95 | 770 MBPAB | SPRING CLIPS P/N 6-35391-1<br>REPLACE_____NOT REQ'D_____<br>NOTE:<br>ENSURE SPRING CLIPS ARE MADE OF STAINLESS STEEL | | / | / |
| 95 | 773 MBPAB | INSTALL VENT ASSY (50-6075-8)<br>REQ'D-----NOT REQ'D----- | | / | / |
| 95 | 775 MBPAB | INSTALL VENT ASSEMBLY (90-5528-1)<br>REQ'D_____NOT REQ'D_____ | | / | / |
| 95 | 780 MBPAB | INSTALL CONSTANT SPEED/DRIVE DOOR 77-27014-10<br>REQ'D_____NOT REQ'D_____ | | / | / |
| 95 | 785 MBPAB | INSTALL STARTER CARTRIDGE DOOR 35-32376-1<br>REQ'D_____NOT REQ'D_____ | | / | / |
| 95 | 790 MBPAB | INSTALL (-51) STAINLESS STEEL PLATE<br>REQ'D_____NOT REQ'D_____ | | / | / |
| 95 | 793 MBPAB | INSTALL (-50) STAINLESS STEEL PLATE<br>REQ'D------NOT REQ'D------ | | / | / |
| 95 | 795 MBPAB | INSTALL CAP COVER (60-2866-3)<br>REQ'D_____NOT REQ'D_____ | | / | / |
| 95 | 800 MBPAB | INSTALL DRAIN CAP (6-5989-1)<br>REQ'D_____NOT REQ'D_____ | | / | / |
| 95 | 805 MBPAB | INSTALL BUMPERS (60-6174)<br>REQ'D_____NOT REQ'D_____ | | / | / |

| 15.DISP-16.PDN/ STATION | OP NO. | 17.WORK TO BE ACCOMPLISHED | 18.MECH | 19"P" | 20"Q" |
|---|---|---|---|---|---|
| 95 | 810 MBPAB | INSTALL OIL BREATHER VENT 65-1296-1 REQ'D_____NOT REQ'D_____ | | / | / |
| 95 | 815 MBPAB | INSTALL (-56) PLATE REQ'D_____NOT REQ'D_____ | | / | / |
| 95 | 820 MBPAB | INSTALL (-72) PLATE REQ'D_____NOT REQ'D_____ | | / | / |
| 95 | 825 MBPAB | INSTALL (-1) SKIN REQ'D_____NOT REQ'D_____ | | L | / |
| 95 | 830 MBPAB | INSTALL (-2) SKIN REQ'D_____NOT REQ'D_____ | | / | / |
| 95 | 835 MBPAB | INSTALL (-3) SKIN REQ'D_____NOT REQ'D_____ | | / | / |
| 95 | 840 MBPAB | INSTALL (-4) SKIN REQ'D_____NOT REQ'D_____ | | / | / |
| 95 | 845 MBPAB | INSTALL (-5) SKIN REQ'D_____NOT REQ'D_____ | | / | / |
| 95 | 850 MBPAB | INSTALL LATCHES AS REQUIRED REQ'D_____NOT REQ'D_____ | | / | / |
| 95 | 855 MBPAB | INSTALL #1 HINGE HOOK P/N 5-96762 REQ'D_____NOT REQ'D_____ | | / | / |
| 95 | 860 MBPAB | INSTALL #2 HINGE HOOK 5-96766 REQ'D_____NOT REQ'D_____ | | / | / |
| 95 | 865 MBPAB | INSTALL #3 HINGE HOOK 5-96766-1 REQ'D_____NOT REQ'D_____ | | / | / |
| 95 | 870 MBPAB | INSTALL #4 HINGE HOOK 5-96766-2 REQ'D_____NOT REQ'D_____ | | / | / |
| 95 | 875 MBPAB | INSTALL #5 HINGE HOOK 5-96762 REQ'D_____NOT REQ'D_____ | | / | / |
| 95 | 880 MBPAB | INSTALL HINGE SPEAR (5-96719) REQ'D_____NOT REQ'D_____ | | / | / |
| 95 | 890 MBPAB | DRILL ALL DRAIN HOLES IAW SOW 0C1560FL/82-174 | | / | / |
| 95 | 895 MBPAB | INS ALL CLIPS AS REQUIRED | | / | / |
| 95 | 900 MBPAB | INSPECT COWLING, ENSURE THAT ALL RIVETS ARE INSTALLED IN FRAMES, | | E | / |

(CONTINUED)

| 15113A * WORK CONTROL DOCUMENT * MISTR 1.DATE 88054 | | | | PAGE 9 OF 9 PAGES |
|---|---|---|---|---|
| 15.DISP-16.PDN/ STATION | OP NO. | 17.WORK TO BE ACCOMPLISHED | 18.MECH | 19"P" | 20"Q" |
| | | LONGERONS, CLIPS, ANGLES, DOUBLERS, SKINS, ETC. | | | |
| 95 | 905 MBPAB | SHAVE ALL HIGH RIVETS IN SKIN AND TRIM LONGERONS AND AFT EDGES. | | / | / |
| 95 | 910 MBPAB | PLACE COWLING IN ALIGNMENT FIXTURE AND ACCOMPLISH ALIGNMENT INSPECTION CHECK. | | E | / |
| 95 | 915 MBPAB | TRIM #1 SKIN IAW SOW | | E | / |
| 95 | 920 MBPAB | INSTALL ALIGNMENT PLATES AND PINS MOVE TO MBPCB | | / | / |
| 2280 | 930 MBPCB | FINAL WASH & TREAT FOR CORROSION | | / | / |
| 2280 | 935 MBPCB | PAINT INTERIOR & EXTERIOR, INSTALL EXTERIOR STENCILS PER SOW OC1560FL/82-174 MOVE TO MBPAB | | / | / |
| 95 | 940 MBPAB | WORK COMPLETE, CONDITION TAG & IDENTIFY IAW MA01 65-1 | / | E | / |
| | | NOTE: ANY WORK PERFORMED AND NOT COVERED BY THIS DOCUMENT WILL BE NUMBERED AND RECORDED BELOW. | | | |
| | | MABPAB L. STEWARD 3-22-89<br>MABEBS L. MULLINAX 3-22-89<br>MAQBF T. HAYES 3-22-89<br>MABSCS H. NGUYEN 3-22-89 | | | |

# FLOW CHART
# SIDE COWL REPAIR SHOP

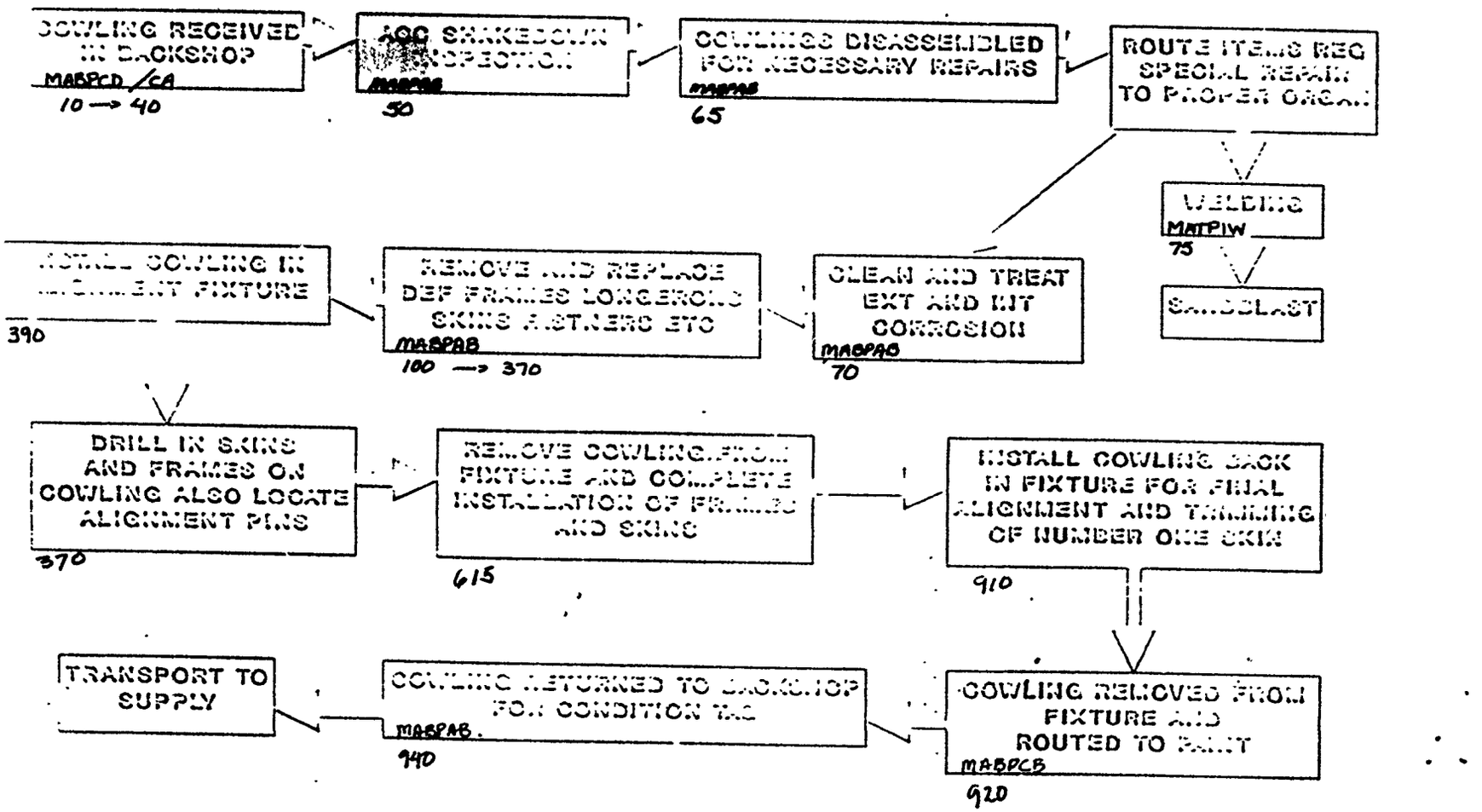

15119A (RH)
OR
15321A (LH)

## Fuselage
### Center Section

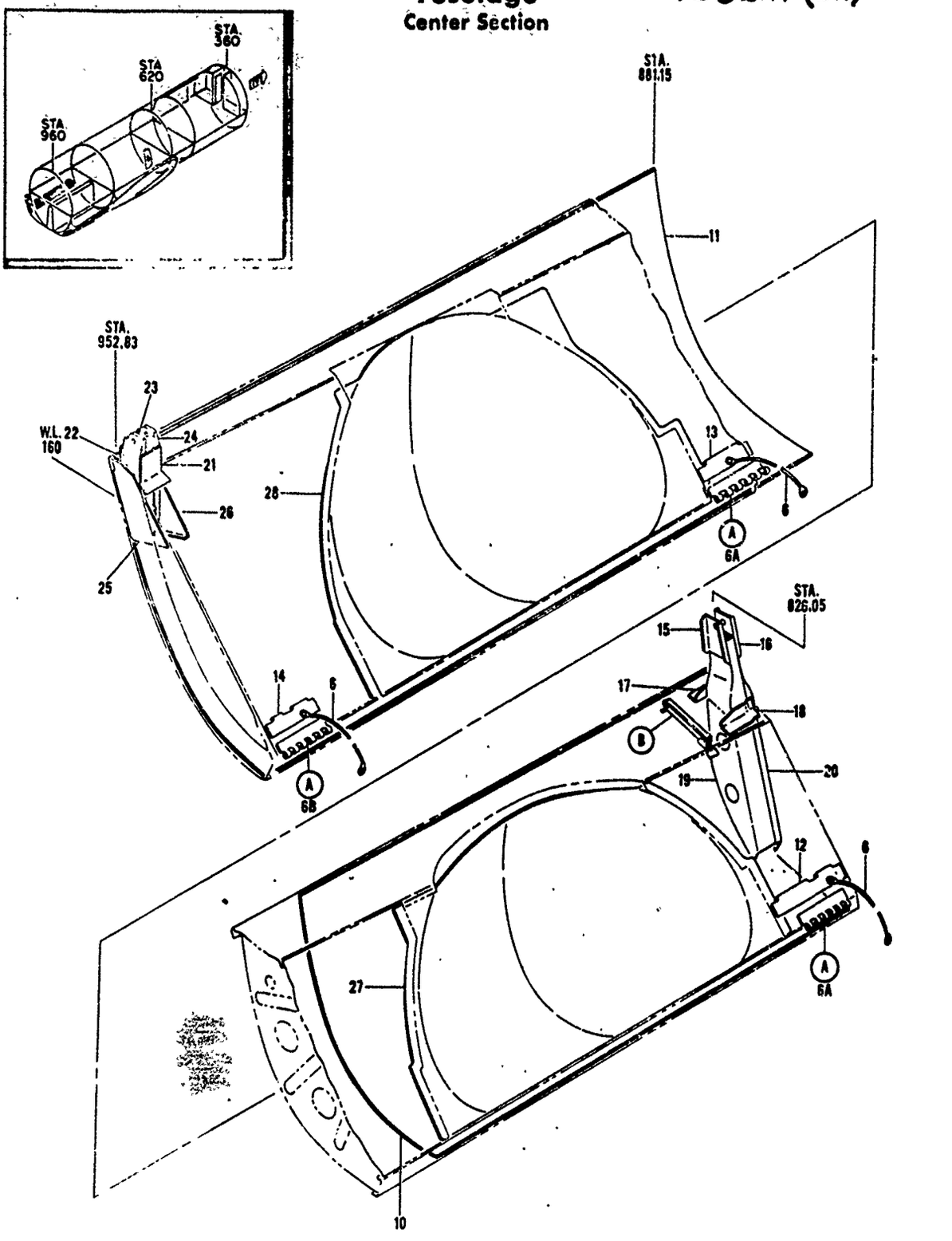


3153-677a

*Figure 675. Main Gear Outboard Door Assemblies (Sheet 1 of 2)*

# FLOW PROCESS CHART

SUBJECT MLG DOOR OUTBD DATE 4/5/89

PCN: 15119A RH 15321A LH WCD: 15119A WCDDATE: 8907

CHART BEGINS

CHART ENDS PREPARED BY: LARRY M./RICARDO B.

| | SYMBOLS | DESCRIPTION |
|---|---|---|
| 010 | ● ◇ D □ ▽ | RECEIVE/UNCRATE 2422 MBPCD |
| | ○ ◇ ◗ □ ▽ | DELAY |
| | ○ ◗ D □ ▽ | MOVE |
| | ○ ◇ ◗ □ ▽ | DELAY |
| 020 | ● ◇ D □ ▽ | WASH & STRIP 2122 MBPCA |
| | ○ ◇ ◗ □ ▽ | DELAY |
| | ○ ◗ D □ ▽ | MOVE TO 95 |
| | ○ ◇ ◗ □ ▽ | DELAY |
| 030 | ● ◇ D □ ▽ | SHAKEDOWN INSPECTION 95 MBPAB |
| | ○ ◇ ◗ □ ▽ | DELAY |
| 040 | ● ◇ D □ ▽ | DISASSEMBLE FOR REPAIR |
| 050 | ● ◇ D □ ▽ | REMOVE AFT FAIRING |
| 060 | ● ◇ D □ ▽ | REMOVE AND TREAT INTERNAL & EXTERNAL CORROSION |
| 070 | ● ◇ D □ ▽ | INSTALL IN FIXTURE P/N 590CJ1110 |
| 080 | ● ◇ D □ ▽ | REPLACE WORN HINGE ASSY |
| 090 | ● ◇ D □ ▽ | CHECK & REPAIR NUTPLATES |
| 100 | ● ◇ D □ ▽ | REPLACE BUSHINGS |
| 110 | ● ◇ D □ ▽ | REP/REP SAFETY LINK |
| 120 | ● ◇ D □ ▽ | REP/REP CHANNEL |
| 130 | ● ◇ D □ ▽ | REP/REP CHANNEL |
| [illegible] | ● ◇ D □ ▽ | REP/REP TUBE HANGER (-27) |
| [illegible] | ● ◇ D □ ▽ | REP/REP TUBE HANGER (-29) |
| 160 | ● ◇ D □ ▽ | REPLACE BAD FASTENERS |
| 170 | ● ◇ D □ ▽ | REP/REP RIBS & LONGERONS |
| 180 | ● ◇ D □ ▽ | REMOVE FOD + CLOSE OUT INSPECTION |
| 190 | ● ◇ D □ ▽ | SMOOTH SKIN PANELS |
| 200 | ● ◇ D □ ▽ | CHECK DOOR CORNERS |
| 210 | ● ◇ D □ ▽ | CHECK ALIGNMENT |
| 220 | ● ◇ D □ ▽ | CHECK SECURITY OF ATTACHMENTS |

| | SYMBOLS | DESCRIPTION |
|---|---|---|
| 230 | ● ◇ D □ ▽ | REPLACE JUMPER |
| | ○ ◇ ◗ □ ▽ | DELAY |
| | ○ ◗ D □ ▽ | MOVE TO 2280 |
| | ○ ◇ ◗ □ ▽ | DELAY |
| 240 | ● ◇ D □ ▽ | FINAL WASH + CORROSION TREAT 2280 MBPCB |
| 250 | ● ◇ D □ ▽ | PAINT INTERIOR |
| 260 | ● ◇ D □ ▽ | PAINT EXTERIOR |
| 270 | ● ◇ D □ ▽ | STENCIL |
| | ○ ◇ ◗ □ ▽ | DELAY |
| | ○ ◗ D □ ▽ | MOVE TO 95 |
| | ○ ◇ ◗ □ ▽ | DELAY |
| 280 | ● ◇ D □ ▽ | WORK COMPLETE/CONDITION TAG |
| | ○ ◇ D □ ▽ | |
| | ○ ◇ D □ ▽ | |
| | ○ ◇ D □ ▽ | |
| | ○ ◇ D □ ▽ | |
| | ○ ◇ D □ ▽ | |
| | ○ ◇ D □ ▽ | |
| | ○ ◇ D □ ▽ | |
| | ○ ◇ D □ ▽ | |
| | ○ ◇ D □ ▽ | |
| | ○ ◇ D □ ▽ | |
| | ○ ◇ D □ ▽ | |
| | ○ ◇ D □ ▽ | |
| | ○ ◇ D □ ▽ | |
| | ○ ◇ D □ ▽ | |
| | ○ ◇ D □ ▽ | |
| | ○ ◇ D □ ▽ | |
| | ○ ◇ D □ ▽ | |
| | ○ ◇ D □ ▽ | |
| | ○ ◇ D □ ▽ | |

# Fuselage
## Center Section

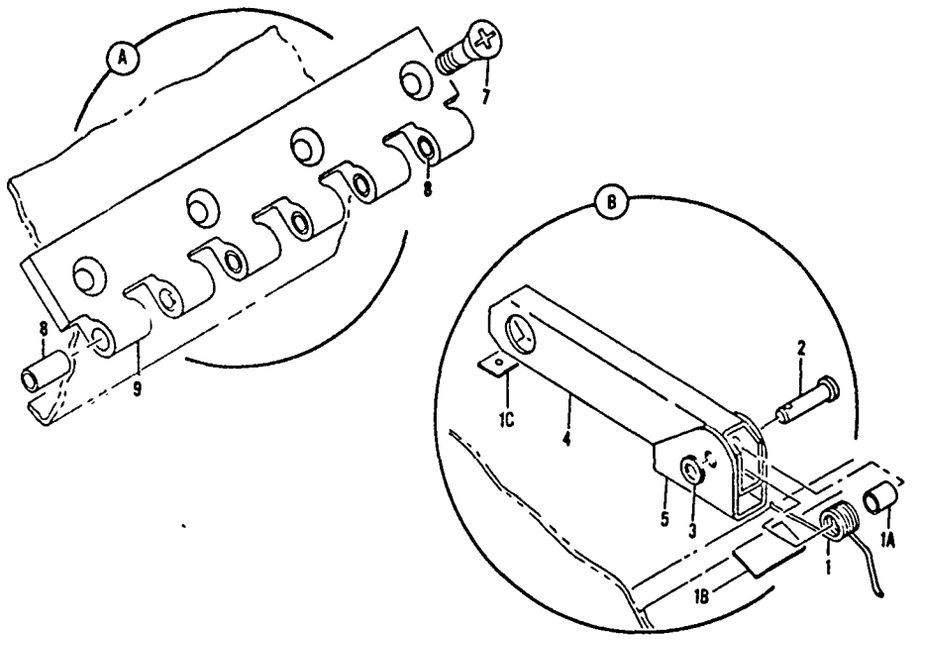


3153-677b

*Figure 675. Main Gear Outboard Door Assemblies (Sheet 2 of 2)*

| FIGURE & INDEX NO. | PART NUMBER | 1 2 3 4 5 6 7 DESCRIPTION | UNITS PER ASSY | USE ON CODE |
|---|---|---|---|---|
| 675 - | 5-86308-5 15321A | DOOR ASSY, OUTBOARD, MAIN GEAR (LH) (FOR NHA SEE FIG. 672) | REF | |
| | 5-86308-6 15119A | DOOR ASSY, OUTBOARD, MAIN GEAR (RH) (FOR NHA SEE FIG. 672) | REF | |
| 1 | 63-8412 | . SPRING, SAFETY LINK, MAIN GEAR DOOR | 1 | |
| 1A | NAS43004-24 | . SPACER | 1 | |
| 1B | 63-8411 | . STRIP, RUB, SAFETY LINK, MAIN GEAR DOOR (MAKE FROM LAM THERMOSETTING SHT COTTON FABRIC PHENOLIC RESIN MIL-P-15035 TYPE FBM 0.064 X 1.10 X 2.3) | 1 | |
| 1C | 63-8411-1 | . STRIP, RUB, SAFETY LINK, MAIN GEAR DOOR (MAKE FROM LAM THERMOSETTING SHT COTTON FABRIC PHENOLIC RESIN MIL-P-15035 TYPE FBM 0.064 X 1.00 X 1.8) | 1 | |
| 2 | AN394-23 | . PIN (FOR REPLACEMENT ORDER MS20392-3C23) | 1 | |
| 3 | AN960-416L | . WASHER | 1 | |
| 4 | 30-1572 | . LINK, SAFETY, MAIN GEAR DOOR (MAKE FROM 6800 BAC1501-684 5.80 LG) | 1 | |
| 5 | 30-1573-1 | . FITTING, SAFETY LINK, MAIN GEAR DOOR (LH ONLY) | 1 | |
| | 30-1573-2 | . FITTING, SAFETY LINK, MAIN GEAR DOOR (RH ONLY) | 1 | |
| 6 | MS25083-2886 | . JUMPER ASSY (ATTACHING PARTS) | 3 | |
| | NAS603-10 | . SCREW (FOR REPLACEMENT ORDER NAS603-10P) | 3 | |
| | BACW10P151AL | . WASHER, PLAIN | 3 | |
| | BACW10T12L | . WASHER, 5052 AL (FOR REPLACEMENT ORDER NAS1197-10L) | 3 | |
| 6A | 9-65317-1 | . HINGE HALF ASSY, OUTBOARD, MAIN GEAR DOOR | 2 | |
| 6B | 9-65317-5 | . HINGE HALF ASSY, OUTBOARD, MAIN GEAR DOOR (LH ONLY) | 1 | |
| | 9-65317-6 | . HINGE HALF ASSY, OUTBOARD, MAIN GEAR DOOR (RH ONLY) (ATTACHING PARTS) | 1 | |
| 7 | NAS517-4-7 | . SCREW (FOR REPLACEMENT ORDER BAC830LU4-7) | 12 | |
| 8 | AA397 | . . BEARING, SINTERED, PLAIN COP-TIN (90646) (ALTERNATES C250V0500 (71129) P349-32 (79039) A2505-3145-32 (00481)) (BAC810D130) | 6 | |

| FIGURE & INDEX NO. | PART NUMBER | DESCRIPTION 1 2 3 4 5 6 7 | UNITS PER ASSY | USE ON CODE |
|---|---|---|---|---|
| 675- | | | | |
| 9 | 9-65317-3 | . . HINGE HALF, OUTBOARD, MAIN GEAR DOOR (USED ON 9-65317-1) | 1 | |
| 9 | 9-65317-7 | . . HINGE HALF, OUTBOARD, MAIN GEAR DOOR (USED ON 9-65317-5) | 1 | |
| | 9-65317-8 | . . HINGE HALF, OUTBOARD, MAIN GEAR DOOR (USED ON 9-65317-6) | 1 | |
| 10 | 5-86308-15 | . PANEL, FOWARD OUTBOARD SKIN, MAIN GEAR OUTBOARD DOOR (LH ONLY) | 1 | |
| | 5-86308-16 | . PANEL, FOWARD OUTBOARD SKIN, MAIN GEAR OUTBOARD DOOR (RH ONLY) | 1 | |
| 11 | 5-86308-17 | . PANEL, AFT OUTBOARD SKIN, MAIN GEAR OUTBOARD DOOR . (LH ONLY) | 1 | |
| | 5-86308-18 | . PANEL, AFT OUTBOARD SKIN, MAIN GEAR OUTBOARD DOOR . (RH ONLY) | 1 | |
| 12 | 5-86308-53 | . GUSSET, MAIN GEAR OUTBOARD DOOR (LH ONLY) . . . . . | 1 | |
| | 5-86308-54 | . GUSSET, MAIN GEAR OUTBOARD DOOR (RH ONLY) . . . . . | 1 | |
| 13 | 5-86308-55 | . GUSSET, MAIN GEAR OUTBOARD DOOR (LH ONLY) . . . . . | 1 | |
| | 5-86308-56 | . GUSSET, MAIN GEAR OUTBOARD DOOR (RH ONLY) . . . . . | 1 | |
| 14 | 5-86308-57 | . GUSSET, MAIN GEAR OUTBOARD DOOR (LH ONLY) . . . . . | 1 | |
| | 5-86308-58 | . GUSSET, MAIN GEAR OUTBOARD DOOR (RH ONLY) . . . . . | 1 | |
| 15 | 5-86308-31 | . CHANNEL, MAIN GEAR OUTBOARD DOOR . . . . . | 1 | |
| 16 | 5-86308-32 | . CHANNEL, MAIN GEAR OUTBOARD DOOR . . . . . | 1 | |
| 17 | 60-2623-1 | . CLIP, MAIN GEAR OUTBOARD DOOR (LH ONLY) . . . . . | 1 | |
| | 60-2623-2 | . CLIP, MAIN GEAR OUTBOARD DOOR (RH ONLY) . . . . . | 1 | |
| 18 | 60-2623-3 | . CLIP, MAIN GEAR OUTBOARD DOOR (LH ONLY) . . . . . | 1 | |
| | 60-2623-4 | . CLIP, MAIN GEAR OUTBOARD DOOR (RH ONLY) . . . . . | 1 | |
| 19 | 5-86308-25 | . BRACKET, HALF, MAIN GEAR OUTBOARD DOOR (LH ONLY) . . | 1 | |
| | 5-86308-63 | . BRACKET, HALF, MAIN GEAR OUTBOARD DOOR (RH ONLY) . . | 1 | |
| 20 | 5-86308-26 | . BRACKET, HALF, MAIN GEAR OUTBOARD DOOR (LH ONLY) . . | 1 | |
| | 5-86308-64 | . BRACKET, HALF, MAIN GEAR OUTBOARD DOOR (RH ONLY) . . | 1 | |
| 21 | 60-2622-1 | . CLIP, MAIN GEAR OUTBOARD DOOR (LH ONLY) . . . . . | 1 | |
| | 60-2622-2 | . CLIP, MAIN GEAR OUTBOARD DOOR (RH ONLY) . . . . . | 1 | |
| 22 | 60-2622-3 | . CLIP, MAIN GEAR OUTBOARD DOOR(LH ONLY) . . . . . | 1 | |
| | 60-2622-4 | . CLIP, MAIN GEAR OUTBOARD DOOR (RH ONLY) . . . . . | 1 | |
| 23 | 5-86308-27 | . TUBE, HANGER BRACKET, MAIN GEAR OUTBOARD DOOR . . . (LH ONLY) | 1 | |
| | 5-86308-28 | . TUBE, HANGER BRACKET, MAIN GEAR OUTBOARD DOOR . . . (RH ONLY) | 1 | |
| 24 | 5-86308-29 | . TUBE, HANGER BRACKET, MAIN GEAR OUTBOARD DOOR . . . (LH ONLY) | 1 | |
| | 5-86308-30 | . TUBE, HANGER BRACKET, MAIN GEAR OUTBOARD DOOR . . . (RH ONLY) | 1 | |
| 25 | 5-86308-33 | . STIFFENER, MAIN GEAR OUTBOARD DOOR (LH ONLY) . . . . | 1 | |
| | 5-86308-34 | . STIFFENER, MAIN GEAR OUTBOARD DOOR (RH ONLY) . . . . | 1 | |
| 26 | 5-86308-35 | . STIFFENER, MAIN GEAR OUTBOARD DOOR (LH ONLY) . . . . | 1 | |
| | 5-86308-36 | . STIFFENER, MAIN GEAR OUTBOARD DOOR (RH ONLY) . . . . | 1 | |
| 27 | 5-97061-1 | . FAIRING, FORWARD WHEEL, MAIN LANDING GEAR OUTBOARD . DOOR (LH ONLY) | 1 | |
| | 5-97061-2 | . FAIRING, FOWARD WHEEL, MAIN LANDING GEAR OUTBOARD . DOOR (RH ONLY) | 1 | |
| 28 | 5-97061-3 | . FAIRING, AFT WHEEL, MAIN LANDING GEAR OUTBOARD DOOR (LH ONLY) | 1 | |
| | 5-97061-2 | . FAIRING, AFT WHEEL, MAIN LANDING GEAR OUTBOARD DOOR (RH ONLY) | 1 | |



15119A * WORK CONTROL DOCUMENT * MISTR 1.DATE 89073 PAGE 1 OF 3 PAGES

| 2.ORIG/PROD NR | 3.QUANTITY | 4.PROD SECTION/RCC | 5.DATE SCHED | 6.DATE COMP |
|---|---|---|---|---|
| | | MBPAB | 89093 | |

| 7.PART NUMBER | 9.ITEM SERIAL NR | 8/12.TECH DATA/OPTIONAL |
|---|---|---|
| | | REVI AUG 01-78, REV NO3 20 MAY 80. 78-1-25 |
| 10.MODEL/DESIGN/SERIES | 11.STOCK NR | WORK STATEMENT UC-1560 |
| KC-135 | | FL/78-1-25, 27 JUN 78 |
| | | IC 135(K)A-3-3, & 4 |

| 13.MISC | 14.NOUN/END ITEM NOUN |
|---|---|
| | MLG DOOR - OUTBD |

PHYLLIS NEALD/MABEBS/65265

| P/N | NSN | C/N |
|---|---|---|
| [illegible](M) | 1560003397220FL | 15119A |
| 5-86308-5(M) | 1560003404191FL | 15321A |

| 15.DISP-STATION | 16.PDN/OP NO. | 17.WORK TO BE ACCOMPLISHED | 18.MECH | 19"I" | 20"Q" |
|---|---|---|---|---|---|
| 2122 | 010 MBPCB | RECEIVE AND UNCRATE MOVE TO MBPCA | | / | / |
| 2122 | 020 MBPCA | WASH AND STRIP, MOVE TO BLDG 95 MBPAB | | / | / |
| 95 | 030 MBPAB | SHAKEDOWN INSPECTION | | / | / |
| 95 | 040 MBPAB | DISASSEMBLE AS REQUIRED TO ACCOMLISH REPAIR. | | / | / |
| 95 | 050 MBPAB | REMOVE AFT. FAIRING REQ_____NOT REQ_____ | | / | / |
| 95 | 060 MBPAB | REMOVE AND TREAT INTERNAL AND EXTERNAL CORROSION | | E | / |
| 95 | 070 MBPAB | INSTALL MLG DOOR IN JIG P/N 590CJ1110 - CHECK ALIGNMENT | | / | / |
| 95 | 080 MBPAB | RELACE WORN HINGE ASSY REQ_____NOT REQ_____ | | / | / |
| 95 | 090 MBPAB | CHECK NUT PLATES REQ_____NOT REQ_____ | | / | / |
| 95 | 100 MBPAB | REPLACE BUSHINGS REQ_____NOT REQ_____ | | / | / |
| 95 | 110 MBPAB | REPAIR OR REPLACE SAFETY LINK P/N 30-1572 REQ_____NOT REQ_____ | | / | / |
| 95 | 120 MBPAB | REPAIR OR REPLACE CHANNEL P/N 5-86308-31 REQ_____NOT REQ_____ | | / | / |
| 95 | 130 MBPAB | REPAIR OR REPLACL CHANNEL P/N 5-86308-32 REQ_____NOT REQ_____ | | / | / |

| 15.DISP-16.PDN/ STATION | OP NO. | 17.WORK TO BE ACCOMPLISHED | 18.MECH | 19"P" | 20"Q" |
|---|---|---|---|---|---|
| 95 | 140 MBPAB | REPAIR OR REPLACE TUBE HANGER BRACKET L/H 5-86308-27 R/H 5-86308-28 REQ_____NOT REQ_____ | | / | / |
| 95 | 150 MBPAB | REPAIR OR REPLACE TUBE HANGER BRACKET L/H 5-86308-29 R/H 5-86308-30 REQ_____NOT REQ_____ | | / | / |
| 95 | 160 MBPAB | REPAIR OR REPLACE LOOSE, MISSING OR DEFECTIVE FASTENERS, PINS, NUTS AND BOLTS. REQ_____NOT REQ_____ | | / | / |
| 95 | 170 MBPAB | REPAIR OR REPLACE RIBS AND LONGERONS REQ_____NOT REQ_____ | | / | |
| 95 | 180 MBPAB | REMOVE FOREIGN MATERIAL AND CLOSE OUT INSPECTION. REQ_____NOT REQ_____ | | L | / |
| 95 | 190 MBPAB | SMOOTH OUT SKIN PANELS LESS THAN 20% DAMAGE MORE THAN 20%, REPLACE SKIN REQ'D_____ NOT REQ'D_____ | Replace -12 Repair - 2hrs | L | / |
| 95 | 200 MBPAB | CHECK THAT DOOR CORNERS ARE NOT SEALED AND ARE FREE OF DIRT. | | / | / |
| 95 | 210 MBPAB | CHECK ALIGNMENT WITH MLGR DOOR IN JIG P/N 590CJ1110 | | L | / |
| 95 | 220 MBPAB | CHECK ENTIRE MLG DOOR FOR SECU- RITY OF ATTACHMENTS BEFORE REMOVAL FROM FIXTURE. | | L | / |
| 95 | 230 MBPAB | REPLACE JUMPER ASSY REQ_____NOT REQ_____ MOVE TO MBPCB | | / | / |
| 2280 | 240 MBPCB | FINAL WASH AND CORROSION TREAT REQ_____NOT REQ_____ | | / | / |
| 2280 | 250 MBPCB | PAINT INTERIOR WITH EPOXY PRIMER MIL-P-23377 AND POLYURETHANE PER MIL-C-83286 COLOR 37200 NOTE: TAPE BUSHINGS AND HINGE BUSHING | | / | / |
| 2280 | 260 MBPCB | PAINT EXTERIOR IAW TO 1C-135(K) A-3-4 SECT XI PARA 11-30 | | / | / |
| 2280 | 270 MBPCB | INSTALL ALL STENCILS IAW DRAWING 5-86308 NOTE: PARTS STOCKLISTED AS FIELD OR DEPOT MANUFACTURE, AND NON-STOCK LISTED PARTS WITHIN THE CAPABILITY OF THE REPAIR FACILITY, WILL BE LOCALLY FABRICATED TO ENABLE | | / | / |

7 people - 21 hrs - 24 hrs +12 +3

(CONTINUED)

| 15119A * WORK CONTROL DOCUMENT * MISTR 1.DATE 89073 | PAGE 3 OF 3 PAGES | | | |
|---|---|---|---|---|
| 15.DISP-16.PDN/STATION | OP NO. | 17.WORK TO BE ACCOMPLISHED | 18.MECH | 19"P" | 20"Q" |
| | | COMPLETION OF THE UNITS UNDERGOING REPAIR<br>MOVE TO 95, MABPAB | | | |
| 95 | 280 MBPAB | WORK COMPLETED, CONDITION TAG CONDITION TAGGED AFW 67-1.<br>DATE_____<br>MOVE TO CRATING<br>NOTE: PART WILL HAVE OC-ALC FORM 586, 587, OR 588 IDENTIFICATION LABELS APPLIED TO COMPLETED ITEM AFLCR 66-51 CHG. 1, PARA 2.<br>ACCEPTANCE DATE ON THE LABEL ALONG WITH "M" STAMP OF THE PERSON PERFORMING THE OVERHAUL<br>CAUTION:<br>SURFACES TO WHICH LABELS ARE APPLIED MUST BE FREE OF CONTAMINATION.<br>NOTE: COMPLETE "REMARKS" COLUMN OF AFLC FORM 1574 IAW MAOI 66-36.<br>THIS PARAGRAPH IS NOT APPLICABLE TO NON-PROGRAMMED AIRCRAFT WORKLOAD. | | / | / |
| | | COORDINATION DATE<br><br>MABSCS CONNIE WEBBER 22 MARCH 89<br><br>MAOBF TED HAYES 22 MARCH 89<br><br>MABPAB JESSIE JACOBS 22 MARCH 89<br><br>MABEBS PHYLLIS HEALD 22 MARCH 89 | | | |

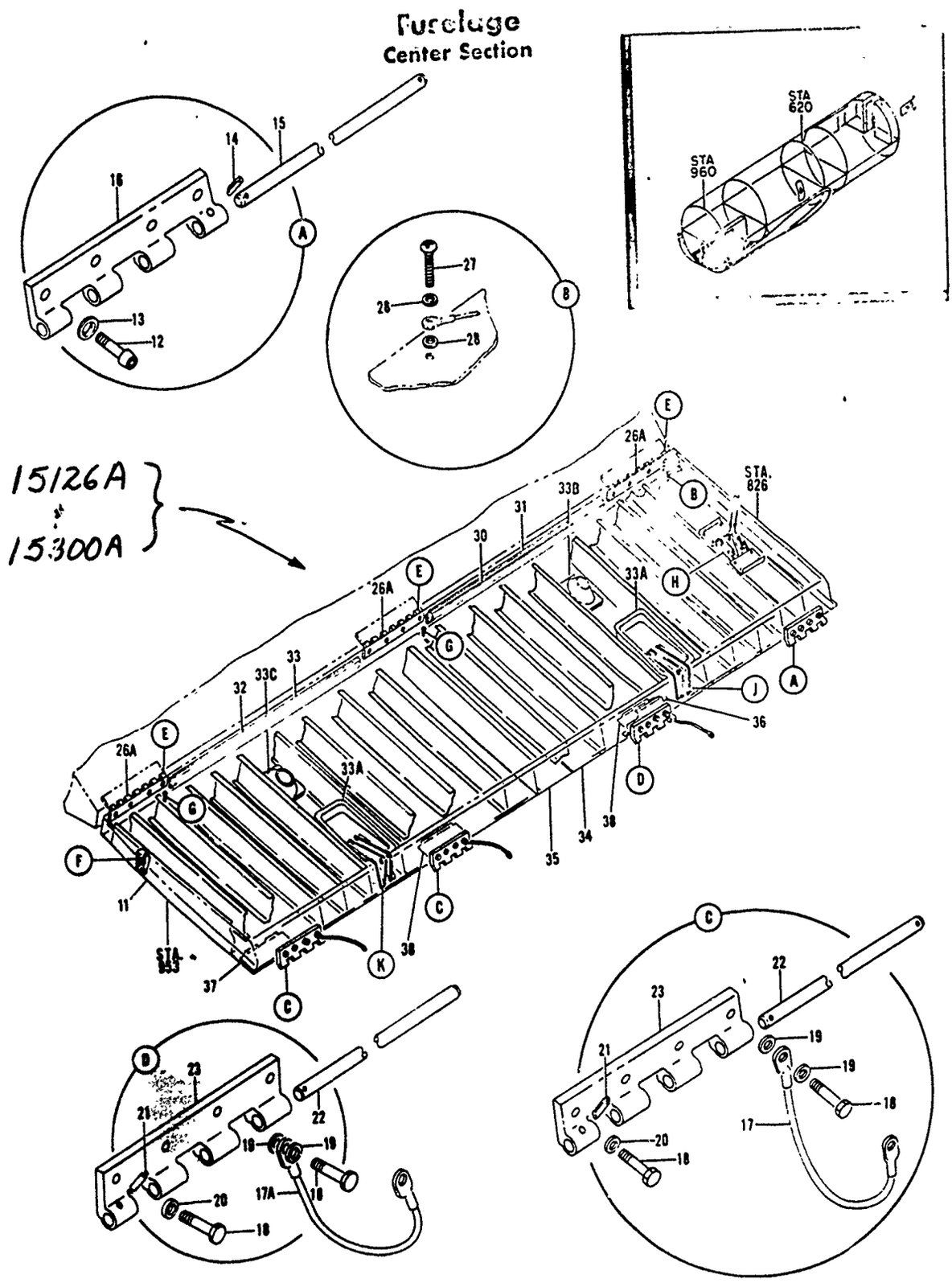


Figure 673. Main Gear Inboard Door Assemblies (Sheet 1 of 3)

# FLOW PROCESS CHART

SUBJECT: MLG Door Enbd LH or RH DATE: 4/5/89

PCN: 15126A 15300A WCD: 15126A WCDATE: 89073

CHART BEGINS: Operation 010

CHART ENDS: Operation 270 PREPARED BY: Tim Hall

| SYMBOLS | DESCRIPTION |
|---|---|
| 010 | Receive and uncrate 2122 MABPCB |
| | Delay |
| | Move to MABPCA 2122 MABPCA |
| | Delay |
| 020 | Wash and strip |
| | Delay |
| | Move to Bldg 95 95 MABPAB |
| | Delay |
| 030 | Shakedown |
| 040 | Disassemble |
| 050 | Repair or replace seals & retainers |
| 060 | Remove aft fairing |
| 070 | Treat Corrosion |
| 080 | Install MLG Door in Jig |
| 090 | Replace Worn Hinge Assembly |
| 100 | Replace Bushings |
| 110 | Replace Fitting, Energy Link |
| 120 | Repair or replace defective fasteners, nuts & bolts |
| 130 | Repair or replace ribs or longerons |
| 140 | Install pans |
| [illegible] | Remove foreign matl at closeout hinge |
| [illegible] | Smooth out skin panels or replace if 7.0% damage |
| [illegible] | Install pan -2393 |
| 180 | Install pan -2394 |
| 190 | Check alignment with MLG door |
| 200 | Inspect MLG door |
| 210 | Inspect door corners |
| 220 | Replace jumper assy |
| | Delay |

| SYMBOLS | DESCRIPTION |
|---|---|
| | Move to 2280 2280 MABPCB |
| | Delay |
| 230 | Final Wash & Corrosion Treat |
| 240 | Paint interior with epoxy primer |
| 250 | Paint exterior |
| 260 | Install all stencils |
| | Delay |
| | Move to 95 95 MABPAB |
| | Delay |
| 270 | Condition Tag |

# Fuselage
## Center Section

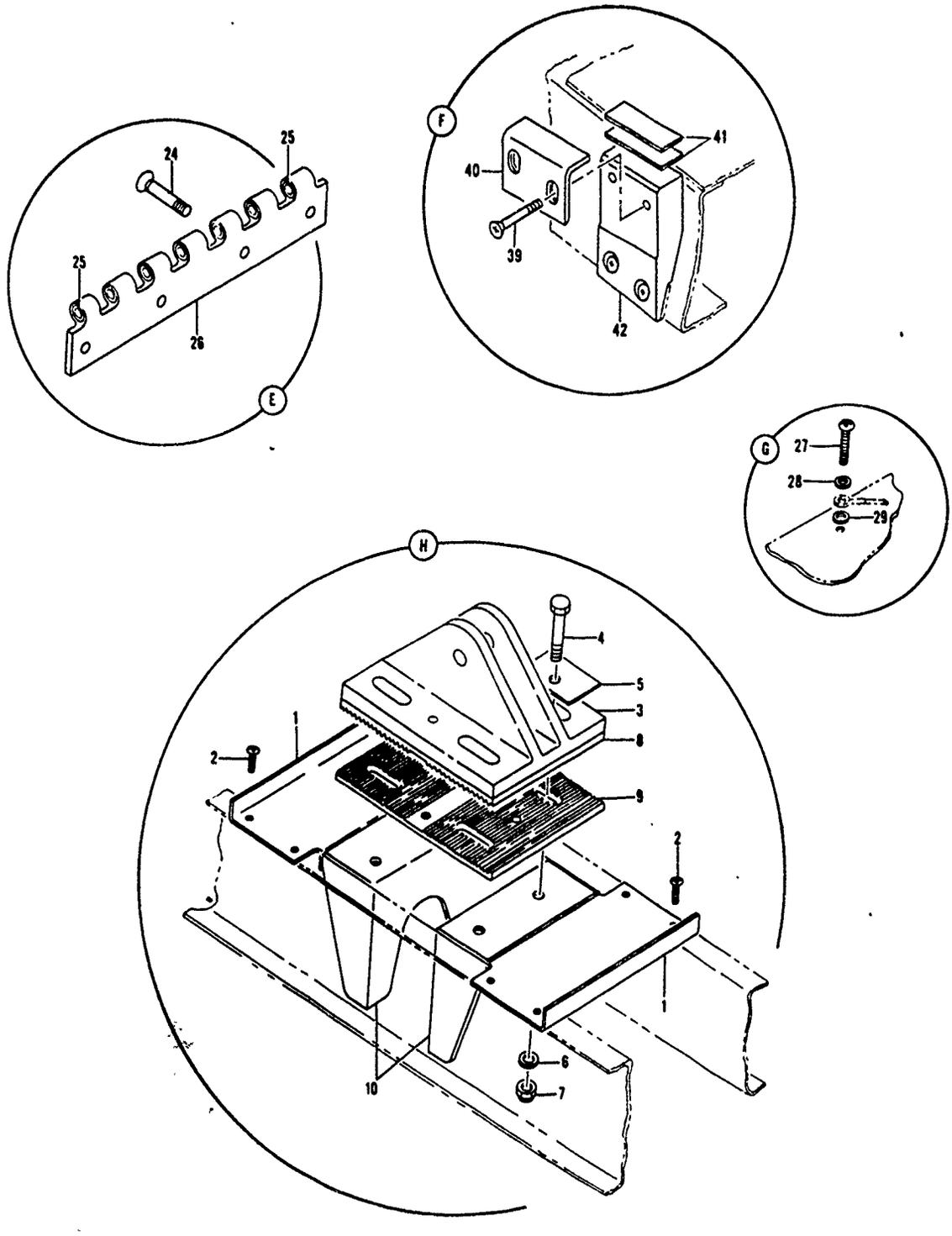


Figure 673. Main Gear Inboard Door Assemblies (Sheet 2 of 3)

# Fuselage
## Center Section

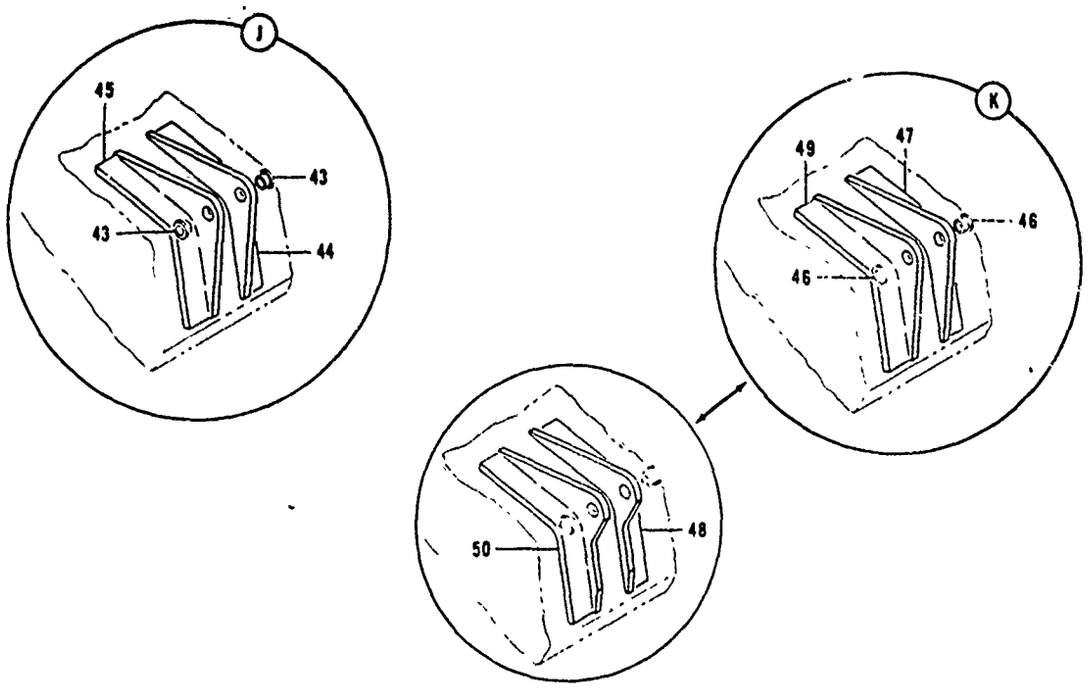


Figure 673. Main Gear Inboard Door Assemblies (Sheet 3 of 3)

| FIGURE & INDEX NO. | PART NUMBER | 1 2 3 4 5 6 7 DESCRIPTION | UNITS PER ASSY | USE ON CODE |
|---|---|---|---|---|
| 673- | | | | |
| | 5-86308-3 | DOOR ASSY, INBOARD, MAIN GEAR (ALTERNATE 5-86308-65). . . (LH) (FOR NHA SEE FIG. 672) | REF | |
| | 5-86308-4 | DOOR ASSY, INBOARD, MAIN GEAR (ALTERNATE 5-86308-66). . . (RH) (FOR NHA SEE FIG. 672) | REF | |
| | 65-26845-1 | DOOR ASSY, INBOARD, MAIN GEAR (5-86308-3149 REWORKED BY . 65-26845) (DETAIL ASSEMBLY OF 5-86308-65 ALTERNATE TO 5-86308-3) (LH) (FOR NHA SEE FIG. 672) | REF | |
| | 65-26845-2 | DOOR ASSY, INBOARD, MAIN GEAR (5-86308-3150 REWORKED BY . 65-26845) (DETAIL ASSEMBLY OF 5-86308-66 ALTERNATE TO 5-86308-4) (RH) (FOR NHA SEE FIG. 672) | REF | |
| 1 | 5-86308-23 | . PANEL, ACCESS, INBOARD DOOR, MAIN GEAR (USED ON . . . . 5-86308-3, -4) | 2 | |
| 1 | 5-86308-2023 | . PANEL, DOOR ACCESS, MAIN GEAR (USED ON 65-26845-1, -2). (ATTACHING PARTS) | 2 | |
| 2 | NAS603-8P | . SCREW (FOR REPLACEMENT ORDER NAS603-8P) . . . . . --------*-------- | 8 | |
| 3 | 9-65400-3 | . BRACKET ASSY, LINKAGE, DOOR ACTUATOR, MAIN GEAR . . . . (USED ON 5-86308-3, -4) | 1 | |
| 3 | 9-65400-3000 | . BRACKET ASSY, LINKAGE, DOOR ACTUATOR, MAIN GEAR . . . . (USED ON 65-26845-1, -2) (ATTACHING PARTS) | 1 | |
| 4 | AN6-16A | . BOLT (FOR REPLACEMENT ORDER BACB30NE6-19) . . . . . | 4 | |
| 5 | 5-86308-38 | . FILLER, RADIUS, INBOARD DOOR, MAIN GEAR (USED ON. . . . 5-86308-3, -4) | 4 | |
| 5 | 5-86308-2038 | . FILLER, RADIUS, INBOARD DOOR, MAIN GEAR (USED ON. . . . 65-26845-1, -2) | 4 | |
| 6 | AN960-616 | . WASHER. . . . . | 4 | |
| 7 | MS21042L6 | . NUT (REPLACES NAS679A6) . . . . . --------*-------- | 4 | |
| 8 | 6-83599-1 | . . PLATE, SERRATED, DOOR ACTUATOR LINKAGE, MAIN GEAR . . | 1 | |
| 9 | 6-83599 | . PLATE, SERRATED, DOOR ACTUATOR LINKAGE, MAIN GEAR . . . | 1 | |

15126A
15300A

| FIGURE & INDEX NO. | PART NUMBER | 1 2 3 4 5 6 7 DESCRIPTION | UNITS PER ASSY | USE ON CODE |
|---|---|---|---|---|
| 673- | | | | |
| 10 | 9-65343 | . FITTING, SUPPORT, DOOR DRIVE LINK ATTACHMENT, MAIN. . . GEAR (USED ON 5-86308-3, -4) | 2 | |
| 10 | 9-65343-2000 | . FITTING, SUPPORT, DOOR DRIVE LINK ATTACHMENT, MAIN. . . GEAR (USED ON 65-26845-1, -2) | 2 | |
| | | (ATTACHING PARTS) | | |
| | SALPT8-7 | . BOLT, FH SHEAR LOCK (29666) (BACB30N8-7). . . . . | 16 | |
| | SALPT8-8 | . BOLT, FH SHEAR LOCK (29666) (BACB30N8-8). . . . . | 4 | |
| | NAS528A7 | . COLLAR (FOR REPLACEMENT ORDER NAS1080C7). . . . . | 16 | |
| | NAS528A8 | . COLLAR (FOR REPLACEMENT ORDER NAS1080C8). . . . . | 4 | |
| 11 | 5-96183-1 | . RIB INSTL, INBOARD DOOR, MAIN GEAR, LH (USED ON . . . . 5-86308-3) (FOR BREAKDOWN SEE FIG. 674) | 1 | |
| | 5-96183-2 | . RIB INSTL, INBOARD DOOR, MAIN GEAR, RH (USED ON . . . . 5-86308-4) (FOR BREAKDOWN SEE FIG. 674) | 1 | |
| | 9-65127-3 | . HINGE-HALF ASSY, DOOR INBOARD, MAIN GEAR (USED ON . . . 5-86308-3) | 1 | |
| | 9-65127-4 | . HINGE-HALF ASSY, DOOR INBOARD, MAIN GEAR (USED ON . . . 5-86308-4) | 1 | |
| | 9-65127-3003 | . HINGE-HALF ASSY, DOOR INBOARD, MAIN GEAR (USED ON . . . 65-26845-1) | 1 | |
| | 9-65127-3004 | . HINGE-HALF ASSY, DOOR INBOARD, MAIN GEAR (USED ON . . . 65-26845-2) | 1 | |
| | | (ATTACHING PARTS) | | |
| 12 | MS20005-13 | . BOLT. . . . . | 4 | |
| 13 | MS20002C5 | . WASHER. . . . . | 4 | |
| 14 | NAS561P3-12 | . . PIN . . . . . | 1 | |
| 15 | 9-65127-8 | . . PIN, HALF HINGE, DOOR INBOARD, MAIN GEAR (USED ON . . 9-65127-3, -4) | 1 | |
| 15 | 9-65127-2008 | . . PIN, HALF HINGE, DOOR INBOARD, MAIN GEAR (USED ON . . 9-65127-3003, -3004) | 1 | |
| 16 | 9-65127-7 | . . HINGE-HALF, DOOR INBOARD, MAIN GEAR (USED ON. . . . . 9-65127-3, -4) | 1 | |
| 16 | 9-65127-2007 | . . HINGE-HALF, DOOR INBOARD, MAIN GEAR (USED ON. . . . . 9-65127-3003, -3004) | 1 | |
| 17 | MS25083-2CC4 | . JUMPER ASSY . . . . . | 2 | |
| 17A | MS25083-2BC4 | . JUMPER ASSY . . . . . | 1 | |
| | 9-65125 | . HINGE-HALF ASSY, DOOR INBOARD, MAIN GEAR (FOR I/W . . . INFO SEE 9-65125-5) (USED ON 5-86308-3 AND -4) | 3 | B |
| | 9-65125-5 | . HINGE-HALF ASSY, DOOR INBOARD, MAIN GEAR (I/W . . . . . 9-65125-5) (USE 9-65125-1 UNTIL EXHAUSTED) (USED ON 5-86308-3 AND -4) | 3 | A |
| | 9-65125-2000 | . HINGE-HALF ASSY, DOOR INBOARD, MAIN GEAR (USED ON . . . 65-26845-1 AND -2) | 3 | |
| | | (ATTACHING PARTS) | | |
| 18 | AN4-10A | . BOLT (FOR REPLACEMENT ORDER BACB30NE4-9). . . . . | 12 | |
| 19 | BACW10P142AL | . WASHER. . . . . | 6 | |
| 20 | AN960D416 | . WASHER. . . . . | 9 | |
| 21 | 52-022-094-0812 | . . PIN, SPG (72962) (ALTERNATE 23S094-0812 (56878) . . . 094-0812HBS (00287)) (BACP18L6P0812) | 1 | |
| 22 | 9-65125-4 | . . PIN, HALF HINGE, DOOR INBOARD, MAIN GEAR (USED ON . . 9-65125-5) | 1 | B |
| 22 | 9-65125-4 | . . PIN, HALF HINGE, DOOR INBOARD, MAIN GEAR (USED ON . . 9-65125-2000) | 1 | |
| 22 | 9-65125-6 | . . PIN, HALF HINGE, DOOR INBOARD, MAIN GEAR (USED ON . . 9-65125-5) | 1 | A |
| 23 | 9-65125-2 | . . HINGE-HALF, DOOR INBOARD, MAIN GEAR (USED ON. . . . . 9-65125-5, -5) | 1 | |
| 23 | 9-65125-2002 | . . HINGE-HALF, DOOR INBOARD, MAIN GEAR (USED ON. . . . . 9-65125-2000) | 1 | |
| | 9-35317 | . HINGE-HALF ASSY, DOOR OUTBOARD, MAIN GEAR (USED ON. . . 5-86308-3, -4) | 3 | |
| | | (ATTACHING PARTS) | | |
| 24 | NAS517-4-7 | . SCREW (FOR REPLACEMENT ORDER 3ACB30LU4-7) . . . . . | 12 | |
| 25 | AA397 | . . BEARING, PLAIN (COPPER-TIN SINTERED) (70417). . . . . (ALTERNATES C250V0500 (71129) P349-32 (79039) A2503145-32 (00481)) (BACB10D130) | 7 | |
| 26 | 9-65317-2 | . . HINGE-HALF, DOOR OUTBOARD, MAIN GEAR. . . . . | 1 | |
| 26A | 9-65317-3000 | . HINGE-HALF ASSY, DOOR OUTBOARD, MAIN GEAR (USED ON. . . 65-26845-1, -2) | 3 | |
| | | (ATTACHING PARTS) | | |
| | NAS517-4-7 | . SCREW (FOR REPLACEMENT ORDER BACB30LU4-7) . . . . . | 12 | |
| 27 | NAS603-7 | . SCREW (FOR REPLACEMENT ORDER NAS603-7P) (USED ON. . . . 5-86308-3, -4) | 3 | |

| FIGURE & INDEX NO. | PART NUMBER | 1 2 3 4 5 6 7 DESCRIPTION | UNITS PER ASSY | USE ON CODE |
|---|---|---|---|---|
| 673- | | | | |
| 27 | AN520-10R7 | . SCREW (FOR REPLACEMENT ORDER NAS603-7P) (USED ON. . . . 65-26845-1, -2) | 3 | |
| 28 | BACW10P151AL | . WASHER, PLAIN . . . . . | 4 | |
| 29 | BACW10T10L | . WASHER, 5052 AL (FOR REPLACEMENT ORDER NAS1197-10L) . . | 2 | |
| | 5-86308-39 | . SEAL ASSY, FORWARD, MAIN GEAR DOOR, LH (LH ONLY) (FOR . REPLACEMENT USE BAC1521-274 AND 5-86308-43) | 1 | |
| | 5-86308-40 | . SEAL ASSY, FORWARD, MAIN GEAR DOOR, RH (RH ONLY) (FOR . REPLACEMENT USE BAC1521-274 AND 5-86308-44) (ATTACHING PARTS) | 1 | |
| | NAS603-8 | . SCREW (FOR REPLACEMENT ORDER NAS603-8P) . . . . . --------*-------- | 12 | |
| 30 | 5-86308-41 | . . SEAL RUBBER, DOOR FORWARD, MAIN GEAR (MAKE FROM . . . BAC1521-274 X 53.6) (LH ONLY) | 1 | |
| | 5-86308-42 | . . SEAL, RUBBER, DOOR FORWARD, MAIN GEAR (MAKE FROM. . . BAC1521-274 X 53.6) (RH ONLY) | 1 | |
| 31 | 5-86308-43 | . . RETAINER, SEAL, DOOR FORWARD, MAIN GEAR (MAKE FROM. . BAC1492-169 X 60) (LH ONLY) | 1 | |
| | 5-86308-44 | . . RETAINER, SEAL, DOOR FORWARD, MAIN GEAR (MAKE FROM. . BAC1492-169 X 60) (RH ONLY) | 1 | |
| | 5-86308-45 | . SEAL ASSY, DOOR AFT, MAIN GEAR, LH (LH ONLY). . . . . | 1 | |
| | 5-86308-46 | . SEAL ASSY, DOOR AFT, MAIN GEAR, RH (RH ONLY). . . . . (ATTACHING PARTS) | 1 | |
| | NAS603-8 | . SCREW (FOR REPLACEMENT ORDER NAS603-8P) . . . . . --------*-------- | 12 | |
| 32 | 5-86308-47 | . . SEAL, RUBBER, DOOR AFT, MAIN GEAR (MAKE FROM. . . . . BAC1521-274 X 50.8) (LH ONLY) | 1 | |
| | 5-86308-48 | . . SEAL, RUBBER, DOOR AFT, MAIN GEAR (MAKE FROM. . . . . BAC1521-274 X 50.8) (RH ONLY) | 1 | |
| 33 | 5-86308-49 | . . RETAINER, SEAL, DOOR AFT, MAIN GEAR (LH ONLY) . . . . | 1 | |
| | 5-86308-50 | . . RETAINER, SEAL, DOOR AFT, MAIN GEAR (RH ONLY) . . . . | 1 | |
| 33A | 9-67575 | . PAN, BAR, DOOR SAFETY, MAIN LANDING GEAR (USED ON . . . 5-86308-3, -4) | 2 | |
| 33A | 69-9342 | . PAN, BAR, DOOR SAFETY, MAIN LANDING GEAR (USED ON . . . 65-26845-1, -2) | 2 | |
| 33B | 90-2394 | . PAN, CLEARANCE, DOOR AXLE, MAIN GEAR. . . . . | 1 | |
| 33C | 90-2393 | . PAN, CLEARANCE, DOOR AXLE, MAIN GEAR. . . . . | 1 | |
| 34 | 5-86308-9 | . SKIN, OUTBOARD PANEL, INBOARD DOOR, MAIN GEAR . . . . . (USED ON 5-86308-3) | 1 | |
| | 5-86308-10 | . SKIN, PANEL, FORWARD OUTBOARD, INBOARD DOOR, MAIN . . . GEAR (USED ON 5-86308-4) | 1 | |
| 34 | 5-86308-3139 | . SKIN, FORWARD PANEL, INBOARD DOOR, MAIN GEAR (USED ON . 65-26845-1) | 1 | |
| | 5-86308-3140 | . SKIN, FORWARD PANEL, INBOARD DOOR, MAIN GEAR (USED ON . 65-26845-2) | 1 | |
| 35 | 5-86308-11 | . SKIN, OUTBOARD PANEL, INBOARD DOOR AFT, MAIN GEAR . . . (USED ON 5-86308-3) | 1 | |
| | 5-86308-12 | . SKIN, OUTBOARD PANEL, INBOARD DOOR AFT, MAIN GEAR . . . (USED ON 5-86308-4) | 1 | |
| 35 | 5-86308-3119 | . SKIN, OUTBOARD PANEL, INBOARD DOOR AFT, MAIN GEAR . . . (USED ON 65-26845-1) | 1 | |
| | 5-86308-3120 | . SKIN, OUTBOARD PANEL, INBOARD DOOR AFT, MAIN GEAR . . . (USED ON 65-26845-2) | 1 | |
| 36 | 30-2222-1 | . CLIP, CHANNEL, INBOARD DOOR, MAIN GEAR (USED ON . . . . 5-86308-3) | 1 | |
| | 30-2222-2 | . CLIP, CHANNEL, INBOARD DOOR, MAIN GEAR (USED ON . . . . 5-86308-4) | 1 | |
| 36 | 30-2222-2001 | . CLIP, CHANNEL, INBOARD DOOR, MAIN GEAR (USED ON . . . . 65-26845-1) | 1 | |
| | 30-2222-2002 | . CLIP, CHANNEL, INBOARD DOOR, MAIN GEAR (USED ON . . . . 65-26845-2) | 1 | |
| 37 | 5-86308-59 | . GUSSET, INBOARD DOOR, MAIN GEAR (USED ON 5-86308-3) . . | 1 | |
| | 5-86308-60 | . GUSSET, INBOARD DOOR, MAIN GEAR (USED ON 5-86308-4) . . | 1 | |
| 37 | 5-86308-2059 | . GUSSET, INBOARD DOOR, MAIN GEAR (USED ON 65-26845-1). . | 1 | |
| | 5-86308-2060 | . GUSSET, INBOARD DOOR, MAIN GEAR (USED ON 65-26845-2). . | 1 | |
| 38 | 5-86308-61 | . GUSSET, INBOARD DOOR, MAIN GEAR (USED ON 5-86308-3) . . | 2 | |
| | 5-86308-62 | . GUSSET, INBOARD DOOR, MAIN GEAR (USED ON 5-86308-4) . . | 2 | |
| 38 | 5-86308-2061 | . GUSSET, INBOARD DOOR, MAIN GEAR (USED ON 65-26845-1). . | 2 | |
| | 5-86308-2062 | . GUSSET, INBOARD DOOR, MAIN GEAR (USED ON 65-26845-2). . | 2 | |
| 39 | NAS517-3-17 | . SCREW (FOR REPLACEMENT ORDER BACB30LU3-17) (USED ON . . 65-26845-1, -2) | 2 | |
| 40 | 63-1985-2001 | . ANGLE, STOP, MAIN GEAR DOOR (USED ON 65-26845-1). . . . | 1 | |
| | 63-1985-2002 | . ANGLE, STOP, MAIN GEAR DOOR (USED ON 65-26845-2). . . . | 1 | |
| 41 | BACS40C9-27 | . SHIM, LAM, 0.093 THK. . . . . | 2 | |
| 42 | 66-3668-3001 | . BLOCK, DOOR STOP, MAIN GEAR DOOR (USED ON 65-26845-1) . | 1 | |
| | 66-3668-3002 | . BLOCK, DOOR STOP, MAIN GEAR DOOR (USED ON 65-26845-2) . (ATTACHING PARTS) | 1 | |
| | NAS517-3-5 | . SCREW (FOR REPLACEMENT ORDER BACB30LU3-5) . . . . . | 2 | |

| FIGURE & INDEX NO. | PART NUMBER | 1 2 3 4 5 6 7 DESCRIPTION | UNITS PER ASSY | USE ON CODE |
|---|---|---|---|---|
| 673- | | | | |
| | 65-26845-3 | . FILLER, INBOARD DOOR, MAIN GEAR . . . . . | 1 | |
| | 5-96183-2275 | . FILLER, INBOARD DOOR, MAIN GEAR . . . . . | 1 | |
| | | --------*-------- | | |
| | 9-67006-3 | . FITTING ASSY, EMERGENCY LINK, MAIN LANDING GEAR DOOR. . (LH ONLY) (REPLACE WITH 9-67006-11) | 1 | |
| | 9-67006-4 | . FITTING ASSY, EMERGENCY LINK, MAIN LANDING GEAR DOOR. . (RH ONLY) (REPLACE WITH 9-67006-12) | 1 | |
| 43 | NAS77A6-25P | . . BUSHING . . . . . | 1 | |
| 44 | 9-67006-7 | . . FITTING, EMERGENCY LINK, MAIN LANDING GEAR DOOR . . . (USED ON 9-67006-3) | 1 | |
| 45 | 9-67006-8 | . . FITTING, EMERGENCY LINK, MAIN LANDING GEAR DOOR . . . (USED ON 9-67006-4) | 1 | |
| | 9-67006-3 | . FITTING ASSY, EMERGENCY LINK, MAIN LANDING GEAR DOOR. . (USED ON 5-86308-3) | 1 | |
| | 9-67006-12 | . FITTING ASSY, EMERGENCY LINK, MAIN LANDING GEAR DOOR. . (SUITABLE SUB. FOR 9-67006-2) (USED ON 5-86308-4) | 1 | |
| | 9-67006-3002 | . FITTING ASSY, EMERGENCY LINK, MAIN LANDING GEAR DOOR. . (REWORKED BY 65-26845) (USED ON 5-86308-66) | 1 | |
| | 9-67006-4 | . FITTING ASSY, EMERGENCY LINK, MAIN LANDING GEAR DOOR. . (USED ON 5-86308-3) | 1 | |
| | 9-67006-11 | . FITTING ASSY, EMERGENCY LINK, MAIN LANDING GEAR DOOR. . (SUITABLE SUB. FOR 9-67006-1) (USED ON 5-86308-4) | 1 | |
| | 9-67006-3001 | . FITTING ASSY, EMERGENCY LINK, MAIN LANDING GEAR DOOR. . (REWORKED BY 65-26845) (USED ON 5-86308-66) | 1 | |
| 46 | NAS77A6-25P | . . BUSHING . . . . . | 1 | |
| 47 | 9-67006-7 | . . FITTING, EMERGENCY LINK, MAIN LANDING GEAR DOOR . . . (USED ON 9-67006-3) | 1 | |
| | 9-67006-10 | . . FITTING, EMERGENCY LINK, MAIN LANDING GEAR DOOR . . . (USED ON 9-67006-12) | 1 | |
| 48 | 9-67006-2006 | . . FITTING, EMERGENCY LINK, MAIN LANDING GEAR DOOR . . . (USED ON 9-67006-3002) | 1 | |
| 49 | 9-67006-8 | . . FITTING, EMERGENCY LINK, MAIN LANDING GEAR DOOR . . . (USED ON 9-67006-4) | 1 | |
| | 9-67006-9 | . . FITTING, EMERGENCY LINK, MAIN LANDING GEAR DOOR . . . (USED ON 9-67006-11) | 1 | |
| 50 | 9-67006-2005 | . . FITTING, EMERGENCY LINK, MAIN LANDING GEAR DOOR . . . (USED ON 9 67006-3001) | 1 | |
| | | A 2201 THRU 2299<br>B 3001 THRU 3099 | | |

| 15126A * WORK CONTROL DOCUMENT * | 1.DATE 89073 | PAGE 1 OF 3 PAGES |
|---|---|---|

| 2.ORIG/PROD NR | 3.QUANTITY | 4.PROD SECTION/RCC | 5.DATE SCHED | 6.DATE COMP |
|---|---|---|---|---|
| | | MABPAB | 89093 | |

| 7.PART NUMBER | 9.ITEM SERIAL NR | 10/12.TECH DATA/OPTIONAL |
|---|---|---|
| | | 1. WORK STATEMENT |
| | | DC-156OFL/78-1-25 |
| 10.MODEL/DESIGN/SERIES | 11.STOCK NR | 2. 27 JUNE 78, 78 1-25 |
| RC 135 | | 1C-135(K)A-3-3, & 4 |
| | | 3. REV NO3 20 MAY 80 |
| 13.MISC | 14.NOUN/END ITEM NOUN | |
| | DOOR MLG INBD LH OR RH | |
| | PHYLLIS HLALD/MABEBS/65765 | |

| P/N | NSN | C/N |
|---|---|---|
| 5-86308-3 | 1560003409215FL | 15126A |
| 5-86308-4 | 1560003409216FL | 15300A |

| 15.DISP STATION | 16.PDN/OP NO. | 17.WORK TO BE ACCOMPLISHED | 18.MI | CHT 19"P" | 20"Q" |
|---|---|---|---|---|---|
| 2122 | 010 MBPCD | RECEIVE AND UNCRATE<br>MOVE TO MBPCA | | / | / |
| 2122 | 020 MBPCA | WASH AND STRIP<br>MOVE TO BLDG 95 | | / | / |
| 95 | 030 MBPAB | SHAKEDOWN INSPECTION | | / | / |
| 95 | 040 MBPAB | DISASSEMBLE AS REQUIRED TO ACCOMPLISH REPAIR. | | / | / |
| 95 | 050 MBPAB | REPAIR OR REPLACE SEALS & RETAINERS<br>REQ'D---------- NOT REQ'D---------- | | L | / |
| 95 | 060 MBPAB | REMOVE AFT FAIRING<br>REQ'D_____ NOT REQ'D_____ | | / | / |
| 95 | 070 MBPAB | REMOVE AND TREAT INTERNAL AND EXTERNAL CORROSION.<br>REQ'D_____ NOT REQ'D_____ | | / | / |
| 95 | 080 MBPAB | INSTALL MLG DOOR IN JIG P/N 590CJ1100 - CHECK ALIGNMENT | | / | / |
| 95 | 090 MBPAB | REPLACE WORN HINGE ASSY<br>REQ'D_____ NOT REQ'D_____ | | / | / |
| 95 | 100 MBPAB | REPLACE BUSHINGS<br>REQ'D_____ NOT REQ'D_____ | | / | / |
| 95 | 110 MBPAB | REPLACE FITTINGS, EMERGENCY LINK.<br>REQ'D_____ NOT REQ'D_____ | | / | / |
| 95 | 120 MBPAB | REPAIR OR REPLACE LOOSE, MISSING, OR DEFECTIVE FASTENERS, NUTS & BOLTS<br>REQ'D_____ NOT REQ'D_____ | | E | / |
| 95 | 130 MBPAB | REPAIR OR REPLACE RIBS OR LONGERONS<br>REQ'D_____ NOT REQ'D_____ | | E | / |

| 1S126A * WORK CONTROL DOCUMENT * | 1.DATE 89073 | PAGE 2 OF 3 PAGES |
|---|---|---|

| 15.DISP-16.PDN/ STATION | OP NO. | 17.WORK TO BE ACCOMPLISHED | 18.MECH | 19"P" | 20"Q" |
|---|---|---|---|---|---|
| 95 | 140 MBPAB | INSTALL PANS P/N 9 675/5<br>REQ'D_____ NOT REQ'D_____<br>NOTE: COMPLETE "REMARK" COLUMN OF AFLC FORM 1574 IAW NAO1 66-36. THIS PARAGRAPH IS NOT APPLICABLE TO NON-PROGRAMMED AIRCRAFT WORKLOAD. | | E | / |
| 95 | 150 MBPAB | REMOVE FOREIGN MATERIAL & CLOSE-OUT INSPECTION.<br>REQ'D_____ NOT REQ'D_____ | | L | / |
| 95 | 160 MBPAB | SMOOTH OUT SKIN PANELS LESS THAN 20% DAMAGE. DAMAGE MORE THAN 20% REPLACE SKIN PANEL.<br>REQ'D_____ NOT REQ'D_____ | | E | / |
| 95 | 170 MBPAB | INSTALL PAN, CLEARANCE P/N 90-2393<br>REQ'D_____ NOT REQ'D_____ | | / | / |
| 95 | 180 MBPAB | INSTALL PAN, CLEARANCE P/N 90-2394<br>REQ'D_____ NOT REQ'D_____ | | / | / |
| 95 | 190 MBPAB | CHECK ALIGNMENT WITH MLG DOOR IN JIG. P/N 590CJ3100. | | E | / |
| 95 | 200 MBPAB | CHECK ENTIRE MLG DOOR FOR SECURITY OF ATTACHMENTS, BEFORE REMOVAL OF FIXTURE. | | E | / |
| 95 | 210 MBPAB | CHECK THAT DOOR CORNERS ARE NOT SEALED AND ARE FREE OF DIRT. | | / | / |
| 95 | 220 MBPAB | REPLACE JUMPER ASSY.<br>MOVE TO BLDG. 2280, MBPCB | | / | / |
| 2280 | 230 MBPCB | FINAL WASH AND CORROSION TREAT<br>REQ'D_____ NOT REQ'D_____ | | / | / |
| 2280 | 240 MBPCB | PAINT INTERIOR WITH EPOXY PRIMER MIL-P-23377 AND POLYURETHANE PER MIL-C-83286 COLOR 37200<br>NOTE: TAPE BUSHINGS AND HINGE BUSHINGS. | | / | / |
| 2280 | 250 MBPCB | PAINT EXTERIOR IAW T.O. 1C-135(K) A-3-4 SEC XI, PARA 11-30 | | / | / |
| 2280 | 260 MBPCB | INSTALL ALL STENCILS IAW DWG 5-86308 NOTE: PARTS STOCKLISTED AS FIELD OR DEPOT MANUFACTURE AND NON-STOCKLISTED PARTS WITHIN THE CAPABILITY OF THE REPAIR FACILITY, WILL BE LOCALLY FABRICATED TO ENABLE COMPLETION OF THE UNITS UNDERGOING REPAIR.<br>MOVE TO 95, MADPAB | | / | / |

| 15126A * WORK CONTROL DOCUMENT * | 1.DATE 89073 | PAGE 3 OF 3 PAGES |
|---|---|---|

| 15.DISP-16.PDN/STATION | OP NO. | 17.WORK TO BE ACCOMPLISHED | 18.MECH | 19"P" | 20"Q" |
|---|---|---|---|---|---|
| 95 | 270 MBPAB | WORK COMPLETED, CONDITION TAGGED IAW AFM-67-1.<br>DATE_____ MOVE TO CRATING.<br>NOTE: PART WILL HAVE OC-ALC FORM 586 587 OR 588 IDENTIFICATION LABELS APPLIED TO COMPLETED ITEM IAW AFLCR 66-51 CHG. 1. PARA 2.<br>ACCEPTANCE DATE ON THE LABEL LONG WITH "A" STAMP OF THE PERSON PERFORMING THE OVERHAUL.<br>CAUTION: GUN ACCS TO WHICH LABELS ARE APPLIED MUST BE FREE OF CONTAMINATION.<br>NOTE: COMPLETE "REMARK" COLUMN OF AFLC FORM 1574 IAW MAOI 66-36. THIS PARAGRAPH IS NOT APPLICABLE TO NON-PROGRAMMED AIRCRAFT WORKLOAD. | / | E | / |
| | | COORDINATION: DATE:<br><br>MABSCS CONNIE WEBBER 22 MARCH 89<br><br>MAQDF TED HAYES 22 MARCH 89<br><br>MABPAB JESSIE JACOBS 22 MARCH 89<br><br>MABEBS PHYLLIS HEALD 22 MARCH 89 | | | |

| FIGURE & INDEX NO. | PART NUMBER | DESCRIPTION 1 2 3 4 5 6 7 | UNITS PER ASSY | USE ON CODE |
|---|---|---|---|---|
| 36 - | | | | |
| | 5-86072-167 | AILERON AND TAB ASSY, INBOARD (LH) (FOR NHA SEE FIG. 35) | REF | |
| | 5-86072-168 | AILERON AND TAB ASSY, INBOARD (RH) (FOR NHA SEE FIG. 35) | REF | |
| | 5-86072-169 | . AILERON ASSY, INBOARD (LH ONLY) | 1 | |
| | 5-86072-170 | . AILERON ASSY, INBOARD (RH ONLY) | 1 | |
| 1 | 4-5205-1 | . . PANEL ASSY, UPPER, SKIN, INBOARD AILERON (ALTERED FROM 4-5205) (LH ONLY) | 1 | |
| | 4-5205-2 | . . PANEL ASSY, UPPER, SKIN, INBOARD AILERON (ALTERED FROM 4-5205) (RH ONLY) | 1 | |
| 2 | 4-5205-3 | . . PANEL ASSY, LOWER, SKIN, INBOARD AILERON (ALTERED FROM 4-5205) (REWORKED BY 65-13097-1) (LH ONLY) | 1 | |
| | 4-5205-4 | . . PANEL ASSY, LOWER, SKIN, INBOARD AILERON (ALTERED FROM 4-5205) (REWORKED BY 65-13097-2) (RH ONLY) | 1 | |
| | | (ATTACHING PARTS) | | |
| | NAS517-3-3 | . . SCREW | 15 | |
| | NAS517-3-4 | . . SCREW | 70 | |
| | NAS517-3-5 | . . SCREW | 26 | |
| | NAS517-3-6 | . . SCREW | 4 | |
| | NAS517-3-7 | . . SCREW | 2 | |
| | NAS517-3-8 | . . SCREW | 2 | |
| | NAS221-14 | . . SCREW | 4 | |
| 3 | 5-86072-145 | . . PANEL ASSY, ACCESS, INBOARD AILERON (LH ONLY) | 1 | |
| | 5-86072-146 | . . PANEL ASSY, ACCESS, INBOARD AILERON (RH ONLY) | 1 | |
| | | (ATTACHING PARTS) | | |
| | NAS517-3-3 | . . SCREW | 7 | |
| | NAS517-3-6 | . . SCREW | 1 | |
| 3A | 5-86072-71 | . . CHORD, RIB, LOWER, INBOARD AILERON | 1 | |
| 3B | 5-86072-73 | . . CHORD, RIB, UPPER, INBOARD AILERON | 1 | |
| 3C | 5-86072-107 | . . WEB ASSY, BONDED, INBOARD AILERON (LH ONLY) | 1 | |
| | 5-86072-108 | . . WEB ASSY, BONDED, INBOARD AILERON (RH ONLY) | 1 | |
| 3D | 5-86072-93 | . . CHORD, RIB, LOWER, INBOARD AILERON (LH ONLY) | 1 | |
| | 5-86072-94 | . . CHORD, RIB, LOWER, INBOARD AILERON (RH ONLY) | 1 | |
| 3E | 5-86072-91 | . . CHORD, RIB, UPPER, INBOARD AILERON (LH ONLY) | 1 | |
| | 5-86072-92 | . . CHORD, RIB, UPPER, INBOARD AILERON (RH ONLY) | 1 | |
| 3F | 5-86072-109 | . . WEB ASSY, BONDED, INBOARD AILERON (LH ONLY) | 1 | |
| | 5-86072-110 | . . WEB ASSY, BONDED, INBOARD AILERON (RH ONLY) | 1 | |
| 3G | 69-5854-1 | . . RIB ASSY, NO. 7, INBOARD AILERON (LH ONLY) | 1 | |
| | 69-5854-2 | . . RIB ASSY, NO. 7, INBOARD AILERON (RH ONLY) | 1 | |
| 3H | 6-73856-1 | . . RIB, NOSE, INBOARD AILERON (LH ONLY) | 1 | |
| | 6-73856-2 | . . RIB, NOSE, INBOARD AILERON (RH ONLY) | 1 | |
| | 65-7273-1 | . . FITTING ASSY, SUPPORT, OUTBOARD TAB HINGE, INBOARD AILERON (LH ONLY) | 1 | |
| | 65-7273-2 | . . FITTING ASSY, SUPPORT, OUTBOARD TAB HINGE, INBOARD AILERON (RH ONLY) | 1 | |
| 4 | 65-7273-3 | . . . FITTING, SUPPORT, OUTBOARD TAB HINGE, INBOARD AILERON (LH ONLY) | 1 | |
| | 65-7273-4 | . . . FITTING, SUPPORT, OUTBOARD TAB HINGE, INBOARD AILERON (RH ONLY) | 1 | |
| 5 | 90-9473-28 | . . . BUSHING, PRESSED FIT, STRUCTURAL | 1 | |
| 6 | 6-58450-2 | . . SUPPORT ASSY, BEARING, INBOARD AILERON (FOR BREAKDOWN SEE FIG. 37) | 3 | |
| | | (ATTACHING PARTS) | | |
| | NAS[illegible]-17DW | . . BOLT (FOR REPLACEMENT ORDER NAS1104-17D) | 2 | |
| | NAS[illegible]-39DW | . . BOLT (FOR REPLACEMENT ORDER NAS1104-39D) | 2 | |
| | NAS[illegible]-43DW | . . BOLT (FOR REPLACEMENT ORDER NAS1104-43D) | 2 | |
| | AN960[illegible]16L | . . WASHER | 12 | |
| | AN320-4 | . . NUT (FOR REPLACEMENT ORDER BACN10JD104) | 6 | |
| | 6-72071-6 | . . FITTING ASSY, SUPPORT, CENTER HINGE TAB, INBOARD AILERON | 1 | |
| 7 | NAS537D4P136 | . . . BUSHING | 1 | |
| 8 | 6-72071-7 | . . . FITTING, SUPPORT, CENTER HINGE TAB, INBOARD AILERON | 1 | |
| 8A | 5-86072-147 | . . SKIN ASSY, UPPER, PANEL, INBOARD AILERON (LH ONLY) | 1 | |
| | 5-86072-148 | . . SKIN ASSY, UPPER, PANEL, INBOARD AILERON (RH ONLY) | 1 | |
| 8B | 5-86072-149 | . . SKIN ASSY, LOWER, PANEL, INBOARD AILERON (LH ONLY) | 1 | |
| | 5-86072-150 | . . SKIN ASSY, LOWER, PANEL, INBOARD AILERON (RH ONLY) | 1 | |
| 8C | 5-86072-127 | . . FILLER, TRAILING EDGE, INBOARD AILERON | 1 | |
| | 69-4383-7 | . . BEAM INSTL, TRAILING EDGE, INBOARD AILERON (LH ONLY) | 1 | |
| | 69-4383-8 | . . BEAM INSTL, TRAILING EDGE, INBOARD AILERON (RH ONLY) | 1 | |

15136A
15137A

# Wing Control Surfaces

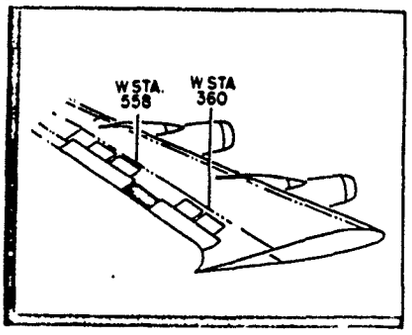


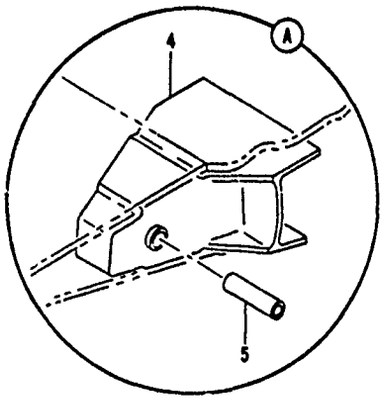


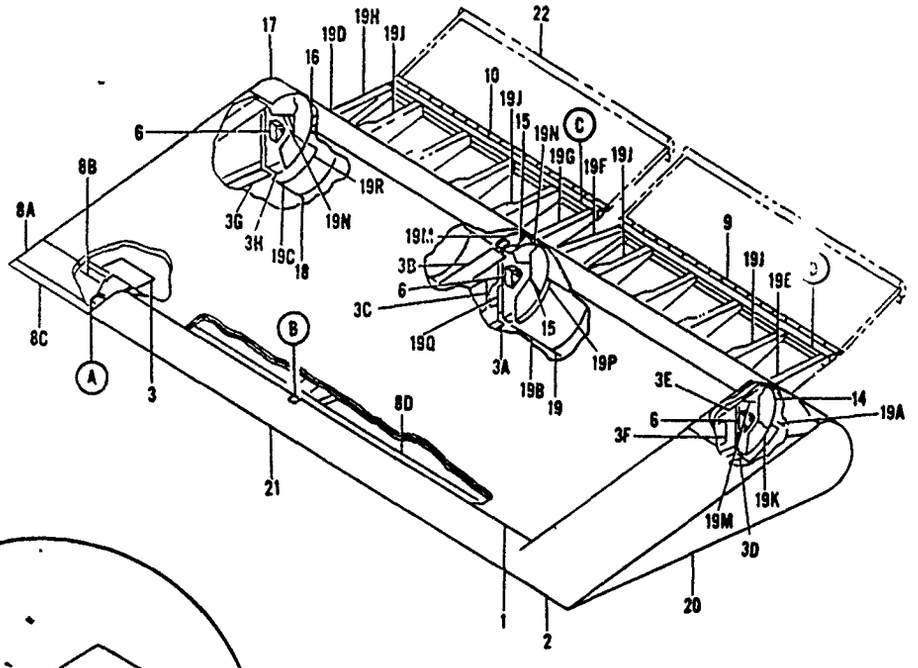


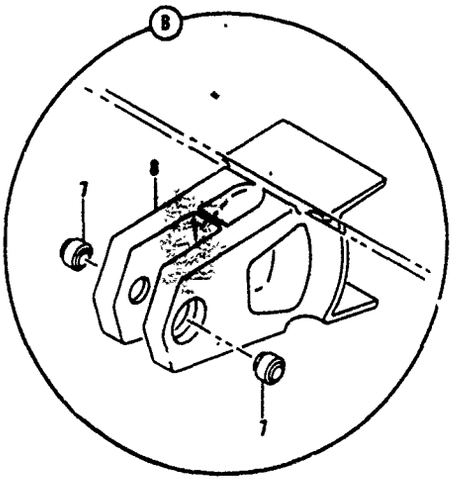


3153-36a

*Figure 36. Inboard Aileron and Tab Assemblies (Sheet 1 of 2)*

# Wing Control Surfaces

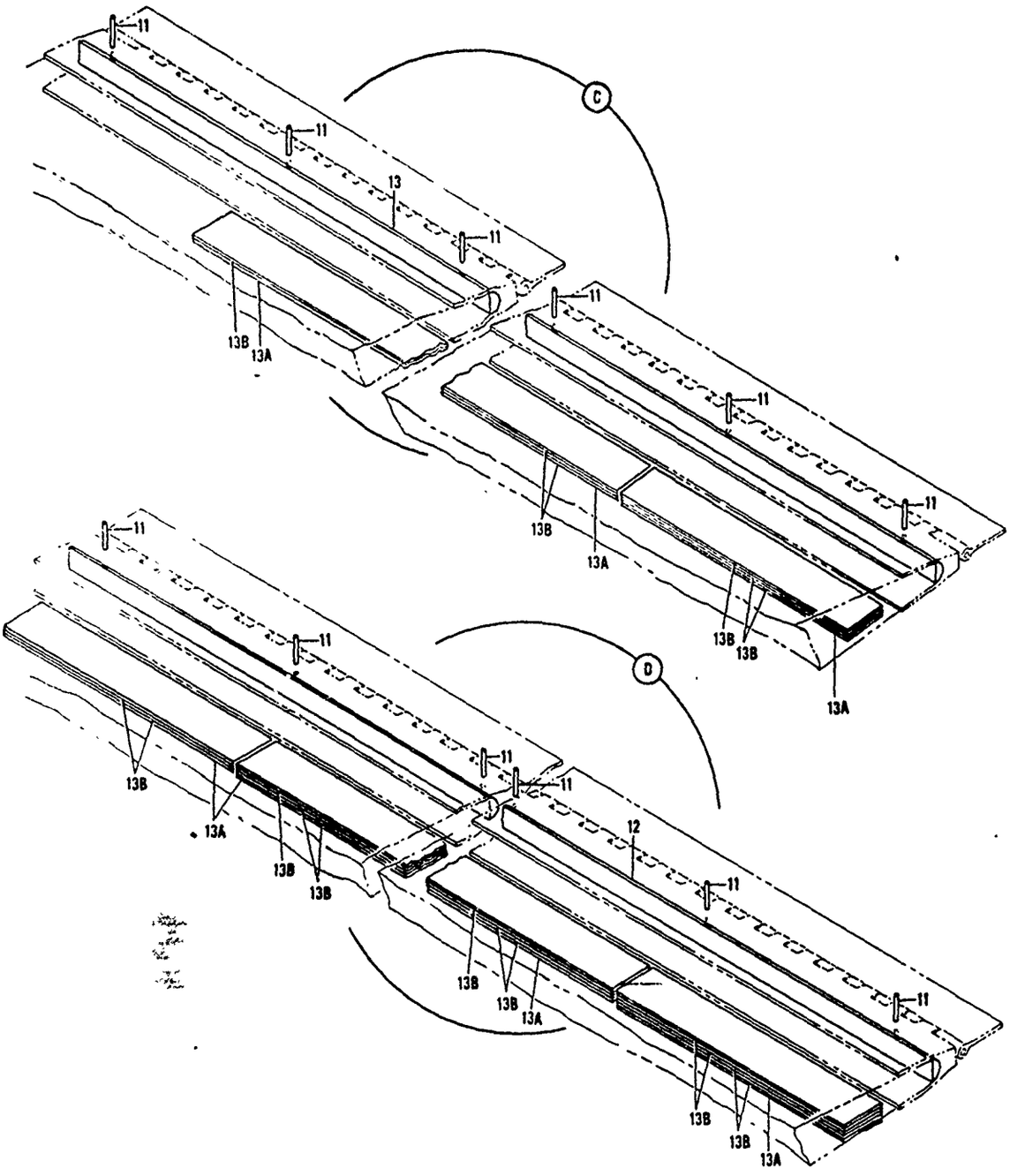


3153-36b

*Figure 36. Inboard Aileron and Tab Assemblies (Sheet 2 of 2)*

| FIGURE & INDEX NO. | PART NUMBER | DESCRIPTION 1 2 3 4 5 6 7 | UNITS PER ASSY | USE ON CODE |
|---|---|---|---|---|
| 36 - | | | | |
| 8D | 69-4383-5 | . . . BEAM, TRAILING EDGE, INBOARD AILERON (LH ONLY) . | 1 | |
| | 69-4383-6 | . . . BEAM, TRAILING EDGE, INBOARD AILERON (RH ONLY) . | 1 | |
| | | (ATTACHING PARTS) | | |
| | NAS517-3-4 | . . . SCREW . . . . . | 50 | |
| | | -------*------- | | |
| | 5-86074-25 | . . STRUCTURE INSTL, NOSE, INBOARD AILERON (LH ONLY) . | 1 | |
| | 5-86074-26 | . . STRUCTURE INSTL, NOSE, INBOARD AILERON (RH ONLY) . | 1 | |
| 9 | 9-61122-37 | . . . HINGE-HALF, BALANCE PANEL, INBOARD AILERON . . . (LH ONLY) (SUITABLE SUB 9-61122-33 OR 9-61122-19) | 1 | |
| | 9-61122-38 | . . . HINGE-HALF, BALANCE PANEL, INBOARD AILERON . . . (RH ONLY) (SUITABLE SUB 9-61122-34) | 1 | |
| 10 | 9-61122-39 | . . . HINGE-HALF, BALANCE PANEL, INBOARD AILERON . . . (LH ONLY) (SUITABLE SUB 9-61122-10) | 1 | |
| | 9-61122-40 | . . . HINGE-HALF, BALANCE PANEL, INBOARD AILERON . . . (RH ONLY) (SUITABLE SUB 9-61122-28) | 1 | |
| 11 | NAS561P3-11 | . . . PIN . . . . . | 12 | |
| 12 | 60-2641-3001 | . . . WEIGHT, BALANCE, NOSE, INBOARD AILERON (MAKE FROM ANTIMONY LEAD L 16 0.375 X 60 X 32.28) | 1 | |
| 13 | 60-2641-3002 | . . . WEIGHT, BALANCE, NOSE, INBOARD AILERON . . . . . | 1 | |
| 13A | 65-1091-1 | . . . WEIGHT, BALANCE, INBOARD AILERON (LH ONLY) . . . | 1 | |
| | 65-1091-2 | . . . WEIGHT, BALANCE, INBOARD AILERON (RH ONLY) . . . | 1 | |
| 13B | 65-1091-16 | . . . WEIGHT, BALANCE, INBOARD AILERON (USED WITH . . . 65-1091-1 AND -2) | AR | |
| 14 | 90-5529 | . . . SEAL ASSY, HINGE CAVITY, INBOARD AILERON (FOR . . BREAKDOWN SEE FIG. 37) | 1 | |
| 15 | 90-5529-3 | . . . SEAL ASSY, HINGE CAVITY, INBOARD AILERON (FOR . . BREAKDOWN SEE FIG. 37) | 2 | |
| | | (ATTACHING PARTS) | | |
| | AN3-5A | . . . BOLT . . . . . | 6 | |
| | AN960D10 | . . . WASHER . . . . . | 6 | |
| | NAS679A3W | . . . NUT . . . . . | 6 | |
| | | -------*------- | | |
| 16 | 90-5529-1 | . . . SEAL ASSY, HINGE CAVITY, INBOARD AILERON (LH . . ONLY) (FOR BREAKDOWN SEE FIG. 37) | 1 | |
| | 90-5529-2 | . . . SEAL ASSY, HINGE CAVITY, INBOARD AILERON (RH . . ONLY) (FOR BREAKDOWN SEE FIG. 37) | 1 | |
| | AN3-6A | . . . BOLT . . . . . | 2 | |
| | AN960D10 | . . . WASHER . . . . . | 2 | |
| | NAS679A3W | . . . NUT . . . . . | 2 | |
| | | -------*------- | | |
| 17 | 66-9351-1625 | . . . DOOR ASSY, ACCESS, SNUBBER, INBOARD AILERON . . . (LH ONLY) | 1 | |
| | 66-9351-1626 | . . . DOOR ASSY, ACCESS, SNUBBBER, INBOARD AILERON . . (RH ONLY) | 1 | |
| 18 | 9-61173-23 | . . . PANEL, NOSE SKIN, LOWER, INBOARD AILERON . . . . (LH ONLY) | 1 | |
| | 9-61173-24 | . . . PANEL, NOSE SKIN, LOWER, INBOARD AILERON . . . . (RH ONLY) | 1 | |
| 19 | 9-61173-21 | . . . PANEL, NOSE SKIN, LOWER, INBOARD AILERON . . . . (LH ONLY) | 1 | |
| | 9-61173-22 | . . . PANEL, NOSE SKIN, LOWER, INBOARD AILERON . . . . (RH ONLY) | 1 | |
| 19A | 9-61173-27 | . . . PANEL, NOSE SKIN, LOWER, INBOARD AILERON . . . . (LH ONLY) | 1 | |
| | 9-61173-28 | . . . PANEL, NOSE SKIN, LOWER, INBOARD AILERON . . . . (RH ONLY) | 1 | |
| 19B | 9-61173-5 | . . . PANEL, NOSE SKIN, LOWER, INBOARD AILERON . . . . (LH ONLY) | 1 | |
| | 9-61173-6 | . . . PANEL, NOSE SKIN, LOWER, INBOARD AILERON . . . . (RH ONLY) | 1 | |
| 19C | 9-61173-9 | . . . PANEL, NOSE SKIN, LOWER, INBOARD AILERON . . . . (LH ONLY) | 1 | |
| | 9-61173-10 | . . . PANEL, NOSE SKIN, LOWER, INBOARD AILERON . . . . (RH ONLY) | 1 | |
| 19D | 9-61172-7 | . . . PANEL, NOSE SKIN, UPPER, INBOARD AILERON . . . . (LH ONLY) | 1 | |
| | 9-61172-8 | . . . PANEL, NOSE SKIN, UPPER, INBOARD AILERON . . . . (RH ONLY) | 1 | |
| 19E | 9-60369-1 | . . . RIB, NOSE, INBOARD AILERON, STATION 466.36 . . . (LH ONLY) | 1 | |
| | 9-60369-2* | . . . RIB, NOSE, INBOARD AILERON, STATION 466.36 . . . (RH ONLY) | 1 | |

| FIGURE & INDEX NO. | PART NUMBER | DESCRIPTION<br>1 2 3 4 5 6 7 | UNITS PER ASSY | USE ON CODE |
|---|---|---|---|---|
| 36 - | | | | |
| 19F | 9-60370-1 | . . . RIB, NOSE, INBOARD AILERON, STATION 501 (LH ONLY) | 1 | |
| | 9-60370-2 | . . . RIB, NOSE, INBOARD AILERON, STATION 501 (RH ONLY) | 1 | |
| 19G | 9-60370-3 | . . . RIB, NOSE, INBOARD AILERON, STATION 501 (LH ONLY) | 1 | |
| | 9-60370-4 | . . . RIB, NOSE, INBOARD AILERON, STATION 501 (RH ONLY) | 1 | |
| 19H | 9-60371-1 | . . . RIB, NOSE, INBOARD AILERON, STATION 535.14 . . . (LH ONLY) | 1 | |
| | 9-60371-2 | . . . RIB, NOSE, INBOARD AILERON, STATION 535.14 . . . (RH ONLY) | 1 | |
| 19J | 6-68499 | . . . RIB, NOSE, INBOARD AILERON . . . . . | 8 | |
| 19K | 9-63015-1 | . . . FORMER, NOSE, INBOARD AILERON (LH ONLY) . . . . . | 1 | |
| | 9-63015-2 | . . . FORMER, NOSE, INBOARD AILERON (RH ONLY) . . . . . | 1 | |
| 19L | DELETED | | | |
| 19M | 9-63015-4 | . . . FORMER, NOSE, INBOARD AILERON . . . . . | 2 | |
| 19N | 9-63015-3 | . . . FORMER, NOSE, INBOARD AILERON . . . . . | 2 | |
| 19P | 9-63015-6 | . . . FORMER, NOSE, INBOARD AILERON . . . . . | 1 | |
| 19Q | 9-63015-5 | . . . FORMER, NOSE, INBOARD AILERON . . . . . | 1 | |
| 19R | 9-63015-7 | . . . FORMER, NOSE, INBOARD AILERON (LH ONLY) . . . . . | 1 | |
| | 9-63015-8 | . . . FORMER, NOSE, INBOARD AILERON (RH ONLY) . . . . . | 1 | |
| 20 | 5-86071-115 | . . END INSTL, INBOARD AILERON (LH ONLY) (FOR BREAKDOWN SEE FIG. 38) | 1 | |
| | 5-86071-116 | . . END INSTL, INBOARD AILERON (RH ONLY) (FOR BREAKDOWN SEE FIG. 38) | 1 | |
| 21 | 65-6774-7 | . TAB INSTL, INBOARD AILERON (LH ONLY) (FOR BREAKDOWN . SEE FIG. 39) | 1 | |
| | 65-6774-8 | . TAB INSTL, INBOARD AILERON (RH ONLY) (FOR BREAKDOWN . SEE FIG. 39) | 1 | |
| 22 | | PANEL INSTL, BALANCE, INBOARD AILERON (FOR REF . . . . SEE FIG. 41) | REF | |

# FLOW PROCESS CHART

SUBJECT Aileron Assy Enbd DATE 4/5/89

PCN: 15136A 15137A WCD: 15136A WCDDATE: 58205

CHART BEGINS Operation 010

CHART ENDS Operation 440 PREPARED BY: Tim Hall

| | SYMBOLS | DESCRIPTION |
|---|---|---|
| 010 | ● ◇ D □ ▽ | Receive and Uncrate 2122 MABPCB |
| | ○ ◇ ◗ □ ▽ | Delay |
| | ○ ◆ D □ ▽ | Move to MABPCA 2122 MABPCA |
| | ○ ◇ ◗ □ ▽ | Delay |
| 020 | ● ◇ D □ ▽ | Wash & strip paint |
| 030 | ● ◇ D □ ▽ | Treat for corrosion |
| | ○ ◇ ◗ □ ▽ | Delay |
| | ○ ◆ D □ ▽ | Move to 95 95 MABPAB |
| | ○ ◇ ◗ □ ▽ | Delay |
| 040 | ● ◇ D □ ▽ | Shakedown |
| 050 | ● ◇ D □ ▽ | Treat corrosion |
| | ○ ◇ ◗ □ ▽ | Delay |
| | ○ ◆ D □ ▽ | Move to 3001 3001 MATPIT |
| | ○ ◇ ◗ □ ▽ | Delay |
| 060 | ● ◇ D □ ▽ | Replace bushing in center hinge Fitting |
| 070 | ● ◇ D □ ▽ | Replace bushing in Tab Hng Fitting |
| 080 | ● ◇ D □ ▽ | Replace Rod end bearings |
| 090 | ● ◇ D □ ▽ | Install bushing in inboard aileron |
| 100 | ● ◇ D □ ▽ | Install bushing in center aileron |
| [illegible] | ● ◇ D □ ▽ | Install bushing in bellcrank assy |
| [illegible] | ● ◇ D □ ▽ | Install bushing in outbd aileron |
| [illegible] | ● ◇ D □ ▽ | Install bushing in inboard aileron snubber |
| 130 | ● ◇ D □ ▽ | Install bushing in support control mechanism |
| 135 | ● ◇ D □ ▽ | Transfer holes on -8, bearing support brkt |
| 140 | ● ◇ D □ ▽ | Transfer holes on brg support brkt -3001 |
| | ○ ◇ ◗ □ ▽ | Delay |
| | ○ ◆ D □ ▽ | Move to 95 95 MABPAB |
| | ○ ◇ ◗ □ ▽ | Delay |
| 150 | ○ ◇ D ■ ▽ | Check nose end ribs For cracks |

| | SYMBOLS | DESCRIPTION |
|---|---|---|
| 160 | ● ◇ D □ ▽ | Replace defective ribs and nose skins |
| 170 | ● ◇ D □ ▽ | Replace defective bearings |
| 180 | ● ◇ D □ ▽ | Replace tip nose panel hinges |
| 190 | ● ◇ D □ ▽ | Replace loose or missing fasteners |
| 200 | ● ◇ D □ ▽ | Replace chafing strips |
| 210 | ● ◇ D □ ▽ | Repair delamination of upper & lower skin panels |
| 220 | ● ◇ D □ ▽ | Replace upper skin panels |
| 230 | ● ◇ D □ ▽ | Replace Lower skin panels |
| 240 | ● ◇ D □ ▽ | Install aileron in Jig |
| 250 | ● ◇ D □ ▽ | Remove & replace Tab Hinge Fitting |
| 260 | ● ◇ D □ ▽ | Remove FOD & accomplish close out |
| 270 | ● ◇ D □ ▽ | Install skin panels |
| 280 | ● ◇ D □ ▽ | perform alignment check |
| 290 | ● ◇ D □ ▽ | Remove From jig |
| 300 | ● ◇ D □ ▽ | Replace defective seals |
| 310 | ● ◇ D □ ▽ | Replace defective access doors |
| 320 | ● ◇ D □ ▽ | Install access panels |
| 330 | ● ◇ D □ ▽ | Replace Fairings |
| 340 | ● ◇ D □ ▽ | Repair dents, gouges, nicks & scratches |
| 350 | ● ◇ D □ ▽ | Fill skin |
| | ○ ◇ ◗ □ ▽ | Delay |
| | ○ ◆ D □ ▽ | Move to MABPCB 2280 MABPCB |
| | ○ ◇ ◗ □ ▽ | Delay |
| 360 | ● ◇ D □ ▽ | Final Wash |
| 370 | ● ◇ D □ ▽ | Mask off aileron |
| 380 | ● ◇ D □ ▽ | Prime |
| 390 | ● ◇ D □ ▽ | Paint |
| | ○ ◇ ◗ □ ▽ | Dela/ |
| | ○ ◆ D □ ▽ | Move to 95 95 MABPCB |

## FLOW PROCESS CHART

SUBJECT Aileron Assy Inboard DATE 4/5/89

PCN: 15136A & 15137A WCD: 15136A WCD DATE: 88205

CHART BEGINS Operation 010

CHART ENDS Operation 440 PREPARED BY: Tim Hall

| SYMBOLS | DESCRIPTION | SYMBOLS | DESCRIPTION |
|---|---|---|---|
| | Delay | | |
| 400 | Balance Aileron 95 MMACAB | | |
| 410 | Eradicate existing weight markings | | |
| 420 | Install new weight & balance data | | |
| 430 | Service bearings | | |
| 440 | Condition Tag. | | |
| | | | |
| | | | |
| | | | |
| | | | |
| | | | |
| | | | |
| | | | |
| | | | |
| | | | |
| | | | |
| | | | |
| | | | |
| | | | |
| | | | |
| | | | |
| | | | |
| | | | |
| | | | |
| | | | |
| | | | |
| | | | |
| | | | |
| | | | |
| | | | |
| | | | |
| | | | |

| 15136A * WORK CONTROL DOCUMENT * MISTR 1.DATE 88205 PAGE 1 OF 5 PAGES |
|---|

| 2.ORIG/PROD NR | 3.QUANTITY | 4.PROD SECTION/RCC | 5.DATE SCHLD | 6.DATE COMP |
|---|---|---|---|---|
| | | MABPAB | 89093 | |

| 7.PART NUMBER | 9.ITEM SERIAL NR | 8/12.TECH DATA/OPTIONAL |
|---|---|---|
| | | 1. SOW C/N UC 1560//8-1-24. DTD 22 JUN 78 |
| 10.MODEL/DESIGN/SERIES | 11.STOCK NR | 2.REV NO.1, DTD 19 FEB 79 |
| C-135 | | 3.WRITE ADD'D WORK REQ'D 4.1.0.1C-135(K)A-3 1,3-3, 6.1 1 4,1-1 8. |

13.MISC. 14.NOUN/END ITEM NOUN
AILERON ASSY (NBD
MICHAEL TYTANIC/MABEBS/652e1

| P/N | NSN | C/N |
|---|---|---|
| (M) 5-86072-169 | 1560004413621FL | 15136A |
| 5-86072-165 | 1560006740912FL | 15214A |
| 5-86072-105 | 1560006046701FL | 15301A |
| 5-86072-161 | 1560006210777FL | 15303A |
| 5-86072-153 | 1560006214863FL | 15304A |
| 5-86072-117M | 1560006527448FL | 15306A |
| (M) 5-86072-170 | 1560004457470FL | 15137A |
| 5-86072-166 | 1560006740713FL | 15215A |
| 5-86072-106 | 1560006046702FL | 15302A |
| 5-86072-154 | 1560006214834FL | 15305A |
| 5-86072-118M | 1560006527449FL | 15307A |

15.DISP 16.WDN/

| STATION | OP NO. | 17.WORK TO BE ACCOMPLISHED | 18/19"P" | 20"W" |
|---|---|---|---|---|
| 2122 | 010 MBPCD | RECEIVE & UNCRATE<br>MOVE TO WASH RACK BLDG 2122 MBPCA | CQ | / |
| 2122 | 020 MBPCA | WASH & STRIP EXTERIOR PAINT IAW T.O. 1C-135(K)A-3-4, SECTION XI.<br>NOTE:PLUG ALL DRAIN HOLES TO PREVENT STRIPPER FROM ENTERING INTERIOR. | 4W | / / |
| 2122 | 030 MBPCA | TREAT FOR CORROSION IAW T.O. 1C-135 (K)A-3-4, SECTION IV | 4W | / / |
| 95 | 040 MBPAB | REMOVE LOWER SKIN PANELS AND ACCOMPLISH SHAKEDOWN INSPECTION IAW SOW. ANNOTATE DISCREPANCIES. | ES | / / |
| 95 | 050 MBPAB | REMOVE & TREAT CORROSION IAW T.O. 1C-135(K)A-3-4, SECTION IV.<br>REQ'D____NOT REQ'D____<br>MOVE TO MTPIT | ES | / / |
| 0-65 BLDG 3001 | 060 MTPIT | REPLACE BUSHING IN CENTER TAB HINGE FITTING IAW 1C-135(K)A-3-3<br>REQ'D____NOT REQ'D____ | JA | / / |
| 0-65 3001 | 070 MTPIT | REPLACE BUSHING IN OUTBRD TAB HINGE FITTING IAW T.O. 1C-135(K)A-3-3<br>REQ'D____NOT REQ'D____ | JA | / / |

| 15.DISP-16.PDN/ STATION | OP NO. | 17.WORK TO BE ACCOMPLISHED | 18.MECH | 19"P" | 20"Q" |
|---|---|---|---|---|---|
| 0-65 | 080 MTPIT | REPLACE WORN OR LOOSE ROD END BEARINGS IAW T.O. 1C-135(K)A-3-3, FIG 2-10, DETAIL 1, JOINT 2<br><br>REQ'D____NOT REQ'D____ | JA | / | / |
| 0-65 | 090 MTPIT | INSTALL BUSHING IN INBOARD AILERON ATTACH BEARNG SUPPORT IAW 1C-135 (K)A 3-3, FIG 2 10, DETAIL I, JOINT. 3 & 12.<br><br>REQ'D____NOT REQ'D____ | JA | / | / |
| 0-65 | 100 MTPIT | INSTALL BUSHING IN CENTER AILERON ATTACH BEARING SUPPORT IAW 1C-135(K) A-3 3, FIG 2-10, DETAIL III, JOINT 3<br><br>REQ'D____NOT REQ'D____ | JA | / | / |
| 0-65 | 105 MTPIT | INSTALL BUSHINGS IN BELLCRANK ASSY. IAW IC 135(K)A [illegible] JOINT 6<br>MIN. ---------- MAX.<br>.2495 ---------- .2505<br>REQ'D_____ NOT REQ'D_____ | JA | / | / |
| 0-65 | 110 MTPIT | INSTALL BUSHING IN OUTBOARD AILERON ATTACH BEARING SUPPORT IAW 1C-135(K) A-3-3, FIG 2-10 DETAIL II, JOINT 3<br><br>REQ'D____NOT REQ'D____ | JA | / | / |
| 0-65 | 120 MTPIT | INSTALL BUSHING IN INBOARD AILERON SNUBBER IAW 1C-135(K)A-3-3, FIG 2-10B<br><br>REQ'D____NOT REQ'D____ | JA | / | / |
| 0-65 | 130 MTPIT | INSTALL BUSHING IN SUPPORT CONTROL MECHANISM IAW IC-135 (K)A-3-3<br><br>REQ'D____NOT REQ'D____ | JA | / | / |
| 0-65 | 135 MTPIT | TRANSFER HOLES ON BEARING SUPPORT BRACKET,P/N 69-1353 8 & 9 IAW WITH T.O.135(K)A-3-3.<br>REQ'D_____ NOT REQ'D_____ | JA | / | / |
| 0-65 | 140 MTPIT | TRANSFER HOLES ON BEARING SUPPORT BRACKET. P/N 9-60366-2001 IAW 1C-135 (K)A-3-3<br><br>REQ'D____NOT REQ'D____ | JA | / | / |
| 95 | 150 MBPAB | CHECK NOSE END RIBS FOR CRACKS. IF CRACKED, REMOVE NOSE SKIN & INSPECT ALL NOSE RIBS. | ES | / | / |

(CONTINUED)

| 15136A * WORK CONTROL DOCUMENT * MISIR 1.DATE 88205 | PAGE 3 OF 5 PAGES | | |
|---|---|---|---|
| 15.DISP-16.PDN/ STATION | OP NO. | 17.WORK TO BE ACCOMPLISHED | 18.MECH | 19"P" | 20"Q" |
| | | REQ'D____NOT REQ'D____ | | | |
| 95 | 160 MBPAB | REPLACE RIBS AND NOSE SKINS THAT HAVE CRACKS AND/OR OVERSIZED HOLES<br><br>REQ'D____NOT REQ'D____ | ES | / | / |
| 95 | 170 MBPAB | REPLACE DAMAGED, LOOSE OR FROZEN BEARINGS.<br><br>REQ'D____NOT REQ'D____ | ES | / | / |
| 95 | 180 MBPAB | REPLACE BALANCE PANEL HINGES.<br><br>REQ'D____NOT REQ'D____ | ES | / | / |
| 95 | 190 MBPAB | REPLACE LOOSE AND/OR MISSING FAST ENERS IAW WORK STATEMENT.<br><br>REQ'D____NOT REQ'D____ | ES | / | / |
| 95 | 200 MBPAB | REPLACE CHAFING STRIPS<br><br>REQ'D____NOT REQ'D____ | ES | / | / |
| 95 | 210 MBPAB | REPAIR DELAMINATION OF UPPER & LOWER SKIN PANELS IAW T.O. 1C-135(K)A-3-1, SECTION X<br><br>REQ'D____NOT REQ'D____ | ES | / | / |
| 95 | 220 MBPAB | REPLACE UPPER SKIN PANELS<br><br>REQ'D____NOT REQ'D____ | ES | / | / |
| 95 | 230 MBPAB | REPLACE LOWER SKIN PANELS. NOTE; CLEAN & CLOSE OUT INSPECTION REQ'D.<br><br>REQ'D____NOT REQ'D____ | ES | L | / |
| 95 | 240 MBPAB | INSTALL AILERON IN JIG P/N59UCJ 1010 | ES | / | / |
| 95 | 250 MBPAB | REMOVE & REPLACE DAMAGED TAB HINGE FITTING WITH NEW FITTING P/N [illegible] 1C-135(K)A-3-1<br><br>REQ'D____NOT REQ'D____ | ES | / | / |
| 95 | 260 MBPAB | REMOVE FOD & ACCOMPLISH CLOSE OUT | ES | L | / |
| 95 | 270 MBPAB | INSTALL SKIN PANELS<br><br>REQ'D____NOT REQ'D____ | ES | / | / |
| 95 | 280 MBPAB | PERFORM ALIGNMENT CHECK.<br>1C-135(K)A-3-4, XXXXXXXXXXXXXXXXX | ES | E | / |

15136A * WORK CONTROL DOCUMENT * MISTR 1.DATE 98205 PAGE 4 OF 5 PAGES

| 15.DISP-16.PDN/ STATION | OP NO. | 17.WORK TO BE ACCOMPLISHED | 18.MECH | 19"P" | 20"Q" |
|---|---|---|---|---|---|
| 95 | 290 MBPAB | REMOVE FROM JIG | ES | / | / |
| 95 | 300 MBPAB | REPLACE DAMAGED OR WORN FELT SEALS WITH NEW SEALS.<br>REQ'D____NOT REQ'D____ | ES | / | / |
| 95 | 310 MBPAB | REPLACE ANY DAMAGED ACCESS DOORS<br>REQ'D____NOT REQ'D____ | ES | / | / |
| 95 | 320 MBPAB | INSTALL ACCESS PANELS. NOTE: CLOSE OUT INSPECTION REQUIRED. MOVE TO BLDG 2280-MBPCB. | ES | / | |
| 95 | 330 MBPAB | REPLACE FAIRINGS P/N9-66805 1 & 69-6605-5 IF DAMAGED.<br>REQ'D____NOT REQ'D____ | ES | / | / |
| 95 | 340 MBPAB | REPAIR ALL DENTS, GOUGES, NICKS & SCRATCHES IAW T.O.1C-135(K)A-3-1<br>REQ'D____NOT REQ'D____ | ES | / | / |
| 95 | 350 MBPAB | FILL SKIN TO STRUCTURE GAPS WITH ENVIRONMENTAL SEALANT. | ES | / | / |
| 2280 | 360 MBPCB | FINAL WASH & TREAT PRIOR TO PAINT. MOVE TO PAINT-BLDG 2280-MBPCB | AR | | |
| 2280 | 370 MBPCB | MASK OFF AILERON IAW 1C-135(K)A 3-4, XXXXXXXXXXXXXXXX | 3B | / | / |
| 2280 | 380 MBPCB | AFTER MASKING OFF AILERON PRIME IAW 1C-135(K)A-3-4, XXXX XXXXX XXXX XXX | | | |
| 2280 | 390 MBPCB | PAINT AILERON IAW T.O. 1C-135(K) A-3-1.<br>MOVE TO BLDG 95, MABPAB | 3B | / | / |
| 95 | 400 MBPAB | BALANCE AILERON IAW T.O. 1C-135(K) A-3-1 | ES | / | / |
| 95 | 410 MBPAB | REMOVE OR MARK OUT EXISTING WEIGHT MARKINGS. | ES | / | / |
| 95 | 420 MBPAB | INSTALL NEW WEIGHT & BALANCE DATA & DATE. | ES | / | / |
| 95 | 430 MBPAB | SERVICE BEARINGS AND WRAP WITH BARRIER PAPER | ES | / | / |
| 95 | 440 MBPAB | WORK COMPLETED. CONDITION TAG IAW AFM 67-1. DATE_____<br>MOVE TO CRATING.<br>NOTE: PART WILL HAVE EITHER OC-ALC | | E | / |

(CONTINUED)

| 15136A * WORK CONTROL DOCUMENT * MISTR L.DATE 88205 | PAGE 5 OF 5 PAGES |
|---|---|

| 15.DISP-16.PDN/ STATION | OP NO. | 17.WORK TO BE ACCOMPLISHED | 18.MECH | 19"P" | 20"Q" |
|---|---|---|---|---|---|
| | | FORM 586,587 OR 588 IDENTIFICATION =LABELS APPLIED TO COMPLETED ITEM IAW AFLCR 66-51, CHG 2 ACCEPTANCE DATE ON THE LABEL ALONG WITH "M" STAMP OF THE PERSON PERFORM ING THE OVERHAUL. CAUTION:SURFACES TO WHICH LABELS ARE APPLIED MUST BE FREE OF CONTAMINA- TION. NOTE: COMPLETE "REMARKS" COLUMN OF AFLC FORM 1574 IAW MAN1 66-56. | | | |
| | | MABEFS MICHAEL TYTANIC 23 FEB 88 | | | |
| | | MAQBF TED MATTES 23 FEB 88 | | | |
| | | MABSF PAT HANLOCK 23 FEB 88 | | | |
| | | MBPAB GARY HART 23 FEB 88 | | | |

# Power Plant

15140A

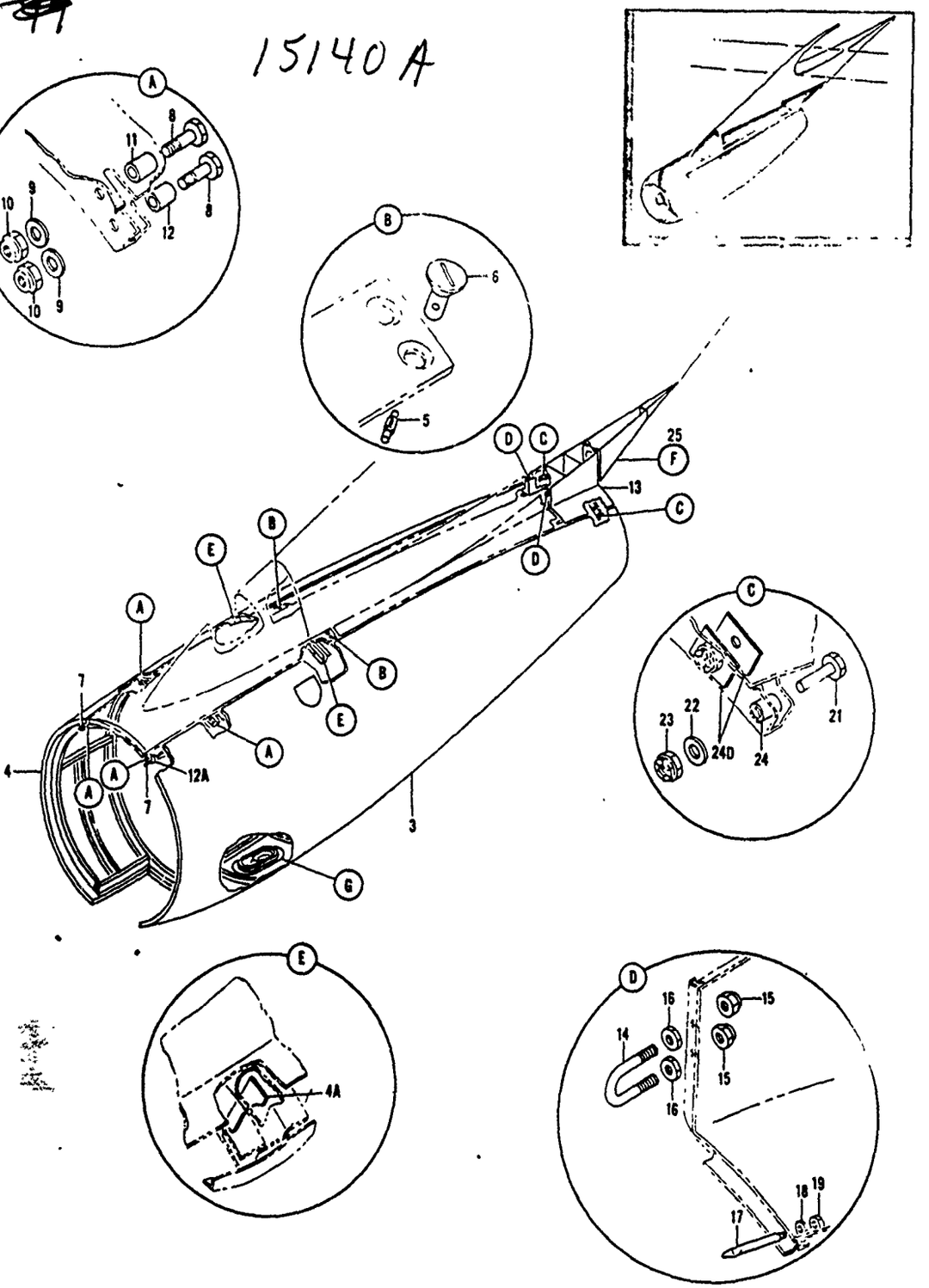


*Figure 1100. Engine Nacelle Cowl Installations (Sheet 1 of 2)*

| FIGURE & INDEX NO. | PART NUMBER | DESCRIPTION 1 2 3 4 5 6 7 | UNITS PER ASSY | USE ON CODE |
|---|---|---|---|---|
| 1100- | | | | |
| | 50-3371 | COWL INSTL, ENGINE NACELLE (ENGINES NO. 1, 2 AND 3) . . . (FOR NHA SEE FIG. 1099) | REF | A |
| | 50-3371-1 | COWL INSTL, ENGINE NACELLE (ENGINE NO. 4) (FOR NHA SEE. . FIG. 1099) | REF | A |
| 1 | NAS514P1032-6 | . SCREW (FOR REPLACEMENT ORDER NAS514P1032-6P). . . . . | 10 | A |
| 2 | NAS679A3W | . NUT (ALTERNATE BACN10JC3) . . . . . | 10 | A |
| 2A | 90-3342 | . DUCT, AIR EXHAUST, ALTERNATOR COOLING (USED ON 50-3371) | 1 | A |
| 2A | 90-3343-2 | . DUCT, EXHAUST, FUEL AIR STARTER (USED ON 50-3371-1) . . | 1 | B |
| 2A | 90-3343-1 | . DUCT, EXHAUST, FUEL AIR STARTER (USED ON 50-3371-1) . . | 1 | C |
| 2B | 1200874-10 | . SEAL ASSY, BELLOWS, EXHAUST EXIT, FUEL AIR STARTER. . . (98769) (BOEING SPEC 10-2748-1) (ALTERNATE 65-32834-1) (USED ON 50-3371-1) | 1 | B |
| 2B | 1200874 | . SEAL ASSY, BELLOWS, EXHAUST EXIT, FUEL AIR STARTER. . . (98769) (ALTERNATE 8449402 (71688)) (BOEING SPEC 10-2748) (FOR REPLACEMENT ORDER 1200874-10 (98769) (BOEING SPEC 10-2748-1)) (USED ON 50-3371-1) | 1 | C |
| 2B | 1200874 | . SEAL ASSY, BELLOWS, EXHAUST EXIT, FUEL AIR STARTER. . . (98769) (ALTERNATE 8449402 (71688)) (BOEING SPEC 10-2748) (FOR REPLACEMENT ORDER 1200874-10 (98769) (BOEING SPEC 10-2748-1)) (USED ON 50-3371) (FOR REPAIR OF 1200874 AND 1200874-10 ORDER 69B25097-1) | 1 | A |
| 2C | 69-22576-1 | . SEAL, GASKET, STARTER EXHAUST EXIT (USED ON 50-3371-1). | AR | B |
| 3 | 5-85637 | . PANEL ASSY, SIDE COWL, LEFT HAND, ENGINE NACELLE (FOR . BREAKDOWN SEE FIG. 1101) | 1 | A |
| 3 | 35-32371-1 | . PANEL ASSY, LEFT HAND SIDE COWL, ENGINE NACELLE (FOR. . BREAKDOWN SEE FIG. 1101) | 1 | A |
| 4 | 5-85638 | . PANEL ASSY, SIDE COWL, RIGHT HAND, ENGINE NACELLE . . . (FOR BREAKDOWN SEE FIG. 1102) | 1 | A |
| 4 | 35-32370-1 | . PANEL ASSY, SIDE COWL, RIGHT HAND, ENGINE NACELLE (FOR. BREAKDOWN SEE FIG. 1102) | 1 | A |
| 4 | 7727042-10 | . PANEL ASSY, SIDE COWL, RIGHT HAND, ENGINE NACELLE (FOR. BREAKDOWN SEE FIG. 1102) | 1 | A |
| | 5-85654-25 | . FAIRING ASSY, NACELLE FORWARD . . . . . | 1 | B |
| | 5-85654 | . FAIRING ASSY, NACELLE FORWARD (ALTERNATE AND FOR. . . . REPLACEMENT ORDER 5-85654-25) | 1 | C |
| 4A | 5-85654-21 | . . BLOCK, STOP, NACELLE FORWARD. . . . . | 2 | A |
| 5 | 99836 | . . PIN, COWL FASTNR (61864) (BACP18A5) . . . . . | 4 | A |
| 6 | 98265-2-.230 | . . STUD, COWL FASTNR (61864) (BACS21B5FH23). . . . . | 4 | A |
| 7 | 60-1507 | . . PIN, FAIRING SUPPORT, FORWARD NACELLE . . . . . (ATTACHING PARTS) | 2 | A |
| | NAS517-3-8 | . . SCREW (ALTERNATE BACB30LU3-8) . . . . . | 2 | A |
| | NAS517-3-12 | . . SCREW (ALTERNATE BACB30LU3-12). . . . . | 2 | A |
| | AN960-10L | . . WASHER. . . . . | 4 | A |
| | NAS679A3W | . . NUT (ALTERNATE BACN10JC3) . . . . . | 4 | A |
| | | --------*-------- | | |
| 8 | NAS1104-11W | . . BOLT (ALTERNATE BACB30NE4-11) . . . . . | 8 | A |
| 9 | AN960-416 | . . WASHER. . . . . | 8 | A |
| 10 | NAS679A4W | . . NUT (ALTERNATE BACN10JC4) . . . . . | 8 | A |
| 11 | 6-84606 | . . SPACER, HINGE, COWL PANEL, ENGINE NACELLE . . . . . | 4 | A |
| 12 | 6-84606-1 | . . SPACER, HINGE, COWL PANEL, ENGINE NACELLE . . . . . | 4 | A |
| 12A | 5-85654-3 | . . FRAME, FORWARD FAIRING, NACELLE . . . . . | 1 | A |
| | 5-85653-51 | . FAIRING ASSY, AFT, ENGINE NACELLE, SECTION 71 . . . . . | 1 | A |
| 13 | 5-85653-52 | . . FAIRING ASSY, AFT FWD, ENGINE NACELLE, SECTION 71 . . | 1 | A |
| 14 | 9-66304-1 | . . . U-BOLT, COWL LATCH, ENGINE NACELLE. . . . . (ATTACHING PARTS) | 2 | A |
| 15 | MS21042L5 | . . . NUT (REPLACES NAS679A5 OR BACN10JC5). . . . . | 4 | A |
| 16 | AN315-5R | . . . NUT . . . . . | 4 | A |
| | | --------*-------- | | |
| 17 | 60-1491 | . . . PIN, GUIDE, COWL FAIRING, ENGINE NACELLE. . . . . (ATTACHING PARTS) | 2 | A |
| 18 | AN960-616L | . . . WASHER. . . . . | 2 | A |
| 19 | MS21042L6 | . . . NUT (REPLACES NAS679A6 OR BACN10JC6). . . . . | 2 | A |
| | | --------*-------- | | |

# FLOW PROCESS CHART

SUBJECT: FAIRING ASSY FWD NACELLE DATE: 4/5/89

PCN: 15140A WCD: 15140A WCDDATE: 89073

CHART BEGINS

PAGE 1 OF 1

CHART ENDS

PREPARED BY: R. BOLANOS

| WCD OP # | SYMBOLS | DESCRIPTION |
|---|---|---|
| 10 | ● ◇ D □ ▽ | REC. & UNCRATE 2222 MABPCD |
| | ○ ◇ ◗ □ ▽ | DELAY |
| | ○ ◆ D □ ▽ | MOVE TO CLEAN & STRIP MABPCA |
| | ○ ◇ ◗ □ ▽ | DELAY |
| 20 | ● ◇ D □ ▽ | STRIP PAINT & CLEAN |
| | ○ ◇ ◗ □ ▽ | DELAY |
| | ○ ◆ D □ ▽ | MOVE TO SHEETMETAL 95 MABPAB |
| | ○ ◇ ◗ □ ▽ | DELAY |
| 30 | ○ ◇ D ■ ▽ | SHAKEDOWN INSPECTION |
| 40 | ● ◇ D □ ▽ | REMOVE CORROSION |
| 50 | ● ◇ D □ ▽ | REPAIR L.H. LONGERON |
| 60 | ○ ◇ D □ ▽ | BLANK STEP |
| 70 | ● ◇ D □ ▽ | R/R FRAME 5-85654-5 |
| 80 | ● ◇ D □ ▽ | ASSY. 60-1512-1 & 60-1512-2 PLATES, INSTALL BLOCK & L BUSHINGS |
| 90 | ● ◇ D □ ▽ | R/R FRAME 5-85654-4 |
| 100 | ● ◇ D □ ▽ | R/R LONGERON IN FIXTURE 5-85654-ASSY |
| 110 | ● ◇ D □ ▽ | INSTALL PLATES |
| 120 | ● ◇ D □ ▽ | R/R FORMER |
| 130 | ● ◇ D □ ▽ | ASSY. PLATES |
| 140 | ● ◇ D □ ▽ | R/R FRAME IN FIXTURE |
| 150 | ● ◇ D □ ▽ | R/R SKIN ON FIXTURE 5-85654-800 |
| 160 | ● ◇ D □ ▽ | R/R SKIN ON FIXTURE -801 |
| 170 | ● ◇ D □ ▽ | R/R STIFFENER |
| 180 | ● ◇ D □ ▽ | R/R ANGLE R.H. |
| 190 | ● ◇ D □ ▽ | R/R ANGLE L.H. |
| 200 | ● ◇ D □ ▽ | R/R FRAME 60-1514-1 |
| 210 | ● ◇ D □ ▽ | R/R " -2 |
| 220 | ● ◇ D □ ▽ | R/R FASTENERS |
| 230 | ● ◇ D □ ▽ | R/R DENTS/SCRATCHES |
| 240 | ● ◇ D □ ▽ | R/R PINS |
| 250 | ● ◇ D □ ▽ | CHECK ALIGNMENT |
| 260 | ● ◇ D □ ▽ | INSTALL UPPER BUSHINGS |
| 270 | ● ◇ D □ ▽ | ASSURE LATCH FITS BUSHING |
| | ○ ◇ ◗ □ ▽ | DELAY |
| | ○ ◆ D □ ▽ | MOVE TO WASH & PAINT 2280 MABPCB |
| | ○ ◇ ◗ □ ▽ | DELAY |
| 280 | ● ◇ D □ ▽ | WASH |
| 290 | ● ◇ D □ ▽ | PAINT INTERIOR SURFACE |
| | ○ ◇ ◗ □ ▽ | DELAY |
| | ○ ◆ D □ ▽ | MOVE TO SHEETMETAL 95 MABPAB |
| | ○ ◇ ◗ □ ▽ | DELAY |
| 300 | ● ◇ D ■ ▽ | WORK COMPLETED INSPECT & TAG |
| | ○ ◇ D □ ▽ | |
| | ○ ◇ D □ ▽ | |
| | ○ ◇ D □ ▽ | |
| | ○ ◇ D □ ▽ | |
| | ○ ◇ D □ ▽ | |
| | ○ ◇ D □ ▽ | |
| | ○ ◇ D □ ▽ | |
| | ○ ◇ D □ ▽ | |
| | ○ ◇ D □ ▽ | |
| | ○ ◇ D □ ▽ | |
| | ○ ◇ D □ ▽ | |
| | ○ ◇ D □ ▽ | |
| | ○ ◇ D □ ▽ | |
| | ○ ◇ D □ ▽ | |
| | ○ ◇ D □ ▽ | |
| | ○ ◇ D □ ▽ | |

NO OPERATION DONE ←

15140A * WORK CONTROL DOCUMENT * MISTR 1.DATE 89073 PAGE 1 OF 3 PAGES

| 2.ORIG/PROD NR | 3.QUANTITY | 4.PROD SECTION/RCC | 5.DATE SCHED | 6.DATE COMP |
|---|---|---|---|---|
| | | MBPAB | 89093 | |

| 7.PART NUMBER | 9.ITEM SERIAL NR | 10/12.TECH DATA/OPTIONAL |
|---|---|---|
| | | 1.1C-135(K)A-3-1, 3-4,A-4 0C-1560FL/78-1-1, |
| 10.MODEL/DESIGN/SERIES | 11.STOCK NR | 2.ECO 13MAY83 |
| C 135 | | 3.FILL IN ANY ADD'L |
| | | 4.WORK REQ'D. |

| 13.MISC | 14.NOUN/END ITEM NOUN |
|---|---|
| | FAIRING ASSY FWD NACELLE |
| | PHILLIPS HEALD/MABEBS/65265 |

| P/N | NSN | C/N |
|---|---|---|
| 5-85654-15 | 1560004637577FL | 15140A |
| 5-85654-23 | 1560001361731FL | 15109A |
| 5-85654 | 1560003409212FL | 15125A |

| 15.DISP-STATION | 16.PDN/OP NO. | 17.WORK TO BE ACCOMPLISHED | 18.MECH | 19"P" | 20"Q" |
|---|---|---|---|---|---|
| 2122 | 010 MBPCD | RECEIVE & UNCRATE<br>MOVE TO MBPCA | | / | / |
| 2122 | 020 MBPCA | STRIP INTERIOR OF ZINC CHROMATE & CLEAN EXTERIOR SURFACE IAW 1C-135(K) A-3-4 MOVE TO BLDG. 95, MBPAB | | / | / |
| 95 | 030 MBPAB | SHAKEDOWN INSPECTION IAW WORK RLQ'T<br>ANNOTATE DISCREPANCIES.<br>MBPAB. | | / | / |
| 95 | 040 MBPAB | REMOVE CORROSION IAW 1C-135(K)A-3-4 PARA. 4-9 THRU 4-17<br><br>REQ'D_____NOT REQ'D_____ | | / | / |
| 95 | 050 MBPAB | REPAIR OR REPLACE L.H. LONGERON P/N 5-85654-1 IAW 1C-135(K)A-3-1, FIG 10 -3 IN FIXTURE P/N 5-8564ASMJ ECO 13MAY83 CLARIFY CUTOUT FOR -1 LONGERON IN SHOP.<br>REQ'D_____NOT REQ'D_____ | | E | / |
| 95 | 060 MBPAB | THIS STEP LEFT BLANK INTENTIONALLY | | | |
| 95 | 070 MBPAB | FRAME P/N 5-85654-5<br>REPAIR_____REPLACE____NOT REQ'D____ | | / | / |
| 95 | 080 MBPAB | ASSEMBLE 60-1512-1 AND 60-1512-2 PLATES ON 5-85654-5. INSTALL BLOCKS AND LOWER BUSHINGS.<br>REQ'D_____ NOT REQ'D_____ | | / | / |
| 95 | 090 MBPAB | FRAME P/N 5-85654-4<br>REPAIR____REPLACE____NOT REQ'D_____ | | E | / |
| 95 | 100 MBPAB | R.H. LONGERON P/N 5-85654-2 IAW 1C-135(K)A-3-1, FIG 10 3 IN FIXTURE P/N 5-85654-ASMJ | | E | / |

(CONTINUED)

| 15140A * WORK CONTROL DOCUMENT * MISTR 1.DATE 39073 PAGE 2 OF 3 PAGES |
|---|

| 15.DISP-16.PDN/ STATION | OP NO. | 17.WORK TO BE ACCOMPLISHED | 18.MECH | 19"P" | 20"Q" |
|---|---|---|---|---|---|
| | | REPAIR____REPLACE____NOT REQ'D____ | | | |
| 95 | 110 MBPAB | INSTALL PLATES P/N 60-1513, 60-1510 AND STIFFENER P/N 60-1515-2 ON 5-85654-2 LONGERON<br>REPAIR____REPLACE____NOT REQ'D____ | | / | / |
| 95 | 120 MBPAB | FORMER P/N 5-85654-3<br>REPAIR____REPLACE____NOT REQ'D____ | | E | / |
| 95 | 130 MBPAB | ASSEMBLE PLATES 60-1511-3 & 60-1511-4, FRAMES 60-1514-3 & 60-1514-4 ON FORMER P/N 5-85654-3. INSTALL BLOCKS AND LOWER BUSHINGS.<br>REQ'D_____ NOT REQ'D_____ | | / | / |
| 95 | 140 MBPAB | FRAME P/N 5-85654-6 IN FIXTURE P/N 5-85654ASMJ<br>REQ'D_____NOT REQ'D____. | | / | / |
| 95 | 150 MBPAB | PLACE IN FIXTURE TO REPAIR/REPLACE SKIN P/N 5-85654-800<br>REPAIR_____REPLACE_____NOT REQ'D____ | | / | / |
| 95 | 160 MBPAB | PLACE IN FIXTURE TO REPAIR/REPLACE SKIN P/N 5-85654-801<br>REPAIR_____REPLACE_____NOT REQ'D___ | | E | / |
| 95 | 170 MBPAB | STIFFENER P/N 5-85654-22<br>REPAIR_____REPLACE_____NOT REQ'D___ | | / | / |
| 95 | 180 MBPAB | R.H. ANGLE P/N 5-85654-24<br>REPAIR_____REPLACE_____NOT REQ'D____ | | / | / |
| 95 | 190 MBPAB | L.H. ANGLE P/N 5-85654-25<br>REPAIR_____REPLACE_____NOT REQ'D____ | | / | / |
| 95 | 200 MBPAB | FRAME P/N 60-1514-1 IN FIXTURE<br>REPAIR_____REPLACE_____NOT REQ'D____ | | / | / |
| 95 | 210 MBPAB | FRAME P/N 60-1514-2 IN FIXTURE<br>REPAIR_____REPLACE_____NOT REQ'D____ | | / | / |
| 95 | 220 MBPAB | LOOSE, MISSING & DEFECTIVE FASTENERS<br>REPAIR_____REPLACE_____NOT REQ'D____ | | / | / |
| 95 | 230 MBPAB | REPAIR ALL MINOR DENTS, SCRATCHES, NICKS AND ABRASIONS.<br>REQ'D_____NOT REQ'D_____ | | / | / |
| 95 | 240 MBPAB | REPLACE PIN P/N 60-1507 IF WORN BEYOND DRAWING DIMENSIONS.<br>REQ'D_____NOT REQ'D_____ | | / | / |
| 95 | 250 MBPAB | CHECK IN FIXTURE P/N 5-85654-ASMJ FOR ALIGNMENT. | | E | / |

| 15140A * WORK CONTROL DOCUMENT * M13TR I.DATE 89073 | PAGE 3 OF 3 PAGES |
|---|---|

| 15.DISP-16.PDN/ STATION | OP NO. | 17.WORK TO BE ACCOMPLISHED | 18.MECH | 19"P" | 20"Q" |
|---|---|---|---|---|---|
| 95 | 260 MBPAB | INSTALL UPPER BUSHINGS IN FORMERS P/N 5-85657-3 & 5-85654 5. | | / | / |
| 95 | 270 MBPAB | MAKE SURE LATCH P/N 5-96762-2 & 5-96766-3, FITS BUSHING & SLOTS AT NO. 5 RIB & NO. 3 RIB, BOTH SIDES | | E | / |
| 2280 | 280 MBPCB | FINAL WASH & CORROSION TREATMENT | | / | / |
| 2280 | 290 MBPCB | PAINT INTERIOR SURFACE WITH MIL-P-23377 IAW 1C-135(K)A-3-4, SECTION XI MOVE TO BLDG. 95 | | / | / |
| 95 | 300 MBPAB | WORK COMPLETED, CONDITION TAG DATE _____ MOVE TO CRATING NOTE: PART WILL HAVE EITHER DC-ALC FORM 504,587,588 IDENTIFICATION, LABELS APPLIED TO COMPLETED ITEM IAW MADI 66-4. ACCEPTANCE DATE ON THE LABELS ALONG WITH "M" STAMP OF THE PERSON PERFORMING THE OVERHAUL. | / | C | / |
| | | COORDINATION<br><br>MABEBS PHYLLIS BLALD 23 MARCH 89<br><br>MABSCS CONNIE WEBBER 22 MARCH 89<br><br>MABPAB JESSIE JACOBS 22 MARCH 89<br><br>MADDI [illegible] MARCH 89 | | | |

15150 A

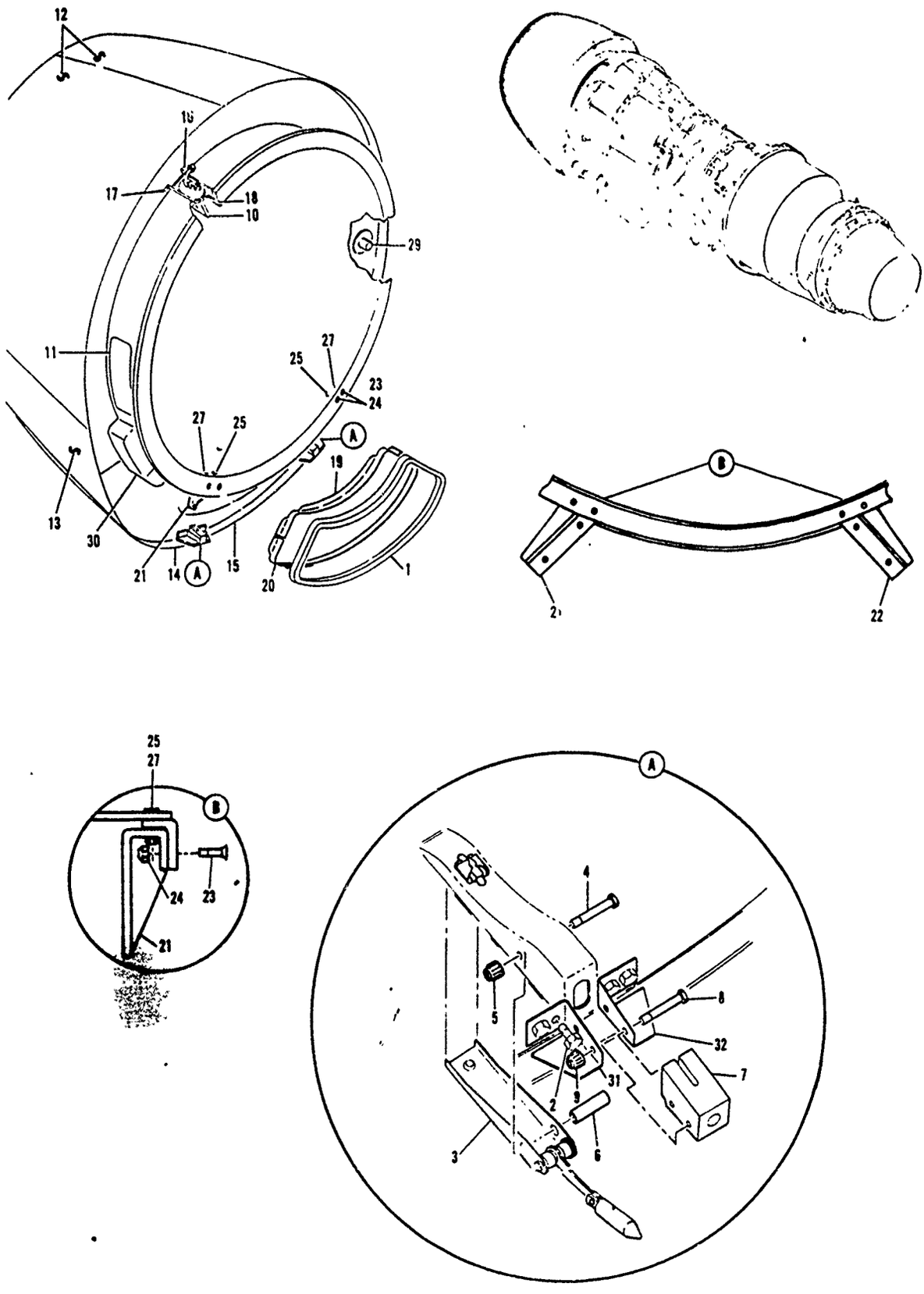


Figure 4-24. Nose Cowl Assembly

| FIGURE & INDEX NO. | PART NUMBER | DESCRIPTION 1 2 3 4 5 6 7 | PER ASSY | UN CODE |
|---|---|---|---|---|
| 4-24 | 5-85655-150 | COWL ASSY, Engine nacelle nose (see figure 4-2, index 5) | Ref | |
| | 5-85655-811 | . DUCT ASSY | 1 | |
| -1 | 60-5176 | . SEAL | 1 | |
| -2 | NAS1103-3DW | . BOLT (For replacement order BACB30NF3D3) | 8 | |
| -3 | 90-3588-4 | . LATCH ASSY, Engine cowl panel safety (optional 90-3588) | 2 | |
| | | (ATTACHING PARTS) | | |
| -4 | NAS1303-16 | . BOLT (Replaces AN3-13A, (for replacement order BACB30NF3-16) | 2 | |
| -5 | MS21042L3 | . NUT, Self-locking 500°F (replaces NAS679A3W) (for replacement order BACN10JC3) | 2 | |
| -6 | NAS43-3-65 | . SPACER (For replacement order NAS43HT-3-65) | 2 | |
| -7 | 60-5700 | . FITTING, Engine cowl safety latch | 2 | |
| | | (ATTACHING PARTS) | | |
| -8 | NAS1303-14 | . BOLT (Replaces AN3-12A) (for replacement order. BACB30NF3-14) | 1 | |
| -9 | MS21042L3 | . NUT, Self-locking 500°F (replaces NAS679A3W) (for replacement order BACN10JC3) | 1 | |
| -10 | 65-63031-501 | . PROBE ASSY, Engine inlet pressure (optional 69-1570-8, 69-1570, 65-63031; 65-63031-9 use until exhaust d) | | |
| -11 | BACM10B62-9DK | . METAL-CAL | 1 | |
| -12 | 5-85655-6 | . SKIN ASSY, Outer | 2 | |
| -13 | 5-85655-3 | . SKIN ASSY, Outer | 1 | |
| | 5-85655-4 | . SKIN ASSY, Outer (opposite 5-85655-3) | 1 | |
| | 5-85655-2 | . SKIN ASSY, Lower forward | 1 | |
| -14 | 5-85655-8 | . SPIN, Lower forward | 1 | |
| -15 | 5-85655-5 | . SKIN ASSY, Lower aft | 1 | |
| -16 | 5-85655-148 | . BRACKET | 1 | |
| -17 | 5-85655-149 | . CLIP | 1 | |
| -18 | 66-20097 | . STIFFENER, Probe support | 1 | |
| -19 | 5-85655-94 | . RETAINER Seal | 1 | |
| -20 | 5-85655-95 | . RETAINER, Seal | 1 | |
| -21 | 50-9571-7 | . FITTING ASSY, Oil cooler support | 1 | |
| -22 | 50-9571-8 | . FITTING ASSY, Oil cooler support | 1 | |
| | | (ATTACHING PARTS) | | |
| -23 | NAS1503-12 | . BOLT, Nose cowl fitting | 8 | |
| -24 | MS21042L3 | . NUT (Replaces NAS679A3W) (optional BACN10JC3) | 8 | |
| -25 | (a) NAS1456-4 | . PIN, Swage locking (optional BACB30GX6-4) | 4 | |
| -26 | (a) NAS1080-6 | . COLLAR, Swage locking (optional NAS1080R6) | 4 | |
| -27 | (b) HL21PB6-4 | . HI-LOCK FASTENER (73197) | 4 | |
| -28 | (b) HL86PB6 | . COLLAR (Optional HL86PBW6) | 4 | |
| -29 | 90-6964 | . EJECTOR ASSY, Nose cowl anti-ice | 1 | |
| -30 | 50-6395 | . DUCT ASSY, Alternator exhaust | 1 | |
| -31 | 60-5199-1 | . BRACKET | 2 | |
| -32 | 60-5199-2 | . BRACKET | 2 | |

(a) Used on inboard position at field level repair.
(b) Optional on outboard side of each bracket when replaced at field level.

# FLOW PROCESS CHART

SUBJECT Nose Cowl Assembly DATE 4/4/89

PCN: 15150A WCD: 15150A WCDDATE: 88054

CHART BEGINS

CHART ENDS PREPARED BY: Tim Hall

| SYMBOLS | DESCRIPTION | SYMBOLS | DESCRIPTION |
|---|---|---|---|
| 010 ● ⇨ D □ ▽ | Receive & Uncrate 2122 MABPCD | 160 ● ⇨ D □ ▽ | Replace outer skins 5-85655-3 MBPAB |
| ○ ⇨ ● □ ▽ | Delay | 170 ● ⇨ D □ ▽ | Replace outer skin 5-85655-4 |
| ○ ● D □ ▽ | Move To MABPCA 2122 MABPCA | 180 ● ⇨ D □ ▽ | Replace outer skin 5-85655-2 |
| ○ ⇨ ● □ ▽ | Delay | 190 ● ⇨ D □ ▽ | Replace outer skin 5-85655-13 |
| 020 ● ⇨ D □ ▽ | Wash | 200 ● ⇨ D □ ▽ | " 5-85655-14 |
| 021 ● ⇨ D □ ▽ | Strip | 210 ● ⇨ D □ ▽ | Repair Webs |
| ○ ⇨ ● □ ▽ | Delay | 220 ● ⇨ D □ ▽ | Repair Frame 5-85655-123 |
| ○ ● D □ ▽ | Move To Bldg 95 95 MABPAB | 230 ● ⇨ D □ ▽ | Replace Frame 5-85655-123 |
| ○ ⇨ ● □ ▽ | Delay | 240 ● ⇨ D □ ▽ | Remove Corrosion & Treat |
| 025 ● ⇨ D □ ▽ | Position on Fixture | 250 ● ⇨ D □ ▽ | Repair Anti-ice manifold |
| 030 ● ⇨ D □ ▽ | Shakedown | 260 ● ⇨ D □ ▽ | Repair Latches |
| ○ ⇨ ● □ ▽ | Delay | 270 ● ⇨ D □ ▽ | Replace Latches if cracks are Found |
| 040 ○ ⇨ D ■ ▽ | Inspect - Flourescent Bldg 95 MAQCIA | 280 ● ⇨ D □ ▽ | Replace Latches if wear exceeds limits |
| ○ ⇨ ● □ ▽ | Delay | 290 ● ⇨ D □ ▽ | Repair dents in nose cowl |
| 050 ● ⇨ D □ ▽ | Treat For Corrosion MABPAB | 300 ● ⇨ D □ ▽ | Replace bad, loose, missing or defective Fasteners |
| 060 ● ⇨ D □ ▽ | Replace Inner Skin | 310 ● ⇨ D □ ▽ | Measure and Trim aftend of outer skins |
| 061 ● ⇨ D □ ▽ | Replace Former P/N | 320 ● ⇨ D □ ▽ | Place in Fixture |
| 062 ● ⇨ D □ ▽ | Replace Structural Plate | 325 ● ⇨ D □ ▽ | Replace ejector |
| 063 ● ⇨ D □ ▽ | Replace airduct bulkhead | 330 ● ⇨ D □ ▽ | Install Access Covers |
| [illegible] ● ⇨ D □ ▽ | Replace Duct Assy | 340 ● ⇨ D □ ▽ | Repair Lap strips |
| [illegible] ● ⇨ D □ ▽ | Repair Attachment Ring | 350 ● ⇨ D □ ▽ | Replace Lap strips |
| 08[illegible] ● ⇨ D □ ▽ | Replace attach. ring | 360 ● ⇨ D □ ▽ | Replace seal |
| 090 ● ⇨ D □ ▽ | Repair oil cooler Tab attach hole | 370 ● ⇨ D □ ▽ | Remove all foreign objects |
| 100 ● ⇨ D □ ▽ | Replace oil cooler support Fittings | ○ ⇨ ● □ ▽ | Delay |
| 110 ● ⇨ D □ ▽ | Repair Probe, pressure check remove nicks & burrs | ○ ● D □ ▽ | Move To Bldg 2280 2280 MABPCB |
| 120 ○ ⇨ D ■ ▽ | Inspect probe w/vacuum | ○ ⇨ ● □ ▽ | Delay |
| 130 ● ⇨ D □ ▽ | Replace probe, pressure check | 380 ● ⇨ D □ ▽ | Final Wash |
| 140 ● ⇨ D □ ▽ | Replace outer skin P/N 5-85655-5 | 385 ● ⇨ D □ ▽ | Final Corrosion Treat |
| 150 ● ⇨ D □ ▽ | Replace outer skin P/N 5-85655-6 | 390 ● ⇨ D □ ▽ | Paint & Apply Finish |

# FLOW PROCESS CHART

SUBJECT Nose Cowl Assembly DATE 4/4/89

PCN: 15150A WCD: 15150A WCDDATE: 88054

CHART BEGINS Operation 10

CHART ENDS operation 420 PREPARED BY: Tim Hall

| SYMBOLS | DESCRIPTION | SYMBOLS | DESCRIPTION |
|---|---|---|---|
| | Delay 2220 MARPLA | | |
| | Move to 9S 9S MARPAR | | |
| | Delay | | |
| HD | Apply identification, markings & decals | | |
| HD | Apply scotch tape to spraying surface | | |
| 420 | Condition Tag | | |
| | | | |
| | | | |
| |

15150A * WORK CONTROL DOCUMENT * MSTR 1.DATE 89054 PAGE 1 OF 5 PAGES

| 2.ORIG/PROD NR | 3.QUANTITY | 4.PROD SECTION/RLC | 5.DATE SCHED | 6.DATE COMP |
|---|---|---|---|---|
| 15150A | | MBPAB | 89093 | |

| 7.PART NUMBER | 9.ITEM SERIAL NR | 10/12.TECH DATA/OPTIONAL |
|---|---|---|
| 5-85655-150 | | SOW OC/1560FL/85-61, DTD 24 OCT 84 |

| 10.MODEL/DESIGN/SERIES | 11.STOCK NR |
|---|---|
| KC 135 | 1560006067420FL |

| 13.MISC | 14.NOUN/END ITEM NOUN |
|---|---|
| | NOSE COWL ASSY |
| | 15. NULLINAX/MABEBS/65266 |

| 15.DISP STATION | 16.PDN/OP NO. | 17.WORK TO BE ACCOMPLISHED | 18.MISC | 19.[illegible] | 20.[illegible] |
|---|---|---|---|---|---|
| 2122 | 010 MBPCD | RECEIVE, IDENTIFY & UNCRATE. NOSE COWL | | / | / |
| 2122 | 020 MBPCA | WASH INT & EXT IAW T.O. KC 135(K) A-3-4 PARA 11-7 & SOW OC/1560FL 85-61 | | / | / |
| 2122 | 021 MBPCA | STRIP INT & EXT SURFACES OF NOSE COWL IAW T.O.KC 135(K)A-3-4 PARA 11-13 THRU 11-15 & SOW 85-61. REQD_____ NOT REQD_____ MOVE TO MBPAB | | / | / |
| 95 | 025 MBPAB | POSITION NOSE COWL ON FIXTURE P/N 5-85655-0 CHECK RING FLATNESS IAW SOW OC 1560 85-61 | | / | / |
| 95 | 030 MBPAB | SHAKEDOWN AS PER SOW OC/1560FL/85-61 SEC III | | / | / |
| 95 | 040 MQCIA | PERFORM FLOURESCENT PENETRANT INSP IAW SOW OC/1560FL/85-61, SEC III | / | N | / |
| 95 | 050 MBPAB | CORROSION TREAT IAW SOW OC 1560 85-61 & T.O. 1C-135(K)A-3-4 SEC 4. | | / | / |
| 95 | 060 MBPAB | REPLACE INNER SKIN IAW SOW OC/1560FL/85-61, SEC III REQD_____ NOT REQD_____ | | E | / |
| 95 | 061 MBPAB | REPLACE FORMER P/N 5-85655-127 REQD_____NOT REQD_____ | | / | / |
| 95 | 062 MBPAB | REPLACE STRUCTURAL PLATE P/N 5-85655-147 REQD_____NOT REQD_____ | | / | / |
| 95 | 063 MBPAB | REPLACE AIRDUCT BULKHEAD P/N 5-85655-118 REQD NOT REQD_____ | | / | / |
| 95 | 064 MBPAB | REPLACE DUCT ASSY P/N 50-6395 REQD_____ NOT [illegible] | | / | |
| 95 | 070 MBPAB | REPAIR AT [illegible] 1C-135(K)A-3-3 | | / | / |

(CONTINUED)

| 15.DISP-STATION | 16.PDN/OP NO. | 17.WORK TO BE ACCOMPLISHED | 18.MECH | 19"P" | 20"Q" |
|---|---|---|---|---|---|
| | | REQD_____ NOT REQD_____ | | | |
| 95 | 080 MBPAB | REPLACE ATTACH RING IAW SOW OC/1560FL/85 61, SEC III . USE "Z" FIXTURE TO LOCATE RING. REQD_____ NOT REQD_____ | | E | / |
| 95 | 090 MBPAB | REPAIR OIL COOLER TAB ATTACH HOLE OC/150FL/85-61, SEC III & T.O. 1C-135(K)A-3-1 REQD_____ NOT REQD_____ | | / | / |
| 95 | 100 MBPAB | REPLACE OIL COOLER SUPPORT FITTINGS AND CHECK LOCATION OF MOUNT HOLES IN RING IAW SOW OC/1560FL/85-61, SEC III | | / | / |
| 95 | 110 MBPAB | REPAIR PROBE (PT2) PRESSURE CHECK, REMOVE NICKS & BURRS IAW SOW OC/1560FL/85-61, SEC III REQD_____ NOT REQD_____ | | / | / |
| 95 | 120 MBPAB | CHECK PROBE (PT2) WITH VACUUM IAW SOW OC/1560FL/85-61, SEC III | | / | / |
| 95 | 130 MBPAB | REPLACE PROBE (PT2) PRESSURE CHECK IAW SOW OC/1560FL/85-61, SEC III REQD_____ NOT REQD_____ | | / | / |
| 95 | 140 MBPAB | REPLACE OUTER SKIN, P/N 5 85655-5 IAW SOW OC/1560FL/85-61, SEC III REQD_____ NOT REQD_____ | | E | / |
| 95 | 150 MBPAB | REPLACE OUTER SKIN P/N 5 85655-6 IAW SOW OC/1560FL/85-61, SEC III REQD_____ NOT REQD_____ | | / | / |
| 95 | 155 MBPAB | REPLACE SKIN ~~P/N~~ 5-85655-6 (same part no. as #150, but there are two skins) REQD---- ~~NOT~~ REQD---- | | / | / |
| 95 | 160 MBPAB | REPLACE OUTER SKINS, P/N 5-85655-3 IAW SOW OC/1560FL/85-61, SEC III REQD_____ NOT REQD_____ | | / | / |
| 95 | 170 MBPAB | REPLACE OUTER SKIN P/N 5-85655-4 IAW SOW OC/1560FL/85-61, SEC III REQD_____ NOT REQD_____ | | E | / |
| 95 | 180 MBPAB | REPLACE OUTER SKIN P/N 5-85655-2 IAW SOW OC/1560FL/85 61, SEC III REQD_____ NOT REQD_____ | | / | / |
| 95 | 190 MBPAB | REPLACE OUTER SKIN P/N 5-85655-13 IAW SOW OC/1560FL/85 861, SEC III REQD_____ NOT REQD_____ | | / | / |
| 95 | 200 MBPAB | REPLACE OUTER SKIN P/N 5-85655-14 IAW SOW OC/1560FL/85-61, SEC III | | / | / |

(CONTINUED)

| 15150A * WORK CONTROL DOCUMENT * MISTR 1.DATE 08054 | PAGE 3 OF 5 PAGES |
|---|---|
| 15.DISP-16.PDN/ | |

| STATION | OP NO. | 17.WORK TO BE ACCOMPLISHED | 18.MECH | 19"P" | 20"Q" |
|---|---|---|---|---|---|
| | | REQD_____ NOT REQD_____ | | | |
| 95 | 210 MBPAB | REPAIR WEBS IAW SOW OC/1560FL/85-61, SEC III<br>REQD_____ NOT REQD_____ | | / | / |
| 95 | 220 MBPAB | REPAIR FRAME, P/N 5-85655-123 IAW SOW OC/1560FL/85-61, SEC III<br>REQ'D_____NOT REQ'D_____ | | / | / |
| 95 | 230 MBPAB | REPLACE FRAME, P/N 5-85655-123 IAW SOW OC/1560FL/85-61, SEC III<br>REQD_____ NOT REQD_____ | | / | / |
| 95 | 240 MBPAB | REMOVE CORROSION & TREAT IAW SOW OC/1560FL/85-61, SEC III<br>REQD_____ NOT REQD_____ | | / | / |
| 95 | 250 MBPAB | REPAIR ANTI-ICE MANIFOLD IAW SOW OC/1560FL/85-61, SEC III<br>REQD_____ NOT REQD_____ | | / | / |
| 95 | 260 MBPAB | REPAIR LATCHES IAW SOW OC/1560FL/85-61, SEC III<br>REQD_____ NOT REQD_____ | | / | / |
| 95 | 270 MBPAB | REPLACE LATCHES IF CRACKS ARE FOUND IAW SOW OC/1560FL/85-61, SEC III<br>REQD_____ NOT REQD_____ | | / | / |
| 95 | 280 MBPAB | REPLACE LATCHES IF WEAR EXCEEDS LIMITS AS STATED IN SOW OC/1560FL/85-61, SEC III<br>REQD_____ NOT REQD_____ | | / | / |
| 95 | 290 MBPAB | REPAIR DENTS IN NOSE COWL IAW SOW OC/1560FL/85-61, SEC III<br>REQD_____ NOT REQD | | E | / |
| 95 | 300 MBPAB | REPLACE BAD, LOOSE, MISSING OR DEFETIVE FASTENERS IAW SOW OC/1560FL/85-61, SEC III<br>REQD_____ NOT REQD_____ | | / | / |
| 95 | 310 MBPAB | MEASURE AND TRIM AFT END OF OUTER SKINS USE LOCAL MFG FIXTURE.<br>REQD_____ NOT REQD_____ | | / | / |
| 95 | 320 MBPAB | PLACE NOSE COWL IN FIXTURE, P/N 5-85655-0 AND PERFORM FINAL CHECKS IAW SOW OC/1560FL/85-61, SEC III | | E | / |
| 95 | 325 MBPAB | REPLACE EJECTOR P/N 20-02x4<br>REQD-----NOT REQD- | | / | / |

15150A * WORK CONTROL DOCUMENT * MDYR 1.DATE 08054 PAGE 4 OF 5 PAGES

| 15.DISP-16.PDN/ STATION | OP NO. | 17.WORK TO BE ACCOMPLISHED | 18.MECH | 19"P" | 20"W" |
|---|---|---|---|---|---|
| 95 | 330 MBPAB | INSTALL ACCESS COVERS ON NOSE COWL. | | / | / |
| 95 | 340 MBPAB | REPAIR LAP STRIPS IAW SOW OC/1560FL/85-61, SEC III REQD_____ NOT REQD_____ | | / | |
| 95 | 350 MBPAB | REPLACE LAP STRIP IAW SOW OC/1560FL/85-61, SEC III REQD_____ NOT REQD_____ | | / | / |
| 95 | 360 MBPAB | REPLACE SEAL (O). (SEALER) REQD_____ NOT REQD_____ | | / | |
| 95 | 370 MBPAB | REMOVE ALL FOREIGN OBJECTS | | L | / |
| 2280 | 380 MBPCB | FINAL WASH IAW SOW OC/1560FL/85-61, SEC III | | / | / |
| 2280 | 385 MBPCB | FINAL CORROSION TREAT IAW SOW OC/1560FL/85-61 & T.O. 1C-135(K)A-3-4, SEC 4. | | / | / |
| 2280 | 390 MBPCB | PAINT & APPLY FINISH IAW SOW OC/1560FL/85-61, SEC III | | / | / |
| 95 | 400 MBPAB | APPLY IDENTIFICATION & MARKINGS AND DECALS IAW SOW OC/1560FL/85-61, SEC III | | / | / |
| 95 | 410 MBPAB | APPLY SCOTCH TAP #350 TO PAINTING SURFACE IAW T.O. 1C-135(K)A-3-1, SEC I | | L | / |
| 95 | 420 MBPAB | WORK COMPLETE, CONDITION TAG IAW AFM 67-1, MOVE TO CRATING | | L | / |
| 95 | 430 MBPAB | PARTS WILL HAVE OC ALC FORM 586, 587 OR 588 IDENTIFICATION LABELS APPLIED TO COMPLETED ITEM IAW MAOI 66-36.<br><br>ACCEPTANCE DATE ON THE LABEL ALONG WITH "P" STAMP OF THE PERSON PERFORMING THE OVERHAUL.<br>CAUTION: SURFACES TO WHICH LABELS ARE APPLIED MUST BE FREE OF CONTAMINATION.<br>NOTE: COMPLETE "REMARKS" COLUMN OF AFLC FORM 1574 IAW MAOI 66-36.<br>NOTE #2: 00J10 SUPPORT 00B10 MFG DOUBLERS, SHIMS, CLIPS, SPACERS & ETC AS REQD W/B SKILL. | | L | / |

15150A * WORK CONTROL DOCUMENT - MISTR 1.DATE 00054 PAGE [illegible]
15.DISP-16.PDN

| STATION | OP NO. | 17.WORK TO BE ACCOMPLISHED | 18.MECH | 19 [illegible] | 20 [illegible] |
|---|---|---|---|---|---|
| | | COORDINATION: DATE: | | | |
| | | MABEBS LARRY MULLINAX 3-21-89 | | | |
| | | MAQBF TED HAYES 3-21-89 | | | |
| | | MABSCS H. NGUYEN 3-21-89 | | | |
| | | MABPAB D. LENOX 3-21-89 | | | |

# Wing Control Surfaces

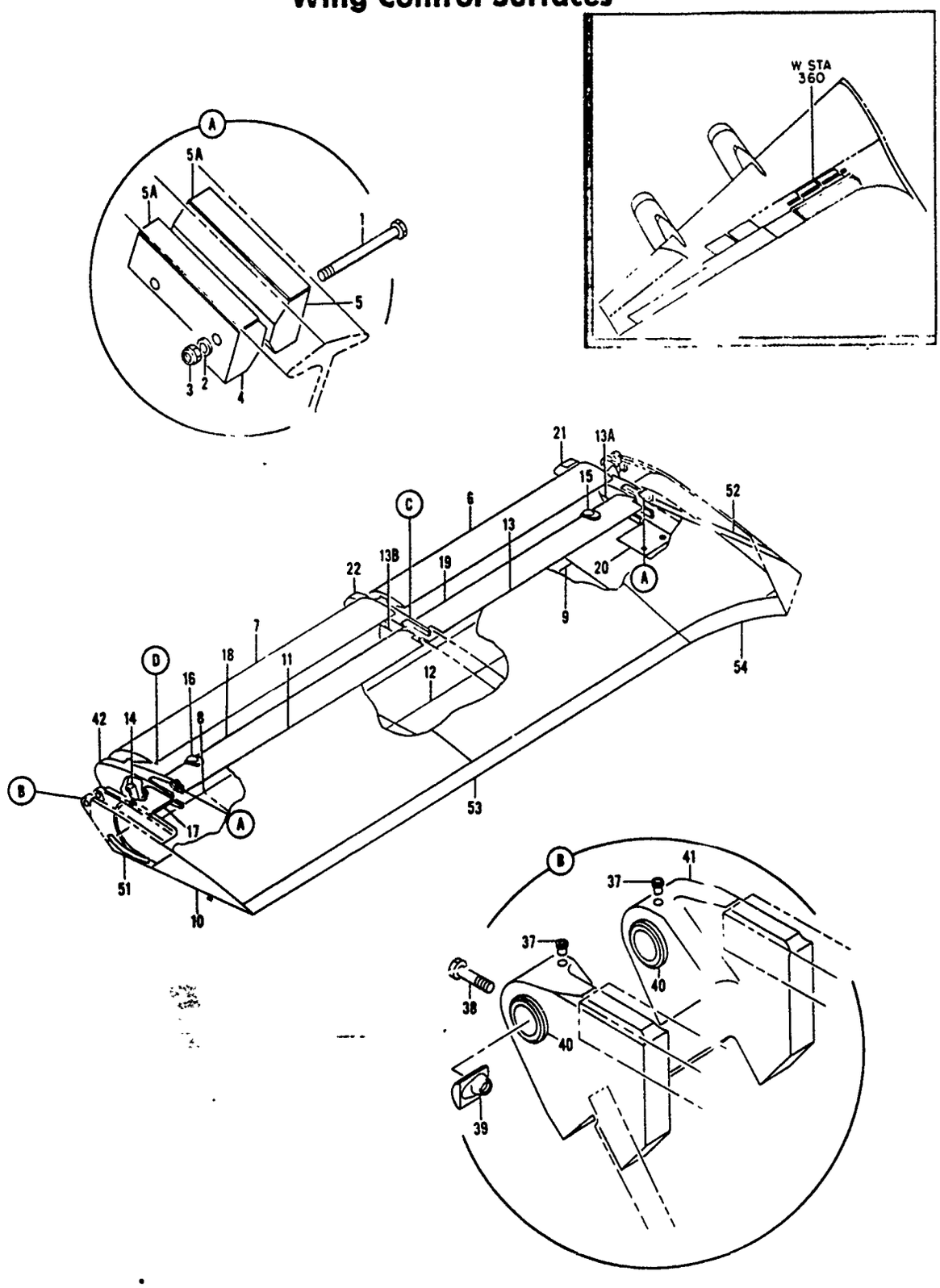


3153-48a

*Figure 48. Inboard Flap Installations (Sheet 1 of 2)*

# Wing Control Surfaces

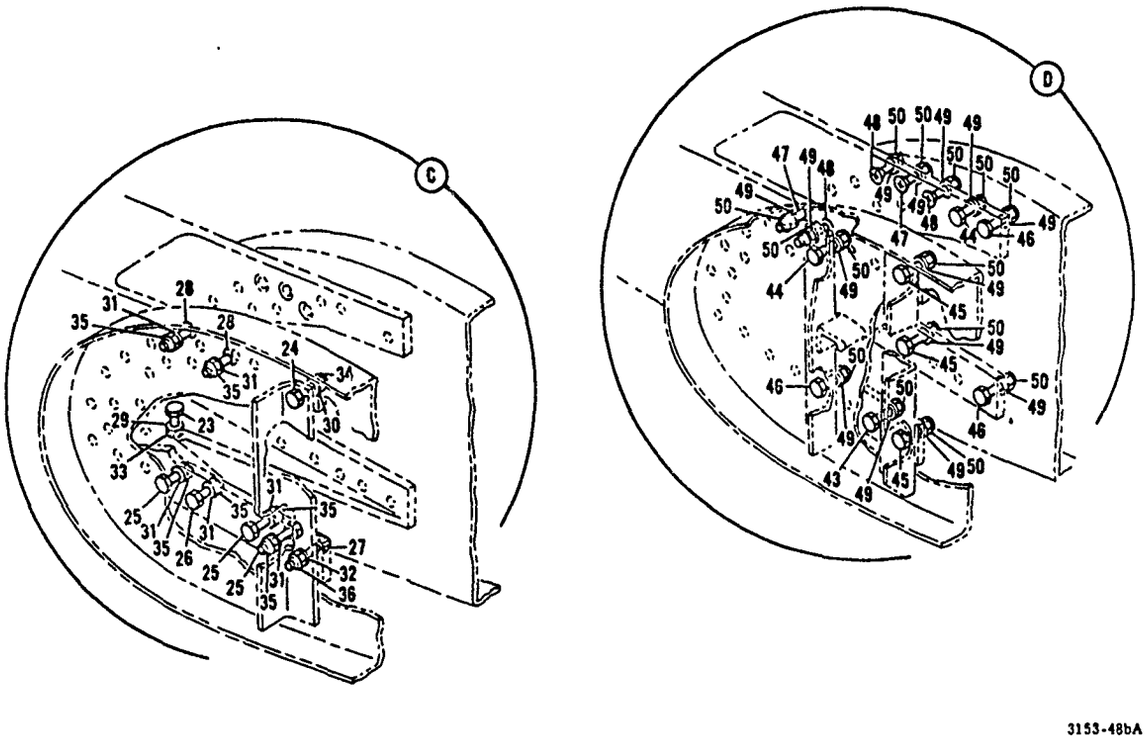


*Figure 48. Inboard Flap Installations (Sheet 2 of 2)*

| FIGURE & INDEX NO | PART NUMBER | 1 2 3 4 5 6 7 DESCRIPTION | UNITS PER ASSY | USE ON CODE |
|---|---|---|---|---|
| 48 - | | | | |
| | 5-73131-1 | FLAP INSTL, INBOARD (LH) (FOR NHA SEE FIG. 2) . . . . . | REF | |
| | 5-73131-2 | FLAP INSTL, INBOARD (RH) (FOR NHA SEE FIG. 2) . . . . . | REF | |
| | 5-96315 | . STOP INSTL, DOWN POSITION, INBOARD AND OUTBOARD FLAP | 2 | |
| 1 | NAS464P4A25 | . . BOLT (FOR REPLACEMENT ORDER NAS1104-25) . . . . . | 2 | |
| 2 | AN960D416L | . . WASHER . . . . . | 2 | |
| 3 | NAS679A4W | . . NUT (FOR REPLACEMENT ORDER 96-048 (56878) (80539) . H10-48AC (15653) T6S428J (71087) RMLH9075-4W (72962) (BACN10JC4)) | 2 | |
| 4 | 3-93742-3 | . . STOP, DOWN POSITION, INBOARD AND OUTBOARD FLAP . . | 1 | |
| 5 | 3-93742-4 | . . STOP, DOWN POSITION, INBOARD AND OUTBOARD FLAP . . | 1 | |
| 5A | BACS40A7-37 | . . SHIM, LAM, 0.030 THK (ALTERNATES BACS4087-37, . . . BACS40C7-37) | AR | |
| | 5-86892-129 15191A | . FLAP ASSY, INBOARD (ALTERNATE, ANY AIR FORCE SPARE . FLAP ASSEMBLY (5-86892-()) LH FOR LH INSTALLATION INCORPORATING ALL APPLICABLE TECHNICAL ORDERS) (LH ONLY) | 1 | |
| | 5-86892-130 15192A | . FLAP ASSY, INBOARD (ALTERNATE, ANY AIR FORCE SPARE . FLAP ASSEMBLY (5-86892-()) RH FOR RH INSTALLATION INCORPORATING ALL APPLICABLE TECHNICAL ORDERS) (RH ONLY) | 1 | |
| 6 | 65-7360-1 | . . FLAP ASSY, FORE (LH ONLY) (FOR REPLACEMENT ORDER . 65-7360-3137) (FOR BREAKDOWN SEE FIG. 56) | 1 | A |
| | 65-7360-2 | . . FLAP ASSY, FORE (RH ONLY) (FOR REPLACEMENT ORDER . 65-7360-3138) (FOR BREAKDOWN SEE FIG. 56) | 1 | A |
| 7 | 65-7360-3 | . . FLAP ASSY, FORE (LH ONLY) (FOR REPLACEMENT ORDER . 65-7360-3135) (FOR BREAKDOWN SEE FIG. 57) | 1 | A |
| | 65-7360-4 | . . FLAP ASSY, FORE (RH ONLY) (FOR REPLACEMENT ORDER . 65-7360-3136) (FOR BREAKDOWN SEE FIG. 57) | 1 | A |
| | | (ATTACHING PARTS) | | |
| | AN4-10A | . . BOLT (FOR REPLACEMENT ORDER BAC830NE4-9) . . . . . | 16 | |



C/N 15191A
15192A

| FIGURE & INDEX NO. | PART NUMBER | 1 2 3 4 5 6 7 DESCRIPTION | UNITS PER ASSY | USE ON CODE |
|---|---|---|---|---|
| 48 - | | | | |
| | AN960D416 | . . WASHER. . . . . | 16 | |
| | AN960PD416L | . . WASHER. . . . . | AR | |
| | | ---------*--------- | | |
| 8 | 5-88721-23 | . . PANEL ASSY, HONEYCOMB, INBOARD FLAP SKIN, LOWER . . . FORWARD OUTBOARD HALF (I/W 5-88721-15) (USE 5-88721-15 UNTIL EXHAUSTED) (LH ONLY) | 1 | F |
| 8 | 5-88721-15 | . . PANEL ASSY, HONEYCOMB, INBOARD FLAP SKIN, LOWER . . . FORWARD OUTBOARD HALF (FOR I/W INFO SEE 5-88721-23) (ALTERNATE 5-88721-23) (LH ONLY) | 1 | G |
| | 5-88721-24 | . . PANEL ASSY, HONEYCOMB, INBOARD FLAP SKIN, LOWER . . . FORWARD OUTBOARD HALF (I/W 5-88721-16) (USE 5-88721-16 UNTIL EXHAUSTED) (RH ONLY) | 1 | F |
| | 5-88721-16 | . . PANEL ASSY, HONEYCOMB, INBOARD FLAP SKIN, LOWER . . . FORWARD OUTBOARD HALF (FOR I/W INFO SEE 5-88721-24) (ALTERNATE 5-88721-24) (RH ONLY) | 1 | G |
| 9 | 5-88720-23 | . . PANEL ASSY, HONEYCOMB, INBOARD FLAP SKIN, LOWER . . . FORWARD INBOARD HALF (I/W 5-88720-15) (USE 5-88720-15 UNTIL EXHAUSTED) (LH ONLY) | 1 | F |
| 9 | 5-88720-15 | . . PANEL ASSY, HONEYCOMB, INBOARD FLAP SKIN, LOWER . . . FORWARD INBOARD HALF (FOR I/W INFO SEE 5-88720-23) (ALTERNATE 5-88720-23) (LH ONLY) | 1 | G |
| | 5-88720-24 | . . PANEL ASSY, HONEYCOMB, INBOARD FLAP SKIN, LOWER . . . FORWARD INBOARD HALF (I/W 5-88720-16) (USE 5-88720-16 UNTIL EXHAUSTED) (RH ONLY) | 1 | F |
| | 5-88720-16 | . . PANEL ASSY, HONEYCOMB, INBOARD FLAP SKIN, LOWER . . . FORWARD INBOARD HALF (FOR I/W INFO SEE 5-88720-24) (ALTERNATE 5-88720-24) (RH ONLY) | 1 | G |
| 10 | 50-4669-11 | . . PANEL ASSY, SKIN, HONEYCOMB, LOWER OUTBOARD HALF, . . INBOARD FLAP (LH ONLY) (FOR REPLACEMENT ORDER 50-4669-3020) | 1 | F |
| 10 | 50-4669-1 | . . PANEL ASSY, SKIN, HONEYCOMB, LOWER OUTBOARD HALF, . . INBOARD FLAP (ALTERED FROM 50-4669) (FOR REPLACEMENT ORDER 50-4669-3020) (LH ONLY) | 1 | G |
| | 50-4669-12 | . . PANEL ASSY, SKIN, HONEYCOMB, LOWER OUTBOARD HALF, . . INBOARD FLAP (FOR REPLACEMENT ORDER 50-4669-3020) (RH ONLY) | 1 | F |
| | 50-4669-2 | . . PANEL ASSY, SKIN, HONEYCOMB, LOWER OUTBOARD HALF, . . INBOARD FLAP (FOR REPLACEMENT ORDER 50-4669-3020) (RH ONLY) | 1 | G |
| 11 | 50-4669-13 | . . PANEL ASSY, SKIN, HONEYCOMB, UPPER OUTBOARD HALF, . . INBOARD FLAP (FOR REPLACEMENT ORDER 50-4669-3020) (LH ONLY) | 1 | F |
| 11 | 50-4669-3 | . . PANEL ASSY, SKIN, HONEYCOMB, UPPER OUTBOARD HALF, . . INBOARD FLAP (FOR REPLACEMENT ORDER 50-4669-3020) (LH ONLY) | 1 | G |
| | 50-4669-14 | . . PANEL ASSY, SKIN, HONEYCOMB, UPPER OUTBOARD HALF, . . INBOARD FLAP (FOR REPLACEMENT ORDER 50-4669-3020) (RH ONLY) | 1 | F |
| | 50-4669-4 | . . PANEL ASSY, SKIN, HONEYCOMB, UPPER OUTBOARD HALF, . . INBOARD FLAP (FOR REPLACEMENT ORDER 50-4669-3020) (RH ONLY) | 1 | G |
| 12 | 50-4668-11 | . . PANEL ASSY, SKIN, HONEYCOMB, LOWER INBOARD HALF, . . INBOARD FLAP (FOR REPLACEMENT ORDER 50-4668-3022) (LH ONLY) | 1 | F |
| 12 | 50-4668-1 | . . PANEL ASSY, SKIN, HONEYCOMB, LOWER INBOARD HALF, . . INBOARD FLAP (FOR REPLACEMENT ORDER 50-4668-3022) (LH ONLY) | 1 | G |
| | 50-4668-12 | . . PANEL ASSY, SKIN, HONEYCOMB, LOWER INBOARD HALF, . . INBOARD FLAP (FOR REPLACEMENT ORDER 50-4668-3022) (RH ONLY) | 1 | F |
| | 50-4668-2 | . . PANEL ASSY, SKIN, HONEYCOMB, LOWER INBOARD HALF, . . INBOARD FLAP (FOR REPLACEMENT ORDER 50-4668-3022) (RH ONLY) | 1 | G |
| 13 | 50-4668-13 | . . PANEL ASSY, SKIN, HONEYCOMB, UPPER INBOARD HALF, . . INBOARD FLAP (FOR REPLACEMENT ORDER 50-4668-3022) (LH ONLY) | 1 | F |
| 13 | 50-4668-3 | . . PANEL ASSY, SKIN, HONEYCOMB, UPPER INBOARD HALF, . . INBOARD FLAP (FOR REPLACEMENT ORDER 50-4668-3022) (LH ONLY) | 1 | G |
| | 50-4668-14 | . . PANEL ASSY, SKIN, HONEYCOMB, UPPER INBOARD HALF, . . INBOARD FLAP (FOR REPLACEMENT ORDER 50-4668-3022) (RH ONLY) | 1 | F |

| FIGURE & INDEX NO. | PART NUMBER | 1 2 3 4 5 6 7 DESCRIPTION | UNITS PER ASSY | USE ON CODE |
|---|---|---|---|---|
| 48 - | | | | |
| | 50-4668-4 | . . PANEL ASSY, SKIN, HONEYCOMB, UPPER INBOARD HALF, . . INBOARD FLAP (FOR REPLACEMENT ORDER 50-4668-3022) (RH ONLY) | 1 | G |
| 13A | 69-18412-1 | . . . DEPRESSOR ASSY, SEAL, INBOARD FLAP, WING STATION. . 287.63 (LH ONLY) | 1 | C |
| | 69-18412-2 | . . . DEPRESSOR ASSY, SEAL, INBOARD FLAP, WING STATION. . 287.63 (RH ONLY) | 1 | C |
| 13B | 69-18413-6 | . . . DEPRESSOR ASSY, SEAL, INBOARD FLAP, WING STATION. . 360.0 (SUITABLE SUB. FOR 69-18413-1) | 1 | F |
| 13B | 69-18413-1 | . . . DEPRESSOR ASSY, SEAL, INBOARD FLAP, WING STATION. . 360.0 (WHEN EXHAUSTED USE 69-18413-6) | 1 | H |
| 14 | 69-18414-11 | . . . DEPRESSOR ASSY, SEAL, INBOARD FLAP, WING STATION. . 444.0 (SUITABLE SUB. FOR 69-18414-1) (LH ONLY) | 1 | F |
| 14 | 69-18414-1 | . . . DEPRESSOR ASSY, SEAL, INBOARD FLAP, WING STATION. . 444.0 (WHEN EXHAUSTED USE 69-18414-11) (LH ONLY) | 1 | H |
| | 69-18414-12 | . . . DEPRESSOR ASSY, SEAL, INBOARD FLAP, WING STATION. . 444.0 (SUITABLE SUB. FOR 69-18414-2) (RH ONLY) | 1 | F |
| | 69-18414-2 | . . . DEPRESSOR ASSY, SEAL, INBOARD FLAP, WING STATION. . 444.0 (WHEN EXHAUSTED USE 69-18414-12) (RH ONLY) | 1 | H |
| 15 | 69-9610-3 | . . CAM ASSY, INBOARD FLAP, STATION 419.95 (LH ONLY). . . | 1 | |
| | 69-9610-4 | . . CAM ASSY, INBOARD FLAP, STATION 419.95 (RH ONLY). . . | 1 | |
| 16 | 69-9611-3 | . . CAM ASSY, INBOARD FLAP, STATION 300.05 (LH ONLY). . . | 1 | |
| | 69-9611-4 | . . CAM ASSY, INBOARD FLAP, STATION 300.05 (RH ONLY). . . | 1 | |
| 17 | 5-86892-25 | . . SKIN, OUTBOARD NOSE, INBOARD FLAP (LH ONLY) . . . . . | 1 | |
| | 5-86892-26 | . . SKIN, OUTBOARD NOSE, INBOARD FLAP (RH ONLY) . . . . . | 1 | |
| 18 | 5-86892-117 | . . SKIN, CENTER NOSE, INBOARD FLAP (LH ONLY) . . . . . | 1 | |
| | 5-86892-118 | . . SKIN, CENTER NOSE, INBOARD FLAP (RH ONLY) . . . . . | 1 | |
| 19 | 5-86892-115 | . . SKIN, INBOARD NOSE, INBOARD FLAP (LH ONLY). . . . . | 1 | |
| | 5-86892-116 | . . SKIN, INBOARD NOSE, INBOARD FLAP (RH ONLY). . . . . | 1 | |
| 20 | 5-86892-93 | . . SKIN, INBOARD FORWARD NOSE, INBOARD FLAP (LH ONLY). . | 1 | |
| | 5-86892-94 | . . SKIN, INBOARD FORWARD NOSE, INBOARD FLAP (RH ONLY). . | 1 | |
| 21 | 5-86894-235 | . . RIB INSTL, INBOARD ACTUATOR AND TRACK, INBOARD FLAP . (LH ONLY) (FOR BREAKDOWN SEE FIG. 50) | 1 | |
| | 5-86894-236 | . . RIB INSTL, INBOARD ACTUATOR AND TRACK, INBOARD FLAP . (RH ONLY) (FOR BREAKDOWN SEE FIG. 50) | 1 | |
| | 5-86896-75 | . . RIB INSTL, CENTER TRACK, INBOARD FLAP (LH ONLY) . . . | 1 | |
| | 5-86896-76 | . . RIB INSTL, CENTER TRACK, INBOARD FLAP (RH ONLY) . . . | 1 | |
| 22 | 5-87846-1 | . . . CARRIAGE ASSY, CENTER, INBOARD FLAP (FOR. . . . . BREAKDOWN SEE FIG. 52) (ATTACHING PARTS) | 1 | |
| 23 | NAS1103-6W | . . . BOLT (FOR REPLACEMENT ORDER NAS1103-6). . . . . | 2 | |
| 24 | NAS1105-9W | . . . BOLT (FOR REPLACEMENT ORDER NAS1105-9). . . . . | 2 | |
| 25 | NAS1104-7W | . . . BOLT (FOR REPLACEMENT ORDER NAS1104-7). . . . . | 36 | |
| 26 | NAS1104-8W | . . . BOLT (FOR REPLACEMENT ORDER NAS1104-8). . . . . | 4 | |
| 27 | NAS1105-9W | . . . BOLT (FOR REPLACEMENT ORDER NAS1105-9). . . . . | 2 | |
| 28 | NAS517-4-7 | . . . SCREW (FOR REPLACEMENT ORDER BACB30LU4-7) . . . . . | 6 | |
| 29 | AN960D10 | . . . WASHER. . . . . | 2 | |
| 30 | AN960D516 | . . . WASHER. . . . . | 2 | |
| 31 | AN960D416 | . . . WASHER. . . . . | 46 | |
| 32 | AN960D516 | . . . WASHER. . . . . | 2 | |
| 33 | NAS679A3W | . . . NUT (FOR REPLACEMENT ORDER 96-02 (56878) (80539). . H10-3BAC (15653) T6S1032J (71087) RMLH9075-3W (72962) (BACN10JC3)) | 2 | |
| 34 | MS210[illegible] | . . . NUT (REPLACES NAS679A5 OR 96-054 (56878) (80539). . H10-5BAC (15653) T6S524J (71087) RMLH9075-5W (72962) (BACN100C5)) | 2 | |
| 35 | NAS679[illegible] | . . . NUT (FOR REPLACEMENT ORDER 96-048 (56878) (80539) . H10-4BAC (15653) T6S428J (71087) RMLH9075-4W (72962) (BACN10JC4)) | 46 | |
| 36 | MS21042L5 | . . . NUT (REPLACES NAS679A5 OR 96-054 (56878) (80539). . H10-5BAC (15653) T6S524J (71087) RMLH9075-5W (72962) (BACN10JC5)) | 2 | |
| | | ---------*--------- | | |
| | 5-88108-165 | . . RIB INSTL, OUTBOARD ACTUATOR, INBOARD FLAP (LH ONLY). | 1 | |
| | 5-88108-166 | . . RIB INSTL, OUTBOARD ACTUATOR, INBOARD FLAP (RH ONLY). | 1 | |
| | 9-61951-9 | . . . FITTING ASSY, SCREW SUPPORT, FLAP . . . . . | 1 | |
| 37 | NAS516-1 | . . . . FITTING . . . . . | 2 | |
| 38 | AN4-10A | . . . . BOLT (FOR REPLACEMENT ORDER BACB30NE4-9). . . . . | 2 | |

| FIGURE & INDEX NO. | PART NUMBER | DESCRIPTION 1 2 3 4 5 6 7 | UNITS PER ASSY | USE ON CODE |
|---|---|---|---|---|
| 48 - | | | | |
| 39 | 63-1519 | . . . . NUTPLATE ASSY, CONVEX, WING FLAPS . . . . . | 2 | |
| 40 | 3-98762 | . . . . BEARING, SCREW SUPPORT, FLAP. . . . . | 2 | |
| 41 | 9-61951-11 | . . . . FITTING, SCREW SUPPORT, FLAP. . . . . | 1 | |
| | 5-87849-81 | . . RIB INSTL, OUTBOARD TRACK, INBOARD FLAP (LH ONLY) . . | 1 | |
| | 5-87849-82 | . . RIB INSTL, OUTBOARD TRACK, INBOARD FLAP (RH ONLY) . . | 1 | |
| 42 | 5-87847-3 | . . . CARRIAGE ASSY, END, INBOARD FLAP (LH ONLY) (FOR . . BREAKDOWN SEE FIG. 49) | 1 | |
| | 5-87847-4 | . . . CARRIAGE ASSY, END, INBOARD FLAP (RH ONLY) (FOR . . BREAKDOWN SEE FIG. 49) | 1 | |
| | | (ATTACHING PARTS) | | |
| 43 | NAS1104-6W | . . . BOLT (FOR REPLACEMENT ORDER NAS1104-6). . . . . | 29 | |
| 44 | NAS1104-7W | . . . BOLT (FOR REPLACEMENT ORDER NAS1104-7). . . . . | 3 | |
| 45 | NAS1104-8W | . . . BOLT (FOR REPLACEMENT ORDER NAS1104-8). . . . . | 3 | |
| 46 | NAS1104-9W | . . . BOLT (FOR REPLACEMENT ORDER NAS1104-9). . . . . | 3 | |
| 47 | NAS517-4-6 | . . . SCREW (FOR REPLACEMENT ORDER BACB30LU4-6) . . . . . | 3 | |
| 48 | NAS517-4-7 | . . . SCREW (FOR REPLACEMENT ORDER BACB30LU4-7) . . . . . | 3 | |
| 49 | AN960D416 | . . . WASHER. . . . . | 44 | |
| 50 | NAS679A4W | . . . NUT (FOR REPLACEMENT ORDER 96-048 (56878) (80539) . H10-4BAC (15653) T6S428J (71087) RMLH9075-4W (72962) (BACN10JC4)) | 44 | |
| | | ---------*--------- | | |
| 51 | 5-86892-65 | . . SEAL, MOHAIR, INBOARD FLAP (MAKE FROM 5680. . . . . BAC1523-20N X 13.3 IN. LG) (FOR I/W INFO SEE 5-86892-133) | 1 | D |
| 51 | 5-86892-133 | . . SEAL, MOHAIR, INBOARD FLAP (MAKE FROM 5680. . . . . BAC1523-20N X 13.3 IN. LG) (I/W 5-86892-65) (USE 5-86892-65 UNTIL EXHAUSTED) | 1 | E |
| 51 | 5-86892-66 | . . SEAL, MOHAIR, INBOARD FLAP (MAKE FROM 5680. . . . . BAC1523-20N X 48.9 IN. LG) (FOR I/W INFO SEE 5-86892-134) | 1 | D |
| 52 | 5-86892-134 | . . SEAL, MOHAIR, INBOARD FLAP (MAKE FROM 5680. . . . . BAC1523-20N X 48.9 IN. LG) (I/W 5-86892-66 (USE 5-86892-66 UNTIL EXHAUSTED) | 1 | E |
| | 50-4681-85 | . . TRAILING EDGE INSTL, INBOARD FLAP (LH ONLY) . . . . . | 1 | |
| | 50-4681-86 | . . TRAILING EDGE INSTL, INBOARD FLAP (RH ONLY) . . . . . | 1 | |
| 53 | 50-4681-87 | . . . TRAILING EDGE ASSY, INBOARD FLAP (LH ONLY). . . . . | 1 | |
| | 50-4681-88 | . . . TRAILING EDGE ASSY, INBOARD FLAP (RH ONLY). . . . . | 1 | |
| | | (ATTACHING PARTS) | | |
| | NAS517-3-4 | . . . SCREW (FOR REPLACEMENT ORDER BACB30LU3-4) . . . . . | 93 | |
| | NAS517-3-5 | . . . SCREW (FOR REPLACEMENT ORDER BACB30LU3-5) . . . . . | 2 | |
| | | ---------*--------- | | |
| | 4-5211-15 | . . PANEL INSTL, SKIN, INBOARD FLAP (LH ONLY) . . . . . | 1 | |
| | 4-5211-16 | . . PANEL INSTL, SKIN, INBOARD FLAP (RH ONLY) . . . . . | 1 | |
| 54 | 50-6038-29 | . . . TRAILING EDGE ASSY, INBOARD FLAP. . . . . | 1 | |

A 2201 THRU 2299, 3001 THRU 3099
B DELETED
C 2201 THRU 2299, 3029 THRU 3099
D 3001
E 2201 THRU 2299, 3002 THRU 3099
F 2201 THRU 2299
G 3001 THRU 3099
H 3029 THRU 3099

# FLOW PROCESS CHART

SUBJECT WING FLAP, INBOARD DATE 4/4/89

PCN: 15192A WCD: 15151A TAWCDDATE: 88055
15191A

CHART BEGINS 1 of 2

CHART ENDS PREPARED BY: LARRY

New Seq. on WCD

History Records

40/50 →

60 →

70 →

80 →

No change in WCD Seq.

| SYMBOLS | DESCRIPTION |
|---|---|
| 20 | Receive/Uncrate 2122 MBPCD |
| | Delay |
| | 95 Move To 95 MBPAB |
| | Delay |
| 30 40 | Remove Fore Flaps 95 MABPAB |
| 30 | Remove Honeycomb Panels / Delay |
| | Move To 2122 2122 MABPCB |
| | Delay |
| 40 | Plug Drain Holes |
| 50 | Clean & Strip W95h |
| 60 | Delay / Move To 95 95 |
| | Delay |
| 70 | Accomplish Shakedown Insp 95 MBPAB |
| | Delay |
| 80 | Accomplish NDI 95 MACIA |
| | Delay |
| | Begin Repair (Alignment Check) 95 MBPAB |
| | Repair/Replace Honeycomb Panel |
| 110 | "Rep/Rep" (-29) Trailing Edge |
| 120 | Rep / Rep" (-88) Trailing Edge |
| 130 | Rep / Rep" Inboard Skins |
| 140 | Rep/Rep Inboard Rib |
| 150 | Rep/Rep OTBD Rib & Longeron |
| 160 | Rep/Rep Lower Honeycomb Panel |
| 170 | Replace Trailing Edge Ribs |
| 180 | Replace Leading Edge Rib Web |
| 190 | Replace Leading Edge Angles, Clips & Channel |
| 200 | Replace Leading Edge Nose Skin |
| 210 | Remove Nose Skins |
| 220 | Install Lower Inboard Skin |
| 230 | Closeout Upper Inboard Skin |
| 240 | Close Out Upper Outboard Skin |
| 250 | Replace Worn Carriage Assy |
| 260 | Replace Cracked or Damaged Fairings |
| 270 | Open Fastener Holes |
| 280 | Install Lower Skin Panel |
| 290 | Install Lower Honeycomb Panel |
| 300 | Install Inner Honeycomb Panel |
| 310 | Install Wing Flap In Repair Jig 590CA1020 |
| 320 | Inspect Condition & Alignment |
| 330 | Remove Flap From Jig |
| 340 | Replace All Bad Fasteners |
| 350 | Rework Drain Holes |
| 360 | Repair Grooves In Carriage |
| 370 | Seal Flap |
| 380 | Treat External Corrosion |
| | Delay |
| | Move To 2280 |
| | Delay |
| 390 400 | Final Wash & Paint 2280 MBPCB |
| | Delay |
| | Move |
| | Delay |
| 410 | Replace Bearings (Source |

# FLOW PROCESS CHART

SUBJECT _____ DATE 4/4/89

PCN: 15191A 15192A WCD: 15151A WCDDATE: 88055

CHART BEGINS _____ 2 of 2

CHART ENDS _____ PREPARED BY: Lorey

| SYMBOLS | DESCRIPTION | SYMBOLS | DESCRIPTION |
|---|---|---|---|
| 420 ● ◇ D □ ▽ | REPLACE FOREFLAP | ○ ◇ D □ ▽ | |
| 430 ● ◇ D □ ▽ | INSTALL FOREFLAP | ○ ◇ D □ ▽ | |
| 440 ● ◇ D □ ▽ | REPLACE WORN SEALS | ○ ◇ D □ ▽ | |
| 450 ● ◇ D ■ ▽ | IDENTIFY / CONDITION TAG | ○ ◇ D □ ▽ | |
| ○ ◇ D □ ▽ |

15151A * WORK CONTROL DOCUMENT * MSTR 1.DATE 80055 PAGE 1 OF 6 PAGES

| 12.ORIG/PROD NR | 13.QUANTITY | 14.PROD SECTION/RCC | 15.DATE SCHED | 16.DATE COMP |
|---|---|---|---|---|
| | | MABPAB | 39093 | |

| 17.PART NUMBER | 19.ITEM SERIAL NR | 18/12.TECH DATA/OPTIONAL |
|---|---|---|
| | | S.O.W. DC-1560FL/82-67 |
| | | 1C-135(K)A-3-1 |
| 10.MODEL/DESIGN/SERIES | 11.STOCK NR | S.O.W. DC-1560FL/83-149 |
| C 135 | | 1C-135(K)A-3-4 |

| 15.MISC | 14.NOUN/END ITEM NOUN |
|---|---|
| | WING FLAP, INBOARD |
| | MICHAEL TYTANIC/MABER3/65261 |

| P/N | NSN | C/N |
|---|---|---|
| 5-86892 119 | | |
| 5-86892-121 | 1560006067421FL | 15151A |
| 5-86892-123 | | |
| 5-86892 120 | 1560006067422FL | 15152A |
| 5-86892 122 | 1560006210781FL | 15153A |
| 5-86892-127 | 1560006566065FL | 15184A |
| 5-86892 128 | 1560006566066FL | 15185A |
| 5-86892-130 | 1560006566201FL | 15192A |
| 5-86892-129 | 1560006566200FL | 15191A |
| 5-86892 131 | 1560006566202FL | 15193A |
| 5-86892 132 | 1560006566203FL | 15194A |
| 5-86892 136 | 1560009675260FL | 15787A |

| 15.DISP-16.PDN/STATION/OP NO. | 17.WORK TO BE ACCOMPLISHED | | 18.MECH | 19"P" | 20"Q" |
|---|---|---|---|---|---|
| 2122 / 010 MBPCD | RECEIVE AND UNCRATE. REQ'D_____ NOT REQ'D_____ | 1 | MC | / | / |
| 2122 / 020 MBPCA | CLEAN & STRIP PAINT FROM FLAP (INCLUDING FLAP TRACK WELL) IAW NOTE: ON PDM LINE GENERATED FLAP CLEAN FLAP TRACK WELL & CARRIAGE ASSYS. ASSURE ENTIRE ACCY IS FREE OF ALL DIRT, PAINT & GREASE. | 4 | 4W | / | / |
| 2122 / 030 MBPCA | PLUG ALL DRAIN HOLES TO PREVENT PAINT STRIPPER FROM ENTERING INTO INTERIOR OF ASSY. NOTE: OMIT IF PDM LINE GENERATED FLAP. | | 4W | / | / |
| ~~2122~~ 95 / 040 MBPAB | REMOVE FOREFLAPS & ASSURE FOREFLAP SUPPLEMENTAL SHEET WILL ACCOMPANY APPROPRIATE ITEM. | 2 | DS | / | / |
| ~~2122~~ 95 / 050 MBPAB | REMOVE 2 EA UPPER 3 EA LOWER HONEYCOMB PANELS FOR ACCESS. | 3 | DS | / | / |
| 2122 / 060 MBPCA | ACCOMPLISH INTERIOR WASH, UPPER & LOWER FOR CORROSION & CRACKS DETERMINATION. MOVE TO ~~MBPDE~~ MBPAB REQ'D_____ NOT REQ'D_____ | 5 | 4W | / | / |
| ~~2122~~ 95 / 070 MBPAB | ACCOMPLISH CONTROL SHAKEDOWN INSP OF FLAP IAW SOW, ANNOTATE DISCREPANCIES. MOVE TO OLDO 4001. | 6 | DS | / | / |

(CONTINUED)

| 15151A * WORK CONTROL DOCUMENT * MSTR 1.DATE 88055 PAGE 2 OF * TOOLS |
|---|

| 15.DISP-16.PDN/ STATION | OP NO. | 17.WORK TO BE ACCOMPLISHED | 18.MECH | 19"I" | 20"C" |
|---|---|---|---|---|---|
| | | NOTE: THE ITEM(S) INPUT ON THIS 959 WILL BE OVERHAULED IN ACCORDANCE WITH INSTRUCTIONS CONTAINED IN THE SOW AND THE TECH ORDERS & DIRECTIVES CONTAINED IN SPEC IV & TAB "A" OF THE SOW. | | | |
| 95 | 080 MBCIA | INSP DRAIN HOLES IN FLAP CARRIAGES FOR CRACKS WITH EDDY CURRENT. "N" STAMP REQD IAW 1C-135-36, SEC V, PART 2. | AI | N | / |
| 95 | 090 MBPAB | ACCOMPLISH ALIGNMENT CHECK IAW (I.E.). REQD_____ NOT REQD_____ | DS | / | |
| 95 | 100 MBPAB | REPAIR/REPLACE UPPER HONEYCOMB PANEL IAW 1C-135(K)A-3-1, SEC X REQD_____ NOT REQD_____ | DS | / | |
| 95 | 110 MBPAB | REPAIR/REPLACE DAMAGED (-29) SMALL TRAILING EDGE IAW 1C-135(K)A-3-1 REQD_____ NOT REQD_____<br><br>NOTE: HONEYCOMB TRAILING EDGE MAY REQUIRE TRIMMING.<br>CAUTION: GAP BETWEEN HONEYCOMB PANELS & TRAILING EDGE MUST BE MAINTAINED AS SHOWN IN T.O. 1C-135(K)A-3-1. FIG 10-6. | DS | / | / |
| ~~123~~ 95 | 120 MBPAB | REAIR/REPLACE (-87 OR 88) LARGE TRAILING EDGE IAW 1C-135(K)A-3-1. REQD_____ NOT REQD_____ | DS | / | / |
| 95 | 130 MBPAB | REPAIR /REPLACE INBOARD SKINS REQD_____ NOT REQD_____ | DS | / | / |
| 95 | 140 MBPAB | REPAIR/REPLACE INBOARD RIB AND LONGERON REQD_____ NOT REQD_____ | DS | / | / |
| 95 | 150 MBPAB | REPAIR/REPLACE OUTBOARD RIB AND LONGERON REQD_____ NOT REQD_____ | DS | / | |
| 95 | 160 MBPAB | REPAIR/REPLACE LOWER HONEYCOMB PANELS IAW 1C-135(K)A-3-1, SEC X REQD_____ NOT REQD_____ | DS | / | / |
| 95 | 170 MBPAB | REPLACE CRACKED TRAILING EDGE RIBS REQD_____ NOT REQD_____ | DS | / | / |
| 95 | 180 MBPAB | REPLACE CRACKED/DAMAGED LEADING EDGE RIBS & WEBS REQD_____ NOT REQD_____<br>NOTE: END ITEM WILL HAVE OO-ALC FORM 586, 587, SOO IDENTIFICATION | DS | / | / |

(CONTINUED)

| 15151A * WORK CONTROL DOCUMENT - MSTR 1.DATE 00055 PAGE 3 OF 6 PAGES<br>15.DISP-16.PDN/ | | | | | |
|---|---|---|---|---|---|
| STATION | OP NO. | 17.WORK TO BE ACCOMPLISHED | 18.MECH | 19"P" | 20"U" |
| | | LABELS APPLIED TO COMPLETED ITEM IAW AFLCR 66-51, CHAPTER 1. NOTE: ACCCEPTANCE DATE ON THE LABEL WITH "M" STAMP FOR THE PERSON PERFORMING THE OVERHAUL IS REQD. CAUTION: SURFACE TO WHICH LABELS ARE APPLIED MUST BE FREE OF CONTAMINATION. | | | |
| 95 | 190 MBPAB | REPLACE CRACKED DAMAGED LEADING EDGE ANGELS CLIPS & CHANNELS. REQD_____ NOT REQD_____ | DS | / | / |
| 95 | 200 MBPAB | REPLACE CRACKED OR DAMAGED LEADING EDGE NOSE SKIN (MATERIAL MAGNESIUM WITH HEATING). REQD_____ NOT REQD_____ | DS | / | / |
| 95 | 210 MBPAB | REMOVE NOSE SKINS IF CRACKS ARE FOUND IN END RIBS. REQD_____ NOT REQD_____ | DS | / | / |
| 95 | 220 MBPAB | INSTALL LOWER INBOARD SKIN REQD_____ NOT REQD_____ | DS | / | / |
| 95 | 230 MBPAB | ACCOMPLISH CLOSEOUT & INSTALL UPPER INBOARD SKIN WHICH INCLUDES INTERNAL CORROSION TREATMENT & REPLACEMENT OF IMPAIRED FSTENERS. | DS | / | / |
| 95 | 240 MBPAB | ACCOMPLISH CLOSEOUT & INSTALL UPPER OUTBOARD HONEYCOMB PANEL WHICH INCLUDES INTERNAL CORROSION TREATMENT & REPLACEMENT OF IMPAIRED FASTENERS. | DS | / | / |
| 95 | 250 MBPAB | REPLACE CRACKED OR WORN FLAP CARRIAGES. INSURE FLAP IS IN FIXTURE PRIOR TO FINAL ATTACHMENT. REQD_____ NOT REQD_____ | DS | / | / |
| 95 | 260 MBPAB | REPLACE CRACKED OR DAMAGED FAIRINGS. REQD_____ NOT REQD_____ | DS | / | / |
| 95 | 270 MBPAB | REMOVE SEAL DEPRESSOR & OPEN FASTENER HOLES. REQD_____ NOT REQD_____ | DS | / | / |
| 95 | 280 MBPAB | ACCOMPLISH CLOSEOUT & INSTALL LOWER IBOARD SKIN PANEL, INCLUDES INTERNAL CORROSION TREATMENT & REPLACEMENT OF IMPAIRED FASTENERS. | DS | / | / |
| 95 | 290 MBPAB | ACCOMPLISH CLOSEOUT & INSTALL LOWER CENTER HONEYCOMB PANEL, INCLUDES CORROSION TREATMENT & REPLACEMENT OF IMPAIRED FASTENERS. | DS | / | / |

| 15151A * WORK CONTROL DOCUMENT * MSTR 1.DATE 6U055 PAGE 4 OF 6 PAGES | | | | | |
|---|---|---|---|---|---|
| 15.DISP STATION | 16.PDN/ OP NO. | 17.WORK TO BE ACCOMPLISHED | 18.MECH | 19"P" | 20"Q" |
| 95 | 300 MBPAB | ACCOMPLISH CLOSEOUT & INSTALL OUTBOARD HONEYCOMB PANEL, INCLUDES INTERNAL CORROSION TREATMENT & REPLACEMENT OF IMPAIREDD FASTENERS. | DS | / | / |
| 95 | 310 MBPAB | INSTALL WING FLAP IN REPAIR JIG P/N 590CA1020. | DS | / | / |
| 95 | 320 MBPAB | ACCOMPLISH INSP & ALIGNMENT CHECK PRIOR TO REMOVAL FROM REPAIR JIG | DS | E | / |
| 95 | 330 MBPAB | REMOVE FLAP FROM REPAIR JIG. | DS | / | / |
| 95 | 340 MBPAB | REPLACE ALL LOOSE, SHEARED OR MISSING FASTENERS ETERNALLY. REQD_____ NOT REQD_____ | DS | / | / |
| 95 | 350 MBPAB | IF NO CRACKS ARE FOUND IN CARRIAGE REWORK DRAIN HOLES IAW FIGS 1, 2 & 3 OF SOW. REQD_____ NOT REQD_____ | DS | / | / |
| 95 | 360 MBPAB | REPAIR GROOVE IN CARRIAGE CAUSED BY LATCHES & ROLLERS IAW 1C-135(K)A 3-3. FIG 2-23. REQD_____ NOT REQD_____ | DS | E | / |
| 95 | 370 MBPAB | FILL ALL SKIN, TRAILING EDGE & SKIN PANEL ACCESS COVER GAPS WITH ENVIRONMENTAL SEALANT. | DS | / | / |
| 95 | 380 MBPAB | CLEAN/TREAT ETERNAL CORROSION IAW 1C-135(K)A-3-4, PAGE 4-13 TO 4-22. REQD_____ NOT REQD_____ MOVE TO MBPCB, BLDG 2280 NOTE: OMIT IF DM LINE GENERATED FLAP. NOTE: NON-STOCKLISTED PARTS & PARTS STOCKLISTED AS FIELD OR DEPOT MAINT CAPABLE. NOTE: OVERHAUL OF FLAP ASSY SHALL BE ACCOMPLISHED IAW [illegible] & JIG 590DA1020 TO ENSURE CORRECT DIMENSIONS & ALIGNMENT. REMOVAL OF MORE THAN TWO PANELS AT OE TIME WILL REQUIRE THE FLAP TO BE PLACED IN FIXTURE 590CJ1020. NOTE: USE SKINSS & PANELS REMOVED AS TEMPLATES TO DETERMINE SIZE, LOCATION & SPACING OF RIVET HOLES. NOTE: REPLACEMENT HONEYCOMB PANELS THAT REQUIRE EDGE TRIMMING WILL HAVE THOSE EDGES RESEALED PRIOR TO INSTALLATION IAW [illegible] 31733. LOWER PANELS TO REQUIRE DRAIN HOLES WILL HAVE [illegible] HOLES SEALED BE[illegible] CAREFUL NOT TO | DS | / | / |

(CONTINUED)

| 15151A * WORK CONTROL DOCUMENT * MSTR 1.DATE 80055 | PAGE 5 OF 6 PAGES |
|---|---|
| 15.DISP-16.PDN/ STATION | OP NO. | 17.WORK TO BE ACCOMPLISHED | 18.MECH | 19"I" | 20"O" |
| | | LET EXCESS SEALER CREATE A DAMMING EFFECT. ALL FASTENERS WILL BE INSTALLED WET USING MIL S 81734, (MIL S-8802 OR EPOXY PAINT MIL P-2377 MAY BE USED AS AN OPTION) | | | |
| 2280 Paint | 390 MBPAB | FINAL WASH & CORROSION TREATMENT NOTE: OMIT IF PDM LINE GENERATED FLAP. | DS | / | / |
| 2280 | 400 MBPAB | PAINT FLAP IAW 1C-135(K)A 3 1, 1C-135(K)A-3-4 & 1-1-9 & 1-18 USING MIL-P-8/112 POLYSULFIDE PRIMER & HIGH GLOSS GREY ALL C-83206, COLOR 1647 PAINT, MARKINGS TO BE INSTALLED IAW DWG 5-86892. NOTE: OMIT IF PMD LINE GENERATED FLAP. MOVE TO MBPAB, BLDG 95 | DS | / | / |
| 95 | 410 MBPAB | REPLACE ALL FLAP ATTACH, BEARING SUPPORTS & SERVICE (CLEAN/GREASE) & REPLACE BEARINGS. REQD_____ NOT REQD_____ | DS | / | / |
| 95 | 420 MBPAB | REPLACE DEFECTIVE FOREFLAP ATTACH NUT PLATES 1 CARRIAGES ASSY. REQD_____ NOT REQD_____ CAUTION: WHEN OVERHAULIG FLAP ASSY 1560009675259FL & 1560009675260FL IT IS MANDATORY TO USE THE LATEST PERFERRED FOREFLAPS IN ALL POSITIONS | DS | / | / |
| 95 | 430 MBPAB | INSTALL FOREFLAPS & ASSURE INSTL MEASUREMENTS & POSITION IS IAW DWG 5-86892 & 1C-135(K)A-2-8,FIG.5-61. NOTE: FLAP ASSY 1560006566200FL WILL HAVE FOREFLAPS P/N 65 7360 1 OR -3137 & 65-7360-3 OR -3138 & 65-7360-4, FLAP ASSY 1560009675259FL & -3137 INSTALLED. FLAP ASSY 1560009672560FL WILL HAVE FOREFLAPS P/N 65-7360-3136 & -3138 INSTALLED. | DS | E | / |
| 95 | 440 MBPAB | REPLACE ALL WORN OR DAMAGED SEALS REQD_____ NOT REQD_____ | DS | / | / |
| 95 | 450 MBPAB | WORK COMPLETED, CONDITION TAG DATE_____ IAW AFM 67-1 MOVE TO CRATING NOTE: MOVE TO AIRCRAFT IF PDM LINE GENERATED FLAP. SERIAL#_____ DATE_____ NOTE: PART WILL HAVE DD-ALC FORM 586 587 & 588 IDENTIFICATION LABELS APPLIED TO COMPLETE ITEM IAW AFLCR | DS | E | / |

(CONTINUED)

| 15151A = WORK CONTROL DOCUMENT = MSTR | J.DATE 80055 | PAGE = 3 = PAGE3 |
|---|---|---|
| 15.DISP-16.PDN/ | | |

| STATION | OP NO. | 17.WORK TO BE ACCOMPLISHED | 18.MEN-HRS "P" | 20"O" |
|---|---|---|---|---|
| | | 66-51.<br>ACCEPTANCE DATE ON THE LABEL ALONG WITH "A" STAMP OF THE PERSON PER FORMING THE OVERHAUL.<br>CAUTION: CONTROL TO WHICH LABELS ARE APPLIED MUST BE FREE OF DIRT. | | |
| | | COORDINATION: DATE: | | |
| | | [illegible] MICHAEL TYTANIC 23 FEB 80 | | |
| | | [illegible] PHIL DUNCAN 23 FEB 80 | | |
| | | [illegible] A. MCCOY 23 FEB 80 | | |
| | | [illegible] LEO HAYES 23 FEB 80 | | |

15188A
15189A

# Wing Control Surfaces

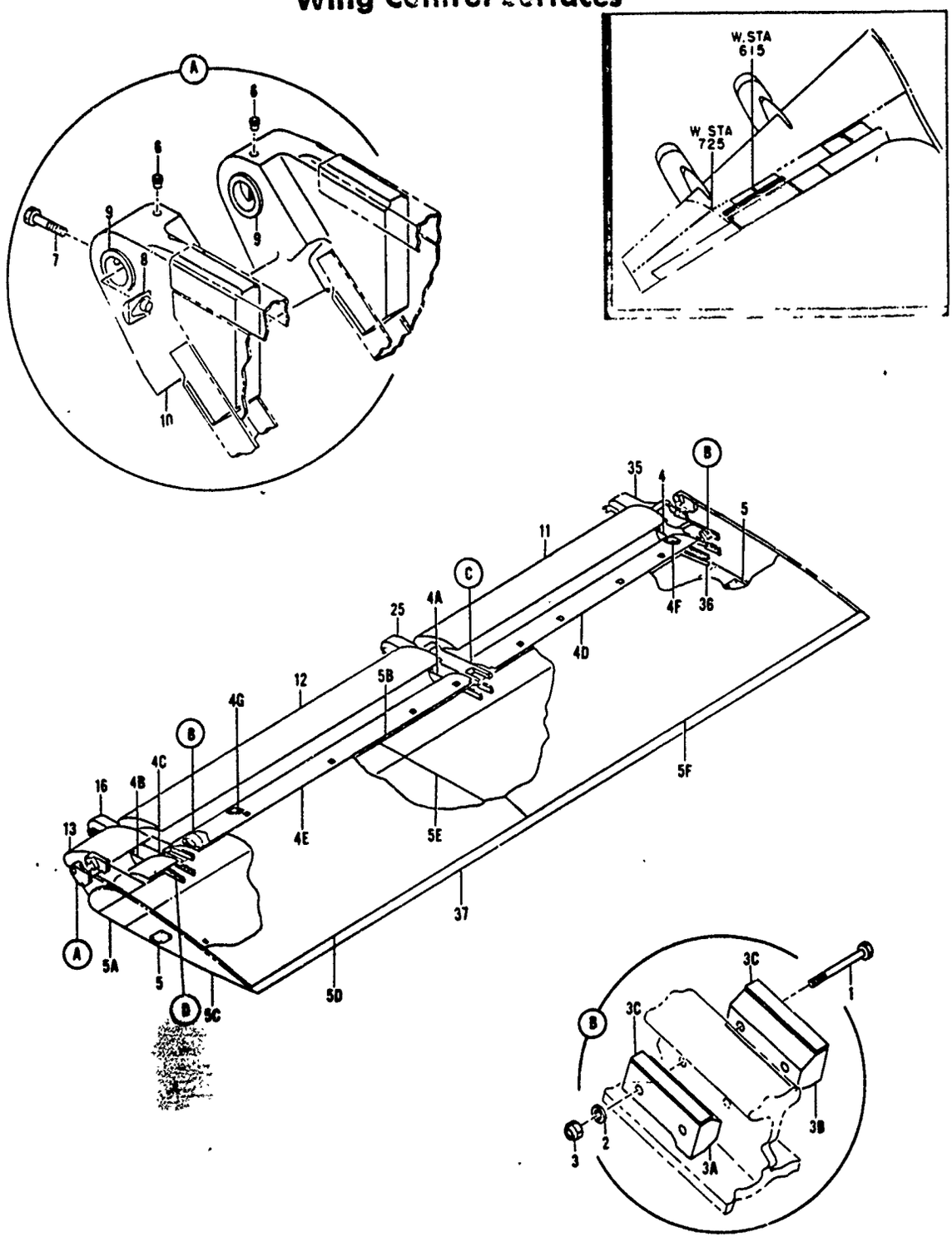


3153-44a

*Figure 44. Outboard Flap Installations (Sheet 1 of 2)*

# Wing Control Surfaces

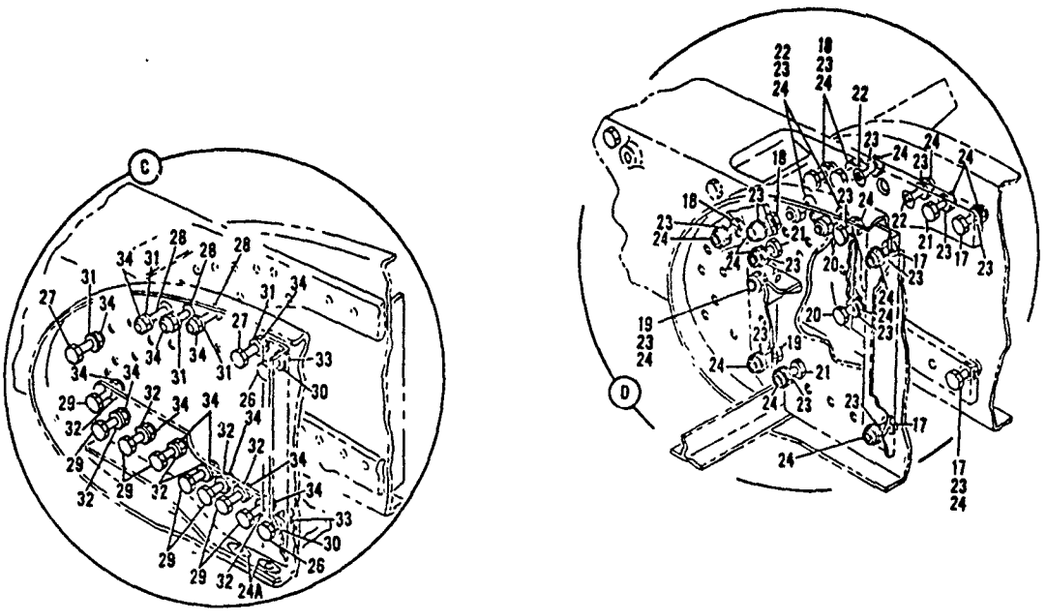


*Figure 44. Outboard Flap Installations (Sheet 2 of 2)*

| FIGURE & INDEX NO. | PART NUMBER | 1 2 3 4 5 6 7 DESCRIPTION | UNITS PER ASSY | USE ON CODE |
|---|---|---|---|---|
| 44 - | | | | |
| | 5-73132-1 | FLAP INSTL, OUTBOARD (LH) (FOR NHA SEE FIG. 2) . . . . | REF | |
| | 5-73132-2 | FLAP INSTL, OUTBOARD (RH) (FOR NHA SEE FIG. 2) . . . . | REF | |
| | 5-95315 | . STOP INSTL, DOWN POSITION, OUTBOARD FLAP . . . . . | 2 | |
| 1 | NAS464P4A25 | . . BOLT (FOR REPLACEMENT ORDER NAS1104-25) . . . . . | 2 | |
| 2 | AN960D416L | . . WASHER . . . . . | 2 | |
| 3 | NAS679A4W | . . NUT (FOR REPLACEMENT ORDER 96-048 (03680) (80539) H10-48AC (15653) T6S428J (71087) RMLH9075-4W (72962) (8ACN10JC4)) | 2 | |
| 3A | 3-93742-3 | . . STOP, FLAP, DOWN POSITION (LH) . . . . . | 1 | |
| 3B | 3-93742-4 | . . STOP, FLAP, DOWN POSITION (RH) . . . . . | 1 | |
| 3C | BACS40A7-37 | . . SHIM, LAM, 0.030 THK (ALTERNATES BACS4087-37, BACS40C7-37) | AR | |
| | 5-87851-155 | . FLAP ASSY, OUTBOARD (ALTERNATE, ANY AIR FORCE SPARE FLAP ASSEMBLY (5-87851-( )) LH FOR LH INSTALLATION INCORPORATING ALL APPLICABLE TECHNICAL ORDERS) (LH ONLY) | 1 | |
| | 5-87851-156 | . FLAP ASSY, OUTBOARD (ALTERNATE, ANY AIR FORCE SPARE FLAP ASSEMBLY (5-87851-( )) RH FOR RH INSTALLATION INCORPORATING ALL APPLICABLE TECHNICAL ORDERS) (RH ONLY) | 1 | |
| | 65-24498-5 | . . DEPRESSORS INSTL, OUTBOARD FLAP (LH ONLY) . . . . . | 1 | A |
| | 65-24498-6 | . . DEPRESSORS INSTL, OUTBOARD FLAP (RH ONLY) . . . . . | 1 | A |
| 4 | 69-18383-1 | . . . DEPRESSOR ASSY, OUTBOARD FLAP, WING STATION 546.30 (LH ONLY) | 1 | A |
| | 69-18383-2 | . . . DEPRESSOR ASSY, OUTBOARD FLAP, WING STATION 546.30 (RH ONLY) | 1 | A |
| 4A | 69-18384-1 | . . . DEPRESSOR ASSY, OUTBOARD FLAP, WING STATION 615.00 | 1 | A |
| 4B | 69-18385-1 | . . . DEPRESSOR ASSY, OUTBOARD FLAP, WING STATION 700.50 | 1 | A |
| 4C | 5-87851-143 | . . SKIN, NOSE, OUTBOARD, OUTBOARD FLAP (LH ONLY) . . . | 1 | |
| | 5-87851-144 | . . SKIN, NOSE, OUTBOARD, OUTBOARD FLAP (RH ONLY) . . . | 1 | |

| FIGURE & INDEX NO. | PART NUMBER | DESCRIPTION 1 2 3 4 5 6 7 | UNITS PER ASSY | USE ON CODE |
|---|---|---|---|---|
| 44 - | | | | |
| 4D | 5-87851-141 | . . SKIN, NOSE, INBOARD, OUTBOARD FLAP (LH ONLY). . . . . | 1 | |
| | 5-87851-142 | . . SKIN, NOSE, INBOARD, OUTBOARD FLAP (RH ONLY). . . . . | 1 | |
| 4E | 5-87851-139 | . . SKIN, NOSE, CENTER, OUTBOARD FLAP (LH ONLY) . . . . . | 1 | |
| | 5-87851-140 | . . SKIN, NOSE, CENTER, OUTBOARD FLAP (RH ONLY) . . . . . | 1 | |
| 4F | 69-9609-3 | . . CAM ASSY, OUTBOARD FLAP, STATION 549.99 (LH ONLY) . . | 1 | |
| | 69-9609-4 | . . CAM ASSY, OUTBOARD FLAP, STATION 549.99 (RH ONLY) . . | 1 | |
| 4G | 69-9337-1 | . . CAM ASSY, OUTBOARD FLAP, STATION 680.07 . . . . . | 1 | |
| 5 | 63-8483 | . . STRIP, BUMPER, ACTUATOR, OUTBOARD FLAP. . . . . | 2 | |
| 5A | 5-88723-15 | . . PANEL ASSY, HONEYCOMB, LOWER FORWARD OUTBOARD HALF, . OUTBOARD FLAP SKIN (FOR I/W INFO SEE 5-88723-23) (ALTERNATE 5-88723-23) (LH ONLY) | 1 | F |
| 5A | 5-88723-23 | . . PANEL ASSY, HONEYCOMB, LOWER FORWARD OUTBOARD HALF, . OUTBOARD FLAP SKIN (I/W 5-88723-15) (USE 5-88723-15 UNTIL EXHAUSTED) (LH ONLY) | 1 | G |
| | 5-88723-16 | . . PANEL ASSY, HONEYCOMB, LOWER FORWARD OUTBOARD HALF, . OUTBOARD FLAP SKIN (FOR I/W INFO SEE 5-88723-24) (ALTERNATE 5-88723-24) (RH ONLY) | 1 | F |
| | 5-88723-24 | . . PANEL ASSY, HONEYCOMB, LOWER FORWARD OUTBOARD HALF, . OUTBOARD FLAP SKIN (I/W 5-88723-16) (USE 5-88723-16 UNTIL EXHAUSTED) (RH ONLY) | 1 | G |
| 5B | 5-88722-15 | . . PANEL ASSY, HONEYCOMB, LOWER FORWARD INBOARD HALF, . OUTBOARD FLAP SKIN (FOR I/W INFO SEE 5-88722-23) (ALTERNATE 5-88722-23) (LH ONLY) | 1 | F |
| 5B | 5-88722-23 | . . PANEL ASSY, HONEYCOMB, LOWER FORWARD INBOARD HALF, . OUTBOARD FLAP SKIN (I/W 5-88722-15) (USE 5-88722-15 UNTIL EXHAUSTED) (LH ONLY) | 1 | G |
| | 5-88722-16 | . . PANEL ASSY, HONEYCOMB, LOWER FORWARD INBOARD HALF, . OUTBOARD FLAP SKIN (FOR I/W INFO SEE 5-88722-24) (ALTERNATE 5-88722-24) (RH ONLY) | 1 | F |
| | 5-88722-24 | . . PANEL ASSY, HONEYCOMB, LOWER FORWARD INBOARD HALF, . OUTBOARD FLAP SKIN (I/W 5-88722-16) (USE 5-88722-16 UNTIL EXHAUSTED) (RH ONLY) | 1 | G |
| 5C | 50-4671-1 | . . PANEL ASSY, SKIN, HONEYCOMB, LOWER OUTBOARD HALF, . . OUTBOARD FLAP (FOR REPLACEMENT ORDER 50-4671-3022) (LH ONLY) | 1 | F |
| 5C | 50-4671-11 | . . PANEL ASSY, SKIN, HONEYCOMB, LOWER OUTBOARD HALF, . . OUTBOARD FLAP (FOR REPLACEMENT ORDER 50-4671-3022) (LH ONLY) | 1 | G |
| | 50-4671-2 | . . PANEL ASSY, SKIN, HONEYCOMB, LOWER OUTBOARD HALF, . . OUTBOARD HALF (FOR REPLACEMENT ORDER 50-4671-3022) (RH ONLY) | 1 | F |
| | 50-4671-12 | . . PANEL ASSY, SKIN, HONEYCOMB, LOWER OUTBOARD HALF, . . OUTBOARD FLAP (FOR REPLACEMENT ORDER 50-4671-3022) (RH ONLY) | 1 | G |
| 5D | 50-4671-3 | . . PANEL ASSY, SKIN, HONEYCOMB, UPPER OUTBOARD HALF, . . OUTBOARD FLAP (FOR REPLACEMENT ORDER 50-4671-3022) (LH ONLY) | 1 | F |
| 5D | 50-4671-13 | . . PANEL ASSY, SKIN, HONEYCOMB, UPPER OUTBOARD HALF, . . OUTBOARD FLAP (FOR REPLACEMENT ORDER 50-4671-3022) (LH ONLY) | 1 | G |
| | 50-4671-4 | . . PANEL ASSY, SKIN, HONEYCOMB, UPPER OUTBOARD HALF, . . OUTBOARD FLAP (FOR REPLACEMENT ORDER 50-4671-3022) (RH ONLY) | 1 | F |
| | 50-4671-14 | . . PANEL ASSY, SKIN, HONEYCOMB, UPPER OUTBOARD HALF, . . OUTBOARD FLAP (FOR REPLACEMENT ORDER 50-4671-3022) (RH ONLY) | 1 | G |
| 5E | 50-4670-1 | . . PANEL ASSY, SKIN, HONEYCOMB, LOWER INBOARD HALF, . . OUTBOARD FLAP (FOR REPLACEMENT ORDER 50-4670-3022) (LH ONLY) | 1 | F |
| 5E | 50-4670-11 | . . PANEL ASSY, SKIN, HONEYCOMB, LOWER INBOARD HALF, . . OUTBOARD FLAP (FOR REPLACEMENT ORDER 50-4670-3022) (LH ONLY) | 1 | G |
| | 50-4670-2 | . . PANEL ASSY, SKIN, HONEYCOMB, LOWER INBOARD HALF, . . OUTBOARD FLAP (FOR REPLACEMENT ORDER 50-4670-3022) (RH ONLY) | 1 | F |
| | 50-4670-12 | . . PANEL ASSY, SKIN, HONEYCOMB, LOWER INBOARD HALF, . . OUTBOARD FLAP (FOR REPLACEMENT ORDER 50-4670-3022) (RH ONLY) | 1 | G |
| 5F | 50-4670-3 | . . PANEL ASSY, SKIN, HONEYCOMB, UPPER INBOARD HALF, . . OUTBOARD FLAP (FOR REPLACEMENT ORDER 50-4670-3022) (LH ONLY) | 1 | F |

| FIGURE & INDEX NO. | PART NUMBER | DESCRIPTION 1 2 3 4 5 6 7 | UNITS PER ASSY | USE ON CODE |
|---|---|---|---|---|
| 44 - | | | | |
| 5F | 50-4670-13 | . . PANEL ASSY, SKIN, HONEYCOMB, UPPER INBOARD HALF, . . OUTBOARD FLAP (FOR REPLACEMENT ORDER 50-4670-3022) (LH ONLY) | 1 | G |
| | 50-4670-4 | . . PANEL ASSY, SKIN, HONEYCOMB, UPPER INBOARD HALF, . . OUTBOARD FLAP (FOR REPLACEMENT ORDER 50-4670-3022) (RH ONLY) | 1 | F |
| | 50-4670-14 | . . PANEL ASSY, SKIN, HONEYCOMB, UPPER INBOARD HALF, . . OUTBOARD FLAP (FOR REPLACEMENT ORDER 50-4670-3022) (RH ONLY) | 1 | G |
| | 9-61951-8 | . . . FITTING ASSY, SUPPORT, FLAP SCREW . . . . . | 1 | |
| 6 | NAS516-1 | . . . . FITTING . . . . . | 2 | |
| 7 | AN4-10A | . . . . BOLT (FOR REPLACEMENT ORDER BACB30NE4-9). . . . . | 2 | |
| 8 | 63-1519 | . . . . NUTPLATE ASSY, CONVEX, WING FLAP. . . . . | 2 | |
| 9 | 3-98762 | . . . . BEARING, SUPPORT, FLAP SCREW. . . . . | 2 | |
| 10 | 9-61951-7 | . . . . FITTING, SUPPORT, FLAP SCREW. . . . . | 1 | |
| 11 | 65-7360-5 | . . FLAP ASSY, FORE (LH ONLY) (FOR REPLACEMENT ORDER. . . 65-7360-3127) (FOR BREAKDOWN SEE FIG. 53) | 1 | B |
| | 65-7360-6 | . . FLAP ASSY, FORE (RH ONLY) (FOR REPLACEMENT ORDER. . . 65-7360-3128) (FOR BREAKDOWN SEE FIG. 53) | 1 | B |
| 12 | 65-7360-3129 | . . FLAP ASSY, FORE (LH ONLY) (FOR BREAKDOWN SEE. . . . . FIG. 54) | 1 | |
| | 65-7360-3130 | . . FLAP ASSY, FORE (RH ONLY) (FOR BREAKDOWN SEE. . . . . FIG. 54) | 1 | |
| 13 | 65-7360-9 | . . FLAP ASSY, FORE (LH ONLY) (FOR BREAKDOWN SEE. . . . . FIG. 55) | 1 | |
| | 65-7360-10 | . . FLAP ASSY, FORE (RH ONLY) (FOR BREAKDOWN SEE. . . . . FIG. 55) | 1 | |
| | | (ATTACHING PARTS) | | |
| | AN4-10A | . . BOLT (FOR REPLACEMENT ORDER BACB30NE4-9). . . . . | 20 | |
| | (A)AN4-11A | . . BOLT. . . . . | 20 | |
| | NAS1104-3W | . . BOLT (FOR REPLACEMENT ORDER NAS1104-3). . . . . | 2 | |
| | AN960D416 | . . WASHER. . . . . | 22 | |
| | AN960PD416L | . . WASHER. . . . . | AR | |
| | NAS679A4W | . . NUT (FOR REPLACEMENT ORDER 96-048 (03680) (80539) . . H10-4BAC (15653) T6S428J (71087) RMLH9075-4W (72962) (BACN10JC4)) ---------*--------- | 22 | |
| 14 | (DELETED) | | | |
| 15 | (DELETED) | | | |
| | 5-87852-63 | . . RIB INSTL, OUTBOARD TRACK, OUTBOARD FLAP (LH ONLY). . | 1 | |
| | 5-87852-64 | . . RIB INSTL, OUTBOARD TRACK, OUTBOARD FLAP (RH ONLY). . | 1 | |
| 16 | 5-87847-7 | . . . CARRIAGE ASSY, END, OUTBOARD FLAP (FOR BREAKDOWN. . SEE FIG. 45) | 1 | |
| | | (ATTACHING PARTS) | | |
| 17 | NAS1104-8W | . . . BOLT (FOR REPLACEMENT ORDER NAS1104-8). . . . . | 4 | |
| 18 | NAS1104-6W | . . . BOLT (FOR REPLACEMENT ORDER NAS1104-6). . . . . | 4 | |
| 19 | NAS1104-9W | . . . BOLT (FOR REPLACEMENT ORDER NAS1104-9). . . . . | 3 | |
| 20 | NAS1104-7W | . . . BOLT (FOR REPLACEMENT ORDER NAS1104-7). . . . . | 3 | |
| 21 | NAS1104-6W | . . . BOLT (FOR REPLACEMENT ORDER NAS1104-6). . . . . | 30 | |
| 22 | NAS517-4-6 | . . . SCREW (FOR REPLACEMENT ORDER BACB30LU4-6) . . . . . | 6 | |
| 23 | AN960D416 | . . . WASHER. . . . . | 50 | |
| 24 | NAS679A4W | . . . NUT (FOR REPLACEMENT ORDER 96-048 (03680) (80539) . H10-4BAC (15653) T6S428J (71087) RMLH9075-4W (72962) (BACN10JC4)) ---------*--------- | 50 | |
| | 5-87858-7[illegible] | . . RIB INSTL, CENTER TRACK, OUTBOARD FLAP. . . . . | 1 | |
| 24A | NAS46[illegible]416L | . . . SHIM. . . . . | 4 | |
| 25 | 5-87846-[illegible] | . . . CARRIAGE ASSY, CENTER, OUTBOARD FLAP (FOR . . . . . BREAKDOWN SEE FIG. 52) | 1 | |
| | | (ATTACHING PARTS) | | |
| 26 | NAS1105-8W | . . . BOLT (FOR REPLACEMENT ORDER NAS1105-8). . . . . | 4 | |
| 27 | NAS1104-6W | . . . BOLT (FOR REPLACEMENT ORDER NAS1104-6). . . . . | 20 | |
| 28 | NAS517-4-6 | . . . SCREW (FOR REPLACEMENT ORDER BACB30LU4-6) . . . . . | 6 | |
| 29 | NAS1104-7W | . . . BOLT (FOR REPLACEMENT ORDER NAS1104-7). . . . . | 16 | |
| 30 | AN960D516 | . . . WASHER. . . . . | 4 | |
| 31 | AN960D416 | . . . WASHER. . . . . | 26 | |
| 32 | AN960D416L | . . . WASHER. . . . . | 16 | |
| 33 | MS21042L5 | . . . NUT (REPLACES NAS679A5) . . . . . | 4 | |
| 34 | NAS679A4W | . . . NUT (FOR REPLACEMENT ORDER 96-048 (03680) (80539) . H10-4BAC (15653) T6S428J (71087) RMLH9075-4W (72962) (BACN10JC4)) ---------*--------- | 42 | |

| FIGURE & INDEX NO | PART NUMBER | DESCRIPTION (1 2 3 4 5 6 7) | UNITS PER ASSY | USE ON CODE |
|---|---|---|---|---|
| 44 - | | | | |
| 35 | 5-87841-239 | • • • RIB INSTL, INBOARD ACTUATOR AND TRACK, OUTBOARD . . FLAP (LH ONLY) (FOR BREAKDOWN SEE FIG. 46) | 1 | |
| | 5-87841-240 | • • • RIB INSTL, INBOARD ACTUATOR AND TRACK, OUTBOARD . . FLAP (RH ONLY) (FOR BREAKDOWN SEE FIG. 46) | 1 | |
| 36 | 5-87851-91 | • • • SEAL, MOHAIR, OUTBOARD FLAP (MAKE FROM 568C . . . . BAC1523-20 X 14.0) | 1 | D |
| 36 | 5-87851-161 | • • • SEAL, MOHAIR, OUTBOARD FLAP (MAKE FROM 5680 . . . . BAC1523-20N X 14.0) | 1 | E |
| | 90-4577-49 | • • TRAILING EDGE INSTL, OUTBOARD FLAP (LH ONLY) . . . | 1 | |
| | 90-4577-50 | • • TRAILING EDGE INSTL, OUTBOARD FLAP (RH ONLY) . . . | 1 | |
| 37 | 90-4577-51 | • • TRAILING EDGE ASSY, OUTBOARD FLAP (LH ONLY) . . . | 1 | |
| | 90-4577-52 | • • TRAILING EDGE ASSY, OUTBOARD FLAP (RH ONLY) . . . (ATTACHING PARTS) | 1 | |
| | NAS517-3-4 | • • SCREW (FOR REPLACEMENT ORDER BACB30LU3-4) . . . . | 117 | |

---------*---------

A 3029 THRU 3099
B 2201 THRU 2299, 3001 THRU 3099
C DELETED
D 3001 THRU 3001
E 3002 THRU 3099
F 3001 THRU 3099
G 2201 THRU 2299

NOTE:
THIS FOREFLAP COMES OFF 15151A AT OPS 40 OR 30 IN NEW AREA, AND IS ASSY IN OPS 430

## FLOW PROCESS CHART

SUBJECT WING FLAP INBOARD FORE FLAP DATE 4/5/89

PCN: 15191A 15192A WCD: 15152A WCDATE: 88055

CHART BEGINS PAGE OF

CHART ENDS PREPARED BY: R. BOLANOS

| WCD OP # | SYMBOLS | DESCRIPTION |
|---|---|---|
| | | DELAY coming off 15151A from OPS 40 |
| | | MOVE TO WASH & STRIP 2122 MABPCA |
| | | DELAY |
| 05 | | STRIP & WASH FOREFLAP |
| | | DELAY |
| | | MOVE TO X-RAY |
| | | DELAY |
| 10 | | X-RAY SKINS |
| | | DELAY |
| | | MOVE TO SHEETMETAL |
| | | DELAY |
| 20 | | SHAKEDOWN INSPECTION |
| 25 | | CHECK MOUNTING HOLES |
| 30 | | R/R EXTERIOR SKINS & CLEAN |
| 40 | | CHECK FOR CORROSION ANY REPAIR |
| 50 | | R/R RIB |
| 60 | | R/R END ATTACHED PLATE |
| 70 | | R/R INTERNAL RIBS |
| 80 | | R/R RUB STRIPS |
| [illegible] | | R/R FASTENERS |
| [illegible] | | R/R TRAILING EDGE EXTENSION |
| | | DELAY |
| | | MOVE TO WASH & PAINT. IP-PDM TO AIRCRAFT, NO PAINT NEEDED |
| | | |
| 110 | | PREPARED & PAINT 2280 MABPCB |
| | | DELAY |
| 120 | | MOVE TO SHEETMETAL IP-PDM TO AIRCRAFT. |
| | | DELAY |
| 130 | | CONDITION TAG |

| WCD OP # | SYMBOLS | DESCRIPTION |
|---|---|---|
| | | DELAY |
| | | MOVE TO CRATING |

| 15152A | WORK CONTROL DOCUMENT * MSTR 1.DATE 08055 PAGE 1 OF 2 PGS |
|---|---|

| 2.ORIG/PROD NR | 3.QUANTITY | 4.PROD SECTION/ROC | 5.DATE SCHLD | 6.DATE COMP |
|---|---|---|---|---|
| | | MABPAB | 82073 | |

| 7.PART NUMBER | 9.ITEM SERIAL NR | 10/12.TECH DATA/OPTIONAL |
|---|---|---|
| | | FORE FLAP SUPPLEMENT |
| | | SOW DC 1560FL/82-67 |
| 8.MODEL/DESIGN/SERIES | 11.STOCK NR | REVISION #1, DTD 9 MAR 82 |
| C 135 | | |

| 13.MFRS | 14.NOUN/END ITEM NOUN |
|---|---|
| | WING FLAP, INBOARD(FORE FLAP) |
| | MICHAEL (YTANIC/MABCBS/65261 |

| P/N | NSN | C/N |
|---|---|---|
| 5-86392-107 | 1560006067421FL | 15151A |
| 5-86392-121 | 1560006067421FL | 15151A |
| 5-86392-123 | 1560006067421FL | 15151A |
| 5-86392-120 | 1560006067422FL | 15152A |
| 5-86392-112 | 1560006210781FL | 15160A |
| 5-86392-127 | 1560006566065FL | 15104A |
| 5-86392-128 | 1560006566066FL | 15105A |
| 5-86392-129 | 1560006566200FL | 15191A |
| 5-86392-130 | 1560006566201FL | 15192A |
| 5-86392-131 | 1560006566202FL | 15193A |
| 5-86392-132 | 1560006566203FL | 15194A |
| 5-86392-133 | 1560006567500FL | 15207A |

| STATION | OP NO. | 17.WORK TO BE ACCOMPLISHED | 18.MAN | 19"U" | 20"D" |
|---|---|---|---|---|---|
| 21&W | 005 MBPCA | STRIP AND WASH FORE FLAP IAW 1C-135(K)A-3-4 | 4W | / | / |
| 3003 | 010 MBCIA | X-RAY FORE FLAP, 11 SKIN IS NOT REMOVED. "N" STAMP RECORD IAW 1C-135-36,SECT. 11 | A1 | / | / |
| 95 | 020 MBPAB | ACCOMPLISH E&I SHAKEDOWN | DS | / | / |
| 95 | 025 MBPAB | CHECK MOUNTING HOLES IN ATTACHMENT BRACKET TO SEE IF WITHIN TOLERANCES. REQ'D_____ NOT REQ'D_____ | DS | / | / |
| 95 | 030 MBPAB | REPAIR/REPLACE EXTERIOR SKINS IAW 1C-135(K)A-3-1, FIG 10-5 (INCLUDES CLEAN & CLOSEOUT). | DS | / | / |
| 95 | 040 MBPAB | CHECK FOREFLAP FOR CORROSION AND WORK IF ANY IS FOUND. REQ'D_____ NOT REQ'D_____ | DS | / | / |
| 95 | 050 80 MBPAB | REPLACE END RIB REQD_____ NOT REQD_____ | DS | / | / |
| 95 | 060 90 MBPAB | REPLACE END ATTACH PLATE REQD_____ NOT REQD_____ | DS | / | / |
| 95 | 070 100 MBPAB | REPLACE INTERNAL RIBS OR FILLD REPAIRD RIBS. REQD_____ NOT REQD_____ | DS | / | / |

15152A * WORK CONTROL DOCUMENT * MSTR 1.DATE 80055 PAGE 2 OF 2 PAGES

| 15.DISP STATION | 16.PDN/ UF NO. | 17.WORK TO BE ACCOMPLISHED | 18.MECH | 19"P" | 20"Q" |
|---|---|---|---|---|---|
| 95 | 080 110<br>MBPAB | REPLACE RUB STRIPS NO._____<br>REQD_____ NOT REQD_____ | DS | / | / |
| 95 | 090 120<br>MBPAB | REPLACE MISSING, DEFECTIVE OR LOOSE FASTENERS.<br>REQD_____ NOT REQD_____ | DS | / | / |
| 95 | 100 130<br>MBPAB | REPLACE CRACKED TRAILING EDGE EXTENSION.<br>REQD_____ NOT REQD_____<br><br>MOVE TO MBPCB BLDG 2280<br>NOTE: UNIT MOVE IF PDM LINE GENERATED FLAP. | DS | / | / |
| 2280 | 110 140<br>MBPCB | FINAL WASH & CORROSION TREAT<br>NOTE: IF IN PDM LINE GENERATED FLAP. PREPARE & PAINT IAW SL-135(K)A 3-4 & 1 1 4 & 1 1 0 USING MIL P-8/112 POLYSULFIDE PRIMER AND HIGH GLOSS GRAY MIL-C 83286 COLOR 16473 PAINT. | MB | / | / |
| 2280 | 120<br>MBPCB | MOVE TO MBPAB, BLDG 95.<br>NOTE: MOVE TO AIRCRAFT SERIAL #_____<br>DATE _____<br>IF PDM LINE GENERATE FLAP. | JB | / | / |
| 95 | 130<br>MBPAB | WORK COMPLETED, CONDITION TAG IAW AFM 67-1.<br>MOVE TO CRATING. DATE_____ | DS | / | / |

COORDINATION: DATE:

| | | |
|---|---|---|
| MABEFS | MICHAEL TYTANIC | 24 FEB 80 |
| MABSF | PHIL DUNCAN | 24 FEB 80 |
| MABBF | TED HAYES | 24 FEB 80 |
| MBPAB | M.A. MCCOY | 24 FEB 80 |

operation numbers are in sequence of actual operations

Forceflops worked on WCD 15154A

MABPAB 070 SHAKEDOWN

MARCIA 080 Inspection

# FLOW PROCESS CHART

SUBJECT Wing Flap Outboard DATE 9/5

PCN: 15188A- WCD: 15153 A WCDDATE: 88055
15189A-

CHART BEGINS



CHART ENDS

PREPARED BY: LARRY M

| WCD OP # | SYMBOLS | DESCRIPTION |
|---|---|---|
| 010 | ● ◇ D □ ▽ | RECEIVE & UNCRATE 2122 MBPCD |
| | ○ ◇ ◗ □ ▽ | DELAY |
| | ○ ◆ D □ ▽ | MOVE |
| | ○ ◇ ◗ □ ▽ | DELAY |
| 020 | ● ◇ D □ ▽ | REMOVE FOREFLAPS 95 MABPAB |
| | ○ ◇ ◗ □ ▽ | |
| | ○ ◆ D □ ▽ | |
| | ○ ◇ ◗ □ ▽ | |
| 030 | ● ◇ D □ ▽ | REMOVE HONEYCOMB PANELS |
| | ○ ◇ ◗ □ ▽ | DELAY |
| | ○ ◆ D □ ▽ | MOVE TO 2122 |
| | ○ ◇ ◗ □ ▽ | DELAY |
| 040 | ● ◇ D □ ▽ | PLUG ALL DRAIN HOLES 2122 MABPCA |
| | ○ ◇ ◗ □ ▽ | |
| | ○ ◆ D □ ▽ | |
| | ○ ◇ ◗ □ ▽ | |
| 050 | ● ◇ D □ ▽ | CLEAN & STRIP |
| | ○ ◇ ◗ □ ▽ | |
| 060 | ● ◇ D □ ▽ | ACCOMPLISH NDI 2122 MABPCA |
| | ◎ ◇ ◗ □ ▽ | DELAY MOVE AWAY |
| 070 | ● ◇ D □ ▽ | BOND REPAIR (ALIGNMENT CHECK) 95 MABPAB |
| 080 | ● ◇ D □ ▽ | REP/REP UPPER HONEYCOMB PANEL |
| 090 | ● ◇ D □ ▽ | REP/REP TRAILING EDGE |
| 100 | ● ◇ D □ ▽ | REP/REP INBD RIB & LONGERON |
| 110 | ● ◇ D □ ▽ | REP/REP OUTBD RIB & LONGERON |
| 120 | ● ◇ D □ ▽ | REP/REP LOWER HONEYCOMB PANELS |
| 130 | ● ◇ D □ ▽ | REPLACE CRACKED TRAILING EDGE RIBS |
| 140 | ● ◇ D □ ▽ | REPLACE CRACKED OR DAMAGED LEADING EDGE CLIPS, ETC. |
| 150 | ● ◇ D □ ▽ | REPLACE LEADING EDGE NOSE RIBS & WEBS. |
| 160 | ● ◇ D □ ▽ | REP/REP LEADING NOSE SKINS |
| 170 | ● ◇ D □ ▽ | REPAIR NOSE SKINS IF CRACKED |
| 180 | ● ◇ D □ ▽ | REPLACE CRACKED NOSE END RIBS |
| 190 | ● ◇ D □ ▽ | CLOSEOUT & INSTALL UPPER OUTBD HONEYCOMB PANEL. |
| 200 | ● ◇ D □ ▽ | CLOSEOUT & INSTALL UPPER INBD HONEYCOMB PANEL. |
| 210 | ● ◇ D □ ▽ | REPLACE WORN CARRIAGES. |
| 220 | ● ◇ D □ ▽ | REP/REP DAMAGED FAIRINGS |
| 230 | ● ◇ D □ ▽ | REMOVE SEAL DEPRESSOR |
| 240 | ● ◇ D □ ▽ | CLOSEOUT & INSTALL LOWER INBD HONEYCOMB PANEL |
| 250 | ● ◇ D □ ▽ | CLOSEOUT & INSTALL LOWER OUTBD HONEYCOMB PANEL |
| 260 | ● ◇ D □ ▽ | INSTALL IN JIG |
| 270 | ● ◇ D □ ▽ | INSPECT ALIGNMENT |
| 280 | ● ◇ D □ ▽ | REMOVE FROM JIG |
| 290 | ● ◇ D □ ▽ | REPLACE BAD FASTENERS |
| 300 | ● ◇ D □ ▽ | REWORK DRAIN HOLES |
| 310 | ● ◇ D □ ▽ | REPAIR GROOVES |
| 320 | ● ◇ D □ ▽ | ACCOMPLISH AERO SEALANT |
| 330 | ● ◇ D □ ▽ | CLEAN & TREAT CORROSION |
| 340 | ● ◇ D □ ▽ | |
| 350 | ○ ◇ ◗ □ ▽ | DELAY |
| | ○ ◆ D □ ▽ | MOVE TO 2280 |
| | ○ ◇ ◗ □ ▽ | DELAY |
| 360 | ● ◇ D □ ▽ | FINAL WASH + PAINT 2280 MBPCB |
| | ○ ◇ ◗ □ ▽ | DELAY |
| | ○ ◆ D □ ▽ | MOVE TO 95 |
| | ○ ◇ ◗ □ ▽ | DELAY |
| 370 | ● ◇ D □ ▽ | ATTACH & SERVICE BEARINGS 95 MBPAB |
| 380 | ● ◇ D □ ▽ | REPLACE DEFECTIVE FOREFLAP ATTACH NUTPLATES. |
| 390 | ● ◇ D □ ▽ | INSTALL FOREFLAPS |
| 400 | ● ◇ D □ ▽ | REPLACE WORN OR DAMAGED SEALS. |

# FLOW PROCESS CHART

SUBJECT _____ DATE 4/5

PCN: 15188A 15189A WCD: 15153A WCDDATE:

CHART BEGINS _____ 2 of 2

CHART ENDS _____ PREPARED BY: LARRY M.

| SYMBOLS | DESCRIPTION | SYMBOLS | DESCRIPTION |
|---|---|---|---|
| HID ● ⇨ D □ ▽ | WORK COMPLETE/CONDITION TAG | ○ ⇨ D □ ▽ | |
| ○ ⇨ D □ ▽ | | ○ ⇨ D □ ▽ | |
| ○ ⇨ D □ ▽ | | ○ ⇨ D □ ▽ | |
| ○ ⇨ D □ ▽ | | ○ ⇨ D □ ▽ | |
| ○ ⇨ D □ ▽ | | ○ ⇨ D □ ▽ | |
| ○ ⇨ D □ ▽ | | ○ ⇨ D □ ▽ | |
| ○ ⇨ D □ ▽ | | ○ ⇨ D □ ▽ | |
| ○ ⇨ D □ ▽ | | ○ ⇨ D □ ▽ | |
| ○ ⇨ D □ ▽ | | ○ ⇨ D □ ▽ | |
| ○ ⇨ D □ ▽ | | ○ ⇨ D □ ▽ | |
| ○ ⇨ D □ ▽ | | ○ ⇨ D □ ▽ | |
| ○ ⇨ D □ ▽ | | ○ ⇨ D □ ▽ | |
| ○ ⇨ D □ ▽ | | ○ ⇨ D □ ▽ | |
| ○ ⇨ D □ ▽ | | ○ ⇨ D □ ▽ | |
| ○ ⇨ D □ ▽ | | ○ ⇨ D □ ▽ | |
| ○ ⇨ D □ ▽ | | ○ ⇨ D □ ▽ | |
| ○ ⇨ D □ ▽ | | ○ ⇨ D □ ▽ | |
| ○ ⇨ D □ ▽ | | ○ ⇨ D □ ▽ | |
| ○ ⇨ D □ ▽ | | ○ ⇨ D □ ▽ | |
| ○ ⇨ D □ ▽ | | ○ ⇨ D □ ▽ | |
| ○ ⇨ D □ ▽ | | ○ ⇨ D □ ▽ | |
| ○ ⇨ D □ ▽ | | ○ ⇨ D □ ▽ | |
| ○ ⇨ D □ ▽ | | ○ ⇨ D □ ▽ | |
| ○ ⇨ D □ ▽ | | ○ ⇨ D □ ▽ | |
| ○ ⇨ D □ ▽ | | ○ ⇨ D □ ▽ | |
| ○ ⇨ D □ ▽ | | ○ ⇨ D □ ▽ | |
| ○ ⇨ D □ ▽ | | ○ ⇨ D □ ▽ | |
| ○ ⇨ D □ ▽ | | ○ ⇨ D □ ▽ | |
| ○ ⇨ D □ ▽ | | ○ ⇨ D □ ▽ | |
| ○ ⇨ D □ ▽ | | ○ ⇨ D □ ▽ | |
| ○ ⇨ D □ ▽ | | ○ ⇨ D □ ▽ | |
| ○ ⇨ D □ ▽ | | ○ ⇨ D □ ▽ | |
| ○ ⇨ D □ ▽ | | ○ ⇨ D □ ▽ | |
| ○ ⇨ D □ ▽ | | ○ ⇨ D □ ▽ | |
| ○ ⇨ D □ ▽ | | ○ ⇨ D □ ▽ | |
| ○ ⇨ D □ ▽ | | ○ ⇨ D □ ▽ | |

| 15J53A * WORK CONTROL DOCUMENT * | 1.DATE 88055 | PAGE 1 OF [illegible] PAGES |
|---|---|---|

| 2.ORIG/PROD NR | 3.QUANTITY | 4.PROD SECTION/RCC | 5.DATE SCHD | [illegible] |
|---|---|---|---|---|
| | | MBPAB | 8Y093 | |

| 7.PART NUMBER | 9.ITEM SERIAL NR | 8/12.TECH DATA/OPTIONAL |
|---|---|---|
| | | 1. STATEMENT OF WORK FILE NO. DC-1560FL/02-66. |
| 10.MODEL/DESIGN/SERIES | 11.STOCK NR | 2. FILE IN ANY ADDT'L WORK REQUIREMENTS. |
| C-135 | | |

| 13.A/C | 14.NOUN/CND | FLA NOUN |
|---|---|---|
| | WING FLAP, OUTBD | |
| | MILITARY | TRANSPORT/MARK 33/A3261 |

| P/N | NSN | C/N |
|---|---|---|
| 5-87851-145 | 1560006064231FL | 15153A |
| 5-87851-146 | 1560006064241FL | 15154A |
| 5-87851-136 | 1560006210781FL | 15171A |
| 5-87851-153 | 1560006470303FL | 15176A |
| 5-87851-154 | 1560006470304FL | 15177A |
| 5-87851-155 | 1560006566180FL | 15188A |
| 5-87851-156 | 1560006566181FL | 15189A |
| 5-87851-159 | 1560006566204FL | 15195A |
| 5-87851-160 | 1560006566205FL | 15196A |
| 5-87851-163 | 1560009609837FL | 15255A |

| 16.DISP STATION | 16.PDN/OP NO. | 17.WORK TO BE ACCOMPLISHED | 18.MECH | 19"P" | 20"Q" |
|---|---|---|---|---|---|
| 2122 | 010 MBPCD | RECEIVE AND UNCRATE. (1) REQ'D_____ NOT REQ'D_____ | QC | / | / |
| 2122 | ~~020~~ MBPCA | CLEAN AND STRIP PAINT FROM FLAP (INCLUDE FLAP TRACK WELL) IAW 1C-135 (K)A-3-4, SEC. XI, NOTE: ON PDM LINE GENERATED FLAP CLEAN FLAP TRACK WELL AND CARRIAGE ASSYS. ASSURE ENTIRE ASSY. IS FREE OF ALL DIRT, PAINT AND GREASE. (4) | 4W | / | / |
| 2122 | ~~030~~ MBPCA | PLUG ALL DRAIN HOLES TO PREVENT PAINT STRIPPER FROM ENTERING INTO INTERIOR OF FLAP ASSY. NOTE: OMIT IF PDM LINE GENERATED FLAP. | 4W | / | / |
| 95 | ~~040~~ MBPAB | REMOVE FOREFLAPS & ASSURE FORE FLAP (2) SUPPLEMENTAL SHEET WILL ACCOMPANY APPROPRIATE ITEM. See WCO 15154A. | DS | / | / |
| 95 | ~~050~~ MBPAB | REMOVE 2 EA UPPER AND 2 EA LOWER HONEYCOMB PANELS FOR ACCESS. (3) | DS | / | / |
| 2122 | ~~060~~ MBPCA | ACCOMPLISH INTERIOR WASH, UPPER AND (5) LOWER FLAP FOR CORROSION. MOVE TO MBPAB. REQ'D_____ NOT REQ'D_____ | 4W | / | / |
| 95 | ~~070~~ MBPAB | ACCOMPLISH SHAKEDOWN INSPECTION OF (6) FLAP IAW SOV. ANNOTATE DISCREPANCIES NOTE: THE ITEM(S) INPUT ON THIS 959 WILL BE OVERHAULED IN ACCORDANCE | DS | / | / |

(CONTINUED)

| 15153A - WORK CONTROL DOCUMEN... | | |

15153A * WORK CONTROL DOCUMENT * 1.DATE [illegible] PAGE [illegible]

| 15.DISP-16.PDN/ STATION | OP NO. | 17.WORK TO BE ACCOMPLISHED | 18.MECH | [illegible] | [illegible] |
|---|---|---|---|---|---|
| | | REQ'D_____ NOT REQ'D_____ | | | |
| 95 | 200 MBPAB | REPLACE CRACKED NOSE END RIBS. REQ'D_____ NOT REQ'D_____ | DS | / | |
| | 210 MBPAB | ACCOMPLISH CLOSEOUT & INSTALL [illegible] OUTBOARD HONEYCOMB PANEL. INCLUDES INTERNAL CORROSION TREATMENT & REPLACEMENT OF IMPAIRED FASTENERS. REQ'D_____ NOT REQ'D_____ | DS | / | / |
| | [illegible] | ACCOMPLISH CLOSEOUT & INSTALL [illegible] INBOARD HONEYCOMB PANEL. INCLUDES INTERNAL CORROSION TREATMENT AND REPLACEMENT OF IMPAIRED FASTENERS. REQ'D_____ NOT REQ'D_____ | | | |
| 95 | 230 MBPAB | REPLACE CRACKED OR WORN FLAP CARRIAGES. ENSURE FLAP IS IN FIXTURE PRIOR TO FINAL ATTACHMENT. REQ'D_____ NOT REQ'D_____ | DS | E | / |
| 95 | 240 MBPAB | REPAIR/REPLACE CRACKED OR DAMAGED FAIRINGS. REQ'D_____ NOT REQ'D_____ | DS | / | / |
| 95 | 250 MBPAB | REMOVE SEAL DEPRESSOR AND PLUG OPEN FASTENERS HOLES. REQ'D_____ NOT REQ'D_____ | DS | / | |
| 95 | 260 MBPAB | ACCOMPLISH CLOSEOUT AND INSTALL LOWER INBOARD HONEYCOMB PANEL, INCLUDES INTERNAL CORROSION TREATMENT AND REPLACEMENT OF IMPAIRED FASTENERS. REQ'D_____ NOT REQ'D_____ | DS | / | / |
| 95 | 270 ~~MBPAB~~ OK MBPAB | ACCOMPLISH CLOSEOUT AND INSTALL LOWER OUTBOARD HONEYCOMB PANEL. INCLUDES INTERNAL CORROSION TREATMENT AND REPLACEMENT OF IMPAIRED FASTENERS. REQ'D_____ NOT REQ'D_____ | DS | / | / |
| 95 | 280 MBPAB | INSTALL WING FLAP IN REPAIR JIG P/N 590CA1030. | DS | / | / |
| 95 | 290 MBPAB | ACCOMPLISH INSPECTION & ALIGNMENT CHECK PRIOR TO REMOVAL FROM JIG. | DS | E | / |
| 95 | 300 MBPAB | REMOVE FLAP FROM REPAIR FIXTURE. | DS | / | / |
| 95 | 310 MBPAB | REPLACE ALL [illegible] SHEARED, LOOSE PULLED OR [illegible] FASTENERS. REQ'D_____ NOT REQ'D_____ | DS | / | / |

15153A * WORK CONTROL DOCUMENT * 1.DATE 08055 PAGE 4 OF 6 PAGES

| 15.DISP-16.PDN/ STATION | OP NO. | 17.WORK TO BE ACCOMPLISHED | 18.[illegible] | 19.[illegible] | 20.[illegible] |
|---|---|---|---|---|---|
| 95 | 320 MBPAB | IF NO CRACKES ARE FOUND IN CARRIAGE REWORK DRAIN HOLES, IAW FIG. 1,2,&3 OF SOW. REQ'D_____ NOT REQ'D_____ | DS | / | / |
| | 330 MBPAB | REPAIR [illegible] CARRIAGES CAUSED BY PATCHES AND [illegible] A 3 3 FIG. 2 23 REQ'D_____ NOT REQ'D_____ | | | |
| 95 | 340 MBPAB | FILL ALL SKINS, TRAILING EDGES & SKIN PANEL ACCESS [illegible] WITH ENVIRONMENTAL SEALANT. REQ'D_____ NOT REQ'D_____ | | | |
| 95 | 350 MBPAB | CLEAN AND TREAT EXTERNAL CORROSION IAW 1C-135(K)A 3-4, PAGES [illegible] 4 22. OBSERVE ALL NOTES, CAUTIONS & WARNINGS. REQ'D_____ NOT REQ'D_____ MOVE TO MBPCB, BLDG. 2280 NOTE: OMIT IF PDM LINE GENERATED FLAP. | DS | / | / |
| 2280 | 360 MBPCB | FINAL WASH AND CORROSION TREAT. NOTE: OMIT IF PDM LINE GENERATED FLAP. REQ'D_____ NOT REQ'D_____ PAINT WING FLAP IAW 1C-135(K)A 3-1 1C-135(K)A 3-4, & 1 1 4, & 1 1 8 USING MIL-P 8/112 POLYSULFIDE PRIMER & HIGH GLOSS GRAY MIL-C-8326/COLOR 16473 PAINT NOTE: MARKINGS TO BE INSTALLED IAW DRAWING 5-87851. MOVE TO MBPAB, BLDG. 95 NOTE: OMIT IF PDM LINE GENERATED FLAP. | DS | / | / |
| 95 | 370 MBPAB | REPLACE ALL FLAP ATTACH BEARING SUPPORTS & SERVICE (CLEAN & GREASE) & REPLACE BEARINGS. REQ'D_____ NOT REQ'D_____ | DS | / | / |
| 95 | 380 MBPAB | REPLACE DEFECTIVE FOREFLAP ATTACH NUTPLATES IN CARRIAGE ASSY. REQ'D_____ NOT REQ'D_____ CAUTION: WHEN OVERHAULING FLAP ASSY. 156009609837FL & 156009609838FL, IT IS MANDATORY TO USE THE LASTEST PERFERRED FOREFLAPS IN ALL POSITIONS | DS | / | |
| 95 | 390 MBPAB | INSTALL FOREFLAPS AND ASSURE INST. MEASUREMENTS AND POSITIONS IS IAW DRAWING 5-87851 & 1C-135(K)A-2 8 FIG. 5 61. NOTE: FLAP ASSY. 156000[illegible]101FL WILL HAVE FOREFLAPS P/N 65-7360 5 | DS | / | / |

(CONTINUED)

| 1.DI6OA WORK CONTROL DOCUMENT | 3.DATE 080CT85 | FASL | OR | PAGE |
|---|---|---|---|---|
| 15.DISP 16.PDN/ | | | | |

| STATION/OP NO. | 17.WORK TO BE ACCOMPLISHED | 18.MAN/CREW |
|---|---|---|
| | OR -3127 AND 65-7360- / AND 65-7460- 3129 INSTALLED. FLAP ASSY. 1560006606181TL WILL HAVE FOREFLAPS P/N 65-7359 IN LIEU OF -3127 AND 65-7460-6 OR -3128 AND 65-7460-5 -3129 | |
| 45 700 MBPAB | REPLACE ANY WORN OR DAMAGED SEALS. KLO D_____ POT KLO'D_____ NOTE: NON STOCKLISTED PARTS W/ A/N WILL BE LOCALLY FABRICATED IF AVAILABLE. NOTE: OVERHAUL OF FLAP ASSY SHALL BE ACCOMPLISHED IAW TWO 5 87UP-1 & 2ND SUCCATOOO, TO INSURE CORRECT FUNCTION & ALIGNMENT. REMOVE OR MORE THAN 2 PANELS AT ONE TIME WITH ASSY THE FLAP TO BE MOUNTED IN FIXTURE 5705J1030. NOTE: OLD SKINS & PANELS REMOVED AS TEMPLATES TO DETERMINE SIZE, LOCATION & SPACING OF RIVETS HOLES. NOTE: REPLACEMENT OF HONEYCOMB PANELS THAT REQUIRE EDGE TRIMMING WILL HAVE THOSE EDGES RESEALED PRIOR TO INSTALLATION WITH MIL-S-81733. LOWER PANELS THAT REQUIRE DRAIN HOLES WILL HAVE THE EDGES OF THE SEALED BEING CAREFUL NOT TO LET EXCESS SEALER CREATE A DAMMING EFFECT. ALL FASTENERS WILL BE INST. WET USING MIL-S-81733 (MIL-S-8802) OR EPOXY PAINT MIL P2337 MAY BE USED AS AN OPTION. | D E |
| 75 730 MBPAB | WORK COMPLETED CONDITION TAG DATE_____ IAW AFM 67-1 MOVE TO CRATING NOTE: MOVE TO AIRCRAFT IF FROM LINE GENERATED FLAP. SERIAL#_____ DATE_____ NOTE: PART WILL HAVE OC-ALC FORM 586 587, & 588 IDENTIFICATION LABELS APPLIED TO COMPLETE ITEM IAW AFLCR 66-51. ACCEPTANCE DATE ON THE LABEL ALONG WITH "M" STAMP TO THE PERSON PERFORMING THE OVERHAUL. CAUTION: SURFACE TO WHICH LABELS ARE APPLIED MUST BE FREE OF DIRT | D E |

| COORDINATION | DATE |
|---|---|
| MABEFS MICHAEL FRANCE | 23 FEB 88 |
| MABSFS PHIL DUNCAN | 24 FEB 88 |
| MABPAB M.A. MOODY | 25 FEB 88 |

(CONTINUED)

| 15153A * WORK CONTROL DOCUMENT | | | | PAGE 1 OF 1 |
|---|---|---|---|---|
| 15.OISP-16.PDN/ | | | | |
| STATION | OP NO. | 17.WORK TO BE ACCOMPLISHED | | 18.MECH. |
| | | MAQBFA TED HAYES | 23 FEB 88 | |

NOTE:

This FOREFLAP COMES OFF 15153A AT OPERATION 40 OR 30 in the NEW RESEQUENCE. AND IS ASSY in OPS 390.

# FLOW PROCESS CHART

SUBJECT WING FLAP, OUTBOARD FORE FLAP DATE 4/5/89

PCN: 15188A WCD: 15154A WCDDATE: 88055
15189A

CHART BEGINS PAGE 1 OF 1

CHART ENDS PREPARED BY: R. BOLANOS

| WCD OP # | SYMBOLS | DESCRIPTION |
|---|---|---|
| | ○ ⇨ ● □ ▽ | DELAY MABPAB |
| | ○ ● D □ ▽ | MOVE TO WASH / STRIP MABPCA |
| | ○ ⇨ ● □ ▽ | DELAY |
| 05 | ● ⇨ D □ ▽ | STRIP & WASH 2122 MABPCA |
| | ○ ⇨ ● □ ▽ | DELAY |
| | ○ ● D □ ▽ | MOVE TO X-RAY (Form 30) 3001 MABCIA |
| | ○ ⇨ ● □ ▽ | DELAY |
| 20 | ● ⇨ D □ ▽ | X-RAY FORE FLAP |
| | ○ ⇨ ● □ ▽ | DELAY |
| | ○ ● D □ ▽ | MOVE TO SHEETMETAL 95 MABPAB |
| | ○ ⇨ ● □ ▽ | DELAY |
| 30 | ● ⇨ D □ ▽ | R/R PIN |
| 40 | ◌ ⇨ D ■ ▽ | SHAKEDOWN ACC EYE |
| 50 | ○ ⇨ D ■ ▽ | CHECK FOR CORROSION |
| 55 | ● ⇨ D □ ▽ | R/R BRACKETS |
| 60 | ● ⇨ D □ ▽ | R/R EXTERIOR SKINS & CLEAN |
| 80 | ● ⇨ D □ ▽ | R/R RIBS |
| 90 | ● ⇨ D □ ▽ | R/R END ATTACH PLATE |
| 100 | ● ⇨ D □ ▽ | R/R INTERNAL RIB |
| 110 | ● ⇨ D □ ▽ | REPLACE RUB STRIP |
| 12 | ● ⇨ D □ ▽ | REPLACE DEFECTIVE RIVETS |
| 130 | ● ⇨ D □ ▽ | " CRACKED TRAILING EDGE EXTRUSION |
| | ○ ⇨ ● □ ▽ | DELAY |
| | ○ ● D □ ▽ | MOVE TO WASH / PAINT 2280 MABPCD |
| | ○ ⇨ ● □ ▽ | DELAY |
| 140 | ● ⇨ D □ ▽ | FINAL WASH & TREAT FOR CORROSION |
| 150 | ● ⇨ D □ ▽ | PAINT |
| | ○ ⇨ ● □ ▽ | DELAY |
| | ○ ● D □ ▽ | MOVE TO SHEETMETAL 95 MABPAB |

| WCD OP # | SYMBOLS | DESCRIPTION |
|---|---|---|
| | ○ ⇨ ● □ ▽ | DELAY |
| LO LS | ● ⇨ D □ ▽ | WORK COMPLETE TAG |
| | ○ ⇨ ● □ ▽ | DELAY |
| | ○ ● D □ ▽ | IF PDM MOVE TO AIRCRAFT LINE OTHERWISE MOVE TO CRATING |
| | ○ ⇨ ● □ ▽ | |
| | ○ ⇨ D □ ▽ | |
| | ○ ⇨ D □ ▽ | |
| | ○ ⇨ D

| 15154A | * WORK CONTROL DOCUMENT * [illegible] | 1.DATE [illegible] | PAGE [illegible] |
|---|---|---|---|

| 2.ORIG/PROD NR | 3.QUANTITY | 4.PROD SECTION/RCC | 5.DATE SCHED | 6.DATE [illegible] |
|---|---|---|---|---|
| | | MABPAB | 89095 | |

| 7.PART NUMBER | 9.ITEM SERIAL NR | 8/12.TECH DATA/OPTIONAL |
|---|---|---|
| | | REQUIRED. |
| | | FORE FLAP SUPPLEMENT |
| 10.MOD. DESIGN/SERIES | 11.STOCK NR | [illegible] 150 |
| C 135 | | TECH DATA/OPTIONAL |
| | | FILL IN ANY ADD'L WORK |
| 13.MISC | 14.NOUN/END ITEM NOUN | |

| P/N | | | |
|---|---|---|---|
| [illegible] | [illegible] | 15600[illegible] | [illegible] |
| [illegible] | [illegible] | [illegible] | [illegible] |
| 5 8/851 | 153 | 1560006210[illegible]FL | 15171A |
| 5 8/851 | 155 | 1560006470[illegible]FL | 15176A |
| 5 8/851 | 154 | 1560006470304FL | 15177A |
| 5 8/851 | 155 | 1560006566180FL | [illegible] |
| 5 8/851 | 156 | 1560006566181FL | 15189A |
| 5 8/851 | 159 | 1560006566204FL | 15195A |
| 5 8/851 | 160 | 1560006566205FL | 15196A |
| 5 8/851 | 163 | 1560009609037FL | 15255A |

| 15.DISP STATION | 16.PDN/ OP NO. | 17.WORK TO BE ACCOMPLISHED | 18.MECH | 19"P" | 20"Q" |
|---|---|---|---|---|---|
| 2122 | 005 MBPCA | STRIP AND WASH FORE FLAP IAW 1C-135(K)A-3-4 MOVE TO MCCIA | 4W | / | / |
| 3001 | 020 MCCIA | X-RAY FOR FLAP, IF SKIN IS NOT REMOVED. NO STAMP REQUIRED IAW 1C 135-36 SECT II PART 2. | KN | N | / |
| 95 | 030 MABPAB | IF P/N 65-7360-7 OR 8 IS INSTALLED REPLACE WITH 65-7360 3129 & 3130 REQ'D_____NOT REQ'D_____ | DS | / | / |
| 95 | 040 MBPAB | ACC E&I SHAKEDOWN | DS | / | / |
| 95 | 045 MBPAB | CHECK FOREFLAP FOR CORROSION AND WORK IF ANY IS FOUND REQ'D_____ NOT REQ'D_____ | DS | / | / |
| 95 | 055 MBPAB | CHECK MOUNTING HOLES IN ATTACHMENT BRACKET TO SEE IF WITHIN TOLERANCES. REQ'D_____ NOT REQ'D_____ | DS | / | / |
| 95 | 060 MABPAB | REPAIR/REPLACE EXTERIOR SKINS IAW 1C-135(K)A-3-1, FIG 10-5 (INCLUDES CLEAN & CLOSEOUT). REQ'D_____NOT REQ'D_____ | DS | / | / |
| 95 | 080 MABPAB | REPLACE END RIB. REQ,D_____ NOT REQ,D_____ | DS | / | / |
| 95 | 090 MABPAB | REPLACE END AT[illegible] PLATE. REQ,D _____ NOT REQ,D_____ | DS | / | / |

15154A * WORK CONTROL DOCUMENT * MTSTR 1.DATE 00055 PAGE 2 [illegible]

[illegible] 16. [illegible]

| | [illegible] NO. | 17.WORK TO BE ACCOMPLISHED | 18.MECH | 19"P" | 20"[illegible]" |
|---|---|---|---|---|---|
| 95 | 100 MABPAB | REPLACE INTERNAL RIBS OR FIELD REPAIRED RIBS. REQ,D_____ NOT REQ,D_____ | DS | | / |
| 95 | 110 MABPAB | REPLACE RUB STRIPS NO._____ REQ,D_____ NOT REQ,D_____ | DS | | / |
| 95 | 120 MABPAB | REPLACE MISSING OR DEFECTIVE RIVETS. REQ,D_____ NOT REQ,D_____ | DS | | / |
| 95 | 130 MABPAB | REPLACE [illegible] RAILING EDGE EXTRUSION. REQ,D_____ NOT REQ,D_____ MOVE TO MBPCD. | DS | | |
| 2[illegible] | 140 MBPCD | FINAL WASH & CORROSION TREAT NOTE: UNIT IF PDM LINE GENERATED FLAP | SB | | / |
| 2[illegible] | 150 MBPCD | PREPARE & PAINT JAW IC-[illegible]A-3 4 & 1 1 0 USING MIL P 87112 POLYSULFIDE PRIMER & HIGH GLOSS GRAY MIL-O-83286 COLOR 16473 PAINT. UNIT IF PDM LINE GENERATED FLAP. MOVE TO MABPAB,BLDG.75 | SB | | / |
| 95 | 160 MBPAB | NOTE: MOVE TO AIRCRAFT SERIAL#_____ DATE_____ IF PDM LINE GENERATED FLAP. | DS | | / |
| 95 | 165 MBPAB | WORK COMPLETED, CONDITION TAG JAW AFM 67-1. MOVE TO CRATING. DATE_____ | DS | L | / |
| | 170 | MABEFS MICHAEL TITANIC 23 FEB 88<br>MABSFS PHIL DUNCAN 23 FEB 88<br>MABPAB M. A. MCCOY 23 FEB 88<br>MAQBF TED HAYES 23 FEB 88 | | | |

| FIGURE & INDEX NO. | PART NUMBER | DESCRIPTION 1 2 3 4 5 6 7 | UNITS PER ASSY | USE ON CODE |
|---|---|---|---|---|
| 1892 - | | | | |
| | 50-4694-1 | TAIL CONE ASSY, STATION 301.10 TO 341.25, BOOM . . . . (FOR REPLACEMENT ORDER 50-4694-18) (FOR NHA SEE FIG. 1890) | REF | A |
| | 50-4694-18 | TAIL CONE ASSY, STATION 301.10 TO 341.25, BOOM (FOR . . NHA SEE FIG. 1890) | REF | |
| | 50-4694-20 | TAIL CONE ASSY, STATION 301.10 TO 341.35, BOOM (FOR . . SPARES ONLY) (PARTS KITS AVAILABLE) | REF | |
| | | PARTIAL BREAKDOWN FOLLOWS | | |
| 1 | 50-5125 | . LIGHT INSTL, TAIL CONE, BOOM (FOR BREAKDOWN SEE . . . FIG. 1893) | REF | C |
| 1 | 50-5125-1 | . LIGHT INSTL, TAIL CONE, BOOM (FOR BREAKDOWN SEE . . . FIG. 1893) | REF | D |
| 2 | 5-961 2-53 | . HYDRAULIC INSTL, FLYING BOOM (FOR BREAKDOWN SEE . . . FIG. 1929) | REF | |
| | 50-4694-2 | . STRUCTURE ASSY, TAIL CONE, STATION 301.10 TO 341.25, BOOM | REF | A |
| | 50-4694-19 | . STRUCTURE ASSY, TAIL CONE, STATION 301.10 TO 341.25, BOOM (USED ON 50-4694-18) | REF | B |
| | 50-4694-21 | . STRUCTURE ASSY, TAIL CONE, STATION 301.10 TO 341.25, BOOM (USED ON 50-4694-20) | REF | |
| 3 | NAS514P632-6 | . . SCREW (RD) (LH) . . . . . | 2 | G |
| 4 | NAS679A06L | . . NUT (RD) (LH) . . . . . | 2 | G |
| 5 | 50-4694-12 | . . BUMPER, TAIL CONE, STATION 301.10 TO 341.25, BOOM . | REF | H |
| 6 | 50-4694-11 | . . BUMPER, TAIL CONE, STATION 301.10 TO 341.25, BOOM . | REF | J |
| 6 | 50-4694-16 | . . BUMPER, TAIL CONE, STATION 301.10 TO 341.25, BOOM . | 1 | K |
| 7 | 50-4694-10 | . . STRAP, TAIL CONE, STATION 301.10 TO 341.25, BOOM . (MAKE FROM 2024-T6 ALUM CLAD 0.051 THK. APPROX. SIZE 1.10 X 1.00) | REF | G |
| 8 | 50-4694-9 | . . SKIN, TAIL CONE, STATION 301.10 TO 341.25, BOOM . . | 1 | |
| | 50-4694-3 | . . WELD ASSY, TAIL CONE, STATION 301.10 TO 341.25, . . BOOM | REF | L |
| | 50-4694-15 | . . WELD ASSY, TAIL CONE, STATION 301.10 TO 341.25, . . BOOM | REF | M |
| 9 | 50-4694-4 | . . . SPLICE, TAIL CONE, STATION 301.10 TO 341.25, BOOM | REF | L |
| 9 | 50-4694-14 | . . . SPLICE, TAIL CONE, STATION 301.10 TO 341.25, BOOM | REF | M |
| 10 | 50-4694-5 | . . . SPLICE, TAIL CONE, STATION 301.10 TO 341.25, BOOM | REF | |
| 11 | 50-4694-6 | . . . SPLICE, TAIL CONE, STATION 301.10 TO 341.25, BOOM | REF | |
| 12 | 50-4694-7 | . . . SKIN, LOWER, TAIL CONE, STATION 301.10 TO 341.25 BOOM (LH) | 1 | |
| 13 | 50-4694-8 | . . . SKIN, LOWER, TAIL CONE, STATION 301.10 TO 341.25 BOOM (LH) | 1 | |
| 14 | 50-4694-13 | . . FILLER, TAIL CONE, STATION 301.10 TO 341.25 . . . . | REF | N |
| 15 | 66-2944 | . . CUP, DRAIN, TAIL CONE, BOOM FAIRING . . . . . | 1 | P |
| | 50-5135 | . . FRAME INSTL, STATION 301.10, BOOM (USED ON . . . . 50-4694-2) | REF | A |
| | 50-5135-6 | . . FRAME INSTL, STATION 301.10, BOOM (USED ON . . . . 50-4694-19) | REF | B |
| | 50-5135-9 | . . FRAME INSTL, TAIL CONE, STATION 301.10, BOOM (USED ON 50-4694-21) | REF | |
| 16 | 50-5135-3 | . . . SPLICE, TAIL CONE, STATION 301.10, BOOM . . . . . | 1 | |
| 17 | 50-5135-4 | . . . SPLICE, TAIL CONE, STATION 301.10, BOOM . . . . . | REF | |
| 18 | 50-5135-5 | . . . FILLER, TAIL CONE, STATION 301.10, BOOM . . . . . | 2 | |
| 19 | 50-5135-5 | . . . FILLER, TAIL CONE, STATION 301.10, BOOM (USED ON 50-5135, -6) | 16 | |
| 20 | 50-5135-10 | . . . TAB, TAIL CONE, STATION 301.10, BOOM (USED ON . . 50-5135-9) | REF | |
| 21 | 50-5135-1 | . . . FRAME, HALF, TAIL CONE, STATION 301.10, BOOM . . | 1 | A |
| 22 | 50-5135-7 | . . . FRAME, HALF, TAIL CONE, STATION 301.10, BOOM . . | 1 | B |
| 23 | 50-5135-2 | . . . FRAME, HALF, TAIL CONE, STATION 301.10, BOOM . . | 1 | A |
| 24 | 50-5135-8 | . . . FRAME, HALF, TAIL CONE, STATION 301.10, BOOM . . | 1 | B |
| | 50-6037 | . . FRAME INSTL, TAIL CONE, STATION 309.15, BOOM . . . | REF | |
| 25 | 50-6037-4 | . . . CHANNEL, FRAME SPLICE, TAIL CONE, STATION . . . . 309.15, BOOM | 1 | |
| 26 | 50-6037-3 | . . . CHANNEL, FRAME SPLICE, TAIL CONE, STATION . . . . 309.15, BOOM | 1 | |
| 27 | 50-6037-5 | . . . STRIP, FRAME REINFORCING, TAIL CONE, STATION . . 309.15, BOOM | REF | |
| 28 | 50-6037-6 | . . . STRIP, FRAME REINFORCING, TAIL CONE, STATION . . 309.15, BOOM | REF | |
| 29 | 50-6037-7 | . . . BRACKET, FRAME TEE, TAIL CONE, STATION . . . . . 309.15, BOOM | 1 | P |
| 30 | 50-6037-1 | . . . FRAME, HALF, TAIL CONE, STATION 309.15, BOOM . . | 1 | |
| 31 | 50-6037-2 | . . . FRAME, HALF, TAIL CONE, STATION 309.15, BOOM . . | 1 | |

# Aerial Refueling Boom

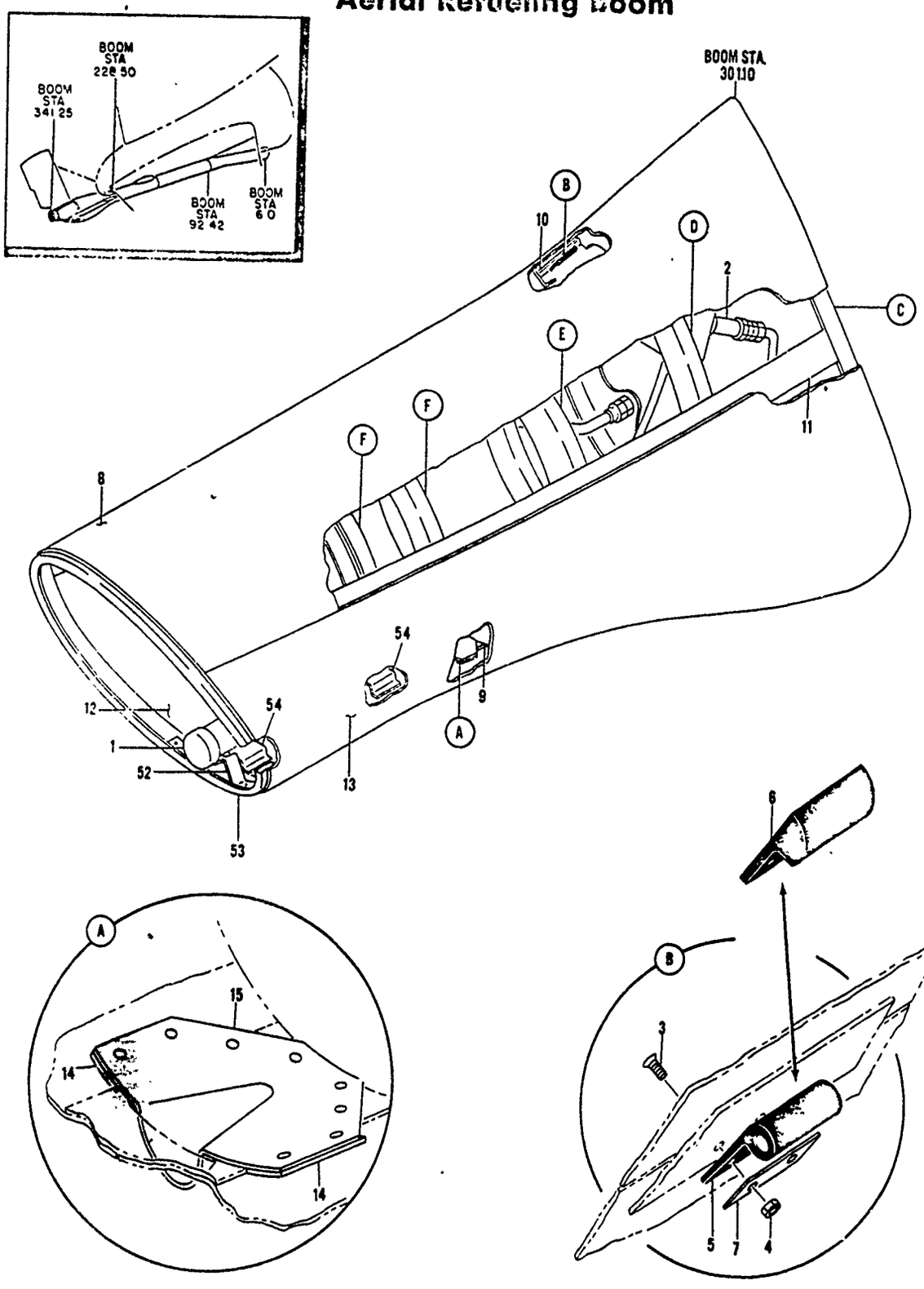


2200-1892a

*Figure 1892. Boom Station 301.10 to 341.25 Tail Cone Assembly (Sheet 1 of 3)*

# Aerial Refueling Boom

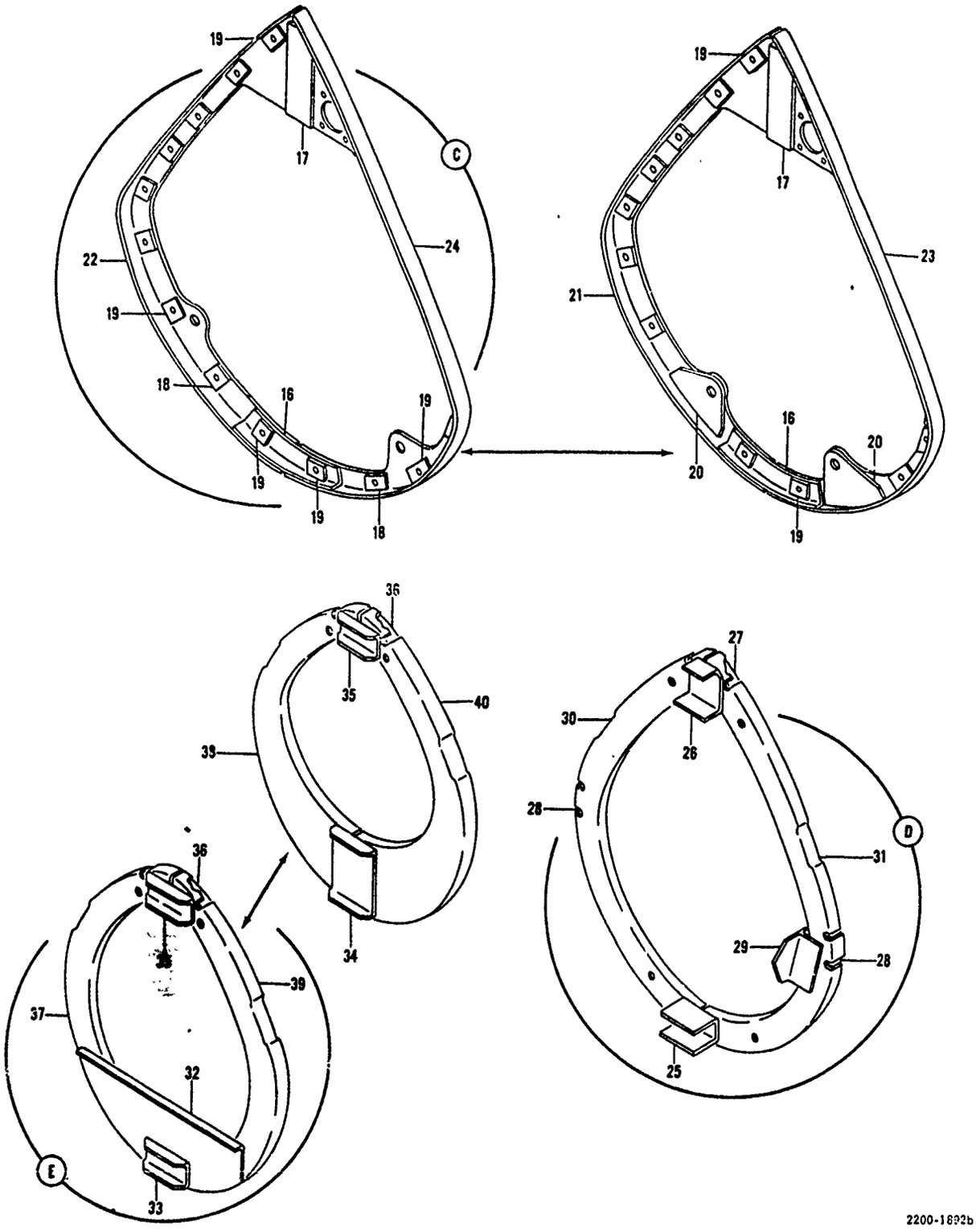


*Figure 1892. Boom Station 301.10 to 341.25 Tail Cone Assembly (Sheet 2 of 3)*

# Aerial Refueling Boom

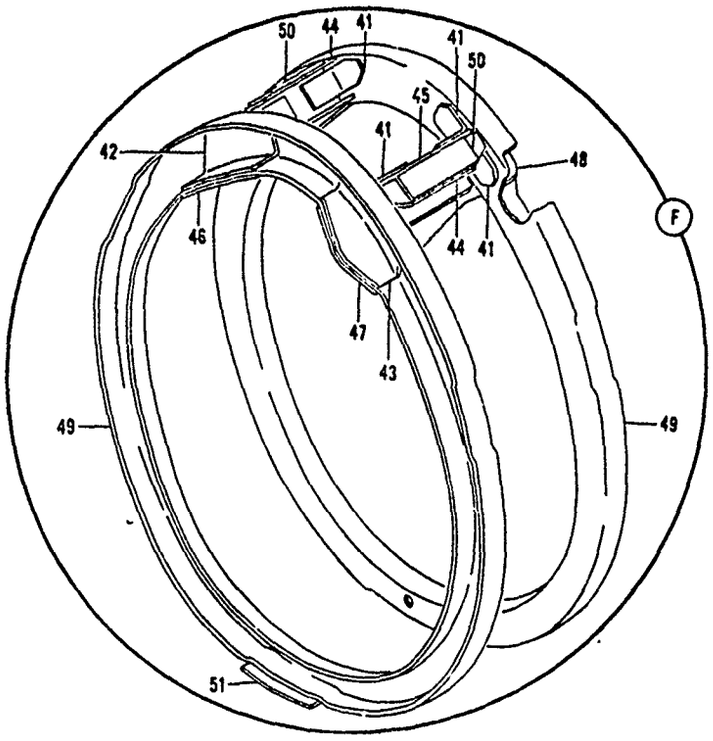


2200-1892c

*Figure 1892. Boom Station 301.10 to 341.25 Tail Cone Assembly (Sheet 3 of 3)*

| FIGURE & INDEX NO. | PART NUMBER | 1 2 3 4 5 6 7 DESCRIPTION | UNITS PER ASSY | USE ON CODE |
|---|---|---|---|---|
| 1892 - | | | | |
| | 50-6034 | . . FRAME INSTL, FAIRING, STATION 317.20, BOOM . . . . | REF | L |
| | 50-6034-6 | . . FRAME INSTL, FAIRING, STATION 317.20, BOOM . . . . | REF | M |
| 32 | 66-2936 | . . . DAM, FUEL, STATION 317.20, BOOM . . . . . | REF | P |
| 33 | 50-6034-3 | . . . SPLICE, CHANNEL, FAIRING FRAME, STATION . . . . . 317.20, BOOM | REF | L |
| 34 | 50-6034-9 | . . . SPLICE, CHANNEL, FAIRING FRAME, STATION . . . . . 317.20, BOOM | 1 | M |
| 35 | 50-6034-4 | . . . SPLICE, CHANNEL, FAIRING FRAME, STATION . . . . . 317.20, BOOM | 1 | |
| 36 | 50-6034-5 | . . . SPLICE, STRAP, FAIRING FRAME, STATION . . . . . 317.20, BOOM | 1 | |
| 37 | 50-6034-1 | . . . FRAME, FAIRING HALF, STATION 317.20, BOOM . . . . | REF | L |
| 38 | 50-6034-8 | . . . FRAME, FAIRING HALF, STATION 317.20, BOOM . . . . | 1 | M |
| 39 | 50-6034-2 | . . . FRAME, FAIRING HALF, STATION 317.20, BOOM . . . . | REF | L |
| 40 | 50-6034-7 | . . . FRAME, FAIRING HALF, STATION 317.20, BOOM . . . . | 1 | M |
| | 50-6012 | . . STRUCTURE INSTL, SUPPORT, FUEL DUMP, TAIL CONE . . | REF | |
| 41 | 50-6012-7 | . . . CLIP, SUPPORT STRUCTURE, FUEL DUMP, TAIL CONE . . (KD) | REF | |
| 42 | 50-6012-5 | . . . ANGLE, SUPPORT STRUCTURE, FUEL DUMP, TAIL CONE . | 1 | |
| 43 | 50-6012-6 | . . . ANGLE, SUPPORT STRUCTURE, FUEL DUMP, TAIL CONE . | 1 | |
| 44 | 50-6012-3 | . . . ANGLE, SUPPORT STRUCTURE, FUEL DUMP, TAIL CONE . | 2 | |
| 45 | 50-6012-4 | . . . ANGLE, SUPPORT STRUCTURE, FUEL DUMP, TAIL CONE . | 2 | |
| 46 | 50-6012-1 | . . . SHEAR TIE, SUPPORT STRUCTURE, FUEL DUMP, . . . . TAIL CONE | REF | |
| 47 | 50-6012-2 | . . . SHEAR TIE, SUPPORT STRUCTURE, FUEL DUMP, . . . . TAIL CONF | REF | |
| 48 | 50-6012-9 | . . . FILLER, SUPPORT STRUCTURE, FUEL DUMP, TAIL CONE . | REF | |
| 49 | 50-6012-8 | . . . FRAME, SUPPORT STRUCTURE, FUEL DUMP, TAIL CONE . | 2 | |
| 50 | BACS40A15-48 | . . . SHIM, LAM, 0.030 THK (ALTERNATE BACS40B15-48) . . (KD) | AR | |

2-5566

| FIGURE & INDEX NO. | PART NUMBER | DESCRIPTION<br>1 2 3 4 5 6 7 | UNITS PER ASSY | USE ON CODE |
|---|---|---|---|---|
| 1892 - | | | | |
| 51 | BACS40B13-320 | . . . SHIM, LAM, 0.062 THK (ALTERNATES BACS40C13-320, . BACS40D13-320) (KD) | AR | |
| | 50-6043 | . . FRAME INSTL, FAIRING, STATION 333.46 TO . . . . . 341.25, BOOM | REF | E |
| | 50-6043-3 | . . FRAME INSTL, FAIRING, STATION 333.46 TO . . . . . 341.25, BOOM | REF | N |
| | 50-6043-5 | . . FRAME INSTL, FAIRING, STATION 333.46 TO . . . . . 341.25, BOOM | REF | M |
| 52 | 50-6043-2 | . . . BRACKET, FRAME LIGHT SUPPORT, FAIRING, STATION . 333.46 TO 341.25, BOOM | REF | L |
| 53 | 50-6043-1 | . . . FRAME, FAIRING, STATION 333.46 TO 341.25, BOOM . | REF | E |
| 53 | 50-6043-4 | . . . FRAME, FAIRING, STATION 333.46 TO 341.25, BOOM . | REF | N |
| 53 | 50-6043-6 | . . . FRAME, FAIRING, STATION 333.46 TO 341.25, BOOM . | 1 | M |
| 54 | 66-18464-1 | . . . BRACKET, NOZZLE LIGHT SUPPORT, REFUELING BOOM . . (MAKE FROM 9535 2024-O CLAD QQ-A-362 TEMPER 4.0 X 1.5 X 0.032) | 2 | |
| | | A BOOM UNIT 1-1 THRU 1-119 | | |
| | | B BOOM UNIT 3-120 AND ON | | |
| | | C BOOM UNIT 1-1 THRU 1-99 | | |
| | | D BOOM UNIT 1-100 AND ON | | |
| | | E BOOM UNIT 1-1 THRU 1-3 | | |
| | | F BOOM UNIT 1-4 THRU 1-119 | | |
| | | G BOOM UNIT 1-5 AND ON | | |
| | | H BOOM UNIT 1-5 THRU 1-11 | | |
| | | J BOOM UNIT 1-12 THRU 1-29 | | |
| | | K BOOM UNIT 1-30 AND ON | | |
| | | L BOOM UNIT 1-1 THRU 1-16 | | |
| | | M BOOM UNIT 1-17 AND ON | | |
| | | N BOOM UNIT 1-4 THRU 1-16 | | |
| | | P BOOM UNIT 1-4 AND ON | | |

# FLOW PROCESS CHART

SUBJECT Beam Tail Cone DATE 4/5/89

PCN: 15175A WCD: 15175A WCDDATE: 89073

CHART BEGINS Operation 010

CHART ENDS Operation 340 PREPARED BY: Tim Hall

| | SYMBOLS | DESCRIPTION |
|---|---|---|
| 010 | ● ◇ D □ ▽ | Receive and Uncrate 2122 MABPCD |
| | ○ ◇ ◗ □ ▽ | Delay |
| | ○ ◗ D □ ▽ | Move to Bldg 95 95 MABMAB |
| | ○ ◇ ◗ □ ▽ | Delay |
| 020 | ● ◇ D □ ▽ | Remove Hyd Tubing & valves |
| 040 | ● ◇ D □ ▽ | Remove all wiring & lights |
| | ○ ◇ ◗ □ ▽ | Delay |
| | ○ ◗ D □ ▽ | Move to 2122 |
| | ○ ◇ ◗ □ ▽ | Delay |
| 050 | ● ◇ D □ ▽ | Strip paint 2122 MABBCB |
| | ○ ◇ ◗ □ ▽ | Delay |
| | ○ ◗ D □ ▽ | Move to 95 95 MABCAB |
| | ○ ◇ ◗ □ ▽ | Delay |
| 060 | ● ◇ D □ ▽ | Shakedown |
| 070 | ● ◇ D □ ▽ | Install Tail Cone |
| 080 | ● ◇ D □ ▽ | Repair Skin -9 |
| 090 | ● ◇ D □ ▽ | Replace splice |
| 100 | ● ◇ D □ ▽ | Repair Skin -8 |
| 110 | ● ◇ D □ ▽ | Replace -14 splice |
| 120 | ● ◇ D □ ▽ | Repair Skin |
| 130 | ● ◇ D □ ▽ | Replace -5 splice |
| 140 | ● ◇ D □ ▽ | Smooth out scratches, gouges |
| 150 | ● ◇ D □ ▽ | Repair -7 Frame Half |
| 160 | ● ◇ D □ ▽ | Repair Frame Half -8 S138 |
| 170 | ● ◇ D □ ▽ | Repair -1 Frame Half 6037 |
| 180 | ● ◇ D □ ▽ | Repair -2 Frame Half Frame half |
| 190 | ● ◇ D □ ▽ | Repair 6034-7 Frame Half |
| 200 | ● ◇ D □ ▽ | Repair 6034-8 Frame Half |
| 210 | ● ◇ D □ ▽ | Repair FWD. Frame Supt. 6012-8 |
| 220 | ● ◇ D □ ▽ | Repair AFT Frame Supt 6012-8 |
| 230 | ● ◇ D □ ▽ | Repair Frame 6043-6 |
| 240 | ● ◇ D □ ▽ | Repair Defective fasteners elec Nut plate |
| 250 | ● ◇ D □ ▽ | Replace cup drain |
| 260 | ● ◇ D □ ▽ | Replace bumper 469M-11 |
| 270 | ● ◇ D □ ▽ | Replace Strap 4694-10 |
| 280 | ● ◇ D □ ▽ | Replace support |
| 290 | ● ◇ D □ ▽ | Replace 2 eq. isolator Vibratec |
| 300 | ● ◇ D □ ▽ | Treat corrosion |
| 310 | ● ◇ D □ ▽ | Remove Tail Cone From Fixture |
| | ○ ◇ ◗ □ ▽ | Delay |
| | ○ ◗ D □ ▽ | Move To Bldg 2280 2280 MABBCB |
| | ○ ◇ ◗ □ ▽ | Delay |
| 320 | ● ◇ D □ ▽ | Wash |
| 330 | ● ◇ D □ ▽ | Paint |
| 340 | ● ◇ D □ ▽ | Paint - anti-corrosion |
| | ○ ◇ ◗ □ ▽ | Delay |
| | ○ ◗ D □ ▽ | Move to Bldg 95 95 MABPAA |
| | ○ ◇ ◗ □ ▽ | Delay |
| 360 | ● ◇ D □ ▽ | Inspect Wiring & Light |
| 370 | ● ◇ D □ ▽ | Repair Wiring |
| 380 | ● ◇ D □ ▽ | Repair Terminals |
| 390 | ● ◇ D □ ▽ | Repair Light Fixtures |
| 400 | ● ◇ D □ ▽ | Replace lamps |
| 410 | ● ◇ D □ ▽ | Conduct Continuity check |
| 420 | ● ◇ D □ ▽ | Reinstall Hyd. Tubing & valves |
| | ○ ◇ ◗ □ ▽ | Delay |
| 430 | ○ ◗ D □ ▽ | Move to MABPAB 95 MABPAB |
| | ○ ◇ ◗ □ ▽ | Delay |

see supplementary Sheet For 020 & 030

## FLOW PROCESS CHART

SUBJECT Beam Tail Cone DATE 4/5/89

PCN: 15175A WCD: 15175A WCDDATE: 89073

CHART BEGINS 010

CHART ENDS 4440 PREPARED BY: Tim Hall

| SYMBOLS | DESCRIPTION | SYMBOLS | DESCRIPTION |
|---|---|---|---|
| 4255 ○ ⇨ D □ ▽ | Check & repair Fuel Pump reach rainm condition Tag | ○ ⇨ D □ ▽ | |
| 4440 ○ ⇨ D □ ▽ | | ○ ⇨ D □ ▽ | |
|

Supplementary

## FLOW PROCESS CHART

SUBJECT Hyd. Tubing & Valves For 'Boom Tail Cone' DATE 4/5/89

PCN: 15175A WCD: 15175A WCDDATE: 89073

CHART BEGINS

CHART ENDS

PREPARED BY: Tim Hall

| | SYMBOLS | DESCRIPTION | SYMBOLS | DESCRIPTION |
|---|---|---|---|---|
| 210 | ● ⇨ D □ ▽ | Remove all Hyd Tubing & Valves 9S MADRAB | ○ ⇨ D □ ▽ | |
| | ○ ⇨ ◗ □ ▽ | Delay | ○ ⇨ D □ ▽ | |
| | ○ ◗ D □ ▽ | Move to Bldg 210 210 MADRAB | ○ ⇨ D □ ▽ | |
| | ○ ⇨ ◗ □ ▽ | Delay | ○ ⇨ D □ ▽ | |
| 230 | ○ ⇨ D ■ ▽ | Inspect | ○ ⇨ D □ ▽ | |
| | ○ ⇨ ◗ □ ▽ | Delay | ○ ⇨ D □ ▽ | |
| | ○ ◗ D □ ▽ | Move to Bldg 9S 9S MADENA | ○ ⇨ D □ ▽ | |
| 420 | ● ⇨ D □ ▽ | Reinstall Hyd Tubing & Valves | ○ ⇨ D □ ▽ | |
| | ○ ⇨ D □ ▽ |

15175A * WORK CONTROL DOCUMENT * MISTR 1.DATE 89073 PAGE 1 OF 4 PAGES

| 2.ORIG/PROD NR | 3.QUANTITY | 4.PROD SECTION/RCC | 5.DATE SCHLD | 6.DATE COMP |
|---|---|---|---|---|
| 15175A | | MBPAB | 89093 | |

| 7.PART NUMBER | 9.ITEM SERIAL NR | 8/12.TECH DATA/OPTIONAL |
|---|---|---|
| 50 4694-18 | | FILL IN ADD'L STATEMENTS |
| | | T.O. 6A3 4 3, 1-1A-14 |
| 10.MODEL/DESIGN/SERIES | 11.STOCK NR | STATEM NT OF WORK C/N: |
| KC-135 | 1560006317598FL | OC-1560FL/82-103/01 DATED |
| | | 25 SEP 86 |
| 13.MISC | 14.NOUN/END ITEM NOUN | T.O.1C 135(K)A-2-12-1 |
| | BOOM TAIL CONE | |
| | PHYLLIS HEALD/MABEBS/65265 | |

| 15.DISP STATION | 16.PDN/ OP NO. | 17.WORK TO BE ACCOMPLISHED | 18.MECH | 19"P" | 20"Q" |
|---|---|---|---|---|---|
| ~~95~~ 2122 | 010 ~~MBPAB~~ MBPCD | RECEIVE AND UNCRATE. MOVE TO BLDG 95, MBPAB. | | / | |
| 95 | 020 MBPAB | REMOVE ALL HYD. TUBING AND VALVES ROUTE TUBING TO MTPIM 3, BLDG 210 ON AFLC FORM 945 [illegible] called to 420. | | / | / |
| 210 | 030 MTPAB | CONDITION INSPECT & FUNCTIONAL TEST TUBING & VALVES. RETURN TO BLDG 95, MBSMS. | KN | / | / |
| 95 | 040 MBPAB | REMOVE ALL WIRING & LIGHTS. ATTACH WIRING HARNESS 959 ROUTE TO MBPDC. MOVE TAIL CONE TO BLDG 2122,MBPCA. | | / | / |
| 2122 | 050 MBPCA | STRIP ALL EXTERIOR & INTERIOR PAINT IAW T.O. 1C-135(K)A-3-4. MOVE TO BLDG 95. | | / | / |
| 95 | 060 MBPAB | ACCOMPLISH SHAKEDOWN INSPECTION IAW WORK STATEMENT ADD ANY ADD'L CALLOUTS AS REQUIRED. BLDG 95. | | / | / |
| 95 | 070 MBPAB | INSTALL TAIL CONE IN FIXTURE NO. 600CJ809 FOR WORK. FIXTURE NO. 8147573 MAY BE USED TO AID IN LOCATING NUT PLATE HOLES ON FRAMES 50-5135-7 AND 50-5135-8 | | / | / |
| 95 | 080 MBPAB | SKIN P/N 50-4694-9 REPAIR___REPLACE___NOT REQ'D___ | | L | |
| 95 | 090 MBPAB | REPLACE SPLICE P/N 50-4694-6 REQ'D_____ NOT REQ'D_____ | | / | / |
| 95 | 100 MBPAB | SKIN P/N 50-469[illegible]-3. REPAIR___REPLACE___NOT REQ'D___ | | E | / |
| 95 | 110 MBPAB | REPLACE SPLICE [illegible]0-4694-14. REQ'D_____ NOT REQ'D_____ | | / | / |

| 15175A * WORK CONTROL DOCUMENT * MSTR 1.DATE 090/3 | PAGE 2 OF 4 PAGES |
|---|---|

| 15.DISP-16.PDN/STATION | OP NO. | 17.WORK TO BE ACCOMPLISHED | 18.MECH | 19"I" | 20"Q" |
|---|---|---|---|---|---|
| 95 | 120 MBPAB | SKIN, P/N 50-4694-7.<br>REPAIR___REPLACE___NOT REQ'D___ | | E | / |
| 95 | 130 MBPAB | REPLACE SPLICE, P/N 50-4694-5.<br>REQ'D_____ NOT REQ'D_____ | | / | / |
| 95 | 140 MBPAB | SMOOTH OUT SCRATCHES, GOUGES, & ETC. IAW S.O.W PARA 3.2.5D. | | E | / |
| 95 | 150 MBPAB | FRAME HALF, P/N 50-5135-7.<br>REPAIR___REPLACE___NOT REQ'D___ | | / | |
| 95 | 160 MBPAB | FRAME HALF, P/N 50-5135-8.<br>REPAIR___REPLACE___NOT REQ'D___ | | / | / |
| 95 | 170 MBPAB | FRAME HALF P/N 50-6037-1.<br>REPAIR___REPLACE___NOT REQ'D___ | | / | / |
| 95 | 180 MBPAB | FRAME HALF P/N 50-6037-2<br>REPAIR___REPLACE___NOT REQ'D___ | | / | / |
| 95 | 190 MBPAB | FRAME HALF, P/N 50-6034-7<br>REPAIR___REPLACE___NOT REQ'D___ | | / | / |
| 95 | 200 MBPAB | FRAME HALF, P/N 50-6034-8<br>REPAIR____ REPLACE____ NOT REQ'D___ | | / | / |
| 95 | 210 MBPAB | FWD FRAME SUPT., P/N 50-6012-8<br>REPAIR_____ REPLACE_____NOT REQ'D___ | | E | / |
| 95 | 220 MBPAB | AFT FRAME SUPT., P/N 50-6012-8<br>REPAIR____ REPLACE____ NOT REQ'D____ | | E | / |
| 95 | 230 MBPAB | FRAME P/N 50-6043-6<br>REPAIR___REPLACE___NOT REQ'D____ | | / | / |
| 95 | 240 MBPAB | DEFECTIVE FASTENERS AND/OR NUT PLATE<br>REPAIR___REPLACE___NOT REQ'D___ | | / | / |
| 95 | 250 MBPAB | REPLACE CUP DRAIN, P/N 66-2944. | | / | / |
| 95 | 260 MBPAB | REPLACE BUMPER, P/N 50-4694-11. | | / | / |
| 95 | 270 MBPAB | REPLACE STRAP, P/N 50-4694-10 | | / | / |

15175A * WORK CONTROL DOCUMENT * MISTR 1.DATE 09075 PAGE 3 OF 4 PAGES

| 15.DISP STATION | 16.PDN/ OP NO. | 17.WORK TO BE ACCOMPLISHED | 18.MECH | 19"P" | 20"Q" |
|---|---|---|---|---|---|
| 95 | 280 MBPAB | REPLACE SUPPORT, LIGHT, P/N60-6662-1 | | / | / |
| [illegible] | 290 MBPAB | REPLACE [illegible], P/N [illegible] | | / | / |
| 95 | 300 MBPAB | REMOVE CORROSION AND TREAT IAW 1C-135(K)A_3-4. REQ'D___NOT REQ'D___ | | / | / |
| [illegible] | 310 MBPAB | REMOVE TAIL CONE FROM FIXTURE. MOVE TO BLDG 2280, MBPCB | | / | / |
| 2280 | 320 MBPCB | ACCOMPLISH FINAL WASH | | / | / |
| 2280 | 330 MBPCB | PAINT INTERIOR AND EXTERIOR WITH EPOXY PRIMER MIL-P 87112, FSN 8010 00-082-2477. | | / | / |
| 2280 | 340 MBPCB | PAINT EXTERIOR WITH ANTI-CORROSION FINISH MIL-C-83286-B, FSN 8010 00 693-2614.(STENCIL ON WARNING) MOVE TO BLDG. 95, MBPMA. | | / | / |
| 95 | 360 MBPAA | INSPECT WIRING AND LIGHTS IAW 6A3-4-3. REINSTALL ALL WIRING AND LIGHTS IAW DRAWING 5-96333. CONDUCT CONTINUITY CHECK ON INSTALLED HARNESS. ALSO REFERENCE T.O. 1-1A-14 AND T.O. 1C-135(K)A-2-12-1. | | / | / |
| 95 | 370 MBPAA | WIRING IAW 6A3-4-3 & DRAWING 5-9633 REPAIR___REPLACE___NOT REQ'D___ | | / | / |
| 95 | 380 MBPAA | TERMINALS REPAIR___REPLACE___NOT REQ'D___ | | / | / |
| 95 | 390 MBPAA | LIGHT FIXTURES. REPAIR___REPLACE___NOT REQ'D___ | | / | / |
| 95 | 400 MBPAA | REPLACE ALL LAMPS. | | / | / |
| 95 | 410 MBPAA | CONDUCT CONTINUITY CHECK ON COMPLETED ITEM. | | / | / |
| 95 | 420 MBPAA | REINSTALL HYDRAULIC TUBING & VALVES IN BOOM TAIL CONE ASSY IAW DRAWING 5-96162. | | / | / |
| 95 | 425 MBPAB | CHECK FULL DUMP MECHANISM. WITH MECHANISM ARM [illegible] AGAINST THE RUBBER BUMPER, MANUALLY MOVE THE MECHANISM ARM INBOARD TOWARD THE CENTERLINE OF THE BOOM ASSEMBLY TO DETERMINE WEAR. IF ARM PLAY | | / | / |

(CONTINUED)

| 15175A * WORK CONTROL DOCUMENT * MASTER 1.DATE 89073 | PAGE 4 OF 4 PAGES |
|---|---|

15.DISP-16.PDN/

| STATION | OP NO. | 17.WORK TO BE ACCOMPLISHED | 18.MECH | 19"P" | 20"Q" |
|---|---|---|---|---|---|
| | | EXCEEDS ALLOWABLE LIMITS OF 0.70, REPAIR FUEL DUMP MECHANISM ASSEMBLY. REF. T.O. 6A3-4-3, FIG 5-5. | | | |
| 95 | 430 MBPAA | ROUTE ITEM TO MBPAA WITH THIS 95?. | | / | / |
| 95 | 440 MBPAA | WORK COMPLETED. CONDITION TAG DATE_____MOVE TO CRATING. CONDITION TAGGED IAW AFM 67-1. NOTE: COMPLETE "REMARKS" COLUMN OF AFLC FORM 1574 IAW MAOI 66-4. NOTE: PART WILL HAVE DO-ALC FORMS 506,507, & 508 IDENTIFICATION LABELS APPLIED TO COMPLETED ITEM IAW AFLCR 66-51 ACCEPTANCE DATE ON THE LABEL ALONG WITH "M" STAMP OF THE PERSON PERFORMING THE OVERHAUL. CAUTION: SURFACES TO WHICH LABELS ARE APPLIED MUST BE FREE OF CONTAMINATION. | / | L | / |
| | | COURDINATION<br><br>MABEBS PHYLLIS HEALD 22 MARCH 89<br><br>MABSCS CONNIE WEBBER 22 MARCH 89<br><br>MABPAB JESSIE JACOBS 22 MARCH 89<br><br>MAQBF TED HAYES 22 MARCH 89 | | | |

15178A

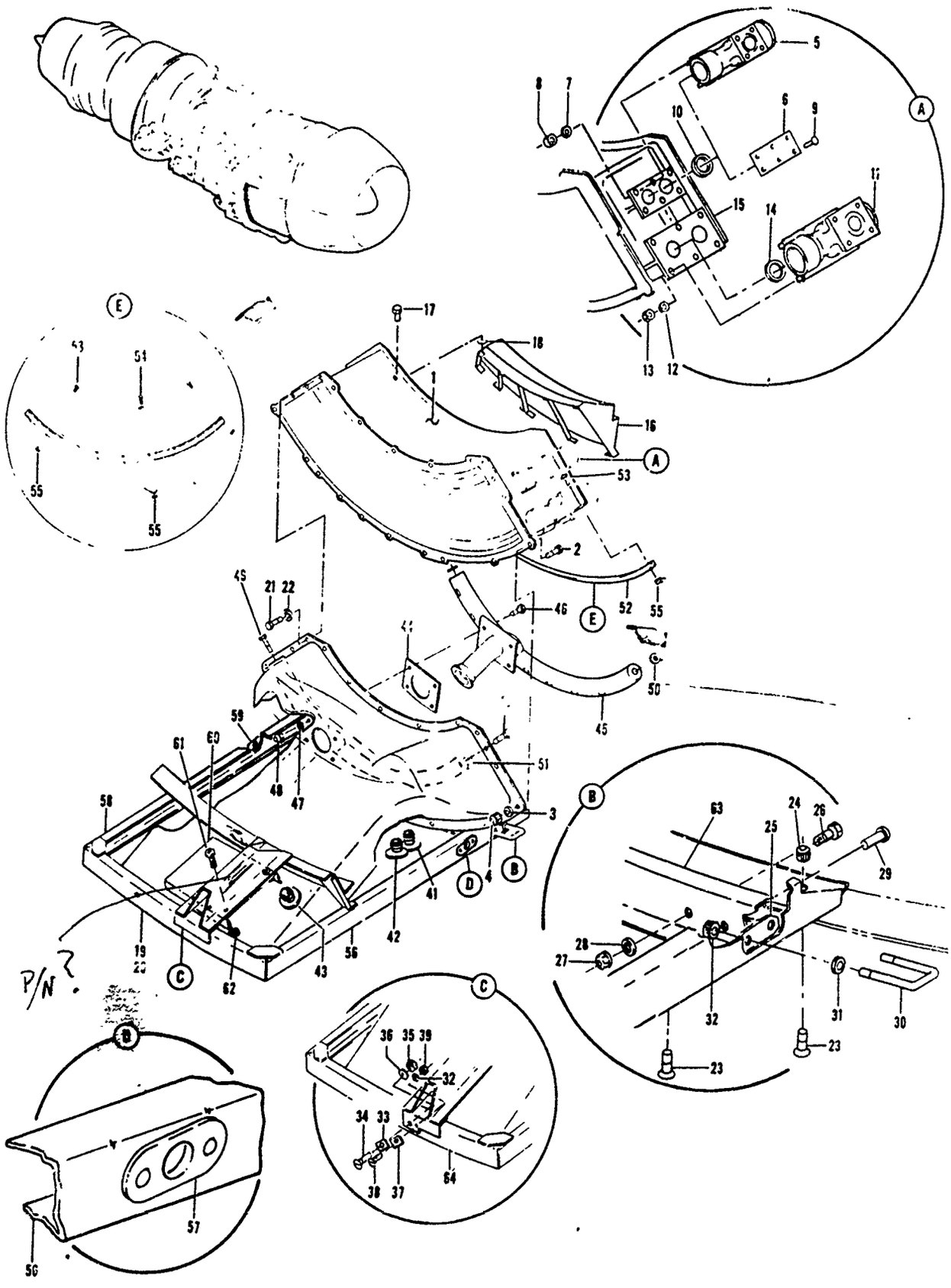


Figure 4-22. Engine and Generator Drive Oil Cooler Installation

| FIGURE & INDEX NO. | PART NUMBER | 1 2 3 4 5 6 7 DESCRIPTION | UNITS PER ASSY | USE ON CODE |
|---|---|---|---|---|
| 4-22 | | | | |
| | 5-88456 | COOLER INSTL, Engine and generator drive oil. . . . . (see figure 4-2, index 8) | Ref | |
| -1 | 998A1 | . COOLER ASSY, Engine and generator drive oil . . . . . (57733) (Boeing Specification 10-2571-8) (optional 65-13008) (for T.O. covering parts brakdown see introduction to Section IV.) | 1 | |
| | | (ATTACHING PARTS) | | |
| -2 | NAS1303-4 | . BOLT (Replaces AN3-5A) (for replacement, order. . . . . BACB30NF3D4) | 15 | |
| -3 | AN960D10 | . WASHER. . . . . | 11 | |
| -4 | MS21042L3 | . NUT, Self-locking 500°F (replaces NAS679A3W) (for . . . replacement, order BACN10JC3) | 15 | |
| | | ---------*--------- | | |
| C -5 | G712504 | . . VALVE ASSY., Generator drive oil bypass and relief. . (57733) (Boeing Specification 10-2571-4) | 1 | C |
| -6 | No Number | . . COVER PLATE (Fabricate from 0.125 to 0.250. . . . . inch thick aluminum, 2.820 x 1.916, drill 6 each holes 0.193 inch diameter to match core) | 1 | D |
| | | (ATTACHING PARTS) | | |
| -7 | AN960D10 | . . WASHER. . . . . | 6 | |
| -8 | MS21042L3 | . . NUT, Self-locking 500°F (replaces NAS679A3W). . . . . (for replacement, order BACN10JC3) | 6 | |
| -9 | NAS1303-4 | . . BOLT (Replaces AN3-5A). . . . . | 6 | D |
| | | ---------*--------- | | |
| -10 | MS29561-211 | . . GASKET, O-ring (BACG10T16) (optional PRP 1847-211 . . (25184), SRC-CZ1415-16 (95272), 47-071-2-211 (83259)) | 2 | |
| C -11 | G712503 | . . VALVE ASSY., Engine oil bypass and relief . . . . . (57733) (Boeing Specification 10-2571-3) | 1 | |
| | | (ATTACHING PARTS) | | |
| -12 | AN960PD416 | . . WASHER. . . . . | 6 | |
| C -13 | MS21042L4 | . . NUT, Self-locking 500°F (replaces NAS679A4W). . . . . (for replacement, order BACN10JC4) | 6 | |
| | | ---------*--------- | | |
| -14 | MS29561-217 | . . GASKET, O-ring (BACG10T22) (optional PRP 1847-217 . . (25184), SRC-CZ1415-22 (95272), 47-071-2-217 (83259)) | 2 | |
| C -15 | G715802 | . . CORE ASSY, Oil cooler (57733) (Boeing . . . . . Specification 10-2571-9) (optional G712502 (57733) (Boeing Specification 10-2571-2) with holes drilled for hail shield attachment) | 1 | |
| B -16 | G715800 | . . SHIELD, Hail (57733) (Boeing Specification. . . . . 10-2571-10) | 1 | |
| | | (ATTACHING PARTS) | | |
| -17 | MS9316-04 | . . SCREW (96906) (optional NAS603-13 or NAS603-13P). . . | 5 | |
| -18 | AN960D10 | . . WASHER. . . . . | AR | |
| | | ---------*--------- | | |
| -19 | 50-2458-35 | . TAB ASSY., Oil cooler exit duct (optional 50-2458). . . | 1 | A |
| -20 | 50-2458-41 | . TAB ASSY., Oil cooler exit duct (optional 50-2458-37) . (ATTACHING PARTS) | 1 | B |
| -21 | NAS1303-8 | . BOLT (For replacement, order BACB30NE3-8) . . . . . | 6 | |
| -22 | AN960PD10L | . WASHER. . . . . | 6 | |
| -23 | NAS517-4-2 | . SCREW, (Optional MS24694S99 when nose cowl doubler. . . is installed) | 6 | |
| -24 | MS21042L4 | . NUT, Self-locking 500°F (replaces NAS679A4W) (for . . . replacement, order BACN10JC4) | 2 | |
| | | ---------*--------- | | |
| -25 | 69C25396-1 | . . FITTING, U-bolt . . . . . | 2 | |
| -26 | NAS1103-3 | . . BOLT. . . . . | 3 | |
| -27 | MS21042-3 | . . NUT, Self-locking . . . . . | 3 | |
| -28 | AN960PD10 | . . WASHER. . . . . | 3 | |
| -29 | MS2047AD6-8 | . . RIVET . . . . . | 1 | |
| -30 | 9-66304-1 | . . U-BOLT. . . . . | 2 | |
| | | (ATTACHING PARTS) | | |
| -31 | AN316-5R | . . NUT . . . . . | 4 | |
| -32 | H23-5 | . . NUT (15653) (BACN10B-L5L) (optional FN22A-524 . . . . (03680), LH3393-054 (72962) VN406-A-054 (92215)) | 4 | |
| | | ---------*--------- | | |

| FIGURE & INDEX NO. | PART NUMBER | DESCRIPTION 1 2 3 4 5 6 7 | A | |
|---|---|---|---|---|
| 4-22(Cont) | | | | |
| -33 | 50-2458-804 | . . BLOCK, Bearing. . . . . | 1 | |
| | | (ATTACHING PARTS) | | |
| -34 | NAS334CPA6 | . . BOLT. . . . . | 1 | |
| -35 | MS21042L4 | . . NUT, Self-locking 500°F (replaces NAS679A4W). . . . . (optional BACN10JC4) | 1 | |
| -36 | AN960D416L | . . WASHER. . . . . | 1 | |
| -37 | 50-2458-805 | . . STOP. . . . . | 1 | |
| | | (ATTACHING PARTS) | | |
| -38 | NAS514P1032-8 | . . SCREW . . . . . | 1 | |
| -39 | MS21042L3 | . . NUT, Self-locking 500°F (replaces NAS679A3W). . . . . (optional BACN10JC3) | 1 | |
| -40 | AN960C10L | . . WASHER. . . . . | 1 | |
| -41 | BACF22H6-3 | . . FLANGE, Flared tube (used on 50-2458-[illegible]). . . | 1 | |
| -42 | BACF22H8-3 | . . FLANGE, Flared tube . . . . . | 1 | |
| -43 | BACF22J6D | . . FLANGE, Straight thread . . . . . | 1 | |
| | 50-6379-21 | . . DUCT ASSY, Oil cooler exit (used on 50-2458-[illegible]) . . | 1 | |
| | 50-6379 | . . DUCT ASSY, Oil cooler exit (used on 50-2458, . . . . 50-2458-35, 50-2458-37) | 1 | |
| -44 | 60-5730 | . . . GASKET. . . . . | 1 | |
| -45 | 90-6937-4 | . . . TUBE ASSY, Air ejector. . . . . | 1 | |
| | | (ATTACHING PARTS) | | |
| -46 | NAS1304-3 | . . . BOLT (Replaces AN4-5A) (optional BACB30NE4-3) . . . | 4 | |
| -47 | AN960D416L | . . . WASHER. . . . . | 4 | |
| -48 | MS21042L4 | . . NUT, Self-locking 500°F (replaces NAS679A4W). . . . . (optional BACN10JC4) | 4 | |
| -49 | NAS1304-9H | . . . BOLT (Replaces AN4H10A) (for replacement order. . . BACB30NE4H9) | 2 | |
| -50 | AN960-416 | . . . WASHER. . . . . | 2 | |
| -51 | 60-5732 | . . . SPACER, Ejector tube. . . . . | 2 | |
| -52 | 90-7940 | . DEPRESSOR, Seal (for replacement order 90-7940-1) . . . | 1 | |
| | | (ATTACHING PARTS) | | |
| -53 | MS9316-04 | . SCREW (Optional NAS603-6) . . . . . | 3 | |
| -54 | MS9316-06 | . SCREW (Optional NAS603-10). . . . . | 6 | |
| -55 | MS21042L3 | . NUT, Self-locking 500°F (replaces NAS679A3W). . . . . (optional BACN10JC3) | AR | |
| -56 | 50-2458-27 | . LONGERON RH . . . . . | 1 | E |
| -57 | 3-74650 | . . STRIKER PLATE . . . . . | 1 | |
| -58 | 50-2458-28 | . LONGERON LH . . . . . | 1 | E |
| -59 | 3-74650 | . . STRIKER PLATE . . . . . | 1 | |
| -60 | (a) 36-7367-1 | . SUPPORT . . . . . | 1 | |
| | | (ATTACHING PARTS) | | |
| -61 | (a) NAS603-8P | . SCREW . . . . . | 4 | |
| -62 | (a) MS21042L3 | . NUT . . . . . | 2 | |
| -63 | 50-2458-3 | . LATCH SUPPORT . . . . . | 1 | |
| -64 | 50-2458-10 | . FRAME . . . . . | 1 | |

A Use with 50-4678
B Use with 50-4678-36
C Used on 5-96388 oil system
D Used on 5-96388-1 oil system
E Used on 50-2458-35, -37, and -41 tab assy

(a) Added by T.O. 1C-135-920

# FLOW PROCESS CHART

SUBJECT Oil Cooler Tab Assy DATE 4/4/89

PCN: 15178A WCD: 15178A WCDDATE: 88054

CHART BEGINS Operation 010

CHART ENDS Operation 260 PREPARED BY: Tim Hall

| | SYMBOLS | DESCRIPTION |
|---|---|---|
| 10 | ● ◇ D □ ▽ | RECEIVE / UNCRATE 2122 MBPCD |
| | ○ ◇ ◗ □ ▽ | DELAY |
| | ○ ◗ D □ ▽ | MOVE |
| | ○ ◇ ◗ □ ▽ | DELAY |
| 12 | ● ◇ D □ ▽ | CLEAN OIL COOLER TAB 2122 MBPCA |
| 15 | ● ◇ D □ ▽ | STRIP PAINT 2122 MBPCA |
| 18 | ● ◇ D □ ▽ | ABRASIVE BLAST 2122 MBPCA |
| | ○ ◇ ◗ □ ▽ | DELAY |
| | ○ ◗ D □ ▽ | MOVE To 95 |
| | ○ ◇ ◗ □ ▽ | DELAY |
| 22 | ● ◇ D □ ▽ | ACCOMPLISH SHAKEDOWN INSPECTION 95 MBPAB |
| | ○ ◇ ◗ □ ▽ | DELAY |
| | ○ ◗ D □ ▽ | MOVE To 3001 |
| | ○ ◇ ◗ □ ▽ | DELAY |
| 26 | ● ◇ D □ ▽ | WELD 3001 MTPIW |
| | ○ ◇ ◗ □ ▽ | DELAY |
| | ○ ◗ D □ ▽ | MOVE To 95 |
| | ○ ◇ ◗ □ ▽ | DELAY |
| 30 | ● ◇ D □ ▽ | REPAIR / TREAT CORROSION 95 MBPAB |
| 040 | ● ◇ D □ ▽ | REPLACE FASTENERS |
| [illegible] | ● ◇ D □ ▽ | Replace 'U' bolt Bracket |
| [illegible] | ● ◇ D □ ▽ | Delete one bolt nearest 'U' bolt & substitute with rivet |
| 070 | ● ◇ D □ ▽ | Replace stop as needed |
| 080 | ● ◇ D □ ▽ | Replace rib |
| 090 | ● ◇ D □ ▽ | Replace R.H. longeron |
| 100 | ● ◇ D □ ▽ | Replace L.H. longeron |
| 110 | ● ◇ D □ ▽ | Replace Latch Support |
| 120 | ● ◇ D □ ▽ | Replace 'U' bolt |
| 130 | ● ◇ D □ ▽ | Replace Lap strip |

| | SYMBOLS | DESCRIPTION |
|---|---|---|
| 140 | ● ◇ D □ ▽ | Replace Frame 95 MABPAB |
| 150 | ● ◇ D □ ▽ | Replace Hot Set Brackets |
| 160 | ● ◇ D □ ▽ | Replace support Brackets |
| 170 | ● ◇ D □ ▽ | Replace support Frame |
| 180 | ● ◇ D □ ▽ | Replace air ejector Tube assy & gasket |
| 190 | ● ◇ D □ ▽ | Replace cover plate (Skin) |
| 200 | ● ◇ D □ ▽ | Replace bearing block |
| 210 | ● ◇ D □ ▽ | Replace striking plates |
| 220 | ● ◇ D □ ▽ | Replace Flange Flared Tube (Large) |
| 230 | ● ◇ D □ ▽ | Replace Flange Flared Tube (Small) |
| | ○ ◇ ◗ □ ▽ | Delay |
| | ○ ◗ D □ ▽ | Move To Bldg 2280 2280 MABPC |
| | ○ ◇ ◗ □ ▽ | Delay |
| 240 | ● ◇ D □ ▽ | Prime interior surfaces |
| | ○ ◇ ◗ □ ▽ | Delay |
| | ○ ◗ D □ ▽ | Move To Bldg 95 95 MBPCA |
| | ○ ◇ ◗ □ ▽ | Delay |
| | ● ◇ D □ ▽ | Condition Tag |
| | ○ ◇ D □ ▽ | |
| | ○ ◇ D □ ▽ | |
| | ○ ◇ D □ ▽ | |
| | ○ ◇ D □ ▽ | |
| | ○ ◇ D □ ▽ | |
| | ○ ◇ D □ ▽ | |
| | ○ ◇ D □ ▽ | |
| | ○ ◇ D □ ▽ | |
| | ○ ◇ D □ ▽ | |
| | ○ ◇ D □ ▽ | |
| | ○ ◇ D □ ▽ | |

| 15170A * WORK CONTROL DOCUMENT * MSTR 1.DATE 88054 PAGE 1 OF 3 PAGES |
|---|

| 2.ORIG/PROD NR | 3.QUANTITY | 4.PROD SECTION/RCC | 5.DATE SCHLD | 6.DATE COMP |
|---|---|---|---|---|
| 15178A | | MABPAB | 89093 | |

| 7.PART NUMBER | 9.ITEM SERIAL NR | 8/12.TECH DATA/OPTIONAL |
|---|---|---|
| 50 2458-41 | | SOW OC1560FL/83-158 |
| | | 16 MAR 84 |

| 10.MODEL/DESIGN/SERIES | 11.STOCK NR |
|---|---|
| C-135 | 1560006513615FL |

| 13.MISC | 14.NOUN/END ITEM NOUN |
|---|---|
| | OIL COOLER TAB ASSY |
| | L. MULLINAX/MABEBS/65266 |

| 15.DISP | 16.PDN/OP NO. | 17.WORK TO BE ACCOMPLISHED | 18.WC | 19"P" | 20"Q" |
|---|---|---|---|---|---|
| 2122 | 010 MBPCD | RECIEVE & UNCRATE | / | / | / |
| 2122 | 012 MBPCA | CLEAN OIL COOLER TAB IAW T.O.1 1 1 | | / | / |
| 2122 | 015 MBPCA | STRIP AND REMOVE ALL PAINT IAW T.O. 1C-135(K)A-3-4, SEC XI. MOVE TO BLDG 75 | | / | / |
| 2122 | 018 MBPCA | ABRASIVE BLAST OIL COOLER TAB IAW T.O. 1C 135(K)A 3 4, SEC IV AND T.O. 1 1-2. | | / | / |
| 95 | 022 MBPAB | ACCOMPLISH SHAKEDOWN INSPECTION IAW SOW OC/1560FL/83-158. | | / | / |
| 3001 | 026 MTP1W | WELD AS NECESSARY USING OIL COOLER SUPPORT FITTING LOCATOR JIG, P/N 7026872. REQD NOT REQD-- | | / | / |
| 95 | 030 MBPAB | REMOVE/TREAT CORROSION IAW 1C-135(K) A-3-4 REQD------ NOT REQD | | / | / |
| 95 | 040 MBPAB | REPLACE CORRODED, LOOSE, WORN OR DAMAGED FASTENERS OR MOUNTING HRDWRE REQD------ NOT REQD | | / | / |
| 95 | 050 MBPAB | REPLACE "U" BOLT BRACK P/N60-3505 -1AND-2 WITH BRACKET P/N 68C25398-1 REQD------ NOT REQD | | / | / |
| 95 | 060 MBPAB | DELETE ONE BOLT NEAREST "U" BOLT AND SUBSTITUTE WITH RIVLT P/N MS20470AD6 7 REQD------ NOT REQD | | / | / |
| 95 | 070 MBPAB | REPLACE AS NEEDED/STOP P/N 50-2458-804 REQ'D_____NOT REQ'D_____ | | / | / |
| 95 | 080 MBPAB | REPLACE RIB P/N 50-2458-2 REQD------NOT REQD | | / | / |

(CONTINUED)

| 15170A * WORK CONTROL DOCUMENT * MISTR 1.DATE 88054 | PAGE 2 OF 3 PAGES |
|---|---|

| 15.DISP STATION | 16.PDN/ UP NO. | 17.WORK TO BE ACCOMPLISHED | 18.MECH | 19"P" | 20"Q" |
|---|---|---|---|---|---|
| 95 | 090 MBPAB | REPLACE LONGERON R.H. P/N 50-2453-28 IAW SOW, PARA 4<br><br>REQ'D_____NOT REQ'D_____ | | E | / |
| 95 | 100 MBPAB | REPLACE LONGERON L.H. P/N 50-2450 27 IAW SOW, PARA 4<br><br>REQ'D_____NOT REQ'D_____ | | E | / |
| 95 | 110 MBPAB | REPLACE LATCH SUPPORT P/N 50 2450 3<br><br>REQ'D_____NOT REQ'D_____ | | / | / |
| 95 | 120 MBPAB | REPLACE "U" BOLT P/N 9-66304-1 (2EA)<br><br>REQ'D_____NOT REQ'D_____ | | / | / |
| 95 | 130 MBPAB | REPLACE LAP STRIP P/N 50-2458-29<br><br>REQ'D_____NOT REQ'D_____ | | / | / |
| 95 | 140 MBPAB | REPLACE FRAME P/N 50-2458-10<br><br>REQ'D_____NOT REQ'D_____ | | E | / |
| 95 | 150 MBPAB | REPLACE HOT SCT BRCKT P/N69-1147-1<br><br>REQ'D_____NOT REQ'D_____ | | / | / |
| 95 | 160 MBPAB | REPLACE SUPPORT BRCKT P/N66-1140-801<br><br>REQ'D_____NOT REQ'D_____ | | / | / |
| 95 | 170 MBPAB | REPLACE SUPPORT FRAME P/N 50-2458-33<br><br>REQ'D_____NOT REQ'D_____ | | / | / |
| 95 | 180 MBPAB | REPLACE AIR EJECTOR TUBE ASSY P/N 90-6937-4 & GASKET P/N 60-5730<br>REQD------NOT REQD----- | | E | / |
| 95 | 190 MBPAB | RPLC CVR PLATE (SKIN) P/N50-2458-1<br><br>REQ'D_____NOT REQ'D_____ | | / | / |
| 95 | 200 MBPAB | REPLACE BEARING BLOCK P/N 50-2458-804<br><br>REQ'D_____NOT REQ'D_____ | | / | / |
| 95 | 210 MBPAB | REPLACE STRIKE PLATES (2EA) P/N 3-74650<br><br>REQ'D_____NOT REQ'D_____ | | / | / |

15178A * WORK CONTROL DOCUMENT [illegible] 1.DATE 00054 PAGE 3 OF 3 PAGES

| 15.DISP-16.PDN/ STATION | OP NO. | 17.WORK TO BE ACCOMPLISHED | 18.MECH | 19"P" | 20"Q" |
|---|---|---|---|---|---|
| 95 | 220 MBPAB | REPLACE FLANGE FLARED TUBE (LARGE) P/N BACF22H8-3<br><br>REQ'D_____NOT REQ'D_____ | | / | / |
| 95 | 230 MBPAB | REPLACE FLANGE FLARED TUBE (SMALL) P/N BACF22H6-3<br><br>REQ'D_____NOT REQ'D_____<br>MOVE TO BLDG 2280 MBPCB | | / | / |
| 2280 | 240 MBPCB | INTERIOR SURFACES FINISHED WITH TWO COATS OF EPOXY PRIMER MIL P-23377<br>MOVE TO BLDG 95 MBPAB | | / | / |
| 95 | 250 MBPAB | CONDITION TAG AND DECAL, RETURN TO SUPPLY SERVICEABLE. | / | E | / |
| 95 | 260 MBPAB | CONDITION TAGGED IAW AFM 67-1.<br>NOTE: COMPLETE "REMARKS" COLUMN OF AFLC FORM 1574 IAW MAOI 66-36<br>NOTE: PART WILL HAVE OC-ALC FORM 586 587 OR 588 ID LABEL APPLIED TO COMPLETED END ITEM IAW AFLCR 66-51 WITH ACCEPTANCE DATE ON LABEL ALONG WITH "M" STAMP OF THE PERSON PERFORMING THE OVERHAUL. CAUTION: SURFACES TO WHICH LABELS ARE APPLIED MUST BE FREE OF CONTAMINATION. | / | E | / |

COORDINATION: DATE:

| | | |
|---|---|---|
| MABEBS | LARRY MULLINAX | 3-28-89 |
| MAQBF | TED HAYES | 3-28-89 |
| MABSCS | CONNIE WEBBER | 3-28-89 |
| MABPAB | JESSIE JACOBS | 3-28-89 |

15236A

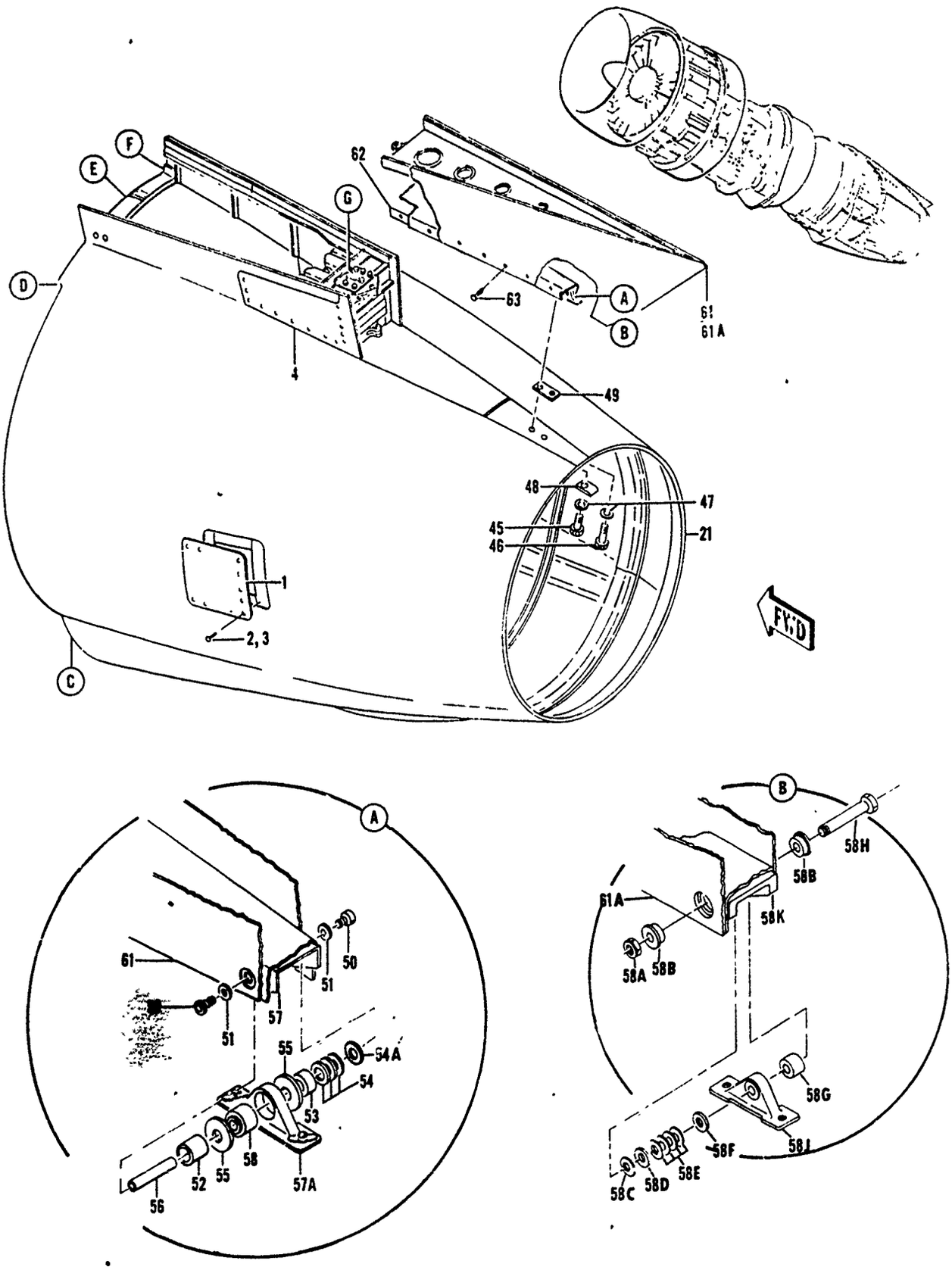


Figure 4-19. Aft Thrust Reverser and Sleeve Assembly (Sheet 1 of 3)

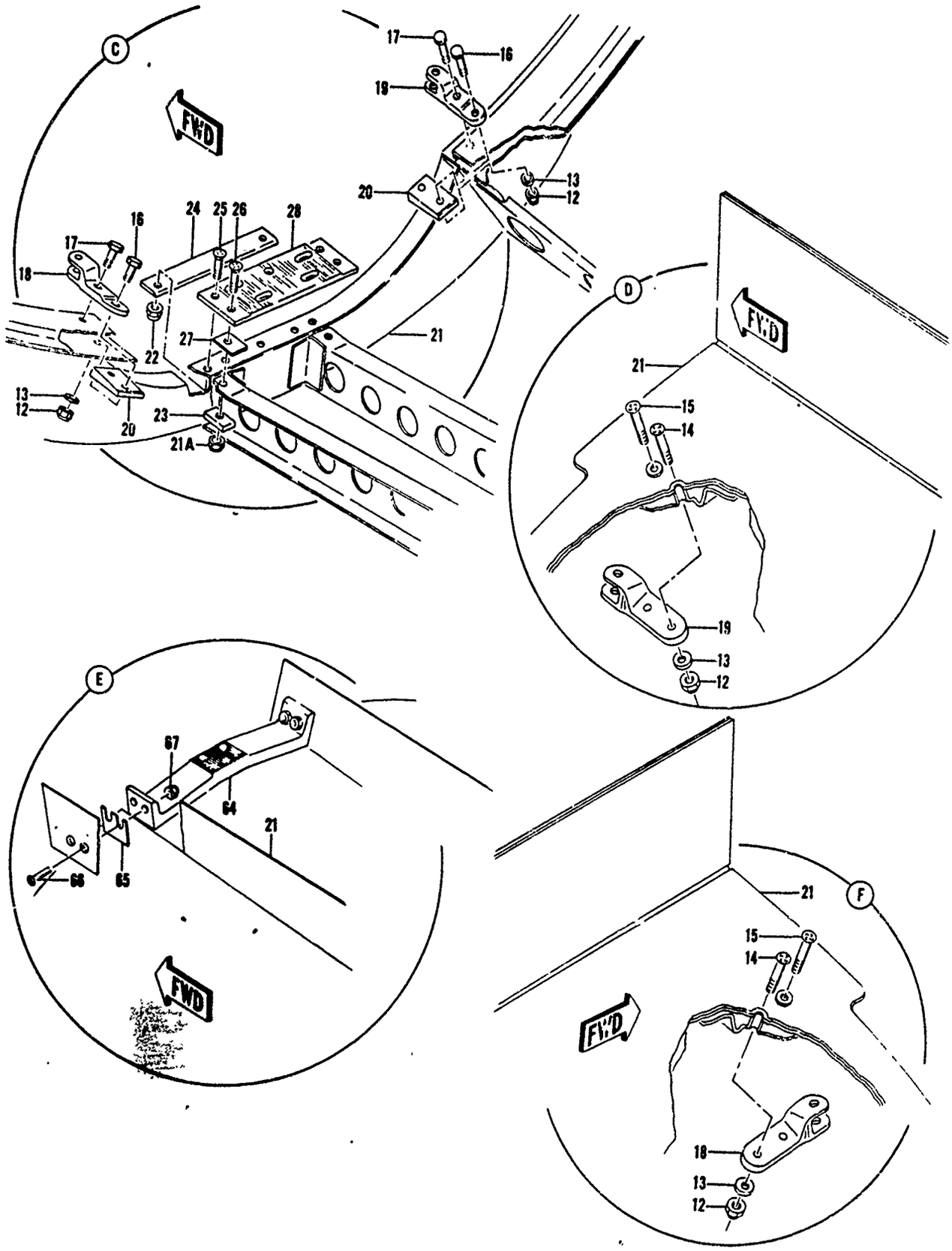


Figure 4-19. Aft Thrust Reverser and Sleeve Assembly (Sheet 2 of 3)

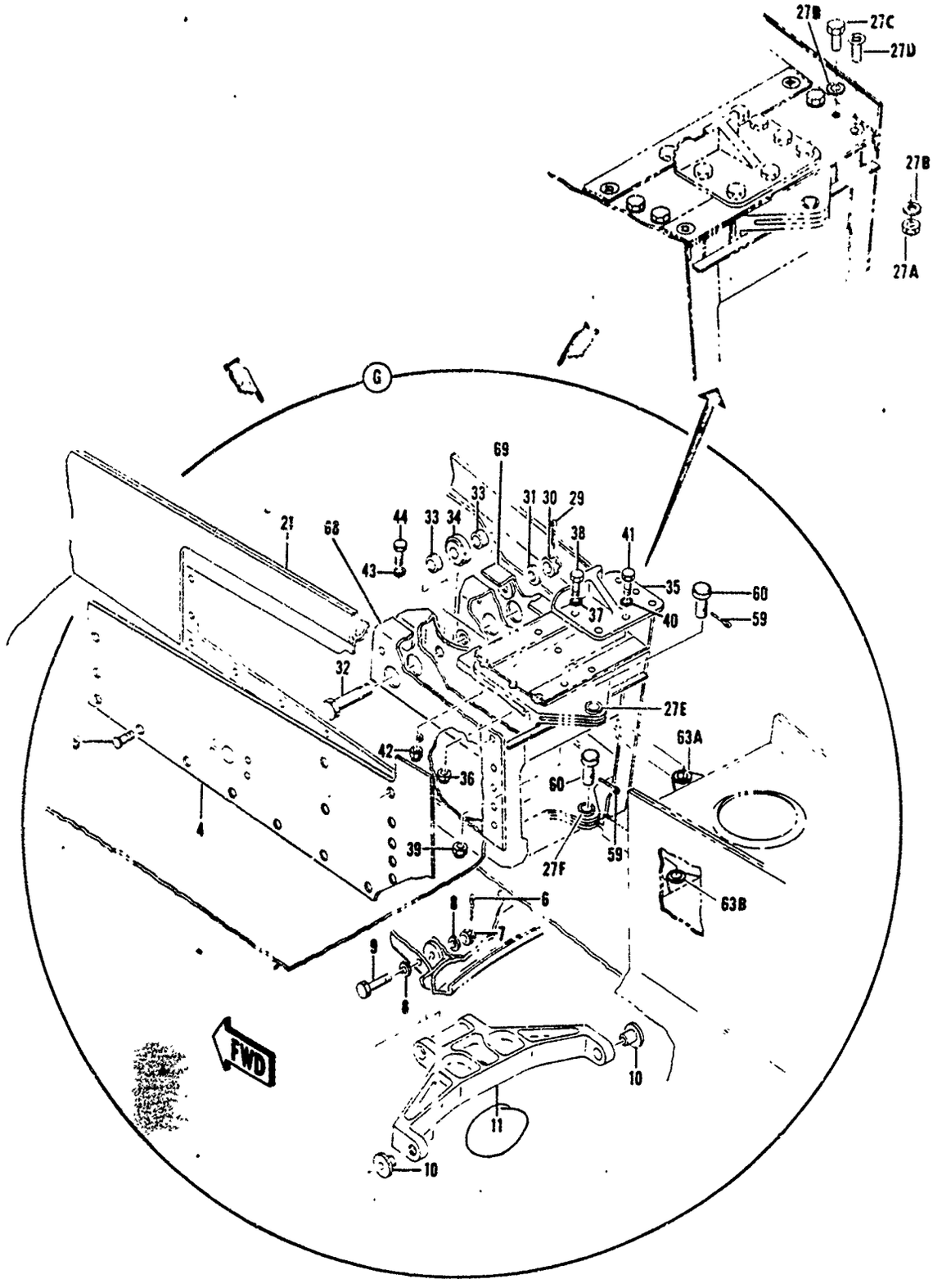


Figure 4-19. Aft Thrust Reverser and Sleeve Assembly (Sheet 3 of 3)

| FIGURE & INDEX NO. | PART NUMBER | 1 2 3 4 5 6 7 DESCRIPTION | UNITS PER ASSY | USABLE ON CODE |
|---|---|---|---|---|
| 4-19 | 65-10505-402 | SLEEVE ASSY, Aft thrust reverser (optional 65-10505-401, 65-10505-353 and 65-10505-269; 65-10505-402 preferred for replacement) (see figure 4-18, index 43) | Ref | |
| -1 | 65-10505-11 | . ACCESS PANEL ASSY, Bottom and sides (ATTACHING PARTS) | 3 | |
| -2 | NAS517-3-3 | . SCREW (Used on side access panels) | 32 | |
| -3 | NAS517-3-2 | . SCREW (Used on bottom access panels) | 16 | |
| -4 | 65-10505-360 | . PANEL ASSY, Access (optional 65-10505-268, 65-10505-360 preferred for replacement) | 1 | |
| | 65-10505-361 | . PANEL ASSY, Access (opposite 65-10505-360) (optional 65-10505-251, 65-10505-361 preferred for replacement) (ATTACHING PARTS) | 1 | |
| -5 | NAS517-3-2 | . SCREW | 32 | |
| -6 | AN381-2-8 | . PIN, Cotter | 8 | |
| -7 | AN320C4 | . NUT | 8 | |
| -8 | AN960C416 | . WASHER | 16 | |
| -9 | BAC-B30BH-4-12 | . BOLT | 8 | |
| | 65-10526 | . LINK ASSY, Support | 4 | |
| -10 | 66-10244 | . . BUSHING | 2 | |
| -11 | 65-10526-1 | . . LINK | 1 | |
| -12 | NAS679C3W | . NUT | 8 | |
| -13 | AN960C10 | . WASHER | 8 | |
| -14 | NAS517-3-13 | . SCREW | 2 | |
| -15 | NAS517-3-15 | . SCREW | 2 | |
| -16 | BAC-B30BG-3-13A | . BOLT | 2 | |
| -17 | BAC-B30BG-3-15A | . BOLT | 2 | |
| -18 | 65-10527-1 | . FITTING, Left lower, right upper | 2 | |
| -19 | 65-10527-2 | . FITTING, Right lower, left upper | 2 | |
| -20 | 66-10240-2 | . FILLER, Lower fitting | 2 | |
| -21 | 65-10505-403 | . SLEEVE ASSY (Preferred replacement for 65-10505-400 and 65-10505-270) | 1 | E |
| -21 | 65-10505-400 | . SLEEVE ASSY (Optional 65-10505-403 and 65-10505-270; 65-10505-403 preferred for replacement) | 1 | C |
| -21 | 65-10505-270 | . SLEEVE ASSY (Optional 65-10505-400 and 65-10505-403, 65-10505-403 preferred for replacement) | 1 | D |
| -21A | MS2C500-428 | . . NUT | 2 | |
| -22 | MS20500-1032 | . . NUT | 2 | |
| -23 | 66-10240 | . . FILLER, Radius | 2 | |
| -24 | 66-10240-1 | . . FILLER, Radius | 1 | |
| -25 | BAC-B30BF-3-C7 | . . BOLT | 2 | |
| -26 | NAS560HK4-10 | . . BOLT | 2 | |
| -27 | BAC-S40SD-13-17 | . . SHIM, Laminated (make from BAC1524-62SS) | 2 | |
| -27A | NAS679A3W | . . NUT | 8 | |
| -27B | AN960C10L | . . WASHER | 8 | |
| -27C | AN3C4A | . . BOLT | 4 | |
| -27D | BACB30LH3U3 | . . BOLT (Optional BACB30BF3C3 or BACB30BF3-3) | 4 | |
| | 69-12671 | . . FITTING ASSY, Hinge trailing edge fairing | 1 | |
| | 69-12671-1 | . . . FITTING, Hinge | 1 | |
| -27E | NAS77A5-13P | . . . BUSHING, Flanged | 2 | |
| | 65-15604 | . . FITTING ASSY, Hinge, aft thrust reverser | 1 | |
| | 65-15604-1 | . . . FITTING, Hinge | 1 | |
| -27F | NAS77A5-13P | . . . BUSHING, Flanged | 2 | |
| -28 | 66-10242 | . FITTING, Lower serrated | 1 | |
| -29 | AN381-3-14 | . PIN, Cotter | 1 | |
| -30 | AN320C6 | . NUT | 1 | |
| -31 | AN960C616 | . WASHER | 1 | |
| -32 | BAC-B30BH-6-22 | . BOLT | 1 | |
| -33 | 1057T6-028 | . SPACER | 2 | |
| -34 | 2063 | . BEARING, Needle (60380) (BAC-B10B-317) | 1 | |
| -35 | 69-10330-6 | . STOP (Optional 69-10330-4) (ATTACHING PARTS) | 1 | |
| -36 | NAS679A3W | . NUT | 5 | |
| -37 | AN960C10L | . WASHER | 5 | |
| -38 | NAS501-3-6A | . BOLT | 5 | |

| FIGURE & INDEX NO | PART NUMBER | DESCRIPTION 1 2 3 4 5 6 7 | NOT PER ASSY | USABLE CODE |
|---|---|---|---|---|
| 4-19(Cont) | | | | |
| -39 | NAAS679C3W | . NUT | 1 | |
| -40 | AN960C10 | . WASHER. | 1 | |
| -41 | AN3C5A | . BOLT. | 1 | |
| | | ---------*--------- | | |
| -42 | NAS679A3W | . NUT | 2 | |
| -43 | AN960C10L | . WASHER. | 2 | |
| -44 | BAC-B30BF-3-6A | . BOLT. | 2 | |
| -45 | AN4C6A | . BOLT. | 1 | |
| -46 | AN4C5A | . BOLT. | 1 | |
| -47 | AN960C416 | . WASHER. | 2 | |
| -48 | 65-10505-824 | . FILLER, Radius (make from AISI301 sheet per MIL-S-5059. comp 30, ser. cond. 2D 1/2 hard, 0.20 x 3.3 x 3.4 inches) | 1 | |
| -49 | 65-10505-209 | . SHIM, Laminated | 1 | |
| -50 | MS16996-10 | . SCREW (Optional BACS12AG8F and MS16996-10B) | 2 | A |
| -51 | AN960-10L | . WASHER. | 2 | A |
| -52 | NAS42HT10-28 | . SPACER. | 1 | A |
| -53 | NAS42HT10-14 | . SPACER. | 1 | A |
| -54 | AN960-516 | . WASHER. | 3 | A |
| -54A | AN960-516L | . WASHER. | 1 | A |
| -55 | MS15795-811 | . WASHER (Optional BACW10P115S) | 2 | A |
| -56 | 66-11683 | . PIN | 1 | A |
| -57 | 69-12687-2 | . SUPPORTING FITTING. | 1 | A |
| | 69-12689 | . FITTING ASSY, Anchor, fairing | 1 | A |
| -57A | 69-12687-1 | . . FITTING, Anchor | 1 | A |
| -58 | BSSR-5000-G | . . BEARING (81376) (BACB10A203GD) (Optional KWB-5SSG (07613)) | 1 | A |
| -58A | NAS509-5 | . NUT | 1 | B |
| -58B | 66-20473-1 | . BUSHING, Flanged. | 2 | B |
| -58C | 66-21131-1 | . SHIM, Laminated | 1 | B |
| -58D | AN960-516 | . WASHER. | 1 | B |
| -58E | AN960-516L | . WASHER. | 4 | B |
| -58F | NAS42HT10-10 | . SPACER. | 1 | B |
| -58G | NAS42HT10-22 | . SPACER (Make from NAS42HT10-28) | 1 | B |
| -58H | BACB30GN5-25 | . BOLT. | 1 | B |
| -58J | 69-30242-1 | . FITTING, Anchor (optional 69-12689-2) | 1 | B |
| -58K | 69-20531-1 | . SUPPORT FITTING | 1 | B |
| -59 | AN380-3-3 | . PIN, Cotter | 2 | |
| -60 | MS20392-4C21 | . PIN, Flathead (optional MS20392-4-21) | 2 | |
| -61 | 65-10505-271 | . FAIRING ASSY, Aft | 1 | A |
| -61A | 65-10505-354 | . FAIRING ASSY, Aft | 1 | B |
| -62 | 69-12695-1 | . . SEAL ASSY, Fairing. | 1 | |
| | 69-12695-2 | . . SEAL ASSY (Opposite 69-12695-1) (ATTACHING PARTS) | 1 | |
| -63 | NAS517-3-2 | . . SCREW (Optional BACB30LU3-2). | 14 | |
| | | ---------*--------- | | |
| | 65-15593 | . . FITTING ASSY, Hinge, aft fairing. | 1 | |
| | 65-15593-1 | . . . FITTING, Hinge. | 1 | |
| -63A | NAS76A5-004P | . . . BUSHING, Plain. | 1 | |
| | 69-12679 | . . FITTING ASSY, Hinge, aft fairing. | 1 | |
| | 69-12679-1 | . . . FITTING, Hinge. | 1 | |
| -63B | NAS76A5-004P | . . . BUSHING, Plain. | 1 | |
| -64 | 65-16771-1 | . FITTING, Support. | 1 | |
| -65 | BACS40SC22-27 | . SHIM (Make from BAC1524-14SS) | AR | |
| -66 | NAS1221-4-15 | . BOLT. | 4 | |
| -67 | MS20500-428 | . NUT | 4 | |
| -68 | 69-10333-1 | . CHANNEL ASSY. | 1 | |
| -69 | 69-10333-2 | . CHANNEL ASSY. | 1 | |
| | *65-98055-2 | KIT ASSY, Aft fairing attach fitting replacement. | 1 | |
| | 65-99332-2 | KIT ASSY, Sleeve structure modification | 1 | |
| | | A Used On 65-10505-269 | | |
| | | B Used On 65-10505-353, -401 and -402 | | |
| | | C Used On 65-10505-401 | | |
| | | D Used On 65-10505-269 and -353 | | |
| | | E Used On 65-10505-402 | | |
| | | *See detailed illustration 8. Kit consists of items 58A thru 58K. | | |

# FLOW PROCESS CHART

SUBJECT SLEEVE ASSEMBLY DATE 4/5/89

PCN: 15236A WCD: 15236A WCDDATE: 88054

CHART BEGINS Operation 010

CHART ENDS Operation 350 PREPARED BY: MICHAEL

| | SYMBOLS | DESCRIPTION |
|---|---|---|
| 010 | ● ○ ○ □ ▽ | RECEIVE & UNPACK 2122 MBPCD |
| | ○ ○ ● □ ▽ | DELAY |
| | ○ ● ○ □ ▽ | MOVE |
| | ○ ○ ● □ ▽ | DELAY |
| 020 | ● ○ ○ □ ▽ | WASH INT. & FLT. 2122 MBPCA |
| | ○ ○ ○ □ ▽ | |
| | ○ ○ ○ □ ▽ | |
| | ○ ○ ○ □ ▽ | |
| 030 | ● ○ ○ □ ▽ | STRIP INT. & EXT. |
| | ○ ○ ● □ ▽ | Delay |
| | ○ ● ○ □ ▽ | Move To bldg 95 95 MABPAB |
| | ○ ○ ● □ ▽ | |
| 040 | ● ○ ○ □ ▽ | Remove panels |
| 050 | ● ○ ○ □ ▽ | Remove fairing assembly |
| 060 | ● ○ ○ □ ▽ | Remove support Link |
| | ○ ○ ● □ ▽ | Delay |
| | ○ ● ○ □ ▽ | Move To 2122 2122 MABPCA |
| | ○ ○ ● □ ▽ | Delay |
| 070 | ● ○ ○ □ ▽ | Abrasive blast sleeve |
| | ○ ○ ● □ ▽ | Delay |
| | ○ ● ○ □ ▽ | Move To 95 95 MABPAB |
| | ○ ○ ● □ ▽ | Delay |
| 080 | ○ ○ ○ ■ ▽ | Visual Inspection |
| 090 | ● ○ ○ □ ▽ | Treat corrosion |
| 100 | ● ○ ○ □ ▽ | Remove lockwire & cotter pins & replace w/new mat'l |
| 110 | ● ○ ○ □ ▽ | Replace Fasteners, nuts, nut plates & screws |
| 120 | ● ○ ○ □ ▽ | Remove MINOR scratches, nicks & corrosion |
| 130 | ● ○ ○ □ ▽ | Repair defects in Threaded areas |
| 140 | ● ○ ○ □ ▽ | Correct Minor Separation defects |

| | SYMBOLS | DESCRIPTION |
|---|---|---|
| | ○ ○ ● □ ▽ | Delay |
| | ○ ● ○ □ ▽ | Move To 3001 3001 MATPZW |
| | ○ ○ ● □ ▽ | Delay |
| 145 | ● ○ ○ □ ▽ | Weld Hat Rig Section |
| | ○ ○ ● □ ▽ | Delay |
| | ○ ● ○ □ ▽ | Move To 95 95 MABPAB |
| | ○ ○ ● □ ▽ | Delay |
| 150 | ● ○ ○ □ ▽ | Replace unserviceable or damaged parts |
| 155 | ● ○ ○ □ ▽ | Disassemble box |
| | ○ ○ ● □ ▽ | Delay |
| | ○ ○ ○ ■ ▽ | Perform penetrant inspection check |
| | ○ ○ ● □ ▽ | Delay |
| | ● ○ ○ □ ▽ | Reassemble box after inspection |
| 180 | ● ○ ○ □ ▽ | Replace Link Brackets |
| 190 | ● ○ ○ □ ▽ | Replace aft rub strip |
| 200 | ● ○ ○ □ ▽ | Repair or replace skin - 407 |
| 210 | ● ○ ○ □ ▽ | Repair or replace skin - 406 |
| 220 | ● ○ ○ □ ▽ | Repair or replace skin - 405 |
| 230 | ● ○ ○ □ ▽ | Repair or replace skin - 404 |
| 240 | ● ○ ○ □ ▽ | Replace damaged nut plates & screws |
| 250 | ● ○ ○ □ ▽ | Repair or replace Fire seals |
| 260 | ● ○ ○ □ ▽ | Repair or replace Heat shields |
| 270 | ● ○ ○ □ ▽ | replace aluminum parts w/ stainless steel |
| 280 | ● ○ ○ □ ▽ | replace damaged nutplates & screws |
| 290 | ● ○ ○ □ ▽ | Install Fairing assy |
| 300 | ● ○ ○ □ ▽ | Install support link and bushings |
| 310 | ● ○ ○ □ ▽ | Reinstall all parts removed for repairs |
| 320 | ● ○ ○ □ ▽ | attach access panels & hardware |
| | ○ ○ ● □ ▽ | Done |

085 - P/N 65-10526-1 is removed and sent to bldg 3001 for magnetic particle inspection and then returned, tagged good or bad. This part is interchangeable, the sleeve assembly repair process continues independent of this inspection.

# FLOW PROCESS CHART

SUBJECT Sleeve Assembly DATE 4/5/89

PCN: 15236A WCD: 15236A WCDDATE: 88054

CHART BEGINS Operation 010 PAGE OF

CHART ENDS Operation 350 PREPARED BY: Tim Hall

| WCD OP # | SYMBOLS | DESCRIPTION |
|---|---|---|
| | ○ ◆ D □ ▽ | Move to 2122 |
| | ○ ◇ ◆ □ ▽ | 2122 MHBPCB<br>Delay |
| 330 | ● ◇ D □ ▽ | Final Wash and Corrosion Treat |
| 340 | ● ◇ D □ ▽ | Refinish and paint |
| | ○ ◇ ◆ □ ▽ | Delay |
| | ○ ◆ D □ ▽ | Move To Bldg 95 |
| | ○ ◇ ◆ □ ▽ | Delay |
| | ● ◇ D □ ▽ | Condition Tag |
| | ○ ◇ D □ ▽ | |
| | ○ ◇ D □ ▽ | |
| | ○ ◇ D □ ▽ |

15236A * WORK CONTROL DOCUMENT - MISTR 1.DATE 88054 PAGE 1 OF 3 PAGES

| 2.ORIG/PROD NR | 3.QUANTITY | 4.PROD SECTION/RCC | 5.DATE SCHLD | 6.DATE COMP |
|---|---|---|---|---|
| | | MBPAB | 89093 | |

| 7.PART NUMBER | 9.ITEM SERIAL NR | 8/12.TECH DATA/OPTIONAL |
|---|---|---|
| 65-10505-269 | | 1. WORK SPEC. OC 1560FL/ 78-1-45, 27 NOV 78. |
| 10.MODEL/DESIGN/SERIES | 11.STOCK NR | 2. 1C-135B 10, 1C-135(E) |
| RC-135 | 15600080/5321FL | C10, |

| 13.MISC | 14.NOUN/END ITEM NOUN |
|---|---|
| | SLEEVE ASSEMBLY |
| | -L. MOLLINAX/MABLBS/65266 |

| 15.DISP 16.PDN STATION | OP NO. | 17.WORK TO BE ACCOMPLISHED | 18.MECH | 19"P" | 20"Q" |
|---|---|---|---|---|---|
| 2122 | 010 MBPCD | RECEIVE & UNCRATE | | / | |
| 2122 | 020 MBPCA | WASH INTERIOR AND EXTERIOR IAW SOW OC1560FL/78-1-45 AND T.O. 1C-135(K)A-3-4 SEC 11 & T.O. 1C-135B-10 SEC 6-64. | | / | / |
| 2122 | 030 MBPCA | STRIP INTERIOR AND EXTERIOR IAW T.O. 1C-135(K)A-3-4 SEC 9 & 11 AND T.O. 1-1-8. | | | / |
| 95 | 040 MBPAB | REMOVE PANELS (-360), (-361) AND LIT'S. REQD_____ NOT REQD_____ | | / | |
| 95 | 050 MBPAB | REMOVE FAIRING ASSEMBLY, P/N 65-10505-271. REQD_____ NOT REQD_____ | | / | / |
| 95 | 060 MBPAB | REMOVE SUPPORT LINK. REQD_____ NOT REQD_____ MOVE SLEEVE, LINKS AND ASSOCIATED PARTS TO MBPCA FOR ABRASIVE BLAST | | / | / |
| 2122 | 070 MBPCA | ABRASIVE BLAST SLEEVE AND ASSOCIATED PARTS AND HARDWARE IAW T.O.1C-135(K)A-3-4 SEC 9 AND T.O. 1-1-2.REQD---NOT REQD---MOVE TO MBPAB | | / | / |
| 95 | 080 MBPAB | ACCOMPLISH VISUAL INSPECTION IAW SOW OC1560FL/78-1-45. REQD____ NOT REQD____ | | / | / |
| 3001 | 085 MTPIA | IAW SOW OC1560FL/78-1-45 AND T.O. 1C-135B-10 SECTION SIX PERFORM MAGNETIC PARTICLE INSPECTION ON P/N 65-10526-1 . REQD---NOT REQD--- POST 0-69, MTPIA BLDG 3001 | | / | / |
| 95 | 090 MBPAB | REMOVE CORROSION AND APPLY CORROSION PROTECTIVE FINISH TO ALL REWORKED SURFACES IAW T.O. 1C-135(K)A-3-4 & T.O. 1-1-2. | | / | / |

| 15.DISP-16.PDN/ STATION | OP NO. | 17.WORK TO BE ACCOMPLISHED | 18.MECH | 19"P" | 20"Q" |
|---|---|---|---|---|---|
| 95 | 100 MBPAB | REMOVE ALL LOCKWIRE AND COTTER PINS REPLACE WITH NEW MATERIAL UPON REASSEMBLY. REQ'D_____ NOT REQ'D_____ | | / | / |
| 95 | 110 MBPAB | REPLACE CORRODED, LOOSE OR DAMAGED FASTENERS NUTS NUT PLATES AND SCREWS IAW SOW OC156 FL/78 1 45. REQ'D_____ NOT REQ'D_____ | | E | / |
| 95 | 120 MBPAB | REMOVE MINOR SCRATCHES, NICKS AND CORROSION BY POLISHING [illegible] CLOTH 220 GRIT OR FINER. REQ'D_____ NOT REQ'D_____ | | / | / |
| 95 | [illegible] MBPAB | [illegible] AREAS WITH A SMALL TRIANGULAR FILE OR FILE CHASER REQD_____ NOT REQD_____ | | / | / |
| 95 | 140 MBPAB | USE STANDARD ORIGINAL TYPE RIVETS AND/OR ACCEPTED WELDING PROCEDURES TO CORRECT MINOR SEPERATION DEFECTS. REQD_____ NOT REQD_____ | | / | / |
| 3001 | 145 MTPIW | WELD HAT RING SECTION AS NECESSARY. REQUIRED ----NOT REQD WELDING ACCOMPLISHED AT POST K-73 | | / | / |
| 95 | 150 MBPAB | REPLACE ALL PARTS FOUND UNSERVICEABLE OR DAMAGED BEYOND PRESCRIBED OR SAMPLE REPAIR IAW SOW OC1560FL/78-1 45. | | / | / |
| 95 | 155 MBPAB | DISASSEMBLE BOX AND PREPARE PARTS FOR INSPECTION. | | / | / |
| 95 | 160 MQCIA | PERFORM PENETRANT INSPECTION/CHECK IAW SOW OC1560FL/78 1 45 AND T.O. [illegible]-135B-10 SEC SIX ON THE FOLLOWING [illegible]RTS: 65-10527-1 REQD---NOT REQD- 65-10527-2 REQD - NOT REQD--- 69-10330-6 REQD NOT REQD 65-15604 1 REQD---NOT REQD--- 69-12671-1 REQD-- NOT REQD - | | / | / |
| 95 | 165 MBPAB | REASSEMBLE BOX AFTER INSPECTION. | | / | / |
| 95 | 180 MBPAB | REPLACE LINK BRACKETS 69-10331-5 & 6 IAW T.O.1C-135B-10 FIG 6-39 AS REQD. REQD_____ NOT REQD_____ | | / | / |
| 95 | 190 MBPAB | REPLACE AFT RUB STRIP 66-10259(8EA) BRACKET. REQ'D_____ NOT REQ'D_____ | | / | / |

| 15236A * WORK CONTROL DOCUMENT * MISTR 1.DATE 88054 | PAGE 3 OF 3 PAGES | | | |
|---|---|---|---|---|
| 15.DISP-16.PDN/ STATION | OP NO. | 17.WORK TO BE ACCOMPLISHED | 18.MECH | 19"P" | 20"Q" |
| 95 | 200 MBPAB | SKIN,P/N 65-10505-407 REPAIR____REPLACE____NOT REQD____ | | / | / |
| 95 | 210 MBPAB | SKIN, 65-10505-406 REPAIR___REPLACE____NOT REQD____ | | / | / |
| 95 | 220 MBPAB | SKIN, 65-10505-405 REPAIR____REPLACE____NOT REQD____ | | / | / |
| 95 | 230 MBPAB | SKIN, 65-10505-404 REPAIR____REPLACE____NOT REQD____ | | / | / |
| 95 | 240 MBPAB | REPLACE DAMAGED NUT PLATES & SCREWS | | / | / |
| 95 | 250 MBPAB | FIRE SEALS, -203, & -204 REPAIR____REPLACE____NOT REQD____ | | / | / |
| 95 | 260 MBPAB | HEAT SHIELDS, -831 & -832 REPAIR____REPLACE____NOT REQD____ | | / | / |
| 95 | 270 MBPAB | REPLACE ALL ALUMINUM PARTS WITH STAINLESS STEEL PARTS IAW SOW OC560FL/78-11-45 | | / | / |
| 95 | 280 MBPAB | INSPECT & REPLACE DAMAGED NUTPLATES AND SCREWS. REQ'D_____ NOT REQ'D_____ | | / | / |
| 95 | 290 MBPAB | INSTALL FAIRING ASSY (-271). NOTE: PRIOR TO INSTALLATION CONDUCT THOROUGH CLOSE OUT INSPECTION. | | / | / |
| 95 | 300 MBPAB | INSTALL SUPPORT LINK AND BUSHINGS REQD____NOT REQD____ | | / | / |
| 95 | 310 MBPAB | REINSTALL ALL PARTS REMOVED FOR REPAIRS AND INSPECTION. | | / | / |
| 95 | 320 MBPAB | ATTACH ACCESS PANELS AND HARDWARE [illegible] SLEEVE. MOVE TO MBPCB | | / | / |
| 2122 | 330 MBPCB | FINAL WASH AND CORROSION TREAT | | / | / |
| 2122 | 340 MBPCB | REFINISH AND PAINT IAW SOW OC1560FL/ 78-1-45 AND T.O. 1C-135(K)A-3-4 SEC11. MOVE TO MBPAB | | / | / |
| 95 | 350 MBPAB | WORK COMPLETED, CONDITION TAG AND IDENTIFY PER MAOI 65-1 | / | E | / |
| | | MABEBS L. MU[illegible]MAX 3-22-89<br>MAQBF T. HA[illegible] 3-22-89<br>MBPAB D. LEN[illegible] 3-22-89<br>MABSCS H.NOUTIN 3-22-89 | | | |

15236A

15236B

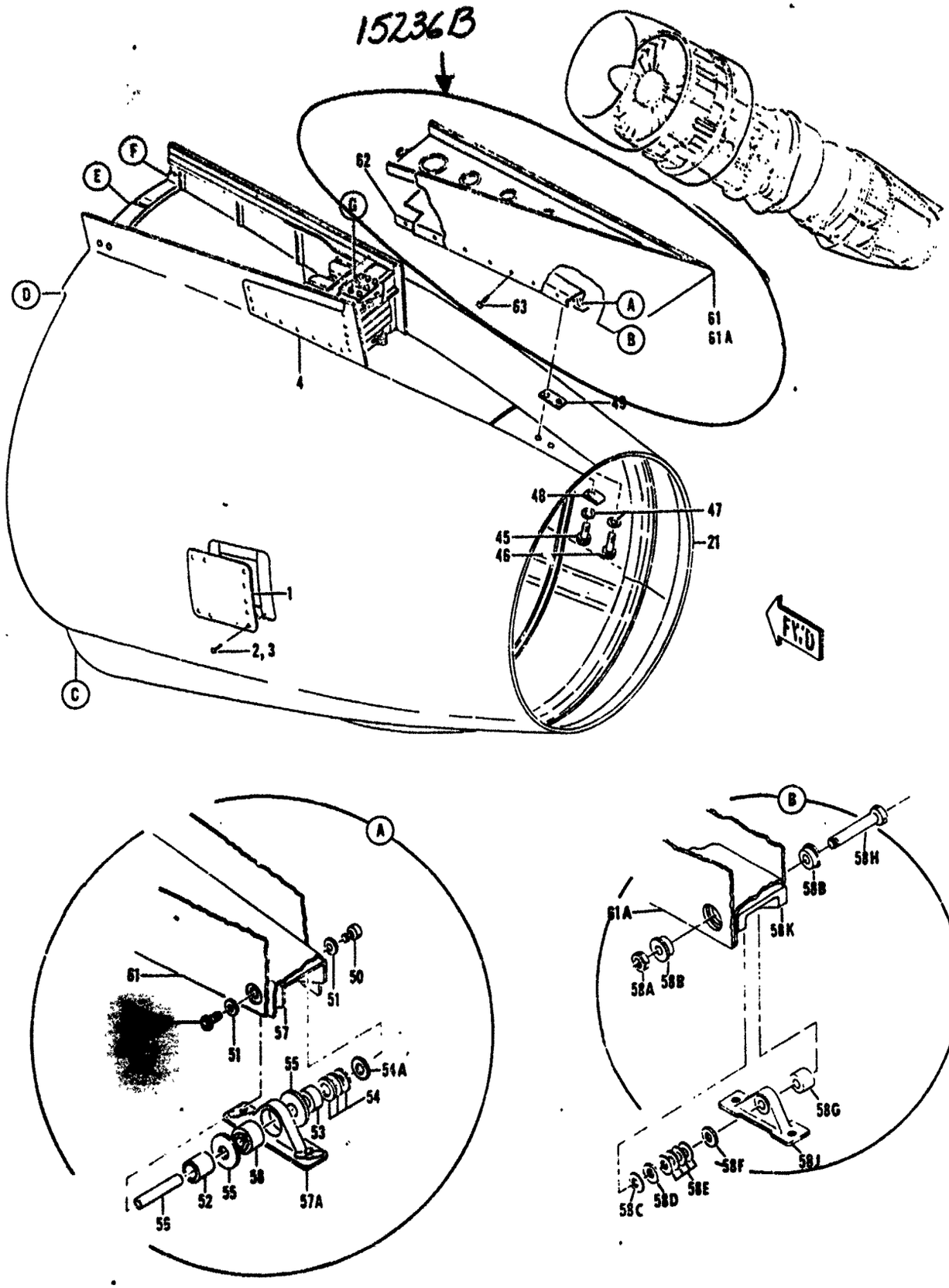


Figure 4-19. Aft Thrust Reverser and Sleeve Assembly (Sheet 1 of 3)

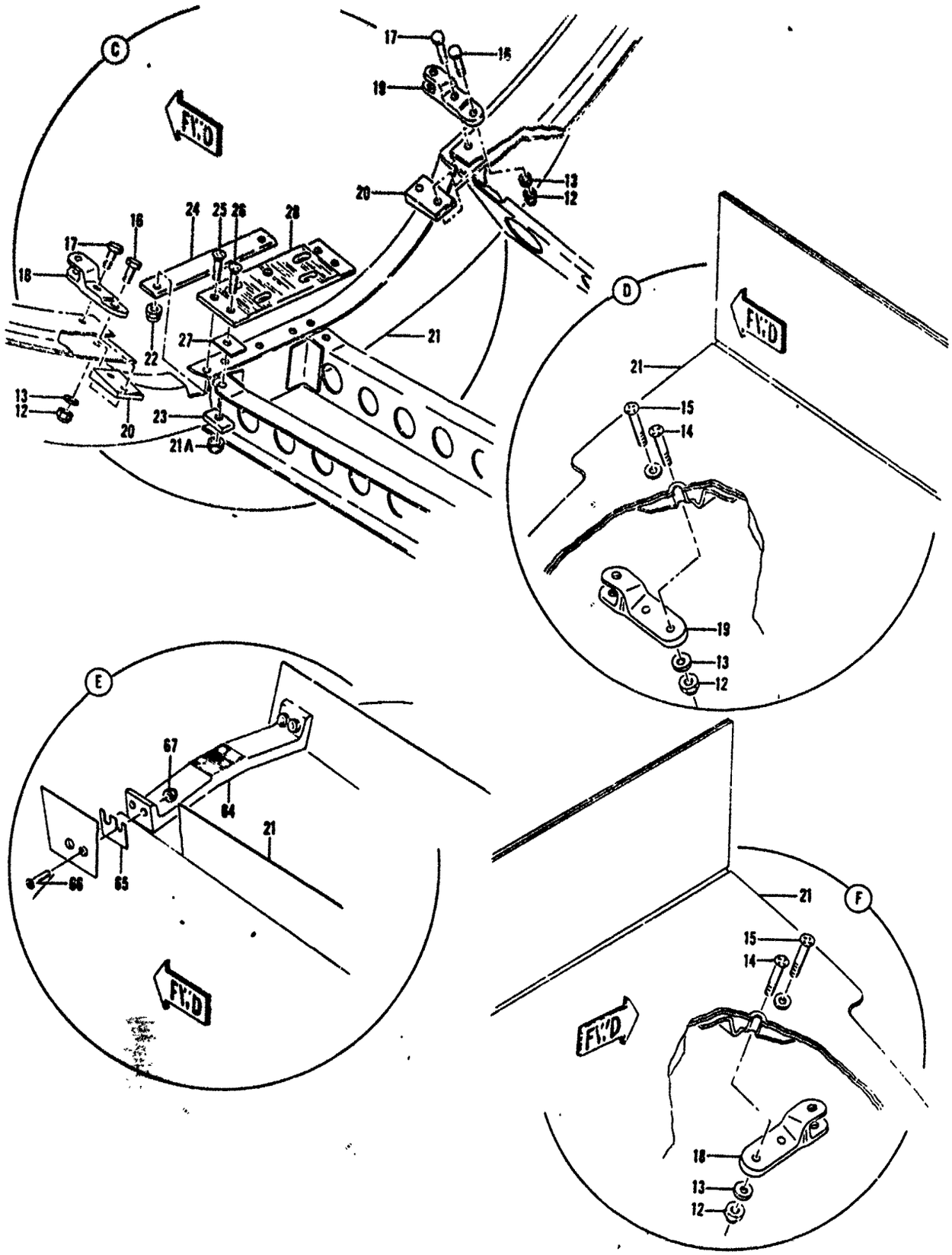


Figure 4-19. Aft Thrust Reverser and Sleeve Assembly (Sheet 2 of 3)

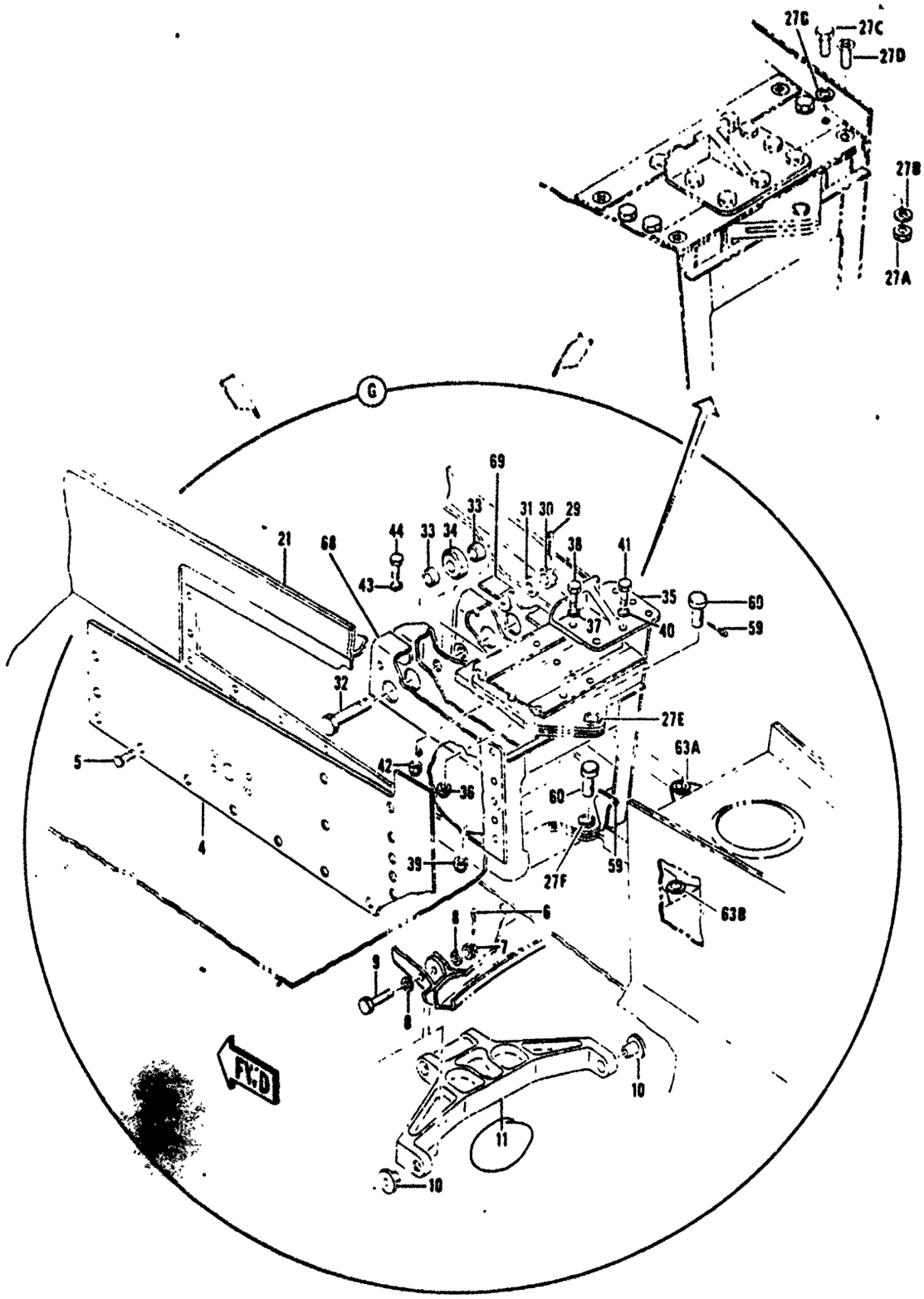


Figure 4-19. Aft Thrust Reverser and Sleeve Assembly (Sheet 3 of 3)

# FLOW PROCESS CHART

SUBJECT FAIRING, AFT DATE 4/10/89

PCN: 15237A WCD: 15236B WCDATE: 88069

CHART BEGINS 10

CHART ENDS 230 PREPARED BY: R. BOLANOS

| SYMBOLS | DESCRIPTION | SYMBOLS | DESCRIPTION |
|---|---|---|---|
| 10 | REC. & UNCRATE 2122 MABPCA | 180 | R/R SEAL ASSY #1 |
| | DELAY | 190 | R/R SEAL ASSY #2 |
| | MOVE TO STRIP MABPCA | | DELAY |
| | DELAY | | MOVE TO WASH 2280 MABPCB |
| 20 | STRIP PAINT | | DELAY |
| 30 | WASH W/ SOLVENT | 200 | WASH |
| 40 | DRAIN & CLEAN | 210 | REFINISH SURFACE |
| | DELAY | | DELAY |
| | MOVE TO SHEETMETAL 95 MABPAB | | MOVE TO SHEETMETAL 95 MABPAB |
| | | | DELAY |
| 50 | SHAKEDOWN INSPECTION | | MARK TO ID. |
| | | | CONDITION & TAG |
| | MOVE TO BLAST 2122 MABPCA | | DELAY |
| | | | STORAGE |
| 60 | BLAST | | |
| | DELAY | | |
| | MOVE TO SHEETMETAL 95 MABPAB | | |
| | | | |
| 70 | REMOVE CORROSION | | |
| 80 | R/R LOWER BULKHEAD STRUT | | |
| | REPLACE SUPPORT FITTING | | |
| | R/R FASTENERS | | |
| 110 | STRAIGHTEN ALL MINOR DENTS & BEND | | |
| 120 | SMOOTH ALL SCRATCHES | | |
| 130 | R/R LEFT & RIGHT SKINS | | |
| 140 | REPLACE UPPER BULKHEAD | | |
| 150 | " RUB STRIPS | | |
| 160 | " FITTING ASSY | | |
| 170 | " BONDINGS | | |

| 15236B * WORK CONTROL DOCUMENT * MISTR 1.DATE 88069 PAGE 1 OF 2 PAGES |
|---|

| 2.ORIG/PROD NR | 3.QUANTITY | 4.PROD SECTION/RCC | 5.DATE SCHLD | 6.DATE COMP |
|---|---|---|---|---|
| 15237A | | MBPAB | 89100 | |

| 7.PART NUMBER | 9.ITEM SERIAL NR | 8/12.TECH DATA/OPTIONAL |
|---|---|---|
| 65-10505-271 | | 1C-135(K)A-3-4 C/N: OC-1560FL/78-1-62,3AUG78 |
| 10.MODEL/DESIGN/SERIES | 11.STOCK NR | FILL IN ANY ADD'L WORK |
| KC 135 | 1560003174274FL | REQ'D. |

| 13.MISC | 14.NOUN/END ITEM NOUN |
|---|---|
| | FAIRING, AFT |
| | [illegible] MULLINAX /MABEPS/65288 |

| 15.DISP DESCRIPTION | 16.PDN/ OP NO. | 17.WORK TO BE ACCOMPLISHED | 18.MEC | 19.[illegible] | 20.[illegible] |
|---|---|---|---|---|---|
| 2122 | 010 MBPCD | RECEIVE & [illegible] | | / | / |
| 2122 | 020 MBPCA | STRIP ALL PAINT IAW 1C-135(K)A-3-4 | | / | / |
| 2122 | 030 MBPCA | WASH INTERIOR & EXTERIOR WITH SOLVENT P-D680 | | / | / |
| [illegible] | [illegible] MBPCA | DRAIN AND DRY WITH A LENT FREE CLOTH OR CLEAN DRY COMPRESSED AIR. MOVE TO [illegible] | | / | / |
| 95 | ~~050~~ 060 MBPAB | ACCOMPLISH SHAKEDOWN INSPECTION IAW SOW. ANNOTATE DISCREPANCIES. | | / | / |
| 2122 | ~~060~~ 050 MBPCA | ABRASIVE BLAST TO REMOVE EXHAUST DEPOSITS IAW T.O. 1C-135(K)A-3-4. REQ___ NOT REQ___ | | / | / |
| 95 | 070 MBPAB | REMOVE CORROSION & TREAT IAW T.O. 1C-135(K)A-3-4, SEC IV. REQ___ NOT REQ___ | | / | / |
| 95 | 080 MBPAB | REPAIR OR REPLACE LOWER BULKHEAD STRUT P/N 65-10505-279 REQ___ NOT REQ___ | | / | / |
| 95 | 090 MBPAB | REPLACE SUPPORT FITTING, P/N 69-12687-2. REQ___ NOT REQ___ (FITTINGS). | | / | / |
| 95 | 100 MBPAB | REPAIR OR REPLACE ALL LOOSE, MISSING OR DEFECTIVE FASTENERS. | | / | / |
| 95 | 110 MBPAB | STRAIGHTEN ALL MINOR DENTS & BENDS. REQ___ NOT REQ___ | | / | / |
| 95 | 120 MBPAB | SMOOTH ALL SCRATCHES, ABRASIONS AND NICKS. REQ___ NOT REQ___ | | / | / |
| 95 | 130 MBPAB | REPAIR LEFT AND RIGHT SKINS AS REQ. REQ'D_____ NOT REQ'D_____ | | / | / |

| 15.DISP | 16.CON/ STATION | OP NO. | 17.WORK TO BE ACCOMPLISHED | 18.MECH | 19"P" | 20"Q" |
|---|---|---|---|---|---|---|
| | 95 | 140 MBPAB | REPLACE UPPER BULKHEAD P/N 65-10505-212. REQ___ NOT REQ___ | | / | / |
| | 95 | 150 MBPAB | REPLACE RUB STRIPS ( 227 & 229) REQ___ NOT REQ___ | | / | / |
| | 95 | 160 MBPAB | REPLACE FITTING ASSEMBLY P/N 69-12689 REQD---NOT REQD---- | | | / |
| | 95 | 170 | REPLACE BUSHING REQ___ NOT REQD___ | | | |
| | 95 | 180 MBPAB | REPAIR OR REPLACE SEAL ASSEMBLY P/N 69-12695-1. REQ___ NOT REQ___ | | | / |
| | 95 | 190 MBPAB | REPAIR OR REPLACE SEAL ASSY P/N 69-12695-2. REQD-------NOT REQD------ | | | |
| | 2280 | 200 MBPCB | FINAL WASH | | / | / |
| | 2280 | 210 MBPCB | REFINISH ALL SURFACES EXCEPT OUTER SKIN IAW WORK STTATEMENT T.O. 1C-135(K)A-3-4. MOVE TO BLDG 95. | | / | / |
| | 95 | 220 MBPAB | MARK EA FAIRING WITH A PERMANENT MEANS OF IDENTIFICATION. | | / | / |
| | 95 | 230 MBPAB | WORK COMPLETED, CONDITION TAGGED IAW AFM 67-L. [illegible] NOTE: PART WILL HAVE DD FORMS 586, 587 OR 588 ID LABELS APPLIED TO COMPLETED ITEM IAW MAUI 66-4. ACCEPTANCE DATE ON THE LABEL ALONG WITH "M" STAP OF THE PERSON PLR FORMING THE OVERHAUL. CAUTION: SURFACES TO WHICH LABELS ARE APPLIED MUST BE FREE OF CONTAM-INATION. NOTE: COMPLETE "REMARKS" COLUMN OF AFLC FORM 1574 IAW MAUI 66-14, THIS PARA. NOT APPLICABLE TO NON-PRO-GRMMED A/C WORKLOAD. | / | | |
| | | | COORDINATION<br><br>MABEBS L. MULLINAX 13 FEB 89<br><br>MABSFS D. TANNI 13 FEB 89<br><br>MABPAB DONNA LENUX 13 FEB 89<br><br>MAWBF TED HAYES 13 FEB 89 | | | |

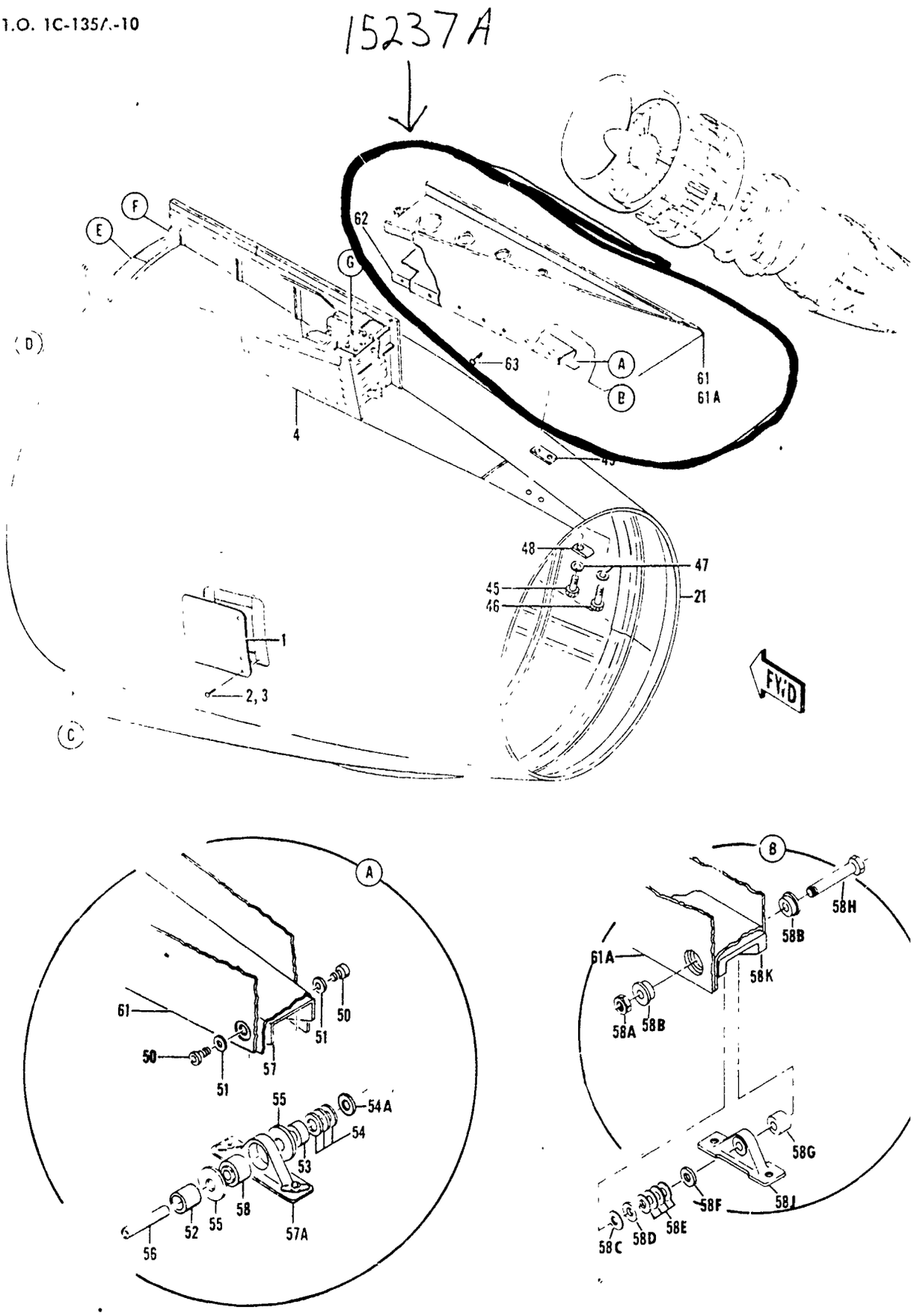


Figure 4-19 Aft Thrust Reverser and Sleeve Assembly (Sheet 1 of 3)

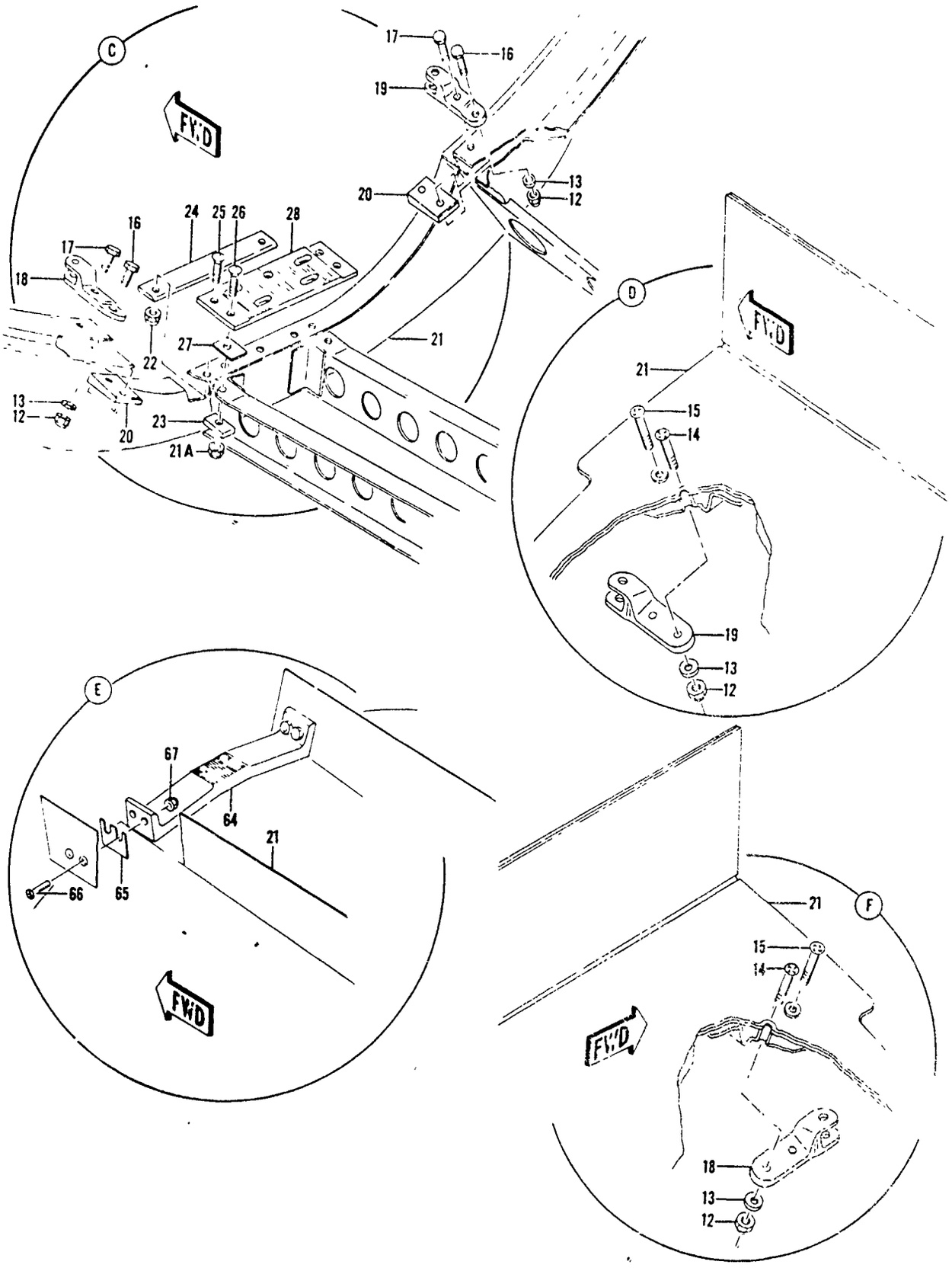


Figure 4-19 Aft Thrust Reverser and Sleeve Assembly (Sheet 2 of 3)

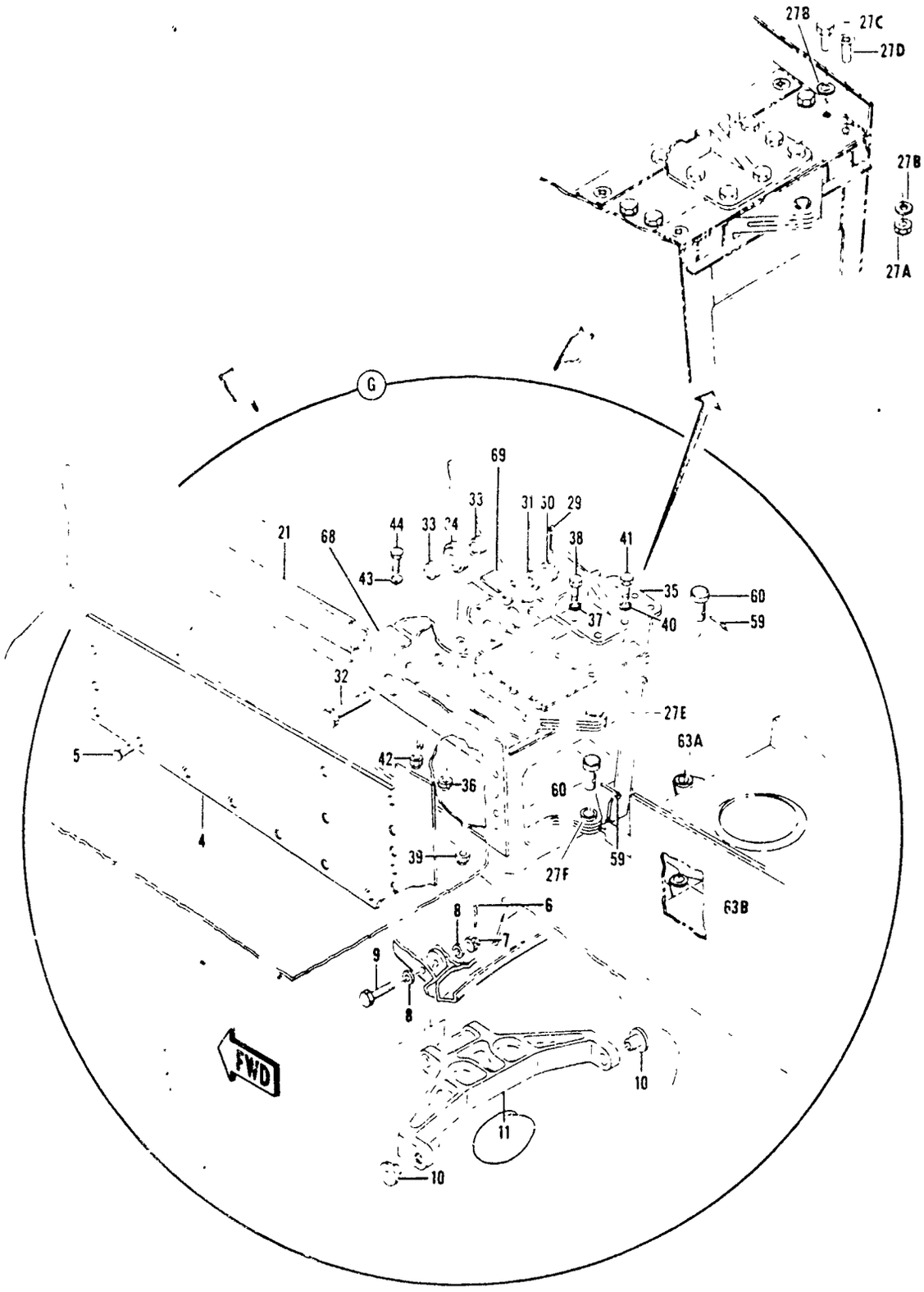


Figure 4-19. Aft Thrust Reverser and Sleeve Assembly (Sheet 3 of 3)

| FIGURE & INDEX NO | PART NUMBER | DESCRIPTION 1 2 3 4 5 6 7 | UNITS PER ASSY | CODE |
|---|---|---|---|---|
| 4-19 | | | | |
| | 65-10505-402 | SLEEVE ASSY, Aft thrust reverser (optional 65-10505-401, 65-10505-353 and 65-10505-269; 65-10505-402 preferred for replacement) (see figure 4-18, index 43) | Ref | |
| -1 | 65-10505-11 | . ACCESS PANEL ASSY, Bottom and sides | 3 | |
| | | (ATTACHING PARTS) | | |
| -2 | NAS517-3-3 | . SCREW (Used on side access panels). | 32 | |
| -3 | NAS517-3-2 | . SCREW (Used on bottom access panels). | 16 | |
| | | ---------*--------- | | |
| -4 | 65-10505-360 | . PANEL ASSY, Access (optional 65-10505-268; 65-10505-360 preferred for replacement) | 1 | |
| | 65-10505-361 | . PANEL ASSY, Access (opposite 65-10505-360) (optional 65-10505-254, 65-10505-361 preferred for replacement) | 1 | |
| | | (ATTACHING PARTS) | | |
| -5 | NAS517-3-2 | . SCREW | 32 | |
| | | ---------*--------- | | |
| -6 | AN381-2-8 | . PIN, Cotter | 8 | |
| -7 | AN320C4 | . NUT | 8 | |
| -8 | AN960C416 | . WASHER. | 16 | |
| -9 | BAC-B30BH-4-12 | . BOLT. | 8 | |
| | 66-10526 | . LINK ASSY, Support. | 4 | |
| -10 | 66-10244 | . . BUSHING | 2 | |
| -11 | 66-10526-1 | . . LINK. | 1 | |
| -12 | NAS679C3W | . NUT | 8 | |
| -13 | AN960C10 | . WASHER. | 8 | |
| -14 | NAS517-3-13 | . SCREW | 2 | |
| -15 | NAS517-3-15 | . SCREW | 2 | |
| -16 | BAC-B30BG-3-13A | . BOLT. | 2 | |
| -17 | BAC-B30BG-3-15A | . BOLT. | 2 | |
| -18 | 65-10527-1 | . FITTING, Left lower, right upper. | 2 | |
| -19 | 65-10527-2 | . FITTING, Right lower, left upper. | 2 | |
| -20 | 66-10240-2 | . FILLER, Lower fitting | 2 | |
| -21 | 65-10505-403 | . SLEEVE ASSY (Preferred replacement for 65-10505-400 and 65-10505-270) | 1 | E |
| -21 | 65-10505-400 | . SLEEVE ASSY (Optional 65-10505-403 and 65-10505-270, 65-10505-403 preferred for replacement) | 1 | C |
| -21 | 65-10505-270 | . SLEEVE ASSY (Optional 65-10505-400 and 65-10505-403, 65-10505-403 preferred for replacement) | 1 | D |
| -21A | MS20500-428 | . . NUT | 2 | |
| -22 | MS20500-1032 | . . NUT | 2 | |
| -23 | 66-10240 | . . FILLER, Radius. | 2 | |
| -24 | 66-10240-1 | . . FILLER, Radius. | 1 | |
| -25 | BAC-B30BF-3-C7 | . . BOLT. | 2 | |
| -26 | NAS560HK4-10 | . . BOLT. | 2 | |
| -27 | BAC-S40SD-13-17 | . . SHIM, Laminated (make from BAC1524-62SS). | 2 | |
| -27A | NAS679A3W | . . NUT | 8 | |
| -27B | AN960C10L | . . WASHER. | 8 | |
| -27C | AN3C4A | . . BOLT. | 4 | |
| -27D | BACB30LH3U3 | . . BOLT (Optional BACB30BF3C3 or BACB30BF3-3). | 4 | |
| | 69-12671 | . . FITTING ASSY, Hinge trailing edge fairing | 1 | |
| | 69-12671-1 | . . . FITTING, Hinge. | 1 | |
| -27E | NAS77A5-13P | . . BUSHING, Flanged. | 2 | |
| | 65-15604 | . . FITTING ASSY, Hinge, aft thrust reverser. | 1 | |
| | 65-15604-1 | . . . FITTING, Hinge. | 1 | |
| -27F | NAS77A5-13P | . . . BUSHING, Flanged. | 2 | |
| -28 | 66-10242 | . FITTING, Lower serrated | 1 | |
| -29 | AN381-3-14 | . PIN, Cotter | 1 | |
| -30 | AN320C6 | . NUT | 1 | |
| -31 | AN960C616 | . WASHER. | 1 | |
| -32 | BAC-B30BH-6-22 | . BOLT. | 1 | |
| -33 | NAS1057T6-028 | . SPACER. | 2 | |
| -34 | AC22063 | . BEARING, Needle (60380) (BAC-B10B-317). | 1 | |
| -35 | 69-10330-6 | . STOP (Optional 69-10330-4). | 1 | |
| | | (ATTACHING PARTS) | | |
| -36 | NAS679A3W | . NUT | 5 | |
| -37 | AN960C10L | . WASHER. | 5 | |
| -38 | NAS501-3-6A | . BOLT. | 5 | |

| FIGURE & INDEX NO | PART NUMBER | DESCRIPTION 1 2 3 4 5 6 7 | | |
|---|---|---|---|---|
| 4-19(Cont) | | | | |
| -39 | NAAS679C3W | . NUT | 1 | |
| -40 | AN960C10 | . WASHER | 1 | |
| -41 | AN3C5A | . BOLT | 1 | |
| | | ---------*--------- | | |
| -42 | NAS679A3W | . NUT | 2 | |
| -43 | AN960C10L | . WASHER | 2 | |
| -44 | BAC-B30BF-3-6A | . BOLT | 2 | |
| -45 | AN4C6A | . BOLT | 1 | |
| -46 | AN4C5A | . BOLT | 1 | |
| -47 | AN960C416 | . WASHER | 2 | |
| -48 | 65-10505-824 | . FILLER, Radius (make from AISI301 sheet per MIL-S-5059, comp 30, ser. cond. 2D 1/2 hard, 0.20 x 3.3 x 3.4 inches) | 1 | |
| -49 | 65-10505-209 | . SHIM, Laminated | 1 | |
| -50 | MS16996-10 | . SCREW (Optional [illegible] and [illegible]-10B) | 2 | |
| -51 | AN960-10L | . WASHER | 2 | |
| -52 | NAS42HT10-28 | . SPACER | 1 | A |
| -53 | NAS42HT10-14 | . SPACER | 1 | A |
| -54 | AN960-516 | . WASHER | 3 | A |
| -54A | AN960-516L | . WASHER | 1 | A |
| -55 | MS15795-811 | . WASHER (Optional BACW10P115S) | 2 | A |
| -56 | 66-11683 | . PIN | 1 | A |
| -57 | 69-12687-2 | . SUPPORTING FITTING | 1 | A |
| | 69-12689 | . FITTING ASSY, Anchor, fairing | 1 | A |
| -57A | 69-12687-1 | . . FITTING, Anchor | 1 | A |
| -58 | BS[illegible]-5000-G | . . BEARING (81376) (BACB10A203GD) (optional KWB-5SSG (97613)) | 1 | A |
| -58A | NAS509-5 | . NUT | 1 | B |
| -58B | 66-20173-1 | . BUSHING, Flanged | 2 | B |
| -58C | 66-21431-1 | . SHIM, Laminated | 1 | B |
| -58D | AN960-516 | . WASHER | 1 | B |
| -58E | AN960-516L | . WASHER | 4 | B |
| -58F | NAS42HT10-10 | . SPACER | 1 | B |
| -58G | NAS42HT10-22 | . SPACER (Make from NAS42HT10-28) | 1 | B |
| -58H | BACB30GN5-[illegible] | . BOLT | 1 | B |
| -58J | 69-30242-1 | . FITTING, Anchor (optional 69-12689-2) | 1 | B |
| -58K | 69-29[illegible]1-1 | . SUPPORT FITTING | 1 | B |
| -59 | AN380-3-3 | . PIN, Cotter | 2 | |
| -60 | MS20392-4C21 | . PIN, Flathead (optional MS20392-4-21) | 2 | |
| -61 | 65-10505-271 | . FAIRING ASSY, Aft | 1 | A |
| -61A | 65-10505-354 | . FAIRING ASSY, Aft | 1 | B |
| -62 | 69-12695-1 | . . SEAL ASSY, Fairing | 1 | |
| | 69-12695-2 | . . SEAL ASSY (Opposite 69-12695-1) (ATTACHING PARTS) | 1 | |
| -63 | NAS517-3-2 | . . SCREW (Optional BACB30LU3-2) | 14 | |
| | | ---------*--------- | | |
| | 65-15593 | . . FITTING ASSY, Hinge, aft fairing | 1 | |
| | 65-15593-1 | . . . FITTING, Hinge | 1 | |
| -63A | NAS76A5-004P | . . . BUSHING, Plain | 1 | |
| | 69-12679 | . . FITTING ASSY, Hinge, aft fairing | 1 | |
| | 69-12679-1 | . . . FITTING, Hinge | 1 | |
| -63B | NAS76A5-004P | . . . BUSHING, Plain | 1 | |
| -64 | 65-16771-1 | . FITTING, Support | 1 | |
| -65 | BAC540SC22-27 | . SHIM (Make from BAC1524-14SS) | AR | |
| -66 | NAS1221-4-15 | . BOLT | 4 | |
| -67 | MS20500-428 | . NUT | 4 | |
| -68 | 69-10333-1 | . CHANNEL ASSY | 1 | |
| -69 | 69-10333-2 | . CHANNEL ASSY | 1 | |
| | *65-98055-2 | KIT ASSY, Aft fairing attach fitting replacement | 1 | |
| | 65-99332-2 | KIT ASSY, Sleeve structure modification | 1 | |

A Used On 65-10505-269
B Used On 65-10505-353, -401 and -402
C Used On 65-10505-401
D Used On 65-10505-269 and -353
E Used On 65-10505-402

*See detailed illustration B.
Kit consists of items 58A thru 58K.

# FLOW PROCESS CHART

SUBJECT AFT FAIRING DATE 4/4

PCN: 15237A WCD: 15237A WCDDATE: 89073

CHART BEGINS

CHART ENDS PREPARED BY: MICHAEL

| SYMBOLS | DESCRIPTION | SYMBOLS | DESCRIPTION |
|---|---|---|---|
| [illegible] | [illegible] | [illegible] | DELAY |
| | DELAY | [illegible] | [illegible] |
| | [illegible] | | DELAY |
| | DELAY | | [illegible] |
| [illegible] | STRIP PAINT/WASH [illegible] | | DELAY |
| | DELAY | 180 | [illegible] ITEM 15 MBPAB |
| | MOVE | 190 | WORK COMPLETED 15 MBPAB |
| | DELAY | | DELAY |
| [illegible] | [illegible] PLAST [illegible] MBPAB | | [illegible] |
| | DELAY | | |
| | MOVE 45 | | |
| | DELAY | | |
| [illegible] | ACCOMPLISH ELI 95 MBPAB | | |
| | DELAY | | |
| [illegible] | [illegible] CONTROL 95 MBPAB | | |
| | DELAY | | |
| 890 | REPLACE RUSHING 95 MBPAB | | |
| 100 | REPLACE FITTING 95 MBPAB | | |
| 110 | REPLACE FASTENERS 95 MBPAB | | |
| 120 | REPAIR DENTS 95 MBPAB | | |
| 130 | SMOOTH SQUATCHES 95 MBPAB | | |
| 140 | REPAIR SKINS 95 MBPAB | | |
| 145 | REPLACE RUB STRIPS 95 MBPAB | | |
| | DELAY | | |
| 150 | 2280 MOVE MBPAB | | |
| | DELAY | | |
| 160 | FINAL WASH 2280 MBPAB | | |
| | DELAY | | |
| | MOVE | | |

| 15237A * WORK CONTROL DOCUMENT * MSTR 1.DATE 89073 PAGE 1 OF ? PAGES |
|---|

| 2.ORIG/PROD NR | 3.QUANTITY | 4.PROD SECTION/REC | 5.DATE SCHED | 6.DATE COMP |
|---|---|---|---|---|
| 15237A | | MBPAB | 89093 | |

| 7.PART NUMBER | 9.ITEM SERIAL NR | 8/12.TECH DATA/OPTIONAL |
|---|---|---|
| 65 10505-271 | | 1C-135(K)A-3-4 C/N: 0C-1560FL/78-1-62,3AUG78 |
| 10.MODEL/DESIGN/SERIES | 11.STOCK NR | FILL IN ANY ADD'L WORK |
| KC-135 | 1560008174274FL | REQ'D. |
| 13.MISC | 14.NOUN/END ITEM NOUN | |
| | FAIRING, AFT | |
| | PHYLLIS HEALD/MABCBO/65265 | |

| 15.DISP-16.PDN/SECTION | OP NO. | 17.WORK TO BE ACCOMPLISHED | 18.MECH | I"P" | J"O" |
|---|---|---|---|---|---|
| 2122 | 010 MBPCD | RECEIVE & UNCRATE | | / | |
| 2122 | 020 MBPCA | STRIP ALL PAINT IAW 1C-135(K)A-3-4 | | / | / |
| 2122 | 030 MBPCA | WASH INTERIOR & EXTERIOR WITH SOLVENT P-D680 | | / | / |
| 2122 | 040 MBPCA | ABRASIVE BLAST TO REMOVE EXHAUST DEPOSITS IAW 1C-135(K)A-3-4 REQ'D_____ NOT REQ'D_____ | | / | / |
| 2122 | 050 MBPCA | DRAIN & DRY WITH LINT FREE CLOTH OR CLEAN DRY COMPRESSED AIR | | / | / |
| 2122 | 060 MBPCA | TREAT FOR CORROSION 1C-135(K)A-3-4 SEC IV. MOVE TO MBPAB, BLDG 95. | | / | / |
| 95 | 070 MBPAB | ACC SHAKEDOWN INSP. IAW WORK STATEMENT. ANNOTATE DISCREPANCIES. | | | |
| 95 | 080 MBPAB | REMOVE CORROSION & TREAT IAW 1C-135 A-3-4 SEC IV. REQ'D_____ NOT REQ'D_____ | | / | / |
| 95 | 090 MBPAB | REPLACE BUSHINGS P/N NAS76A5-004P (2 PLACES ON UPPER / LOWER HINGE FITTINGS). | | / | / |
| 95 | 100 MBPAB | REPLACE SUPPORT FITTING 69-27531 1 REQ'D_____ NOT REQ'D_____ | | / | / |
| 95 | 110 MBPAB | REPAIR OR REPLACE ALL LOOSE, MISSING OR DEFECTIVE FASTENERS. | | E | / |
| 95 | 120 MBPAB | STRAIGHTEN ALL MINOR DENTS & BENDS REQ'D_____ NOT REQ'D_____ | | / | / |
| 95 | 130 MBPAB | SMOOTH ALL SCRATCHES, ABRASIONS, & NICKS REQ'D_____ NOT REQ'D_____ | | E | / |
| 95 | 140 MBPAB | REPAIR LEFT & RIGHT SKIN AS REQ'D. REQ'D_____ NOT REQ'D_____ | | E | / |

| 15237A * WORK CONTROL DOCUMENT * MISTR 1.DATE 09073 | PAGE 2 OF 2 PAGES | | | |
|---|---|---|---|---|
| 15.DISP-16.PDN/STATION | OP NO. | 17.WORK TO BE ACCOMPLISHED | 18.MECH | 19"P" | 20"Q" |
| 95 | 145 MBPAB | REPLACE RUB STRIPS, -217 & -220.<br>REQ'D_____NOT REQ'D_____ | | / | / |
| | 150 | MOVE TO BLDG 2280, MBPCB. N/A | | | |
| 2280 | 160 MBPCB | FINAL WASH. | | / | / |
| 2280 | 170 MBPCB | REFINISH ALL SURFACES EXCEPT OUTER SKIN IAW WORK STATEMENT T.O. 1C 135(K)A 3 4. PARA. 11 3D, MOVE TO BLDG 95, MBPAB. | | / | |
| 95 | 180 MBPAB | MARK LA FAIRING WITH A PERMANENT MEANS OF IDENTIFICATION. | | / | / |
| 95 | 190 MBPAB | WORK COMPLETED, CONDITION TAGGED IAW AFM 67 1, MOVE TO CRATING<br>NOTE: PART WILL HAVE OC ALC FORMS 306,307 OR 500 ID LABELS APPLIED TO COMPLETED ITEM IAW, MOI 66 4.<br>ACCEPTANCE DATE ON THE LABEL ALONG WITH "M" STAMP OF THE PERSON PERFORMING THE OVERHAUL.<br>CAUTION: SURFACES TO WHICH LABELS ARE APPLIED MUST BE FREE OF CONTAMINATION.<br>NOTE: COMPLETE "REMARKS" COLUMN OF AFLC FROM 1574 IAW MAOI 66-36, THIS PARA. NOT APPLICABLE TO NON-PROGRAMMED A/C WORKLOAD. | / | E | / |
| | | COORDINATION<br><br>MABEBS<br><br>MABSCS<br><br>[redacted]MABPAB<br><br>[redacted]QBF | | | |

```
?15237A
RECORD NOT FOUND      152

ENTER DATA AS NEEDED
 PROD ...ELSE 'END'
 <---->
?15237A
RCC  FAC PROD NO OPER  <--------DESCRIPTION---------> SK   OCC  T/S  HOURS  TECH

MBPAB F  15237A  00B10 REPAIR FAIRING AFT       004N FS   1.00  N   28.00    E
MBPCA B  15237A  00C10 WASH&STRIP,FAIRING AFT   004N WL   1.00  N    1.00    E
MBPCB D  15237A  00C20 FINAL WASH&PAINT FRNG AF004N B3   1.00  N    2.00    E
MBPCD B  15237A  00C50 UNCRATE FAIRING AFT      004N CQ   1.00  N     .40    E
MBPAB F  15237A  00D10 SHAKEDOWN INSP FRNG AFT 004N FS   1.00  N     .60    E
MBPAB F  15237A  00J10 FAIRING ASSY,AFT MFG     K235 FS   1.00  N    2.00    E

ENTER DATA AS NEEDED
 PROD ...ELSE 'END'
 <---->
```

15249A
15250A



| FIGURE & INDEX NO. | PART NUMBER | 1 2 3 4 5 6 7 DESCRIPTION | UNITS PER ASSY | USE ON CODE |
|---|---|---|---|---|
| 25 - | | | | |
| | 5-88190-105 | AILERON AND TAB ASSY, OUTBOARD WING (LH) (FOR NHA SEE FIG. 24) | REF | |
| | 5-88190-106 | AILERON AND TAB ASSY, OUTBOARD WING (RH) (FOR NHA SEE FIG. 24) | REF | |
| | 5-88190-103 — 15249A | . AILERON ASSY, OUTBOARD WING (LH ONLY) | 1 | |
| | 5-88190-117 — 15249A | . AILERON ASSY, OUTBOARD WING (FOR SPARES ONLY) (CONSISTS OF PARTS DENOTED BY (S)) (LH ONLY) | REF | |
| | 5-88190-104 | . AILERON ASSY, OUTBOARD WING (RH ONLY) | 1 | |
| | 5-88190-118 \ 15250A | . AILERON ASSY, OUTBOARD WING (FOR SPARES ONLY) (CONSISTS OF PARTS DENOTED BY (S)) (RH ONLY) | REF | |
| 1 | (S)740D10-12 | . . JUMPER ASSY, COP BOND 35 AMP (91812) (ALTERNATE 4E3E (79550)) (BACJ40D10-12) (ATTACHING PARTS) | 4 | |
| | (S)AN3-11A | . . BOLT (FOR REPLACEMENT ORDER BACB30NE3-12) | 4 | |
| | (S)NAS517-3-1 | . . SCREW (FOR REPLACEMENT ORDER BACB30LU3-2) | 2 | |
| | (S)NAS514P1032-10 | . . SCREW | 2 | |
| | (S)BACW10P44AL | . . WASHER, PLAIN | 4 | |
| | (S)BACW10P63AL | . . WASHER, PLAIN | 6 | |
| | (S)AN341-10 | . . NUT (FOR REPLACEMENT ORDER MS20341-10A) | 2 | |
| | (S)BACS40A13-29 | . . SHIM, LAM, 0.30 IN. THK | AR | |
| | (S)5-88190-23 | . . FILLER, AILERON, OUTBOARD WING. | 4 | |
| | (S)NAS679A3W | . . NUT (FOR REPLACEMENT ORDER 96-02 (56878) (80539). H10-3EAC (15653) T6S1032J (71087) RMLH9075-3W (72962) (BACN10JC3)) | 8 | |
| 2 | 65-8435-3 | . . PANEL ASSY, HONEYCOMB, OUTBOARD AILERON, HALF, INBOARD, UPPER (FOR REPLACEMENT ORDER 65-8435-9) (LH ONLY) | 1 | |
| 2 | 65-8435-13 | . . PANEL ASSY, HONEYCOMB, OUTBOARD AILERON, HALF, INBOARD, UPPER (FOR REPLACEMENT ORDER 65-8435-9) (LH ONLY) | 1 | |
| | 65-8435-4 | . . PANEL ASSY, HONEYCOMB, OUTBOARD AILERON, HALF, INBOARD, UPPER (FOR REPLACEMENT ORDER 65-8435-9) (RH ONLY) | 1 | |
| | 65-8435-14 | . . PANEL ASSY, HONEYCOMB, OUTBOARD AILERON, HALF, INBOARD, UPPER (FOR REPLACEMENT ORDER 65-8435-9) (FOR SPARES ONLY) (RH ONLY) | 1 | |
| 3 | 65-8435-1 | . . PANEL ASSY, HONEYCOMB, OUTBOARD AILERON, HALF, INBOARD, LOWER (FOR REPLACEMENT ORDER 65-8435-9) (LH ONLY) | 1 | |
| 3 | 65-8435-11 | . . PANEL ASSY, HONEYCOMB, OUTBOARD AILERON, HALF, INBOARD, LOWER (FOR REPLACEMENT ORDER 65-8435-9) (FOR SPARES ONLY) (LH ONLY) | 1 | |
| | 65-8435-2 | . . PANEL ASSY, HONEYCOMB, OUTBOARD AILERON, HALF, INBOARD, LOWER (FOR REPLACEMENT ORDER 65-8435-9) (RH ONLY) | 1 | |
| | 65-8435-12 | . . PANEL ASSY, HONEYCOMB, OUTBOARD AILERON, HALF, INBOARD, LOWER (FOR REPLACEMENT ORDER 65-8435-9) (FOR SPARES ONLY) (RH ONLY) | 1 | |
| 4 | 5-97697-1 | . . PANEL ASSY, HONEYCOMB, OUTBOARD AILERON, HALF, OUTBOARD, UPPER (FOR REPLACEMENT ORDER 5-97697-16) | 1 | |
| 4 | 5-97697-17 | . . PANEL ASSY, HONEYCOMB SKIN, OUTBOARD AILERON, HALF, OUTBOARD, UPPER (FOR REPLACEMENT ORDER 5-97697-16) | 1 | |
| 5 | 5-97697-15 | . . PANEL ASSY, HONEYCOMB, OUTBOARD AILERON, HALF, OUTBOARD, LOWER (FOR REPLACEMENT ORDER 5-97697-16) | 1 | |
| 5 | 5-97697-18 | . . PANEL ASSY, HONEYCOMB SKIN, OUTBOARD AILERON, HALF, OUTBOARD, LOWER (FOR REPLACEMENT ORDER 5-97697-16) | 1 | |
| | 9-64577-131 | . . TRAILING EDGE INSTL, OUTBOARD AILERON (LH ONLY) | 1 | |
| | (S)9-64577-131 | . . TRAILING EDGE INSTL, OUTBOARD AILERON (FOR SPARES ONLY) (CONSISTS OF PARTS DENOTED BY (S)) (LH ONLY) | 1 | |
| | 9-64577-132 | . . TRAILING EDGE INSTL, OUTBOARD AILERON (RH ONLY) | 1 | |
| | (S)9-64577-168 | . . TRAILING EDGE INSTL, OUTBOARD AILERON (FOR SPARES ONLY) (CONSISTS OF PARTS DENOTED BY (S)) (RH ONLY) | 1 | |
| | (S)9-64577-133 | . . . TRAILING EDGE ASSY, INBOARD, OUTBOARD AILERON (LH ONLY) | 1 | |

# Wing Control Surfaces

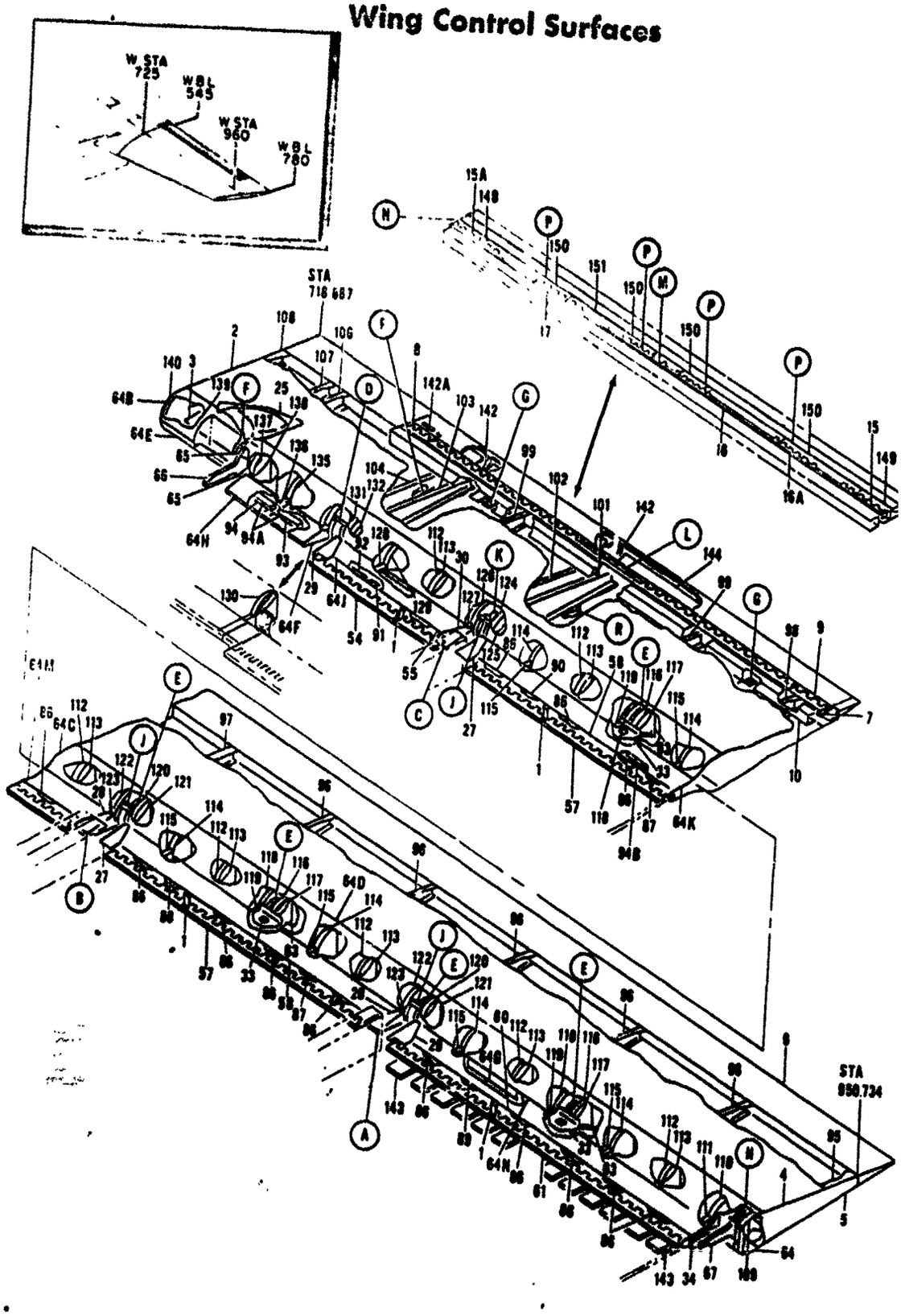


3153-25A

*Figure 25. Outboard Wing Aileron and Tab Assemblies (Sheet 1 of 5)*

## Wing Control Surfaces

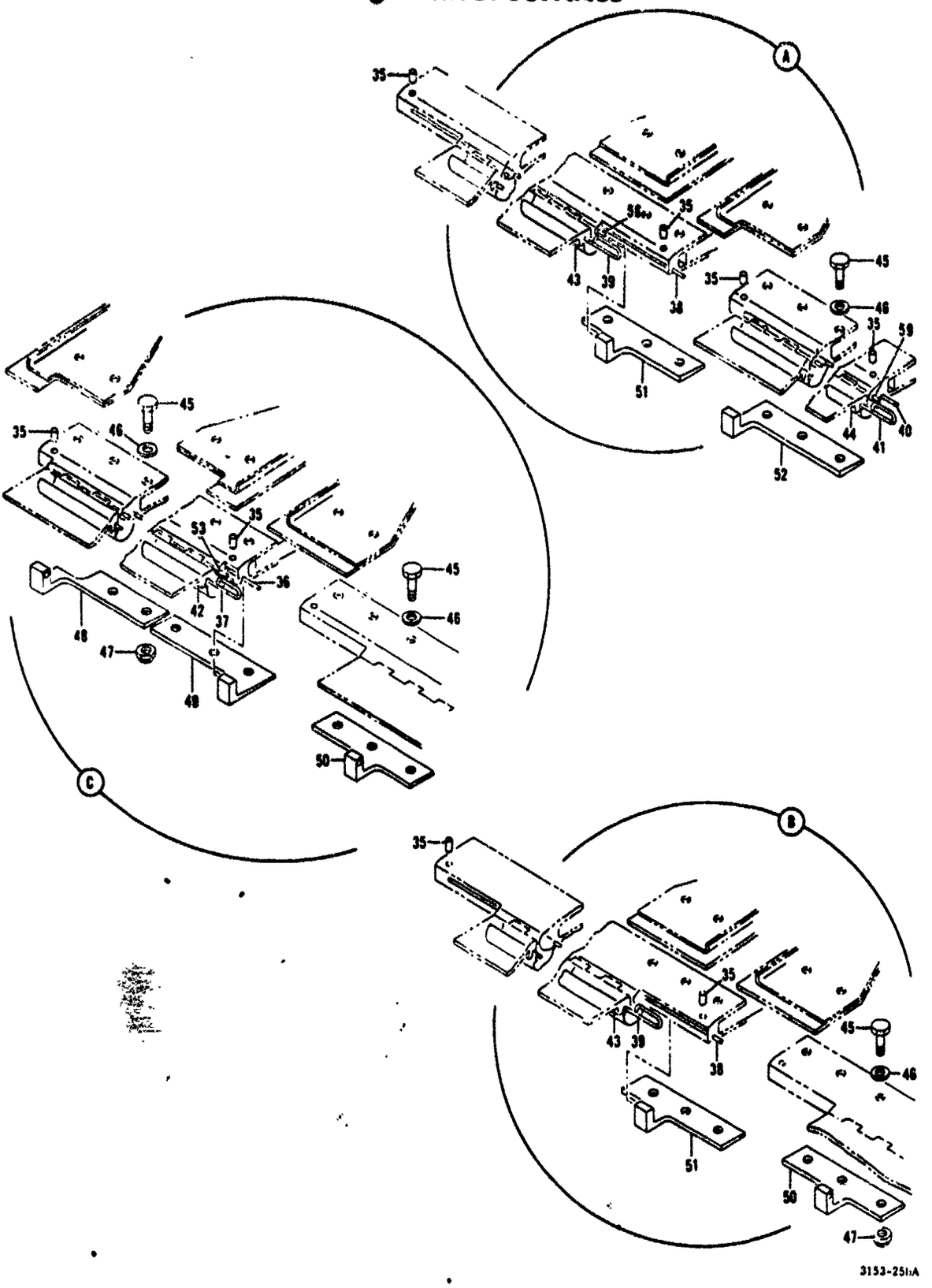


*Figure 25. Outboard Wing Aileron and Tab Assemblies (Sheet 2 of 5)*

# Wing Control Surfaces

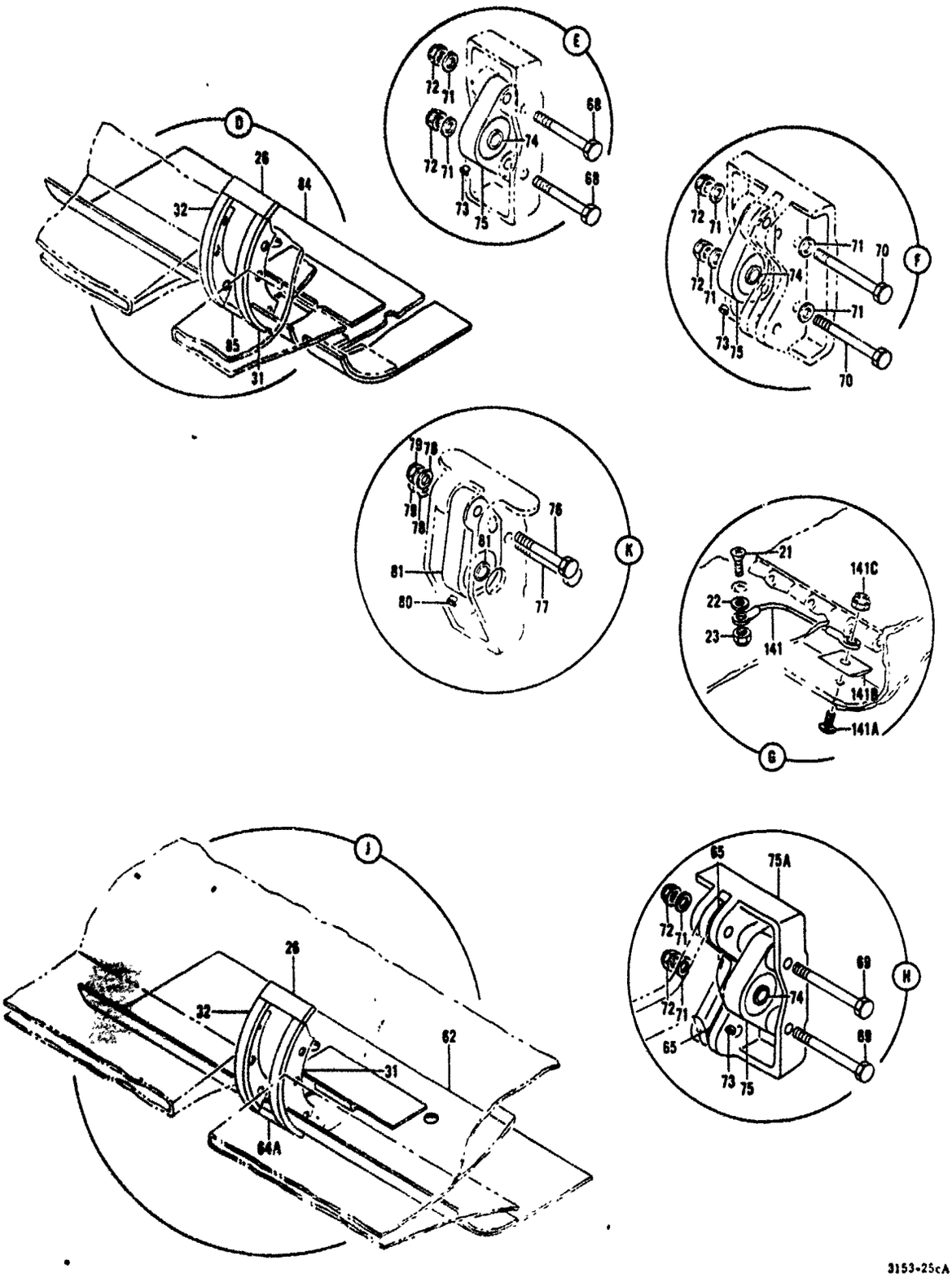


3153-25cA

*Figure 25. Outboard Wing Aileron and Tab Assemblies (Sheet 3 of 5)*

# Wing Control Surfaces

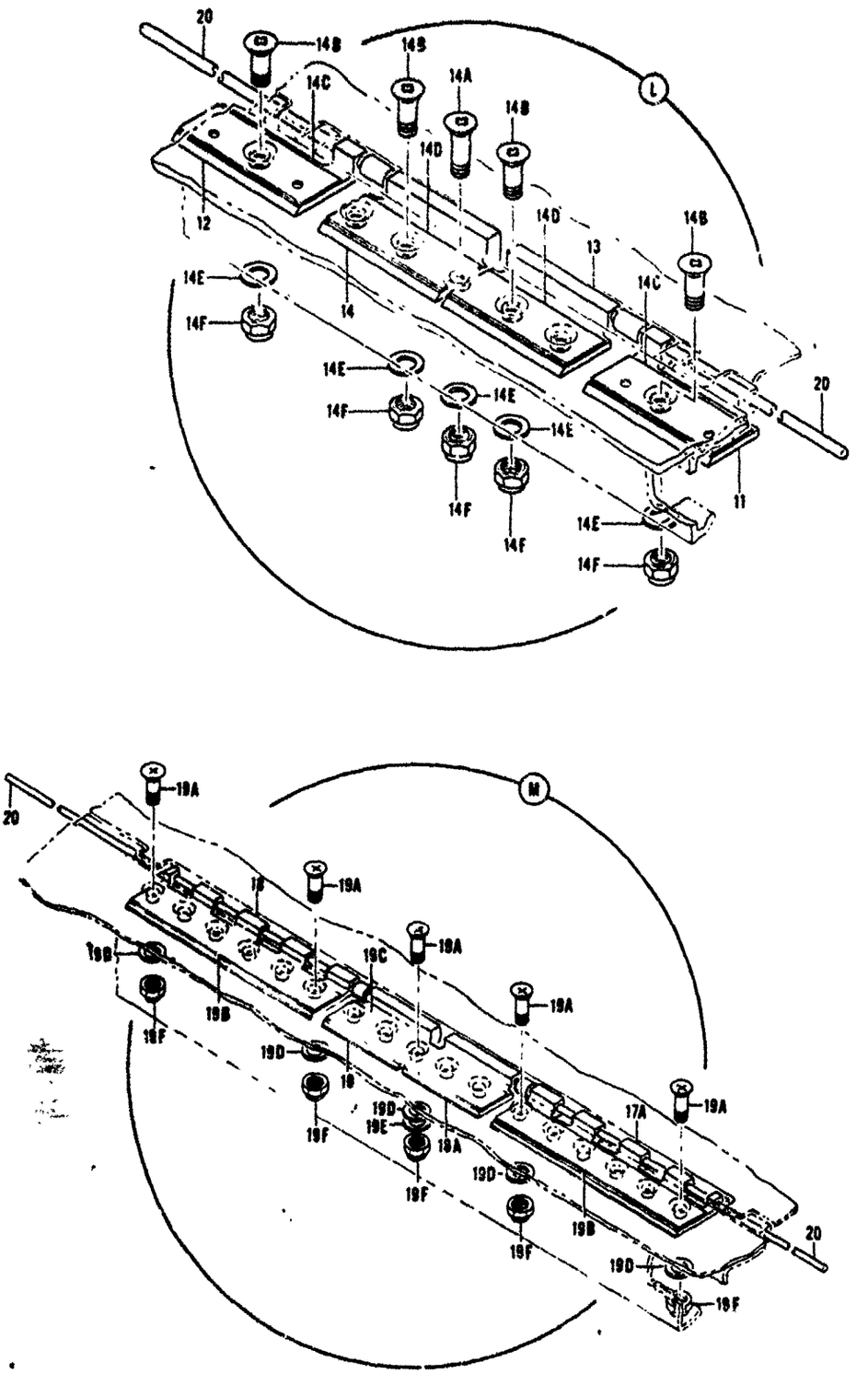


3153-25dA

*Figure 25. Outboard Wing Aileron and Tab Assemblies (Sheet 4 of 5)*

## Wing Control Surfaces

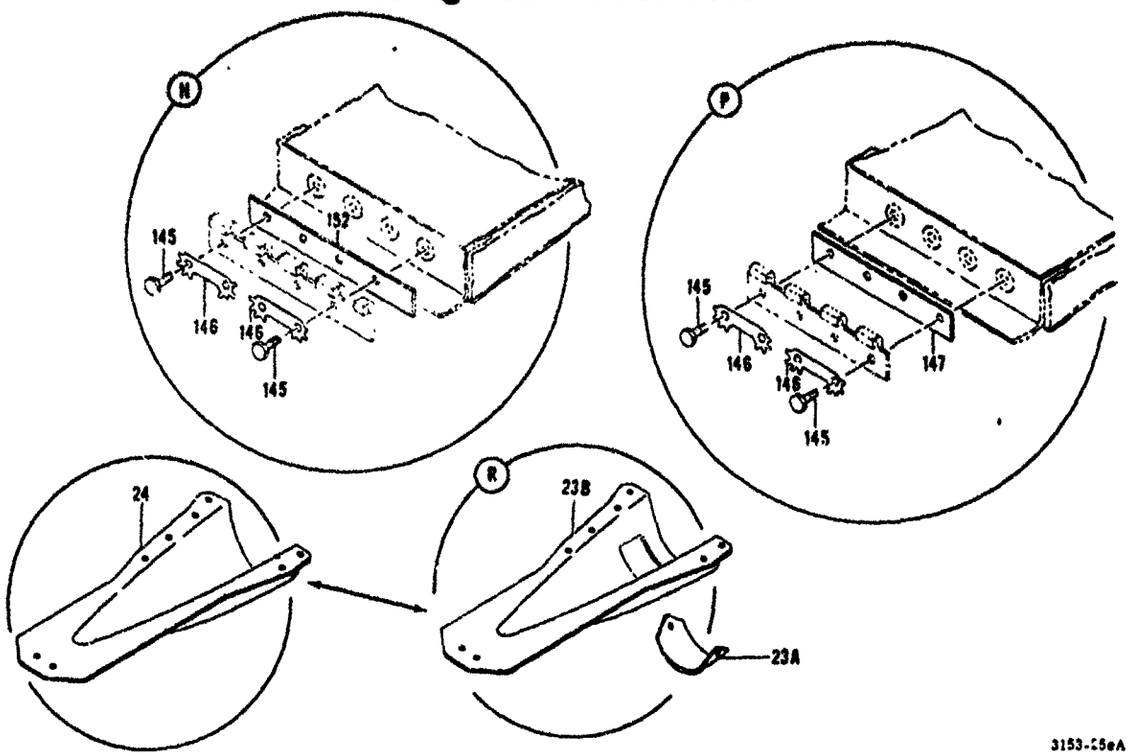


*Figure 25. Outboard Wing Aileron and Tab Assemblies (Sheet 5 of 5)*

| FIGURE & INDEX NO. | PART NUMBER | 1 2 3 4 5 6 7 DESCRIPTION | UNITS PER ASSY | USE ON CODE |
|---|---|---|---|---|
| 25 - | (S)9-64577-134 | . . . TRAILING EDGE ASSY, INBOARD, OUTBOARD AILERON . . (RH ONLY) | 1 | |
| 6 | (S)9-64577-85 | . . . TRAILING EDGE ASSY, OUTBOARD, OUTBOARD AILERON . (LH ONLY) | 1 | |
| | (S)9-64577-86 | . . . TRAILING EDGE ASSY, OUTBOARD, OUTBOARD AILERON . (RH ONLY) | 1 | |
| 7 | 66-14038-1 | . . . RETAINER, PIN, HINGE, OUTBOARD AILERON . . . . . (LH ONLY) | 1 | |
| | 66-14038-2 | . . . RETAINER, PIN, HINGE, OUTBOARD AILERON . . . . . (RH ONLY) | 1 | |
| 8 | 69-6177-[illegible] | . . . HINGE-HALF, TRAILING EDGE BEAM, OUTBOARD AILERON (LH ONLY) | 1 | |
| | 69-6177-[illegible] | . . . HINGE-HALF, TRAILING EDGE BEAM, OUTBOARD AILERON (RH ONLY) | 1 | |
| 9 | 69-6177-[illegible] | . . . HINGE-HALF, TRAILING EDGE BEAM, OUTBOARD AILERON (LH ONLY) | 1 | |
| | 69-6177-[illegible] | . . . HINGE-HALF, TRAILING EDGE BEAM, OUTBOARD AILERON (RH ONLY) | 1 | |
| 10 | 9-64577-135 | . . . HINGE-HALF, TRAILING EDGE, OUTBOARD AILERON . . . (LH ONLY)(WHEN EXHAUSTED USE 9-64577-169) | 1 | |
| | 9-64577-136 | . . . HINGE-HALF, TRAILING EDGE, OUTBOARD AILERON . . . (RH ONLY)(WHEN EXHAUSTED USE 9-64577-170) | 1 | |
| 11 | 69-6177-3 | . . . HINGE-HALF, TRAILING EDGE BEAM, OUTBOARD AILERON (LH ONLY) | 1 | |
| | 69-6177-4 | . . . HINGE-HALF, TRAILING EDGE BEAM, OUTBOARD AILERON (RH ONLY) | 1 | |
| 12 | 69-6177-4 | . . . HINGE-HALF, TRAILING EDGE BEAM, OUTBOARD AILERON (LH ONLY) | 1 | |
| | 69-6177-3 | . . . HINGE-HALF, TRAILING EDGE BEAM, OUTBOARD AILERON (RH ONLY) | 1 | |

| FIGURE & INDEX NO. | PART NUMBER | DESCRIPTION 1 2 3 4 5 6 7 | UNITS PER ASSY | US ON COL |
|---|---|---|---|---|
| 25 - | | | | |
| 13 | 69-6177-5 | . . . RETAINER, HINGE-HALF, TRAILING EDGE BEAM, . . . . OUTBOARD AILERON (LH ONLY) | 1 | |
| | 69-6177-6 | . . . RETAINER, HINGE-HALF, TRAILING EDGE BEAM, . . . . OUTBOARD AILERON (RH ONLY) | 1 | |
| 14 | 69-6177-6 | . . . RETAINER, HINGE-HALF, TRAILING EDGE BEAM, . . . . OUTBOARD AILERON (LH ONLY) | 1 | |
| | 69-6177-5 | . . . RETAINER, HINGE-HALF, TRAILING EDGE BEAM, . . . . OUTBOARD AILERON (RH ONLY) | 1 | |
| | | (ATTACHING PARTS) | | |
| 14A | NAS1503-3 | . . . BOLT, 100° CSK HD . . . . . | 1 | |
| 14B | NAS1503-3 | . . . BOLT, 100° CSK HD . . . . . | 6 | |
| 14C | BACS40B10-29 | . . . SHIM, LAM, 0.062 THK . . . . . | 2 | |
| 14D | BACS40B10-57 | . . . SHIM, LAM, 0.062 THK . . . . . | 2 | |
| 14E | AN960PD10L | . . . WASHER . . . . . | 7 | |
| 14F | NAS679A3W | . . . NUT (FOR REPLACEMENT ORDER 96-02 (56878) (80539) H10-3BAC (15653) T6S1032J (71087) RMLH9075-3W (72962) (BACN10JC3)) | 7 | |
| 15 | 69-33850-7 | . . . HINGE-HALF, TRAILING EDGE BEAM, OUTBOARD AILERON (FOR SPARES ONLY) (LH ONLY) | 1 | |
| | 69-33850-8 | . . . HINGE-HALF, TRAILING EDGE BEAM, OUTBOARD AILERON (FOR SPARES ONLY) (RH ONLY) | 1 | |
| 15A | 69-33850-8 | . . . HINGE-HALF, TRAILING EDGE BEAM, OUTBOARD AILERON (FOR SPARES ONLY) (LH ONLY) | 1 | |
| | 69-33850-7 | . . . HINGE-HALF, TRAILING EDGE BEAM, OUTBOARD AILERON (FOR SPARES ONLY) (RH ONLY) | 1 | |
| 16 | 9-64577-169 | . . . HINGE-HALF, TRAILING EDGE BEAM, OUTBOARD AILERON (FOR SPARES ONLY) (LH ONLY) (USE 9-64577-135 UNTIL EXHAUSTED) | 1 | |
| | 9-64577-170 | . . . HINGE-HALF, TRAILING EDGE BEAM, OUTBOARD AILERON (FOR SPARES ONLY) (RH ONLY) (USE 9-64577-136 UNTIL EXHAUSTED) | 1 | |
| 16A | 69-33850-12 | . . . HINGE-HALF, TRAILING EDGE BEAM, OUTBOARD AILERON (FOR SPARES ONLY) (LH ONLY) | 1 | |
| | 69-33850-11 | . . . HINGE-HALF, TRAILING EDGE BEAM, OUTBOARD AILERON (FOR SPARES ONLY) (RH ONLY) | 1 | |
| 17 | 69-33850-11 | . . . HINGE-HALF, TRAILING EDGE BEAM, OUTBOARD AILERON (FOR SPARES ONLY) (LH ONLY) | 1 | |
| | 69-33850-12 | . . . HINGE-HALF, TRAILING EDGE BEAM, OUTBOARD AILERON (FOR SPARES ONLY) (RH ONLY) | 1 | |
| 17A | 69-33850-10 | . . . HINGE-HALF, TRAILING EDGE BEAM, OUTBOARD AILERON (FOR SPARES ONLY) (LH ONLY) | 1 | |
| | 69-33850-9 | . . . HINGE-HALF, TRAILING EDGE BEAM, OUTBOARD AILERON (FOR SPARES ONLY) (RH ONLY) | 1 | |
| 18 | 69-33850-9 | . . . HINGE-HALF, TRAILING EDGE BEAM, OUTBOARD AILERON (FOR SPARES ONLY) (LH ONLY) | 1 | |
| | 69-33850-10 | . . . HINGE-HALF, TRAILING EDGE BEAM, OUTBOARD AILERON (FOR SPARES ONLY) (RH ONLY) | 1 | |
| 18A | 69-6177-5 | . . . RETAINER, HINGE-HALF, TRAILING EDGE BEAM, . . . . OUTBOARD AILERON (FOR SPARES ONLY) (LH ONLY) | 1 | |
| | 69-6177-6 | . . . RETAINER, HINGE-HALF, TRAILING EDGE BEAM, . . . . OUTBOARD AILERON (FOR SPARES ONLY) (RH ONLY) | 1 | |
| 19 | 69-6177-6 | . . . RETAINER, HINGE-HALF, TRAILING EDGE BEAM, . . . . OUTBOARD AILERON (FOR SPARES ONLY) (LH ONLY) | 1 | |
| | 69-6177-5 | . . . RETAINER, HINGE-HALF, TRAILING EDGE BEAM, . . . . OUTBOARD AILERON (FOR SPARES ONLY) (RH ONLY) | 1 | |
| | | (ATTACHING PARTS) | | |
| 19A | [illegible]1-3 | . . . BOLT, 100° CSK HD . . . . . | 17 | |
| 19B | BACS40[illegible]-72 | . . . SHIM, LAM, 0.062 THK (FOR SPARES ONLY) (MAKE . . FROM 9535 BACS40B 9/16 X 4 1/2 INCH) | 2 | |
| 19C | BACS40B10-57 | . . . SHIM, LAM, 0.062 THK (FOR SPARES ONLY) . . . . . | 1 | |
| 19D | AN960D10L | . . . WASHER (FOR SPARES ONLY) . . . . . | 17 | |
| 19E | BACN10P43AL | . . . WASHER, PLAIN (FOR SPARES ONLY) . . . . . | 1 | |
| 19F | NAS679A3W | . . . NUT (FOR SPARES ONLY) (FOR REPLACEMENT ORDER . . 96-02 (56878) (80539) H10-3BAC (15653) T6S1032J (71087) RMLH9075-3W (72962) (BACN10JC3)) | 17 | |
| 20 | (S)66-10402 | . . PIN ASSY, TAB HINGE, OUTBOARD AILERON . . . . . | 2 | |
| 21 | (S)NAS517-3-2 | . . SCREW (FOR REPLACEMENT ORDER BACB30LU3-2) . . . . . | 2 | |
| 22 | (S)BACW10P41AL | . . WASHER, PLAIN . . . . . | 2 | |
| 23 | (S)NAS679A3W | . . NUT (FOR REPLACEMENT ORDER 96-02 (56878) (80539) H10-3BAC (15653) T6S1032J (71087) RMLH9075-3W (72962) (BACN10JC3)) | 2 | |

| FIGURE & INDEX NO. | PART NUMBER | DESCRIPTION 1 2 3 4 5 6 7 | UNITS PER ASSY | USE ON CODE |
|---|---|---|---|---|
| 25 - | | | | |
| | (S)69-8929-1 | . . FAIRING INSTL, TAB MAST, OUTBOARD AILERON (LH ONLY) | 2 | |
| | (S)69-8929-2 | . . FAIRING INSTL, TAB MAST, OUTBOARD AILERON (RH ONLY) | 2 | |
| | 69-8929-5 | . . . FAIRING ASSY, TAB MAST, OUTBOARD AILERON (LH ONLY) | 1 | C |
| | 69-8929-6 | . . . FAIRING ASSY, TAB MAST, OUTBOARD AILERON (RH ONLY) | 1 | C |
| 23A | 69-8929-9 | . . . . COVER, ACCESS, TAB MAST FAIRING, OUTBOARD AILERON | 1 | C |
| | | (ATTACHING PARTS) | | |
| | NAS603-8P | . . . . SCREW | 2 | C |
| 23B | 69-8929-7 | . . . . FAIRING, TAB MAST, OUTBOARD AILERON (LH ONLY) | 1 | C |
| | 69-8929-8 | . . . . FAIRING, TAB MAST, OUTBOARD AILERON (RH ONLY) | 1 | C |
| 24 | 69-8929-3 | . . . FAIRING, TAB MAST, OUTBOARD AILERON (LH ONLY) | 1 | D |
| | 69-8929-4 | . . . FAIRING, TAB MAST, OUTBOARD AILERON (RH ONLY) | 1 | D |
| | (S)5-97849-1 | . . FAIRING INSTL, TAB MAST, OUTBOARD AILERON (LH ONLY) | 1 | |
| | (S)5-97849-2 | . . FAIRING INSTL, TAB MAST, OUTBOARD AILERON (RH ONLY) | 1 | |
| 25 | 5-97849-3 | . . . FAIRING, CONTROL MAST, OUTBOARD AILERON (LH ONLY) | 1 | |
| | 5-97849-4 | . . . FAIRING, CONTROL MAST, OUTBOARD AILERON (RH ONLY) | 1 | |
| | | (ATTACHING PARTS) | | |
| | NAS514P1032-12 | . . . SCREW | 5 | |
| 26 | (S)5-84190-107 | . . SEAL, MOHAIR, AILERON, OUTBOARD WING (MAKE FROM 5680 BAC1523-17N X 2.1) | 4 | |
| 27 | (S)66-14032-1 | . . SEAL ASSY, OUTBOARD AILERON (LH ONLY) | 2 | |
| | (S)66-14032-2 | . . SEAL ASSY, OUTBOARD AILERON (RH ONLY) | 2 | |
| 28 | (S)66-14032-2 | . . SEAL ASSY, OUTBOARD AILERON (LH ONLY) | 2 | |
| | (S)66-14032-1 | . . SEAL ASSY, OUTBOARD AILERON (RH ONLY) | 2 | |
| 29 | (S)60-2078-1 | . . SEAL ASSY, OUTBOARD AILERON (LH ONLY) | 2 | |
| | (S)60-2078-2 | . . SEAL ASSY, OUTBOARD AILERON (RH ONLY) | 2 | |
| 30 | (S)60-2078-2 | . . SEAL ASSY, OUTBOARD AILERON (LH ONLY) | 1 | |
| | (S)60-2078-1 | . . SEAL ASSY, OUTBOARD AILERON (RH ONLY) | 1 | |
| | | (ATTACHING PARTS) | | |
| | (S)AN3-5A | . . BOLT (FOR REPLACEMENT ORDER BAC830NE3-4) | 10 | |
| | (S)AN3-11A | . . BOLT (FOR REPLACEMENT ORDER BAC830NE3-12) | 11 | |
| | (S)BACW10P43AL | . . WASHER, PLAIN | 10 | |
| | (S)NAS620-10 | . . WASHER | 3 | |
| | (S)NAS679A3W | . . NUT (FOR REPLACEMENT ORDER 96-02 (56878) (80539) MH10-38AC (15653) T6S1032J (71087) RMLH9075-3W (72962) (BACN10JC3)) | 5 | |
| | 66-14032-7 | . . . SEAL, OUTBOARD AILERON (USED ON 66-14032-1, -2) | 1 | |
| | 60-2078-5 | . . . SEAL, OUTBOARD AILERON (MAKE FROM 8305 0.125 X 2.7 X 5.4 FELT TYPE 3 SPEC MIL-F-5656 COLOR OPT 100% NEUTRALIZED) (USED ON 60-2078-1, -2) | 1 | |
| 31 | 60-2077-7 | . . SEAL ASSY, HINGE, TYPICAL, OUTBOARD AILERON (FOR I/W INFO SEE 60-2077-11) (LH ONLY) | 4 | A |
| 31 | (S)60-2077-11 | . . SEAL ASSY, HINGE, TYPICAL, OUTBOARD AILERON (I/W 60-2077-7) (USE 60-2077-7 UNTIL EXHAUSTED) (LH ONLY) | 4 | B |
| | 60-2077-8 | . . SEAL ASSY, HINGE, TYPICAL, OUTBOARD AILERON (FOR I/W INFO SEE 60-2077-12) (RH ONLY) | 4 | A |
| | (S)60-2077-12 | . . SEAL ASSY, HINGE, TYPICAL, OUTBOARD AILERON (I/W 60-2077-8) (USE 60-2077-8 UNTIL EXHAUSTED) (RH ONLY) | 4 | B |
| 32 | 60-2077-8 | . . SEAL ASSY, HINGE, TYPICAL, OUTBOARD AILERON (FOR I/W INFO SEE 60-2077-12) (LH ONLY) | 4 | A |
| 32 | (S)60-2077-12 | . . SEAL ASSY, HINGE, TYPICAL, OUTBOARD AILERON (I/W 60-2077-8) (USE 60-2077-8 UNTIL EXHAUSTED) (LH ONLY) | 4 | B |
| | 60-2077-7 | . . SEAL ASSY, HINGE, TYPICAL, OUTBOARD AILERON (FOR I/W INFO SEE 60-2077-11) (RH ONLY) | 4 | A |
| | (S)60-2077-11 | . . SEAL ASSY, HINGE, TYPICAL, OUTBOARD AILERON (I/W 60-2077-7) (USE 60-2077-7 UNTIL EXHAUSTED) (RH ONLY) | 4 | B |
| | | (ATTACHING PARTS) | | |
| | (S)AN3-6A | . . BOLT (FOR REPLACEMENT ORDER BAC830NE3-2) | 24 | |
| | AN960D10 | . . WASHER (USED WITH 60-2077-7) | 12 | A |
| | BACW10P43AL | . . WASHER, PLAIN (USED WITH 60-2077-8) | 12 | A |
| | (S)NAS679A3W | . . NUT (FOR REPLACEMENT ORDER 96-02 (56878) (80539) MH10-38AC (15653) T6S1032J (71087) RMLH9075-3W (72962) (BACN10JC3)) | 24 | |

| FIGURE & INDEX NO. | PART NUMBER | DESCRIPTION 1 2 3 4 5 6 7 | UNITS PER ASSY | USE ON CODE |
|---|---|---|---|---|
| 25 | | | | |
| | 60-2077-5 | . . . SEAL, HINGE, TYPICAL, OUTBOARD AILERON (MAKE FROM 5680 BAC1523-13 X 5.2) (FOR I/W INFO SEE 60-2077-13) | 1 | A |
| | 60-2077-13 | . . . SEAL, HINGE, TYPICAL, OUTBOARD AILERON (MAKE FROM 5680 BAC1523-13N X 5.2) (I/W 60-2077-5) (USE 60-2077-5 UNTIL EXHAUSTED) | 1 | B |
| 33 | (S)160-1593-3000 | . . SEAL ASSY, OUTBOARD AILERON . . . . . | 3 | |
| | 60-1593-2002 | . . . SEAL, OUTBOARD AILERON (MAKE FROM 8305 0.125 X 3.7 X 3.8 FELT TYPE 3 PER MIL-F-5656 100% NEUTRALIZED) | 1 | |
| 34 | 60-1469-1 | . . SEAL ASSY, OUTBOARD AILERON (FOR I/W INFO SEE 60-1469-7) (LH ONLY) | 1 | A |
| 34 | (S)160-1469-7 | . . SEAL ASSY, OUTBOARD AILERON (I/W 60-1469-1) (USE 60-1469-1 UNTIL EXHAUSTED) (LH ONLY) | 1 | B |
| | 60-1469-2 | . . SEAL ASSY, OUTBOARD AILERON (FOR I/W INFO SEE 60-1469-8) (RH ONLY) | 1 | A |
| | (S)160-1469-8 | . . SEAL ASSY, OUTBOARD AILERON (I/W 60-1469-2) (USE 60-1469-2 UNTIL EXHAUSTED) (RH ONLY) | 1 | B |
| | | (ATTACHING PARTS) | | |
| | (S)AN3-4A | . . BOLT (FOR REPLACEMENT ORDER BACB30NE3-2) . . . . . | 2 | |
| | (S)AN960D10 | . . WASHER . . . . . | 2 | |
| | | ---------*--------- | | |
| | 60-1469-5 | . . . SEAL, OUTBOARD AILERON (MAKE FROM 5680 BAC1523-17 X 4.6) (FOR I/W INFO SEE 60-1469-6) | 1 | A |
| | 60-1469-6 | . . . SEAL, OUTBOARD AILERON (MAKE FROM 5680 BAC1523-17N X 4.6) (I/W 60-1469-5) (USE 60-1469-5 UNTIL EXHAUSTED) | 1 | B |
| 35 | (S)NAS561P4-7 | . . PIN, (FOR REPLACEMENT ORDER MS16562-32) . . . . . | 8 | |
| 36 | (S)BACP18G2-2517 | . . PIN, SEAL RET, (MAKE FROM .090 CORROSION RESISTANT STEEL WIRE) (09505) | 1 | |
| 37 | (S)BACP18G2-2A25 | . . PIN, SEAL RET, (MAKE FROM .090 CORROSION RESISTANT STEEL WIRE) (09505) | 2 | |
| 38 | (S)BACP18G2-5210 | . . PIN, SEAL RET . . . . . | 2 | |
| 39 | (S)BACP18G2-4823 | . . PIN, SEAL RET, (MAKE FROM .090 CORROSION RESISTANT STEEL WIRE) (09505) | 1 | |
| 40 | (S)BACP18G2-5460 | . . PIN, SEAL RET, (MAKE FROM .090 CORROSION RESISTANT STEEL WIRE) (09505) | 1 | |
| 41 | (S)BACP18G2-5453 | . . PIN, SEAL RET, (MAKE FROM .090 CORROSION RESISTANT STEEL WIRE) (09505) | 1 | |
| 42 | (S)60-2099 | . . SEAL, FABRIC, OUTBOARD AILERON (MAKE FROM . . . . . BMS1-17A TYPE 2 GRADE B, 8305-24.50 LG X 2.50 WIDE) | 1 | |
| 43 | (S)60-2099-1 | . . SEAL, FABRIC, OUTBOARD AILERON (MAKE FROM . . . . . BMS1-17A TYPE 2 GRADE B, 8305-48.48 LG X 2.50 WIDE) | 2 | |
| 44 | (S)60-2099-2 | . . SEAL, FABRIC, OUTBOARD AILERON (MAKE FROM . . . . . BMS1-17A TYPE 2 GRADE B, 8305-54.72 LG X 2.50 WIDE) | 1 | |
| 45 | (S)AN3-11A | . . BOLT (FOR REPLACEMENT ORDER BACB30NE3-12) . . . . . | 4 | |
| 46 | (S)BACW10P43AL | . . WASHER, PLAIN . . . . . | 4 | |
| 47 | (S)NAS679A3W | . . NUT (FOR REPLACEMENT ORDER 96-02 (56878) (80539) H10-3BAC (15653) T6S1032J (71087) RMLH9075-3W (72962) (BACN10JC3)) | 2 | |
| 48 | (S)166-3656-4 | . . RETAINER, PIN, HINGE, OUTBOARD AILERON (LH ONLY) . | 1 | |
| | (S)166-3656-3 | . . RETAINER, PIN, HINGE, OUTBOARD AILERON (RH ONLY) . | 1 | |
| 49 | (S)[illegible]-2 | . . RETAINER, PIN, HINGE, OUTBOARD AILERON (LH ONLY) . | 1 | |
| | (S)[illegible]-1 | . . RETAINER, PIN, HINGE, OUTBOARD AILERON (RH ONLY) . | 1 | |
| 50 | (S)[illegible]-1 | . . RETAINER, PIN, HINGE, OUTBOARD AILERON (LH ONLY) . | 2 | |
| | (S)[illegible]-2 | . . RETAINER, PIN, HINGE, OUTBOARD AILERON (RH ONLY) . | 2 | |
| 51 | (S)[illegible]-2 | . . RETAINER, PIN, HINGE, OUTBOARD AILERON (LH ONLY) . | 2 | |
| | (S)166-3655-1 | . . RETAINER, PIN, HINGE, OUTBOARD AILERON (RH ONLY) . | 2 | |
| 52 | (S)166-3656-1 | . . RETAINER, PIN, HINGE, OUTBOARD AILERON (LH ONLY) . | 1 | |
| | (S)166-3656-2 | . . RETAINER, PIN, HINGE, OUTBOARD AILERON (RH ONLY) . | 1 | |
| | (S)165-27063-14 | . . HINGE ASSY, OUTBOARD AILERON . . . . . | 1 | |
| | (S)165-27063-17 | . . HINGE ASSY, OUTBOARD AILERON (LH ONLY) . . . . . | 2 | |
| | (S)165-27063-18 | . . HINGE ASSY, OUTBOARD AILERON (RH ONLY) . . . . . | 2 | |
| | (S)165-27063-15 | . . HINGE ASSY, OUTBOARD AILERON (LH ONLY) . . . . . | 1 | |
| | (S)165-27063-16 | . . HINGE ASSY, OUTBOARD AILERON (RH ONLY) . . . . . | 1 | |
| | 69-1893-6 | . . . HINGE ASSY, NOSE, OUTBOARD AILERON (USED ON 65-27063-14) | 1 | |
| | 5-96763-23 | . . . HINGE ASSY, NOSE, OUTBOARD AILERON (USED ON 65-27063-17, -18) | 2 | |
| | 5-96763-19 | . . . HINGE ASSY, NOSE, OUTBOARD AILERON (USED ON 65-27063-15) | 1 | |
| | 5-96763-20 | . . . HINGE ASSY, NOSE, OUTBOARD AILERON (USED ON 65-27063-16) | 1 | |
| 53 | 69-1893-5 | . . . . PIN, HINGE, NOSE, OUTBOARD AILERON (USED ON 69-1893-6) | 1 | |

| FIGURE & INDEX NO. | PART NUMBER | DESCRIPTION 1 2 3 4 5 6 7 | UNITS PER ASSY | USE ON CODE |
|---|---|---|---|---|
| 25 - | | | | |
| 54 | 69-1893-2 | . . . . HINGE-HALF, NOSE, OUTBOARD AILERON (USED ON 69-1893-6) | 1 | |
| 55 | 69-1893-7 | . . . . HINGE-HALF, NOSE, OUTBOARD AILERON (USED ON 69-1893-6) | 1 | |
| 56 | MS20257-2-4882 | . . . . PIN (USED ON 5-96763-23) | 1 | |
| 57 | 5-96763-10 | . . . . HINGE-HALF, NOSE, OUTBOARD AILERON (USED ON 5-96763-23) | 1 | |
| 58 | 5-96763-9 | . . . . HINGE-HALF, NOSE, OUTBOARD AILERON (USED ON 5-96763-23) | 1 | |
| 59 | MS20257-2-5449 | . . . . PIN (USED ON 5-96763-19, 20) | 1 | |
| 60 | 5-96763-11 | . . . . HINGE-HALF, NOSE, OUTBOARD AILERON (USED ON 5-96763-19) | 1 | |
| | 5-96763-12 | . . . . HINGE-HALF, NOSE, OUTBOARD AILERON (USED ON 5-96763-20) | 1 | |
| 61 | 5-96763-17 | . . . . HINGE-HALF, NOSE, OUTBOARD AILERON (USED ON 5-96763-19) | 1 | |
| | 5-96763-18 | . . . . HINGE-HALF, NOSE, OUTBOARD AILERON (USED ON 5-96763-20) | 1 | |
| 62 | 90-1417-10 | . . DOOR ASSY, ACCESS, OUTBOARD AILERON (FOR I/W INFO SEE 90-1417-13) | 3 | A |
| 62 | 90-1417-13 | . . DOOR ASSY, ACCESS, OUTBOARD AILERON (I/W 90-1417-10) (USE 90-1417-10 UNTIL EXHAUSTED) | 3 | B |
| 62 | 90-1417-16 | . . DOOR ASSY, ACCESS, OUTBOARD AILERON (FOR SPARES ONLY) | 3 | |
| 63 | 90-2866-3 | . . DOOR ASSY, ACCESS, OUTBOARD AILERON | 3 | |
| 63 | 90-2866-5 | . . DOOR ASSY, ACCESS, OUTBOARD AILERON (FOR SPARES ONLY) | 3 | |
| 64 | 90-1417-1 | . . DOOR ASSY, ACCESS, OUTBOARD AILERON (LH ONLY) | 1 | |
| 64 | 90-1417-14 | . . DOOR ASSY, ACCESS, OUTBOARD AILERON (FOR SPARES ONLY) (LH ONLY) | 1 | |
| | 90-1417-2 | . . DOOR ASSY, ACCESS, OUTBOARD AILERON (RH ONLY) | 1 | |
| 64 | 90-1417-15 | . . DOOR ASSY, ACCESS, OUTBOARD AILERON (FOR SPARES ONLY) (RH ONLY) | 1 | |
| | | (ATTACHING PARTS) | | |
| | NAS517-3-2 | . . SCREW (FOR REPLACEMENT ORDER BACB30LU3-2) | 106 | |
| | | --------*-------- | | |
| 64A | 90-1417-9 | . . . SEAL, DOOR, ACCESS, OUTBOARD AILERON (MAKE FROM 5680 BAC1523-17 X 2.1) (FOR I/W INFO SEE 90-1417-12) (USED ON 90-1417-10) | 1 | A |
| 64A | 90-1417-12 | . . . SEAL, MOHAIR, DOOR, ACCESS, OUTBOARD AILERON (MAKE FROM 5680 BAC1523-17N X 2.1) (I/W 90-1417-9) (USE 90-1417-9 UNTIL EXHAUSTED) (USED ON 90-1417-13, -16) | 1 | B |
| 64B | 5-88190-73 | . . SKIN, AILERON, OUTBOARD WING, UPPER (MAKE FROM ALUM 2024-T6) | 1 | |
| 64B | 5-88190-3095 | . . SKIN, AILERON, OUTBOARD WING, UPPER (FOR SPARES ONLY) | 1 | |
| 64C | 5-88190-55 | . . SKIN, AILERON, OUTBOARD WING, UPPER (ALTERED FROM 5-88190-62) (MAKE FROM ALUM 2024-T6) (FOR REPLACEMENT ORDER 65-17640-105) (LH ONLY) | 1 | |
| 64C | 5-88190-3077 | . . SKIN, AILERON, OUTBOARD WING, UPPER (FOR SPARES ONLY) (LH ONLY) | 1 | |
| | 5-88190-56 | . . SKIN, AILERON, OUTBOARD WING, UPPER (ALTERED FROM 5-88190-62) (MAKE FROM ALUM 2024-T6) (RH ONLY) | 1 | |
| | 5-88190-3078 | . . SKIN, AILERON, OUTBOARD WING, UPPER (FOR SPARES ONLY) (RH ONLY) | 1 | |
| 64D | 5-88190-61 | . . SKIN, AILERON, OUTBOARD WING, UPPER (ALTERED FROM 5-88190-62) (MAKE FROM ALUM 2024-T6) (FOR REPLACEMENT ORDER 65-17640-107) (LH ONLY) | 1 | |
| 64D | 5-88190-3079 | . . SKIN, AILERON, OUTBOARD WING, UPPER (FOR SPARES ONLY) (LH ONLY) | 1 | |
| | 5-88190-62 | . . SKIN, AILERON, OUTBOARD WING, UPPER (MAKE FROM ALUM 2024-T6) (RH ONLY) | 1 | |
| | 5-88190-3080 | . . SKIN, AILERON, OUTBOARD WING, UPPER (FOR SPARES ONLY) (RH ONLY) | 1 | |
| 64E | 5-88190-71 | . . SKIN, AILERON, OUTBOARD WING, LOWER (ALTERED FROM 5-88190-72) (LH ONLY) | 1 | |
| 64E | 5-88190-3093 | . . SKIN, AILERON, OUTBOARD WING, LOWER (FOR SPARES ONLY) (LH ONLY) | 1 | |
| | 5-88190-72 | . . SKIN, AILERON, OUTBOARD WING, LOWER (RH ONLY) | 1 | |
| | 5-88190-3094 | . . SKIN, AILERON OUTBOARD WING, LOWER (FOR SPARES ONLY) (RH ONLY) | 1 | |
| 64F | 5-88190-69 | . . SKIN, AILERON, OUTBOARD WING, LOWER (ALTERED FROM 5-88190-72) (MAKE FROM ALUM 2024-T6) (LH ONLY) | 1 | |
| 64F | 5-88190-3091 | . . SKIN, AILERON, OUTBOARD WING, LOWER (FOR SPARES ONLY) (LH ONLY) | 1 | |
| | 5-88190-70 | . . SKIN, AILERON, OUTBOARD WING, LOWER (ALTERED FROM 5-88190-72) (MAKE FROM ALUM 2024-T6) (RH ONLY) | 1 | |

| FIGURE & INDEX NO. | PART NUMBER | DESCRIPTION 1 2 3 4 5 6 7 | UNI PE ASS |
|---|---|---|---|
| 25 - | | | |
| | 5-88190-3092 | . . SKIN, AILERON, OUTBOARD WING, LOWER (FOR . . . . . SPARES ONLY) (RH ONLY) | |
| 66G | 5-88190-67 | . . SKIN, AILERON, OUTBOARD WING, LOWER . . . . . | |
| 66G | 5-88190-3085 | . . SKIN, AILERON, OUTBOARD WING, LOWER (FOR . . . . . SPARES ONLY) | |
| 66H | 5-88190-57 | . . SKIN, NOSE, INBOARD AILERON, OUTBOARD WING (ALTERED FROM 5-88190-54) (MAKE FROM ALUM 2024-T6) (LH ONLY) | 1 |
| 66H | 5-88190-3087 | . . SKIN, NOSE, INBOARD AILERON, OUTBOARD WING (FOR . . SPARES ONLY) (LH ONLY) | 1 |
| | 5-88190-58 | . . SKIN, NOSE, INBOARD AILERON, OUTBOARD WING (ALTERED FROM 5-88190-54) (MAKE FROM ALUM 2024-T6) (RH ONLY) | 1 |
| | 5-88190-3088 | . . SKIN, NOSE, INBOARD AILERON, OUTBOARD WING (FOR . . SPARES ONLY) (RH ONLY) | 1 |
| 66J | 5-88190-59 | . . SKIN, NOSE, AILERON, OUTBOARD WING (ALTERED FROM . 5-88190-54) (MAKE FROM ALUM 2024-6L) (LH ONLY) | 1 |
| 66J | 5-88190-3089 | . . SKIN, NOSE, AILERON, OUTBOARD WING (FOR . . . . . SPARES ONLY) (LH ONLY) | 1 |
| | 5-88190-60 | . . SKIN, NOSE, AILERON, OUTBOARD WING (ALTERED FROM . 5-88190-54) (MAKE FROM ALUM 2024-T6) (RH ONLY) | 1 |
| | 5-88190-3090 | . . SKIN, NOSE, AILERON, OUTBOARD WING (FOR . . . . . SPARES ONLY) (RH ONLY) | 1 |
| 66K | 5-88190-49 | . . SKIN, NOSE, AILERON, OUTBOARD WING (ALTERED FROM . 5-88190-54) (MAKE FROM ALUM 2024-T6) (LH ONLY) | 1 |
| 66K | 5-88190-3071 | . . SKIN, NOSE, AILERON, OUTBOARD WING (FOR . . . . . SPARES ONLY) (LH ONLY) | 1 |
| | 5-88190-50 | . . SKIN, NOSE, AILERON, OUTBOARD WING (ALTERED FROM . 5-88190-54) (MAKE FROM ALUM 2024-T6) (RH ONLY) | 1 |
| | 5-88190-3072 | . . SKIN, NOSE, AILERON, OUTBOARD WING (FOR . . . . . SPARES ONLY) (RH ONLY) | 1 |
| 66L | DELETED | | |
| 66M | 5-88190-51 | . . SKIN, NOSE AILERON, OUTBOARD WING (ALTERED FROM . . 5-88190-54) (MAKE FROM ALUM 2024-T6) (LH ONLY) | 1 |
| 66M | 5-88190-3073 | . . SKIN, NOSE, AILERON, OUTBOARD WING (FOR . . . . . SPARES ONLY) (LH ONLY) | 1 |
| | 5-88190-52 | . . SKIN, NOSE, AILERON, OUTBOARD WING (ALTERED FROM . 5-88190-54) (MAKE FROM ALUM 2024-T6) (RH ONLY) | 1 |
| | 5-88190-3074 | . . SKIN, NOSE, AILERON, OUTBOARD WING (FOR . . . . . SPARES ONLY) (RH ONLY) | 1 |
| 66N | 5-88190-53 | . . SKIN, NOSE, AILERON, OUTBOARD WING (ALTERED FROM . 5-88190-54) (MAKE FROM ALUM 2024-T6) (LH ONLY) | 1 |
| 66N | 5-88190-3075 | . . SKIN, NOSE, AILERON, OUTBOARD WING (FOR . . . . . SPARES ONLY) (LH ONLY) | 1 |
| | 5-88190-54 | . . SKIN, NOSE, AILERON, OUTBOARD WING (MAKE FROM . . . ALUM 2024-T6) (RH ONLY) | 1 |
| | 5-88190-3076 | . . SKIN, NOSE, AILERON, OUTBOARD WING (FOR . . . . . SPARES ONLY) (RH ONLY) | 1 |
| 65 | (S)5-88190-1651 | . . SHIM, AILERON, OUTBOARD WING . . . . . | 4 |
| 66 | (S)6-84526 | . . STOP, OUTBOARD AILERON . . . . . | 1 |
| 67 | (S)6-84526-2 | . . STOP ASSY, OUTBOARD AILERON . . . . . (ATTACHING PARTS) | 1 |
| | (S)NAS464P5A15 | . . BOLT (FOR REPLACEMENT ORDER NAS1105-15) . . . . . | 2 |
| | (S)NAS464P5A16 | . . BOLT (FOR REPLACEMENT ORDER NAS1105-16) . . . . . | 2 |
| | (S)AN960D516 | . . WASHER . . . . . | 4 |
| | [illegible]S679A5W | . . NUT (FOR REPLACEMENT ORDER 96-054 (56878) (80539) . H10-5BAC (15653) T6S524J (71087) RMLH9075-5W (72962) (BACN10JC5)) | 4 |
| | [illegible]-83219-2 | . . SUPPORT ASSY, BEARING, HINGE, OUTBOARD AILERON . . (ATTACHING PARTS) | 7 |
| 68 | (S)NAS1104-35W | . . BOLT (FOR REPLACEMENT ORDER NAS1104-35) . . . . . | 10 |
| 69 | (S)NAS1104-41W | . . BOLT (FOR REPLACEMENT ORDER NAS1104-41) . . . . . | 2 |
| 70 | (S)NAS1104-61W | . . BOLT (FOR REPLACEMENT ORDER NAS1104-61) . . . . . | 2 |
| 71 | (S)AN960D416 | . . WASHER . . . . . | 16 |
| 72 | (S)NAS679A4W | . . NUT (FOR REPLACEMENT ORDER 96-048 (56878) (80539) . H10-4BAC (15653) T6S428J (71087) RMLH9075-4W (72962) (BACN10JC4)) | 14 |
| 73 | NAS516-1 | . . . FITTING . . . . . | 1 |
| 74 | BRS | . . . BEARING, CONCAVE, ROLLER, SELF-ALIGNING (77896) . (BACB10C135) | 1 |
| 75 | 6-83219-3 | . . . SUPPORT, BEARING, HINGE, OUTBOARD AILERON . . . . | 1 |
| | (S)9-64578-41 | . . SPAR INSTL, OUTBOARD AILERON (LH ONLY) . . . . . | 1 |
| | (S)9-64578-42 | . . SPAR INSTL, OUTBOARD AILERON (RH ONLY) . . . . . | 1 |

| FIGURE & INDEX NO. | PART NUMBER | DESCRIPTION 1 2 3 4 5 6 7 | UNITS PER ASSY | USE ON CODE |
|---|---|---|---|---|
| 25 - | | | | |
| 75A | 5-96181 | . . . SUPPORT, HINGE, OUTBOARD AILERON, WING STATION 949.174 | 1 | |
| | (S)6-83592-4 | . . SUPPORT ASSY, BEARING, OUTBOARD AILERON, WING STATION 779.96 (ATTACHING PARTS) | 1 | |
| 76 | (S)NAS1104-33W | . . BOLT (FOR REPLACEMENT ORDER NAS1104-33) | 1 | |
| 77 | (S)NAS1104-35W | . . BOLT (FOR REPLACEMENT ORDER NAS1104-35) | 1 | |
| 78 | (S)AN960D416 | . . WASHER | 2 | |
| 79 | (S)NAS679A4W | . . NUT (FOR REPLACEMENT ORDER 96-048 (56878) (80539) MS10-48AC (15653) T6S428J (71087) RMLH9075-4W (72962) (BACN10JC4)) | 2 | |
| 80 | NAS516-1 | . . . FITTING | 1 | |
| 81 | BR5 | . . . BEARING, CONCAVE, ROLLER, SELF-ALIGNING (77896) (PA1110L55) | 1 | |
| 82 | 6-83592-3 | . . . SUPPORT, BEARING, OUTBOARD AILERON, WING STATION 779.96 | 1 | |
| 83 | DELETED | | | |
| 84 | 69-1898-1 | . . DOOR ASSY, ACCESS, OUTBOARD AILERON (FOR I/W INFO SEE 69-1898-11) (LH ONLY) | 1 | |
| 84 | 69-1898-11 | . . DOOR ASSY, ACCESS, OUTBOARD AILERON (I/W 69-1898-1) (USE 69-1898-1 UNTIL EXHAUSTED) (LH ONLY) | 1 | |
| 84 | 69-1898-14 | . . DOOR ASSY, ACCESS, OUTBOARD AILERON (FOR SPARES ONLY) (LH ONLY) | 1 | |
| | 69-1898-2 | . . DOOR ASSY, ACCESS, OUTBOARD AILERON (FOR I/W INFO SEE 69-1898-12) (RH ONLY) | 1 | |
| | 69-1898-12 | . . DOOR ASSY, ACCESS, OUTBOARD AILERON (I/W 69-1898-2) (USE 69-1898-2 UNTIL EXHAUSTED) (RH ONLY) | 1 | |
| | 69-1898-15 | . . DOOR ASSY, ACCESS, OUTBOARD AILERON (FOR SPARES ONLY) (RH ONLY) (ATTACHING PARTS) | 1 | |
| | (S)NAS517-3-2 | . . SCREW (FOR REPLACEMENT ORDER BACB30LU3-2) | 16 | |
| 85 | 69-1898-6 | . . . SEAL, DOOR, ACCESS, OUTBOARD AILERON (MAKE FROM 5680 BAC1523-17 X 2.1) | 1 | |
| 85 | (S)69-1898-13 | . . . SEAL, MOHAIR, ACCESS DOOR, OUTBOARD AILERON (MAKE FROM 5680 BAC1523-17H X 2.1) | 1 | |
| 86 | (S)50-2477-17 | . . WEIGHT, BALANCE, NOSE, OUTBOARD AILERON (MAKE FROM ANTIMONY LEAD L16.44 X 1.06 X 8.57) | 14 | |
| 87 | (S)50-2477-18 | . . WEIGHT, BALANCE, NOSE, OUTBOARD AILERON (MAKE FROM ANTIMONY LEAD L16.44 X 1.06 X 7.02) | 2 | |
| 88 | (S)50-2477-19 | . . WEIGHT, BALANCE, NOSE, OUTBOARD AILERON (MAKE FROM ANTIMONY LEAD L16.44 X 1.06 X 8.04) | 1 | |
| 89 | (S)50-2477-20 | . . WEIGHT, BALANCE, NOSE, OUTBOARD AILERON (MAKE FROM ANTIMONY LEAD L16.44 X 1.06 X 8.81) | 1 | |
| 90 | (S)50-2477-21 | . . WEIGHT, BALANCE, NOSE, OUTBOARD AILERON (MAKE FROM ANTIMONY LEAD L16.44 X 1.06 X 8.21) | 1 | |
| 91 | (S)65-2312-5 | . . WEIGHT, BALANCE, NOSE, OUTBOARD AILERON (MAKE FROM ANTIMONY LEAD L16.47 X 1.49 X 7.94) | 1 | |
| 92 | (S)65-2312-6 | . . WEIGHT, BALANCE, NOSE, OUTBOARD AILERON (MAKE FROM ANTIMONY LEAD L16.46 X 1.46 X 8.06) | 1 | |
| 93 | (S)65-2312-7 | . . WEIGHT, BALANCE, NOSE, OUTBOARD AILERON (MAKE FROM ANTIMONY LEAD L16.48 X 1.21 X 7.50) | 1 | |
| 94 | (S)65-2312-8 | . . WEIGHT, BALANCE, NOSE, OUTBOARD AILERON (MAKE FROM ANTIMONY LEAD L16.48 X 1.23 X 7.42) | 1 | |
| 94A | (S)66-9900-1 | . . WEIGHT, BALANCE, NOSE, OUTBOARD AILERON (MAKE FROM ANTIMONY LEAD L16.048 X 1.2 X 5.60) | AR | |
| 94B | (S)66-9900 | . . WEIGHT, BALANCE, NOSE, OUTBOARD AILERON (MAKE FROM ANTIMONY LEAD L16.048 X 1.2 X 6.60) | AR | |
| 95 | (S)65-8405-1 | . . RIB INSTL, OUTBOARD AILERON, WING STATION 950.734 (LH ONLY) (FOR BREAKDOWN SEE FIG. 30) | 1 | |
| | (S)65-8405-2 | . . RIB INSTL, OUTBOARD AILERON, WING STATION 950.734 (RH ONLY) (FOR BREAKDOWN SEE FIG. 30) | 1 | |
| 96 | (S)69-5650-3 | . . RIB INSTL, OUTBOARD AILERON (STATION 930.24, 910.22, 890.21, 871.72, 853.23) (LH ONLY) (FOR BREAKDOWN SEE FIG. 31) | 5 | |
| | (S)69-5650-4 | . . RIB INSTL, OUTBOARD AILERON (STATION 930.24, 910.22, 890.21, 871.72, 853.23) (RH ONLY) (FOR BREAKDOWN SEE FIG. 31) | 5 | |
| 97 | (S)9-64574-9 | . . RIB INSTL, OUTBOARD AILERON, WING STATION 835.10 (LH ONLY) (FOR BREAKDOWN SEE FIG. 32) | 1 | |
| | (S)9-64574-10 | . . RIB INSTL, OUTBOARD AILERON, WING STATION 835.10 (RH ONLY) (FOR BREAKDOWN SEE FIG. 32) | 1 | |

| FIGURE & INDEX NO. | PART NUMBER | DESCRIPTION 1 2 3 4 5 6 7 | UNITS PER ASSY | USE ON COD |
|---|---|---|---|---|
| 25 - | | | | |
| 98 | (S)69-5650-21 | . . RIB INSTL, OUTBOARD AILERON (STATION 816.68) (LH ONLY) (FOR BREAKDOWN SEE FIG. 31) | 1 | |
| | (S)69-5650-22 | . . RIB INSTL, OUTBOARD AILERON (STATION 816.68) (RH ONLY) (FOR BREAKDOWN SEE FIG. 31) | 1 | |
| 99 | (S)69-5652-1 | . . RIB INSTL, OUTBOARD AILERON (STATION 799.00, 766.18) (LH ONLY) (FOR BREAKDOWN SEE FIG. 31) | 2 | |
| | (S)69-5652-2 | . . RIB INSTL, OUTBOARD AILERON (STATION 799.00, 766.18) (RH ONLY) (FOR BREAKDOWN SEE FIG. 31) | 2 | |
| 100 | DELETED | | | |
| 101 | (S)69-5652-1 | . . RIB INSTL, OUTBOARD AILERON (STATION 780.96) (LH ONLY) (FOR BREAKDOWN SEE FIG. 31) | 1 | |
| | (S)69-5652-2 | . . RIB INSTL, OUTBOARD AILERON (STATION 780.96) (RH ONLY) (FOR BREAKDOWN SEE FIG. 31) | 1 | |
| 102 | (S)69-5652-2 | . . RIB INSTL, OUTBOARD AILERON (STATION 778.96) (LH ONLY) (FOR BREAKDOWN SEE FIG. 31) | 1 | |
| | (S)69-5652-1 | . . RIB INSTL, OUTBOARD AILERON (STATION 778.96) (RH ONLY) (FOR BREAKDOWN SEE FIG. 31) | 1 | |
| 103 | (S)69-5650-3 | . . RIB INSTL, OUTBOARD AILERON (STATION 753.40) (LH ONLY) (FOR BREAKDOWN SEE FIG. 31) | 1 | |
| | (S)69-5650-4 | . . RIB INSTL, OUTBOARD AILERON (STATION 753.40) (RH ONLY) (FOR BREAKDOWN SEE FIG. 31) | 1 | |
| 104 | (S)69-5650-4 | . . RIB INSTL, OUTBOARD AILERON (STATION 751.40) (LH ONLY) (FOR BREAKDOWN SEE FIG. 31) | 1 | |
| | (S)69-5650-3 | . . RIB INSTL, OUTBOARD AILERON (STATION 751.40) (RH ONLY) (FOR BREAKDOWN SEE FIG. 31) | 1 | |
| 105 | DELETED | | | |
| 106 | (S)9-64571-5 | . . RIB INSTL, OUTBOARD AILERON, WING STATION 732.60 (LH ONLY) (FOR BREAKDOWN SEE FIG. 33) | 1 | |
| | (S)9-64571-6 | . . RIB INSTL, OUTBOARD AILERON, WING STATION 732.60 (RH ONLY) (FOR BREAKDOWN SEE FIG. 33) | 1 | |
| 107 | (S)9-64570-11 | . . RIB INSTL, OUTBOARD AILERON, WING STATION 729.00 (LH ONLY) (FOR BREAKDOWN SEE FIG. 34) | 1 | |
| | (S)9-64570-12 | . . RIB INSTL, OUTBOARD AILERON, WING STATION 729.00 (RH ONLY) (FOR BREAKDOWN SEE FIG. 34) | 1 | |
| 108 | (S)69-5650-1 | . . RIB INSTL, OUTBOARD AILERON, WING STATION 718.887 (LH ONLY) (FOR BREAKDOWN SEE FIG. 31) | 1 | |
| | (S)69-5650-2 | . . RIB INSTL, OUTBOARD AILERON, WING STATION 718.887 (RH ONLY) (FOR BREAKDOWN SEE FIG. 31) | 1 | |
| 109 | (S)9-67025-17 | . . WEB, NOSE RIB, OUTBOARD AILERON (LH ONLY) | 1 | |
| | (S)9-67025-18 | . . WEB, NOSE RIB, OUTBOARD AILERON (RH ONLY) | 1 | |
| 110 | (S)9-67025-1 | . . WEB, NOSE RIB, OUTBOARD AILERON (LH ONLY) | 1 | |
| | (S)9-67025-2 | . . WEB, NOSE RIB, OUTBOARD AILERON (RH ONLY) | 1 | |
| 111 | (S)9-67066-1 | . . RIB, NOSE, OUTBOARD AILERON (LH ONLY) | 1 | |
| | (S)9-67066-2 | . . RIB, NOSE, OUTBOARD AILERON (RH ONLY) | 1 | |
| 112 | (S)9-67025-1651 | . . WEB, NOSE RIB, OUTBOARD AILERON (LH ONLY) | 7 | |
| | (S)9-67025-1652 | . . WEB, NOSE RIB, OUTBOARD AILERON (RH ONLY) | 7 | |
| 113 | (S)9-67066-3 | . . RIB, NOSE, OUTBOARD AILERON (LH ONLY) | 7 | |
| | (S)9-67066-4 | . . RIB, NOSE, OUTBOARD AILERON (RH ONLY) | 7 | |
| 114 | (S)9-67025-1652 | . . WEB, NOSE RIB, OUTBOARD AILERON (LH ONLY) | 6 | |
| | (S)9-67025-1651 | . . WEB, NOSE RIB, OUTBOARD AILERON (RH ONLY) | 6 | |
| 115 | (S)9-67066-4 | . . RIB, NOSE, OUTBOARD AILERON (LH ONLY) | 6 | |
| | (S)9-67066-3 | . . RIB, NOSE, OUTBOARD AILERON (RH ONLY) | 6 | |
| 116 | (S)9-67025-7 | . . WEB, NOSE RIB, OUTBOARD AILERON (LH ONLY) | 3 | |
| | (S)9-67025-8 | . . WEB, NOSE RIB, OUTBOARD AILERON (RH ONLY) | 3 | |
| 117 | (S)9-67066-13 | . . RIB, NOSE, OUTBOARD AILERON (LH ONLY) | 3 | |
| | (S)9-67066-14 | . . RIB, NOSE, OUTBOARD AILERON (RH ONLY) | 3 | |
| 118 | (S)9-67025-8 | . . WEB, NOSE RIB, OUTBOARD AILERON (LH ONLY) | 3 | |
| | (S)9-67025-7 | . . WEB, NOSE RIB, OUTBOARD AILERON (RH ONLY) | 3 | |
| 119 | (S)9-67066-14 | . . RIB, NOSE, OUTBOARD AILERON (LH ONLY) | 3 | |
| | (S)9-67066-13 | . . RIB, NOSE, OUTBOARD AILERON (RH ONLY) | 3 | |
| 120 | (S)9-67025-5 | . . WEB, NOSE RIB, OUTBOARD AILERON (LH ONLY) | 2 | |
| | (S)9-67025-6 | . . WEB, NOSE RIB, OUTBOARD AILERON (RH ONLY) | 2 | |
| 121 | (S)9-67066-5 | . . RIB, NOSE, OUTBOARD AILERON (LH ONLY) | 2 | |
| | (S)9-67066-6 | . . RIB, NOSE, OUTBOARD AILERON (RH ONLY) | 2 | |
| 122 | (S)9-67025-6 | . . WEB, NOSE RIB, OUTBOARD AILERON (LH ONLY) | 2 | |
| | (S)9-67025-5 | . . WEB, NOSE RIB, OUTBOARD AILERON (RH ONLY) | 2 | |
| 123 | (S)9-67066-6 | . . RIB, NOSE, OUTBOARD AILERON (LH ONLY) | 2 | |
| | (S)9-67066-5 | . . RIB, NOSE, OUTBOARD AILERON (RH ONLY) | 2 | |
| 124 | (S)9-67025-21 | . . WEB, NOSE RIB, OUTBOARD AILERON (LH ONLY) | 1 | |
| | (S)9-67025-22 | . . WEB, NOSE RIB, OUTBOARD AILERON (RH ONLY) | 1 | |
| 125 | (S)9-67066-21 | . . RIB, NOSE, OUTBOARD AILERON (LH ONLY) | 1 | |
| | (S)9-67066-22 | . . RIB, NOSE, OUTBOARD AILERON (RH ONLY) | 1 | |
| 126 | (S)9-67025-22 | . . WEB, NOSE RIB, OUTBOARD AILERON (LH ONLY) | 1 | |

| FIGURE & INDEX NO. | PART NUMBER | DESCRIPTION 1 2 3 4 5 6 7 | UNITS PER ASSY | USE ON CODE |
|---|---|---|---|---|
| 25 - | | | | |
| | (S)9-67025-21 | . . WEB, NOSE RIB, OUTBOARD AILERON (RH ONLY) . . . . . | 1 | |
| 127 | (S)9-67066-22 | . . RIB, NOSE, OUTBOARD AILERON (LH ONLY) . . . . . | 1 | |
| | (S)9-67066-21 | . . RIB, NOSE, OUTBOARD AILERON (LH ONLY) . . . . . | 1 | |
| 128 | (S)9-67025-19 | . . WEB, NOSE RIB, OUTBOARD AILERON (LH ONLY) . . . . . | 1 | |
| | (S)9-67025-20 | . . WEB, NOSE RIB, OUTBOARD AILERON (RH ONLY) . . . . . | 1 | |
| 129 | (S)9-67066-3 | . . RIB, NOSE, OUTBOARD AILERON (LH ONLY) . . . . . | 1 | |
| | (S)9-67066-4 | . . RIB, NOSE, OUTBOARD AILERON (RH ONLY) . . . . . | 1 | |
| 130 | (S)9-67025-19 | . . WEB, NOSE RIB, OUTBOARD AILERON (LH ONLY) . . . . . | 1 | |
| | (S)9-67025-20 | . . WEB, NOSE RIB, OUTBOARD AILERON (RH ONLY) . . . . . | 1 | |
| 131 | DELETED | | | |
| 132 | (S)9-67066-15 | . . RIB, NOSE, OUTBOARD AILERON (LH ONLY) . . . . . | 1 | |
| | (S)9-67066-16 | . . RIB, NOSE, OUTBOARD AILERON (RH ONLY) . . . . . | 1 | |
| 133 | DELETED | | | |
| 134 | DELETED | | | |
| 135 | (S)9-67025-19 | . . WEB, NOSE RIB, OUTBOARD AILERON (LH ONLY) . . . . . | 1 | |
| | (S)9-67025-20 | . . WEB, NOSE RIB, OUTBOARD AILERON (RH ONLY) . . . . . | 1 | |
| 136 | (S)9-67066-17 | . . RIB, NOSE, OUTBOARD AILERON (LH ONLY) . . . . . | 1 | |
| | (S)9-67066-18 | . . RIB, NOSE, OUTBOARD AILERON (RH ONLY) . . . . . | 1 | |
| 137 | (S)9-67025-11 | . . WEB, NOSE RIB, OUTBOARD AILERON (LH ONLY) . . . . . | 1 | |
| | (S)9-67025-12 | . . WEB, NOSE RIB, OUTBOARD AILERON (RH ONLY) . . . . . | 1 | |
| 138 | (S)9-67066-19 | . . RIB, NOSE, OUTBOARD AILERON (LH ONLY) . . . . . | 1 | |
| | (S)9-67066-20 | . . RIB, NOSE, OUTBOARD AILERON (RH ONLY) . . . . . | 1 | |
| 139 | (S)9-67025-13 | . . WEB, NOSE RIB, OUTBOARD AILERON (LH ONLY) . . . . . | 1 | |
| | (S)9-67025-14 | . . WEB, NOSE RIB, OUTBOARD AILERON (RH ONLY) . . . . . | 1 | |
| 140 | (S)66-5296-1 | . . WEB, NOSE RIB, OUTBOARD AILERON (LH ONLY) . . . . . | 1 | |
| | (S)66-5296-2 | . . WEB, NOSE RIB, OUTBOARD AILERON (RH ONLY) . . . . . | 1 | |
| | 9-64026-83 | . TAB ASSY, HONEYCOMB, OUTBOARD AILERON (LH ONLY) . . . | 1 | |
| | 9-64026-1001 | . TAB ASSY, HONEYCOMB, OUTBOARD AILERON (FOR SPARES . . ONLY) (CONSISTS OF PARTS DENOTED BY (S)) (LH ONLY) | REF | |
| | 9-64026-84 | . TAB ASSY, HONEYCOMB, OUTBOARD AILERON (RH ONLY) . . . | 1 | |
| | 9-64026-1002 | . TAB ASSY, HONEYCOMB, OUTBOARD AILERON (FOR SPARES . . ONLY) (CONSISTS OF PARTS DENOTED BY (S)) (RH ONLY) | REF | |
| 141 | (S)740K5A5A6 | . . JUMPER, BOND., IRRADIATED, POLYOLEFIN, INSULATED . (91812) (BACJ40K5A5A6) (ATTACHING PARTS) | 2 | |
| 141A | (S)NAS517-3-2 | . . SCREW (FOR REPLACEMENT ORDER BACB30LU3-2) . . . . . | 2 | |
| 141B | 9-64026-49 | . . FILLER, HONEYCOMB TAB, OUTBOARD AILERON (FOR . . . SPARES ONLY) | 2 | |
| 141C | NAS679A3W | . . NUT (FOR SPARES ONLY) (FOR REPLACEMENT ORDER 96-02 (56878) (80539) H10-3BAC (15653) T6S1032J (71087) RMLH9075-3W (72962) (BACN10JC3)) | 2 | |
| 142 | (S)60-3722-1 | . . FAIRING, TAB MAST, OUTBOARD AILERON (LH ONLY) . . . | 2 | |
| | (S)60-3722-2 | . . FAIRING, TAB MAST, OUTBOARD AILERON (RH ONLY) . . . | 2 | |
| 142A | (S)AN7510F1 | . . PLATE, IDENTIFICATION (ALTERNATE BACN12M30-1CD) . . | 1 | |
| 142A | BACN12M30-1CD | . . NAMEPLATE (ALTERNATE TO AN7510F1) (FOR SPARES ONLY) | 1 | |
| 143 | 66-8420-3001 | . . WEIGHT ASSY, BALANCE, TAB, OUTBOARD AILERON (FOR . SPARES ONLY) | AR | |
| | 9-64026-81 | . . CORE ASSY, HONEYCOMB, TAB, OUTBOARD AILERON . . . . (LH ONLY) | 1 | |
| | 9-64026-92 | . . CORE ASSY, HONEYCOMB, TAB, OUTBOARD AILERON . . . . (RH ONLY) | 1 | |
| | 9-64026-87 | . . . SPAR ASSY, TAB CORE, HONEYCOMB, OUTBOARD AILERON (LH ONLY) | 1 | |
| | 9-64026-88 | . . . SPAR ASSY, TAB CORE, HONEYCOMB, OUTBOARD AILERON (RH ONLY) | 1 | |
| 144 | 9-64026-85 | . . . . HINGE-HALF, SPAR, TAB CORE, HONEYCOMB, OUTBOARD AILERON (LH ONLY) | 1 | |
| | 9-64026-86 | . . . . HINGE-HALF, SPAR, TAB CORE, HONEYCOMB, OUTBOARD AILERON (RH ONLY) | 1 | |
| 145 | NAS1223-3L | . . BOLT (FOR REPLACEMENT ORDER BACB30NE3LN1) . . . . . (FOR SPARES ONLY) | 24 | |
| 146 | 69-33855-1 | . . RETAINER, BOLT, TAB, OUTBOARD AILERON (FOR SPARES . ONLY) | 12 | |
| 147 | BACS40A10-64 | . . SHIM, LAM, 0.030 THK (FOR SPARES ONLY) (MAKE FROM . BAC1534-62, 5/8" x 4") | 4 | |
| 147 | BACS40A10-64 | . . SHIM, LAM, 0.030 THK (FOR SPARES ONLY) . . . . . | 4 | |
| 148 | 69-33849-1 | . . HINGE-HALF, TAB, OUTBOARD AILERON (FOR SPARES ONLY) (LH ONLY) | 1 | |
| | 69-33849-2 | . . HINGE-HALF, TAB, OUTBOARD AILERON (FOR SPARES ONLY) (RH ONLY) | 1 | |
| 149 | 69-33849-2 | . . HINGE-HALF, TAB, OUTBOARD AILERON (FOR SPARES ONLY) (LH ONLY) | 1 | |

| FIGURE & INDEX NO. | PART NUMBER | DESCRIPTION 1 2 3 4 5 6 7 | UNITS PER ASSY | USE ON CODE |
|---|---|---|---|---|
| 25 - | | | | |
| | 69-33849-1 | . . HINGE-HALF, TAB, OUTBOARD AILERON (FOR SPARES ONLY) (RH ONLY) | 1 | |
| 150 | 69-33849-3 | . . HINGE-HALF, TAB, OUTBOARD AILERON (FOR SPARES ONLY) | 4 | |
| | 9-64026-1009 | . . CORE ASSY, HONEYCOMB, TAB, OUTBOARD AILERON (FOR SPARES ONLY) (LH ONLY) | 1 | |
| | 9-64026-1010 | . . CORE ASSY, HONEYCOMB, TAB, OUTBOARD AILERON (FOR SPARES ONLY) (RH ONLY) | 1 | |
| | 9-64026-1005 | . . . SPAR ASSY, TAB CORE, HONEYCOMB, OUTBOARD AILERON (FOR SPARES ONLY) (LH ONLY) | 1 | |
| | 9-64026-1006 | . . . SPAR ASSY, TAB CORE, HONEYCOMB, OUTBOARD AILERON (FOR SPARES ONLY) (RH ONLY) | 1 | |
| 151 | 9-64026-1003 | . . . . HINGE-HALF, SPAR, TAB CORE, HONEYCOMB, OUTBOARD AILERON (FOR SPARES ONLY) (LH ONLY) | 1 | |
| | 9-64026-1004 | . . . . HINGE-HALF, SPAR, TAB CORE, HONEYCOMB, OUTBOARD AILERON (FOR SPARES ONLY) (RH ONLY) | 1 | |
| 152 | BACS40A10-72 | . . . . SHIM, LAM, 0.030 THK (FOR SPARES ONLY)(MAKE FROM BAC1534-62, 5/8" x 4 1/2") | 2 | |
| | | A 3001 THRU 3001<br>B 2201 THRU 2299, 3002 THRU 3099<br>C 2201 THRU 2299<br>D 3001 THRU 3099 | | |

## FLOW PROCESS CHART

SUBJECT: Aileron Assy Outboard KC-135 DATE: 4/5/89

PCN: 15250A WCD: 15249A WCDDATE: 88055

CHART BEGINS: 15249A PAGE 1 of 1

CHART ENDS: PREPARED BY: LARRY

| WCD OP # | SYMBOLS | DESCRIPTION |
|---|---|---|
| 010 | ● ◇ D □ ▽ | Receive / Uncrate 2122 MAPCA |
| | ◆ ● | Delay Move to paint Delay |
| 020 | ● ◇ D □ ▽ | Strip Paint 2122 MAPCA |
| | ○ ◇ ● □ ▽ | Delay |
| 030 | ● ◇ D □ ▽ | Treat for Corrosion 2122 MAPCA |
| | ○ ◇ ● □ ▽ | Delay |
| | ○ ● D □ ▽ | Move To 95 |
| | ○ ◇ ● □ ▽ | Delay |
| 040 | ● ◇ D □ ▽ | Remove Access Panels 95 MAPAB |
| 050 | ● ◇ D □ ▽ | Remove Skin Panels |
| 055 | ● ◇ D □ ▽ | Accomplish Shakedown Inspection |
| | ○ ◇ ● □ ▽ | Delay |
| 060 | ● ◇ D □ ▽ | Repair Cycle - Replace Worn Seals MAPAB |
| 070 | ● ◇ D □ ▽ | Replace Cracked Ribs |
| 075 | ● ◇ D □ ▽ | Repair Hinge Assy |
| 076 | ● ◇ D □ ▽ | Install Skin Panels |
| 077 | ● ◇ D □ ▽ | Replace Cracked Bearing Castings |
| 080 | ● ◇ D □ ▽ | Clean / Treat Corrosion |
| 085 | ● ◇ D □ ▽ | Replace Balance Panel/Rib |
| [illegible] | ● ◇ D □ ▽ | Replace Caps |
| [illegible] | ● ◇ D □ ▽ | Rep/Rep Aileron Skins |
| [illegible] | ● ◇ D □ ▽ | Rem/Rep Ind/Out Aileron Skins |
| 115 | ● ◇ D □ ▽ | Clean / Treat Internal Corrosion |
| 120 | ● ◇ D □ ▽ | Install Skin Panel / Access Doors |
| 170 | ● ◇ D □ ▽ | Replace Bad Fasteners Exterior |
| 180 | ● ◇ D □ ▽ | Service/Rep Bearing Supports |
| 190 | ● ◇ D □ ▽ | Replace Damaged Small Parts |
| 250 | ● ◇ D □ ▽ | Replace Bad Fasteners Interior |
| 260 | ● ◇ D □ ▽ | Remove Tab Hinge Spar |
| 270 | ● ◇ D □ ▽ | Corrosion Work |
| 275 | ● ◇ D □ ▽ | Remove Skin Panels |
| 280 | ● ◇ D □ ▽ | Layout / Fabricate New Skins |
| 285 | ● ◇ D □ ▽ | Replace In/Out Trailing Edges |
| 290 | ● ◇ D □ ▽ | Alignment Check / Install In Fixture |
| 300 | ● ◇ D □ ▽ | Replace Out Bd Honeycomb Trailing Edge |
| 310 | ● ◇ D □ ▽ | Install New Skin Panels / Fairings |
| 320 | ● ◇ D □ ▽ | Repair Tab Hinge Spar |
| 330 | ● ◇ D □ ▽ | Inspect For / Remove FOD |
| 340 | ● ◇ D □ ▽ | Install In & Out Skin Panels |
| 350 | ● ◇ D □ ▽ | Perform Alignment Check / Remove From JIG |
| 360 | ● ◇ D □ ▽ | Install Spar Hinge Halves |
| 380 | ● ◇ D □ ▽ | Replace Damaged Accessory Door |
| 390 | ● ◇ D □ ▽ | Install Access Doors |
| 395 | ● ◇ D □ ▽ | Repair Dents, Scratches Etc. in Outer Surfaces |
| 400 | ● ◇ D □ ▽ | Apply Aero Sealant |
| | ○ ◇ ● □ ▽ | Delay |
| | ○ ● D □ ▽ | Move To 2280 |
| | ○ ◇ ● □ ▽ | Delay |
| 410 | ● ◇ D □ ▽ | Final Wash / Corrosion Treat 2280 MAPCB |
| 420 | ● ◇ D □ ▽ | Paint Aileron 2280 MAPCB |
| | ○ ◇ ● □ ▽ | Delay |
| | ○ ● D □ ▽ | Move To 95 |
| [illegible] | ○ ◇ ● □ ▽ | Delay |
| 430 | ● ◇ D □ ▽ | Balance Aileron 95 MAPAB |
| 440 | ● ◇ D □ ▽ | Install Decal With Current Weight |
| 450 | ● ◇ D ■ ▽ | Work Complete / Confirm Tag |
| | ○ ◇ D □ ▽ | |
| | ○ ◇ D □ ▽ | |

| 15249A * WORK CONTROL DOCUMENT * | 1.DATE 88053 | PAGE 1 OF 4 PAGES |
|---|---|---|

| 2.ORIG/PROD NR | 3.QUANTITY | 4.PROD SECTION/RCC | 5.DATE SCHED | 6.DATE COMP |
|---|---|---|---|---|
| | | MBPAB | 89093 | |

| 7.PART NUMBER | 9.ITEM SERIAL NR | 10/12.TECH DATA/OPTIONAL |
|---|---|---|
| | | 1. SOW C/N: DC-1560FL/ 78-1-32, DTD / AUG 78, |
| 10.MODEL/DESIGN/SERIES | 11.STOCK NR | 2. REVISION NO 2 DTD 20 FEB 79. |
| C-135 | | 3. WRITE IN ANY ADD'L WORK REQ'D. |
| 13.MISC | 14.NOUN/END ITEM NOUN | 4. FLIGHT CONTROL SURFACE NO.) |
| | DESCRIPTION 4.57 | 5. " MARKET BASKET " |
| | - MICHAEL TITANIC/MADLBC/65261 | |

| P/N | NOUN | C/N |
|---|---|---|
| 5-88192-103 | 156000/230009FL | 15222A |
| 5-88192-117 (M) | 156000B722400FL | 15249A ✓ |
| 5-88190-93 | 156000656184FL | 15190A |
| 5-88190-118 (M) | 156000B722401FL | 15250A ✓ |
| 5-88190-104 | 156000/230010FL | 15223A |

| 15.DISP-16.PDN/ STATION | OP NO. | 17.WORK TO BE ACCOMPLISHED | 18.MAT | 19"P" | 20"Q" |
|---|---|---|---|---|---|
| 2122 | 010 MBPCD | RECEIVE & UNCRATE MOVE TO WASH RACK - MBPCA | CU / | / | / |
| 2122 | 020 MBPCA | STRIP EXTERIOR PAINT IAW 1C-135(K)A-3 4, SEC X1 (PLUG ALL DRAIN HOLES IAW PARA 2 OF S.O.W.) | AU | / | / |
| 2122 | 030 MBPCA | TREAT FOR CORROSION IAW 1C-135(K) A 3 4, SECT. IV. MOVE TO MABPAB BLDG 95 | AU | / | / |
| 95 | 040 MBPAB | REMOVE ALL ACCESS DOORS FOR INSPECTION AND REPAIR | ES / | / | / |
| 95 | 050 MBPAB | REMOVE UPPER INBD & OUTBD SKIN PANELS FOR INSPECTION & REPAIR OBSERVE CAUTION | ES | / | / |
| 95 | 055 MBPAB | ACC. SHAKEDOWN INSPECTION IAW S.O.W. | ES | / | / |
| 95 | 060 MBPAB | REPLACE WORN OR DAMAGED SEALS WITH NEW SEALS. REQ'D_____NOT REQ'D_____ | ES | / | / |
| 95 | 070 MBPAB | REPLACE CRACKED RIBS AND WEBS, ETC REF S.O.W. REQ'D_____NOT REQ'D_____ | ES | / | / |
| 95 | 075 MBPAB | REPAIR LEAD WEIGHTS FROM HINGE ASSY REQD_____NOT REQD_____ | ES | / | / |
| 95 | 076 MBPAB | INSTALL LOWER SKIN PANELS UNDER HINGES. | ES | / | / |

| 15249A * WORK CONTROL DOCUMENT * | 1.DATE 08055 | PAGE 2 OF 4 PAGES |
|---|---|---|

| 15.DISP-16.PDN/ STATION | OP NO. | 17.WORK TO BE ACCOMPLISHED | 18.MECH | 19"P" | 20"W" |
|---|---|---|---|---|---|
| 95 | 077 MBPAB | REPLACE CRACKED BEARING CASTINGS.<br>REQD_____. NOT REQD_____ | ES | / | / |
| [illegible] | 080 MBPAB | CLEAN & TREAT CORROSION IAW 1C-135 (K)A-3-[illegible], SECT V | ES | / | / |
| 95 | 105 MBPAB | REPLACE BALANCE PANEL ATTACH. HINGE ASSYS<br>REQ'D_____NOT REQ'D_____ | ES | / | / |
| 95 | 108 MBPAB | REPLACE INBD AND OUTBD END CAPS<br>REQD_____ NOT REQD_____ | ES | / | / |
| 95 | 110 MBPAB | REPAIR/REPLACE SHORT NOSE SKINS<br>REQD_____ NOT REQD_____ | ES / | / | |
| 95 | 113 MBPAB | REPAIR OR REPLACE INBD & OUTBD NOSE SKINS.<br>REQ'D_____NOT REQ'D_____ | ES | / | / |
| 95 | 115 MBPAB | CLEAN & TREAT INTERNAL CORROSION IAW 1C-135(A)-3-4 | ES | E | / |
| 95 | 120 MBPAB | INSTALL LOWER SKIN PANEL & ACCESS DOORS | ES | / | |
| 95 | 170 MBPAB | REPLACE ALL LOOSE, SHEARED, OR MISSING FASTENERS (MARKED)<br>REQ'D_____NOT REQ'D_____ | ES | / | / |
| 95 | 180 MBPAB | SERVICE/REPLACE BEARING SUPPORTS<br>REQ'D_____ NOT REQ'D_____ | ES | / | |
| 95 | 190 MBPAB | REPLACE DAMAGED HINGE RETAINERS, ANGLES, CLIPS & CHANNELS<br>REQ'D_____NOT REQ'D_____ | ES | / | / |
| 95 | 250 MBPAB | REPLACE LOOSE, SHEARED, OR MISSING INTERNAL FASTENERS<br>1C-135(E)C-2-11-1, FIG 1 & 2.<br>REQ'D_____NOT REQ'D_____ | ES | / | / |
| 95 | 260 MBPAB | REMOVE TAB HINGE SPAR<br>REQD_____ NOT REQD_____ | ES | / | / |
| 95 | 270 MBPAB | CLEAN & TREAT EXTERNAL CORROSION IAW 1C-135(K)A-3 [illegible], SECT IV. | ES | / | / |
| 95 | 275 MBPAB | REMOVE OLD SKIN [illegible] NELS<br>REQD_____ NOT [illegible]_____ | ES | / | / |

| 15249A = WORK CONTROL DOCUMENT | 1.DATE 80055 | PAGE 3 OF 4 PAGES |
|---|---|---|

| 15.DISP 16.PDN/ STATION | OP NO. | 17.WORK TO BE ACCOMPLISHED | 13.MECH | 19"P" | 20"Q" |
|---|---|---|---|---|---|
| 95 | 280 MBPAB | LAYOUT & FABRICATE NEW SKIN PANELS<br>REQD_____ NOT REQD_____ | ES | / | / |
| 95 | 285 MBPAB | REMOVE & REPLACE INBD AND OUTBD TRAILING EDGES<br>REQD_____ NOT REQD_____ | ES / | | |
| 95 | 290 MBPAB | INSTALL AILERON IN JIG 590LJ1000 FOR ALIGNMENT CHECK. EDGE IAW JC-135(K)A-3-1<br>REQ'D_____NOT REQ'D_____ | ES | / | / |
| 95 | 295 MBPAB | REPLACE I. B. HONEYCOMB TRAILING EDGE IAW JC-135(K)-3-1<br>REQD_____ NOT REQD_____ | ES | / | / |
| 95 | 300 MBPAB | REPLACE O. B. HONEYCOMB TRAILING EDGE IAW JC-135(K)A-3-1<br>REQ'D_____NOT REQ'D_____ | ES | / | / |
| 95 | 310 MBPAB | INSTALL NEW SKIN PANELS AND FAIRINGS<br>REQD_____ NOT REQD_____ | ES | / | / |
| 95 | 320 MBPAB | REPAIR AB HINGE SPAR IAW AC 135(K) A-3-1, 16-2-103<br>REQ'D_____NOT REQ'D_____ | ES | / | / |
| 95 | 330 MBPAB | REMOVE FOD. ACCUM' CLOSEOUT INSP. | ES | E | / |
| 95 | 340 MBPAB | INSTALL INBOARD AND OUTBOARD SKIN PANELS | ES | / | / |
| 95 | 350 MBPAB | PERFORM ALIGNMENT CHECK AND REMOVE AILERON FROM JIG | ES | E | / |
| 95 | 360 MBPAB | INSTALL SPAR HINGE HALVES<br>REQD_____ NOT REQD_____ | ES | / | / |
| 95 | 380 MBPAB | REPLACE DAMAGED OR CRACKED ACCESSORY DOOR.<br>REQD_____ NOT REQD_____ | ES | / | / |
| 95 | 390 MBPAB | INSTALL ACCESS DOORS | ES | / | / |
| 95 | 395 MBPAB | REPAIR DENTS, SCRATCHES & GOUGES IN OUTR SURFACES IAW T.O.1C-135(K)A-3-1 C-2-11-1<br>REQD_____ NOT REQD_____ | ES | E | / |

| 1324YA | WORK CONTROL DOCUMENT | L.Unit 00055 | PAGE 4 OF 4 PAGES |
|---|---|---|---|

| 15.DISP-1o.PDN/ STATION/OP NO. | 17.WORK TO BE ACCOMPLISHED | 18.MECH | 19"T" | 20"Q" |
|---|---|---|---|---|
| 95 400 MBPAB | FILL ALL SKIN, TRAILING EDGE, & SKIN PANEL ACCESS COVER GAPS WITH ENVIRONMENTAL SEALANT. | EG | E | / |
| 2200 410 MBPCB | FINAL WASH & CORROSION TREAT MOVE TO PAINT, BLDG 2200, MBPCB | " | / | / |
| 2200 420 MBPCB | PAINT AILERON IAW T.O. 1C-135(K) 0 - 1, 1 1-4, 1C 135(K)A-3-4, OR SPECIAL REQUIREMENT. MOVE TO BLDG 95 MABPAB | AB | / | / |
| 95 430 MBPAB | BALANCE AILERON ASSEMBLY IAW T.O. 1C-135(K)A-3-3, FIG 1 3, | EG | / | / |
| " MBPAB | INSTALL NEW METAL ID OR DECAL WITH CURRENT WEIGHT AND DATA AND DATE. SERVICE BEARINGS & WRAP WITH BARRIER PAPER. | " | / | / |
| 95 450 MBPAB | WORK COMPLETED, CONDITION TAG IAW AFM 67-1. DATE _____ MOVE TO CRATING. NOTE: PART WILL HAVE EITHER OC ALC FORM 586, 587, OR 588 IDENTIFICATION LABELS APPLIED TO COMPLETED ITEM IAW AFLCR 66-51, CHG 1. ACCEPTANCE DATE ON THE LABEL ALONG WITH "N" STAMP OF PERSON PERFORMING THE OVERHAUL CAUTION: SURFACES TO WHICH LABELS ARE APPLIED MUST BE FREE OF CONTA- MINATION. " MARKET BASKET " | EG | E | / |

COORDINATION

| | | |
|---|---|---|
| MABEFS | MIKE TYTANIC | 23 FEB 88 |
| MAQBF | TED HAYES | 23 FEB 88 |
| MABPAB | GARY HART | 23 FEB 88 |
| MABSF | PAT HANCOCK | 23 FEB 88 |

# MABPAB LABOR STANDARDS

```
RCC  FAC PROD NO OPER  <-------DESCRIPTION--------> SK   OCC  T/S  HOURS  TECH

MBPAB F  15025A  00B10 REPAIR SIDE COWL L/H          AS  1.00  E  150.33   W
MBPAB F  15025A  00D10 SIDE COWL PANEL C135          AS  1.00  N    1.20   E
MBPAB F  15025A  00J10 L.H. SIDE COWL               FS  1.00  N    8.00   E  -->
MBPAB F  15025A  00R10 EOS CLEANUP                  AS  1.00  N    3.96   E
                                                                  155.49

ENTER DATA AS NEEDED
 RCC  PROD  ...ELSE 'END'
 <--->|<---->
?MBPAB15113A
RCC  FAC PROD NO OPER  <-------DESCRIPTION--------> SK   OCC  T/S  HOURS  TECH

MBPAB F  15113A  00B10 PANEL S/COWL R/H C 135       BS  1.00  E  142.74   W
MBPAB F  15113A  00D10 SHAKEDOWN INSPECTION         BS  1.00  N    1.22   E
MBPAB F  15113A  00J10 SIDE COWL L.H.               FS  1.00  N    8.00   E  -->
MBPAB F  15113A  00R10 EOS CLEANUP                  BS  1.00  N    3.76   E
                                                                  147.72

ENTER DATA AS NEEDED
 RCC  PROD  ...ELSE 'END'
 <--->|<---->
?MBPAB15119A
RCC  FAC PROD NO OPER  <-------DESCRIPTION--------> SK   OCC  T/S  HOURS  TECH

MBPAB F  15119A  00B10 REPAIR DOOR ASSY MLG          FS  1.00  E   83.40   W
MBPAB F  15119A  00D10 INSPECT DOOR ASSY      003N FS  1.00  N    3.08   E
MBPAB F  15119A  00R10 EOS CLEANUP                   FS  1.00  N    3.28   E
                                                                   89.76

ENTER DATA AS NEEDED
 RCC  PROD  ...ELSE 'END'
 <--->|<---->
?MBPAB15321A
RCC  FAC PROD NO OPER  <-------DESCRIPTION--------> SK   OCC  T/S  HOURS  TECH

MBPAB F  15321A  00B10 REPAIR DOOR ASSY MLG          FS  1.00  E   84.21   W
MBPAB F  15321A  00D10 INSPECT DOOR ASSY      111N FS  1.00  N    2.75   E
MBPAB F  15321A  00R10 EOS CLEANUP                   FS  1.00  N    3.28   E
                                                                   90.24

ENTER DATA AS NEEDED
 RCC  PROD  ...ELSE 'END'
 <--->|<---->
?MBPAB15136A
RCC  FAC PROD NO OPER  <-------DESCRIPTION--------> SK   OCC  T/S  HOURS  TECH

MBPAB F  15136A  00B10 REPR INBOARD AILERON          ES  1.00  E   76.34   W
MBPAB F  15136A  00D10 INSPECT AILERON              ES  1.00  N     .90   E
MBPAB F  15136A  00R10 EOS CLEANUP                   ES  1.00  N    1.94   E
                                                                   79.18

ENTER DATA AS NEEDED
 RCC  PROD  ...ELSE 'END'
 <--->|<---->
?MBPAB15137A
RCC  FAC PROD NO OPER  <-------DESCRIPTION--------> SK   OCC  T/S  HOURS  TECH

MBPAB F  15137A  00B10 REPR INBOARD AILERON          ES  1.00  E   76.34   W
MBPAB F  15137A  00D10 INSPECT AILERON              ES  1.00  N     .90   E
MBPAB F  15137A  00R10 EOS CLEANUP                   ES  1.00  N    1.94   E
                                                                   79.18

ENTER DATA AS NEEDED
```

```
 RC   PROD  ...ELSE  END
 <-  ---->
?MBPAB15152A
RCC  FAC PROD NO OPER  <-------DESCRIPTION--------> SK   OCC  T/S  HOURS  TECH

MBPAB F  15152A  00B10 REPAIR WING FLAP INBD.       DS   1.00  E  117.72   W
MBPAB F  15152A  00B20 REPAIR FOREFLAP              DS   1.00  N   16.50   T
MBPAB F  15152A  00D10 INSPECT FLAP                 DS   1.00  N     .51   E
MBPAB F  15152A  00J10 MFG MISC PARTS               FS   1.00  N   23.00   E -->
                                                                  134.73
ENTER DATA AS NEEDED
 RCC  PROD  ...ELSE 'END'
 <---><---->
?MBPAB15236A
RCC  FAC PROD NO OPER  <-------DESCRIPTION--------> SK   OCC  T/S  HOURS  TECH

MBPAB F  15236A  00B10 REPAIR SLEEVE ASSY           CS   1.00  E  117.08   W
MBPAB F  15236A  00B20 REPAIR AFT FAIRING           FS   1.00  N   28.00   E--> Dismay. 15236B
MBPAB F  15236A  00R10 EOS CLEANUP                  FS   1.00  N    4.50   E
                                                                  121.58
ENTER DATA AS NEEDED
 RCC  PROD  ...ELSE 'END'
 <---><---->
?MBPAB15237A
RCC  FAC PROD NO OPER  <-------DESCRIPTION--------> SK   OCC  T/S  HOURS  TECH

MBPAB F  15237A  00B10 REPAIR FAIRING AFT      004N FS   1.00  N   28.00   E
MBPAB F  15237A  00D10 SHAKEDOWN INSP FRNG AFT 004N FS   1.00  N     .60   E
MBPAB F  15237A  00J10 FAIRING ASSY,AFT MFG    K235 FS   1.00  N    2.00   E -->
                                                                   28.60
ENTER DATA AS NEEDED
 RCC  PROD  ...ELSE 'END'
 <---><---->
?MBPAB15249A
RCC  FAC PROD NO OPER  <-------DESCRIPTION--------> SK   OCC  T/S  HOURS  TECH

MBPAB F  15249A  00B10 REPR AILERON OB              ES   1.00  E  107.16   W
MBPAB F  15249A  00D10 INSPECT AILERON         K262 ES   1.00  N     .84   E
MBPAB F  15249A  00R10 EOS CLEANUP                  ES   1.00  N    2.53   E
                                                                  110.53
ENTER DATA AS NEEDED
 RCC  PROD  ...ELSE 'END'
 <---><---->
?MBPAB15250A
RCC  FAC PROD NO OPER  <-------DESCRIPTION--------> SK   OCC  T/S  HOURS  TECH

MBPAB F  15250A  00B10 REPR AILERON OB              ES   1.00  E  107.16   W
MBPAB F  15250A  00D10 INSPECT AILERON         K262 ES   1.00  N    1.30   E
MBPAB F  15250A  00R10 EOS CLEANUP                  ES   1.00  N    2.53   E
                                                                  110.99
ENTER DATA AS NEEDED
 RCC  PROD  ...ELSE 'END'
 <---><---->
?MBPAB15126A
RCC  FAC PROD NO OPER  <-------DESCRIPTION--------> SK   OCC  T/S  HOURS  TECH

MBPAB F  15126A  00B10 REPAIR DOOR ASSY MLG         FS   1.00  E   82.59   W
MBPAB F  15126A  00D10 INSPECT DOOR ASSY       003N FS   1.00  N    2.88   E
MBPAB F  15126A  00R10 EOS CLEANUP                  FS   1.00  N    3.26   E
                                                                   88.73
ENTER DATA AS NEEDED
 RCC  PROD  ...ELSE 'END'
 <---><---->
?MBPAB15300A
RCC  FAC PROD NO OPER  <-------DESCRIPTION--------> SK   OCC  T/S  HOURS  TECH

MBPAB F  15300A  00B10 REPAIR DOOR ASSY MLG         FS   1.00  E   92.30   W
MBPAB F  15300A  00D10 INSPECT DOOR ASSY            FS   1.00  N    [illegible]   E
```

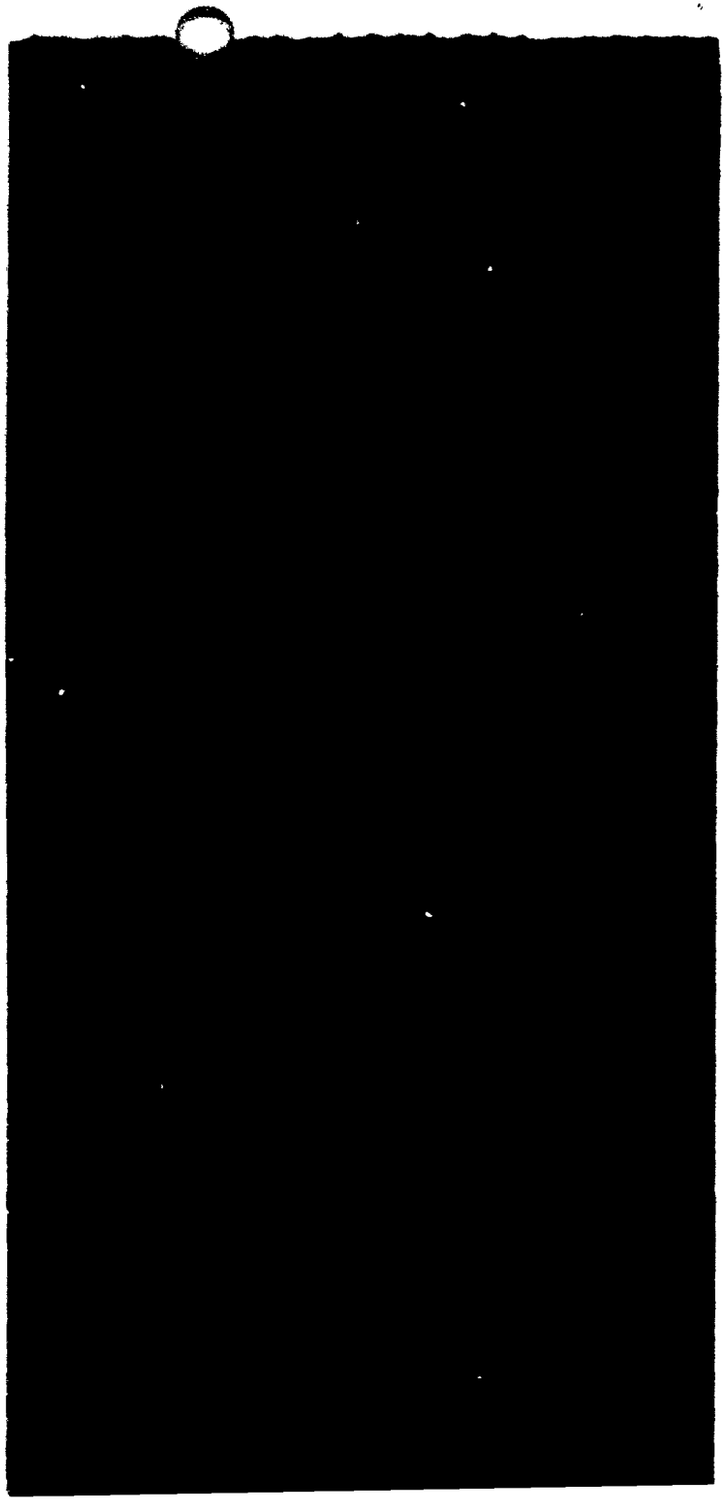

```
MBPAB F  15188A  00K10 707 CONVERSION                DS   1.00  N   42.00   E
MBPAB F  15188A  00R10 EOS CLEANUP                   DS   1.00  N    3.17   E
                                                                    180.90
ENTER DATA AS NEEDED
 RCC  PROD  ...ELSE 'END'
 <---><---->
?MBPAB15189A
RCC  FAC PROD NO OPER  <-------DESCRIPTION--------> SK   OCC  T/S  HOURS  TECH

MBPAB F  15189A  00B10 REPAIR WING FLAP OTBD.        DS   1.00  E  119.73   W
MBPAB F  15189A  00B20 REPAIR FOREFLAP               DS   1.00  N   15.00   T
MBPAB F  15189A  00D10 INSPECT FLAP                  DS   1.00  N    1.00   E
MBPAB F  15189A  00J10 MFG MISC PARTS                FS   1.00  N   13.00   E -->
MBPAB F  15189A  00K10 707 CONVERSION                DS   1.00  N   42.00   E
MBPAB F  15189A  00R10 EOS CLEANUP                   DS   1.00  N    3.17

        TA AS NEEDED
                 'END'

  AB15154A
RCC  FAC PROD  ...                  SCRIPTION--------> SK   OCC  T/S  HOURS  TECH

MBPAB F  15154A  00B10 REPAIR WING FLAP OTBD.        DS   1.00  E  119.73   W
MBPAB F  15154A  00B20 REPAIR FOREFLAP               DS   1.00  N   15.00   T
MBPAB F  15154A  00D10 INSPECT FLAP                  DS   1.00  N    1.00   E
MBPAB F  15154A  00J10 MFG MISC PARTS                FS   1.00  N   13.00   E -->

ENTER DATA AS NEEDED
 RCC  PROD  ...ELSE 'END'
 <---><---->
?MBPAB15151A
RCC  FAC PROD NO OPER  <-------DESCRIPTION--------> SK   OCC  T/S  HOURS  TECH

MBPAB F  15151A  00B10 REPAIR WING FLAP INBD.        DS   1.00  E  117.72   W
MBPAB F  15151A  00B20 REPAIR FOREFLAP               DS   1.00  N   15.00   T
MBPAB F  15151A  00D10 INSPECT FLAP                  DS   1.00  N    1.00   E
MBPAB F  15151A  00J10 MFG MISC PARTS                FS   1.00  N   23.00   E -->

ENTER DATA AS NEEDED
 RCC  PROD  ...ELSE 'END'
 <---><---->
?MBPAB15191A
RCC  FAC PROD NO OPER  <-------DESCRIPTION--------> SK   OCC  T/S  HOURS  TECH

MBPAB F  15191A  00B10 REPAIR WING FLAP INBD.        DS   1.00  E  117.72   W
MBPAB F  15191A  00B20 REPAIR FOREFLAP               DS   1.00  N   15.00   T
MBPAB F  15191A  00D10 INSPECT                       DS   1.00  N    1.00   E
MBPAB F  15191A  00J10 MFG MISC PARTS                FS   1.00  N   23.00   E -->
MBPAB F  15191A  00K10 707 CONVERSION                DS   1.00  N   42.00   E
MBPAB F  15191A  00R10 EOS CLEANUP                   DS   1.00  N    3.12   E

ENTER DATA AS NEEDED
 RCC  PROD  ...ELSE 'END'
 <---><---->
?MBPAB15192A
RCC  FAC PROD NO OPER  <-------DESCRIPTION--------> SK   OCC  T/S  HOURS  TECH

MBPAB F  15192A  00B10 REPAIR WING FLAP INBD.        DS   1.00  E  117.72   W
MBPAB F  15192A  00B20 REPAIR FORE FLAP              DS   1.00  N   15.00   E
MBPAB F  15192A  00D10 INSPECT                       DS   1.00  N    1.00   E
MBPAB F  15192A  00J10 MFG MISC PARTS                FS   1.00  N   23.00   E
MBPAB F  15192A  00K10 707 CONVERSION                DS   1.00  N   42.00   E
MBPAB F  15192A  00R10 EOS CLEANUP                   DS   1.00  N    3.12   E

ENTER DATA AS NEEDED
 RCC  PROD  ...ELSE 'END'
```

```
<--  ---->
?MBPAB15140A
RCC  FAC PROD NO OPER  <-------DESCRIPTION--------> SK   OCC  T/S  HOURS  TECH

MBPAB F  15140A  00B10 REPAIR FAIRING          004N FS   1.00  E   49.80   W
MBPAB F  15140A  00D10 SHAKEDOWN INSPECTION    312N FS   1.00  N     .80   E
MBPAB F  15140A  00J10 MFG SUPP FAIRING        004N FS   1.00  N    7.04   E -->
MBPAB F  15140A  00R10 EOS CLEANUP                  FS   1.00  N    1.05   E
                                                                  51.65
ENTER DATA AS NEEDED
 RCC  PROD  ...ELSE 'END'
 <--->< ---->
?MBPAB15150A
RCC  FAC PROD NO OPER  <-------DESCRIPTION--------> SK   OCC  T/S  HOURS  TECH

MBPAB F  15150A  00B10 REPAIR NOSE COWL KC135  312E CS   1.00  E   82.09   W
MBPAB F  15150A  00D10 SHAKEDOWN INSPECTION    312N CS   1.00  N    1.14   E
MBPAB F  15150A  00J10 MFG SUPPORT NOSE COWL   401N FS   1.00  N    7.20   E -->
MBPAB F  15150A  00R10 EOS CLEANUP                  CS   1.00  N    1.92   E
                                                                  85.15
ENTER DATA AS NEEDED
 RCC  PROD  ...ELSE 'END'
 <--->< ---->
?MBPAB15175A
RCC  FAC PROD NO OPER  <-------DESCRIPTION--------> SK   OCC  T/S  HOURS  TECH

MBPAB F  15175A  00B10 REPAIR BOOM TAIL CONE        FS   1.00  E   70.18   W
MBPAB F  15175A  00D10 SHAKEDOWN                    FS   1.00  N     .67   E
MBPAB F  15175A  00J10 MFG. SPLICES                 FS   1.00  N    1.00   E -->
MBPAB F  15175A  00R10 EOS CLEANUP                  FS   1.00  N    3.01   E
                                                                  73.86
ENTER DATA AS NEEDED
 RCC  PROD  ...ELSE 'END'
 <--->< ---->
?MBPAB15178A
RCC  FAC PROD NO OPER  <-------DESCRIPTION--------> SK   OCC  T/S  HOURS  TECH

MBPAB F  15178A  00B10 REPAIR OIL COOLER            FS   1.00  E   17.94   W
MBPAB F  15178A  00D10 SHAKEDOWN                    FS   1.00  N     .56   E
MBPAB F  15178A  00J10 MFG PRTS SUPP O\COOLER       FS   1.00  N    4.99   E -->
MBPAB F  15178A  00R10 EOS CLEANUP                  FS   1.00  N     .47   E
                                                                  18.97
ENTER DATA AS NEEDED
 RCC  PROD  ...ELSE 'END'
 <--->< ---->
?MBPAB15153A
RCC  FAC PROD NO OPER  <-------DESCRIPTION--------> SK   OCC  T/S  HOURS  TECH

MBPAB F  15153A  00B10 REPAIR WING FLAP OTBD.       DS   1.00  E  119.73   W
MBPAB F  15153A  00B20 REPAIR FORE FLAP             DS   1.00  N   15.00   T
MBPAB F  15153A  00D10 INSPECT FLAP                 DS   1.00  N    1.00   E
MBPAB F  15153A  00J10 MFG MISC PARTS               FS   1.00  N   13.00   E -->
                                                                 135.73
ENTER DATA AS NEEDED
 RCC  PROD  ...ELSE 'END'
 <--->< ---->
?MBPAB15188A
RCC  FAC PROD NO OPER  <-------DESCRIPTION--------> SK   OCC  T/S  HOURS  TECH

MBPAB F  15188A  00B10 REPAIR WING FLAP OTBD.       DS   1.00  E  119.73   W
MBPAB F  15188A  00B20 REPAIR FOREFLAP              DS   1.00  N   15.00   T
MBPAB F  15188A  00D10 INSPECT FLAP                 DS   1.00  N    1.00   E
MBPAB F  15188A  00J10 MFG MISC PARTS               FS   1.00  N   13.00   E -->
MBPAB F  15188A  00K10 707 CONVERSION               DS   1.00  N   42.00   E
MBPAB F  15188A  00R10 EOS CLEANUP                  DS   1.00  N    3.17   E
                                                                 180.90
ENTER DATA AS NEEDED
```

```
?MBPAB15153A
RCC  FAC PROD NO OPER  <-------DESCRIPTION--------> SK   OCC   T/S  HOURS   TECH

MBPAB F  15153A  00B10 REPAIR WING FLAP OTBD.       DS  1.00   E  119.73    W
MBPAB F  15153A  00B20 REPAIR FORE FLAP             DS  1.00   N   15.00    T
MBPAB F  15153A  00D10 INSPECT FLAP                 DS  1.00   N    1.00    E
MBPAB F  15153A  00J10 MFG MISC PARTS               FS  1.00   N   13.00    E

ENTER DATA AS NEEDED
 RCC  PROD  ...ELSE 'END'
 <---><---->
?MBPAB15154A
RCC  FAC PROD NO OPER  <-------DESCRIPTION--------> SK   OCC   T/S  HOURS   TECH

MBPAB F  15154A  00B10 REPAIR WING FLAP OTBD.       DS  1.00   E  119.73    W
MBPAB F  15154A  00B20 REPAIR FOREFLAP              DS  1.00   N   15.00    T
MBPAB F  15154A  00D10 INSPECT FLAP                 DS  1.00   N    1.00    E
MBPAB F  15154A  00J10 MFG MISC PARTS               FS  1.00   N   13.00    E

ENTER DATA AS NEEDED
 RCC  PROD  ...ELSE 'END'
 <---><---->
?MBPAB15188A
RCC  FAC PROD NO OPER  <-------DESCRIPTION--------> SK   OCC   T/S  HOURS   TECH

MBPAB F  15188A  00B10 REPAIR WING FLAP OTBD.       DS  1.00   E  119.73    W
MBPAB F  15188A  00B20 REPAIR FOREFLAP              DS  1.00   N   15.00    T
MBPAB F  15188A  00D10 INSPECT FLAP                 DS  1.00   N    1.00    E
MBPAB F  15188A  00J10 MFG MISC PARTS               FS  1.00   N   13.00    E
MBPAB F  15188A  00K10 707 CONVERSION               DS  1.00   N   42.00    E
MBPAB F  15188A  00R10 EOS CLEANUP                  DS  1.00   N    3.17    E

ENTER DATA AS NEEDED
 RCC  PROD  ...ELSE 'END'
 <---><---->
?MBPAB15189A
RCC  FAC PROD NO OPER  <-------DESCRIPTION--------> SK   OCC   T/S  HOURS   TECH

MBPAB F  15189A  00B10 REPAIR WING FLAP OTBD.       DS  1.00   E  119.73    W
MBPAB F  15189A  00B20 REPAIR FOREFLAP              DS  1.00   N   15.00    T
MBPAB F  15189A  00D10 INSPECT FLAP                 DS  1.00   N    1.00    E
MBPAB F  15189A  00J10 MFG MISC PARTS               FS  1.00   N   13.00    E
MBPAB F  15189A  00K10 707 CONVERSION               DS  1.00   N   42.00    E
MBPAB F  15189A  00R10 EOS CLEANUP                  DS  1.00   N    3.17    E

ENTER DATA AS NEEDED
 RCC  PROD  ...ELSE 'END'
 <---><---->
```

```
?15153A
RCC  FAC PROD NO OPER  <--------DESCRIPTION---------> SK    OCC  T/S  HOURS  TECH

MBPAB F   15153A  00B10 REPAIR WING FLAP OTBD.        DS   1.00  E  119.73   W
MBPAB F   15153A  00B20 REPAIR FORE FLAP              DS   1.00  N   15.00   T
MBPCA B   15153A  00C10 STRIP & WASH                  WL   1.00  N    8.91   E
MBPCB D   15153A  00C20 PAINT & FINAL WASH            B3   1.00  N    4.05   E
MBPCD B   15153A  00C50 UNCRATE                       CQ   1.00  N    1.53   E
MBPAB F   15153A  00D10 INSPECT FLAP                  DS   1.00  N    1.00   E
MBPAB F   15153A  00J10 MFG MISC PARTS                FS   1.00  N   13.00   E
MQCIA 1   15153A  CIX10 5-87851-145 OB FLAP    506N AI   1.00  N     .87   E

ENTER DATA AS NEEDED
 PROD ...ELSE 'END'
 <---->
?15154A
RCC  FAC PROD NO OPER  <--------DESCRIPTION---------> SK    OCC  T/S  HOURS  TECH

MBPAB F   15154A  00B10 REPAIR WING FLAP OTBD.        DS   1.00  E  119.73   W
MBPAB F   15154A  00B20 REPAIR FOREFLAP               DS   1.00  N   15.00   T
MBPCA B   15154A  00C10 STRIP & WASH                  WL   1.00  N    8.00   E
MBPCB D   15154A  00C20 PRIME & PAINT                 B3   1.00  N    3.06   E
MBPCD B   15154A  00C50 UNCRATE                       CQ   1.00  N    1.53   E
MBPAB F   15154A  00D10 INSPECT FLAP                  DS   1.00  N    1.00   E
MBPAB F   15154A  00J10 MFG MISC PARTS                FS   1.00  N   13.00   E
MQCIA 1   15154A  CIX10 5-87851-146 OB FLAP    506N AI   1.00  N     .87   E

ENTER DATA AS NEEDED
 PROD ...ELSE 'END'
 <---->
?15188A
RCC  FAC PROD NO OPER  <--------DESCRIPTION---------> SK    OCC  T/S  HOURS  TECH

MBPAB F   15188A  00B10 REPAIR WING FLAP OTBD.        DS   1.00  E  119.73   W
MBPAB F   15188A  00B20 REPAIR FOREFLAP               DS   1.00  N   15.00   T
MBPCA B   15188A  00C10 STRIP & WASH                  WL   1.00  N    8.91   E
MBPCB D   15188A  00C20 PAINT & FINAL WASH            B3   1.00  N    4.05   E
MBPCD B   15188A  00C50 UNCRATE                       CQ   1.00  N    1.53   E
MBPAB F   15188A  00D10 INSPECT FLAP                  DS   1.00  N    1.00   E
MBPAE A   15188A  00F10 MOVE END ITEMS                CQ   1.00  N    1.10   E
MBPAB F   15188A  00J10 MFG MISC PARTS                FS   1.00  N   13.00   E
MBPAB F   15188A  00K10 707 CONVERSION                DS   1.00  N   42.00   E
MBPCB D   15188A  00P10 OPERATE TOOL CRIB             B3   1.00  N     .45   E
MBPAB F   15188A  00R10 EOS CLEANUP                   DS   1.00  N    3.17   E
MBSCM A   15188A  00S15 MIC POOL                      CQ   1.00  N    1.42   E
MBPAE A   15188A  00T10 OPERATE TOOL CRIB            DQ   1.00  N    1.10   E
MBPCA B   15188A  00W10 OPERATE TOOL CRIB            WL   1.00  N     .62   E
MBPCA B   15188A  00X10 EOS CLEANUP                  WL   1.00  N     .61   E
MBPCB D   15188A  00Y10 EOS CLEANUP                  B3   1.00  N     .61   E
MBPCD 9   15188A  00Z10 EOS CLEANUP                  CQ   1.00  N     .43   E
MQCIA 1   15188A  CIX10 5-87851-155 OB FLAP    506N AI   1.00  N     .87   E

ENTER DATA AS NEEDED
 PROD ...ELSE 'END'
 <---->
```

COMMAND- 15025A

| RCC | FAC | PROD NO | OPER | <-------DESCRIPTION--------> | SK | OCC | T/S | HOURS | TECH |
|---|---|---|---|---|---|---|---|---|---|
| [redacted] | | | | | AS | 1.00 | E | 150.33 | W [redacted] |
| MBPCA | 8 | 15025A | [redacted] | SIDE COWL LH C-135 | WL | 1.00 | N | 13.19 | T |
| MBPCB | D | 15025A | [redacted] | SIDE COWL LH PRIME/PT | B3 | 1.00 | N | 6.60 | E |
| MBPCD | 8 | 15025A | [redacted] | UNCRATE NOSE COWL L/H | CQ | 1.00 | N | .64 | E |
| [redacted] | | | | | AS | 1.00 | N | 1.20 | E |
| MBPAE | A | 15025A | 00F10 | MOVE END ITEM | CQ | 1.00 | N | 1.17 | E |
| [redacted] | | | | | FS | 1.00 | N | 8.00 | E |
| MBPCB | D | 15025A | 00P10 | OPERATE TOOL CRIB | B3 | 1.00 | N | .48 | E |
| [redacted] | | | | | AS | 1.00 | N | 3.96 | E |
| MBSCM | A | 15025A | 00S15 | MIC POOL | CQ | 1.00 | N | 1.78 | E |
| MBPAE | A | 15025A | 00T10 | OPERATE TOOL CRIB | DQ | 1.00 | N | 1.17 | E |
| MBPCA | 8 | 15025A | 00W10 | OPERATE TOOL CRIB | WL | 1.00 | N | .66 | E |
| MBPCA | 8 | 15025A | 00X10 | EOS CLEANUP | WL | 1.00 | N | .76 | E |
| MBPCB | D | 15025A | 00Y10 | EOS CLEANUP | B3 | 1.00 | N | .76 | E |
| MBPCD | 9 | 15025A | 00Z10 | EOS CLEANUP | CQ | 1.00 | N | .54 | E |
| MEPSH | 6 | 15025A | HCW10 | HEAT TREAT 808N | AK | 1.00 | N | .20 | E |
| MEPSH | 6 | 15025A | HCW20 | RIVETS P/N MS20470 811N | AK | 1.00 | N | .12 | E |
| MEPSG | 3 | 15025A | PCW10 | C135/E3A MISTR BACKSHOP | CR | 1.00 | N | .17 | E |
| MBPCA | 8 | 15025A | [redacted] | BLAST COWL 011N | WL | 1.00 | N | 3.12 | E |
| MTPIW | 6 | 15025A | WCZ10 | 35-32371-1 PANEL 15025A 601N | AW | 1.00 | N | .29 | E |
| MTPIW | 6 | 15025A | WCZ11 | 5-85637-62 FIRE SEAL FRAME | AW | 1.00 | N | .50 | E |
| MTPIW | 6 | 15025A | WCZ12 | 5-85637-38 FIRE SEAL FRAME | AW | 1.00 | N | .50 | E |

ENTER DATA AS NEEDED
PROD ...ELSE 'END'
<---->
?15113A

| RCC | FAC | PROD NO | OPER | <-------DESCRIPTION--------> | SK | OCC | T/S | HOURS | TECH |
|---|---|---|---|---|---|---|---|---|---|
| [redacted] | | | | | | | | | |
| MBPCA | 8 | 15113A | 00C10 | SIDE COWL C-135 | WL | 1.00 | N | 12.73 | E |
| MBPCB | D | 15113A | 00C30 | PAINT SIDE COWL KC135 | B3 | 1.00 | N | 6.60 | E |
| MBPCB | D | 15113A | 00C40 | FINAL WASH | B3 | 1.00 | N | .70 | E |
| MBPCD | 8 | 15113A | 00C50 | UNCRATE SIDE COWL | CQ | 1.00 | N | .75 | E |
| [redacted] | | | | | | | | | |
| MBPAE | A | 15113A | 00F10 | MOVE END ITEM | CQ | 1.00 | N | 1.12 | E |
| [redacted] | | | | | | | | | |
| MBPCB | D | 15113A | 00P10 | OPERATE TOOL CRIB | B3 | 1.00 | N | .45 | E |
| [redacted] | | | | | | | | | |
| MBSCM | A | 15113A | 00S15 | MIC POOL | CQ | 1.00 | N | 1.69 | E |
| MBPAE | A | 15113A | 00T10 | OPERATE TOOL CRIB | DQ | 1.00 | N | 1.12 | E |
| MBPCA | 8 | 15113A | 00W10 | OPERATE TOOL CRIB | WL | 1.00 | N | .63 | E |
| MBPCA | 8 | 15113A | 00X10 | EOS CLEANUP | WL | 1.00 | N | .73 | E |
| MBPCB | D | 15113A | 00Y10 | EOS CLEANUP | B3 | 1.00 | N | .73 | E |
| MBPCD | 9 | 15113A | 00Z10 | EOS CLEANUP | CQ | 1.00 | N | .51 | E |
| MEPSH | 6 | 15113A | HCW10 | C135/E3A 808N | AK | 1.00 | N | .20 | E |
| MEPSH | 6 | 15113A | HCW20 | RIVETS P/N MS20426 811N | AK | 1.00 | N | .12 | E |
| MEPSG | 3 | 15113A | PCW10 | C135/E3A MISTR BACKSHOP | CR | 1.00 | N | .17 | E |
| MBPCA | 8 | 15113A | SAW30 | BLAST COWL KC-135 011N | WL | 1.00 | N | 3.17 | E |
| MTPIW | 6 | 15113A | WCZ10 | 772-7042-10 PANEL 15113A601N | AW | 1.00 | N | .73 | E |

ENTER DATA AS NEEDED
PROD ...ELSE 'END'
<---->
?15119A

| RCC | FAC | PROD NO | OPER | <-------DESCRIPTION--------> | SK | OCC | T/S | HOURS | TECH |
|---|---|---|---|---|---|---|---|---|---|
| MBPAB | F | 15119A | 00B10 | REPAIR DOOR ASSY MLB | FS | 1.00 | E | 83.40 | W |
| MBPCA | 8 | 15119A | 00C10 | STRIP AND WASH DOOR 003N | WL | 1.00 | N | 3.69 | E |
| MBPCB | D | 15119A | 00C20 | PAINT DOOR ASSY J247 | B3 | 1.00 | N | 10.00 | E |

00B10 REPAIR
00C10 WASH/STRIP
00C30 PAINT
00C50 REC/UNCRATE
00D10 SHKDN/INSP.
SAW30 ABRASIVE BLAST

(150.33/2) + 13.19 + 6.6 + .64 + 1.2 + 3.12
75.17+
99.915

```
MB[illegible] B  15119A  00C10 STRIP AND WASH DOOR      003N WL   1.00        3.69   E
MBPCB D  15119A  00C20 PAINT DOOR ASSY          J247 B3   1.00  N    10.00   E
MBPCD 8  15119A  00C50 UNCRATE DOOR ASSY        003N CQ   1.00  N      .37   E
[illegible] F  15119A  00D10 INSPECT DOOR ASSY        003N FS   1.00  N     3.08   E
[illegible]  15119A  00R10 EOS CLEANUP                   FS   1.00  N     3.28   E
MBSCM A  15119A  00S15 MIC POOL                      CQ   1.00  N     1.47   E
MBPCA 8  15119A  00X10 EOS CLEANUP                   WL   1.00  N      .63   E
MBPCB 9  15119A  00Y10 EOS CLEANUP                   B3   1.00  N      .63   E
MBPCD 9  15119A  00Z10 EOS CLEANUP                   CQ   1.00  N      .45   E

ENTER DATA AS NEEDED
 PROD ...ELSE 'END'
 <---->
?15321A
RCC  FAC PROD NO OPER  <-------DESCRIPTION--------> SK   OCC  T/S  HOURS  TECH

[illegible]                                          FS   1.00  E    84.21   W
MBPCA 8  15321A  00C10 WASH [illegible] ASSY        111N WL   1.00  N     4.14   E
MBPCB 0  15321A  00C20 PAINT DOOR ASSY          111N B3   1.00  N    10.00   E
MBPCD 8  15321A  00C50 UNCRATE DOOR  ASSY            CQ   1.00  N      .41   E
[illegible]                                      111N FS   1.00  N     2.75   E
MBPAE A  15321A  00F10 MOVE PARTS                    CQ   1.00  N      .92   E
MBPCB D  15321A  00P10 TOOL CRIB ATTENDANT           B3   1.00  N      .37   E
[illegible]                                          FS   1.00  N     3.28   E
MBSCM A  15321A  00S15 MIC POOL                      CQ   1.00  N     1.47   E
MBPAE A  15321A  00T10 TOOL CRIB ATTENDANT           DQ   1.00  N      .92   E
MBPCA 8  15321A  00W10 TOOL CRIB ATTENDANT           WL   1.00  N      .52   E
MBPCA 8  15321A  00X10 EOS CLEANUP                   WL   1.00  N      .63   E
MBPCB D  15321A  00Y10 EOS CLEANUP                   B3   1.00  N      .63   E
MBPCD 9  15321A  00Z10 EOS CLEANUP                   CQ   1.00  N      .45   E

ENTER DATA AS NEEDED
 PROD ...ELSE 'END'
 <---->
?15136A
RCC  FAC PROD NO OPER  <-------DESCRIPTION--------> SK   OCC  T/S  HOURS  TECH

[illegible]                                          ES   1.00  E    76.34   W
MBPCA 8  15136A  00C10 STRIP/WASH AILERON            WL   1.00  N     6.00   E
MBPCB D  15136A  00C20 PRIME & PAINT AILERON         B3   1.00  N     2.64   E
MBPCD 8  15136A  00C50 UNCRATE AILERON               CQ   1.00  N     1.32   E
[illegible]                                          ES   1.00  N      .90   E
MBPAE A  15136A  00F10 MOVE PARTS                    CQ   1.00  N      .57   E
MBPCB D  15136A  00P10 TOOL CRIB ATTENDANT           B3   1.00  N      .23   E
[illegible]                                          ES   1.00  N     1.94   E
MBSCM A  15136A  00S15 MIC POOL                      CQ   1.00  N      .87   E
MBPAE A  15136A  00T10 TOOL CRIB ATTENDANT           DQ   1.00  N      .57   E
MBPCA 8  15136A  00W10 TOOL CRIB ATTENDANT           WL   1.00  N      .32   E
MBPCA 8  15136A  00X10 EOS CLEANUP                   WL   1.00  N      .37   E
MBPCB D  15136A  00Y10 EOS CLEANUP                   B3   1.00  N      .37   E
MBPCD 9  15136A  00Z10 EOS CLEANUP                   CQ   1.00  N      .26   E
MTPIT 1  15136A  TCZ10 5-86072-169 AILERON      105N BJ   1.00  N     9.30   E

ENTER DATA AS NEEDED
 PROD ...ELSE 'END'
 <---->
?15137A
RCC  FAC PROD NO OPER  <-------DESCRIPTION--------> SK   OCC  T/S  HOURS  TECH

[illegible]                                          ES   1.00  E    76.34   W
MBPCA 8  15137A  00C10 WASH/STRIP AILERON            WL   1.00  N     6.00   E
MBPCB D  15137A  00C20 PRIME & PAINT AILERON         B3   1.00  N     2.64   E
MBPCD 8  15137A  00C50 UNCRATE AILERON               CQ   1.00  N     1.32   E
[illegible]                                          ES   1.00  N      .90   E
MBPAE A  15137A  00F10 MOVE PARTS                    CQ   1.00  N      .57   E
MBPCB D  15137A  00P10 TOOL CRIB ATTEND              B3   1.00  N      .23   E
MBPAB F  15137A  00R10 EOS CLEANUP                   ES   1.00  N     1.94   E
```

```
MBF    1  15137A  00F10 TOOL CRIB ATTEND                  B3   1.00        [illegible]   E
MBP    F  15137A  00R10 EOS CLEANUP                       ES   1.00        1.94   E
MBSCM  A  15137A  00S15 MIC POOL                          CQ   1.00  N     .87   E
MBPAE  A  15137A  00T10 TOOL CRIB ATTENDANT               DQ   1.00  N     .57   E
MBPCA  8  15137A  00W10 TOOL CRIB ATTENDANT               WL   1.00  N     .32   E
MBPCA  8  15137A  00X10 EOS CLEANUP                       WL   1.00  N     .37   E
MBPCB  D  15137A  00Y10 EOS CLEANUP                       B3   1.00  N     .37   E
MBPCD  9  15137A  00Z10 EOS CLEANUP                       CQ   1.00  N     .26   E
MTPIM  1  15137A  MCZ10 69-1353-8 SUPPOR 35A006 610N AJ   1.00  N     .75   E
MTPIT  1  15137A  TCZ10 5-86072-170 AILERON      105N BJ   1.00  N    9.30   E

ENTER DATA AS NEEDED
 PROD ...ELSE 'END'
 <---->
?15140A
RCC  FAC PROD NO OPER  <-------DESCRIPTION--------> SK   OCC  T/S  HOURS  TECH

[redacted]  00B10 [redacted]  004N FS   1.00  E   49.80   W
MBPCA  8  15140A  00C10 WASH STRIP FAIRING       004N WL   1.00  N    1.35   E
MBPCB  D  15140A  00C20 FINAL WASH/PAINT FAIRING004N B3   1.00  N    1.23   E
MBPCD  8  15140A  00C50 UNCRATE FAIRING          004N CQ   1.00  N     .54   E
[redacted]  312N FS   1.00  N     .80   E
MBPAE  A  15140A  00F10 MOVE PARTS                       CQ   1.00  N     .35   E
[redacted]  004N FS   1.00  N    7.04   E
MBPCB  D  15140A  00P10 TOOL CRIB ATTENDANT              B3   1.00  N     .14   E
MBPAB  F  15140A  00R10 EOS CLEANUP                      FS   1.00  N    1.05   E
MBSCM  A  15140A  00S15 MIC POOL                         CQ   1.00  N     .47   E
MBPAE  A  15140A  00T10 TOOL CRIB ATTENDANT              DQ   1.00  N     .35   E
MBPCA  8  15140A  00W10 TOOL CRIB ATTENDANT              WL   1.00  N     .02   E
MBPCA  9  15140A  00X10 EOS CLEANUP                      WL   1.00  N     .20   E
MBPCB  D  15140A  00Y10 EOS CLEANUP                      B3   1.00  N     .20   E
MBPCD  9  15140A  00Z10 EOS CLEANUP                      CQ   1.00  N     .14   E

ENTER DATA AS NEEDED
 PROD ...ELSE 'END'
 <---->
?15150A
RCC  FAC PROD NO OPER  <-------DESCRIPTION--------> SK   OCC  T/S  HOURS  TECH

[redacted]  00B10 [redacted]  1.00  E   82.09   W
MBPCA  8  15150A  00C10 WASH STRIP NOSE COWL     312E WL   1.00  N    4.05   E
MBPCB  D  15150A  00C20 PAINT NOSE COWL          K340 B3   1.00  N    1.87   E
MBPCB  D  15150A  00C40 F/WASH NOSE COWL         401E B3   1.00  N    1.25   E
MBPCD  8  15150A  00C50 UNCRATE NOSE COWL        401N CQ   1.00  N     .29   T
[redacted]  312N CS   1.00  N    1.14   E
MBPAE  A  15150A  00F10 MOVE END ITEM                    CQ   1.00  N     .70   E
[redacted]  401N FS   1.00  N    7.20   E
MBPCB  D  15150A  00P10 OPERATE TOOL CRIB                B3   1.00  N     .28   E
[redacted]  1.00  N    1.92   E
MBSCM  A  15150A  00S15 MIC POOL                         CQ   1.00  N     .86   E
MBPAE  A  15150A  00T10 OPERATE TOOL CRIB                DQ   1.00  N     .70   E
MBPCA  8  15150A  00W10 OPERATE TOOL CRIB                WL   1.00  N     .39   E
MBPCA  8  15150A  00X10 EOS CLEANUP                      WL   1.00  N     .37   E
MBPCB  D  15150A  00Y10 EOS CLEANUP                      B3   1.00  N     .37   E
MBPCD  9  15150A  00Z10 EOS CLEANUP                      CQ   1.00  N     .26   E
MQCIA  1  15150A  CIX10 5-85655-150 NOSE COWL    506N AI   1.00  N     .83   E

ENTER DATA AS NEEDED
 PROD ...ELSE 'END'
 <---->
?15175A
RCC  FAC PROD NO OPER  <-------DESCRIPTION--------> SK   OCC  T/S  HOURS  TECH

MBPAA  6  15175A  00A20 REPR 135 BOOM TAIL CONE          AE   1.00  N   12.14   E
MBPAB  F  15175A  00B10 REPAIR BOOM TAIL CONE            FS   1.00  E   70.18   W
MBPCA  8  15175A  00C10 STRIP/WASH BOOM CONE     0197 WL   1.00  N    4.00   E
MBPCB  D  15175A  00C20 FIN WASH/PAINT           0197 B3   1.00  N    3.40   E
MBPCD  8  15175A  00C50 UNCRATE BOOM TAILCONE    0197 CQ   1.00  N    1.11   E
```

```
MBF    3  15175A  00C50 UNCRATE BOOM TAILCONE    0197 CQ   1.00        1.11    E
[redacted]  15175A  00D10 SHAKEDOWN                     FS   1.00  N     .67    E
MBPAE A  15175A  00F10 MOVE PARTS                     CQ   1.00  N     .67    E
[redacted]  15175A  00J10 MFG. SPLICES                  FS   1.00  N    1.00    E
MBPCB D  15175A  00P10 TOOL CRIB ATTENDANT            B3   1.00  N     .28    E
MTPAB 4  15175A  00Q10 CYLINDER ASSY 5-96715-5        DH   1.00  N    4.00    E
[redacted]  15175A  00R10 EOS CLEANUP                   FS   1.00  N    3.01    E
MBSCM A  15175A  00S15 MIC POOL                       CQ   1.00  N    1.35    E
MBPAE A  15175A  00T10 TOOL CRIB ATTENDANT            DQ   1.00  N     .67    E
MTPAB 3  15175A  00T30 CHECK,TEST & PURGE SYS   M257  AP   1.00  N    4.00    E
MBPCA 8  15175A  00W10 TOOL CRIB ATTENDANT            WL   1.00  N     .38    E
MBPCA 8  15175A  00X10 EOS CLEANUP                    WL   1.00  N     .58    E
MBPCB D  15175A  00Y10 EOS CLEANUP                    B3   1.00  N     .58    E
MBPCD 9  15175A  00Z10 EOS CLEANUP                    CQ   1.00  N     .41    E
MTPAB 3  15175A  ACV10 5-96715-1 RMV SCREWS           CW   1.00  N     .15    E

ENTER DATA AS NEEDED
 PROD ...ELSE 'END'
 <---->
?15178A
RCC  FAC PROD NO OPER  <-------DESCRIPTION-------->  SK   OCC  T/S  HOURS  TECH

MBPAB F  15178A  00B10 REPAIR OIL COOLER              FS   1.00  E   17.94   W
MBPCA 8  15178A  00C10 STRIP\WASH OIL COOLER          WL   1.00  N    4.03   E
MBPCB D  15178A  00C20 FIN WAS\PAINT                  B3   1.00  N    1.24   E
MBPCD 8  15178A  00C50 UNCRATE                        CQ   1.00  N     .44   E
MBPAB F  15178A  00D10 SHAKEDOWN                      FS   1.00  N     .56   E
MBPAE A  15178A  00F10 MOVE END ITEM                  CQ   1.00  N     .26   E
MBPAB F  15178A  00J10 MFG PRTS SUPP O\COOLER         FS   1.00  N    4.99   E
MBPCB D  15178A  00P10 OPERATE TOOL CRIB              B3   1.00  N     .11   E
MBPAB F  15178A  00R10 EOS CLEANUP                    FS   1.00  N     .47   E
MBSCM A  15178A  00S15 MIC POOL                       CQ   1.00  N     .21   E
MBPAE A  15178A  00T10 OPERATE TOOL CRIB              DQ   1.00  N     .26   E
MBPCA 8  15178A  00W10 OPERATE TOOL CRIB              WL   [redacted]
00X10 EOS CLEANUP                WL   1.00  N     .09   E
MBPCB D  15178A  00Y10 EOS CLEANUP
[redacted]          CQ   1.00  N     .06   E
MBPCA 8  15178A  SAW30 ABRASIV[redacted]
[redacted]601N AW   1.00  N     .44   E

ENTER DATA AS NEEDED
 PROD ...ELSE 'END'
 <---->
?15178A

15178A
RECORD NOT FOUND      \15178

ENTER DATA AS NEEDED
 PROD ...ELSE 'END'
 <---->
?15178A
RCC  FAC PROD NO OPER  <-------DESCRIPTION-------->  SK   OCC  T/S  HOURS  TECH

MBPAB F  15178A  00B10 REPAIR OIL COOLER              FS   1.00  E   17.94   W
MBPCA 8  15178A  00C10 STRIP\WASH OIL COOLER          WL   1.00  N    4.03   E
MBPCB D  15178A  00C20 FIN WAS\PAINT                  B3   1.00  N    1.24   E
MBPCD 8  15178A  00C50 UNCRATE                        CQ   1.00  N     .44   E
MBPAB F  15178A  00D10 SHAKEDOWN                      FS   1.00  N     .56   E
MBPAE A  15178A  00F10 MOVE END ITEM                  CQ   1.00  N     .26   E
MBPAB F  15178A  00J10 MFG PRTS SUPP O\COOLER         FS   1.00  N    4.99   E
MBPCB D  15178A  00P10 OPERATE TOOL CRIB              B3   1.00  N     .11   E
MBPAB F  15178A  00R10 EOS CLEANUP                    FS   1.00  N     .47   E
MBSCM A  15178A  00S15 MIC POOL                       CQ   1.00  N     .21   E
MBPAE A  15178A  00T10 OPERATE TOOL CRIB              DQ   1.00  N     .26   E
MBPCA 8  15178A  00W10 OPERATE TOOL CRIB
```



```
M      8  15178A  00W10 OPERATE TOOL CRIB                WL   1.0   N     .14   E
MBPCA 8  15178A  00X10 EOS CLEANUP                       WL   1.00  N     .09   E
MBPCB D  15178A  00Y10 EOS CLEANUP                       B3   1.00  N     .09   E
MBPCD 9  15178A  00Z10 EOS CLEANUP                       CQ   1.00  N     .06   E
MBPCA 8  15178A  SAW30 ABRASIVE BLAST OIL COOLER TA      WL   1.00  N     .40   E
MTPIW 6  15178A  WOZ11 50-2458-41 COOLE 35A002 601N      AW   1.00  N     .44   E

ENTER DATA AS NEEDED
 PROD ...ELSE 'END'
 <---->
?15153A
RCC  FAC PROD NO OPER  <-------DESCRIPTION--------> SK   OCC  T/S  HOURS  TECH

[redacted]  15153A  00B10 REPAIR WING FLAP QTBD          DS   1.00  E  119.73   W
[redacted]  15153A  00B20 [redacted]                     DS   1.00  N   15.00   T
MBPCA 8  15153A  00C10 STRIP & [redacted]                WL   1.00  N    8.91   E
MBPCB D  15153A  00C20 PAINT & FINAL WASH                B3   1.00  N    4.05   E
MBPCD 8  15153A  00C50 UNCRATE                           CQ   1.00  N    1.53   E
[redacted]
MQCIA 1  15153A  CIX10 5-87851-145 OB FLAP      506N     AI   1.00  N     .87   E

ENTER DATA AS NEEDED
 PROD ...ELSE 'END'
 <---->
?15188A
RCC  FAC PROD NO OPER  <-------DESCRIPTION--------> SK   OCC  T/S  HOURS  TECH

[redacted]
MBPCA 8  15188A  00C10 STRIP & WASH                      WL   1.00  N    8.91   E
MBPCB D  15188A  00C20 PAINT & FINAL WASH                B3   1.00  N    4.05   E
MBPCD 8  15188A  00C50 UNCRATE                           CQ   1.00  N    1.53   E
[redacted]
MBPAE A  15188A  00F10 MOVE END ITEMS                    CQ   1.00  N    1.10   E
MBPAB F  15188A  00J10 MFG MISC PARTS                    FS   1.00  N   13.00   E
MBPAB F  15188A  00K10 707 CONVERSION                    DS   1.00  N   42.00   E
MBPCB D  15188A  00P10 OPERATE TOOL CRIB                 B3   1.00  N     .45   E
[redacted]
MBSCM A  15188A  00S15 MIC POOL                          CQ   1.00  N    1.42   E
MBPAE A  15188A  00T10 OPERATE TOOL CRIB                 DQ   1.00  N    1.10   E
MBPCA 8  15188A  00W10 OPERATE TOOL CRIB                 WL   1.00  N     .62   E
MBPCA 8  15188A  00X10 EOS CLEANUP                       WL   1.00  N     .61   E
MBPCB D  15188A  00Y10 EOS CLEANUP                       B3   1.00  N     .61   E
MBPCD 9  15188A  00Z10 EOS CLEANUP                       CQ   1.00  N     .43   E
MQCIA 1  15188A  CIX10 5-87851-155 OB FLAP      506N     AI   1.00  N     .87   E

ENTER DATA AS NEEDED
 PROD ...ELSE 'END'
 <---->
?15189A
RCC  FAC PROD NO OPER  <-------DESCRIPTION--------> SK   OCC  T/S  HOURS  TECH

[redacted]  15189A  00B10 REPAIR WING FLAP QTBD          DS   1.00  E  119.73   W
[redacted]  15189A  00B20 [redacted]                     DS   1.00  N   15.00   T
MBPCA 8  15189A  00C10 STRIP & WASH                      WL   1.00  N    8.91   E
MBPCB D  15189A  00C20 PAINT & FINAL WASH                B3   1.00  N    4.05   E
MBPCD 8  15189A  00C50 UNCRATE                           CQ   1.00  N    1.53   E
[redacted]
MBPAE A  15189A  00F10 MOVE END ITEMS                    CQ   1.00  N    1.10   E
[redacted]  15189A  00J10 MFG MISC PARTS                 FS   1.00  N   13.00   E
[redacted]  15189A  00K10 707 CONVERSION                 DS   1.00  N   42.00   E
MBPCB D  15189A  00P10 OPERATE TOOL CRIB                 B3   1.00  N     .45   E
[redacted]  15189A  00R10 EOS CLEANUP                    DS   1.00  N    3.17   E
MBSCM A  15189A  00S15 MIC POOL                          CQ   1.00  N    1.42   E
MBPAE A  15189A  00T10 OPERATE TOOL CRIB                 DQ   1.00  N    1.10   E
MBPCA 8  15189A  00W10 OPERATE TOOL CRIB                 WL   1.00  N     .62   E
```

```
[illegible]
M[illegible] 8  15189A  00W10 OPERATE TOOL CRIB                WL   1.00  N    .62   E
MBPCA 8  15189A  00X10 EOS CLEANUP                       WL   1.00  N    .61   E
MBPCB D  15189A  00Y10 EOS CLEANUP                       B3   1.00  N    .61   E
MBPCD 9  15189A  00Z10 EOS CLEANUP                       CQ   1.00  N    .43   E
MQCIA 1  15189A  CIX10 5-87851-156 OB FLAP      506N AI   1.00  N    .87   E

ENTER DATA AS NEEDED
 PROD ...ELSE 'END'
 <---->
?15154A
RCC  FAC PROD NO OPER  <-------DESCRIPTION--------> SK   OCC  T/S  HOURS  TECH

[redacted]
MBPCA 8  15154A  00C10 STRIP & WASH                      WL   1.00  N   8.00   E
MBPCB D  15154A  00C20 PRIME & PAINT                     B3   1.00  N   3.06   E
MBPCD 8  15154A  00C50 UNCRATE                           CQ   1.00  N   1.53   E
[redacted]
MQCIA 1  15154A  CIX10 5-87851-146 OB FLAP      506N AI   1.00  N    .87   E

ENTER DATA AS NEEDED
 PROD ...ELSE 'END'
 <---->
?15151A
RCC  FAC PROD NO OPER  <-------DESCRIPTION--------> SK   OCC  T/S  HOURS  TECH

[redacted]
MBPCA 8  15151A  00C10 STRIP & WASH                      WL   1.00  N   9.90   T
MBPCB D  15151A  00C20 PRIME & PAINT                     B3   1.00  N   3.06   E
MBPCD 8  15151A  00C50 UNCRATE                           CQ   1.00  N   1.53   E
[redacted]
MQCIA 1  15151A  CIX10 5-86892-119 FLAP IB      506N AI   1.00  N    .87   E

ENTER DATA AS NEEDED
 PROD ...ELSE 'END'
 <---->
?15191AS
RCC  FAC PROD NO OPER  <-------DESCRIPTION--------> SK   OCC  T/S  HOURS  TECH

[redacted]
MBPCA 8  15191A  00C10 STRIP & WASH                      WL   1.00  N   8.91   E
MBPCB D  15191A  00C20 PAINT & FINAL WASH                B3   1.00  N   4.05   E
MBPCD 8  15191A  00C50 UNCRATE                           CQ   1.00  N   1.53   E
[redacted]
MBPAE A  15191A  00F10 MOVE END ITEMS                    CQ   1.00  N   1.16   E
[redacted]
MBPCB D  15191A  00P10 OPERATE TOOL CRIB                 B3   1.00  N    .47   E
[redacted]
MBSCM A  15191A  00S15 MIC POOL                          CQ   1.00  N   1.40   E
MBPAE A  15191A  00T10 OPERATE TOOL CRIB                 DQ   1.00  N   1.16   E
MBPCA 8  15191A  00W10 OPERATE TOOL CRIB                 WL   1.00  N    .65   E
MBPCA 8  15191A  00X10 EOS CLEANUP                       WL   1.00  N    .60   E
MBPCB D  15191A  00Y10 EOS CLEANUP                       B3   1.00  N    .60   E
MBPCD 9  15191A  00Z10 EOS CLEANUP                       CQ   1.00  N    .43   E
MQCIA 1  15191A  CIX10 5-86892-129 FLAP IB      506N AI   1.00  N    .87   E
MTPIT 1  15191A  TCZ10 9-62569-2&4 TRK KC-135   210N BJ   1.00  N    .33   E

ENTER DATA AS NEEDED
 PROD ...ELSE 'END'
 <---->
?15192A
RCC  FAC PROD NO OPER  <-------DESCRIPTION--------> SK   OCC  T/S  HOURS  TECH
```

| RCC | FAC | PROD NO | OPER | <-------DESCRIPTION--------> | SK | OCC | | HOURS | TECH |
|---|---|---|---|---|---|---|---|---|---|
| [redacted] | | | | | | | | | |
| MBPCA | 8 | 15192A | 00C10 | STRIP & WASH | WL | 1.00 | N | 8.91 | E |
| MBPCB | D | 15192A | 00C20 | PAIINT & FINAL WASH | B3 | 1.00 | N | 4.05 | E |
| MBPCD | 8 | 15192A | 00C50 | UNCRATE | CQ | 1.00 | N | 1.53 | E |
| MBPAB | F | 15192A | 00D10 | INSPECT | DS | 1.00 | N | 1.00 | E |
| MBPAE | A | 15192A | 00E10 | MOVE END ITEMS | CQ | 1.00 | N | 1.16 | E |
| [redacted] | | | | | | | | | |
| MBPCB | D | 15192A | 00P10 | OPERATE TOOL CRIB | B3 | 1.00 | N | .47 | E |
| [redacted] | | | | | | | | | |
| MBSCM | A | 15192A | 00S15 | MIC POOL | CQ | 1.00 | N | 1.40 | E |
| MBPAE | A | 15192A | 00T10 | OPERATE TOOL CRIB | DQ | 1.00 | N | 1.16 | E |
| MBPCA | 8 | 15192A | 00W10 | OPERATE TOOL CRIB | WL | 1.00 | N | .65 | E |
| MBPCA | 8 | 15192A | 00X10 | EOS CLEANUP | WL | 1.00 | N | .60 | E |
| MBPCB | D | 15192A | 00Y10 | EOS CLEANUP | B3 | 1.00 | N | .60 | E |
| MBPCD | 9 | 15192A | 00Z10 | EOS CLEANUP | CQ | 1.00 | N | .43 | E |
| MQCIA | 1 | 15192A | CIX10 | 5-86892-130 FLAP IB 506N | AI | 1.00 | N | .87 | E |

ENTER DATA AS NEEDED
PROD ...ELSE 'END'
<---->
?15152A

| RCC | FAC | PROD NO | OPER | <-------DESCRIPTION--------> | SK | OCC | T/S | HOURS | TECH |
|---|---|---|---|---|---|---|---|---|---|
| [redacted] | | | | | | | | | |
| MBPCA | 8 | 15152A | 00C10 | STRIP & WASH | WL | 1.00 | N | 9.90 | T |
| MBPCB | D | 15152A | 00C20 | PRIME & PAINT | B3 | 1.00 | N | 3.06 | E |
| MBPCD | 8 | 15152A | 00C50 | UNCRATE | CQ | 1.00 | N | 1.53 | E |
| MBPAB | F | 15152A | 00D10 | INSPECT FLAP | DS | 1.00 | N | .51 | E |
| [redacted] | | | | | | | | | |
| MQCIA | 1 | 15152A | CIX10 | 5-86892-120 RH IB FLAP 506N | AI | 1.00 | N | .87 | E |

ENTER DATA AS NEEDED
PROD ...ELSE 'END'
<---->
?15236A

| RCC | FAC | PROD NO | OPER | <-------DESCRIPTION--------> | SK | OCC | T/S | HOURS | TECH |
|---|---|---|---|---|---|---|---|---|---|
| [redacted] | | | | | | | | | |
| MBPCA | 8 | 15236A | 00C10 | STRIP\WASH\ANODIZE | WL | 1.00 | N | 9.00 | E |
| MBPCB | D | 15236A | 00C20 | FIN WASH\PNT SLEEVE | B3 | 1.00 | N | 4.25 | E |
| MBPCD | 8 | 15236A | 00C50 | UNCRATE SLEEVE | CQ | 1.00 | N | 2.00 | E |
| MBPAB | F | 15236A | 00R10 | EOS CLEANUP | FS | 1.00 | N | 4.50 | E |
| MBSCM | A | 15236A | 00S15 | MIC POOL | CQ | 1.00 | N | 2.02 | E |
| MBPCA | 8 | 15236A | 00X10 | EOS CLEANUP | WL | 1.00 | N | .87 | E |
| MBPCB | D | 15236A | 00Y10 | EOS CLEANUP | B3 | 1.00 | N | .87 | E |
| MBPCD | 9 | 15236A | 00Z10 | EOS CLEANUP | CQ | 1.00 | N | .61 | E |
| MTPIA | C | 15236A | ACZ10 | 65-10526 LINK ASSY 35A045 | AI | 1.00 | N | .06 | E |
| MQCIA | 1 | 15236A | CIX10 | 65-10505-269 SLEEVE AY | AI | 1.00 | N | 3.00 | E |
| MBPCA | 8 | 15236A | SAW30 | 65-10505-269 SLV ASSY 004N | WL | 1.00 | N | 4.68 | E |
| MTPIT | 1 | 15236A | TCZ10 | 65-10526 LINK ASSY 35A045 | BJ | 1.00 | N | .13 | E |
| MTPIW | 6 | 15236A | WCZ10 | 65-10505-269 135 AFT THR SLE | AW | 1.00 | N | 1.50 | E |
| MTPIW | 6 | 15236A | WCZ11 | 65-10505-5 HAT RING SECTION | AW | 1.00 | N | .63 | E |
| MTPIW | 6 | 15236A | WCZ12 | 65-10505-122 HAT RING SECT | AW | 1.00 | N | .63 | E |

ENTER DATA AS NEEDED
PROD ...ELSE 'END'
<---->
?15237A

| RCC | FAC | PROD NO | OPER | <-------DESCRIPTION--------> | SK | OCC | T/S | HOURS | TECH |
|---|---|---|---|---|---|---|---|---|---|
| MBPAB | F | 15237A | 00B10 | REPAIR FAIRING AFT 004N | FS | 1.00 | N | [illegible] | [illegible] |

```
MB[illegible] F  15237A  00B10 REPAIR FAIRING AFT        004N FS   1.00  N   [illegible]  E
MBPCA 8  15237A  00C10 WASH&STRIP.FAIRING AFT    004N WL   1.00  N    1.00  E
MBPCB D  15237A  00C20 FINAL WASH&PAINT FRNG AF004N B3   1.00  N    2.00  E
MBPCD 8  15237A  00C50 UNCRATE FAIRING AFT       004N CQ   1.00  N     .40  E
[redacted]  00D10 [redacted] 004N FS   1.00  N     .60  E
[redacted]  00J10 [redacted]  1.00  N    2.00  E

ENTER DATA AS NEEDED
 PROD ...ELSE 'END'
 <---->
?15249A
RCC  FAC PROD NO OPER  <-------DESCRIPTION--------> SK   OCC  T/S  HOURS  TECH

[redacted]  00B10 [redacted]  ES   1.00  E  107.16   W
MBPCA 8  15249A  00C10 STRIP & WASH AILERON     K262 WL   1.00  N   10.00  E
MBPCB D  15249A  00C20 PRIME & PAINT AILERON    K262 B3   1.00  N    5.04  E
MBPCD 8  15249A  00C50 UNCRATE AILERON          K262 CQ   1.00  N    2.52  E
[redacted]  K262 ES   1.00  N     .84  E
MBPAE A  15249A  00F10 MOVE PARTS                    CQ   1.00  N     .71  E
MBPCB D  15249A  00P00 TOOL CRIB ATTENDANT           B3   1.00  N     .29  E
[redacted]  ES   1.00  N    2.53  E
MBSCM A  15249A  00S15 MIC POOL                      CQ   1.00  N    1.14  E
MBPAE A  15249A  00T10 TOOL CRIB ATTENDANT           DQ   1.00  N     .71  E
MBPCA 8  15249A  00X10 EOS CLEANUP                   WL   1.00  N     .49  E
MBPCB D  15249A  00Y10 EOS CLEANUP                   B3   1.00  N     .49  E
MBPCD 9  15249A  00Z10 EOS CLEANUP                   CQ   1.00  N     .35  E
MTPIM 1  15249A  MCZ10 6-83219-2 SUPPORT 35A003      AJ   1.00  N     .79  E ?

ENTER DATA AS NEEDED
 PROD ...ELSE 'END'
 <---->
?15250A
RCC  FAC PROD NO OPER  <-------DESCRIPTION--------> SK   OCC  T/S  HOURS  TECH

MBPAB F  15250A  00B10 REPR AILERON OB               ES   1.00  E  107.16   W
MBPCA 8  15250A  00C10 STRIP & WASH AILERON     K262 WL   1.00  N   10.00  E
MBPCB D  15250A  00C20 PRIME & PAINT AILERON    K262 B3   1.00  N    5.04  E
MBPCD 8  15250A  00C50 UNCRATE AILERON          K262 CQ   1.00  N    2.52  E
MBPAB F  15250A  00D10 INSPECT AILERON          K262 ES   1.00  N    1.30  E
MBPAE A  15250A  00F10 MOVE PARTS                    CQ   1.00  N     .71  E
MBPCB D  15250A  00P10 TOOL CRIB ATTENDANT           B3   1.00  N     .40  E
MBPAB F  15250A  00R10 EOS CLEANUP                   ES   1.00  N    2.53  E
MBSCM A  15250A  00S15 MIC POOL                      CQ   1.00  N    1.14  E
MBPAE A  15250A  00T10 TOOL CRIB ATTENDANT           DQ   1.00  N     .71  E
MBPCA 8  15250A  00W10 TOOL CRIB ATTENDANT           WL   1.00  N     .40  E
MBPCA 8  15250A  00X10 EOS CLEANUP                   WL   1.00  N     .49  E
MBPCB D  15250A  00Y10 EOS CLEANUP                   B3   1.00  N     .49  E
MBPCD 9  15250A  00Z10 EOS CLEANUP                   CQ   1.00  N     .35  E
MTPIM 1  15250A  MCZ10 6-83219-2 SUPPORT 35A003      AJ   1.00  N     .79  E ?

ENTER DATA AS NEEDED
 PROD ...ELSE 'END'
 <---->
?15126A
RCC  FAC PROD NO OPER  <-------DESCRIPTION--------> SK   OCC  T/S  HOURS  TECH

MBPAB F  15126A  00B10 REPAIR DOOR ASSY MLG          FS   1.00  E   82.59   W
MBPCA 8  15126A  00C10 STRIP AND WASH DOOR      003N WL   1.00  N    3.45  E
MBPCB D  15126A  00C20 PAINT DOOR ASSY          003N B3   1.00  N   10.00  E
MBPCD 8  15126A  00C50 UNCRATE DOOR ASSY        003N CQ   1.00  N     .35  E
MBPAB F  15126A  00D10 INSPECT DOOR ASSY        003N FS   1.00  N    2.88  E
MBPAE A  15126A  00F10 MOVE PARTS                    CQ   1.00  N     .92  E
MBPCB D  15126A  00P10 TOOL CRIB ATTENDANT           B3   1.00  N     .37  E
MBPAB F  15126A  00R10 EOS CLEANUP                   FS   1.00  N    3.26  E
MBSCM A  15126A  00S15 MIC POOL                      CQ   1.00  N    1.47  E
MBPAE A  15126A  00T10 TOOL CRIB ATTENDANT           DQ   1.00  N     .92  E
MBPCA 8  15126A  00W10 TOOL CRIB ATTENDANT           WL   1.00  N     .52  E
MBPCA 8  15126A  00X10 EOS CLEANUP                   WL   1.00  N     .63  E
```

```
MBPCA B  15126A  00W10 TOOL CRIB ATTENDANT          WL    1.00  N     .52    E
MBPCA B  15126A  00X10 EOS CLEANUP                 WL    1.00  N     .63    E
MBPCB D  15126A  00Y10 EOS CLEANUP                 B3    1.00  N     .63    E
MBPCD 9  15126A  00Z10 EOS CLEANUP                 CQ    1.00  N     .45    E

ENTER DATA AS NEEDED
 PROD ...ELSE 'END'
 <---->
?15300A
RCC  FAC PROD NO OPER  <-------DESCRIPTION--------> SK   OCC  T/S  HOURS  TECH

MBPAB F  15300A  00B10 REPAIR DOOR ASSY M_        FS   1.00  E   92.30    W
MBPCA B  15300A  00C10 STRIP & WASH DOOR ASSY A340 WL   1.00  N    3.30    E
MBPCB D  15300A  00C20 PAINT DOOR ASSY        A340 B3   1.00  N   10.00    E
MBPCD B  15300A  00C50 UNCRATE DOOR ASSY      A340 CQ   1.00  N     .33    E
MBPAB F  15300A  00D10 INSPECT DOOR ASSY           FS   1.00  N    2.75    E
MBPAE A  15300A  00F10 MOVE PARTS                  CQ   1.00  N     .92    E
MBPCB D  15300A  00P10 TOOL CRIB ATTENDANT         B3   1.00  N     .37    E
MBPAB F  15300A  00R10 EOS CLEANUP                 FS   1.00  N    3.26    E
MBSCM A  15300A  00S15 MIC POOL                    CQ   1.00  N    1.47    E
MBPAE A  15300A  00T10 TOOL CRIB ATTENDANT         DQ   1.00  N     .92    E
MBPCA B  15300A  00W10 TOOL CRIB ATTENDANT         WL   1.00  N     .52    E
MBPCA B  15300A  00X10 EOS CLEANUP                 WL   1.00  N     .63    E
MBPCB D  15300A  00Y10 EOS CLEANUP                 B3   1.00  N     .63    E
MBPCD 9  15300A  00Z10 EOS CLEANUP                 CQ   1.00  N     .45    E

ENTER DATA AS NEEDED
 PROD ...ELSE 'END'
 <---->
```

```
?MBPAB15151A
RCC  FAC PROD NO OPER  <-------DESCRIPTION--------> SK   OCC  T/S  HOURS   TECH

MBPAB F  15151A  00B10 REPAIR WING FLAP INBD.       DS   1.00  E  117.72    W
MBPAB F  15151A  00B20 REPAIR FOREFLAP              DS   1.00  N   15.00    T
MBPAB F  15151A  00D10 INSPECT FLAP                 DS   1.00  N    1.00    E
MBPAB F  15151A  00J10 MFG MISC PARTS               FS   1.00  N   23.00    E

ENTER DATA AS NEEDED
 RCC  PROD  ...ELSE 'END'
 <---><----->
?MBPAB15152A
RCC  FAC PROD NO OPER  <-------DESCRIPTION--------> SK   OCC  T/S  HOURS   TECH

MBPAB F  15152A  00B10 REPAIR WING FLAP INBD.       DS   1.00  E  117.72    W
MBPAB F  15152A  00B20 REPAIR FOREFLAP              DS   1.00  N   16.50    T
MBPAB F  15152A  00D10 INSPECT FLAP                 DS   1.00  N     .51    E
MBPAB F  15152A  00J10 MFG MISC PARTS               FS   1.00  N   23.00    E

ENTER DATA AS NEEDED
 RCC  PROD  ...ELSE 'END'
 <---><----->
?MBPAB15191A
RCC  FAC PROD NO OPER   -------DESCRIPTION--------> SK   OCC  T/S  HOURS   TECH

MBPAB F  15191A  00B10 REPAIR WING FLAP INBD.       DS   1.00  E  117.72    W
MBPAB F  15191A  00B20 REPAIR FOREFLAP              DS   1.00  N   15.00    T
MBPAB F  15191A  00D10 INSPECT                      DS   1.00  N    1.00    E
MBPAB F  15191A  00J10 MFG MISC PARTS               FS   1.00  N   23.00    E
MBPAB F  15191A  00K10 707 CONVERSION               DS   1.00  N   42.00    E
MBPAB F  15191A  00R10 EOS CLEANUP                  DS   1.00  N    3.12    E

ENTER DATA AS NEEDED
 RCC  PROD  ...ELSE 'END'
 <---><----->
?MBPAB15192A
RCC  FAC PROD NO OPER  <-------DESCRIPTION--------> SK   OCC  T/S  HOURS   TECH

MBPAB F  15192A  00B10 REPAIR WING FLAP INBD.       DS   1.00  E  117.72    W
MBPAB F  15192A  00B20 REPAIR FORE FLAP            DS   1.00  N   15.00    E
MBPAB F  15192A  00D10 INSPECT                     DS   1.00  N    1.00    E
MBPAB F  15192A  00J10 MFG MISC PARTS               FS   1.00  N   23.00    E
MBPAB F  15192A  00K10 707 CONVERSION               DS   1.00  N   42.00    E
MBPAB F  15192A  00R10 EOS CLEANUP                  DS   1.00  N    3.12    E

ENTER DATA AS NEEDED
 RCC  PROD  ...ELSE 'END'
 <---><----->
```

INPUT AS | Δ'S TO BE MADE

[illegible]

| WCL# | IL# | DATE | WCL# | IL# | DATE |
|---|---|---|---|---|---|
| 15136A | 15136A | 88205 | 15136A | 15136A | 88055 |
| 15136A | 15136A | 88205 | 15136A | 15137A | 88055 |
| 15154A | 15158A | [illegible] | 15154A | " | " (same #[illegible]) |
| 15[illegible]5A | [illegible] | [illegible] | [illegible] | [illegible] | [illegible] |

only one were input on the 1st.

(Sorry, MAPPAB was entered [illegible] [illegible] [illegible] by mistake. If found this after everything had been entered, since there's no way to retrieve or edit info. I can only let you know so that you will be sure to ~~retrieve the file also~~. Hope this doesn't cause a problem.) I've found it nec. to use PCMAPPAI.CAT to cope my last days work to the original disk.

Bye, Peggy

DISK #4

| Acc. Total | WCD # | PCN # | WCD Date | TOTAL |
|---|---|---|---|---|
| 1 | 15025A | 15025A | 88054 | 1 |
| 1 | 15113A | 15113A | " | 1 |
| 39 | 15119A | 15119A | 88074 | 19 |
| | " | " | 88072 | 1 |
| | " | 15321A | 88074 | 19 |
| 2 | 15126A | 15126A | " | 1 |
| | " | 15300A | " | 1 |
| 28 | 15136A | 15136A | 87223 | 1 |
| | " | " | 88205 | 14 |
| | " | " | 88055 | 2 |
| | " | 15137A | " | 1 |
| | " | " | 88205 | 10 |
| | " | " | 87223 | 1 |
| 1 | 15137A | 15137A | 88205 | 1 |
| 1 | 15140A | 15140A | 88067 | 1 |
| 1 | 15150A | 15150A | 88054 | 1 |
| 1 | 15151A | 15191A | 87198 | 1 |
| 2 | 15153A | 15188A | 88055 | 1 |
| | " | 15189A | " | 1 |
| 3 | 15154A | " | 87059 | 1 |
| | " | 15188A | 88055 | 2 |
| 23 | 15175A | 15175A | 88069 | 19 |
| | " | " | 88203 | 4 |
| 1 | 15178A | 15178A | 88054 | 1 |
| 11 | 15222A | 15249A | 87258 | 1 |
| | " | 15249A | 88055 | 5 |
| | " | 15250A | 87258 | 1 |
| | | " | 88055 | 4 |
| 1 | 15244A | 15244A | 88205 | 1 |
| 1 | 15245A | 15245A | 88055 | 1 |
| 11 | 15249A | 15249A | " | 4 |
| | " | 15250A | " | 7 |
| 33 | 15178A | 15178A | 88054 | |
| 25 | 15151A | 15192A | | |
| 43 | 15152A | 15191A | | 23 |
| | " | 15192A | | 20 |

DISK 1

| | | |
|---|---|---|
| OC15113A.DAT | 15113A | 88054 |
| OCMABPAB.DAT | 15113A | 88054 |
| | 15119A | 88074 |
| OCMBPAB.DAT | 15236A | 88054 |
| | 15025A | 88054 |
| OCMBPBA.DAT | 15025A | 88054 |

DISK 2

| | | |
|---|---|---|
| OCMABPAB.DAT | 15113A | 88054 |
| | 15119A | 88074 |

DISK 3

| | | |
|---|---|---|
| OCMABPAB.DAT | 15119A | 88074 |

4-19-88

9999

| WCD | PCN | LAST OP. | DATE COMP |
|---|---|---|---|
| 15151A | 15192A | 06-23-88 | 06-23-88 |
| " | " | 06-28 | 06-28 |
| " | " | 08-10 | 08-10 |
| " | " | 08-17 | 08-16 — 17 or 18 |
| " | " | 08-22 | 08-22 |
| " | " | " | " |
| " | " | 08-24 | 08-24 |
| " | " | 08-25 | 08-24 |
| " | " | 08-26 | 08-26 |
| " | " | 09-07 | 09-06 |
| " | " | 09-13 | 09-13 |
| " | " | 09-17 | 09-17 |
| " | " | 09-21 | 09-21 |
| " | " | 09-29 | 09-28 |
| " | " | " | 09-27 |
| 15152A | 15192A | 06-23-88 | 06-23-88 |
| " | " | 06-28 | 06-28 |
| " | " | 08-10 | |
| " | " | 08-17 | 08-17 |
| " | " | 08-22 | 08-22 |
| " | " | " | " |
| " | " | 08-24 | 08-24 |
| " | " | 08-26 | 08-26 |
| " | " | 09-06 | 09-07 |
| " | " | 09-13 | 09-13 |
| " | " | 09-17 | 09-17 |
| " | " | 09-21 | 09-21 |
| " | " | 09-29 | 09-29 |
| " | " | 09-27 | " |
| 15152A | 15191A | 06-28-88 | 06-28-88 |
| " | " | 08-10 | |
| " | " | 08-16 | 08-17 |
| " | " | 08-22 | 08-22 |
| " | " | " | " |
| " | " | 08-24 | 08-24 |
| " | " | " | 08-25 |
| " | " | 08-26 | 08-26 |

| WCD | ACN | LAST OP | DATE COMP |
|---|---|---|---|
| 15152A | 15192A | 09.06.88 | 09.07.88 |
| " | " | 09.13 | 09.13 |
| " | " | 09.21 | 09.21 |
| " | " | 09.27 | 09.29 |
| " | " | 09.28 | 09.29 |

4-18-88

| | | | |
|---|---|---|---|
| 15151A | 15192A | 07.18.88 | 07.18.88 |
| " | " | 07.25 | 07.26 |
| " | " | 01.11.89 | 01.11.89 |
| " | " | 01.30 | 01.30 |
| " | " | 01.31 | 01.31 |
| " | " | 02.09 | 02.09 |
| " | " | 02.15 | 02.16 |
| " | " | 03.13 | 03.14 |
| " | " | 03.24 | 03.27 |
| " | " | 04.04 | 03.30 |
| 15152A | 15151A | 07.18.88 | 07.18.88 |
| " | " | 07.25 | 07.26 |
| " | " | 01.11.89 | 01.11.89 |
| " | " | 01.30 | 01.30 |
| " | " | 01.31 | |
| " | " | 02.01 | |
| " | " | 02.09 | |
| " | " | 02.16 | |
| " | " | 03.24 | |
| " | " | 04.04 | |
| 15152A | 15152A | 07.18.88 | 07.18.88 |
| " | " | 07.25 | 07.26 |
| " | " | 01.11.89 | |
| " | " | 01.30. | 01.30.89 |
| " | " | 01.31 | |
| " | " | 02.09 | |
| " | " | 03.24 | |

| WCD | PCN | LAST OP | DATE COMP |
|---|---|---|---|
| 1512GA | 1512GA | 10-19-88 | 10-20-88 |
| " | " | 10-25 | 10-26- |
| " | " | 10-28 | 10-28 |
| " | " | 10-02 | 11-03 |
| " | " | 11-07 | 11-07 |
| " | " | 11-14 | 11-14 |
| " | " | 11-18 | 11-18 |
| " | " | 11-22 | 11-25 |
| " | " | 11-28 | 11-28 |
| " | " | 11-28 | 11-28 |
| " | " | 11-30 | 11-29 |
| " | " | 12-05 | 12-05 |
| " | " | 12-07 | 12-07 |
| " | " | 12-09 | 12-09 |
| " | " | 12-13 | 12-13 |
| " | " | 12-15 | 12-15 |
| " | " | 12-28 | 12-28 |
| " | " | 12-29 | 12-29 |
| " | " | 12-30 | 12-30 (PAPERWORK LOST - NO DATES) |
| 1512GA | 1530DA | 10-03-88 | 10-07-88 (CONDEMNED) |
| " | " | 10-19 | 10-20 |
| " | " | 10-25 | 10-26 |
| " | " | 10-28 | 10-28 |
| " | " | 10-02 | 11-03 |
| " | " | 11-07 | 11-07 |
| " | " | 11-14 | 11-14 |
| " | " | 11-18 | 11-18 |
| " | " | 11-22 | 11-25 |
| " | " | 11-28 | 11-28 |
| " | " | 11-28 | 11-28 |
| " | " | 11-30 | 11-29 |
| " | " | 12-05 | 12-05 |
| " | " | 12-07 | 12-07 |
| " | " | 12-09 | 12-09 |
| " | " | 12-13 | 12-13 |
| " | " | 12-28 | 12-28 |
| " | " | 12-29 | 12-29 |
| " | " | 12-30 | 12-30 |

| WCD | PCN | LAST OP | DATE COMP | |
|---|---|---|---|---|
| 15140A | 15140A | 12-01-88 | 12-01-88 | |
| " | " | 12-05 | 12-05 | |
| " | " | " | " | |
| " | " | 12-07 | 12-07 | |
| " | " | " | " | |
| " | " | 12-09 | 12-09 | |
| " | " | 12-13 | 12-13 | |
| " | " | " | " | |
| " | " | 12-15 | 12-15 | |
| " | " | " | " | |
| " | " | 12-16 | 12-16 | |
| " | " | 12-19 | 12-20 | |
| " | " | 12-22 | 12-22 | |
| " | " | 12-23 | 12-23 | |
| " | " | " | " | |
| " | " | 12-28 | 12-29 | |
| " | " | 12-28 | " | |
| " | " | " | 12-28 | |
| " | " | 12-16 | 12-15 | (PAPERWORK LOST - NO DATES) |
| " | " | " | " | |
| " | " | " | " | |
| 15025A | 15025A | 09-21 | 09-21 | |
| " | " | 09-27 | 09-27 | |
| " | " | 09-27 | 09-27 | |
| " | " | 09-27 | 09-27 | |
| " | " | 09-27 | 09-29 | |
| " | " | 09-30 | 09-30 | |
| " | " | 10-03 | 10-03 | |
| " | " | " | " | |
| " | " | " | " | |
| " | " | " | " | |
| " | " | " | " | |
| " | " | 01-12-89 | 01-12-89 | |
| " | " | 01-18- | 01-18 | |
| " | " | " | " | |
| " | " | 01-23 | 01-23 | |
| " | " | 01-26 | 01-26 | |

| WCD | PCN | LAST QP | DATE COMP |
|---|---|---|---|
| 15025A | 15025A | N-30-89 | 01-27-89 |
| " | " | 02-07 | 02-07 |
| " | " | 02-09 | 02-09 |
| " | " | 02-10 | 02-17 |
| " | " | " | " |
| " | " | 03-01 | 02-27 |
| " | " | 02-27 | 03-01 |
| " | " | 02-27 | 03-01 |
| " | " | 03-03 | 03-03 |
| " | " | 03-13 | 03-14 |
| " | " | " | " |
| " | " | 03-20 | 03-20 |
| " | " | 03-24 | 03-24 |
| " | " | 03-27 | 03-27 |
| " | " | " | " |
| 15150A | 15150A | 09-09-88 | 09-09-88 |
| " | " | 09-13 | 09-13 |
| " | " | 09-14 | 09-14 |
| " | " | 09-21 | 09-26 |
| " | " | 09-30 | 09-30 |
| " | " | 01-11-89 | 01-12-89 |
| " | " | 01-18 | 01-19- |
| " | " | | 01-30 (CONDEMNED) |
| " | " | 01-31 | 01-31 |
| " | " | 02-03 | 02-03 |
| " | " | " | " |
| " | " | " | " |
| " | " | 02-21 | 02-21 |
| " | " | 02-23 | 02-23 |
| " | " | 03-09 | 03-09 |
| " | " | 03-15 | 03-15 |
| " | " | " | " |
| " | " | 03-17 | 03-17 |
| " | " | " | " |
| " | " | " | " |
| " | " | 03-22 | 03-22 |
| " | " | 03-27 | 03-27 |
| " | " | " | " |

| WCD | PCN | LAST OP | DATE COMP | |
|---|---|---|---|---|
| 15150A | 16150A | 03-28-89 | 03-27-89 | |
| " | " | " | " | |
| " | " | 03-29- | 03-29 | |
| " | " | " | " | |
| " | " | " | " | |
| " | " | 03-30 | 03-30 | |
| " | " | " | 03-30 | |
| " | " | 03-29 | " | |
| 15113A | 15113A | | 02-21-89 | (CONDEMNED) |
| " | " | 09-12-88 | 09-12-88 | |
| " | " | 09-21- | 09-21 | |
| " | " | 09-22 | 09-22 | |
| " | " | 09-29 | 09-29 | |
| " | " | 10-01 | 10-03 | |
| " | " | 01-13-89 | 01-12-89 | |
| " | " | " | " | |
| " | " | 01-20 | 01-20 | |
| " | " | 01-23 | 01-23 | |
| " | " | " | " | |
| " | " | 01-26 | 01-26 | |
| " | " | 01-30 | 01-27 | |
| " | " | 02-07 | 02-07 | |
| " | " | " | " | |
| " | " | 02-08 | 02-08 | |
| " | " | 02-09 | 02-09 | |
| " | " | 02-21 | 02-21 | |
| " | " | 03-01 | 03-01 | |
| " | " | 03-13 | 03-14 | |
| " | " | " | " | |
| " | " | " | " | |
| " | " | " | " | |
| " | " | 03-16 | 03-16 | |
| " | " | 03-21 | 03-21 | |
| " | " | " | " | |
| " | " | 03-24 | 03-24 | |
| " | " | " | " | |
| " | " | 03-27 | 03-27 | |

| WCD | ACN | LAST OP | DATE COMP |
|---|---|---|---|
| 15113A | 15113A | 03-31-89 | 03-30-89 |
| " | " | " | " |
| 15315A | | 01-19-89 | 01-19-89 |
| 15236A | | 12-20-88 | 12-20-88 |
| " | | " | 12-20 |
| " | 15236A | 01-20-89 | 01-20-89 |
| " | | 02-02-89 | 02-02-89 |
| " | | 02-22 | 02-22 |
| " | " | 02-24 | 03-01- |
| " | | 03-01 | " |
| " | | 03-02 | 03-02 |
| " | | 03-10 | 03-13 |
| " | | 03-14 | 03-14 |
| " | | 03-22 | 03-22 |
| " | | 03-30 | 03-30 |
| 15178A | 15178A | 10-11-88 | 10-11-88 |
| " | " | " | " |
| " | " | 10-21-88 | 10-19-88 |
| " | " | 10-19- | " |
| " | " | " | " |
| " | " | 11-14 | 11-14 |
| " | " | " | 11-14 |
| " | " | " | " |
| " | " | 11-15 | 11-15 |
| " | " | " | " |
| " | " | 11-29 | 11-29 |
| " | " | " | " |
| " | " | " | " |
| " | " | 12-13 | 12-13 |
| " | " | 12-15 | 12-15 |
| " | " | 12-16 | 12-16 |
| " | " | " | " |
| " | " | 12-22 | 12-22 |
| " | " | 12-23 | 12-23 |
| " | " | 12-28 | 12-27 |
| " | " | 01-06-89 | 01-06-89 |
| " | " | " | " |
| " | " | 01-09 | 01-09- |

| WCD | PCN | LAST OP | DATE COMP |
|---|---|---|---|
| 15178A | 15178A | 01-09-89 | 01-09-89 |
| " | " | 01-11- | 01-11- |
| " | " | 01-19 | 01-19 |
| " | " | 01-20 | 01-24 |
| " | " | 02-03 | 02-03 |
| " | " | 02-13 | 02-15 |
| " | " | 02-21 | 02-21 |
| " | " | " | " |
| " | " | 02-22 | 02-22 |
| " | " | 03-03 | 03-03 |
| 15237A | 15237A | 12-28-88 | 12-27-88 |
| " | " | 12-01 | 12-01 (PAPERWORK LOST) |

TOTALS -

| | | | |
|---|---|---|---|
| 15178A - 33 | | | |
| 15237A - 2 | | → | 4 |
| 15315A - 1 | | | |
| 15236A - 12 | | → | 6 |
| 15025A - 31 | (1 CONDEMNED) | → | 27 + 9. |
| 15150A - 31 | (1 CONDEMNED) | → | 35 |
| 15113A - 31 | (1 CONDEMNED) | → | 53. |
| 15126A - 38 | (2 - NO DATES) | → | 35 |
| 15140A - 21 | (3 - NO DATES) | → | 18 |
| 15151A - 25 | | | |
| 15152A - 44 | | | |
| 15119A - | | → | 25 |

178
151
152 ✓

237
236

113. ✓

OC - MABPAB

| PCN | WCD |
|---|---|
| ********** | ********* |
| 15025A | 15025A |
| 15113A | 15113A |
| 15119A | 15119A |
| 15126A | 15126A |
| 15136A | 15136A |
| 15137A | 15136AA |
| 15140A | 15140A |
| 15150A | 15150A |
| 15175A | 15175A |
| 15178A | 15178A |
| 15188A | 15153A |
| 15188ASUB1 | 15154A |
| 15189ASUB1 | 15154AA |
| 15189A | 15153AA |
| 15191A | 15151A |
| 15191ASUB1 | 15152A |
| 15192A | 15151AA |
| 15192ASUB1 | 15152AA |
| 15236A | 15236A |
| 15237ASUB1 | 15236B |
| 15237A | 15237A |
| 15249A | 15249A |
| 15250A | 15249AA |
| 15300A | 15126AA |
| 15321A | 15119AA |

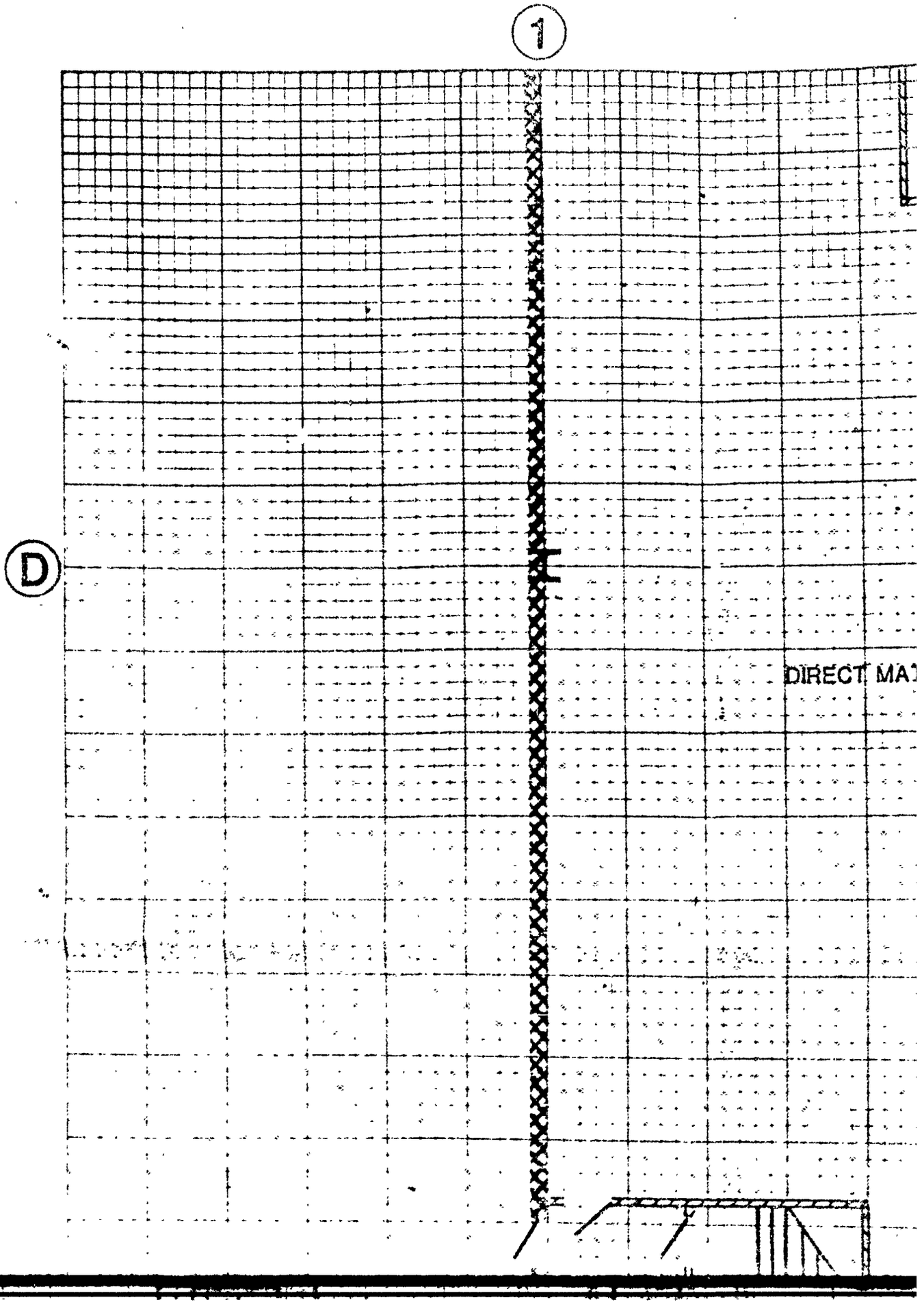
1
D
DIRECT MA

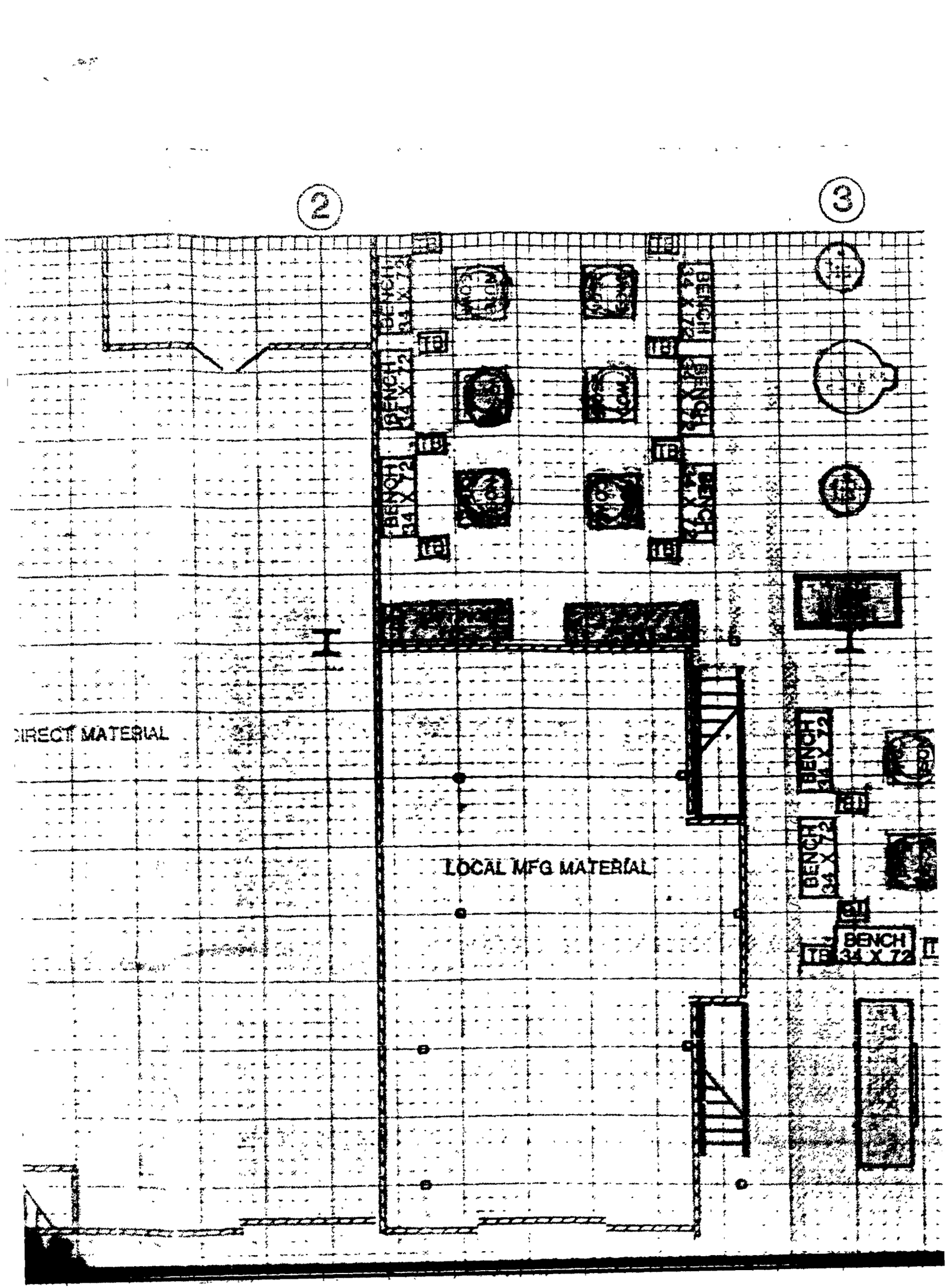
2
3
BENCH 34 X 72
TB
DIRECT MATERIAL
LOCAL MFG MATERIAL

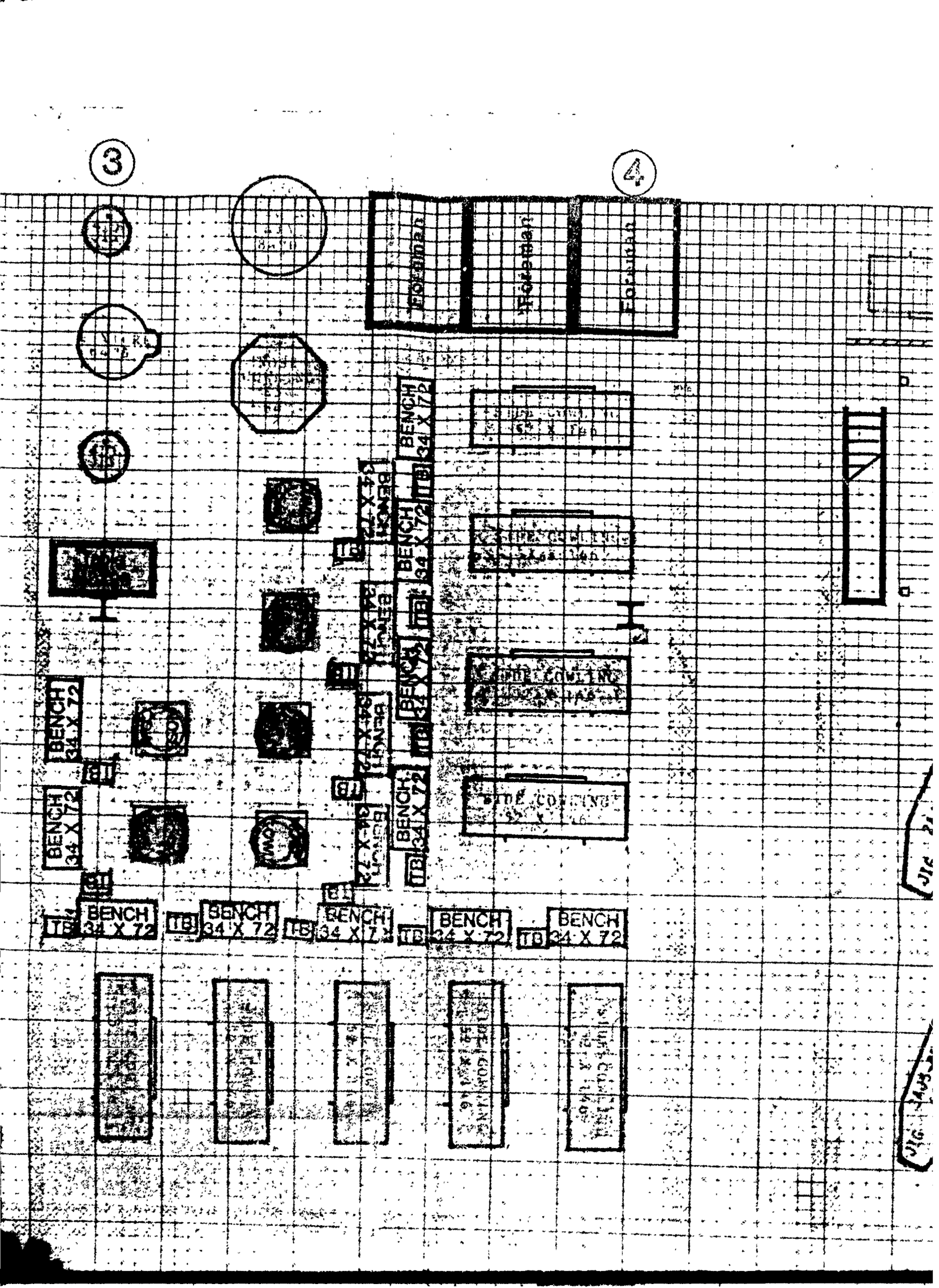
3
4
Foreman
Foreman
Foreman
BENCH 34 X 72
TB
BENCH 34 X 72
TB
BENCH 34 X 72
TB

5

BENCH 34 X 72

BENCH 34 X 72

BENCH 34 X 72

SIDE COWLING 52 X 146

SIDE COWLING 52 X 146

SIDE COWLING 52 X 146

SIDE COWLING 52 X 146

SIDE COWLING 52 X 146

FIXTURE

FIXTURE

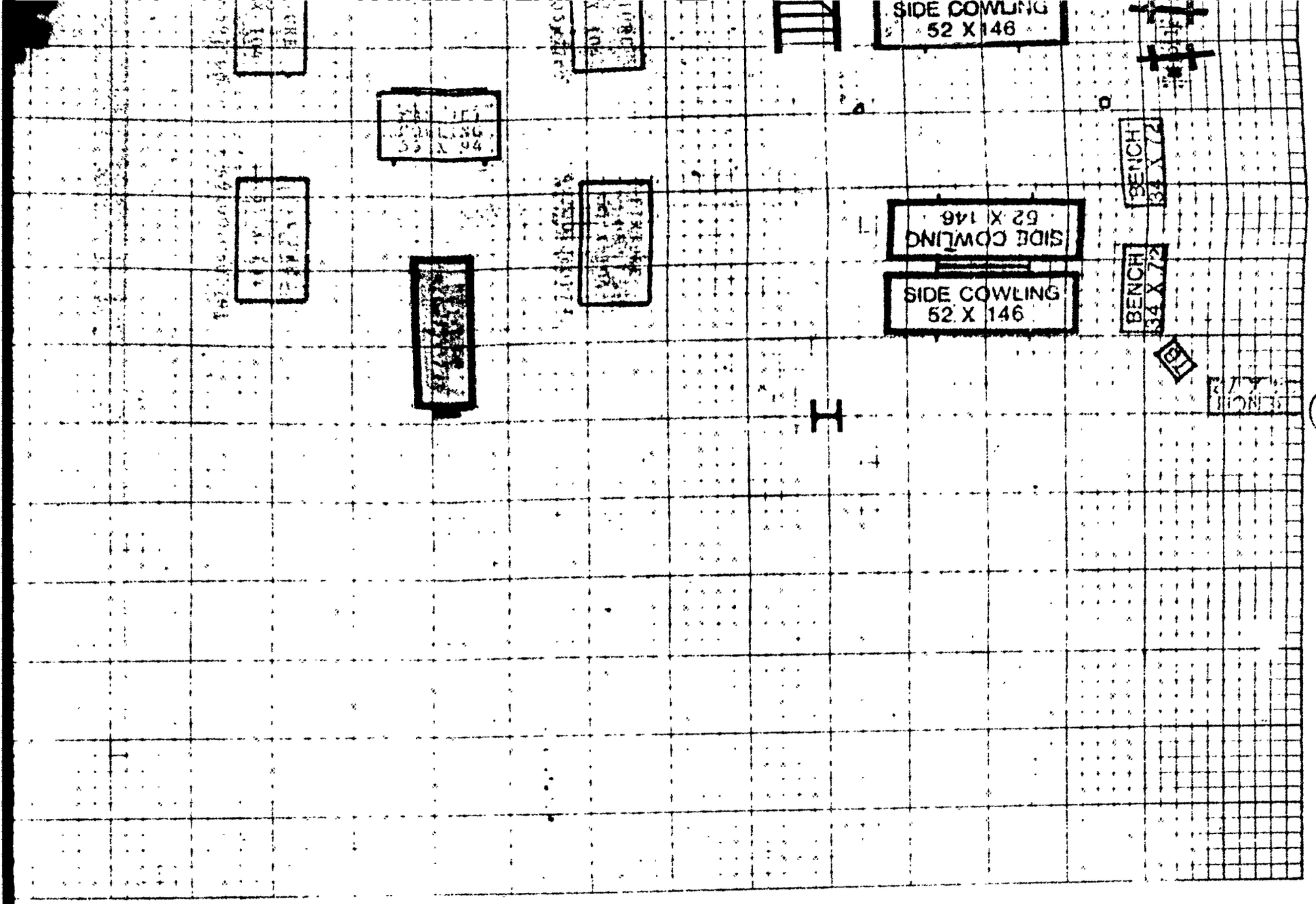
SIDE COWLING
52 X 146
BENCH
34 X 72
SIDE COWLING
52 X 146
BENCH
34 X 72
B1

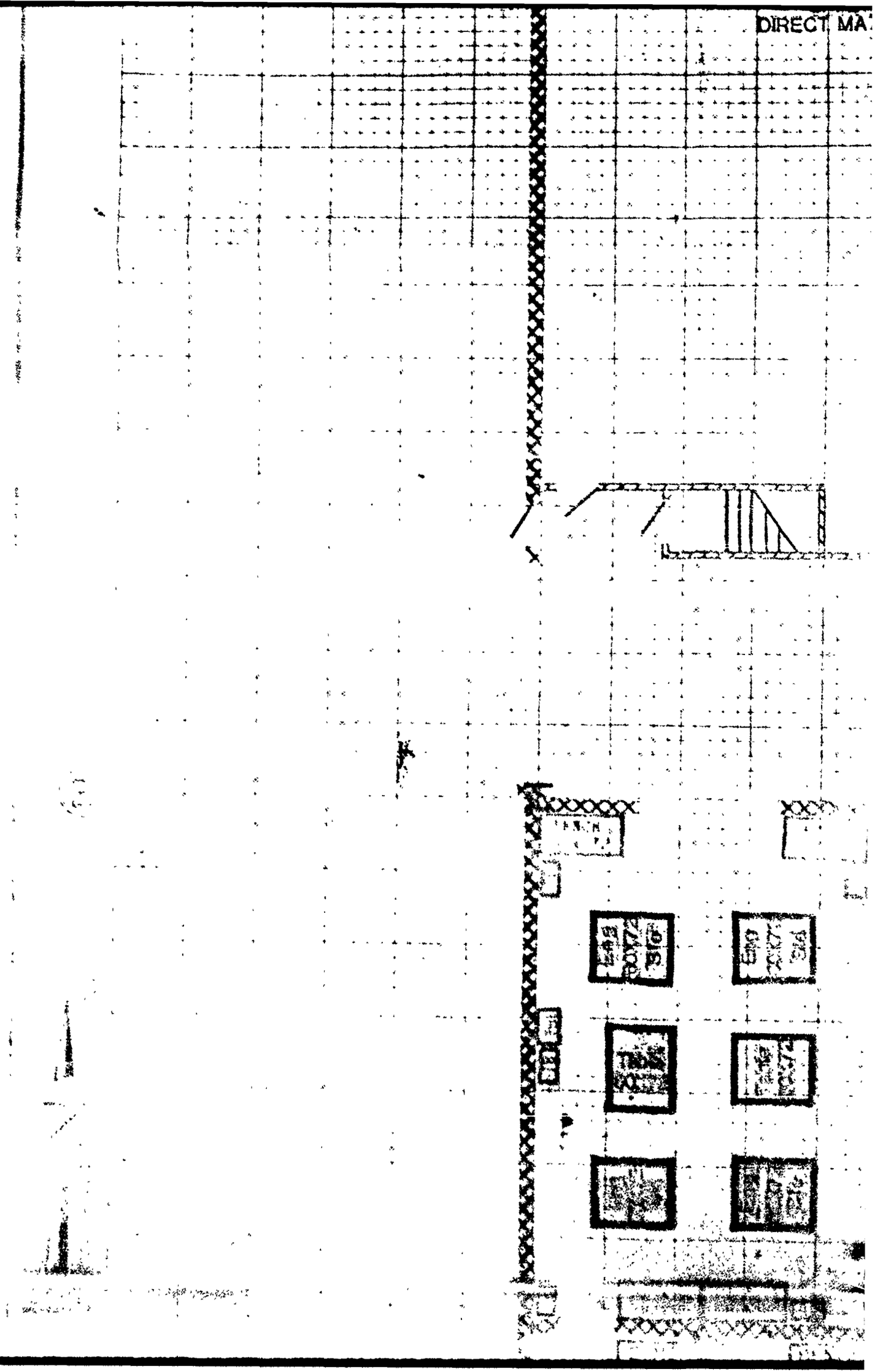
DIRECT MA

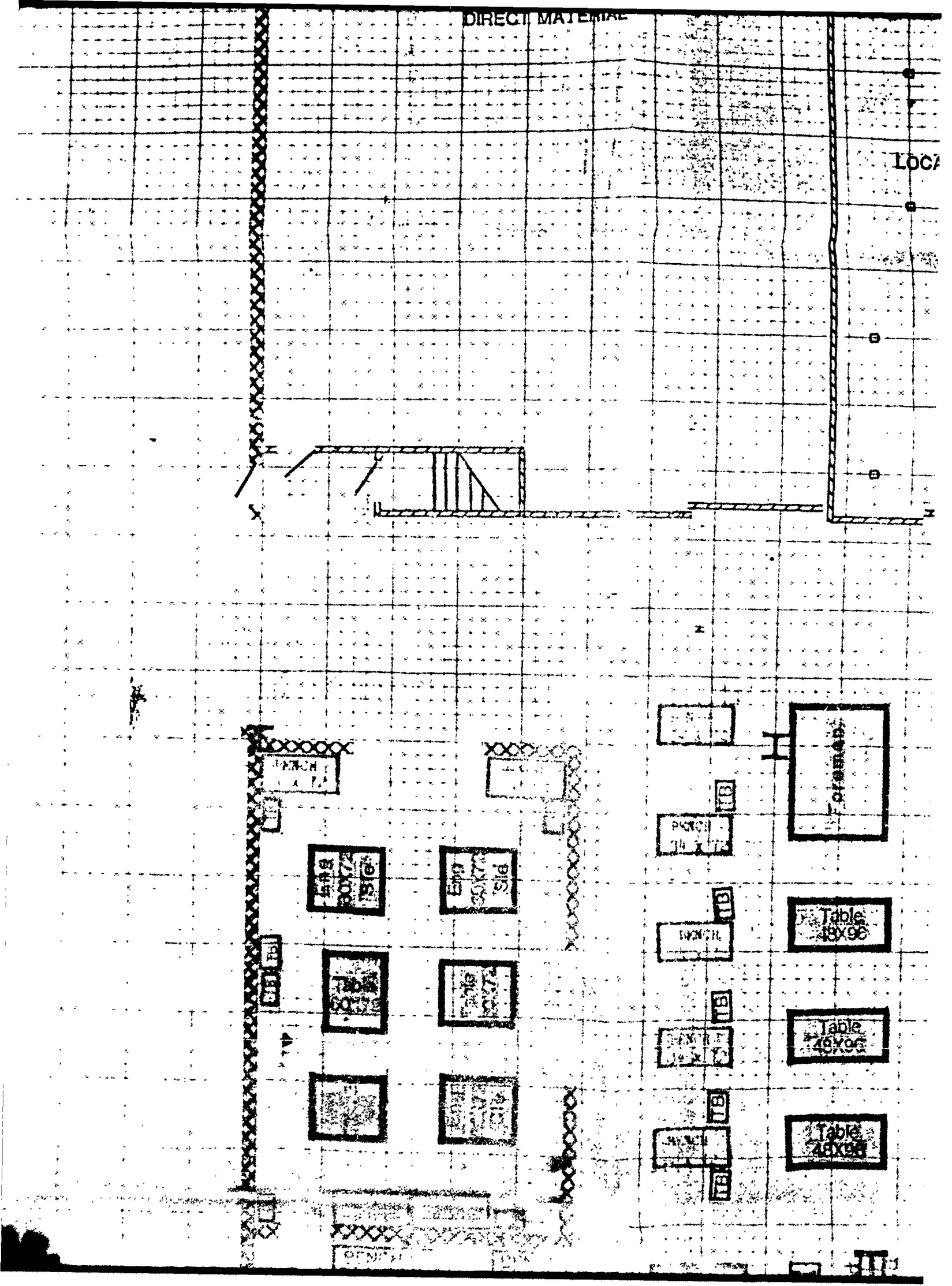
DIRECT MATERIAL
LOCA
Table
48X96
Table
48X96
Table
48X96

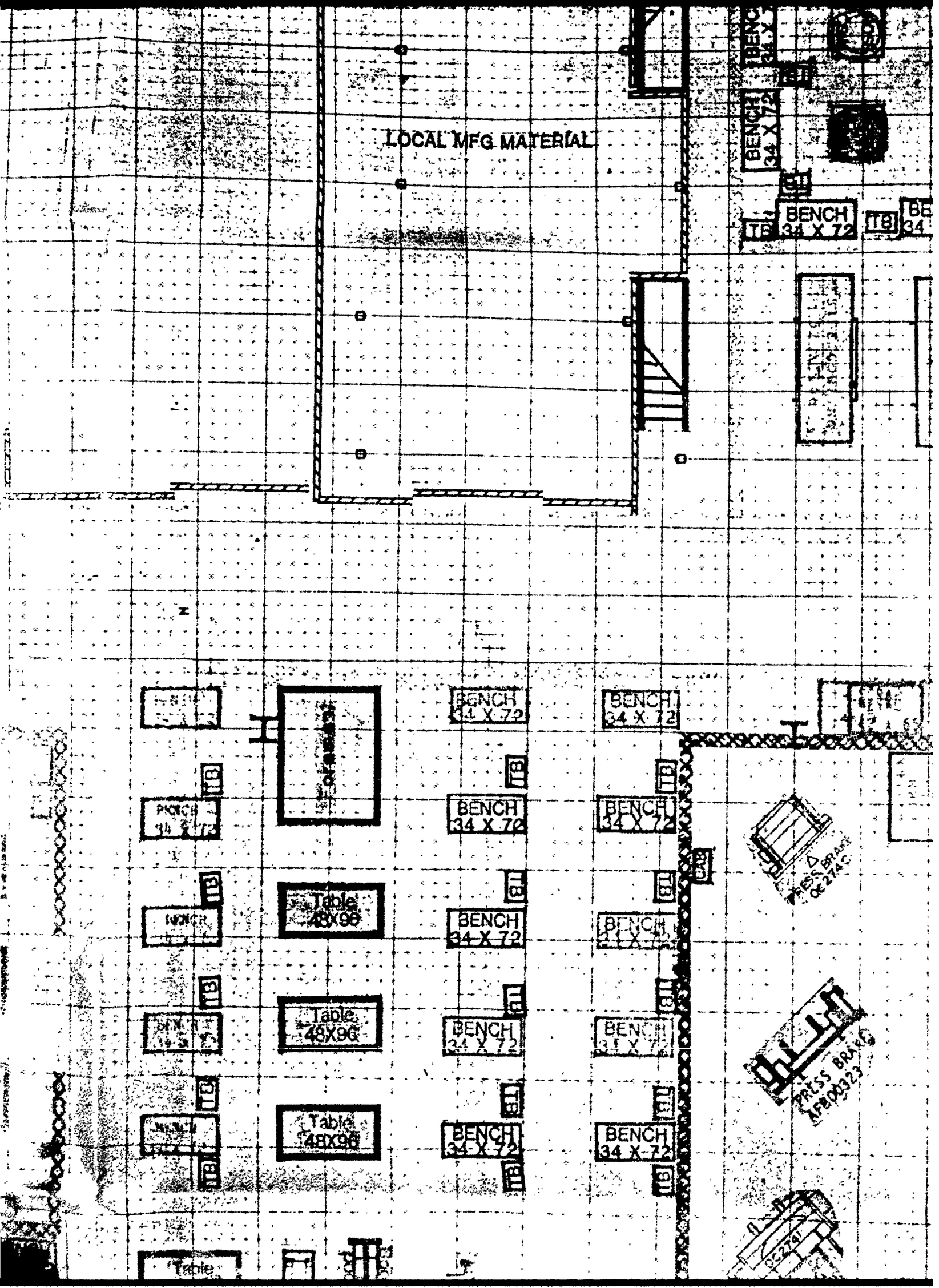
LOCAL MFG MATERIAL
BENCH 34 X 72
TB
BENCH 34 X 72
BENCH 34 X 72
BENCH 34 X 72
BENCH 34 X 72
BENCH 34 X 72
BENCH 34 X 72
BENCH 34 X 72
BENCH 34 X 72
BENCH 34 X 72
BENCH 34 X 72
Table 48X96
Table 48X96
Table 48X96
PRESS BRAKE
PRESS BRAKE
Table

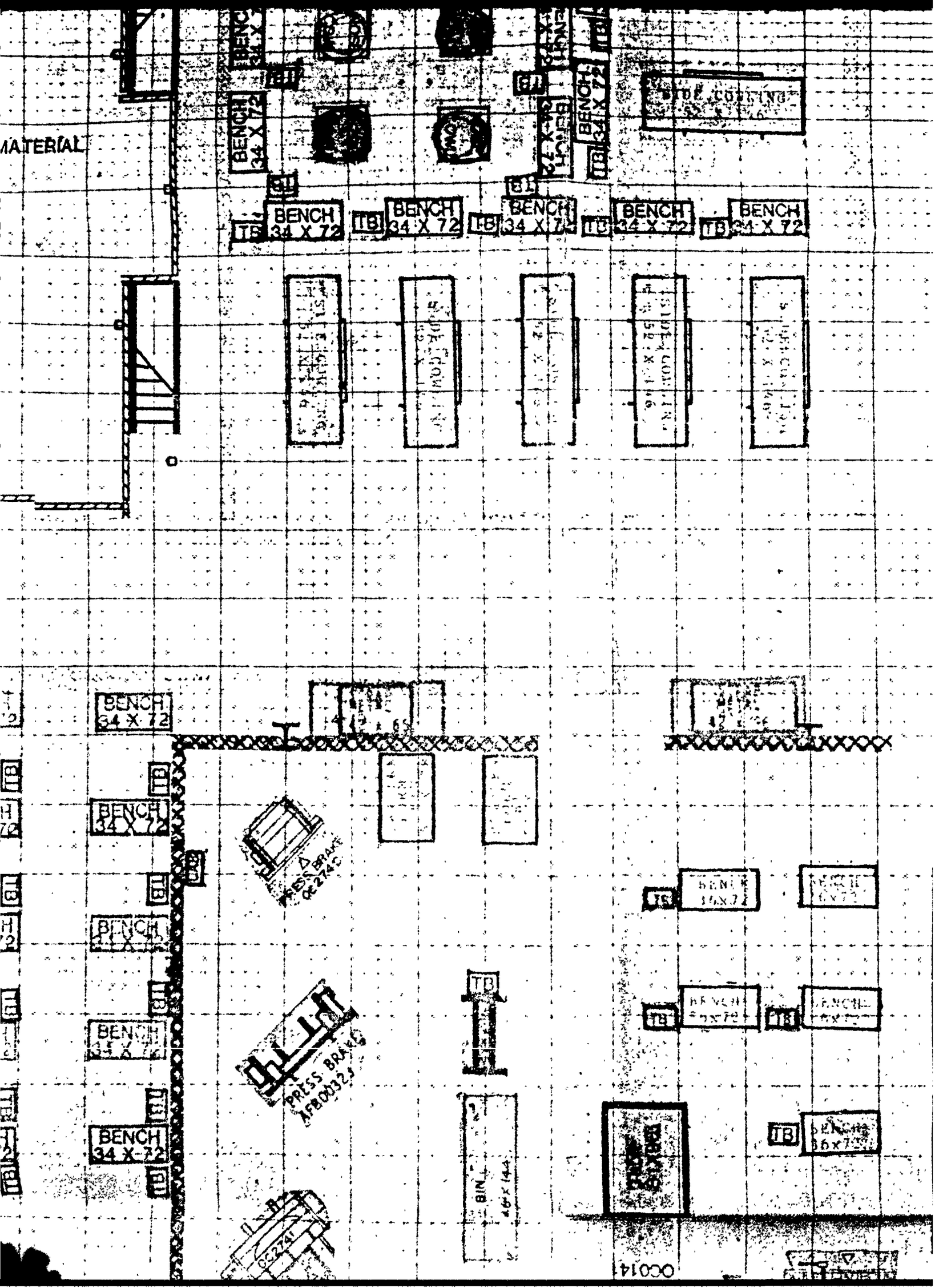
MATERIAL
BENCH 34 X 72
TB
BENCH 34 X 72
TB
BENCH 34 X 72
TB

BENCH 34 X 72

TB

BENCH 34 X 72

BENCH 34 X 72

MLG DOOR

FIXTURE

BENCH 34 X 72

BENCH 34 X 72

MLG DOOR

FIXTURE

TB

TB

TB

MLG DOOR

FIXTURE

MLG DOOR

FIXTURE

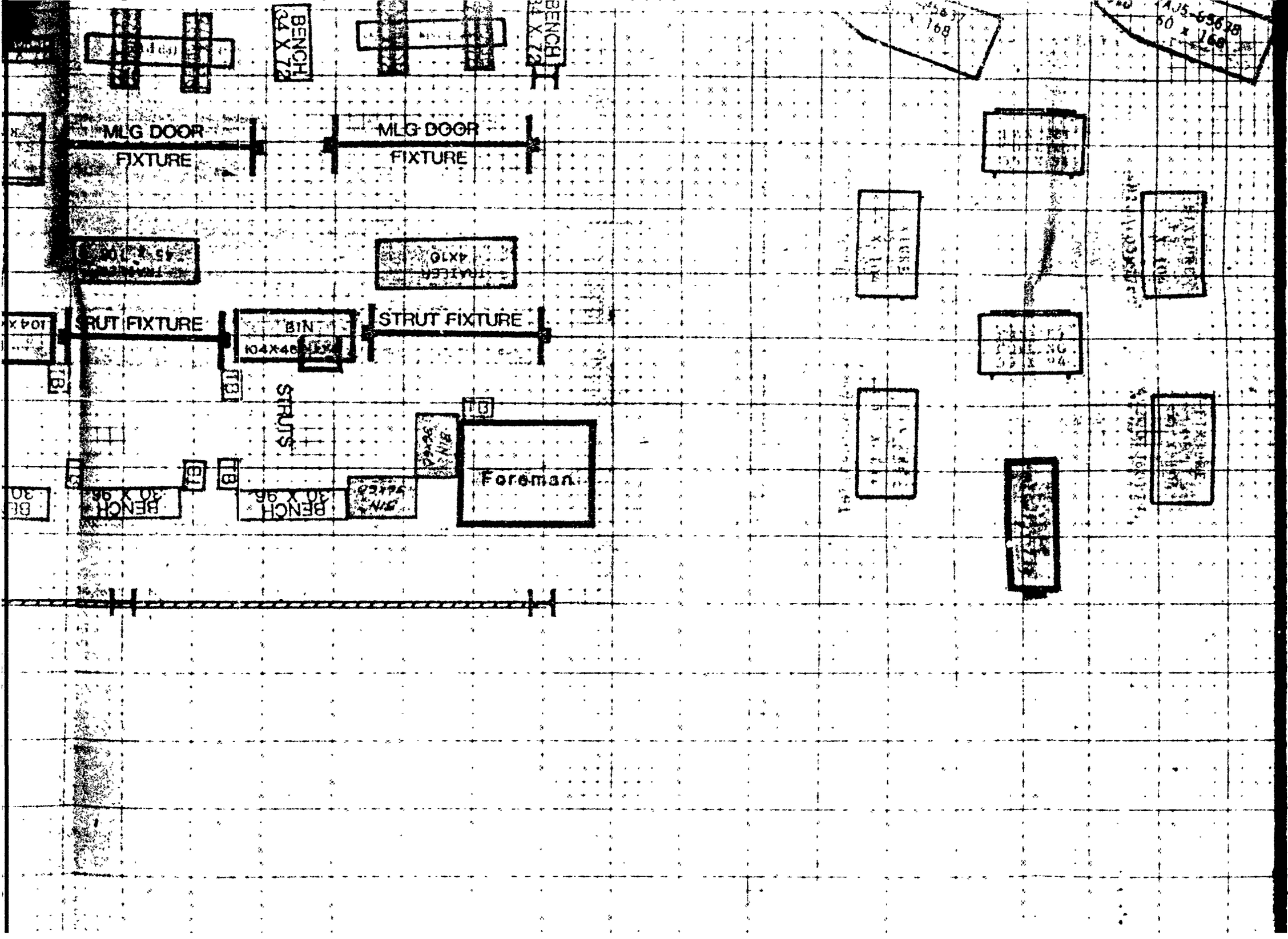
MLG DOOR
FIXTURE
MLG DOOR
FIXTURE
STRUT FIXTURE
BIN
STRUT FIXTURE
STRUTS
Foreman
BENCH
BENCH

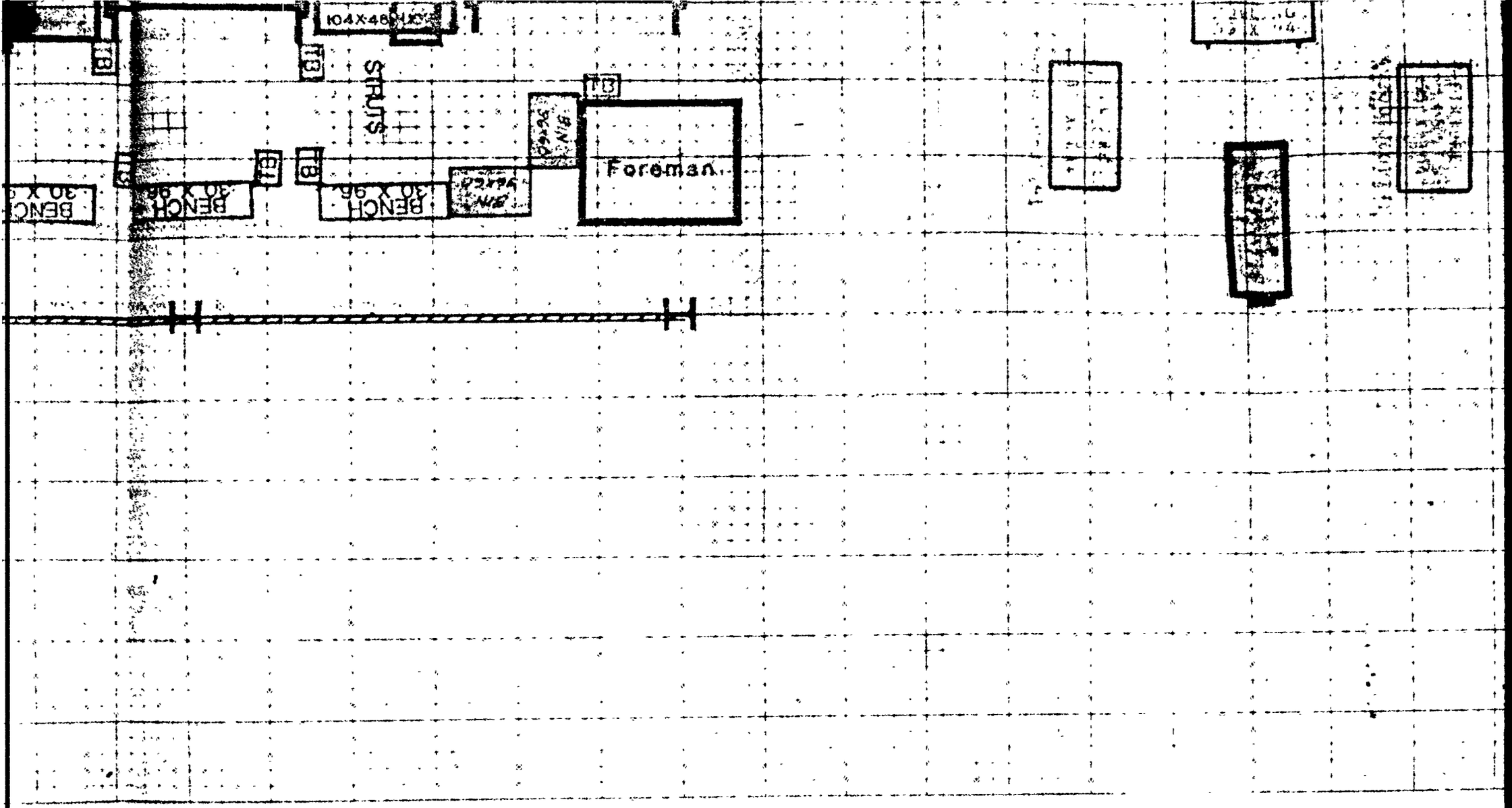
STRUTS
Foreman
BENCH
BENCH

BENCH
BENCH
BENCH

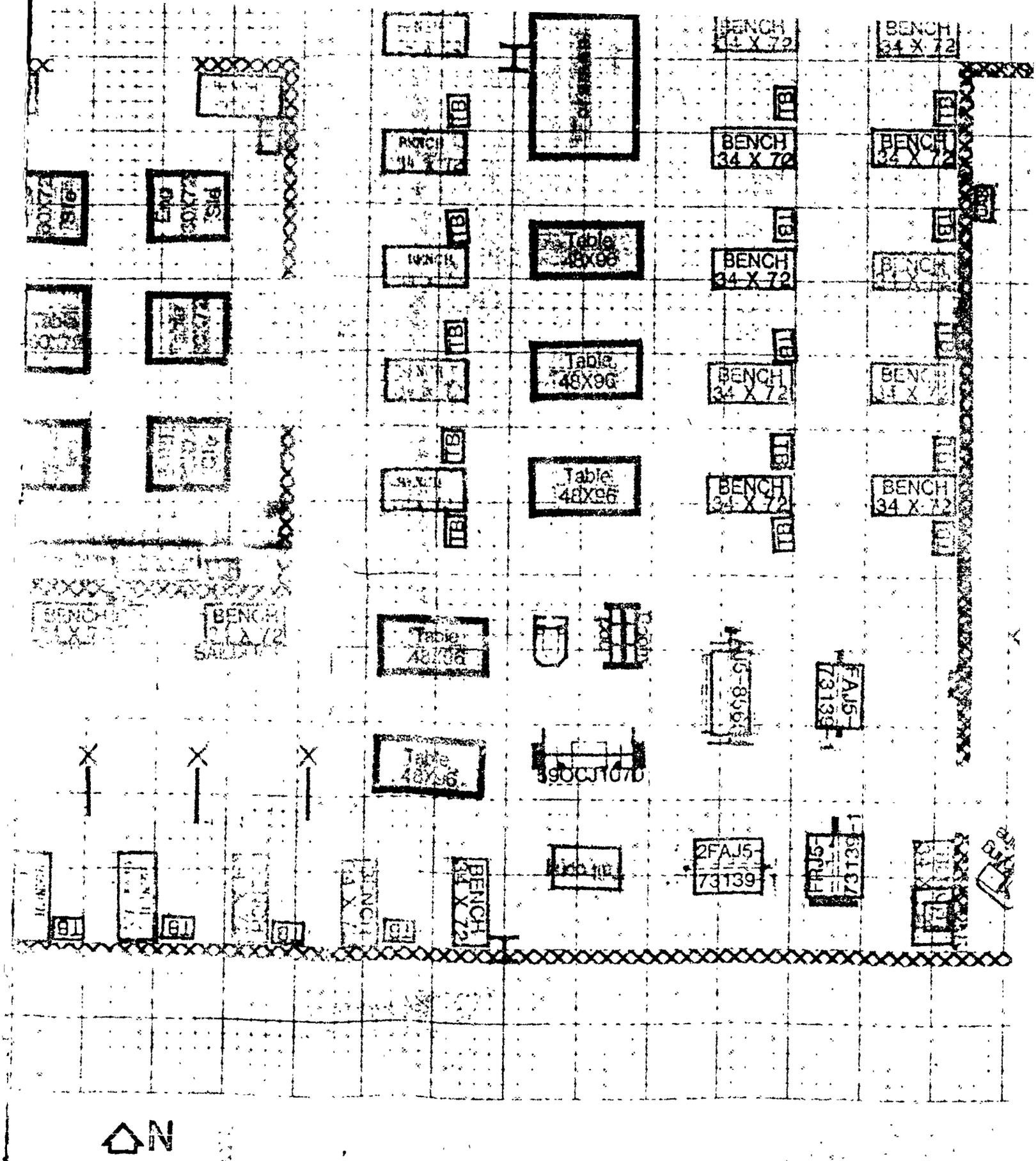
BENCH 34 X 72
BENCH 34 X 72
BENCH 34 X 72
BENCH 34 X 72
BENCH 34 X 72
BENCH 34 X 72
BENCH 34 X 72
BENCH 34 X 72
BENCH 34 X 72
Table 48X96
Table 48X96
Table 48X96
Table 48X96
Table 48X96
TB
FAJ5-73139-1
2FAJ5-73139-1
FRJ5-73139-1
N

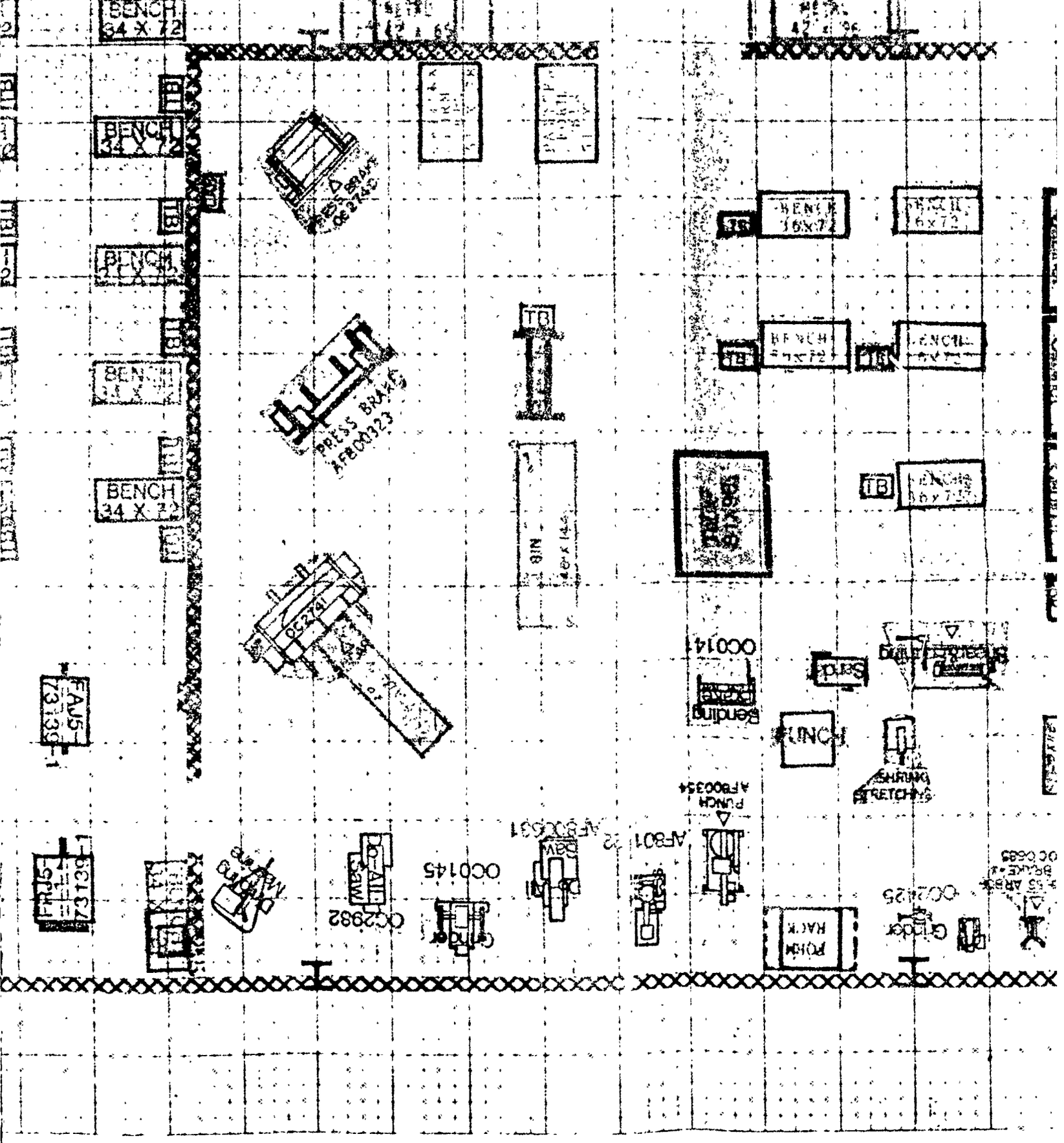
BENCH 34 X 72
BENCH 34 X 72
BENCH 34 X 72
TB
PRESS BRAKE AFB00323
OC2741
OC0141
Bending Brake
Sand
PUNCH
SHRINK STRETCHING
PUNCH AFB00354
AFB01
AFB00631
OC0145
OC2982
Grinder
FORM RACK
OC2425
Grinder
FAJ5-73139-1
FRJ5-73139-1

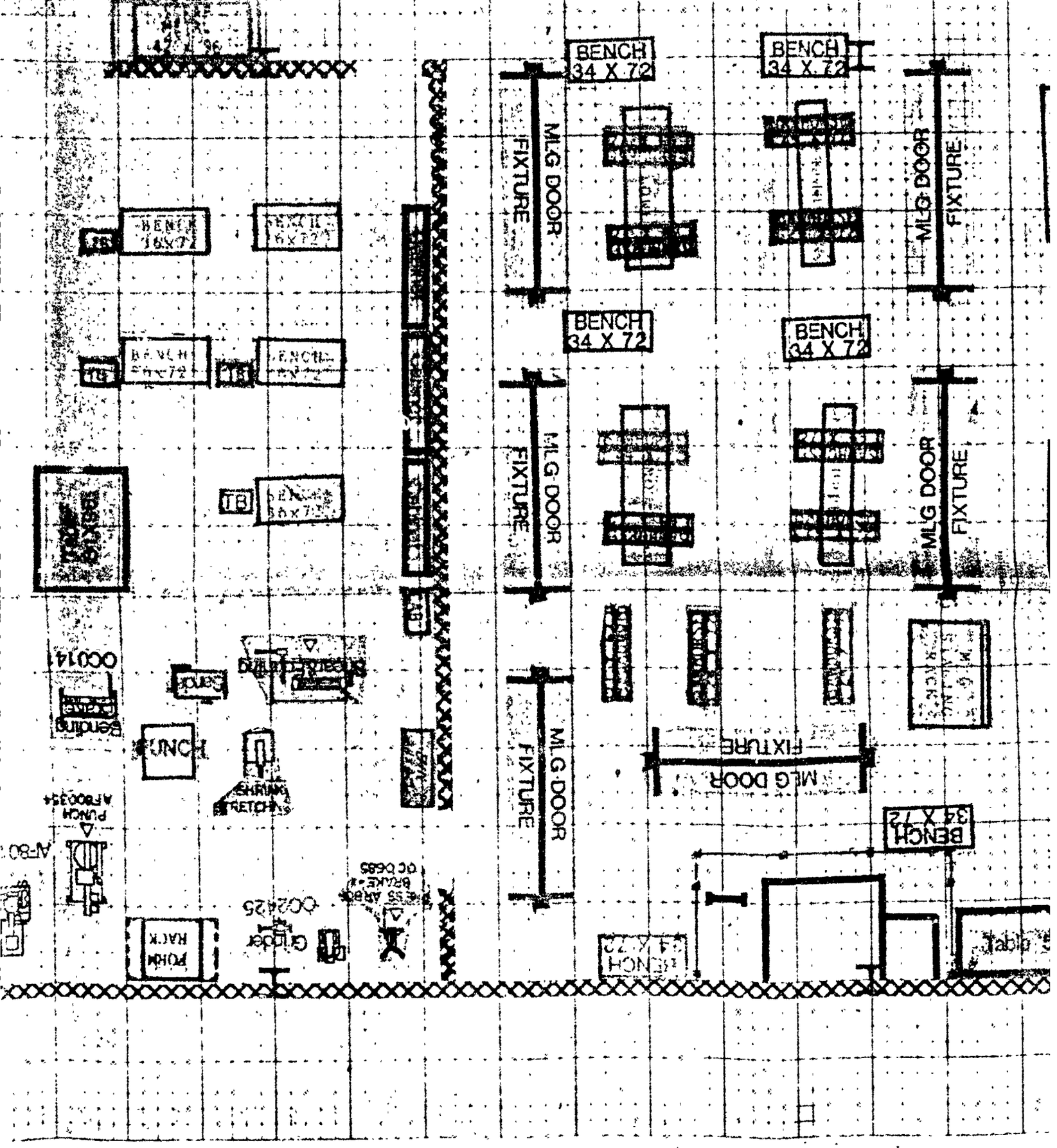
BENCH 34 X 72
MLG DOOR
FIXTURE
BENCH 34 X 72
MLG DOOR
FIXTURE
BENCH 34 X 72
MLG DOOR
FIXTURE
BENCH 34 X 72
MLG DOOR
FIXTURE
MLG DOOR
FIXTURE
BENCH 34 X 72
TB
TB
TB

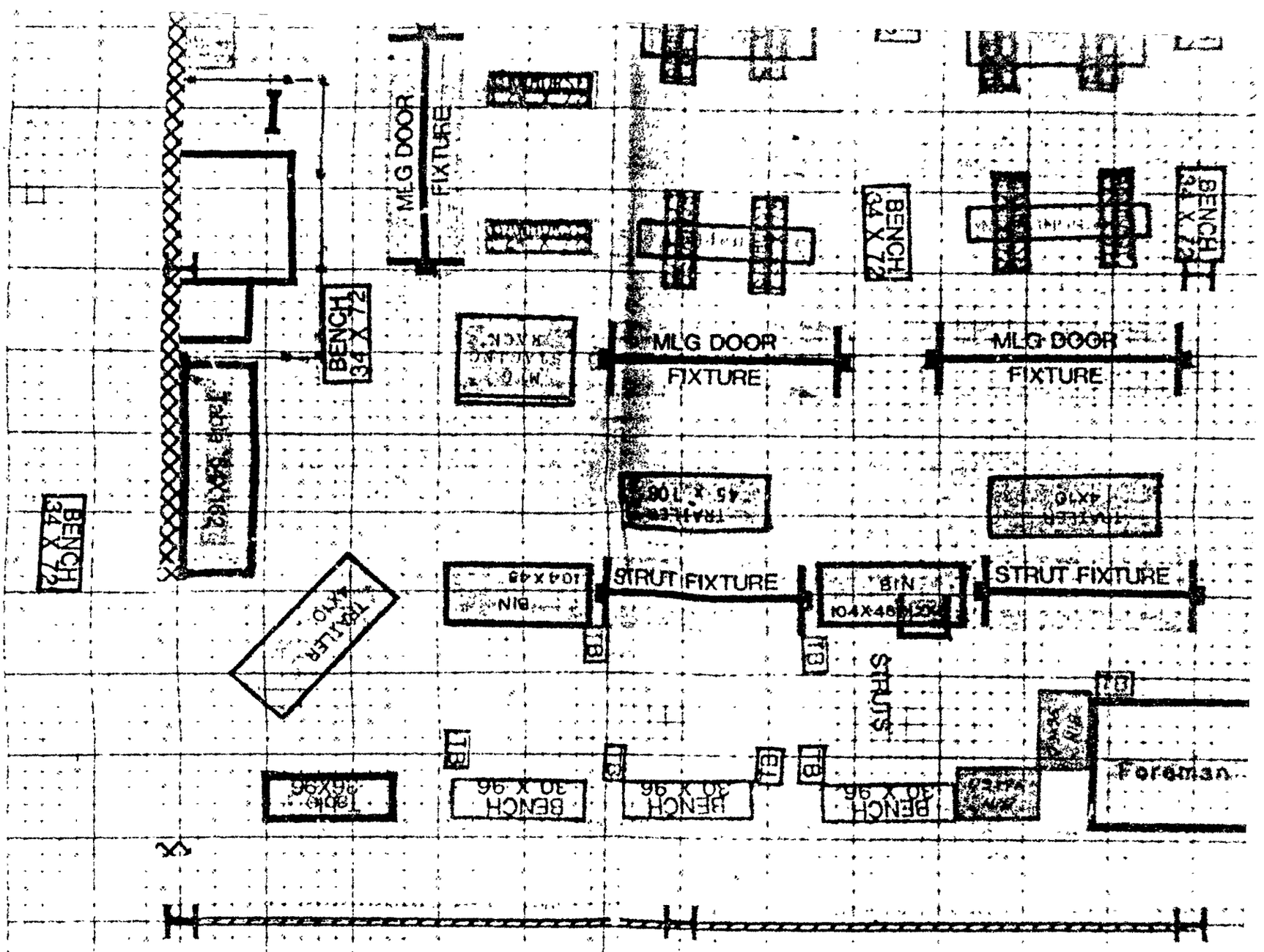
MLG DOOR
FIXTURE
BENCH
34 X 72
MLG DOOR
FIXTURE
MLG DOOR
FIXTURE
BENCH
34 X 72
BENCH
34 X 72
STRUT FIXTURE
STRUT FIXTURE
STRUTS
BENCH
30 X 96
BENCH
30 X 96
BENCH
30 X 96
Foreman

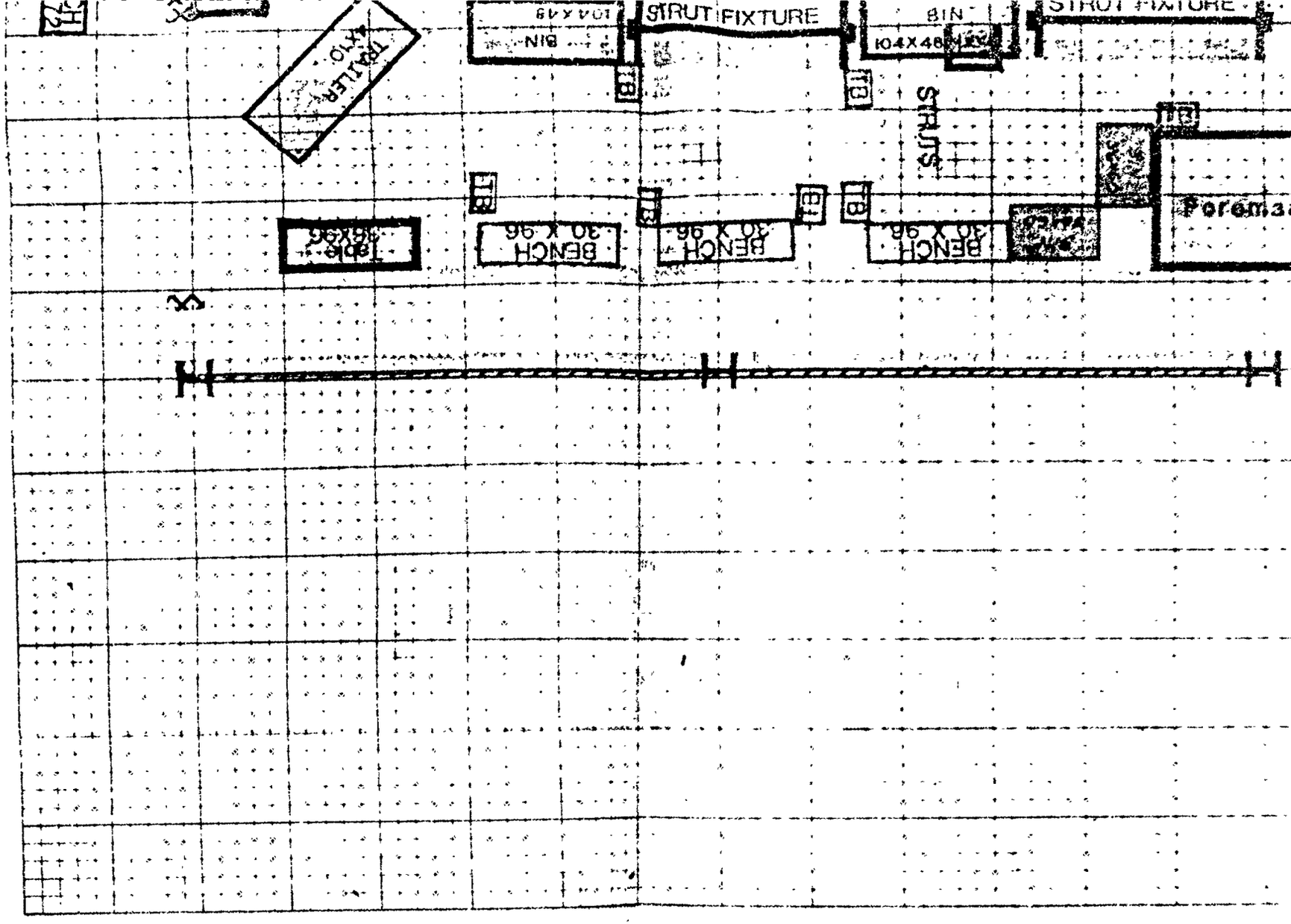
STRUT FIXTURE
STRUT FIXTURE
104X48
BIN
TRAILER
4X10
STRUTS
BENCH
30 X 96
BENCH
30 X 96
BENCH
30 X 96
Table
36X96
Porema

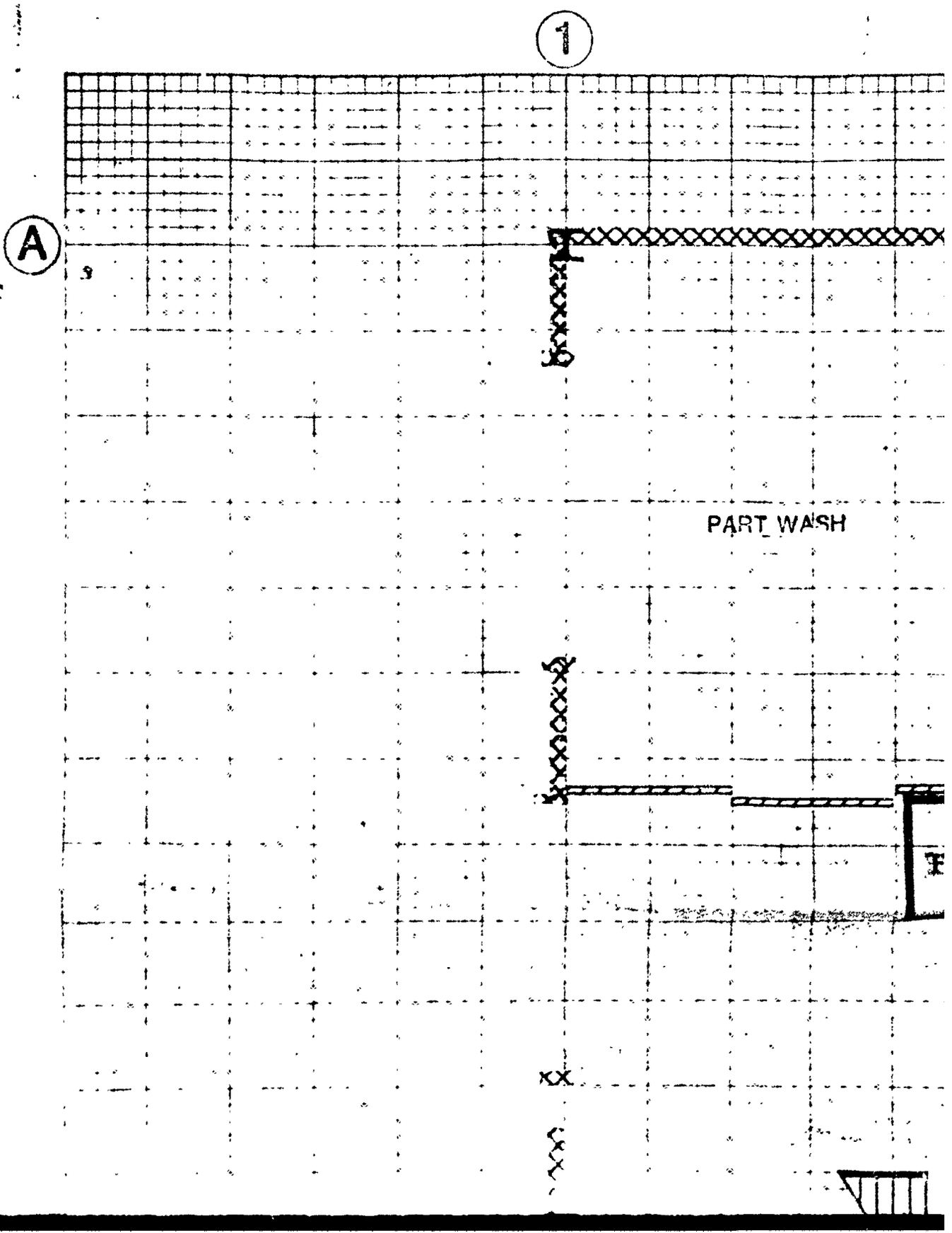
1
A
PART WASH

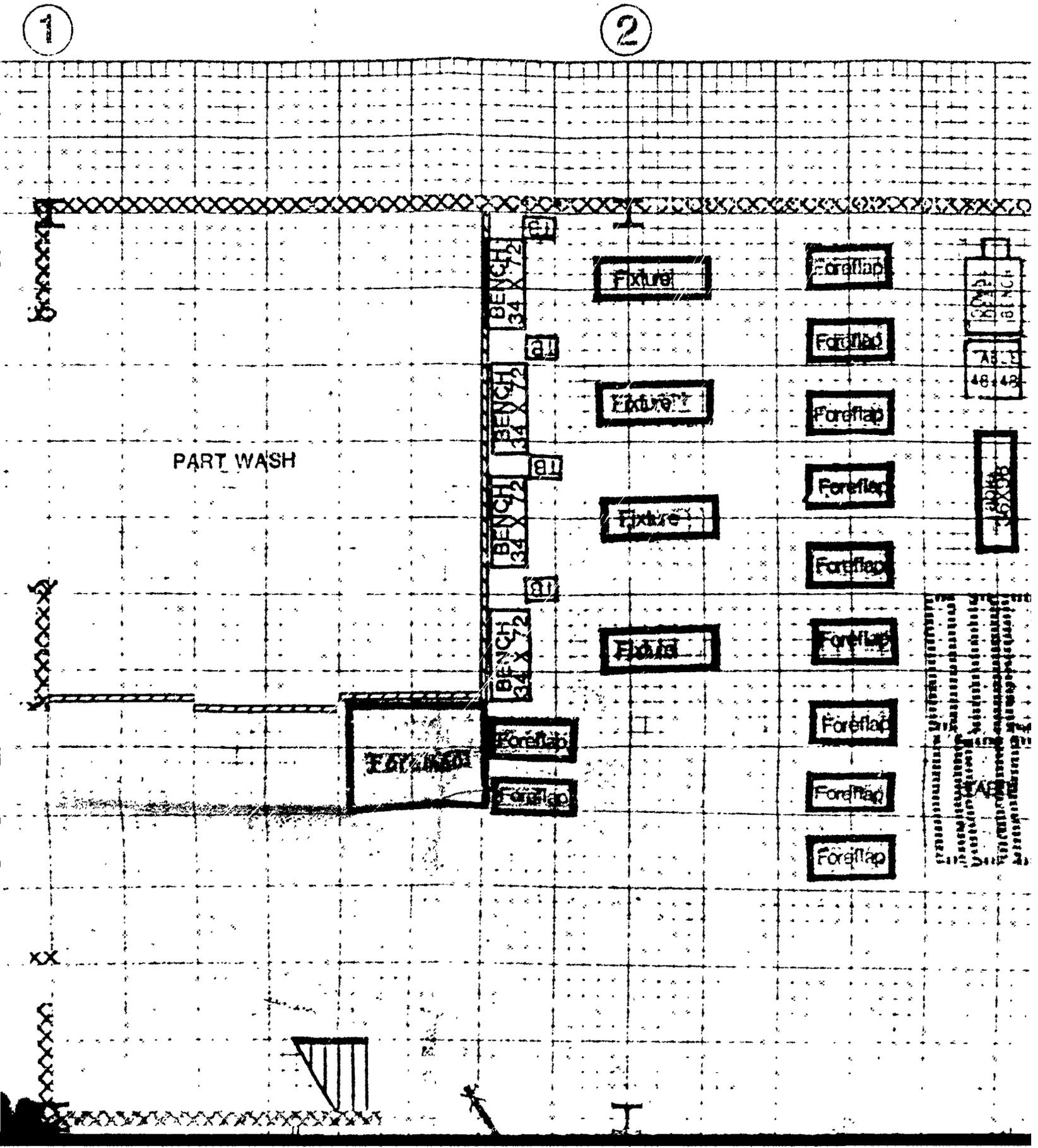

1
2
PART WASH
BENCH 34 X 72
BENCH 34 X 72
BENCH 34 X 72
BENCH 34 X 72
Fixture
Fixture
Fixture
Fixture
Foreflap
Foreflap
Foreflap
Foreflap
Foreflap
Foreflap
Foreflap
Foreflap
Foreflap
Foreflap
Foreflap
Foreflap

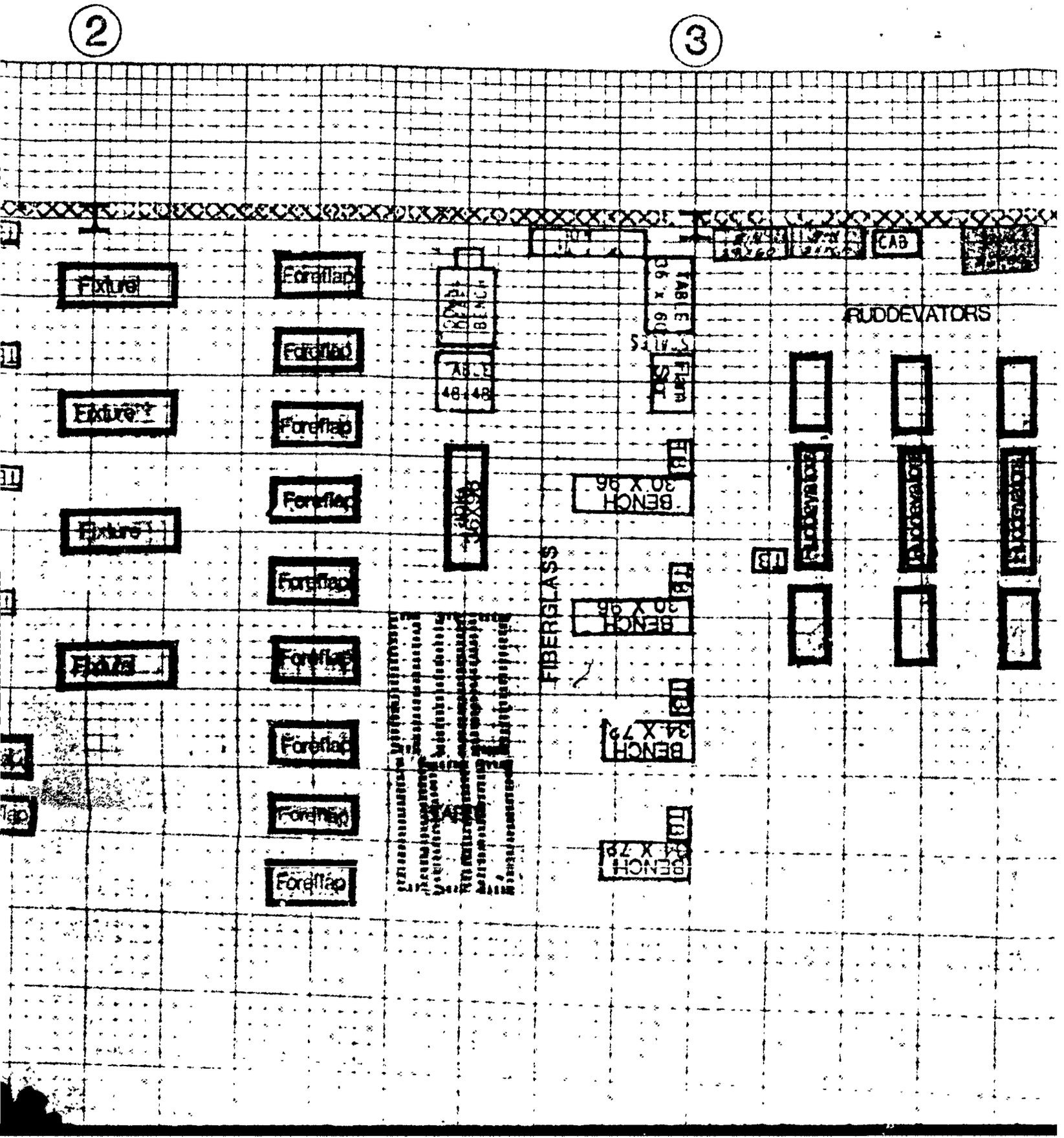

2
3
Fixture
Fixture
Fixture
Fixture
Foreflap
Foreflap
Foreflap
Foreflap
Foreflap
Foreflap
Foreflap
Foreflap
TABLE
48 x 48
TABLE
36 x 60
Flam Stor
BENCH
30 X 96
BENCH
30 X 96
BENCH
34 X 72
BENCH
34 X 72
FIBERGLASS
CAB
RUDDEVATORS
Ruddevators
Ruddevators
Ruddevators

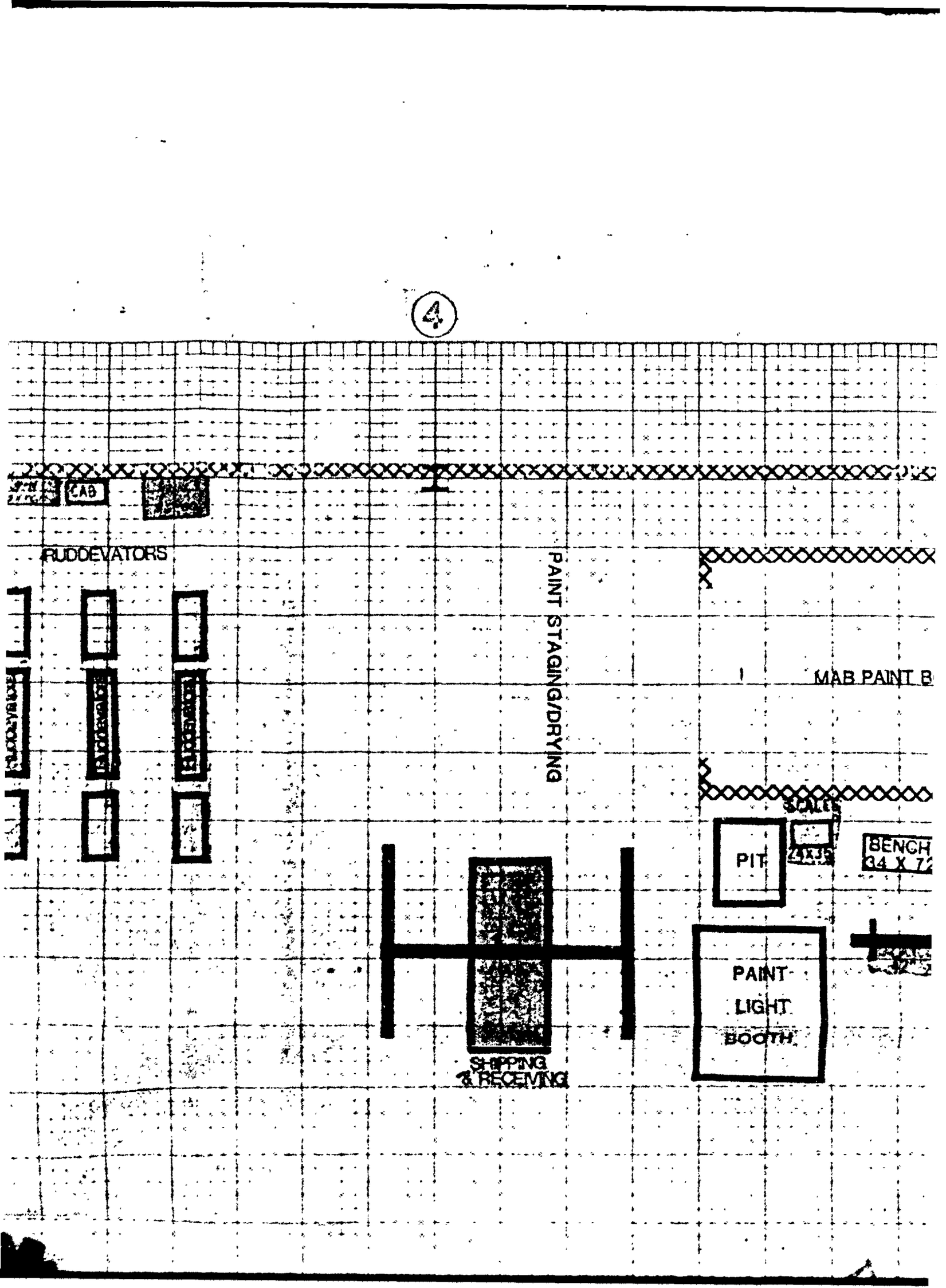
4
CAB
RUDDEVATORS
PAINT STAGING/DRYING
MAB PAINT B
SCALES
PIT
BENCH
34 X 7
PAINT
LIGHT
BOOTH
SHIPPING
& RECEIVING

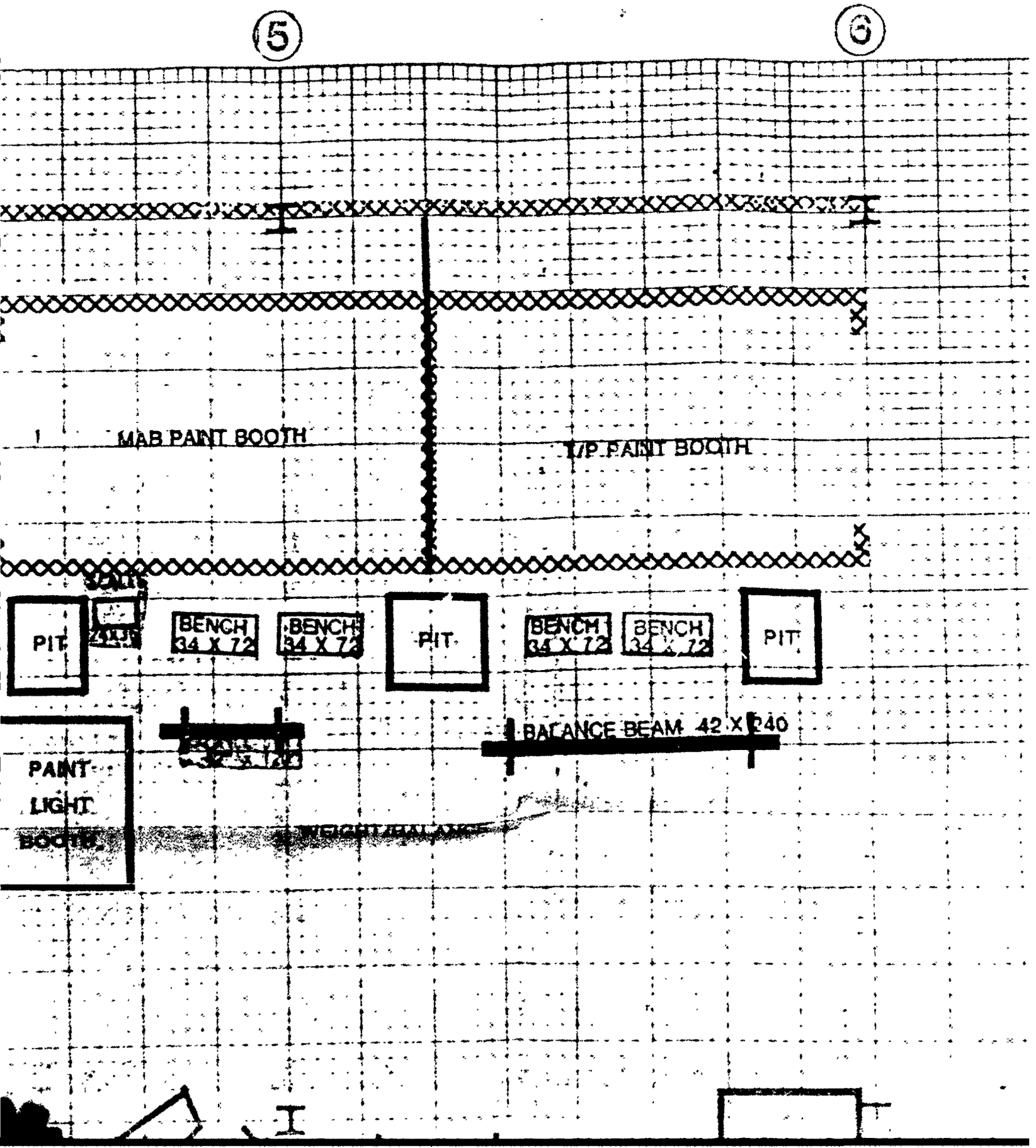
5
6
MAB PAINT BOOTH
T/P PAINT BOOTH
PIT
BENCH 34 X 72
BENCH 34 X 72
PIT
BENCH 34 X 72
BENCH 34 X 72
PIT
BALANCE BEAM 42 X 240
PAINT LIGHT BOOTH

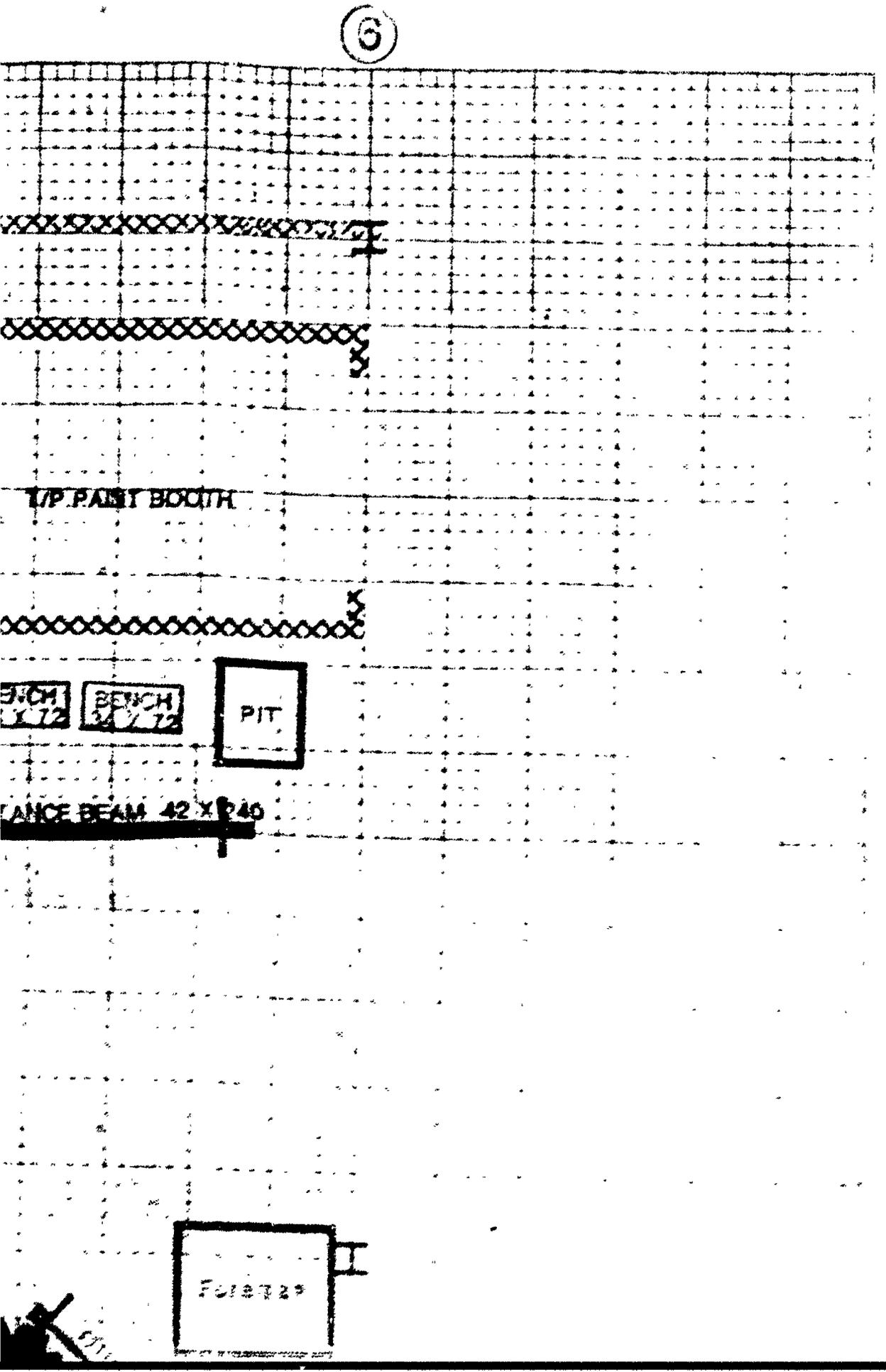
6
T/P PAINT BOOTH
BENCH
PIT
ANCE BEAM 42 X 40

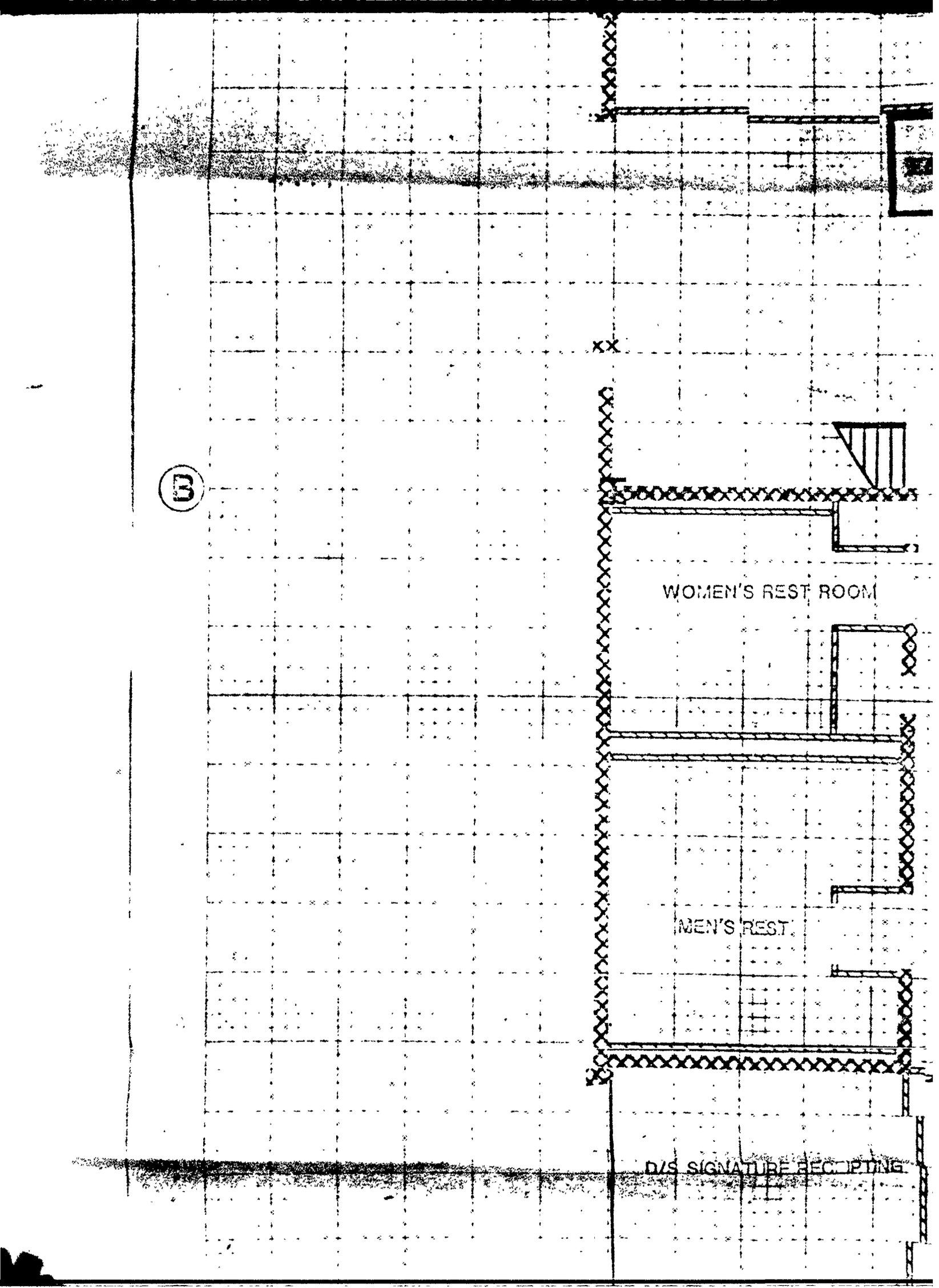
B
WOMEN'S REST ROOM
MEN'S REST
D/S SIGNATURE RECEIPTING

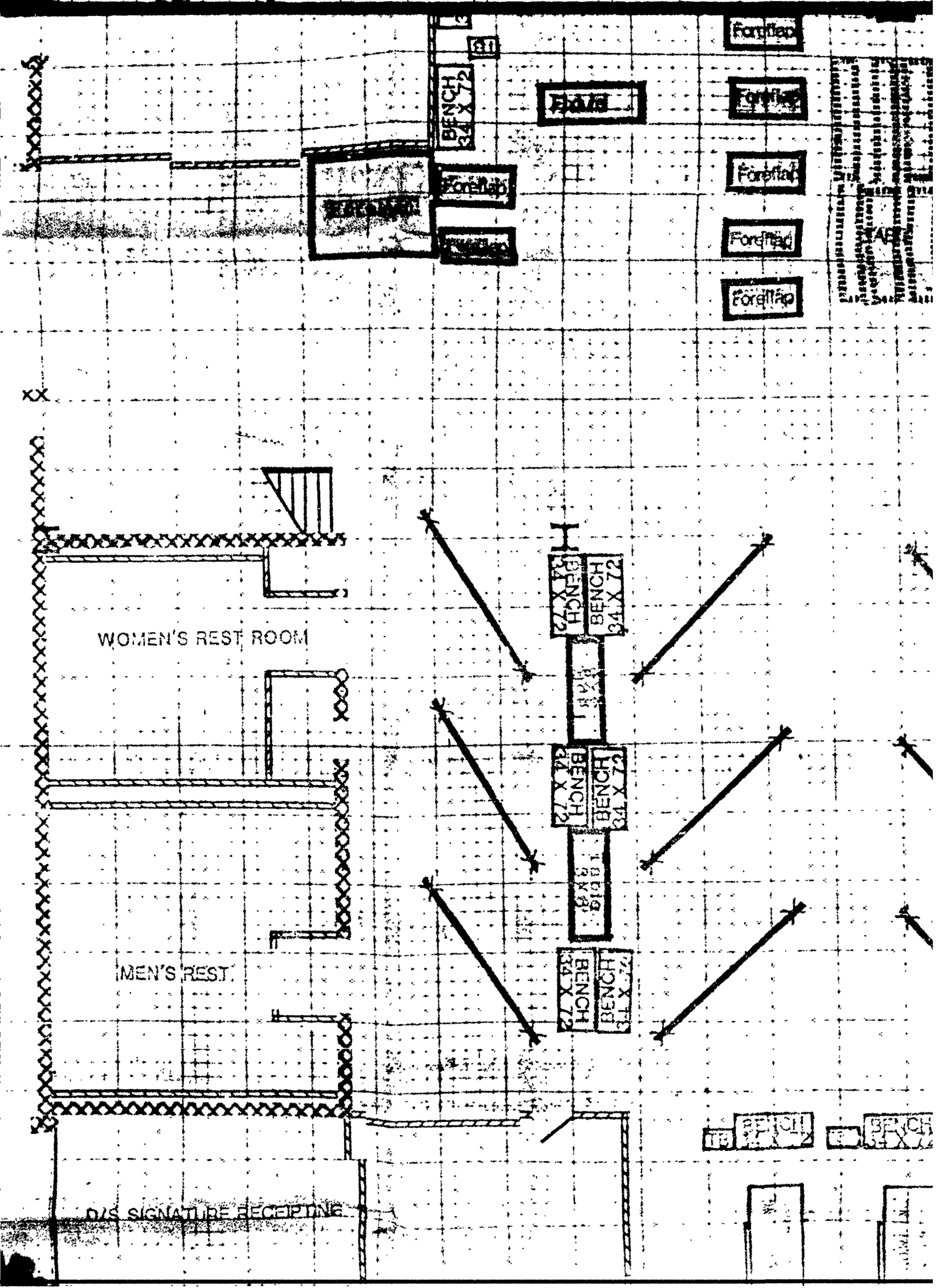

Foreflap
Foreflap
Foreflap
Foreflap
Foreflap
Foreflap
BENCH 34 X 72
WOMEN'S REST ROOM
MEN'S REST
D/S SIGNATURE RECEIPTING

Foreflap
Foreflap
Foreflap
Foreflap
Foreflap
Foreflap
FIBERGLASS
BENCH 34 X 72
BENCH 34 X 72
BENCH 34 X 72

FIBERGLASS

BENCH 36 X 96

BENCH 34 X 72

BENCH 34 X 72

SHIPPING & RECEIVING

BENCH 34 X 72

BENCH 34 X 72

BENCH 34 X 72

BENCH 34 X 72

BENCH 34 X 72

BENCH 34 X 72

BENCH 34 X 72

BENCH 34 X 72

BENCH 34 X 72

BENCH 34 X 72

FLAP FIXTURE

FLAP FIXTURE

Foreman

TRANSFORMER

BENCH 34 X 72

BENCH 24 X 72

BENCH 34 X 72

BENCH 34 X 72

BENCH 34 X 72

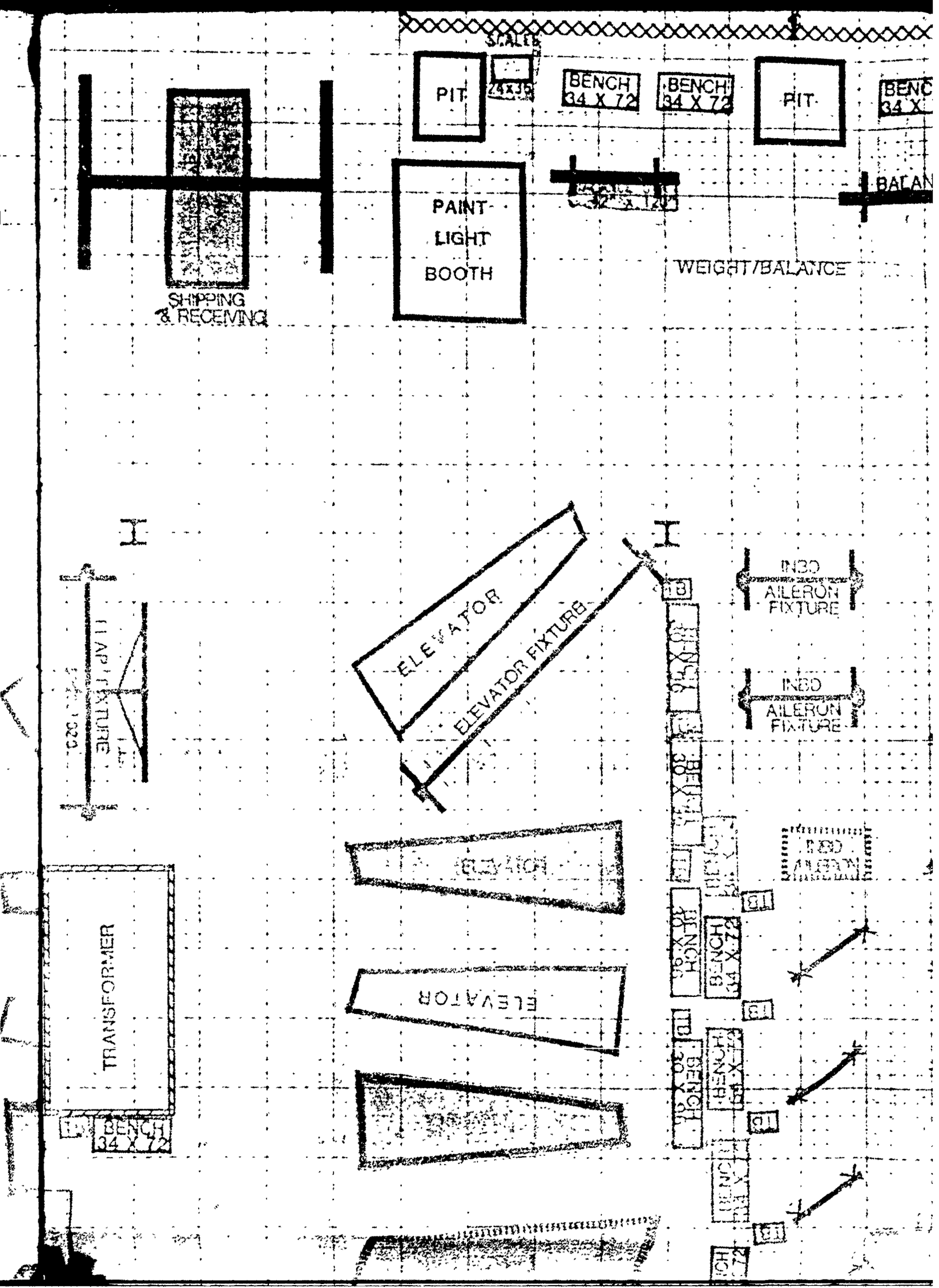
SCALE
PIT
24X36
BENCH 34 X 72
BENCH 34 X 72
PIT
BENC 34 X
BAL AN
PAINT LIGHT BOOTH
WEIGHT/BALANCE
SHIPPING & RECEIVING
ELEVATOR
ELEVATOR FIXTURE
IN&O AILERON FIXTURE
IN&O AILERON FIXTURE
IN&O AILERON
BENCH 30 X 72
BENCH 30 X 72
BENCH 30 X 72
BENCH 30 X 72
BENCH 34 X 72
BENCH 34 X 72
TRANSFORMER
ELEVATOR
ELEVATOR
BENCH 34 X 72
BENCH 34 X 72
BENCH 34 X 72

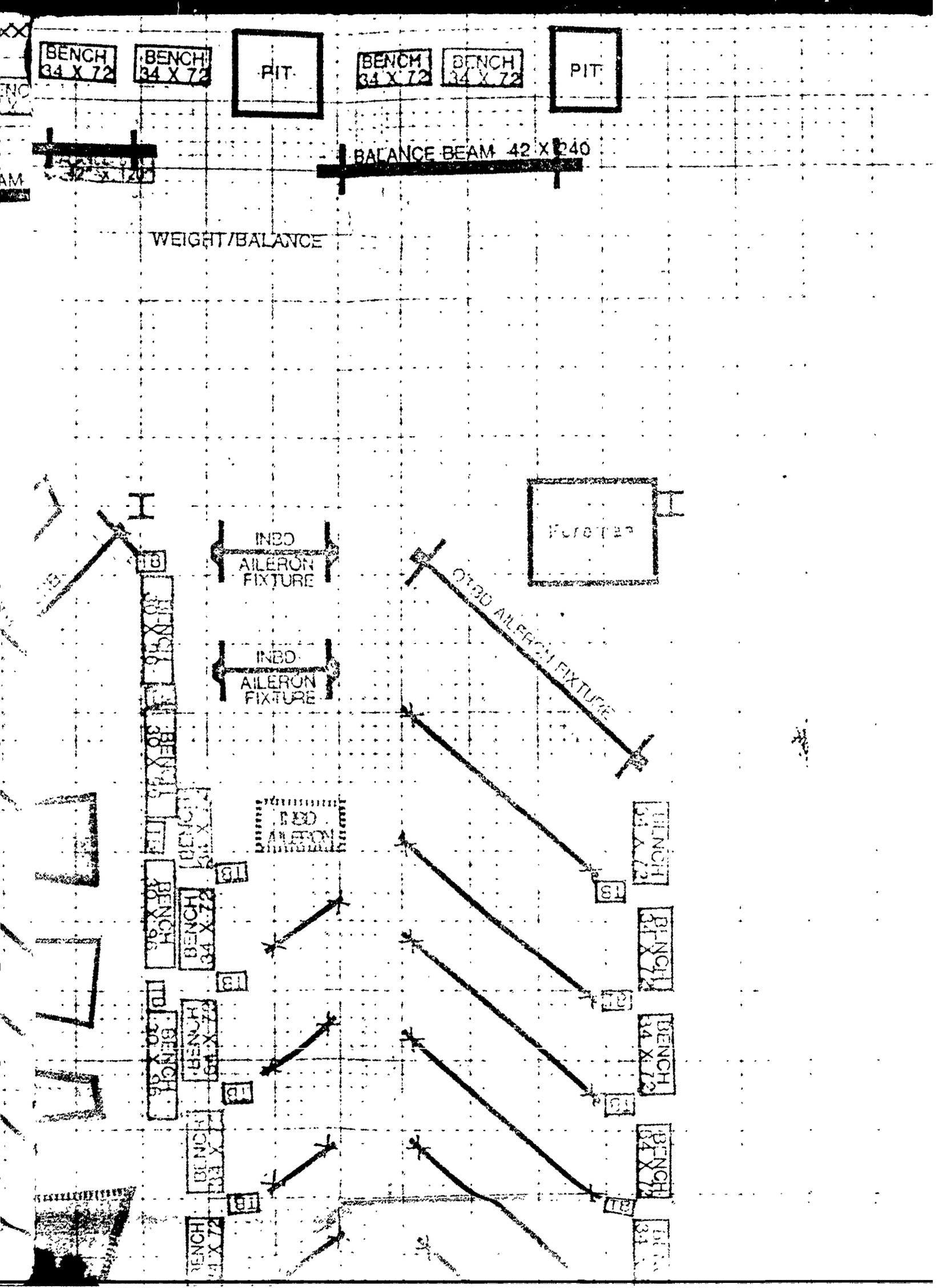
BENCH 34 X 72
BENCH 34 X 72
PIT
BENCH 34 X 72
BENCH 34 X 72
PIT
BALANCE BEAM 42 X 240
WEIGHT/BALANCE
INBD AILERON FIXTURE
INBD AILERON FIXTURE
OTBD AILERON FIXTURE
BENCH 30 X 72
BENCH 30 X 72
BENCH 34 X 72
BENCH 34 X 72
BENCH 34

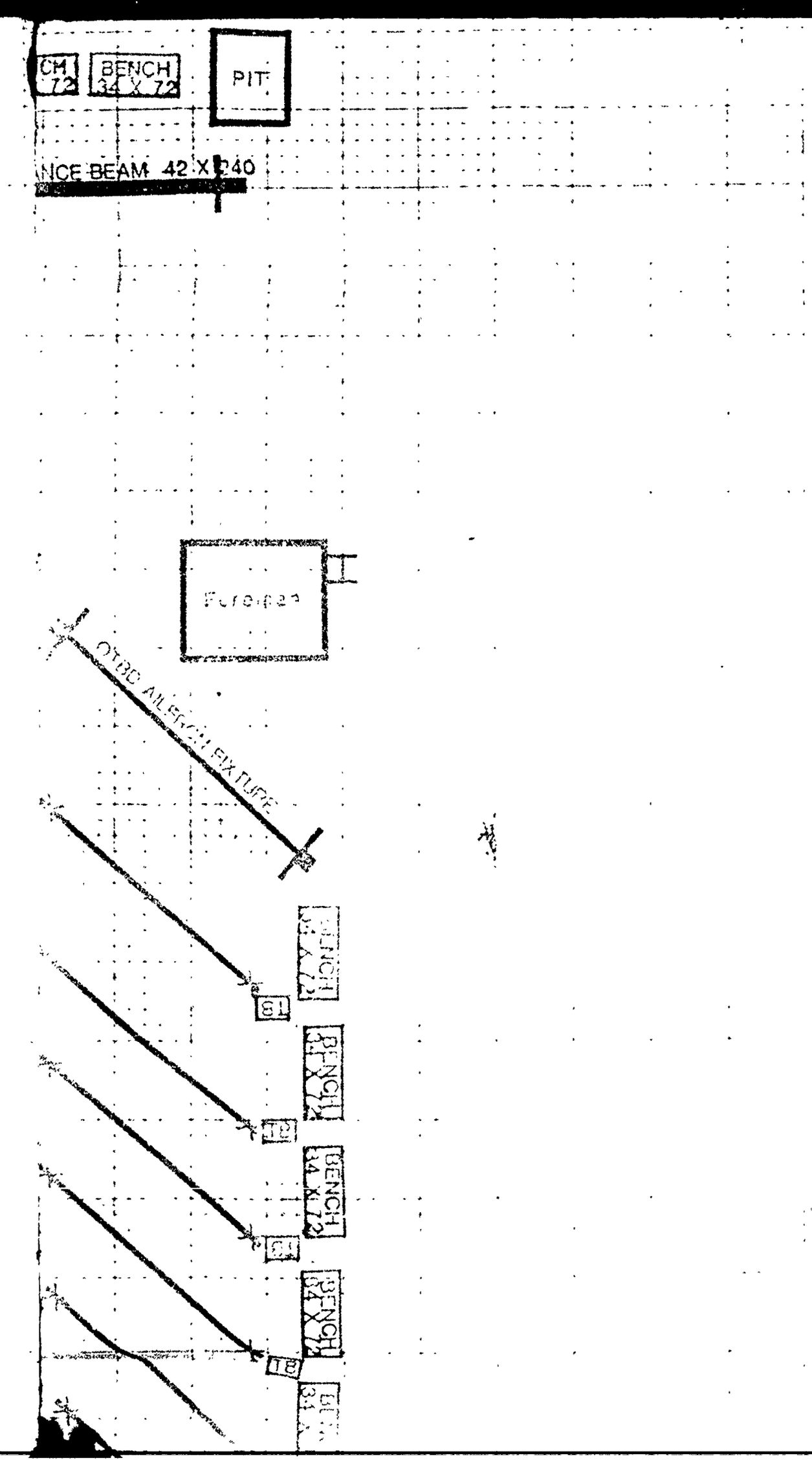
CH 72
BENCH 34 X 72
PIT
NCE BEAM 42 X 240
Foreman
OTBD AILERON FIXTURE
BENCH 34 X 72
BENCH 34 X 72
BENCH 34 X 72
BENCH 34 X 72

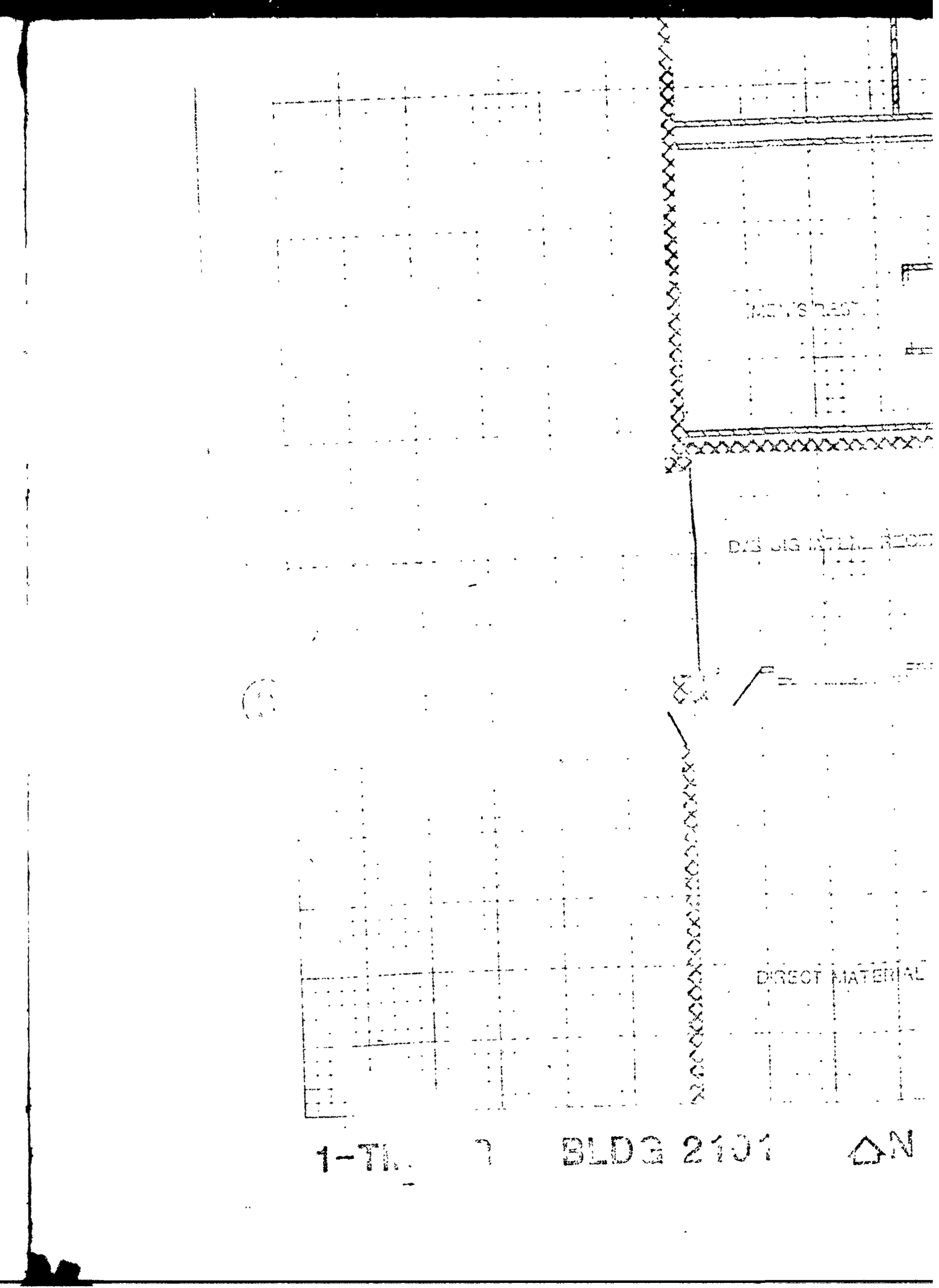
DIRECT MATERIAL
BLDG 2101
N

BENCH
BENCH
INDIRECT MATERIAL
DIRECT MATERIAL
AWAITING PARTS
2101
N

Foremen
BENCH 24 X 72
BENCH 24 X 72
BENCH 24 X 72

Foreman

TRANSFORMER

ELEVATOR

ELEVATOR

RUDDER FIXTURE

RUDDER

BENCH 34" X 72"

BENCH 34" X 72"

BENCH 34" X 72"

WELDING BOOTH

BENCH
RUDDER FIXTURE
SPOILERS
SPOILER FIXTURE

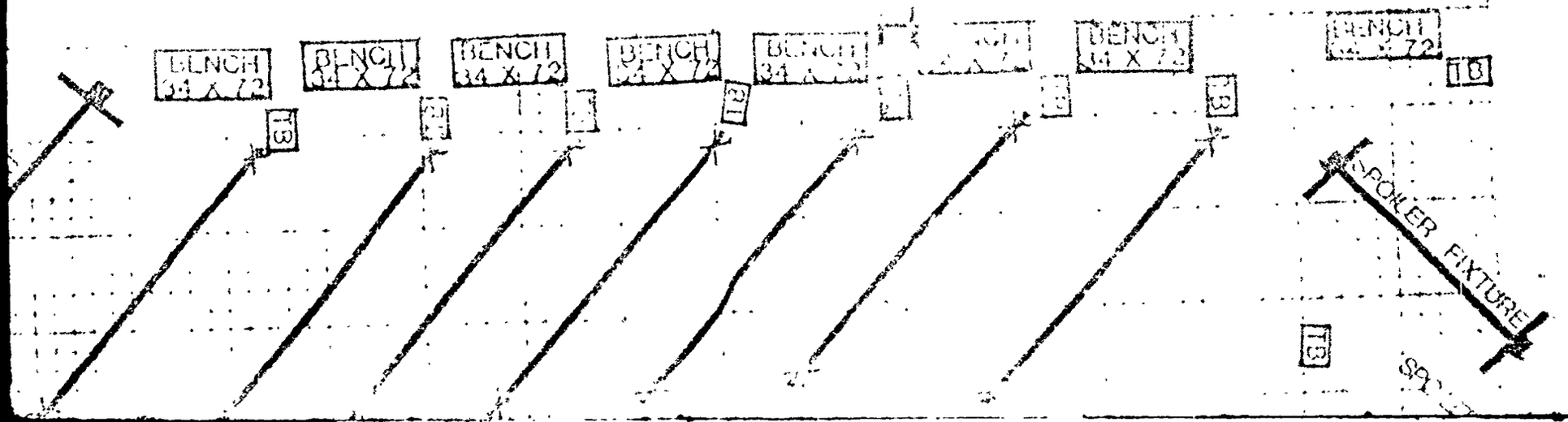
BENCH
34 X 72
BENCH
34 X 72
BENCH
34 X 72
BENCH
34 X 72
BENCH
34 X 72
BENCH
34 X 72
BENCH
34 X 72
SPOILER FIXTURE

(C)
(D)
DIRECT

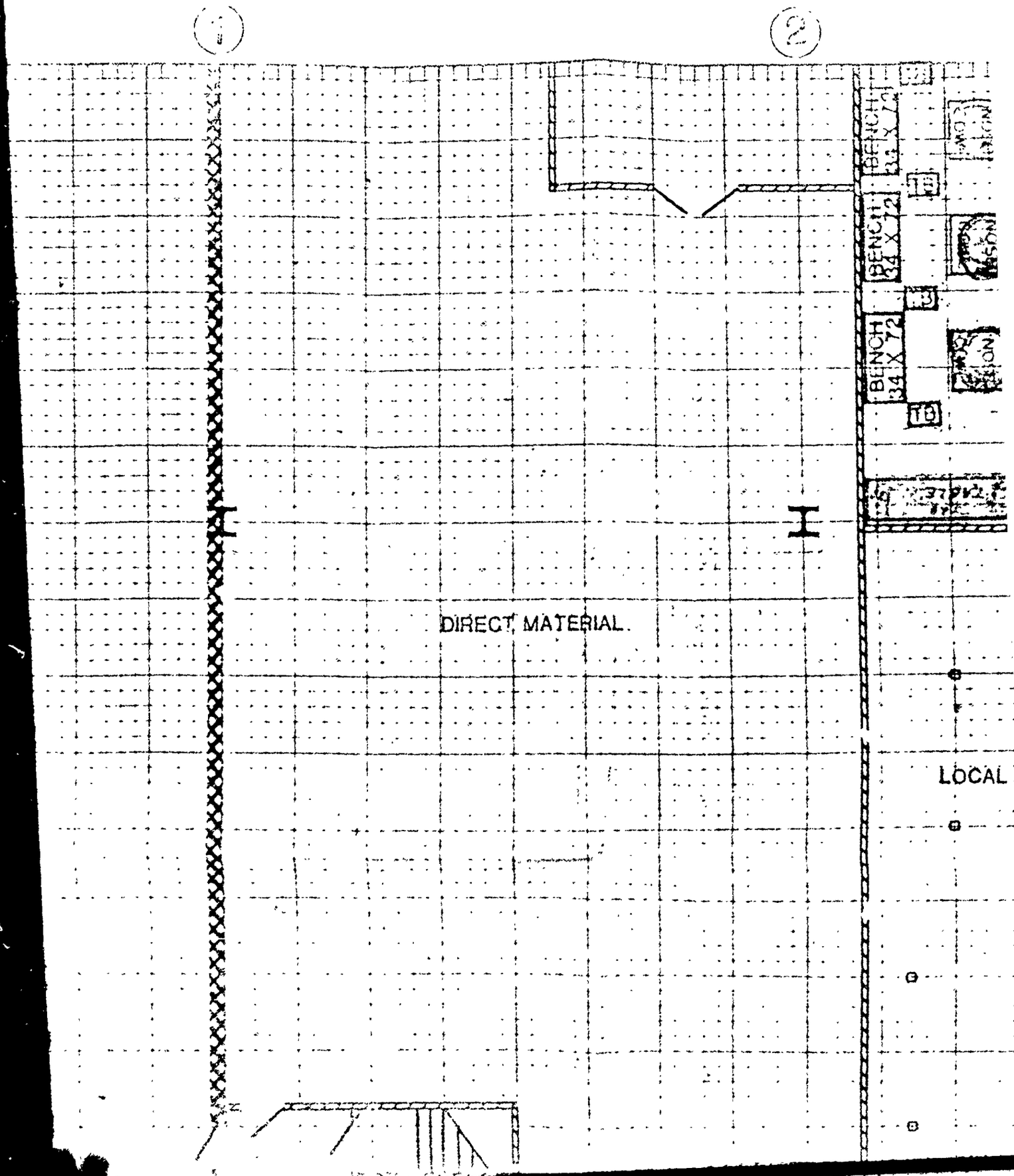
1
2
BENCH
34 X 72
BENCH
34 X 72
DIRECT MATERIAL
LOCAL

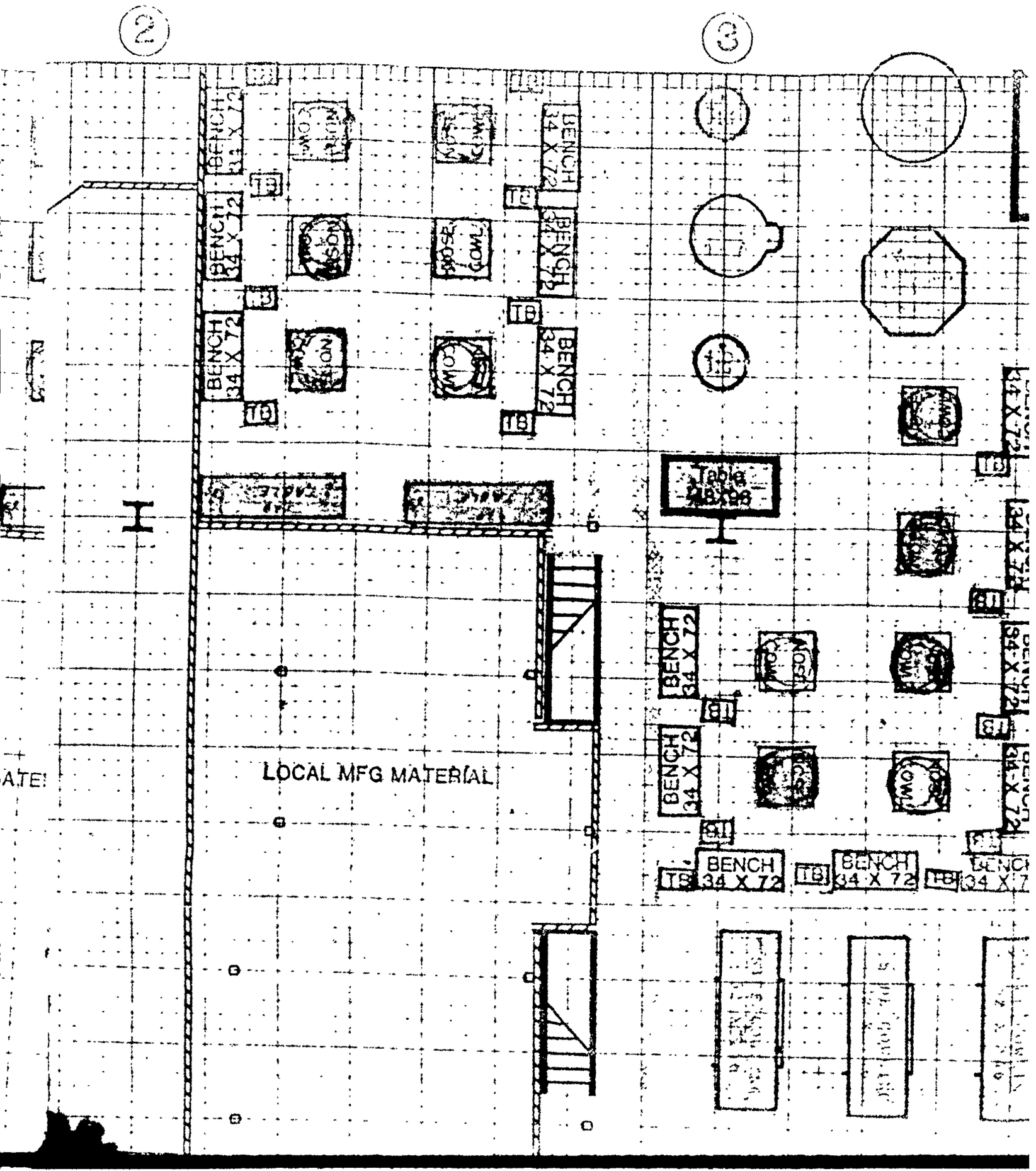

2
3
BENCH 34 X 72
TB
Table
LOCAL MFG MATERIAL

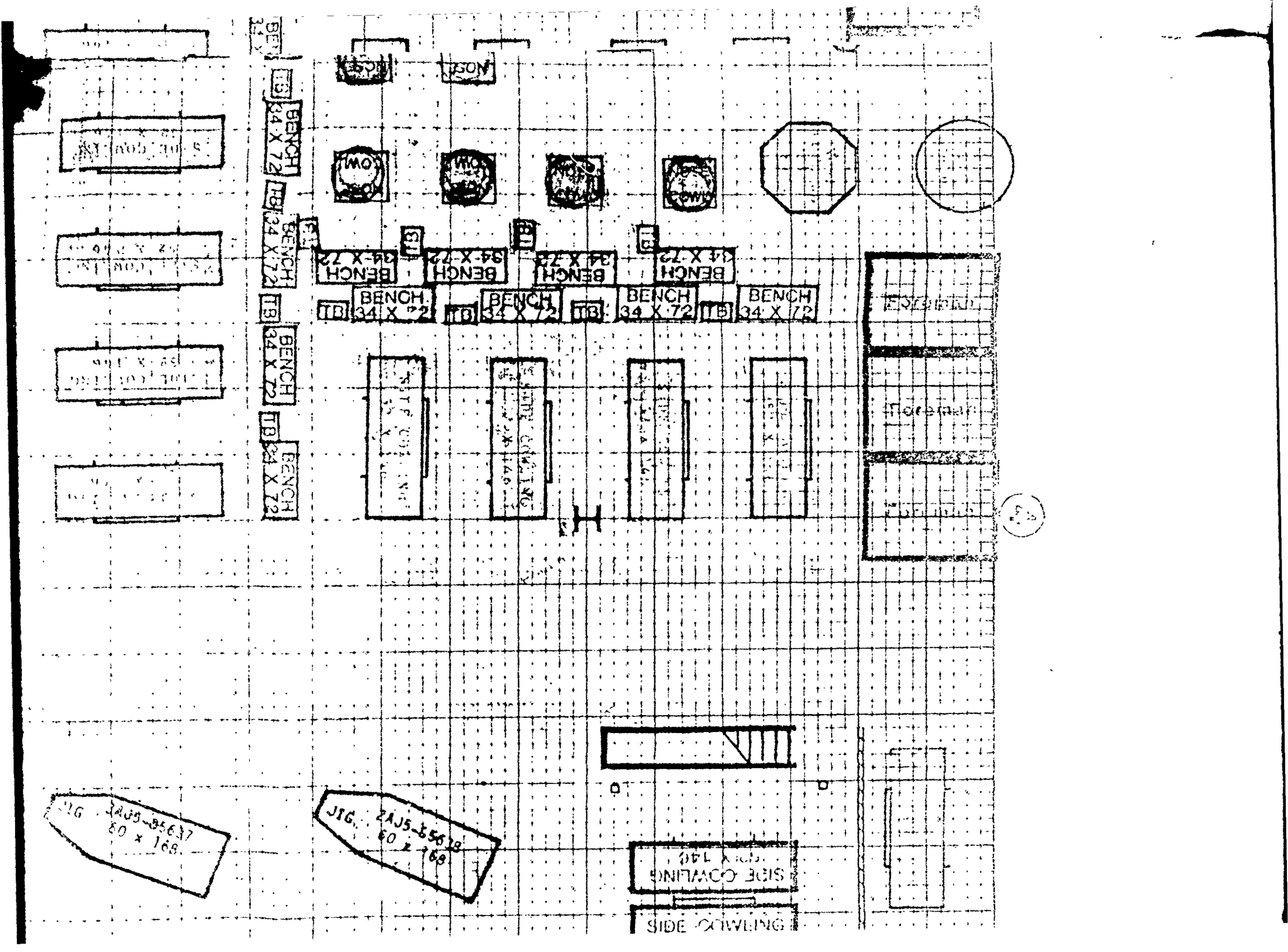
BENCH 34 X 72
TB
BENCH 34 X 72
BENCH 34 X 72
BENCH 34 X 72
BENCH 34 X 72
BENCH 34 X 72
BENCH 34 X 72
BENCH 34 X 72
BENCH 34 X 72
BENCH 34 X 72
JIG 2AJ5-5637 60 x 168
JIG 2AJ5-5638 60 x 168
SIDE COWLING
SIDE COWLING

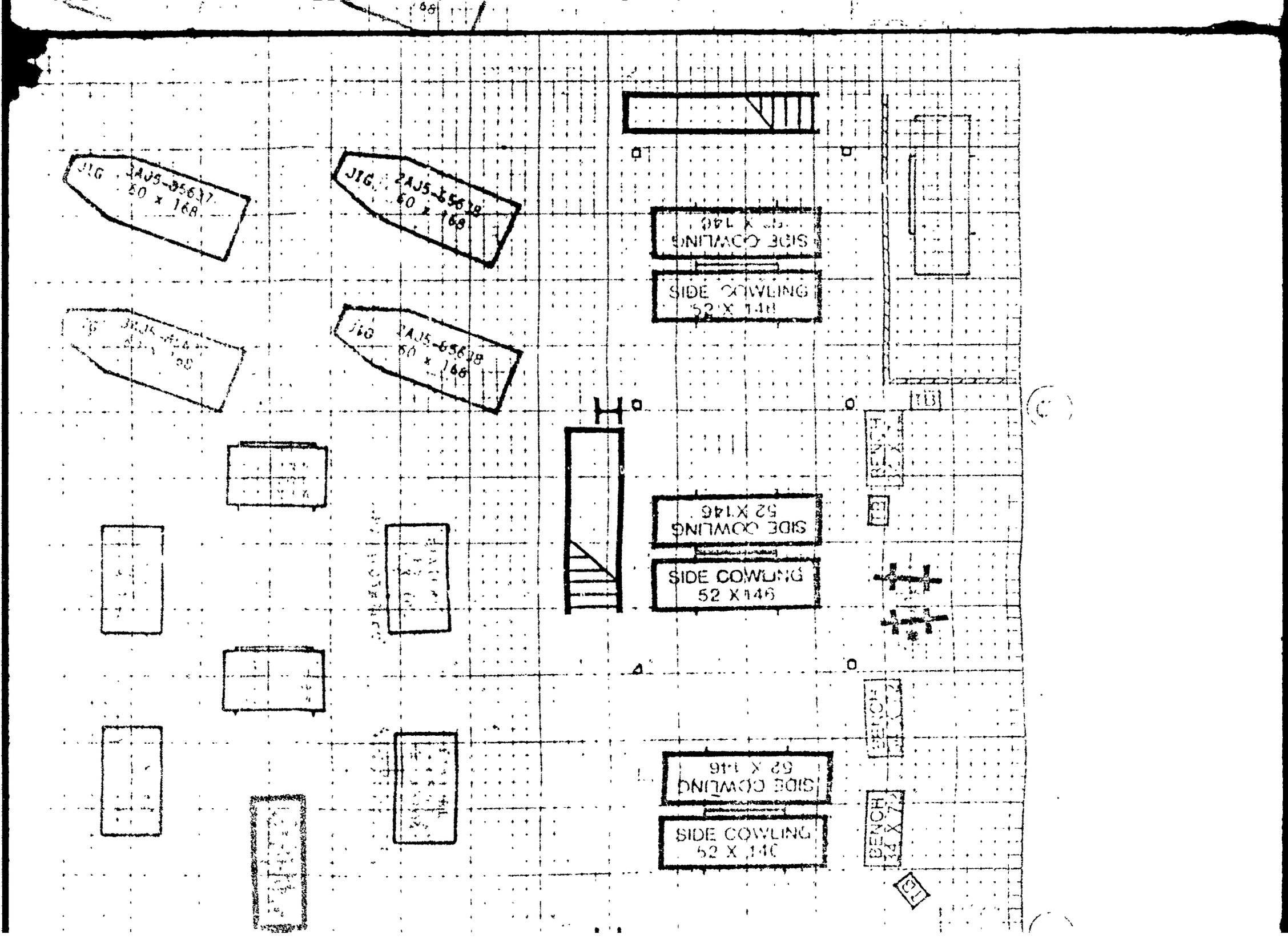
JIG 2AJ5-35637
50 x 168
JIG 2AJ5-35638
50 x 168
JIG 2AJ5-35638
50 x 168
SIDE COWLING
52 X 146
SIDE COWLING
52 X 146
SIDE COWLING
52 X 146
SIDE COWLING
52 X 146
BENCH
BENCH
BENCH

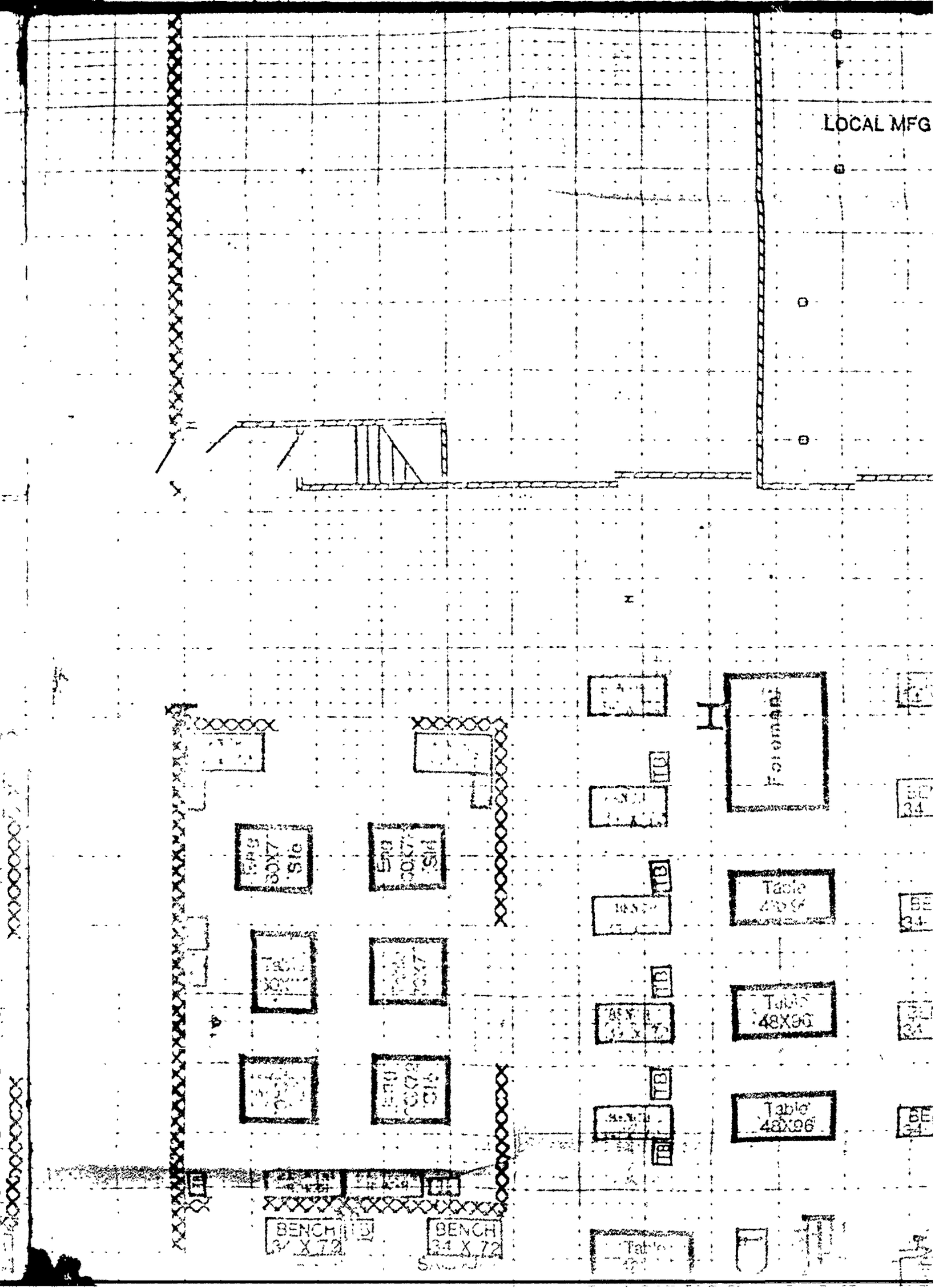
LOCAL MFG
Foreman
Table
48X96
Table
48X96
Table
48X96
BENCH
34 X 72
BENCH
34 X 72
TB

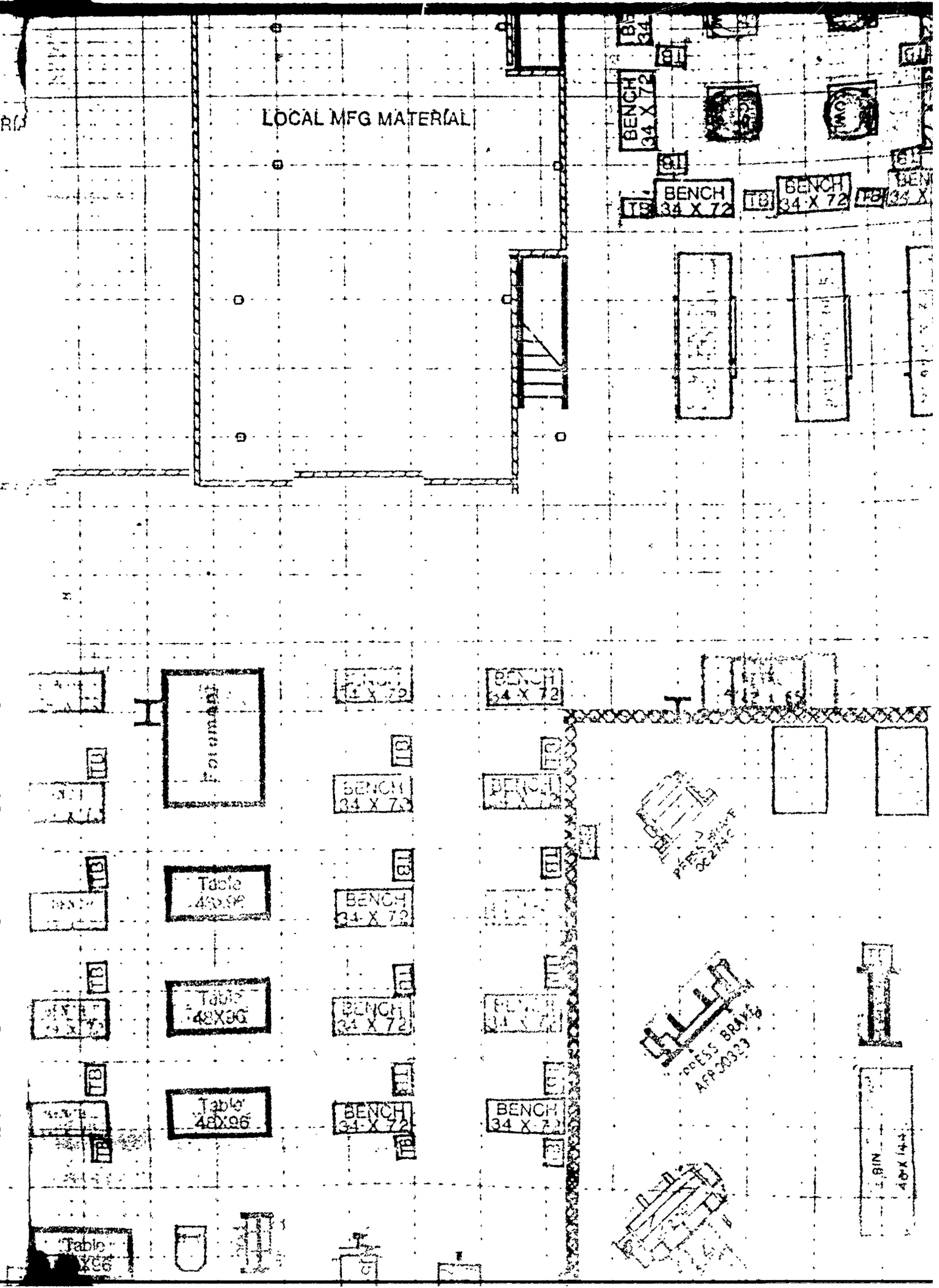
LOCAL MFG MATERIAL
BENCH 34 X 72
BENCH 34 X 72
BENCH 34 X 72
BENCH 34 X 72
Foreman
Table 48X96
Table 48X96
Table 48X96
BENCH 34 X 72
BENCH 34 X 72
BENCH 34 X 72
BENCH 34 X 72
BENCH 34 X 72
BENCH 34 X 72
PRESS BRAKE
PRESS BRAKE
BIN
TB

BENCH 34 X 72

BENCH 34 X 72

BENCH 34 X 72

BENCH 34 X 72

BENCH 34 X 72

BENCH 34 X 72

BENCH 34 X 72

BENCH 34 X 72

TB

TB

TB

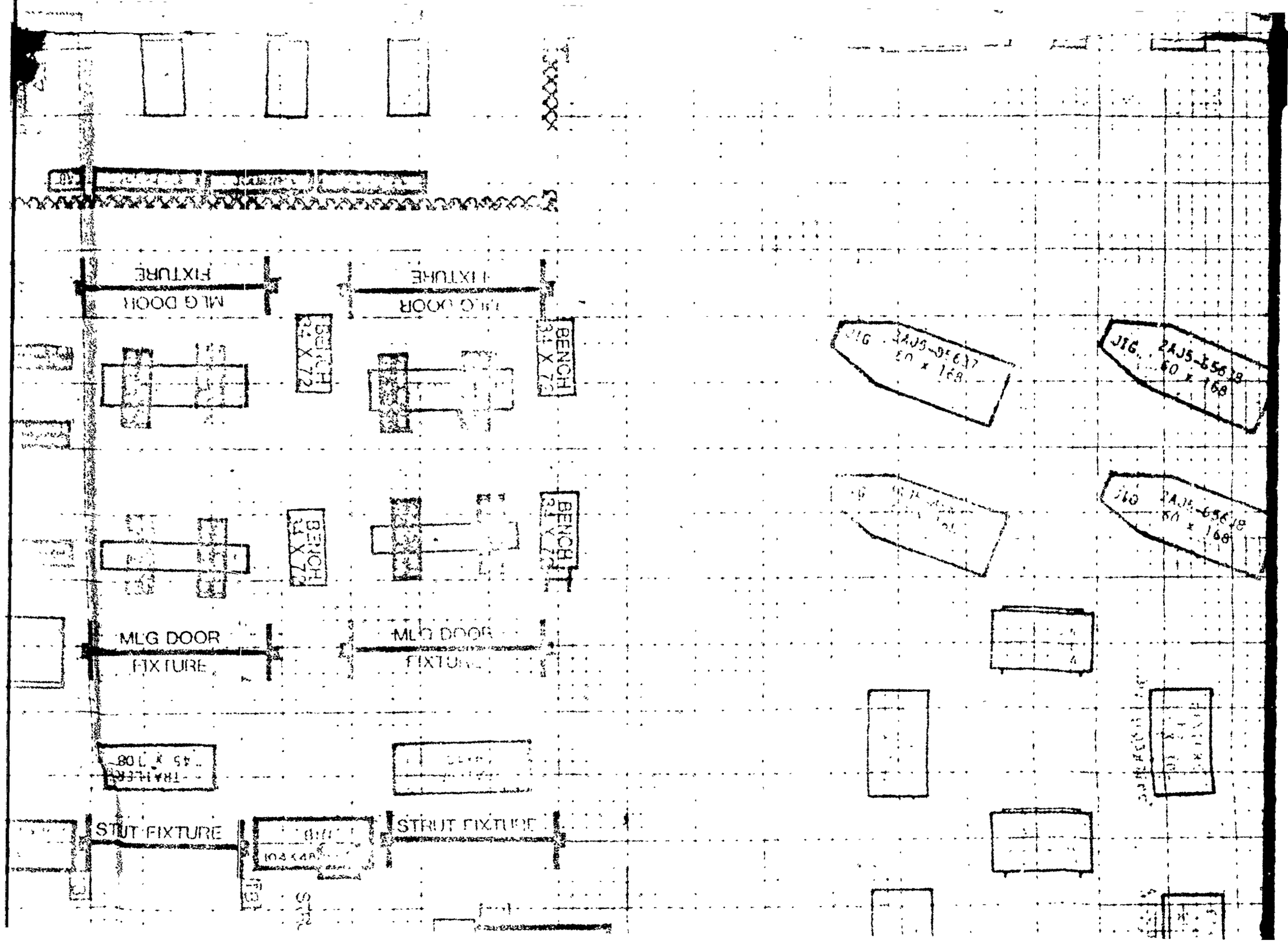
MLG DOOR
FIXTURE
BENCH
24 X 72
MLG DOOR
FIXTURE
BENCH
24 X 72
MLG DOOR
FIXTURE
BENCH
24 X 72
MLG DOOR
FIXTURE
BENCH
24 X 72
STUT FIXTURE
STRUT FIXTURE
JIG
60 x 168
JIG
60 x 168

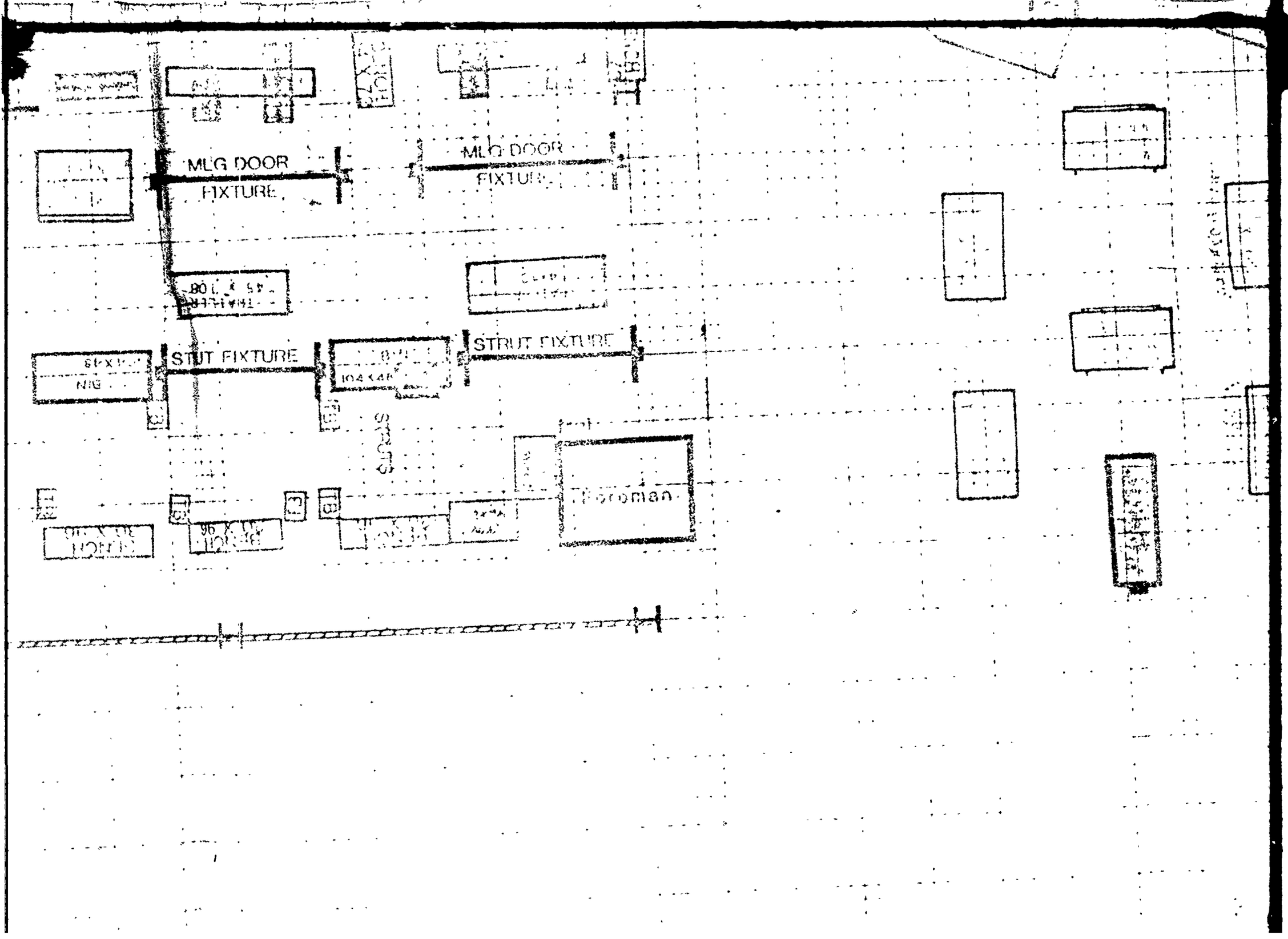
MLG DOOR
FIXTURE
MLG DOOR
STUT FIXTURE
STUT FIXTURE
Stroman

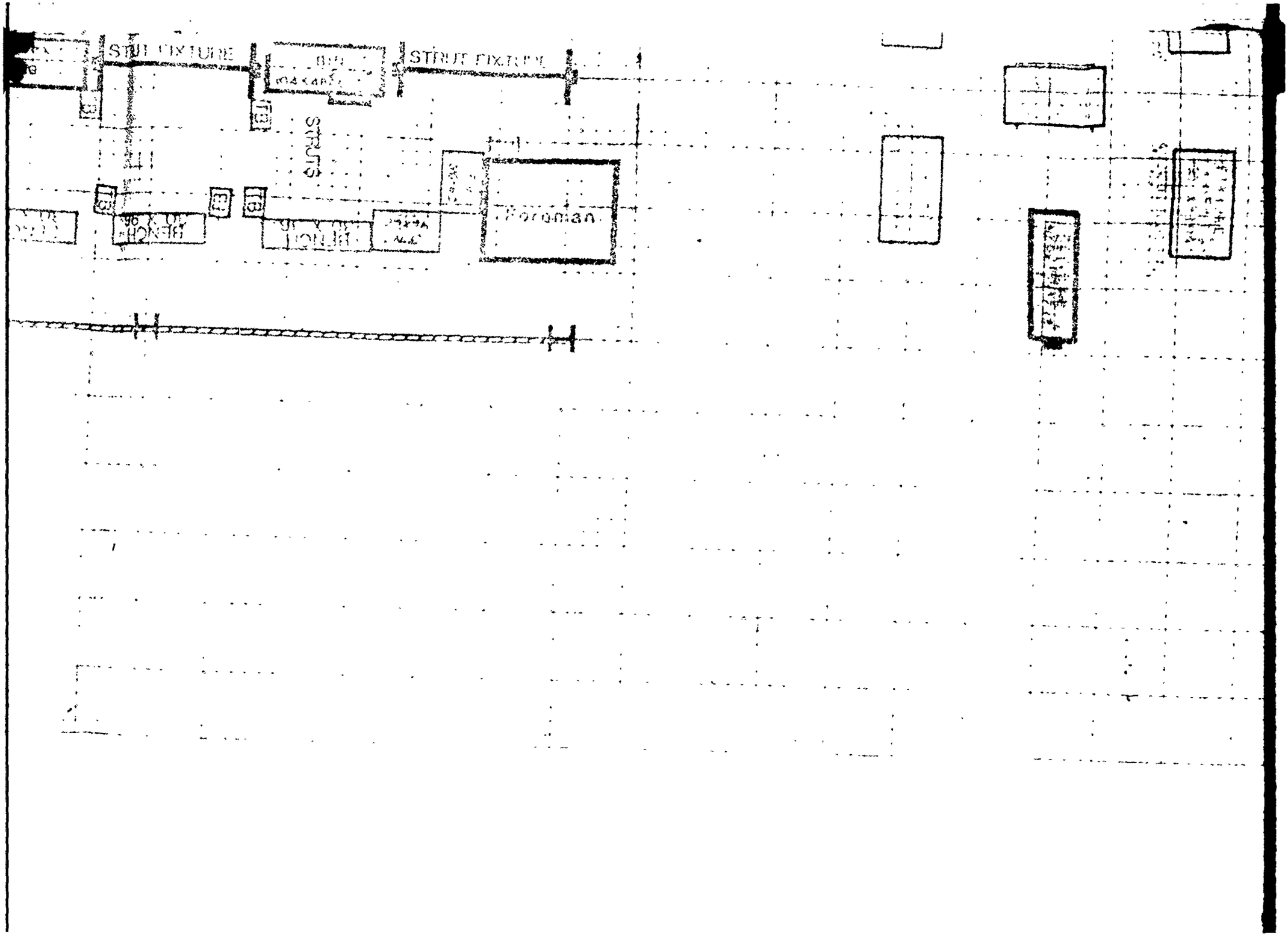
STRUT FIXTURE
STRUT FIXTURE
STRUTS
Foreman

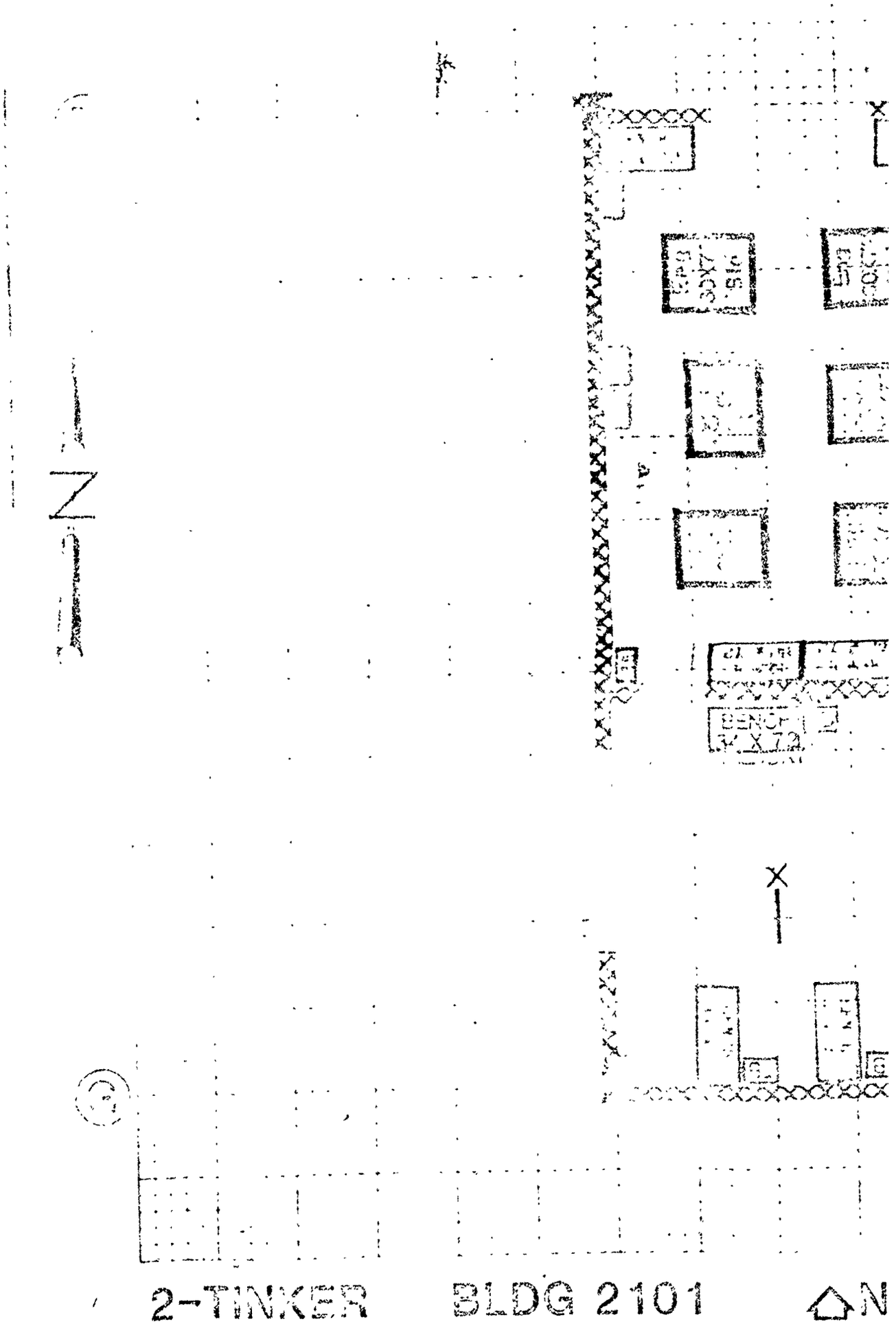
N
BENCH
2-TINKER BLDG 2101
N

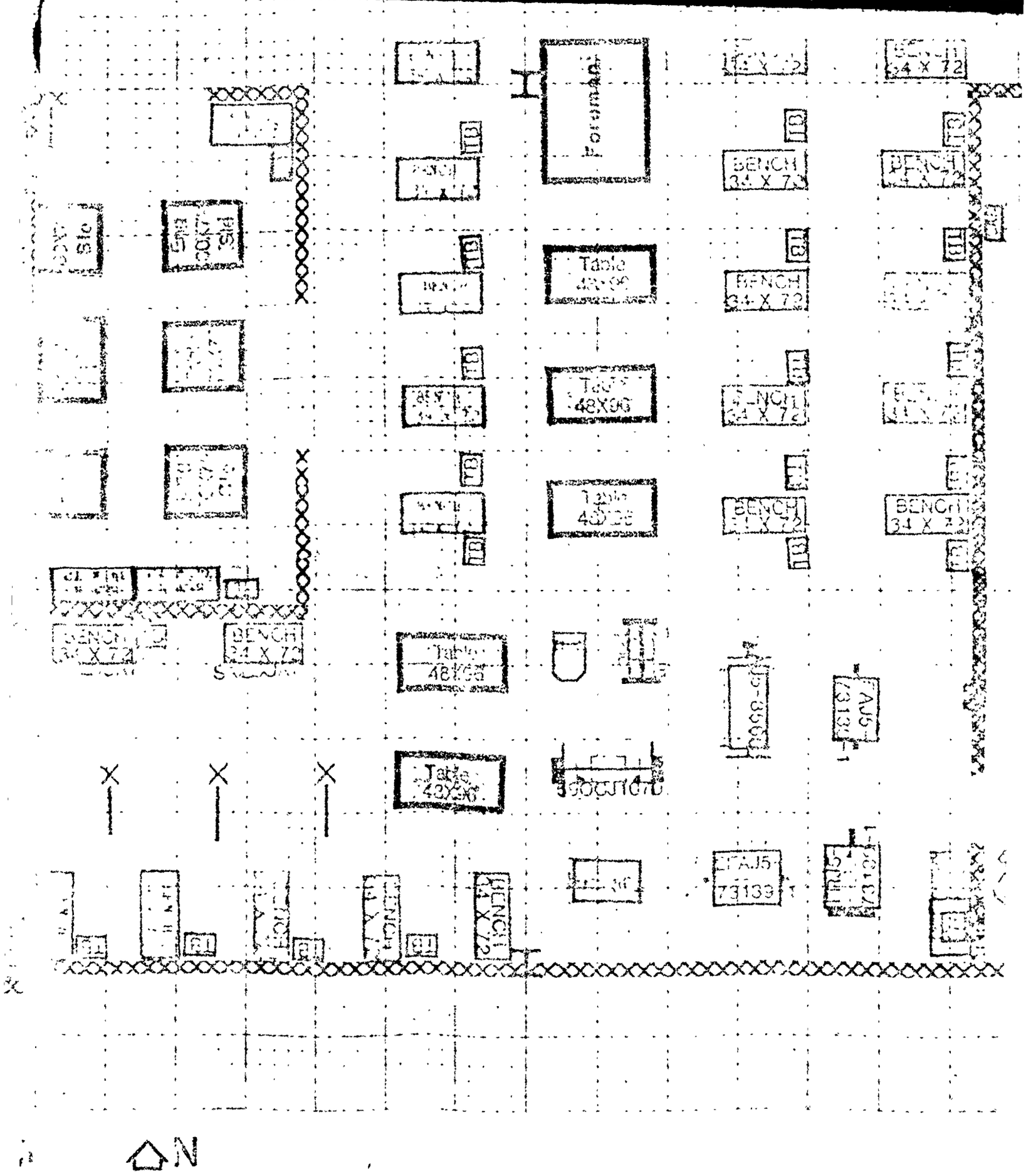
Foreman
BENCH 34 X 72
Table 48X96
Table 48X96
Table 48X96
Table 48X96
BENCH 34 X 72
BENCH 34 X 72
BENCH 34 X 72
BENCH 34 X 72
BENCH 34 X 72
BENCH 34 X 72
BENCH 34 X 72
BENCH 34 X 72
FAJ5 73139
FAJ5 73139
N

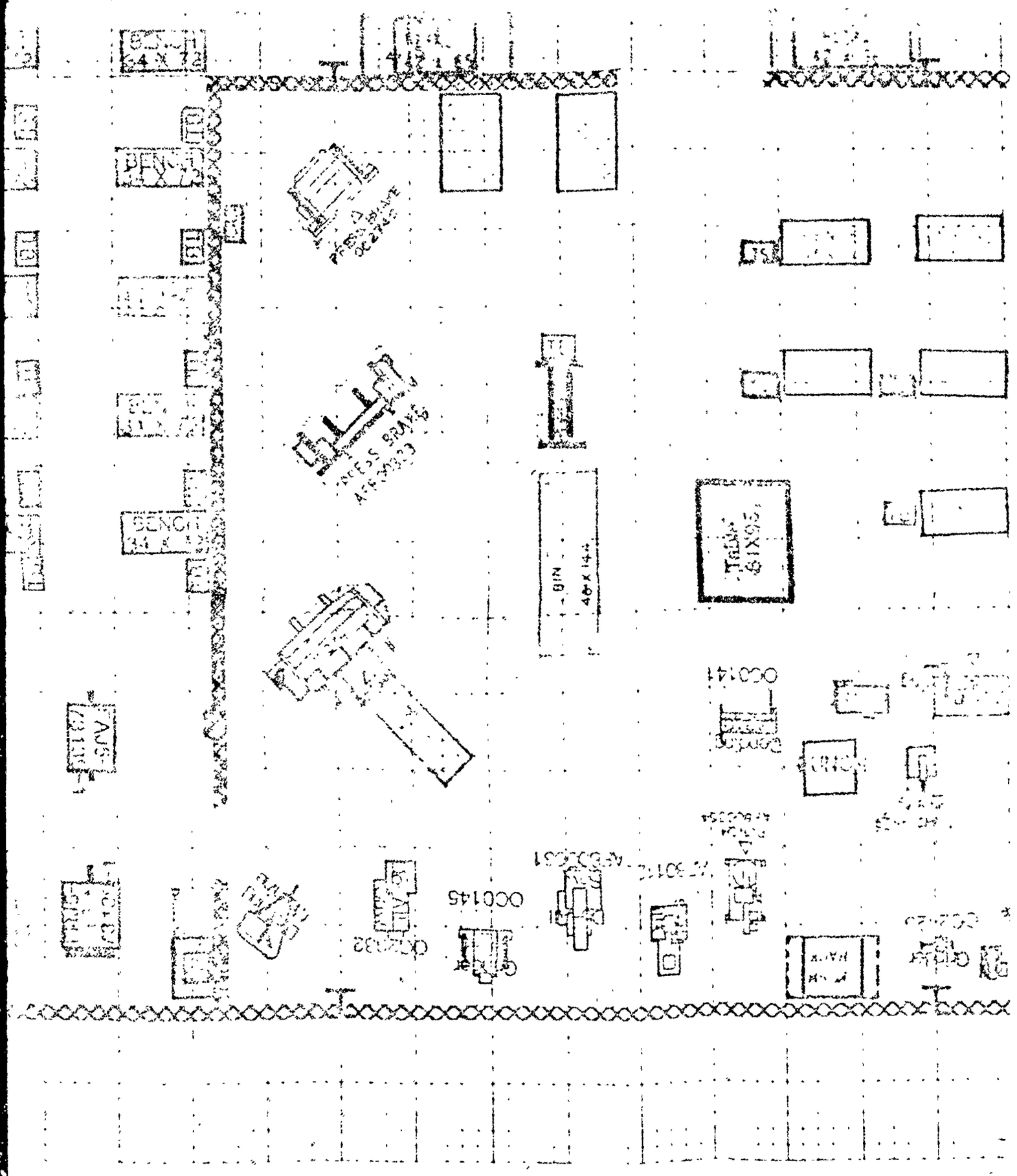
BENCH
BENCH
BIN
OC0141
OC0145

BENCH 34 X 72

BENCH 34 X 72

MLG DOOR FIXTURE

MLG DOOR FIXTURE

STRUT FIXTURE

BENCH 34 X 72

BENCH 34 X 72

MLG DOOR FIXTURE

MLG DOOR FIXTURE

STRUT FIXTURE

MLG DOOR FIXTURE

MLG DOOR FIXTURE

BENCH 34 X 72

BENCH 34 X 72

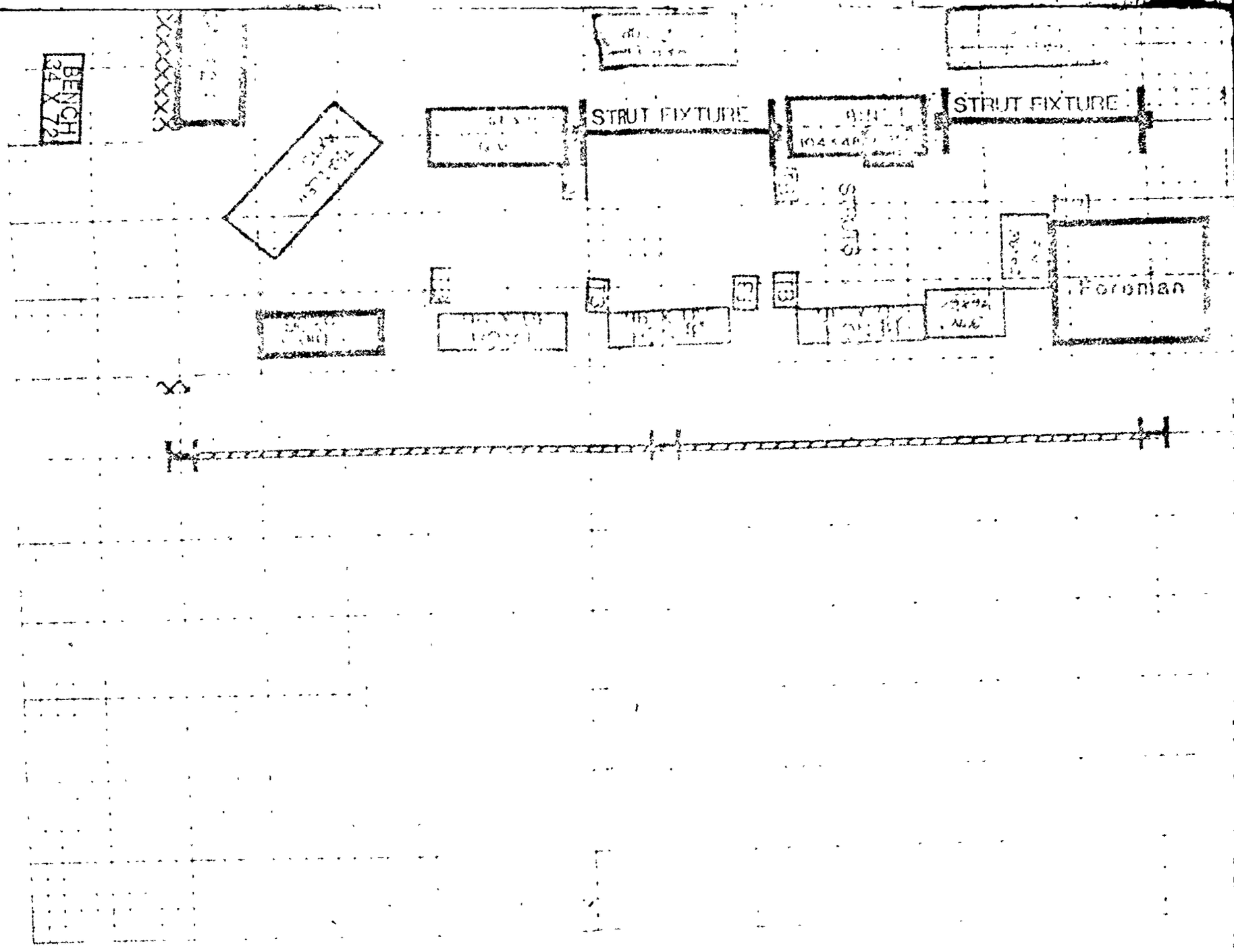
BENCH
24 X 72
STRUT FIXTURE
STRUT FIXTURE
Foreman

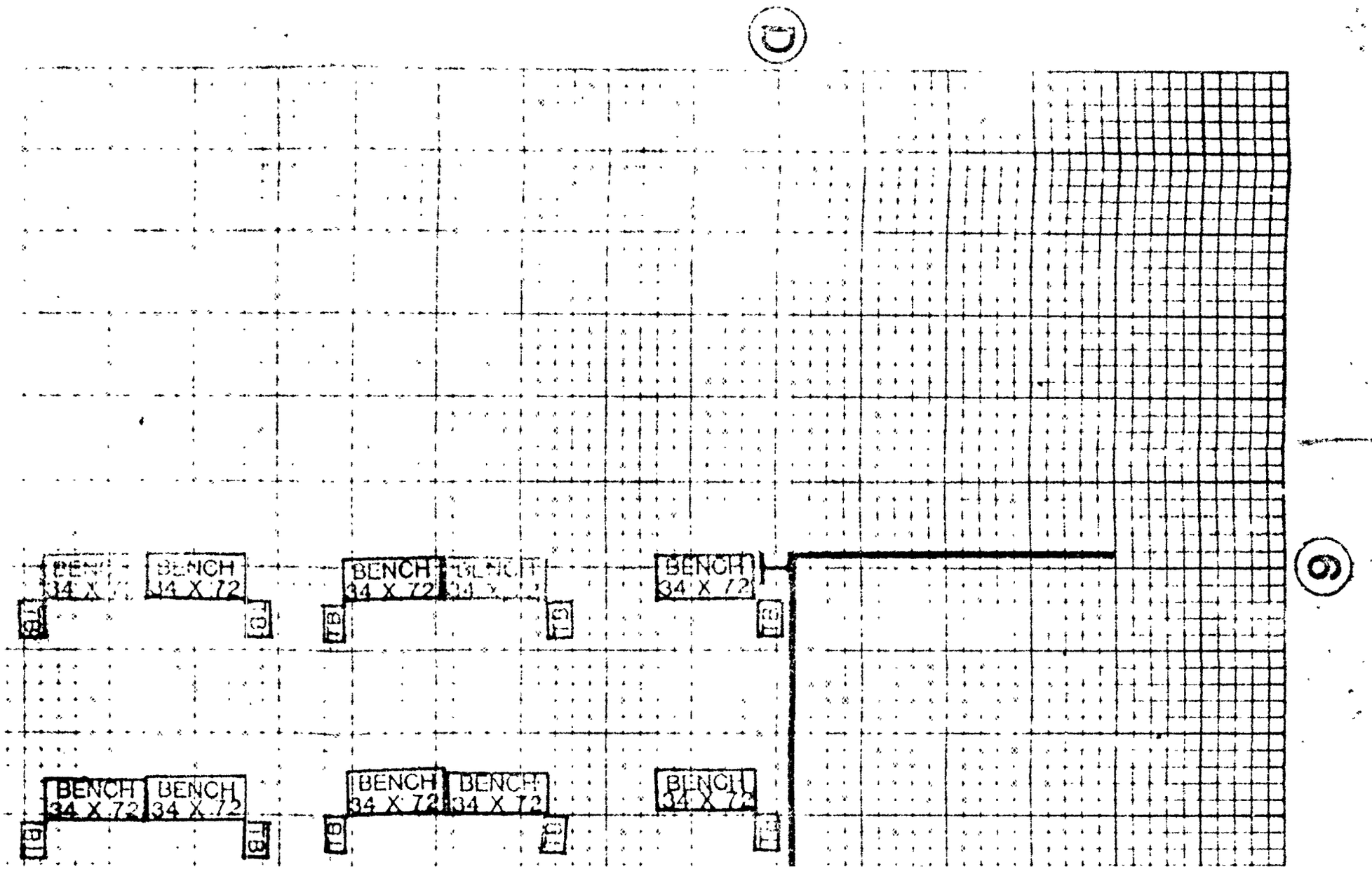
C
BENCH 34 X 72
BENCH 34 X 72
BENCH 34 X 72
BENCH 34 X 72
BENCH 34 X 72
BENCH 34 X 72
BENCH 34 X 72
BENCH 34 X 72
TB
TB
TB
TB
TB
TB
TB
TB
TB
TB
TB
TB

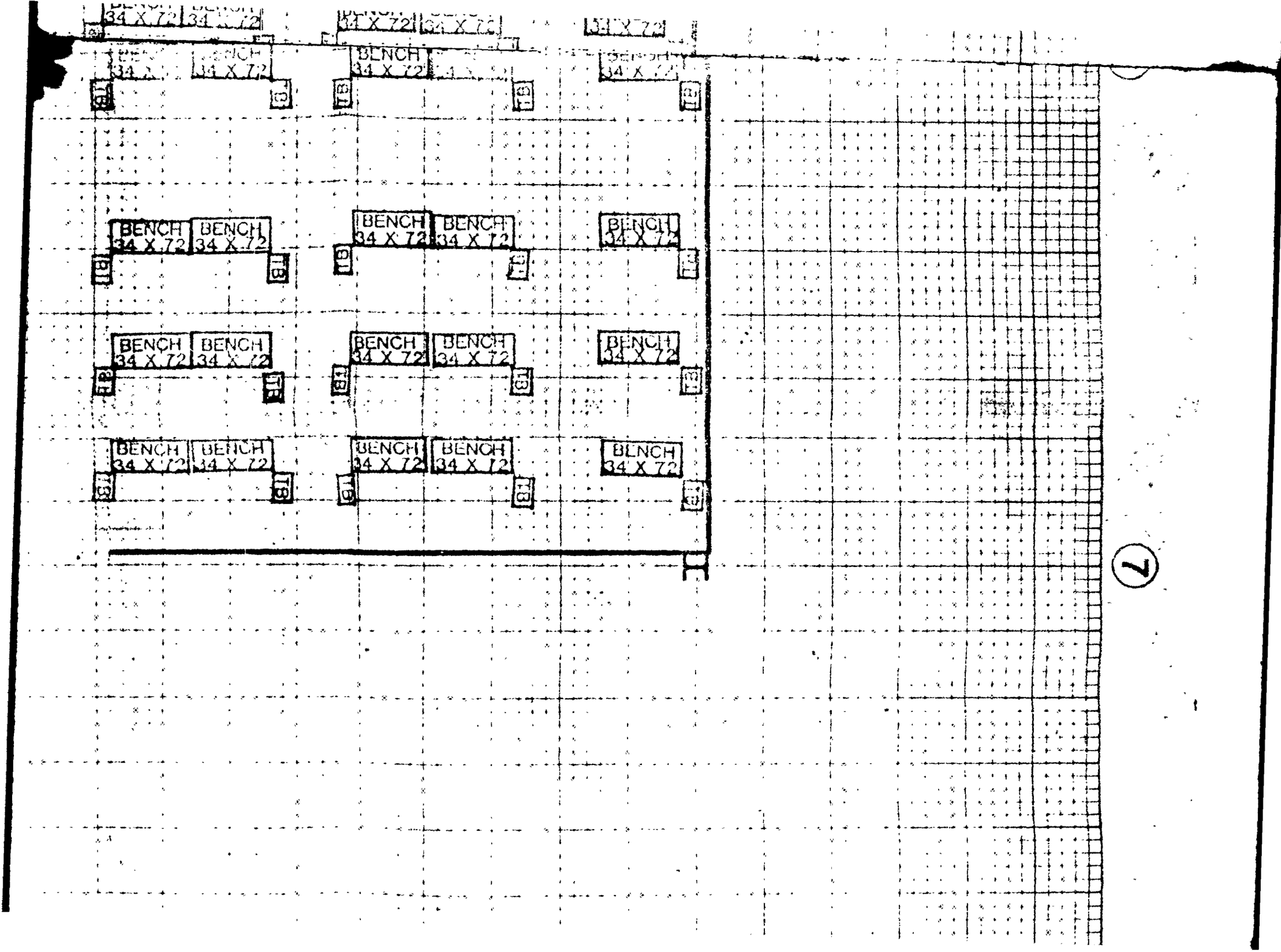
BENCH 34 X 72
BENCH 34 X 72
BENCH 34 X 72

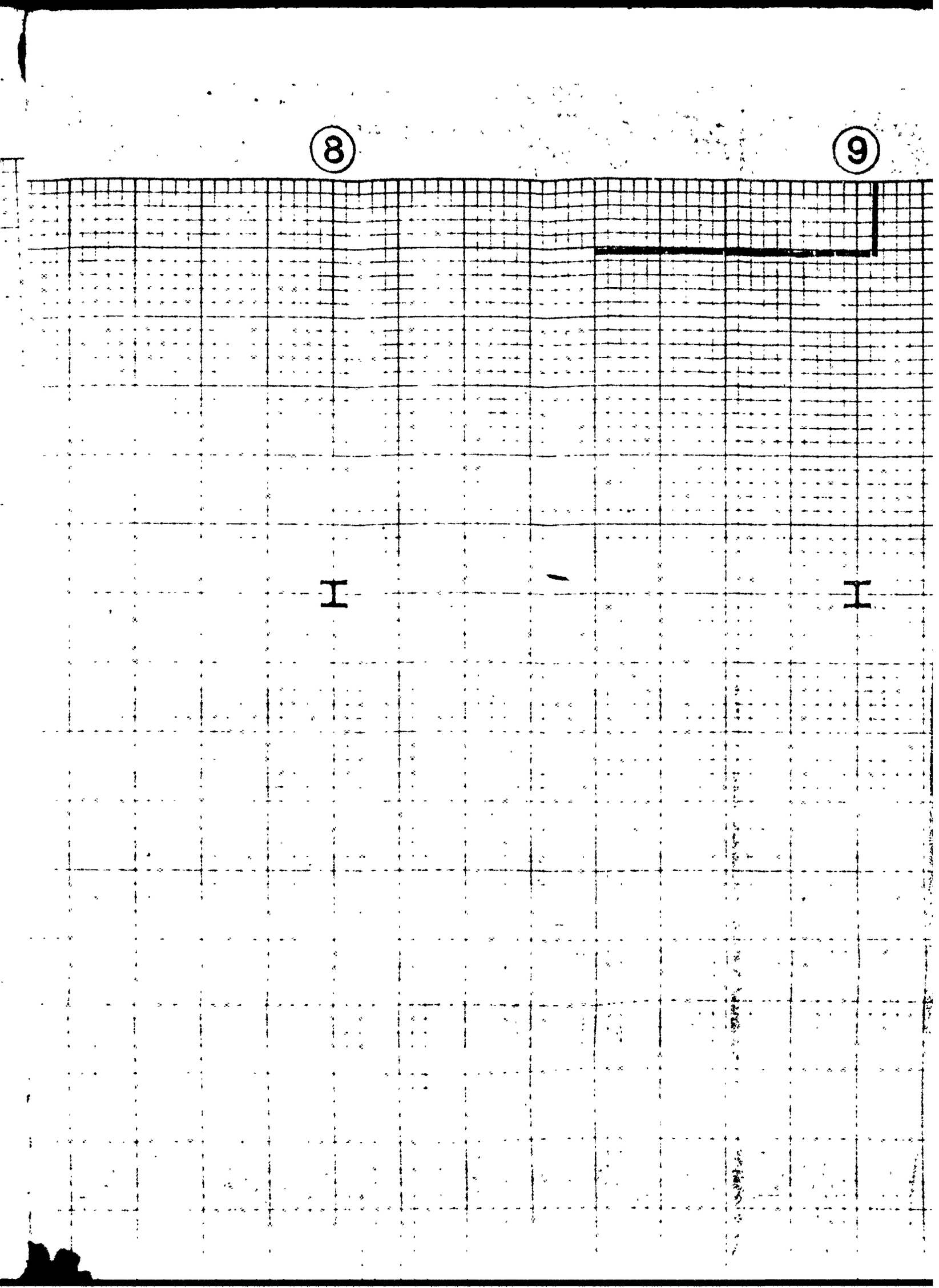
8
9

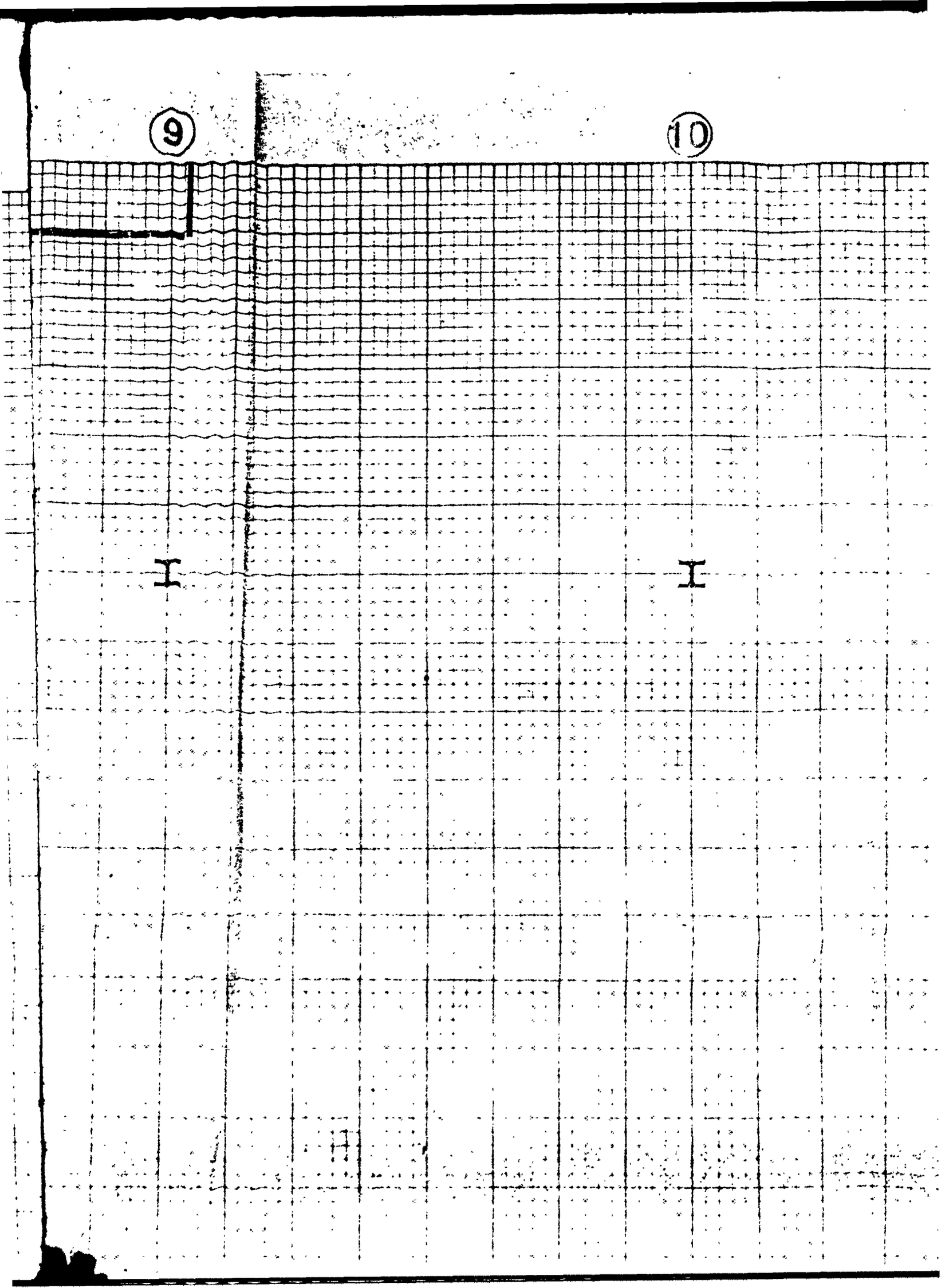
9
10


10
11

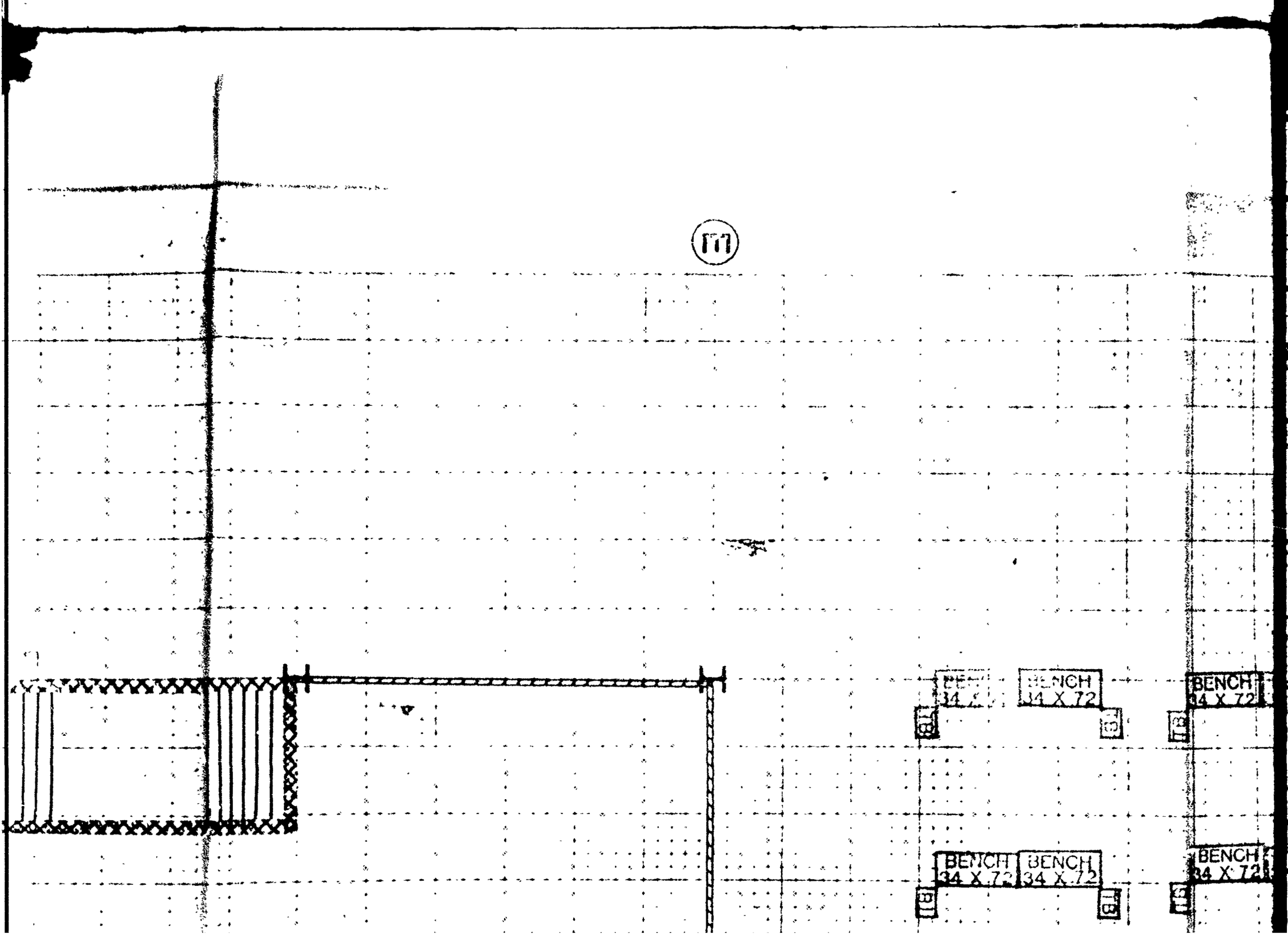
BENCH
34 X 72
BENCH
34 X 72
BENCH
34 X 72
BENCH
34 X 72
BENCH
34 X 72

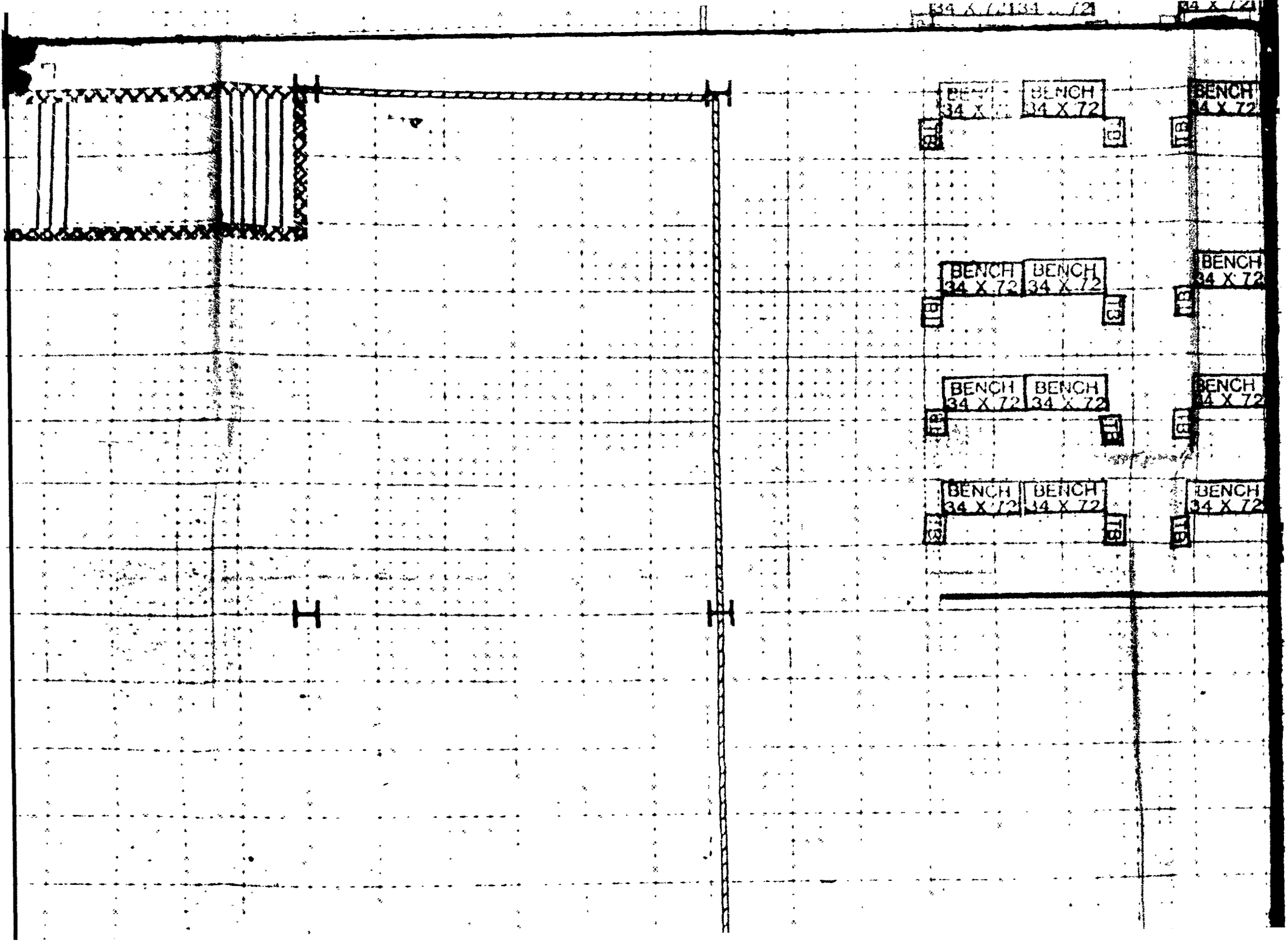
BENCH 34 X 72
BENCH 34 X 72
BENCH 34 X 72
BENCH 34 X 72
BENCH 34 X 72
BENCH 34 X 72
BENCH 34 X 72
BENCH 34 X 72
BENCH 34 X 72
BENCH 34 X 72
BENCH 34 X 72
BENCH 34 X 72

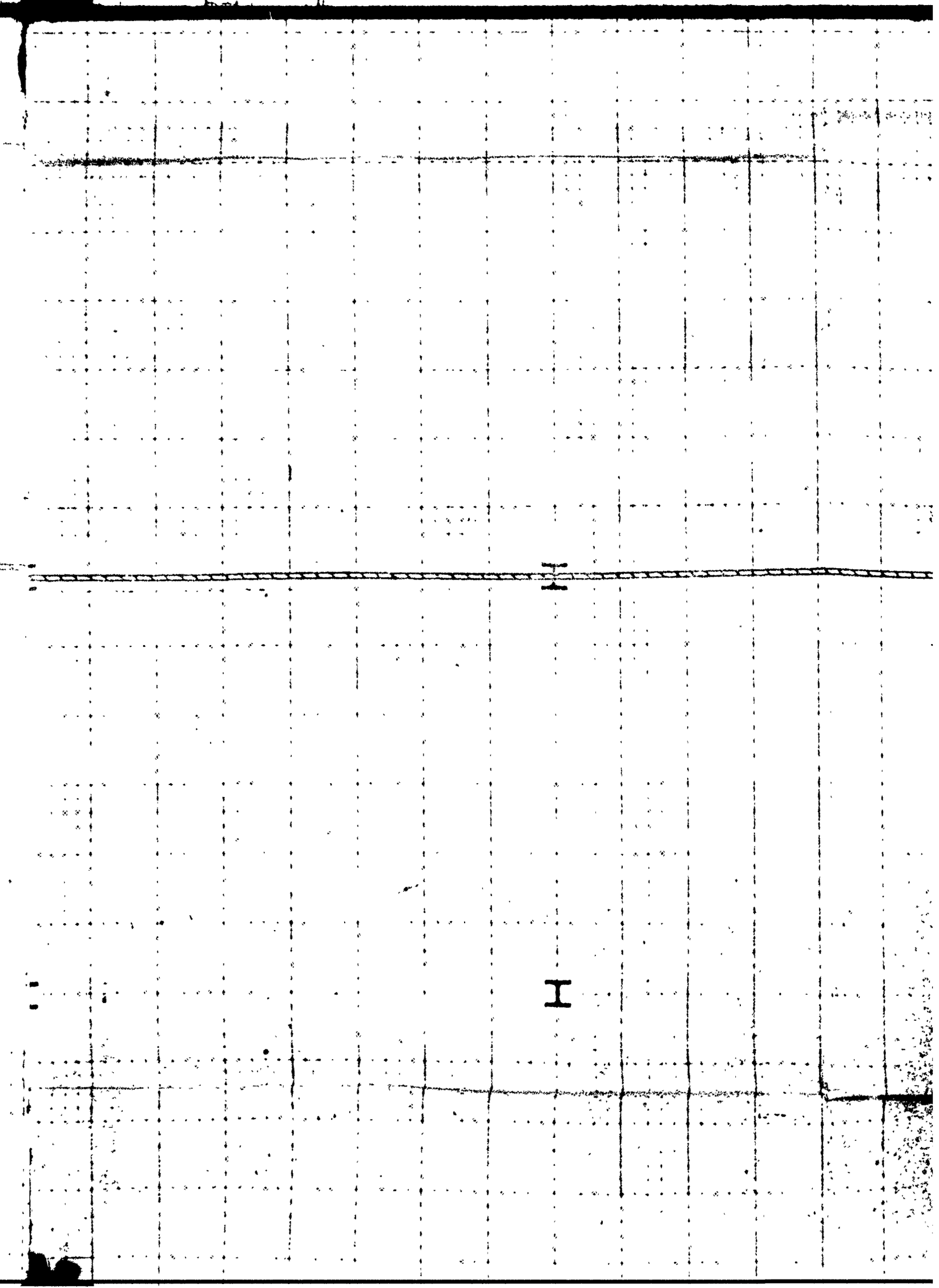

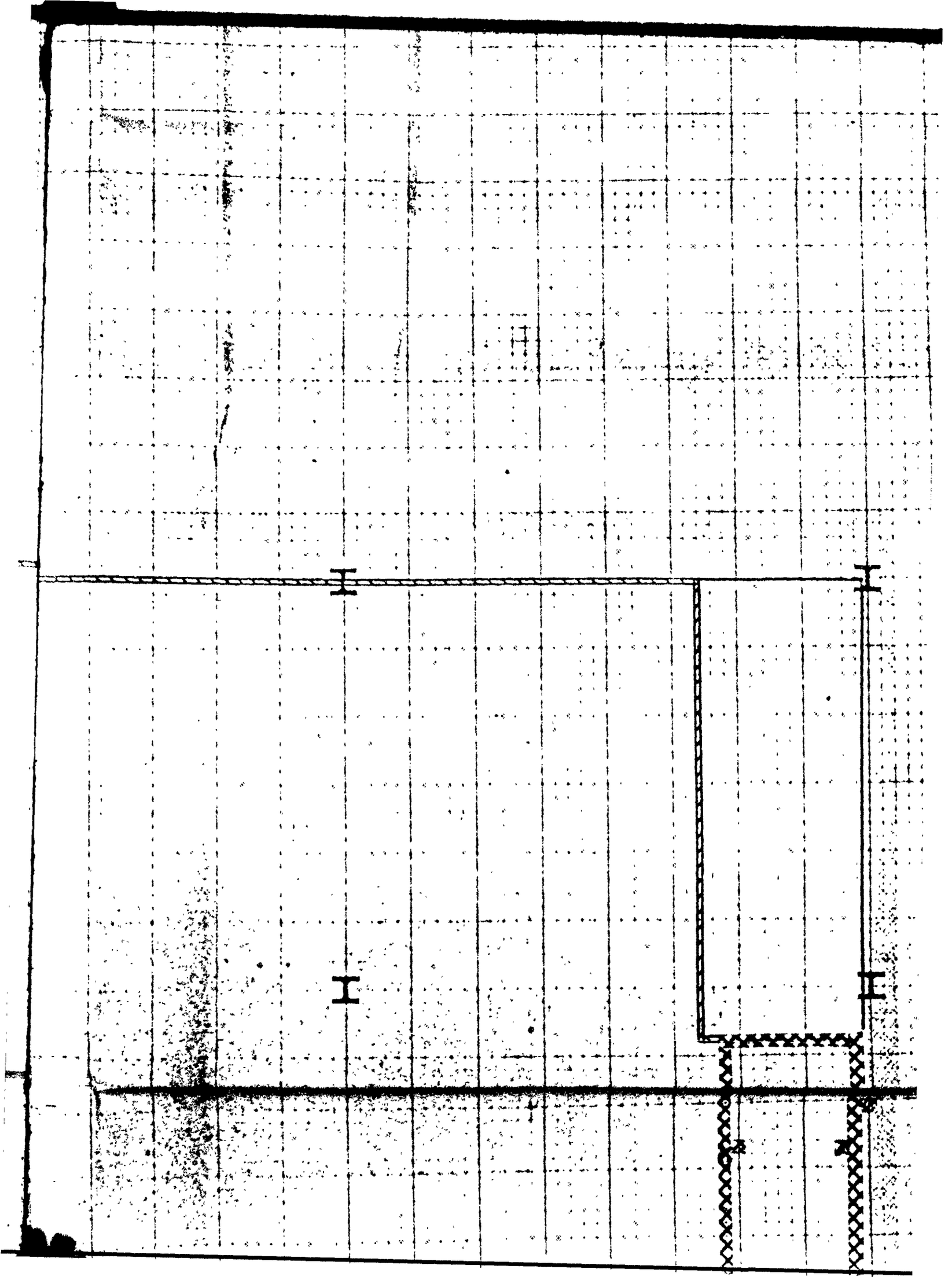

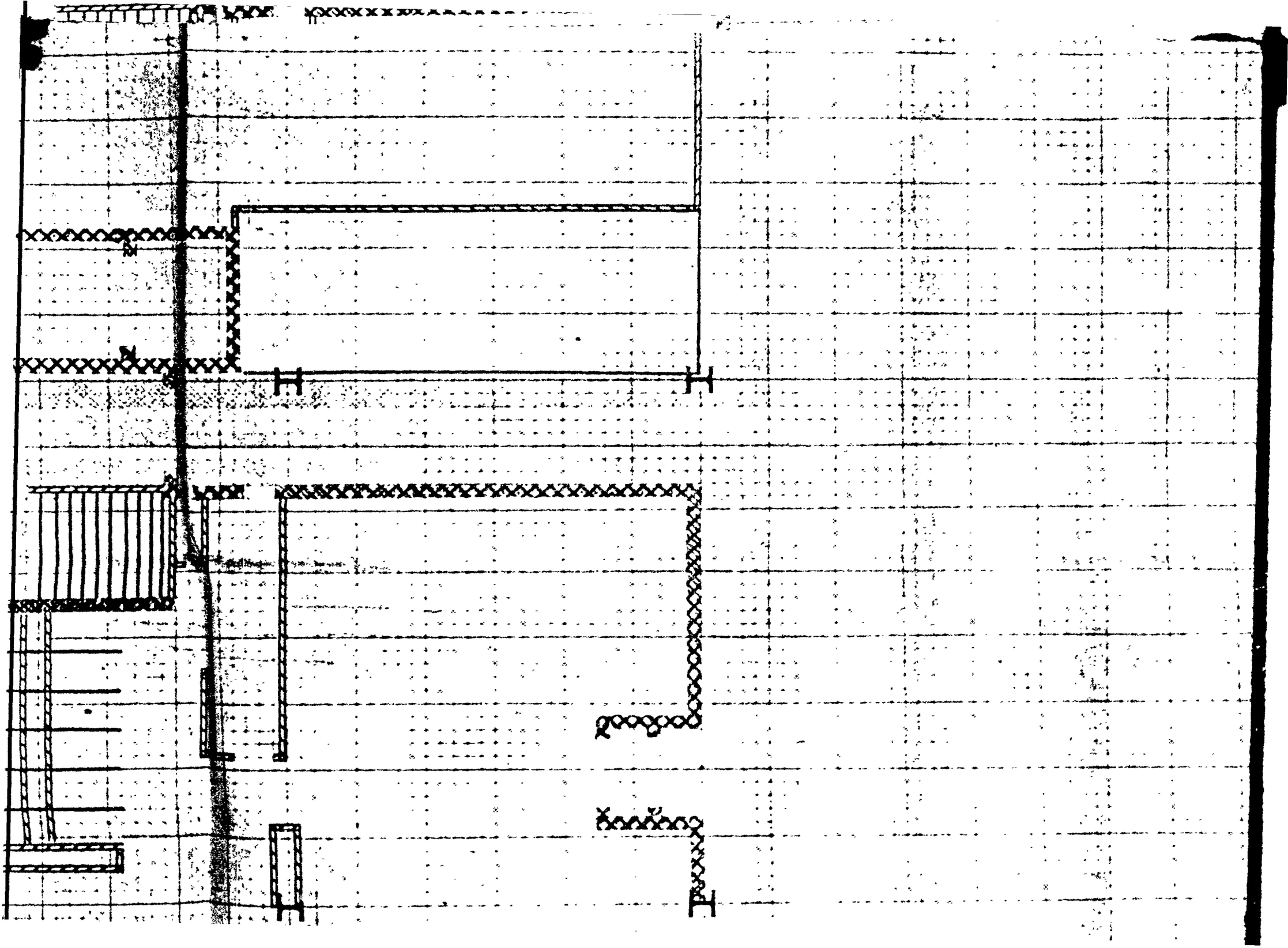

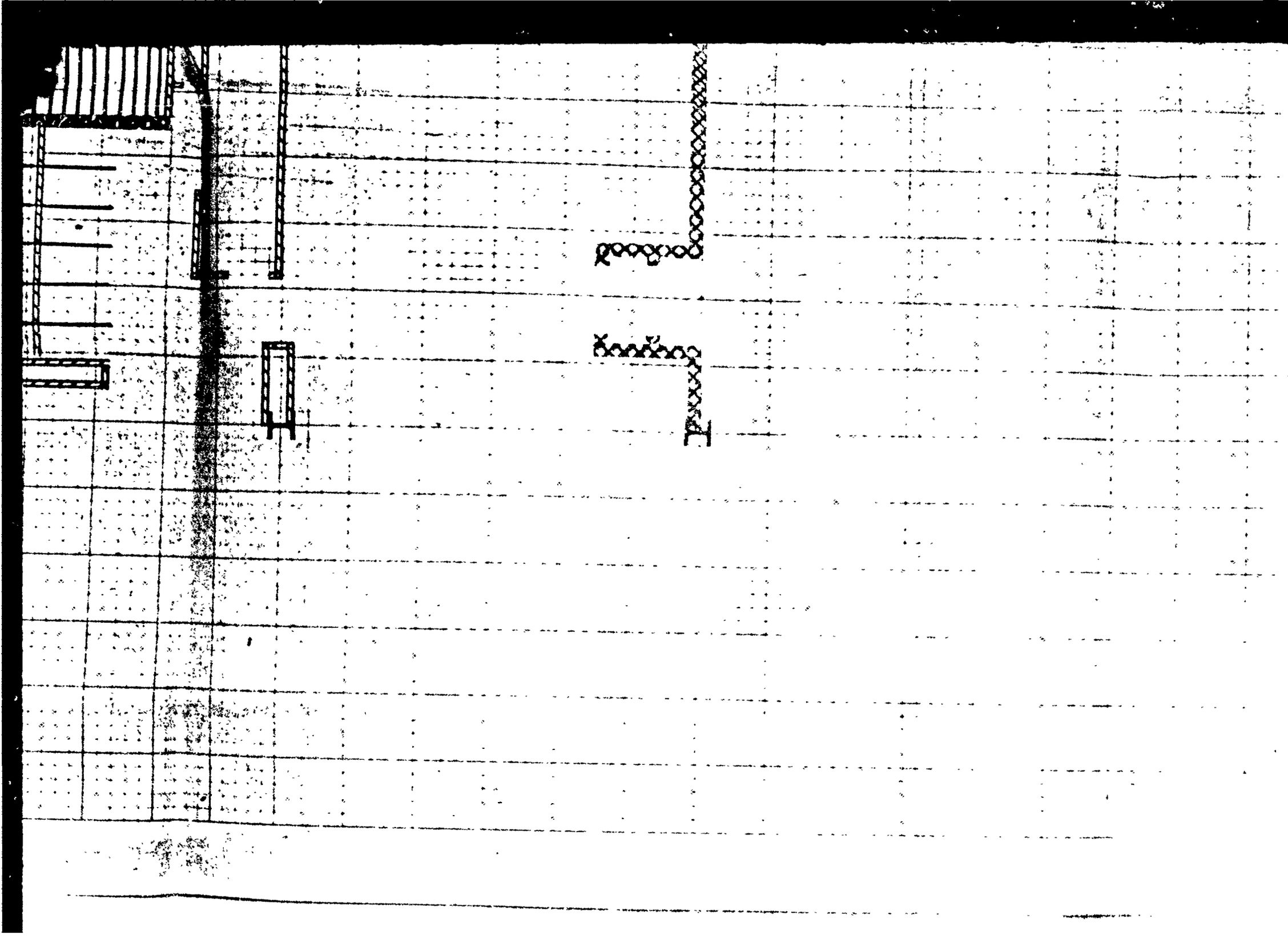

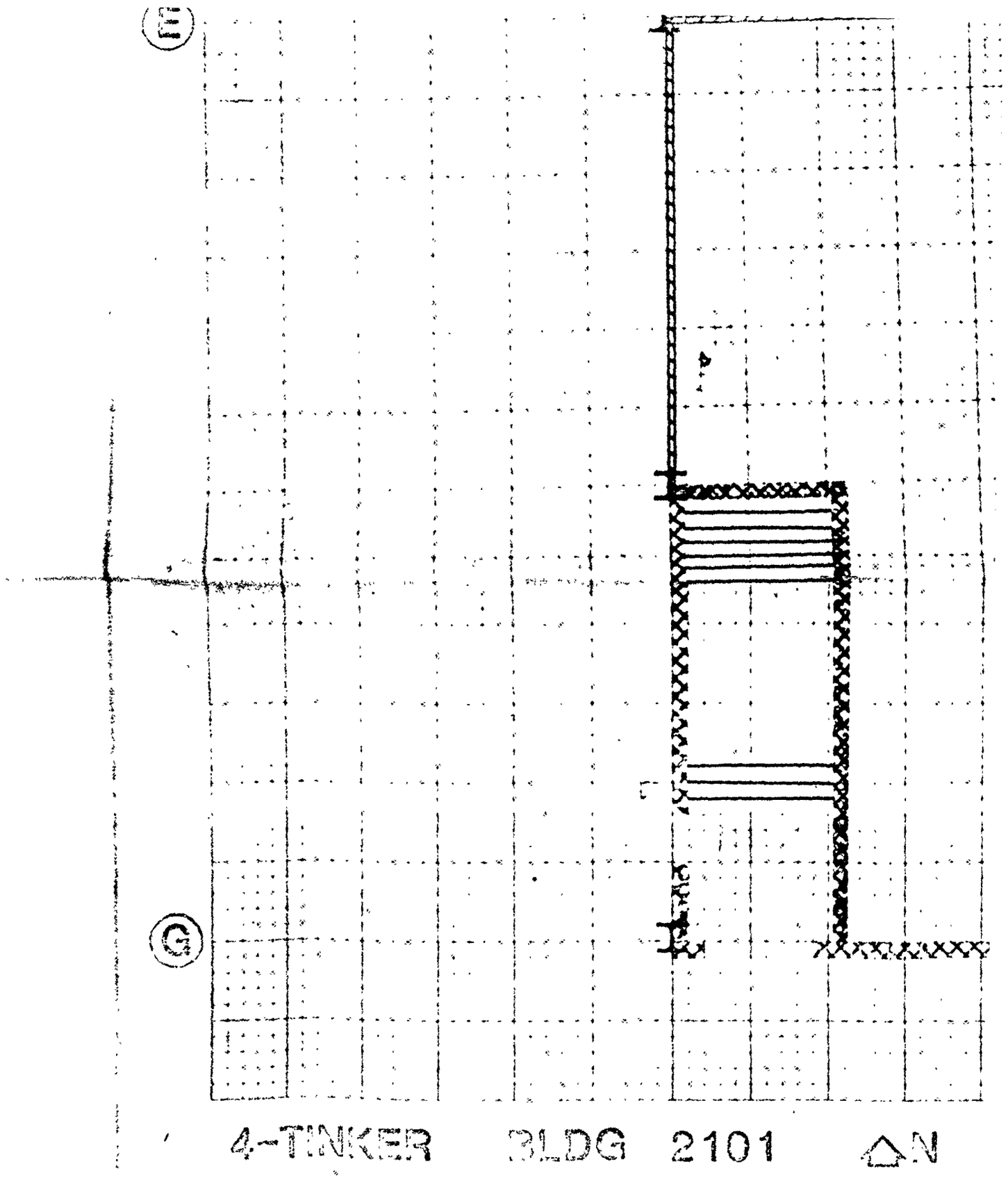
E
G
4-TINKER BLDG 2101
N

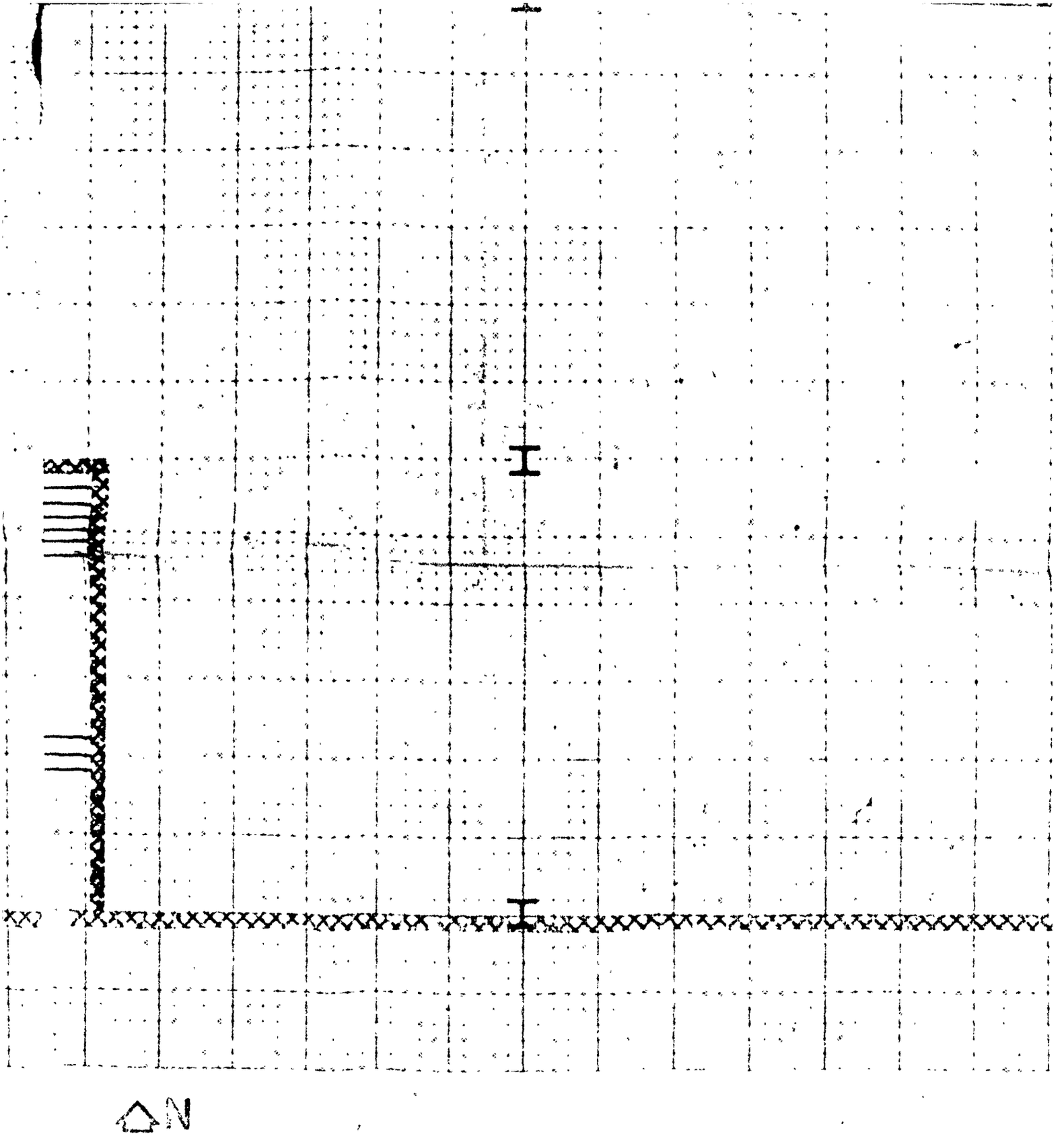
N

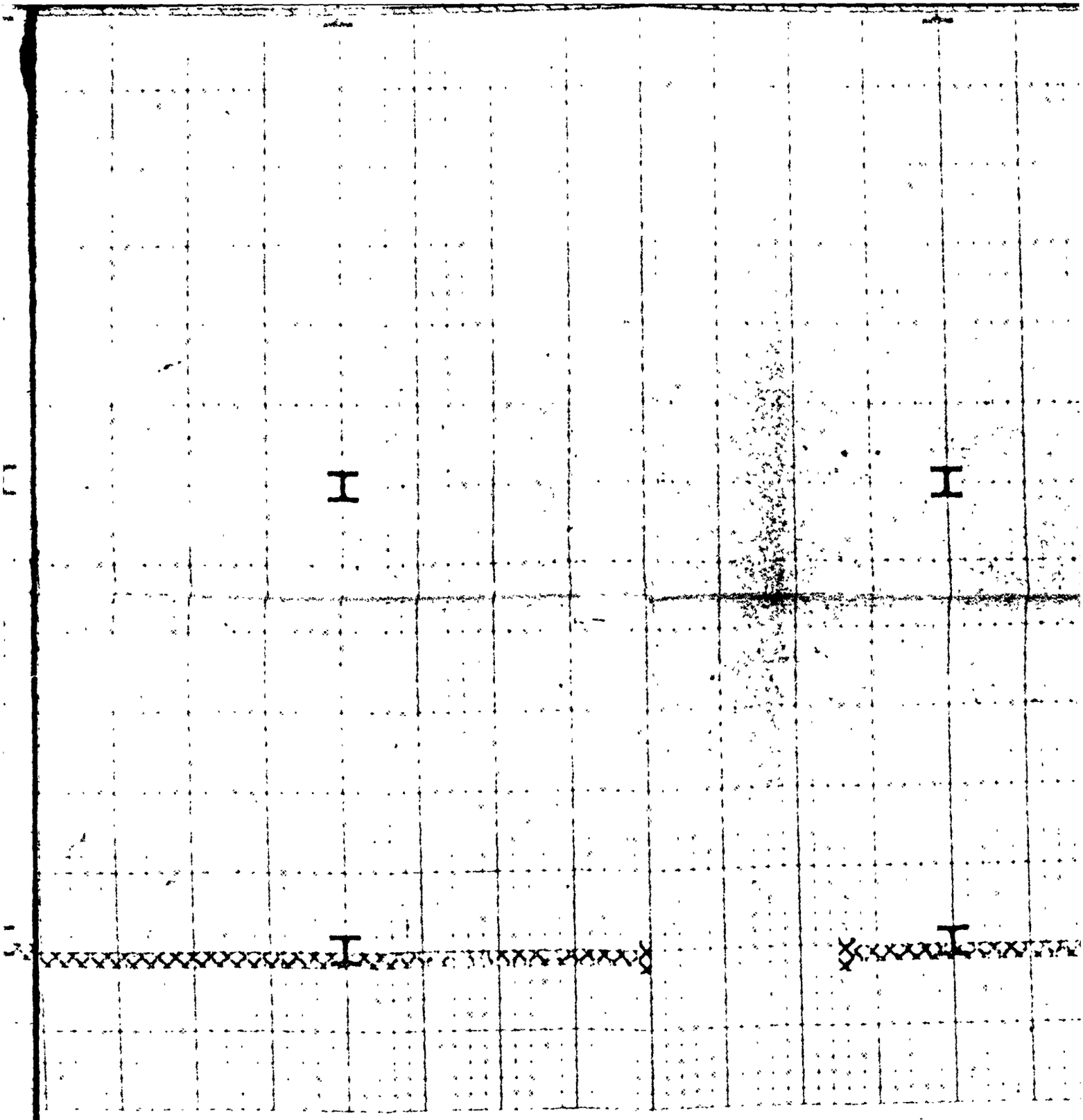

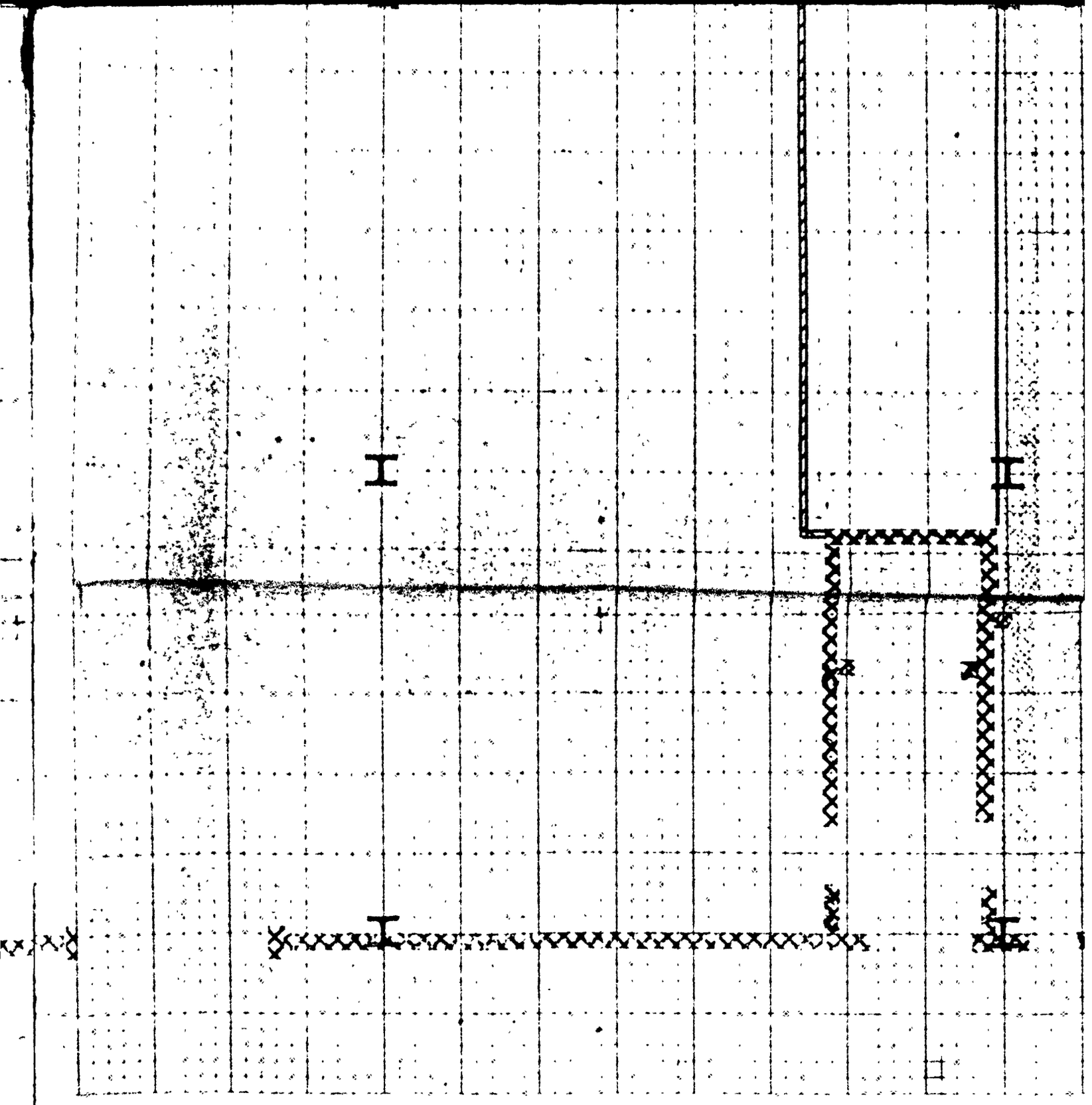

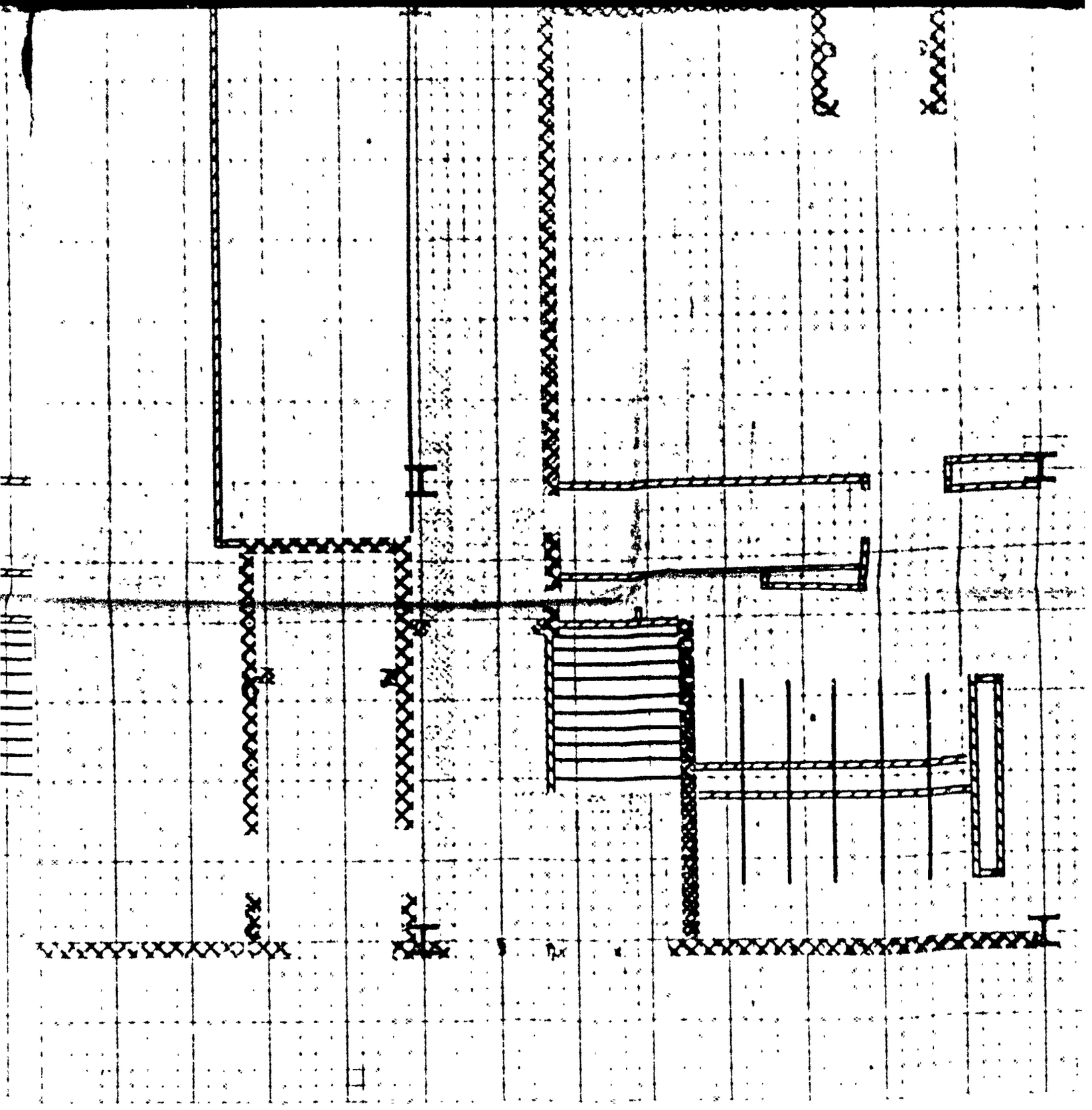

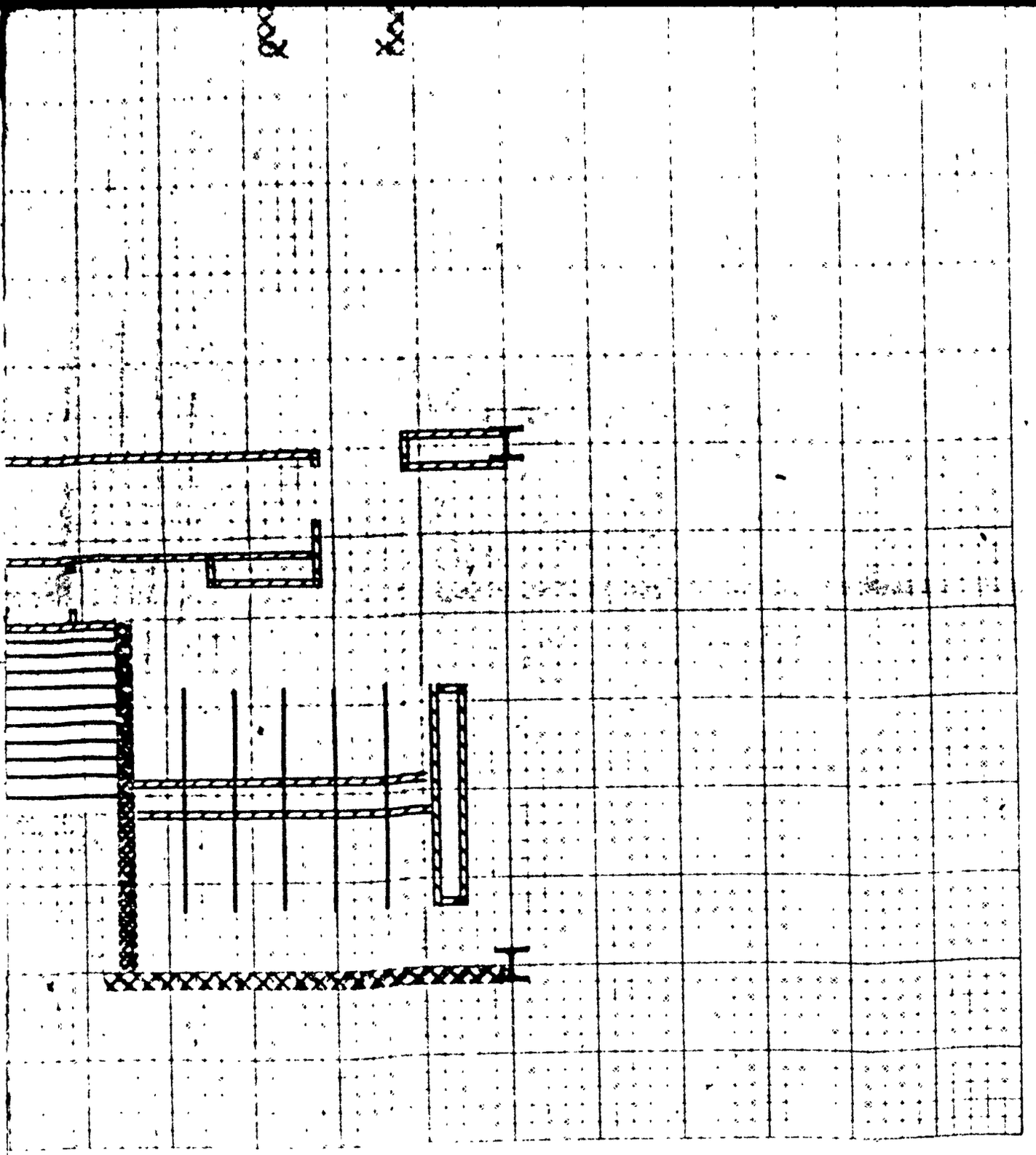

# TINKER AFB. INDEX


ACCOUNTING & FINANCE (1) A-5

AWCS (224) B-5

BASE EXCHANGE COMPLEX
BARBER SHOP, BANK, CLEANERS, EYEGLASS SHOP
SNACK BAR, & WATCH REPAIR (478) B-4
CLOTHING SALES (475) A-4
[illegible] (476) A-4
COMMISSARY (477) B-4

BASE OPERATIONS (240) B-6

BOWLING LANES (5703) B-1

SHOPETTE (728) A-3

COMMAND CONTROL SYSTEMS OFFICE (2010) B-5

CHAPEL (5708) B-2

CIVILIAN PERSONNEL (3001) B-7, B-8, C-7, C-8

CIVILIAN EMPLOYMENT (3705) C-8

DINING HALL (5905) B-1

DUMPSTERS (5910, 5909, 5908, 5904, 5903, 5902, 5915) B-1 (5911, 5910, 5908, 5922) A-1

FARCAMP E-4

GOLF CLUB HOUSE (6601) B-2

GYMNASIUM (6004) B-1

HEALTH CLUB (216) B-1

HOBBY SHOPS (6002) B-1

HOSPITAL (5801) B-1

HEADQUARTERS (FACC (3091) B-7, B-8, C-7, C-8

HEADQUARTERS 2854th ABG (460) A-4, A-5
B SQUADRON
C SQUADRON
AIR FORCE AID
BASE COMMANDER
CBPO
FAMILY SERVICES
HOUSING REFERRAL
IN-OUT PROCESSING
PASS & HOUSEHOLD GOODS
LEGAL SERVICES

HEADQUARTERS SOUTHERN COMMUNICATION AREA (4029) E-5

MOTOR POOL (2101) E-8

RED CLUB (6001) B-2

CHILD CARE CENTER (5510) B-1

OFFICERS' CLUB (5603) B-2

PASSENGER TERMINAL (244) B-6

PICNIC AREA (6600) A-2

PROCUREMENT (3) A-5, A-6

RECREATION CENTER (5702) B-2
LIBRARY
PUB

RIDING CLUB (6505) A-1

SECURITY POLICE (650) A-4

SERVICE STATION (740) A-4

SMALL BUSINESS OFFICE (7001) B-7, B-8, C-7, C-8

THEATRE (5711) B-1

TRANSIENT BILLETING (5604) B-2
RESERVATIONS CLERK
VOQ

TINKER ELEMENTARY SCHOOL C-1, C-2

AIRMEN FAMILY HOUSING B-1, C-1, C-2

OFFICER FAMILY HOUSING B-2, C-2

3rd MOBILE COMMUNICATIONS GROUP (7001) C-3

[illegible] (1043) E-4

[illegible] WEATHER SQUADRON (23) B-5, B-6

1984th COMMUNICATIONS SQUADRON (18) A-6

2953rd COMBAT LOGISTICS SPT SQUADRON (452) A-5

DET [illegible] 15th WEATHER SQUADRON (240) B-6

2854th CIVIL ENGINEERING SQUADRON (414, 417) A-5


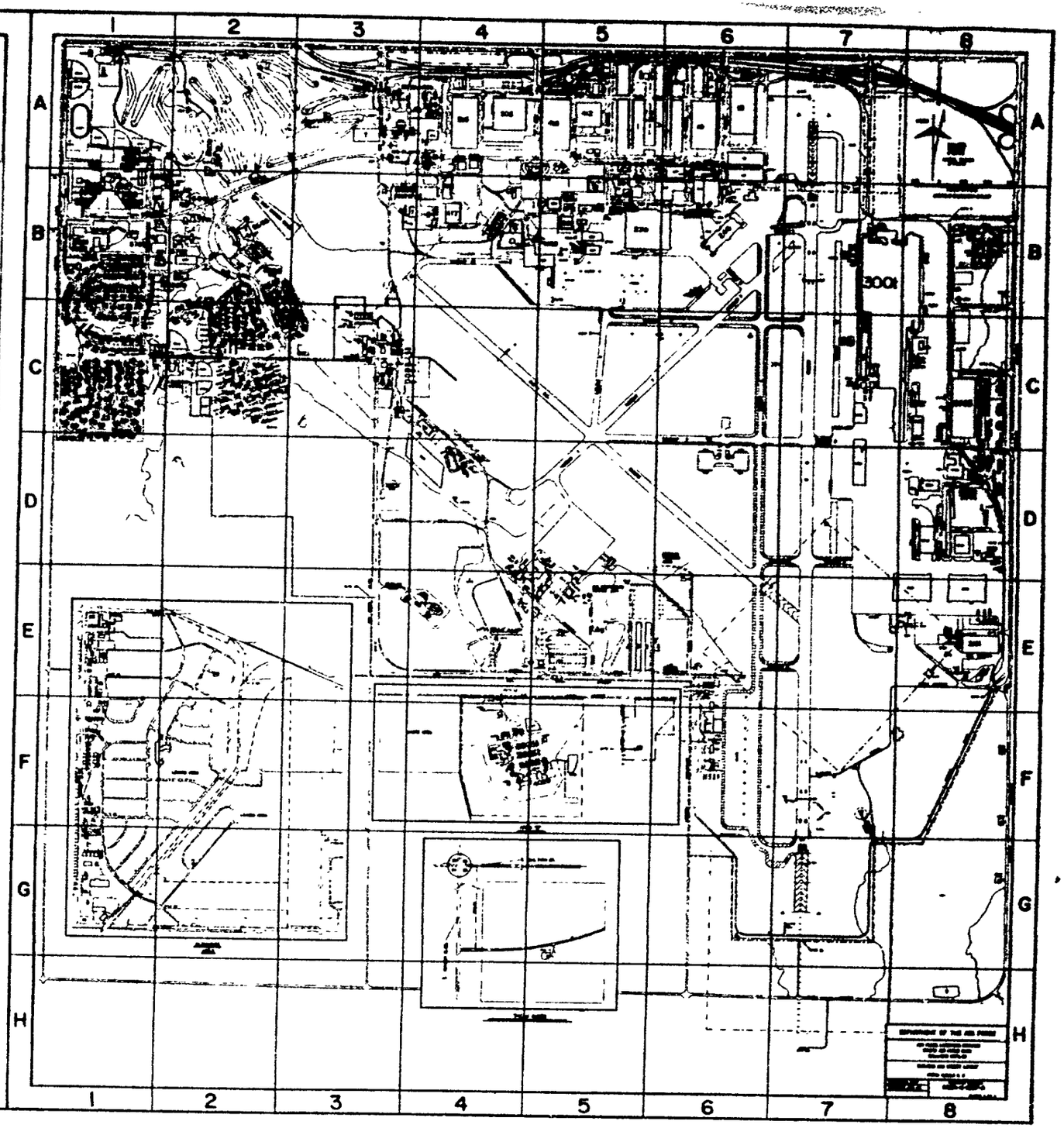

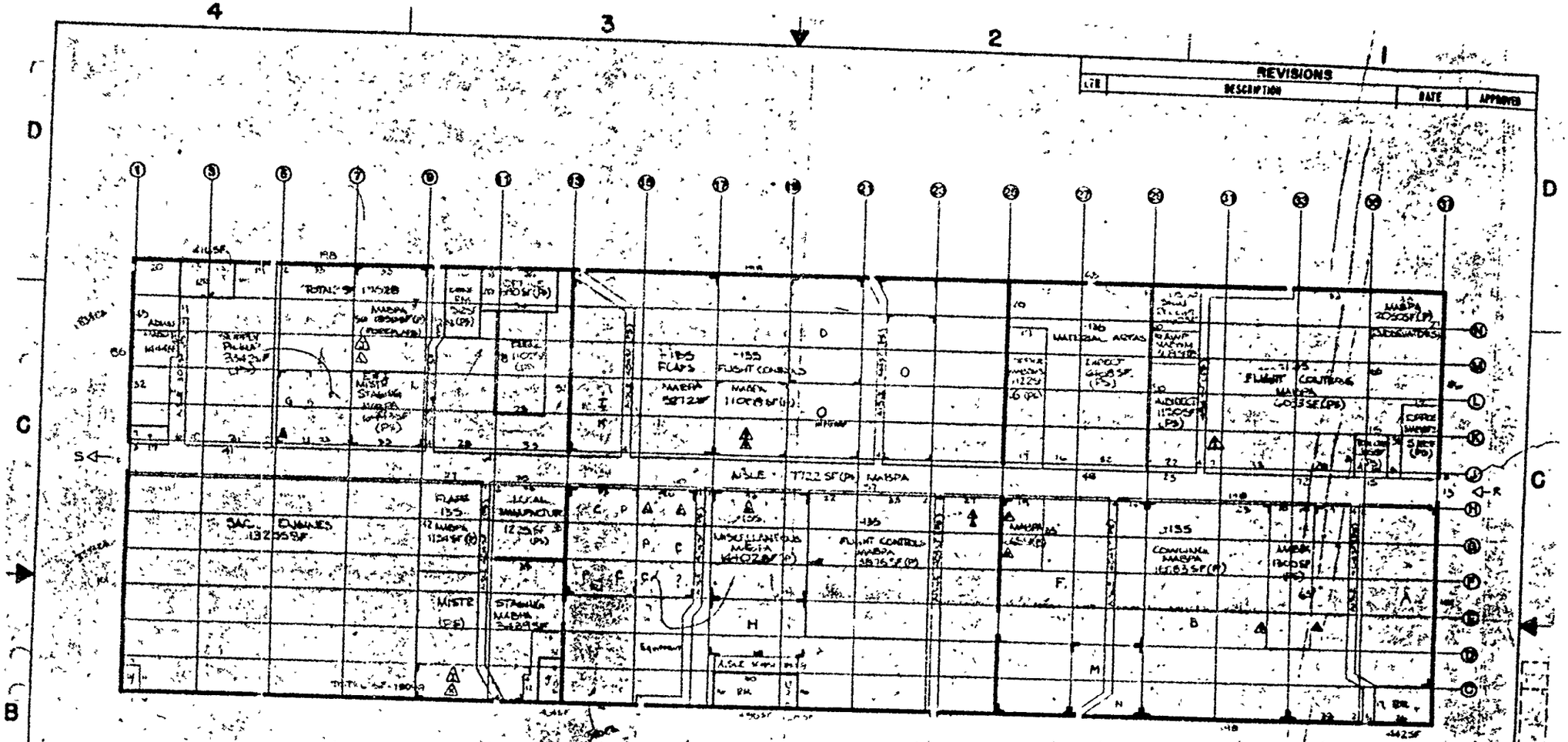

MABPA 56375 SF (P)
MABPA 45259 SF (PS)
TENANT 11430 SF DSF SUPPLY
TENANT 13255 SF SAC ENGINES
TENANT 128 SF MAQBA QUALITY
ADMIN 1444 SF
RESTROOM 1338 SF
UTILITY 541 SF ELECT, STEAM
TOTAL SF 118,800

13,200
105,600
61
44,000

REVISIONS

| LTR | DESCRIPTION | DATE | APPROVED |
|---|---|---|---|

BUILDING 95
SCALE 1/32"=1'

REVIEW BLOCK

| QUANTITY REQUIRED PER DASH NO | STH | NOMENCLATURE | CODE IDENT | IDENTIFYING NO | MATERIAL / SPECIFICATION | UNIT WT | ZONE | FIND NO. |
|---|---|---|---|---|---|---|---|---|

PARTS LIST

UNLESS OTHERWISE SPECIFIED
DIMENSIONS ARE IN INCHES — TOLERANCES ON
FRACTIONS ± DECIMALS ± ANGLES ±

U.S. AIR FORCE

TITLE
MASTER LAYOUT

SIZE C
MBE 840084
SCALE 1/32
SHEET 1 OF 1

CURRENT CODE IDENT NO | NEXT ASSEMBLY | USED ON
APPLICATION

AIR FORCE AUTHENTICATION
AIR FORCE RELEASE

AF FORM 1634

ENGINEERING DRAWING LAYOUT C