DTIC
ELECTE
JUN 2 3 1991
S C D

(2)

WL-TR-91-3039

AD-A237 817

MISSILE DATCOM

User's Manual - Rev 4/91

Kevin D. Bruns
Marvin E. Moore
Stan L. Stoy
Steven R. Vukelich
McDonnell Douglas Missile Systems Company
Saint Louis, Missouri 63166

William B. Blake
Wright Laboratory
Wright-Patterson Air Force Base, Ohio 45433-6553

APRIL 1991
FINAL REPORT FOR PERIOD MAY 1987 - APRIL 1991

APPROVED FOR PUBLIC RELEASE; DISTRIBUTION UNLIMITED

CONTROL DYNAMICS BRANCH
FLIGHT CONTROL DIVISION
FLIGHT DYNAMICS DIRECTORATE
WRIGHT LABORATORY
WRIGHT PATTERSON AIR FORCE BASE, OHIO 45433-6553

91-03591

91 6 2 012

NOTICE

When Government drawings, specifications, or other data are used for any purpose other than in connection with a definitely Government-related procurement, the United States Government incurs no responsibility or any obligation whatsoever. The fact that the government may have formulated or in any way supplied the said drawings, specifications, or other data, is not to be regarded by implication, or otherwise in any manner construed, as licensing the holder, or any other person or corporation; or as conveying any rights or permission to manufacture, use, or sell any patented invention that may in any way be related thereto.

This report is releasable to the National Technical Information Service (NTIS). At NTIS, it will be available to the general public, including foreign nations.

This technical report has been reviewed and is approved for publication.

Jerry E. Jenkins

JERRY E. JENKINS
Project Engineer
Control Dynamics Branch
Flight Control Division

David K. Bowser

DAVID K. BOWSER, Chief
Control Dynamics Branch
Flight Control Division

FOR THE COMMANDER

H. Max Davis

H. MAX DAVIS, Assistant for
Research and Technology
Flight Control Division
Flight Dynamics Directorate

If your address has changed, if you wish to be removed from our mailing list, or if the addressee is no longer employed by your organization please notify WL/FIGC, WPAFB, OH 45433-6553 to help us maintain a current mailing list.

Copies of this report should not be returned unless return is required by security considerations, contractual obligations, or notice on a specific document.

UNCLASSIFIED
SECURITY CLASSIFICATION OF THIS PAGE

REPORT DOCUMENTATION PAGE

Form Approved
OMB No. 0704-0188

1a REPORT SECURITY CLASSIFICATION UNCLASSIFIED	1b RESTRICTIVE MARKINGS
2a SECURITY CLASSIFICATION AUTHORITY	3 DISTRIBUTION/AVAILABILITY OF REPORT Approved for Public Release Distribution Unlimited
2b DECLASSIFICATION/DOWNGRADING SCHEDULE	
4 PERFORMING ORGANIZATION REPORT NUMBER(S)	5 MONITORING ORGANIZATION REPORT NUMBER(S) WL-TR-91-3039
6a NAME OF PERFORMING ORGANIZATION McDonnell Douglas 6b OFFICE SYMBOL (If applicable)	7a NAME OF MONITORING ORGANIZATION WL/FIGC
6c ADDRESS (City, State, and ZIP Code) P.O. Box 516 St Louis MO 63166	7b ADDRESS (City, State, and ZIP Code) WPAFB OH 45433-6553
8a NAME OF FUNDING/SPONSORING ORGANIZATION 8b OFFICE SYMBOL (If applicable)	9 PROCUREMENT INSTRUMENT IDENTIFICATION NUMBER F33615-87-C-3604
8c ADDRESS (City, State, and ZIP Code)	10 SOURCE OF FUNDING NUMBERS PROGRAM ELEMENT NO: 62201F PROJECT NO: 2403 TASK NO: 05 WORK UNIT ACCESSION NO: 82

11 TITLE (Include Security Classification)
Missile Datcom, User's Manual - Rev 4/91

12 PERSONAL AUTHOR(S)
K.D. Bruns, M. E. Moore, S. L. Stoy, S. R. Vukelich, W. B. Blake

13a TYPE OF REPORT	13b TIME COVERED	14 DATE OF REPORT (Year, Month, Day)	15 PAGE COUNT
Final Report	FROM 5/87 TO 4/91	April 1991	129

16 SUPPLEMENTARY NOTATION

17 COSATI CODES			18 SUBJECT TERMS (Continue on reverse if necessary and identify by block number)
FIELD	GROUP	SUB-GROUP	Computer Program Stability and Control Aerodynamics Missiles

19 ABSTRACT (Continue on reverse if necessary and identify by block number)

This report discusses the 4/91 Version of Missile Datcom. It supersedes AFWAL-TR-86-3091.

20 DISTRIBUTION/AVAILABILITY OF ABSTRACT ☒ UNCLASSIFIED/UNLIMITED ☐ SAME AS RPT ☐ DTIC USERS	21 ABSTRACT SECURITY CLASSIFICATION UNCLASSIFIED
22a NAME OF RESPONSIBLE INDIVIDUAL WILLIAM B. BLAKE	22b TELEPHONE (Include Area Code) (513) 255-6764 22c OFFICE SYMBOL WL/FIGCC

DD Form 1473, JUN 86 Previous editions are obsolete

SECURITY CLASSIFICATION OF THIS PAGE
UNCLASSIFIED

PREFACE

This report was prepared for the Flight Dynamics Directorate of the Wright Laboratory, Wright-Patterson AFB, Ohio, under Contract F33615-87-C-3604. It documents Missile Datcom Rev 4/91. The work was performed by the McDonnell Douglas Missile Systems Company, St. Louis, Missouri, a division of the McDonnell Douglas Corporation. The period of performance was May 1987 to April 1991. Mr Jerry E. Jenkins was the Air Force project engineer. This report supersedes AFWAL-TR-86-3091 (Volume II), produced under Contract F33615-81-C-3617, which documents Missile Datcom Rev 11/85, 12/88, and 7/89.

A list of the Missile Datcom Principal Investigators and individuals who made significant contributions to the development of this program is provided below.

PRINCIPAL INVESTIGATORS:
Steven R. Vukelich
Stan L. Stoy
Andrew A. Jenn
Kurt D. Bausch
John E. Williams

CONTRIBUTORS:
Jerry E. Jenkins
Frank M. Sawyer
William B. Blake
Keith A. Burns
Marvin E. Moore
Kevin D. Bruns

Accession For
Distribution/
Availability Codes
Dist | Avail and/or Special
A-1

The Flight Dynamics Directorate is committed to the continuing development of Missile Datcom. This development is dependent to a large extent on user feedback. Questions about the program or suggestions for future improvements to the program should be directed to Mr. William Blake, WL/FIGC, Wright-Patterson AFB, Ohio 45433, phone (513) 255-6764.

BACKGROUND TO MISSILE DATCOM

Missile Datcom Rev 4/91 is the fifth in a series of releases.

In the late 1970's, the Tri-Service Committee on Missiles and Projectile Aerodynamics defined the need for a Missile Datcom type prediction tool. The Air Force was chosen as the lead service for the effort. A contract was subsequently awarded to the McDonnell Douglas Astronautics Company (F33615-80-C-3605) to recommend specific methods for inclusion into a potential computer program and identify areas where further work was needed. The final report from this effort, "Development Feasibility of Missile Datcom" (AFWAL-TR-81-3130) was published in October 1981.

In September 1981, the Missile Datcom Development Contract, (F33615-81-C-3617) was awarded to the McDonnell Douglas Astronautics Company. It subdivided the effort into four distinct phases. The initial release of the program in August 1984 represented the "Phase I" interim capability. Cases run using this version were limited to axisymmetric bodies with no more than eight fins total (two sets with up to four fins each).

The second release of the program (Rev 11/85) represented the "Phase IV" capability. This was the final version generated under Air Force Contract F33615-81-C-3617. It added capability for elliptic bodies, inlets at supersonic speeds, dynamic derivatives, experimental data substitution, and configuration incrementing. It also increased the permissible number of fins to thirty two (four sets with up to eight fins each). Two volumes of documentation (User's Manual and Program Implementation Guide), dated November 1985, were printed.

The third release (Rev 12/88) coincided with the publishing of AFWAL-TR-86-3091. This version expanded the experimental data substitution option and dynamic derivative capability. Errors from the 11/85 version were also corrected. Volume I of TR-86-3091 (Final Report) discusses the methods selected for incorporation into Missile Datcom. Volume II (User's Manual) is an updated version of the November 1985 manual. These reports are available from DTIC as ADA-211086 and ADA-210128 respectively.

The fourth release (Rev 7/89) added little new capability, its primary purpose was to correct coding errors, expand the body-alone dynamic derivative capability, and modify the equivalent angle-of-attack formulation. No new documentation was published.

Feedback from users and a user survey revealed many areas of desired improvement for the program. Two contracts (F33615-86-C-3626 and F33615-87-C-3604) were awarded to Nielsen Engineering and Research, and McDonnell Douglas,

respectively, to develop new or improved methodology. The 4/91 version of the program is the end product from these contracts. The major changes to the program and associated reference material are listed below:

(a) A prediction method for supersonic plume/afterbody interactions has been added (refs. 1,2).
(b) The method for inlet aerodynamics has been replaced with a new method (refs 1,3). This method is applicable at subsonic and supersonic speeds, and has less cumbersome input requirements.
(c) A prediction method for inlet additive drag has been added (refs 4,5).
(d) The method for transonic body pressure drag (Mach < 1.2) has been replaced with a more general method, applicable to any nose shape (refs. 1,6).
(e) A prediction method for body protuberances has been added.
(f) The method for fin lateral center of pressure has been replaced with a more general method (ref. 7,8).
(g) A method for very low aspect ratio fins has been added. It is used at Mach numbers greater than 2.5 (ref. 9).
(h) A prediction method for high aspect ratio fins has been added (ref. 10).
(i) The fin axial force calculations have been revised.
(j) The partial output and trim output have been expanded.
(k) The airfoil section module calculations have been expanded.
(l) Coding errors have been corrected.

REFERENCES

1. Jenn, A.A., Bausch, K.D., Drew, B.K., Moore, M.E., and Struckel, M.K., "Missile Stability and Control Methods Development," Air Force Contract F33615-87-C-3604 Final Report, January 1990. (available from WL/FIGC)

2. Jenn, A.A., "Preliminary Design Estimates of Supersonic Plume-Boattail Interaction," AIAA Paper 90-0618, January 1990.

3. Moore, M.E., and Jenn, A.A., "Preliminary Design of Missile Inlets," AIAA paper 90-3091-CP, August 1990.

4. Lesieutre, D.J., Canning, T.N., Dillenius, M.F.E., Torres, T.O., and Mendenhall, M.R., "Missile Stability and Control Methods Development", NEAR TR 396, Vol. I, March 1990.

5. Perkins, S.C. and Dillenius, M.F.E., "Estimation of Additive Forces and Moments for Supersonic Inlets," AIAA paper 91-0712, January 1991.

6. Drew, B., and Jenn, A., "Pressure Drag Calculation on Axisymmetric Bodies of Arbitrary Moldline," AIAA paper 90-0280, January 1990.

7. Perkins, S.C., and Dillenius, M.F.E., "Missile Stability and Control Methods Development," NEAR TR 396, Vol. II, August 1989.

8. Lesieutre,D.J., and Dillenius, M.F.E., "Chordwise and Spanwise Centers of Pressure of Missile Fins," AIAA paper 91-0708, January 1991.

9. Lucero, E.F., "Empirical Curves for Predicting Supersonic Aerodynamics of Very Low Aspect Ratio Lifting Surfaces," AIAA paper 84-0575.

10. Hoak, D.E., et al, "USAF Stability and Control Datcom," AFWAL TR-83-3048, October 1960 (revised 1978).

Table of Contents

		Page
1.0	INTRODUCTION	1
2.0	PROGRAM CAPABILITIES	3
2.1	Addressable Configurations	3
2.1.1	Axisymmetric or Elliptical Bodies	3
2.1.2	Panels	4
2.1.2.1	Airfoil Section	4
2.1.2.2	Planform	4
2.1.3	Airbreathing Inlets	4
2.2	Types of Data Computed	4
2.2.1	Aerodynamics	5
2.2.2	Geometry	6
2.2.3	Other	6
2.3	Operational Considerations	6
3.0	INPUT DEFINITION	7
3.1	Namelist Inputs	8
3.1.1	NAMELIST FLTCON	11
3.1.2	NAMELIST REFQ	12
3.1.3	NAMELIST AXIBOD	12
3.1.4	NAMELIST ELLBOD	15
3.1.5	NAMELIST PROTUB	15
3.1.6	NAMELIST FINSETn	16
3.1.7	NAMELIST DEFLCT	18
3.1.8	NAMELIST TRIM	19
3.1.9	NAMELIST INLET	19
3.1.10	NAMELIST EXPR	20
3.2	Control Card Inputs	22
3.2.1	Control Card - General Remarks	22
3.2.2	Control Card Definition	23
3.3	Typical Case Set-up	30
3.3.1	Configuration Incrementing Case Set-up	30
3.4	Special Usage of Input Parameters	30
3.4.1	Locating Panels on Varying Body Radii Segments	30
4.0	OUTPUT DESCRIPTION	63
4.1	Nominal Output	63
4.1.1	Input Error Checking	64
4.1.2	Listing of Case Input Data	65
4.1.3	Case Total Configuration Aerodynamic Output Summary	66
4.2	Partial Output	67

Table of Contents (Continued)

	Page
4.2.1 Geometric Partial Output	67
4.2.2 Aerodynamic Partial Output	68
4.2.3 Pressure Distribution Data	71
4.3 Dynamic Derivatives	72
4.4 External Data Files	72
4.5 Extrapolation Messages and Array Dumps	73
A. EXAMPLE PROBLEMS	109
A.1 Example Problem 1	110
A.2 Example Problem 2	113
B. PLOT FILE FORMAT	119

List of Illustrations

Figure	Title	Page
1	Flight Conditions Inputs	35
2	Reference Quantity Inputs	36
3a	Axisymmetric Body Geometry Inputs - Option 1	37
3b	Axisymmetric Body Geometry Inputs - Option 2	38
4	Body Geometry Inputs	39
5	Base-Jet Plume Interaction Parameters	40
6a	Elliptical Body Geometry Inputs - Option 1	41
6b	Elliptical Body Geometry Inputs - Option 2	42
7	Protuberance Inputs	43
8	Protuberance Shapes Available	44
9	Protuberance Example Input File	45
10a	Fin Geometry Inputs - Nominal	46
10b	Fin Geometry Inputs - Optional	47
10c	Fin Geometry Inputs - User Airfoils	48
11	Selecting Panel Break Points	49
12	Fin Numbering and Orientation	50
13	Roll Attitude vs. Fin Orientation	51
14	Panel Deflection Inputs	52
15	Trim Inputs	53
16	Inlet Geometry Inputs	54
17a	Top-Mounted 2-D Inlet/Diverter Geometry	55
17b	Side-Mounted 2-D Inlet/Diverter Geometry	56
17c	Axisymmetric Inlet/Diverter Geometry	57
18	Experimental Data Inputs	58
19	Typical "Stacked" Case Set-up	61
20	"Configuration Incrementing" Case Set-up	62
21	Input Error Checking Output	75
22	Case Input Listing	76
23	Example of Default Substitutions for Incomplete Case Inputs	77
24	Total Configuration Aerodynamic Output Summary	78
25	Trimmed Output Summary	79
26	Body Geometry Output	80
27	Airfoil Geometry Output	81
28	Fin Geometry Output	82
29	Inlet Geometry Output	83
30	Base-Jet Plume Interaction Output - Page 1	84
31	Base-Jet Plume Interaction Output - Page 2	85
32	Protuberance Output	86
33	Body Alone Aerodynamic Partial Output	87
34	Fin Normal Force Partial Output	88
35	Fin Axial Force Partial Output	89

List of Illustrations (Continued)

Figure	Title	Page
36	Fin Pitching Moment Partial Output	90
37	Airfoil Section Aerodynamic Partial Output	91
38	Inlet Aerodynamic Partial Output	92
39	Fin Set in Presence of the Body Partial Output	93
40	Body Plus Fin Set Partial Output	94
41	Body Plus Two Fin Sets Partial Output	95
42	Carryover Interference Factors Partial Output	96
43	Body Alone Static Aerodynamic Output	97
44	Fin Alone Static Aerodynamic Output	98
45	Body Plus Fin Set Static Aerodynamic Output	99
46	Panel Bending Moment Partial Output	100
47	Panel Hinge Moment Partial Output	101
48	Untrimmed Partial Output	102
49	Body Pressure Distribution from SOSE, AOA=0°	103
50	Body Pressure Distribution at Angle of Attack	104
51	Fin Pressure Distribution Output	105
52	Dynamic Derivative Output	106
53	Extrapolation Message Output	107
54	Internal Array Dump Output	108
A-1	Example Problem 1 Configuration	111
A-2	Example Problem 1 Input	112
A-3	Example Problem 2 Configuration	114
A-4	Example Problem 2 Tail/Inlet Details	115
A-5	Example Problem 2 Input	116

List of Tables

Table	Title	Page
1	Body Addressable Configurations	31
2	Subsonic/Transonic Method Limitations	32
3	Namelist Alphanumeric Constants	33
4	Equivalent Sand Roughness	34
5	Common Block DUMP and WRITE Names	59
6	Airfoil Designation Using the NACA Control Card	60

1.0 INTRODUCTION

In missile preliminary design it is necessary to quickly and economically estimate the aerodynamics of a wide variety of missile configuration designs. Since the ultimate shape and aerodynamic performance are so dependent upon the subsystems utilized, such as payload size, propulsion system selection and launch mechanism, the designer must be capable of predicting a wide variety of configurations accurately. The fundamental purpose of Missile Datcom is to provide an aerodynamic design tool which has the predictive accuracy suitable for preliminary design, and the capability for the user to easily substitute methods to fit specific applications.

2.0 PROGRAM CAPABILITIES

The computer code is capable of addressing a wide variety of conventional missile designs. For the purposes of this document, a conventional missile is one which is comprised of the following:

- An axisymmetric or elliptically-shaped body
- One to four fin sets located along the body between the nose and base. Each fin set can be comprised of one to eight identical panels attached around the body at a common longitudinal position
- An airbreathing propulsion system.

To minimize the quantity of input data required, commonly used values for many inputs are assumed as defaults. However, all program defaults can be overridden by the user in order to more accurately model the configuration of interest.

The following paragraphs detail the configurations that can be analyzed. Later paragraphs describe the range of aerodynamic coefficients that can be predicted. Finally, the program constraints are discussed.

2.1 Addressable Configurations

The following configurations can be analyzed:

- Circular or elliptically-shaped cross section bodies, with or without airbreathing inlets
- Fin alone (1 to 8 panels attached at the root)
- Body and up to 4 fin sets (1 to 8 panels in each fin set)
- The body and fin set configurations with deflected fins

Certain restrictions exist due to method limitations and are summarized in the following paragraphs.

2.1.1 Axisymmetric or Elliptical Bodies - Methodology is incorporated that permits analysis of the configuration components summarized in Table 1. Due to the types of methods selected restrictions also apply to the manner in which these components are joined to form a complete configuration:

- Subsonic/transonic speeds - The aerodynamic methods assume that the body is, as a minimum, composed of a nose-cylinder combination. The afterbody (boattail or flare) is optional, but if used, it must be attached to a cylindrical center body whose length is at least four body diameters; this restriction minimizes nose flow field coupling over the afterbody. If an afterbody is specified it must not be cylindrical, e.g., the base diameter must be different than the centerbody diameter. Table 2 summarizes the other restrictions on the configurations.

- Supersonic speeds - The aerodynamic methods used are not restricted to nose-cylinder combinations. Any arbitrary radii distribution can be defined since theoretical techniques are employed at Mach numbers above 1.2. Care should be taken to avoid introducing unexpected corners into the contour. If the contour has any concaved regions the marching may fail due to shock impingement on the body as it starts to curve out.

2.1.2 Panels - The program will accept inputs to describe most airfoil sections or planforms. Certain assumptions and limitations are made and summarized in the following paragraphs.

2.1.2.1 Airfoil Section - The program will accept virtually any symmetrical airfoil section or NASA subsonic cambered section. The airfoil section can be defined using a NACA designation or by supplying the coordinates of the section. Circular arc, hexagonal, or diamond shaped sections can also be specified. A symmetric hexagonal cross-section is the default; its shape is computed using the planform inputs. Hence, explicit definition of the airfoil section is optional. Although cambered airfoil sections can be input, their use in the code is currently limited to subsonic applications.

2.1.2.2 Planform - Each set of fins may be comprised of up to eight separate panels. It is assumed that each panel is geometrically identical. Although planforms may be described by up to 10 separate pieces or sections, an equivalent straight-tapered panel is computed and used at all speeds. There is no capability to specify a panel with outboard dihedral.

2.1.3 Airbreathing Inlets - Both axisymmetric and two-dimensional airbreathing inlet/diverter combinations can be defined. Up to 20 identical inlets can be positioned around the body at arbitrary angles. Vehicles with inlets can be analyzed at all speeds.

2.2 Types of Data Computed

2.2.1 Aerodynamics - The program computes the following aerodynamic parameters as a function of angle of attack for each configuration:

C_N	Normal Force Coefficient
C_L	Lift Coefficient
C_m	Pitching Moment Coefficient
X_{cp}	Center of Pressure in calibers from the moment reference center
C_A	Axial Force Coefficient
C_D	Drag Coefficient
C_Y	Side Force Coefficient
C_n	Yawing Moment Coefficient
C_l	Rolling Moment Coefficient
$C_{N\alpha}$	Normal force coefficient derivative with angle of attack
$C_{m\alpha}$	Pitching moment coefficient derivative with angle of attack
$C_{Y\beta}$	Side force coefficient derivative with sideslip angle
$C_{n\beta}$	Yawing moment coefficient derivative with sideslip angle
$C_{l\beta}$	Rolling moment coefficient derivative with sideslip angle

The derivative output can be in degrees or radians. Partial output results, which detail the components used in the calculations, are also optionally available.

It should be noted that the drag force (and drag coefficient) is different between the wind and stability axes systems if the missile body is at a sideslip angle (β) to the wind. However, wind axis drag and stability axis drag are the same at zero sideslip. In Missile Datcom, drag force methods are assumed to be in the stability axes system and axial force methods are assumed to be in the body axes system unless otherwise noted.

The program has the capability to perform a static trim of the configuration, using any fin set for control with fixed incidence on the other sets. The two types of aerodynamic output available from the trim option are as follows:

- Untrimmed data - Each of the aerodynamic force and moment coefficients are printed in a matrix, which is a function of angle of attack and panel deflection angle. This output is optional.

- Trimmed data - The trimmed aerodynamic coefficients, and trim deflection angle, are output as a function of angle of attack.

2.2.2 Geometry - All components of the configuration have their physical properties calculated and output for reference if requested. All data is supplied in the user selected system of units.

2.2.3 Other - The reference area and reference length are user defined. The user may optionally select to print the calculated body or fin pressure coefficient distributions at supersonic speeds. Outputs of the partial aerodynamic results and a summary of method extrapolations are also optionally available.

2.3 Operational Considerations

The code has been written to conform to the coding standards for the American National Standards Institute (ANSI) Standard FORTRAN X3.9-1978, often referred to as FORTRAN V or FORTRAN 77.

There are only four exceptions to the ANSI standards used in the computer code:

- Transfer on end-of-file - The FORTRAN IV statement IF(EOF(UNIT).NE.0) is used in the standard CDC compatible code. The FORTRAN V statement END=label in the FORTRAN READ statements is incorporated in the code, but is inactive in the CDC code.

- NAMELIST - The use of namelist for input and output (I/O) is used. Although this appears to be a violation of FORTRAN IV, it is really not since a namelist emulator has been written for the Missile Datcom code using FORTRAN IV.

- Mathematical functions - A few mathematical functions are not considered "standard," such as the trigonometric tangent. Standard FORTRAN equivalents for these functions are available on request.

- PROGRAM card - The code was developed on the Control Data Corporation CYBER computers. This system requires that the first card of the main routine be a PROGRAM statement. An IBM or VAX compatible version of the code is also maintained which has a different format for the program card.

3.0 INPUT DEFINITION

Inputs to the program are grouped by "case". A "case" consists of a set of input cards which define the flight conditions and geometry to be run. Provisions are made to allow multiple cases to be run. The successive cases can either incorporate the data of the previous case (using the input card SAVE) or be a completely new configuration design. The SAVE feature, for example, permits the user to define a body and wing (or canard) configuration in the first case and vary the tail design for subsequent cases.

The scheme used to input data to the computer program is a mixture of namelist and control cards. This combination permits the following:

- Inputs are column independent and can be input in any order.

- All numeric inputs are related to mnemonic (variable) names.

- Program input "flags" are greatly reduced. Required "flags" are identified by a unique alphabetic name which corresponds to the option selected.

The program includes an error checking routine which scans all inputs and identifies all errors. This process is a single-pass error checking routine; all errors are identified in a single "run". In addition, the program checks for necessary valid inputs, such as a non-zero Reynolds number. In some cases, the code will take corrective action. The type of corrective action taken is summarized later in this section.

Flexibility has been maintained for all user inputs and outputs. The following summarize the program generality available:

- The units system can be feet, inches, meters or centimeters. The default is feet.

- Derivatives can be expressed in degree or radian measure. Degree measure is the default.

- The body geometry can be defined either by shape type or by surface coordinates.

- The airfoil can be user defined, NACA, or supersonic shaped sections. The NACA sections are defined using the NACA designation. A hexagonally shaped supersonic section is the default.

- The configuration can be run at a fixed sideslip angle and varying body angle of attack, or a fixed aerodynamic roll angle and varying total angle of attack.

- The flight conditions can be user defined, or set using a Standard Atmosphere model. The capability to define wind tunnel test conditions as the flight conditions is also available. The default flight condition is zero altitude.

3.1 Namelist Inputs

The required program inputs use FORTRAN namelists. Missile Datcom is similar to other codes which use the namelist input technique, but differ as follows:

- Namelist inputs are column independent, and can begin in any column including the first. If a namelist is continued to a second card, the continued card must leave column 1 blank. Also, the card before the continued card must end with a comma. The last usable column is number 79 if column 1 is used, and column 80 if column 1 is blank.

- The same namelist can be input multiple times for the same input case. The total number of namelists read, including repeat occurrences of the same namelist name, must not exceed 300.

  The three namelist inputs

  ```
  $REFQ     SREF=1.,$
  $REFQ     LREF=2.,$
  $REFQ     ROUGH=0.001,$
  ```

  are equivalent to

  ```
  $REFQ     SREF=1.,LREF=2.,ROUGH=0.001,$
  ```

- The last occurrence of a namelist variable in a case is the value used for the calculations.

  The three namelist inputs

  ```
  $REFQ     SREF=1.,$
  $FLTCON   NMACH=2.,MACH=1.0,2.0,$
  $REFQ     SREF=2.,$
  ```

are equivalent to

```
$REFQ      SREF=2.,$
$FLTCON    NMACH=2., MACH=1.0, 2.0,$
```

- The namelists can be input in any order.
- Only those namelists required to execute the case need be entered.
- Certain hollerith constants are permitted. They are summarized in Table 3. Note that any variable can be initialized by using the constant UNUSED; for example, LREF=UNUSED sets the reference length to its initialized value.

All Missile Datcom namelist inputs are either real numbers or logical constants. Integer constants will produce a nonfatal error message from the error checking routine and should be avoided.

The namelist names have been selected to be mnemonically related to their physical meaning. The ten namelists available are as follows:

Namelist	Inputs
$FLTCON	Flight Conditions (Angles of attack, Mach numbers, etc.)
$REFQ	Reference quantities (Reference area, length, etc.)
$AXIBOD	Axisymmetric body definition
$ELLBOD	Elliptical body definition
$PROTUB	Protuberance information and geometry
$FINSETn	Fin descriptions by fin set (n is the fin set number; 1, 2, 3 or 4)
$DEFLCT	Panel incidence (deflection) values
$TRIM	Trimming information
$INLET	Inlet geometry
$EXPR	Experimental data

Each component of the configuration requires a separate namelist input. Hence, an input case of a body-wing-tail configuration requires at least one of each of the following namelist inputs, since not all variables have default values assigned:

$FLTCON	to define the flight conditions

$AXIBOD or $ELLBOD	to define the body
$FINSET1	to define the most forward fin set
$FINSET2	to define the first following fin set
$FINSET3	to define the second following fin set
$FINSET4	to define the third following fin set

The following namelists are optional since defaults exist for all inputs:

$REFQ	to define the reference quantities
$PROTUB	to define protuberance option inputs
$DEFLCT	to define the panel incidence (deflection angles)
$TRIM	to define a trim case
$INLET	to define inlet geometry
$EXPR	to define experimental input data

Defaults for all namelists should be checked to verify the configuration being modeled does not include an unexpected characteristic introduced by a default.

The following sections describe each of the namelist inputs. Each section is accompanied by a figure which summarizes the input variables, their definitions, and units. Since the system of units can be optionally selected, the column "Units" specifies the generic system of units as follows:

L	Units of length; feet, inches, centimeters or meters
F	Units of force; pounds or Newtons
deg	Units of degrees; if angular, in angular degrees; if temperature, either degrees Rankine or degrees Kelvin
sec	Units of time in seconds

Exponents are added to modify the above. For example, L^2 means units of length squared, or area. Combinations of the above are also used to specify other units. For example, F/L^2 means force divided by area, which is a pressure.

Since it is difficult to discern the difference between the number zero "0" and the alphabetic letter "O", it should be noted that none of the namelist or namelist variable names contain the number zero in them. In general, the number zero and the letter "O" are not interchangeable unless so stated.

The program ascertains the configuration being modeled by the presence of each component namelist, even if no data is entered. The following rules for namelist input apply:

- Do not include a namelist unless it is required. Once read, the presence of a namelist (and, hence, a configuration component) can only be removed using the DELETE control card in a subsequent case. Simply setting all variables to their initialized values will not remove the configuration component.

- Do not include a variable within a namelist unless it is required. Program actions are often determined from the number and types of input provided.

- Do not over-specify the geometry. User inputs will take precedence over program calculations. Inputs that define a shape that is physically impossible will be used as specified. The program does not "fix-up" inconsistent or contradictory inputs.

3.1.1 NAMELIST FLTCON - Flight Conditions

This namelist defines the flight conditions to be run for the case. The program is limited to no more than 20 angles of attack and 20 Mach numbers per case at a fixed sideslip angle, aerodynamic roll angle, altitude, and panel deflection angle. Therefore, a "case" is defined as a fixed geometry with variable Mach number and angles of attack.

The inputs are given in Figure 1. There are two ways in which the aerodynamic pitch and yaw angles can be defined:

- Input ALPHA and BETA. If BETA is input and PHI is not, it is assumed that the body axis angles of attack (α) and sideslip angles (β) are defined.

- Input ALPHA and PHI. If PHI is input and non-zero, it is assumed that ALPHA is the total angle of attack (α) and PHI is the aerodynamic roll angle (ϕ).

- Input ALPHA, BETA and PHI. The value for BETA is ignored if PHI is non-zero.

As a minimum the following variables must be defined:

NALPHA	number of angles of attack to run (NALPHA $\geq$ 2)
ALPHA	angle of attack schedule (matching NALPHA)

NMACH	number of Mach numbers or speeds (NMACH ≥ 1)
MACH or VINF	Mach number or speed schedule (matching NMACH)

The REN, TINF and PINF data must correspond to the MACH or VINF inputs. The ALPHA and MACH dependent data can be input in any order; the code will sort the data into ascending order.

Reynolds number is always required. Three types of inputs are permitted to satisfy the Reynolds number requirement:

- Specify Reynolds number per unit length using REN
- Specify the altitude using ALT, and the speed using MACH or VINF (Reynolds number is computed using the Standard Atmosphere model)
- Specify pressure and temperature using PINF and TINF, and the speed using MACH or VINF (typical of data available from a wind tunnel test)

User supplied data will take precedence over program calculations. Hence, the user can override any default or Standard Atmosphere calculation. The default condition is sea-level altitude (ALT=0.) if the wrong combination of inputs are provided and the Reynolds number cannot be calculated.

3.1.2 NAMELIST REFQ - Reference Quantities

Inputs for this namelist are optional and are defined in Figure 2. A vehicle scale factor (SCALE) permits the user to input a geometry that is scaled to the size desired. This scale factor is used as a multiplier to the user defined geometry inputs; it is not applied to the user input reference quantities (SREF, LREF, LATREF). If no reference quantities are input, they are computed based upon the scaled geometry. XCG is input relative to the origin (X=0) and is scaled using SCALE.

In lieu of specifying the surface roughness height ROUGH, the surface Roughness Height Rating (RHR) can be specified. The RHR represents the arithmetic average roughness height variation in millionths of an inch. Typical values of ROUGH and RHR are given in Table 4.

3.1.3 NAMELIST AXIBOD - Axisymmetric Body Geometry

An axisymmetric body is defined using this namelist. The namelist input variables are given in Figures 3a and 3b and a sketch of the geometric inputs are given in Figure 4. The body can be specified in one of two ways:

OPTION 1: The geometry is divided into nose, centerbody, and aft body sections. The shape, overall length, and base diameter for each section are specified. Note that not all three body sections need to exist on a configuration; for example, a nose-cylinder configuration does not require definition of an aft body.

OPTION 2: The longitudinal stations and corresponding body radii are defined, from nose to tail. This option should only be selected if the Mach number is greater than 1.2.

The program uses the input value for NX to determine which option is being used. If NX is not input then Option 1 inputs are assumed. If both shapes and body coordinates (Options 1 and 2) are used, the body coordinate information will take precedence. NX can be set to its initialized value (to simulate the variable as not input) by specifying "NX=UNUSED".

It is highly recommended that Option 1 be used when possible. The program automatically calculates the body contour based upon the segment shapes using geometry generators. Hence, more accurate calculations are possible. Even when Option 2 is used, appropriate Option 1 inputs should be included. This identifies where the code should insert break points in the contour. If these parameters are not input, they are selected as follows:

LNOSE	Length of the body segment to where the radius first reaches a maximum
DNOSE	The diameter at the first radius maximum
LCENTR	Length of the body segment where the radius is constant
DCENTR	Diameter of the constant radius segment
LAFT	The remaining body length
DAFT	Diameter at the base
DEXIT	Not defined (implies that base drag is not to be included in the axial force calculations)

If DEXIT is not input, or set to UNUSED, the base drag computed for the body geometry will not be included in the final computed axial force calculations. To include a "full" base drag increment, a zero exit diameter must be specified (DEXIT=0.).

If body coordinates are input using the variables NX, X, R, and DISCON, and the nose is spherically blunted, the geometry must be additionally defined using the following:

- BNOSE must be specified (even if zero)
- TRUNC must be set to .FALSE.

- The first five (5) points in the X and R arrays must lie on the spherical nose cap [i.e., X(1), X(2), X(3), X(4), X(5), R(1), R(2), R(3), R(4), and R(5) are spherical cap coordinates]

The following summarizes the input generality available:

- X(1) does not have to be 0.0; an arbitrary origin can be selected.

- Five shapes can be specified by name:

  CONICAL (CONE) - cone or cone frustrum (default for boattails and flares)
  OGIVE - tangent ogive (default for noses)
  POWER - power law*
  HAACK - L-V Haack (length-volume constrained)*
  KARMAN - von Karman (L-D Haack; length-diameter constrained)*

- If DAFT<DCENTR the afterbody is a boattail.**

- If DAFT>DCENTR the afterbody is a flare.**

- If LAFT is not input, aft body (boattail or flare) does not exist.

* applies to noses only
** DAFT must not be equal to DCENTR

The inputs for base-jet plume interaction effects are defined using Option 1. Incremental forces and moments due to jet induced boattail separation and separation locations on aft fins are calculated if these inputs are used.

- This option should only be run for supersonic cases (i.e. $M_\infty \geq 1.2$)

- The calculations will be done for three types of aft bodies conical boattail, ogival boattail, or cylindrical (i.e. no boattail). Error messages will be printed to the output file and the calculations skipped if any other aft body is defined.

- If BASE=.FALSE. or is not input the calculations will be skipped.

- DEXIT must not equal zero if this option is used.

- The jet Mach number (JMACH), jet to freestream static pressure ratio (PRAT), and jet to freestream stagnation temperature ratio (TRAT) must be specified for each freestream Mach number or velocity input in the namelist FLTCON. For subsonic or transonic freestream Mach numbers or velocities, dummy values must be input for JMACH, PRAT, and TRAT. The user must be careful to match these inputs with the proper freestream conditions.

- If a portion of the fins in a fin set are located on the boattail or base, the boattail separation locations will be calculated and output at each fin roll angle. However, if the fins do not extend to the boattail the separation locations will be skipped.

- Results may be inaccurate if excessive extrapolation is required. If extrapolation occurs, a warning message will be printed to the output file. To avoid extrapolation and minimize inaccuracy, the input parameters should be kept within the ranges shown in Figure 5.

3.1.4 NAMELIST ELLBOD - Elliptical Body Geometry

Elliptically-shaped cross section bodies are defined using this namelist. The inputs are similar to those for the axisymmetric body geometry (AXIBOD), and are shown in Figures 6a and 6b. The types of shapes available, and the limitations, are the same as those given for axisymmetric bodies. However, the base-jet plume interaction input options in namelist AXIBOD are not available in namelist ELLBOD. Please read Section 3.1.3 for limitations.

Note that the body cross section ellipticity can vary along the body longitudinal axis. Sections which are taller-than-wide and wider-than-tall can be mixed to produce "shaped" designs. The shape of the sections is controlled by the variables ENOSE, ECENTR, and EAFT or ELLIP, H and W.

3.1.5 NAMELIST PROTUB - Protuberance Geometry

Missile protuberances can be input using this namelist. Axial force coefficient is calculated for the protuberances and added to the body axial force coefficient. Figure 7 shows the inputs required. Figure 8 shows the different protuberance shapes available. The following defines the inputs required for protuberance calculations:

- NPROT is the number of protuberance sets. A protuberance set is made up of protuberances at the same axial location

with the same size and shape. Therefore, it is only necessary to describe the geometry of one individual protuberance per set. The maximum number of protuberance sets is 20.

- NLOC is the number of protuberances in each protuberance set. NLOC accounts for the number of identical protuberances located around the missile body at a given axial location.

- The following equation helps to clarify the relationship between NLOC and NPROT:

  NLOC(1)+NLOC(2)+NLOC(3)+ . . . +NLOC(NPROT) = (Total number of protuberances on the missile)

- The axial location of a protuberance (XPROT) should be input at the protuberance geometric centroid. An approximation of the centroid will be adequate for the analysis. The location is used to calculate the average boundary layer thickness over the protuberance length.

- VCYL, HCYL, BLOCK, and FAIRING type protuberances have 1 member. LUG types have 4 members and SHOE types have 3 members. (Refer to Figure 8)

- All inputs for LPROT, WPROT, HPROT, and OPROT are in sequential order based upon the members specified with the protuberance type (PTYPE) input.

- The FAIRING type protuberance should always have a zero offset. The code will assume a zero offset even if a non-zero offset is input.

More complex protuberance shapes can be analyzed by a component build-up method. Each member is treated as a separate protuberance. Combinations of vertical cylinders, horizontal cylinders, and flat plates or blocks can be input at specified offsets from the missile body. If a FAIRING type protuberance is used in a component build-up, the offset should be zero. The user must manually add axial force of the individual members of the component build-up if the total protuberance axial force is desired.

Figure 9 shows an example input file for a missile with several protuberances.

3.1.6 NAMELIST FINSETn - Define Fin Set n

Figure 10a describes the variables needed to be input for fin set planform geometry descriptions. Optional fin cross-section inputs are described in Figure 10b. Special user specified fin cross-sections can be input using the variables in Figure 10c. The user may specify up to four non-overlapping fin sets. The variable "n" in the namelist specifies the fin set number. Fin sets must be numbered sequentially from the front to the back of the missile beginning with fin set one. An input error will occur if "n" is zero or omitted. The code allows for between 1 and 8 geometrically identical panels to be input per fin set. The panels may be arbitrarily rolled about the body and can be given dihedral.

Four types of airfoil sections are permitted--hexagonal (HEX), circular arc (ARC), NACA airfoils (NACA), and user defined (USER). Only one type of airfoil section can be specified per fin set, and this type is used for all chord wise cross sections from root to tip. Diamond-shaped sections are considered a special case of the HEX type; hence, hexagonal and diamond sections can coexist on the same panel. The airfoil proportions can be varied from span station to span station.

The user selects "break points" on the panel (Figure 11). A "break point" specifies a change in leading or trailing edge sweep angle. Also a break point may specify a change in airfoil section, but the section must be of the same type (i.e., a change in section type cannot go from a NACA to an ARC) only the proportions can change. The location of each "break point" is defined by specifying its semi-span station (SSPAN) from the vehicle centerline and distance from the first body station to the chord leading edge (XLE). The "break point" chord leading edge array (XLE) can be defined by simply specifying the root chord leading edge [XLE(1)] and the sweep angles of each successive panel segment if the semi-span stations are input. Note that only those variables that uniquely define the fin need to be entered. Redundant inputs can lead to numerical inconsistencies and subsequent computational errors.

The panel sweep angle (SWEEP) can be specified at any span station for each segment of the panels. If STA=0., the sweep angle input is measured at the segment leading edge; if STA=1., the sweep angle input is measured at the segment trailing edge. Note that some aerodynamic methods are very sensitive to panel sweep angle. For small span fins, small errors in the planform inputs can create large sweep angle calculation errors. It is recommended that exact sweep angles be specified wherever possible; for example, if the panel trailing edge is unswept, specifying SWEEP=0. and STA=1. will minimize calculation error. Then the leading edge sweep will be computed by the code internally using the SSPAN and CHORD inputs.

Since all panels are assumed to be planar (i.e., no tip dihedral), all inputs must be "true view". Once the planform of a single panel is defined,

all fins of the set are assumed to be identical. The number of panels present is defined using the variable NPANEL. Each panel may be rolled to an arbitrary position around the body using the variable PHIF. PHIF is measured clockwise from top vertical center (looking forward from behind the missile) as shown in Figure 12. Each panel may also contain a constant dihedral. A panel has zero dihedral when it is aligned along a radial ray from the centerline (see Figure 12). The variable used to specify dihedral is GAM. GAM is positive if the panel tip chord is rotated clockwise.

Different aerodynamics will be computed depending upon whether the FLTCON namelist variable PHI, or the FINSETn namelist variable PHIF, is used to roll the geometry. Figure 13 depicts the usage of the roll options. The variable "PHI" means that the body axes system is to be rolled with the missile body, whereas PHIF keeps the aerodynamics in a non-rolled body axis, but rather locates the fin positions around the body. PHIF must be input for each panel, while PHI rolls the whole configuration.

It is the user's responsibility to assure that the fins are (1) on the body surface, and (2) do not lie internal to the body mold line. The program does not check for these peculiarities. If SSPAN(1)=0 is input, the program will assume that the panel semi-span data relative to its root chord are supplied. The code will automatically interpolate the body geometry to place the panel on the body surface with the root chord parallel to the body centerline. See Section 3.4 for modeling fins on body segments of varying radii.

When defining more than one fin set, the fin sets must never have their planforms overlap one another. There must be sufficient space between the forward fin trailing edge and aft fin leading edge to avoid violating the assumptions made by the aerodynamic computations. It is assumed by the aerodynamic model that the vortices are fully rolled up when they pass the control points of the next downstream set of fins. In reality the vortex sheet does not fully roll up until it is at least four semispans downstream. If two fin sets are closer than this the results may be in error since the use of a vortex filament model may introduce too much vorticity. The closer the spacing the larger the error may be. No algorithm error will result from too close a fin set spacing.

Panels with cut-out portions can be modeled by using one of the ten available fin segments as a transition segment. This is accomplished by giving the segment a small span, such as 0.0001, and specifying the segment root and tip chords to transition into the cut-out portion of the fin.

3.1.7 NAMELIST DEFLCT - Panel Deflection Angles

This namelist permits the user to fix the incidence angle for each panel in each fin set. The variables are given in Figure 14. Note that the panel

numbering scheme is assumed to be that shown in Figure 12. The array element of each deflection array corresponds to the panel number.

The scheme for specifying deflection angles is unique, yet concise. The scheme used is based upon the body axis rolling moment:

> "In Missile Datcom a positive panel deflection is one which will produce a negative (counterclockwise when viewed from the rear) roll moment increment at zero angle of attack and sideslip."

3.1.8 NAMELIST TRIM - Trim Aerodynamics

This namelist instructs the program to statically trim the vehicle longitudinally (C_m=0). The inputs are given in Figure 15. Note that only one fin set can be used for trimming. The user only specifies the range of deflection angles desired using DELMIN and DELMAX; the code will try to trim the vehicle for each angle of attack specified using the allowable fin deflections. This option will not trim the vehicle at a specific angle of attack if the deflection required is outside the range set by the values of DELMIN and DELMAX.

The deflection sign convention used is that described in Section 3.1.7; hence, DELMIN and DELMAX are input as if deflecting the panel to the maximum will produce a negative rolling moment from the panels resulting normal force increment. DELMIN must always be less than DELMAX.

A logical variable, ASYM, has been included to permit reverse panel deflections. For example, deflecting all panels in one sense results in a rolling moment and no pitching moment. The ASYM flag will permit analysis of an elevator (or pitch deflection) effect, by deflecting panels on one side of the vehicle only, with opposite panels mirroring those deflections. Since a maximum of eight panels are allowed in a fin set, only four panels of the fin set can be deflected in the reverse direction using the ASYM flag. Both trimmed and untrimmed results are available for output.

3.1.9 NAMELIST INLET - Axisymmetric and 2-Dimensional Inlet Geometry

This namelist is used to model the inlet and diverter geometry. Axisymmetric, two-dimensional side mounted, and two-dimensional top mounted external compression inlets can be described. The inlets may be covered or uncovered and oriented in any position about the missile body. Inlet normal force, pitching moment, side force, yawing moment, and axial force are calculated. The methods are valid for subsonic, transonic, and supersonic speeds. Figure 16 shows the INLET namelist inputs, and Figures 17a, 17b, and 17c show the inlet/diverter geometry for each type of inlet.

- Inlet roll orientation uses the same convention as the fin panel roll orientation.

- Inlet height and width or inlet diameter is input at five axial locations described in Figures 17a, 17b, and 17c:
  1) leading edge or tip
  2) cowl lip leading edge
  3) midbody start
  4) boattail start
  5) boattail end

- If the inlet is covered (COVER=.TRUE.), no flow is allowed into the inlet. The inlet is plugged between stations 1 and 2, flush with the inlet face.

Inlet additive drag or spillage drag can be calculated for external compression inlets operating at off-design conditions ($M_\infty < M_{design}$) for Mach numbers greater than 1. Whenever flow spillage occurs, the mass flow ratio is less than one, and additive forces are generated on the deflected streamtube captured by the inlet. If the inlet operates on-design, the ramp shock lies on the inlet face and on the cowl lip. In these cases, the maximum mass flow ratio is one (zero spillage) and the minimum additive forces are zero.

- If the inlet is covered (COVER=.TRUE.), the additive drag calculations will be skipped.

- If ADD=.FALSE., or is not input the additive drag calculations will be skipped.

- Mass flow ratio (MFR) must be specified for each freestream Mach number or velocity given in namelist FLTCON. For Mach numbers less than 1, dummy values must be input for MFR. The user must be careful to match these inputs with the proper freestream conditions.

- The additive drag is calculated at zero angle of attack and assumed to remain constant for all angles of attack.

3.1.10 <u>NAMELIST EXPR</u> - Experimental Data Substitution

This namelist is used to substitute experimental data for the theoretical data generated by the program. The variables to be input are shown in Figure 18. Use of namelist EXPR does not stop the program from calculating theoretical data, but rather the experimental data is used in configuration

synthesis, and it is the experimental data that is used for the component aerodynamics for which it is input.

Experimental data may be substituted for any configuration component or partial configuration. Experimental data is input at a specific Mach number. when using namelist EXPR the case must be run at the Mach number for which you are substituting experimental data. However, the experimental data being input may have different reference quantities and a different center of gravity location than the case being run.

Experimental data input for a fin alone is input as panel data, not as total fin set data. The user should note that experimental data for fin alone $C_{m\alpha}$ is not used in the configuration synthesis process. Instead fin alone $C_{N\alpha}$ (the experimental value if input) is used to determine the fin contribution to $C_{m\alpha}$ during configuration synthesis. If body alone experimental data and body-fin experimental data are input for the same case the body data is ignored in configuration synthesis. If experimental $C_{m\alpha}$ data is input for a body + 1 fin set for a multi-fin set configuration, the calculated contributions to $C_{m\alpha}$ of the other fin sets are added to the experimental data.

Since the experimental namelist forms the basis for configuration incrementing, the lateral directional coefficients are included to allow for sideslip cases. These coefficients are input the same as the longitudinal coefficients. However, if the lateral directional coefficients are input, the lateral directional beta derivatives will not be computed our output.

The following rules apply to the use of namelist EXPR.

- It is assumed that the coefficients in EXPR are for the same sideslip and/or aerodynamic roll as the case being run.

- Separate namelist EXPR must be specified for each Mach number.

- Each namelist EXPR must end with a $END card.

- Separate namelist EXPR must be specified for each partial configuration for which experimental data is to be input, (i.e., body, body + 1 fin set, etc)

- Separate namelist EXPR must be specified for each reference quantity change.

  Example:
  The user has experimental data available for a body + 2 fin set configurations and is interested in the effects of adding a

booster containing a third fin set. he would then use namelist EXPR to input the experimental data. When the configuration is synthesized, it would use the experimental data for body + 2 fin sets and theoretical data for fin set three.

3.2 Control Card Inputs

Control cards are one line commands which select program options. Although they are not required inputs, they permit user control over program execution and the types of output desired. Control cards enable the following:

- Printing internal data array results for diagnostic purposes (DUMP)
- Outputting intermediate calculations (PART, BUILD, PRESSURES, PRINT AERO, PRINT EXTRAP, PRINT GEOM, PLOT, NAMELIST, WRITE, FORMAT)
- Selecting the system of units to be used (DIM, DERIV)
- Defining multiple cases, permitting the reuse of previously input namelist data or deleting namelists of a prior case (SAVE, DELETE, NEXT CASE)
- Adding case titles or comments to the input file and output pages (*, CASEID)
- Limits the calculations to longitudinal aerodynamics (NO LAT)

3.2.1 Control Card - General Remarks

A total of 42 different control cards are available. There is no limit to the number of control cards that can be present in a case. If two or more control cards contradict each other, the last control card input will take precedence. All control cards must be input as shown, including any blanks. Control cards can start in any column but they cannot be continued to a second card. Misspelled cards are ignored. Control cards can be located anywhere within a case.

Once input, the following control cards remain in effect for all subsequent cases:

DIM FT	DIM IN	DIM CM	DIM M	FORMAT
HYPER	INCREMENT	NOGO	NO LAT	PLOT

SOSE WRITE

The following control cards are effective only for the case in which they appear:

BUILD	CASEID	DAMP	DELETE
DUMP CASE	DUMP NAME	NAMELIST	PART
PRESSURES	PRINT AERO	PRINT EXTRAP	
PRINT GEOM	SAVE	SPIN	TRIM

These control cards can be changed from case to case:

DERIV DEG DERIV RAD NACA

The only control card that can be optionally saved, from case-to-case, is the NACA card.

3.2.2 Control Card Definition

Available control cards are summarized as follows:

BUILD

This control card instructs the program to print the results of a configuration build-up. All configurations which can be built from the components defined will be synthesized and output, including isolated data (e.g., body alone, fin alone, etc.). Component build-up data is not provided if the TRIM option is selected.

CASEID

A user supplied title to be printed on each output page is specified. Up to 72 characters can be specified (card columns 8 to 80).

DAMP

When DAMP control card is input longitudinal dynamic derivatives are computed and the results output for the configuration. Dynamic derivatives for configuration components or partial configurations may be output using the PART or BUILD control cards respectively.

DELETE name1,name2

This control card instructs the program to ignore a previous case namelist input that was retained using the SAVE control card. All previously saved namelists with the names specified will be purged from the input file.

Any new inputs of the same namelist will be retained. At least one name (name1) must be specified.

DIM IN, DIM FT, DIM CM, or DIM M

This control card sets the system of units for the user inputs and program outputs. The four options are inches (DIM IN), feet (DIM FT), centimeters (DIM CM), and meters (DIM M). The default system of units is feet. Once the system of units has been set, it remains set for all subsequent cases of the "run".

DERIV DEG or DERIV RAD

All output derivatives are set to either degree (DERIV DEG) or radian (DERIV RAD) measure. The default setting is degree. The derivative units can be changed more than once during the run by inputting multiple DERIV cards.

DUMP CASE

Internal data blocks, used in the computation of the case, are written on Tape 6. This control card automatically selects partial output (PART).

DUMP name1,name2

This permits the user to write selected internal data blocks or common blocks on Tape 6. At least one name (name1) must be specified. The arrays will be dumped in units of feet, pounds, degrees or degrees Rankine. Table 5 shows the common block dump names.

FORMAT (format)

This control card is used in conjunction with the WRITE control card. It specifies the format of the data to be printed to tape unit 3. The format is input starting with a left parenthesis, the format and a right parenthesis. This is exactly the same as a FORTRAN FORMAT statement. Because of the code structure, alphanumeric data must not be printed. For example:

FORMAT ((8(2X,F10.4))	is legal
FORMAT (2HX=,F10.4)	is illegal

The default format is 8F10.4, and will be used if the FORMAT control card is not present. Multiple formats can be used. The last FORMAT read will be used for all successive WRITE statements until another FORMAT is encountered. Hence, the FORMAT must precede the applicable WRITE.

HYPER

This control card causes the program to select the Newtonian flow method for bodies at any Mach number above 1.4. HYPER should normally be selected at Mach numbers greater than 6.

INCRMT

This card is used to set the configuration incrementing flag. Configuration incrementing uses the first case of a run to determine correction factors for the longitudinal and lateral aerodynamic coefficients. These correction factors are computed by comparing theoretical and experimental values for each coefficient for which data is input. The experimental values are input using namelist EXPR. During subsequent cases of the run, the correction factors are applied to coefficients for which experimental data was input in the first case. This provides the user with a method to evaluate changes in a configuration.

The INCRMT card must be input in the first case of a run. The first case must be run at the same Mach number as the experimental data which is input. Once the increment flag is set it cannot be deleted during that run.

The following restrictions apply:

- All cases of a run must have the same number of fin sets.
- All cases of a run must have the same sideslip or aerodynamic roll angle as the first case (BETA or PHI as specified in namelist FLTCON).
- The first case must be run at exactly the same angles of attack as the experimental data being input.
- All cases must be run within the same Mach regime (subsonic, transonic, or supersonic) as the experimental data.
- Experimental data can only be input in the first case and only for the complete configuration. No additional data can be substituted.
- To increment $C_{Y\beta}$ and $C_{N\alpha}$ experimental data must be input for C_Y and C_N.

Use of configuration incrementing may or may not increase the accuracy of the results. The following guidelines will produce better results when using configuration incrementing:

- The user may run different angles of attack in each case. However, no angle of attack should exceed the upper or lower limit of the angles of attack for which experimental data was input in the first case.

- Experimental data should be input at as many angles of attack as possible.

- The user should remember that the effect of a change in Mach number from case to case is not corrected by inputting experimental data at one Mach number as is required.

NACA

This card defines the NACA airfoil section designation (or supersonic airfoil definition). Note that if airfoil coordinates and the NACA card are specified for the same aerodynamic surface, the airfoil coordinate specification will be used. Therefore, if coordinates have been specified in a previous case and the SAVE option is in effect, the saved namelist must be deleted or the namelist variable SECTYP must be changed for the NACA card to be recognized for that aerodynamic surface. The airfoil designated with this card will be used for all segments and panels of the fin set.

The form of this control card and the required parameters are as follows:

Card Column(s)	Input(s)	Purpose
1 thru 4	NACA	The unique letters NACA designate that an airfoil is to be defined
5	Any delimiter	
6	1,2,3, or 4	Fin set number for which the airfoil designation applies
7	Any delimiter	
8	1,4,5,6,S	Type of NACA airfoil section; 1-series (1), 4-digit (4), 5-digit (5), 6-series (6), or supersonic (S)
9	Any delimiter	
10 thru 80	Designation	Input designation (see Table 6); columns are free-field (blanks are ignored)

Only fifteen (15) characters are accepted in the airfoil designation. The vocabulary consists of the following characters:

0 1 2 3 4 5 6 7 8 9 A , = . -

Any characters input that are not in the vocabulary list will be interpreted as the number zero (0). Table 6 details the restrictions on the NACA designation.

NAMELIST

This control card instructs the program to print all namelist data. This is useful when multiple inputs of the same variable or namelist are used.

NEXT CASE

This card indicates termination of the case input data and instructs the program to begin case execution. It is required for multiple case "runs". This card must be the last card input for the case.

NOGO

This control card permits the program to cycle through all of the input cases without computing configuration aerodynamics. It can be present anywhere in the input stream and only needs to appear once. This option is useful for performing error checking to insure all cases have been correctly set up.

NO LAT

This control card inhibits the calculation of the lateral-directional derivatives due to sideslip angle. Savings in computation time can be realized by using this option. This option is automatically selected when using TRIM.

PART

This control card permits printing of partial aerodynamic output, such as a summary of the normal force and axial force contributors. Partial output of the configuration synthesis methods is only provided if the TRIM option is not selected. Use of this card is equivalent to inputing all PRINT AERO and PRINT GEOM control cards (except *, -, +).

PLOT

A data file for use with a post-processing plotting program is provided when this control card is used. A formatted file is written to unit 3. Appendix B shows the format of this data file.

PRESSURES

This control card instructs the program to print the body and fin alone pressure coefficient distributions at supersonic speeds. Only pressure data to 15 degrees angle of attack for bodies and at zero angle of attack for fins are printed.

PRINT AERO name

This control card instructs the program to print the incremental aerodynamics for "name", which can be one of the following:

BODY	for body aerodynamics
FIN1	for FINSET1 aerodynamics
FIN2	for FINSET2 aerodynamics
FIN3	for FINSET3 aerodynamics
FIN4	for FINSET4 aerodynamics
SYNTHS	for configuration synthesis aerodynamics
TRIM	for trim/untrimmed aerodynamics
BEND	for panel bending moments
HINGE	for panel hinge moments
INLET	for inlet aerodynamics

All options are automatically selected when the control card PART is used. Details of the output obtained with these options are presented in Section 4.2.

PRINT EXTRAP

This control card enables the printing of method extrapolation messages produced during execution of the case. Extrapolation messages are not normally provided.

PRINT GEOM name

This control card instructs the program to print the geometric characteristics of the configuration component "name", which can be one of the following:

BODY	for body geometry
FIN1	for FINSET1 geometry
FIN2	for FINSET2 geometry
FIN3	for FINSET3 geometry
FIN4	for FINSET4 geometry
INLET	for inlet geometry

All options are automatically selected when the control card PART is used.

SAVE

The SAVE card saves namelist inputs from one case to the following case but not for the entire run. This permits the user to build-up or change a complex configuration, case-to-case, by adding new namelist cards without having to re-input namelist cards of the previous case. When changing a namelist that has been saved, the namelist must first be deleted using the delete control card.

The only control card that can be optionally saved, case-to-case, is the NACA card.

SOSE

The presence of this control card selects the Second-Order Shock Expansion Method for axisymmetric bodies at supersonic speeds. SOSE should be selected if any Mach number is higher than 2.0.

SPIN

When the SPIN control card is input, spin and magnus derivatives are computed for body alone. If the configuration being run is a body + fin sets, the spin derivatives are still computed for body alone. A PART or BUILD card must be input for body alone derivatives to be printed out.

TRIM

This control card causes the program to perform a trim calculation. Component buildup data cannot be dumped if TRIM is selected. The use of this control card is the same as if the namelist TRIM was included except that the defaults for namelist TRIM are used.

WRITE name, start,end

This control card causes the common block "name" to be printed to tape unit 3 using the most recent FORMAT control card. Locations from "start" to "end" are dumped (see Table 5 for common block write names). Multiple WRITE statements may be input, and there is no limit to the number which may be present. The presence of a WRITE will cause the block "name" to be printed for all cases of the run. The output will be in units of feet, pounds, degrees, or degrees Rankine. If the PLOT option is also selected, this output will be "mixed" with the PLOT file output on tape unit 3.

*

Any card with an asterisk (*) in Column 1 will be interpreted as a comment card. This permits detailed documentation of case inputs.

3.3 Typical Case Set-up

Figure 19 schematically shows how Missile Datcom inputs are structured. This example illustrates a multiple case job in which case 2 uses part of the case 1 inputs. This is accomplished through use of the SAVE control card. Case 1 is a body-wing-tail configuration; partial output, component buildup data, and a plot file are created. Case 2 uses the body and tail data of case 1 (the wing is deleted using DELETE), specifies panel deflection angles and sets the data required to trim.

There is no limit to the number of cases that can be "stacked" in a single run, provided that no more than 300 namelist inputs are "saved" between cases. If a SAVE control card is not present in a case, all previous case inputs are deleted.

3.3.1 Configuration Incrementing Case Set-up

A "configuration incrementing" case setup is shown in Figure 20. This figure shows the inputs for a three case setup fin parametric analysis. The first case is the calibration case with the remaining cases being used for the parametric analysis. Therefore, the first case must contain both the INCRMT control card and EXPR namelist. These should only appear in the first case.

3.4 Special Usage of Input Parameters

It is possible to manipulate the input geometry, such that unique configurations can be modeled. This section defines those capabilities.

3.4.1 Locating Panels on Varying Body Radii Segments

The fin panels can be located anywhere on the geometry. If they are to be positioned on a varying radii segment, select the root chord span station [SSPAN(1)] such that the center of the exposed root chord is on the surface mold line. Physically this places part of the panel within the body and part offset from the body.

If SSPAN(1) is input precisely as zero, the code will assume that panel semi-span stations relative to the root chord are defined. It will then interpolate the body geometry at the root chord center and add the body radius at this point to the user defined values in the SSPAN array.

Table 1 Body Addressable Configurations

CONFIGURATION	SUBSONIC $M \leq 0.6$	TRANSONIC $0.6 < M \leq 1.2$	SUPERSONIC $M > 1.2$
1. Nose Shape			
Conical			
Sharp	x	x	x
Blunted	x	x	x
Truncated	x	x	x
Tangent Ogive			
Sharp	x	x	x
Blunted	x	x	x
Truncated	x	x	x
Other		x	x
2. Centerbody Shape			
Cylinder	x	x	x
Elliptically Variable	x	x	x
3. Afterbody Shape			
Boattails			
Conical	x	x	x
Tangent Ogive	x	x	x
Other			x
Flares			
Conical	x	x	x
Ogive			x
Other			x

Table 2 Subsonic/Transonic Method Limitations

METHOD	RANGE PERMITTED	ACTION TAKEN IF EXCEEDED
Nose Bluntness (C_N, C_m)	Sharp Only	Uses Sharp Method
Conical Nose Slope	0 to 25 Degrees	Uses 25 Degrees
Boattail Shape	Cone or Ogive	Uses Cone
Conical Boattail Slope	0 to 16 Degrees	Extrapolates
Ogive Boattail Slope	0 to 28 Degrees	Extrapolates
Flare Shape	Cone	Uses Cone
Flare Slope	0 to 10 Degrees	Extrapolates
Airfoil t/c	0 to 12%	Continues, If Possible

Table 3 Namelist Alphanumeric Constants

NAMELIST	PERMITTED ALPHANUMERIC CONSTANTS	CONVERTED VALUE
(ALL)	UNUSED	1.0E-30 (Initialized Value)
REFQ	TURB	0.
	NATURAL	1.
AXIBOD or ELLBOD	CONICAL	0.
	CONE	0.
	OGIVE	1.
	POWER	2.
	HAACK	3.
	KARMAN	4.
PROTUB	VCYL	1.
	HCYL	2.
	BLOCK	5.
	FAIRING	6.
	LUG	3.
	SHOE	4.
FINSETn	HEX	0.
	NACA	1.
	ARC	2.
	USER	3.
INLET	AXI	3.
	2DTOP	1.
	2DSIDE	2.
EXPR	BODY	1.
	F1	2.
	F2	3.
	F3	4.
	F4	5.
	BF1	6.
	BF12	7.
	BF123	8.
	BF1234	9.

Table 4 Equivalent Sand Roughness

TYPE OF SURFACE	EQUIVALENT SAND ROUGHNESS k (INCHES)	RHR
Aerodynamically Smooth	0.0	0.0
Polished Metal or Wood	0.02 E-3 to 0.08 E-3	6 to 26
Natural Sheet Metal	0.16 E-3	53
Smooth Matte Paint, Carefully Applied	0.25 E-3	83
Standard Camouflage Paint, Average Application	0.40 E-3	133
Camouflage Paint, Mass-Production Spray	1.20 E-3	400
Dip Galvanized Metal Surface	6.0 E-3	2000
Natural Surface of Cast Iron	10.0 E-3	3333

PREFERRED RHR VALUES

APPLICATION	RHR
Steel Structural Parts	250
Aluminum and Titanium Structural Parts	125
Close Tolerance Surfaces	63
Seals	32

NAMELIST FLTCON

VARIABLE NAME	ARRAY DIMENSION	DEFINITION	UNITS	DEFAULT
NALPHA	-	NUMBER OF ANGLES OF ATTACK (AT LEAST 2)	-	-
ALPHA	20	ANGLE OF ATTACK OR TOTAL ANGLE OF ATTACK	DEG	-
BETA	-	SIDESLIP ANGLE	DEG	0.
PHI	-	AERODYNAMIC ROLL ANGLE	DEG	0.
NMACH	-	NUMBER OF MACH NUMBERS (AT LEAST 1)	-	-
MACH ①	20	MACH NUMBERS	-	-
REN ①	20	REYNOLDS NUMBER PER UNIT LENGTH	1/L ②	-
ALT ①	-	GEOMETRIC ALTITUDE	L ③	0.
VINF ①	20	FREESTREAM SPEED	L/SEC ④	-
TINF ①	20	FREESTREAM STATIC TEMPERATURE	DEG	-
PINF ①	20	FREESTREAM STATIC PRESSURE	F/(L*L) ⑤	-

① THE FOLLOWING COMBINATIONS SATISFY THE REYNOLDS NUMBER AND MACH NUMBER INPUT REQUIREMENTS

USER INPUT	PROGRAM COMPUTES
1. MACH, REN	(NONE)
2. MACH, ALT	PINF, TINF, REN
3. VINF, ALT	PINF, TINF, MACH, REN
4. VINF, TINF, PINF	MACH, REN
5. MACH, TINF, PINF	VINF, REN

② INPUT AS 1/FT FOR ENGLISH UNITS AND 1/M FOR METRIC UNITS
③ INPUT AS FT FOR ENGLISH UNITS AND M FOR METRIC UNITS
④ INPUT AS FT/SEC FOR ENGLISH UNITS AND M/SEC FOR METRIC UNITS
⑤ INPUT AS LB/FT^2 FOR ENGLISH UNITS AND N/M^2 FOR METRIC UNITS

Figure 1 Flight Conditions Inputs

NAMELIST REFQ

VARIABLE NAME	ARRAY DIMENSION	DEFINITION	UNITS	DEFAULT
SREF	-	REFERENCE AREA	L*L	②
LREF	-	REFERENCE LENGTH (LONGITUDINAL)	L	③
LATREF	-	REFERENCE LENGTH (LATERAL-DIRECTIONAL)	L	LREF
ROUGH ①	-	SURFACE ROUGHNESS HEIGHT	L ④	0.
RHR ①	-	ROUGHNESS HEIGHT RATING	-	0.
XCG	-	LONGITUDINAL POSITION OF C.G. (+AFT)	L	0.
ZCG	-	VERTICAL POSITION OF C.G. (+UP)	L	0.
SCALE	-	VEHICLE SCALE FACTOR (MULTIPLIER TO GEOMETRY)	-	1.
BLAYER	-	BOUNDARY LAYER TYPE: **TURB** FOR FULLY TURBULENT, **NATURAL** FOR NATURAL TRANSITION	-	TURB

① EITHER CAN BE USED
② DEFAULT IS BODY MAXIMUM CROSS-SECTIONAL AREA. IF NO BODY IS INPUT, MAXIMUM FIN PANEL AREA IS USED.
③ DEFAULT IS BODY MAXIMUM DIAMETER. IF NO BODY IS INPUT, MAXIMUM FIN PANEL MEAN GEOMETRIC CHORD IS USED.
④ INPUT AS INCHES FOR ENGLISH UNITS AND CENTIMETERS FOR METRIC UNITS.

Figure 2 Reference Quantity Inputs

NAMELIST AXIBOD
OPTION 1 INPUTS

VARIABLE NAME	ARRAY DIMENSION	DEFINITION	UNITS	DEFAULT
XO OR X0	-	LONGITUDINAL COORDINATE AT NOSE TIP	L	0.
TNOSE	-	NOSE SHAPE NAME: **CONICAL, CONE, OGIVE, POWER, HAACK,** OR **KARMAN**	-	OGIVE
POWER	-	EXPONENT, n, FOR POWER SERIES SHAPES, $(r/R) = (x/L)^n$	-	0.
LNOSE	-	NOSE LENGTH	L	-
DNOSE	-	NOSE SECTION BASE DIAMETER	L	1.0
BNOSE	-	NOSE BLUNTNESS RADIUS OR TRUNCATED NOSE RADIUS	L	0.
TRUNC	-	TRUNCATION FLAG (.TRUE. IF NOSE IS TRUNCATED)	-	.FALSE.
LCENTR	-	CENTERBODY LENGTH	L	0.
DCENTR	-	CENTERBODY BASE DIAMETER	L	DNOSE
TAFT ①	-	AFTERBODY SHAPE NAME: **CONICAL, CONE,** OR **OGIVE**	-	CONICAL
LAFT ①	-	AFTERBODY LENGTH	L	0.
DAFT ①	-	AFTERBODY BASE DIAMETER	L	-
DEXIT	-	DIAMETER OF NOZZLE EXIT	L	-
BASE ②	-	BASE-JET PLUME INTERACTION FLAG (.TRUE. IF CALCULATIONS DESIRED)	-	.FALSE.
BETAN ②	-	NOZZLE EXIT ANGLE	DEG	-
JMACH ③	20	JET MACH NUMBER AT NOZZLE EXIT	-	-
PRAT ③	20	JET TO FREESTREAM STATIC PRESSURE RATIO	-	-
TRAT ③	20	JET TO FREESTREAM STAGNATION TEMPERATURE RATIO	-	-

① AFT BODY MUST NOT BE CYLINDRICAL (i.e. **DAFT** NOT EQUAL TO **DCENTR**)
② ONLY REQUIRED IF BASE-JET PLUME INTERACTION CALCULATIONS DESIRED. (**DEXIT** MUST NOT EQUAL ZERO)
③ **JMACH, PRAT,** AND **TRAT** ARE SPECIFIED FOR EACH FREESTREAM MACH NUMBER OR VELOCITY INPUT IN NAMELIST $FLTCON

Figure 3a Axisymmetric Body Geometry Inputs - Option 1

NAMELIST AXIBOD

OPTION 2 INPUTS (USE ONLY IF MACH > 1.2)

VARIABLE NAME	ARRAY DIMENSION	DEFINITION	UNITS	DEFAULT
XO OR X0	-	LONGITUDINAL COORDINATE AT NOSE TIP	L	0.
BNOSE	-	NOSE BLUNTNESS RADIUS OR TRUNCATED NOSE RADIUS	L	0.
TRUNC	-	TRUNCATION FLAG (.TRUE. IF NOSE IS TRUNCATED)	-	.FALSE.
DEXIT	-	DIAMETER OF NOZZLE EXIT	L	-
NX	-	NUMBER OF INPUT STATIONS	-	-
X ①	50	LONGITUDINAL COORDINATES	L	-
R	50	RADIUS AT EACH X STATION	L	-
DISCON	20	INDICES OF X STATIONS WHERE THE SURFACE SLOPE IS DISCONTINUOUS	-	-

① X(NX) MUST BE END OF BODY

Figure 3b Axisymmetric Body Geometry Inputs - Option 2

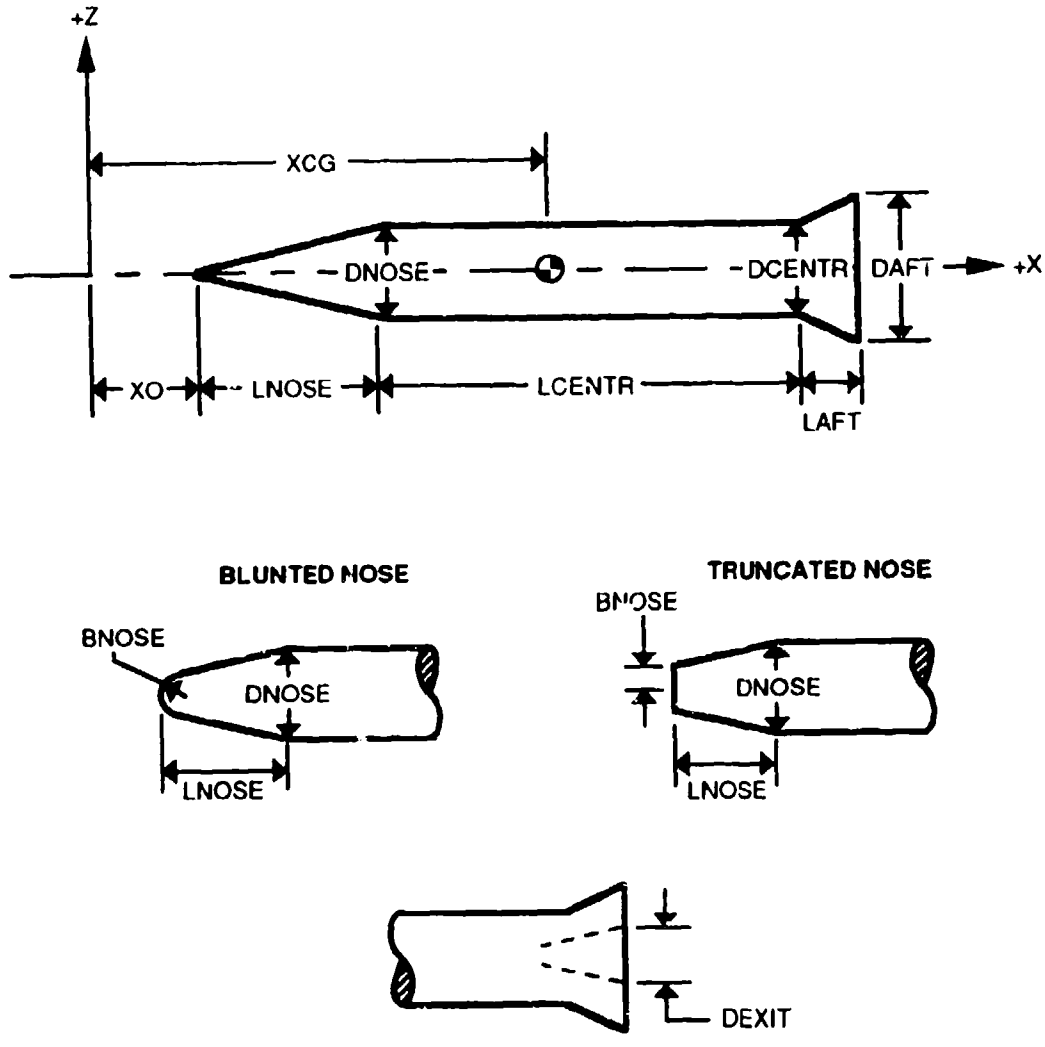

Figure 4 Body Geometry Inputs

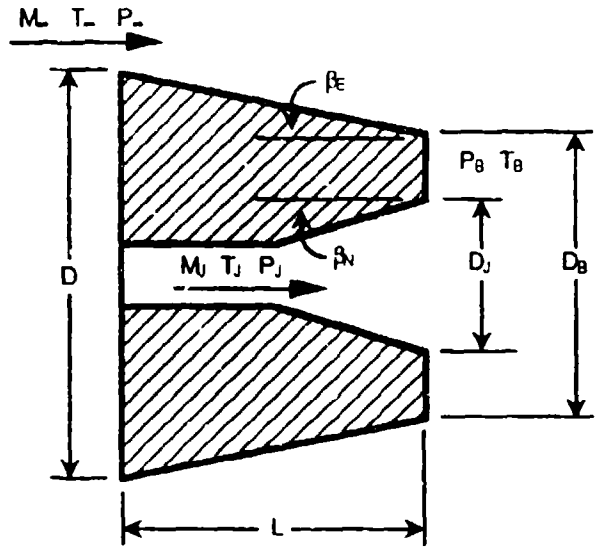

Input Parameter	Symbol	Min. Value	Max. Value
Boattail shape	--	Cylinder, Cone, Ogive	
Boattail fineness ratio	L/D	0	2
Boattail terminal angle	β_E	0°	12°
Jet pressure ratio	P_J/P_∞	0	10
Freestream Mach number	M_∞	2	5
Angle of Attack	α	0°	8°
Jet Mach number	M_J	$M_\infty - 1$	$M_\infty + 1$
Nozzle terminal angle	β_N	5°	25°
Jet diameter ratio	D_J/D_B	0.80	0.95
Jet temperature ratio	$T_{tj}/T_{t\infty}$	4	10

Note; If input parameter is not between minimum and maximum value the code will extrapolate

Figure 5 Base-Jet Plume Interaction Parameters

NAMELIST ELLBOD
OPTION 1 INPUTS

VARIABLE NAME	ARRAY DIMENSION	DEFINITION	UNITS	DEFAULT
XO OR X0	-	LONGITUDINAL COORDINATE AT NOSE TIP	L	0.
TNOSE	-	NOSE SHAPE NAME: **CONICAL**, **CONE**, **OGIVE**, **POWER**, **HAACK**, OR **KARMAN**	-	OGIVE
POWER	-	EXPONENT, n, FOR POWER SERIES SHAPES, $(r/R) = (x/L)^n$	-	0.
LNOSE	-	NOSE LENGTH	L	-
WNOSE	-	NOSE SECTION BASE WIDTH	L	1.0
BNOSE	-	NOSE BLUNTNESS RADIUS OR TRUNCATED NOSE RADIUS	L	0.
TRUNC	-	TRUNCATION FLAG (.TRUE. IF NOSE IS TRUNCATED)	-	.FALSE.
ENOSE	-	ELLIPTICITY AT NOSE BASE (H/W)	-	1.0
LCENTR	-	CENTERBODY LENGTH	L	0.
WCENTR	-	CENTERBODY BASE WIDTH	L	WNOSE
ECENTR	-	ELLIPTICITY AT CENTERBODY BASE (H/W)	-	1.0
TAFT	-	AFTERBODY SHAPE NAME: **CONICAL**, **CONE**, OR **OGIVE**	-	CONICAL
LAFT ①	-	AFTERBODY LENGTH	L	0.
WAFT	-	AFTERBODY BASE WIDTH	L	-
EAFT	-	ELLIPTICITY AT AFT BODY BASE (H/W)	-	1.0
DEXIT	-	DIAMETER OF NOZZLE EXIT	L	-

① AFT BODY MUST NOT BE CYLINDRICAL (i.e. **WAFT** NOT EQUAL TO **WCENTR**)

Figure 6a Elliptical Body Geometry Inputs - Option 1

NAMELIST ELLBOD
OPTION 2 INPUTS (USE ONLY IF MACH > 1.2)

VARIABLE NAME	ARRAY DIMENSION	DEFINITION	UNITS	DEFAULT
XO OR X0	-	LONGITUDINAL COORDINATE AT NOSE TIP	L	0.
BNOSE	-	NOSE BLUNTNESS RADIUS OR TRUNCATED NOSE RADIUS	L	0.
TRUNC	-	TRUNCATION FLAG (.TRUE. IF NOSE IS TRUNCATED)	-	.FALSE.
DEXIT	-	DIAMETER OF NOZZLE EXIT	L	-
NX	-	NUMBER OF INPUT STATIONS	-	-
X ①	50	LONGITUDINAL COORDINATES	L	-
W ②	50	BODY HALF-WIDTH AT EACH X STATION	L	-
DISCON	20	INDICES OF X STATIONS WHERE THE SURFACE SLOPE IS DISCONTINUOUS	-	-
H ②	50	BODY HALF-HEIGHT AT EACH X STATION	L	-
ELLIP ②	50	BODY HEIGHT TO WIDTH RATIO AT EACH X STATION	-	1.0

① X(NX) MUST BE END OF BODY
② ONE OF THE FOLLOWING COMBINATIONS IS REQUIRED:
W AND H, W AND ELLIP, OR H AND ELLIP

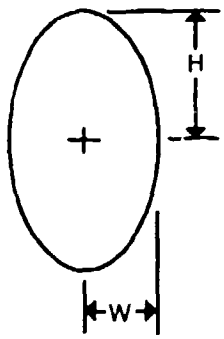

Figure 6b Elliptical Body Geometry Inputs - Option 2

NAMELIST PROTUB

VARIABLE NAME	ARRAY DIMENSION	DEFINITION	UNITS	DEFAULT
NPROT	-	NUMBER OF PROTUBERANCE SETS (20 MAXIMUM)	-	0.
PTYPE	20	PROTUBERANCE SET TYPE: **VCYL**, **HCYL**, **BLOCK**, **FAIRING**, **LUG**, OR **SHOE** ②	-	-
XPROT	20	LONGITUDINAL DISTANCE FROM MISSILE NOSE TO PROTUBERANCE SET	L	-
NLOC ①	20	NUMBER OF PROTUBERANCES IN EACH PROTUBERANCE SET	-	0.
LPROT	100	LENGTH OF EACH MEMBER OR PROTUBERANCE	L	-
WPROT	100	WIDTH OF EACH MEMBER OR PROTUBERANCE	L	-
HPROT	100	HEIGHT OF EACH MEMBER OR PROTUBERANCE	L	-
OPROT	100	VERTICAL OFFSET OF EACH MEMBER OR PROTUBERANCE	L	0.

(LPROT, WPROT, HPROT, OPROT: ③)

① **NLOC** ACCOUNTS FOR IDENTICAL PROTUBERANCES (SAME SIZE AND SHAPE) LOCATED AROUND THE BODY AT THE SAME AXIAL LOCATION.

② **LUG** TYPE HAS 4 MEMBERS. **SHOE** TYPE HAS 3 MEMBERS. **LPROT**, **WPROT**, **HPROT**, AND **OPROT** MUST BE SPECIFIED FOR EACH MEMBER.

③ INPUT FOR EACH PROTUBERANCE (**VCYL**, **HCYL**, **BLOCK**, OR **FAIRING** TYPE) OR EACH PROTUBERANCE MEMBER (**LUG** AND **SHOE** TYPE)

Figure 7 Protuberance Inputs

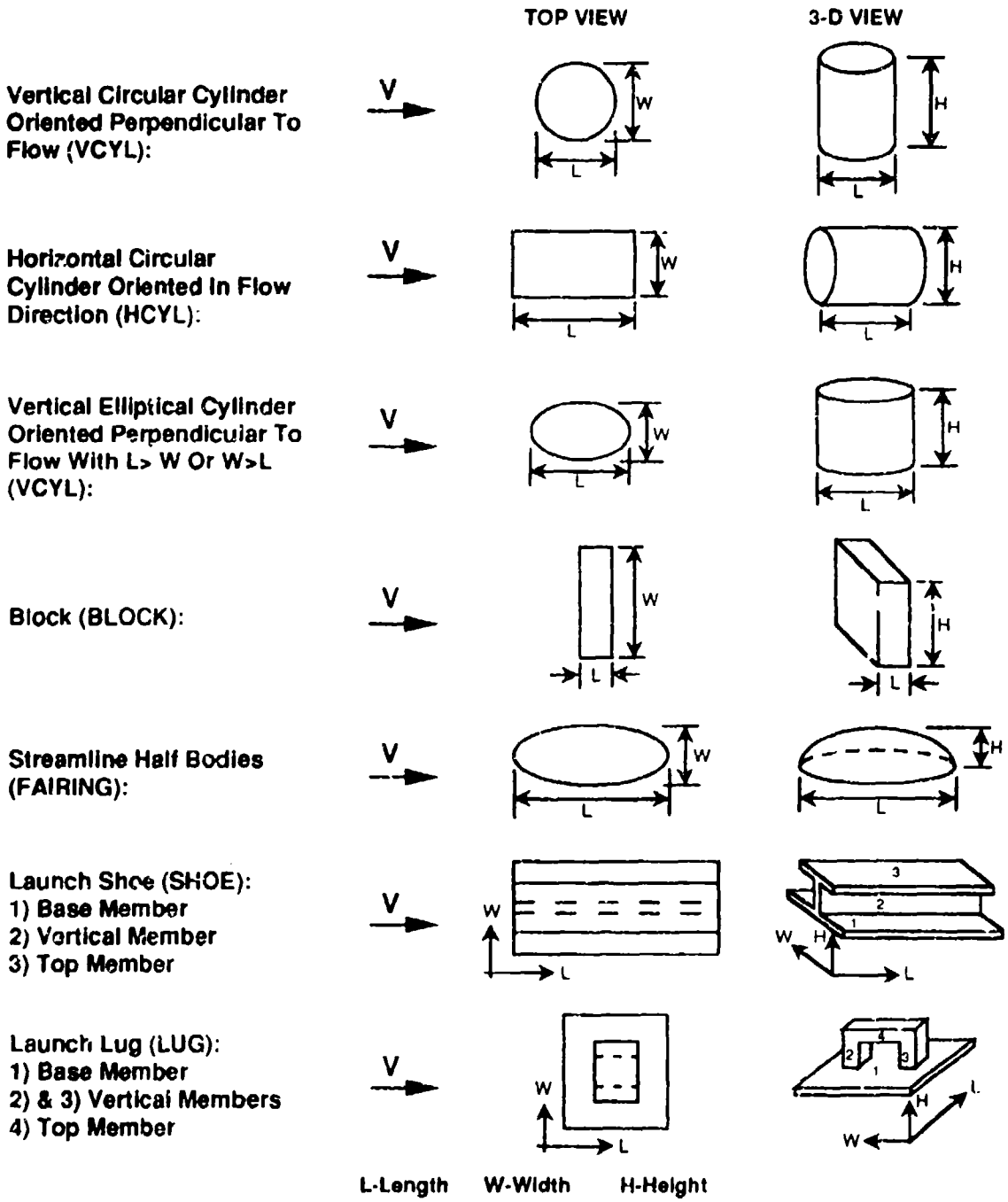

Note; Length, width, height, and offset must be input for each member of launch lug and launch shoe types

Note; Offset is the perpendicular distance from the missile mold line to the bottom of the protuberance or protuberance member

Figure 8 Protuberance Shapes Available

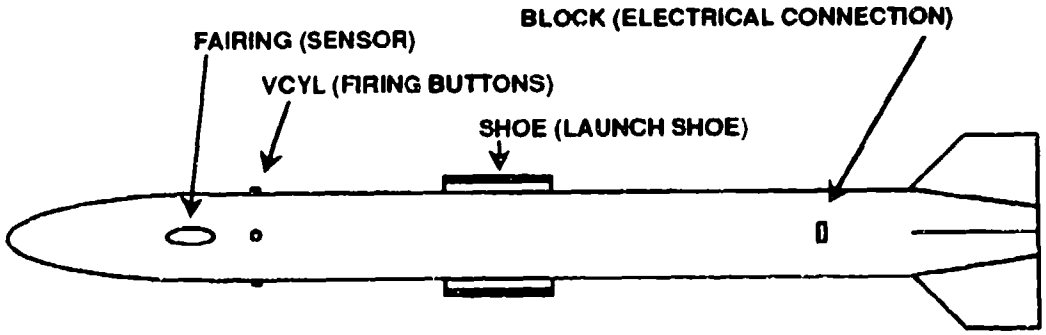


```
CASEID PROTUBERANCE EXAMPLE CASE
DIM IN
NO LAT
 $REFQ    XCG=39.0,$
 $FLTCON  NMACH=3.,MACH=0.4,0.8,2.0,
          REN=3.E06,3.E06,3.E06,ALT=0.0,
          NALPHA=5.,ALPHA=-8.,-4.,0.,4.,8.,$
 $AXIBOD  TNOSE=OGIVE,LNOSE=12.0,DNOSE=12.0,
          LCENTR=54.0,DCENTR=12.0,
          TAFT=CONE,LAFT=12.0,DAFT=6.0,DEXIT=5.0,$
 $PROTUB  NPROT=4.,
          PTYPE=FAIRING,VCYL,SHOE,BLOCK,
          XPROT=14.,22.,39.,56.,
          NLOC=2.,4.,2.,1.,
          LPROT=5.,1.,10.,10.,10.,0.5,
          WPROT=2.,1.,4.,0.25,1.,1.,
          HPROT=2.,0.5,0.1,0.75,0.25,0.25,
          OPROT=0.,0.,0.,0.1,0.85,0.,$
 $FINSET1 SSPAN=0.0,9.0,CHORD=14.0,8.0,
           XLE=64.0,SWEEP=0.0,STA=1.0,NPANEL=4.,
           PHIF=45.,135.,225.,315.,$
PRINT GEOM BODY
PRINT AERO BODY
SAVE
NEXT CASE
```

NOTE; Length, Width, and Height is input for each member of the launch shoe

Figure 9 Protuberance Example Input File

NAMELIST FINSETn
NOMINAL INPUTS

VARIABLE NAME	ARRAY DIMENSION	DEFINITION	UNITS	DEFAULT
SECTYP	-	TYPE OF SECTION TO BE DEFINED: HEX, NACA, ARC, OR USER	-	HEX
SSPAN ①	10	SEMI-SPAN	L	-
CHORD	10	PANEL CHORD LENGTH AT EACH SSPAN	L	-
XLE	10	DISTANCE FROM NOSE TIP TO CHORD LEADING EDGE AT EACH SSPAN	L	0.0
SWEEP ②	10	SWEEPBACK ANGLE AT EACH SSPAN	DEG	0.0
STA	10	CHORD STATION USED IN MEASURING SWEEP AT EACH SSPAN (0.0=LEADING EDGE, 1.0=TRAILING EDGE)	-	1.0
LER ③	10	PANEL LEADING EDGE RADIUS AT EACH SPAN STATION	L	-
NPANEL	-	NUMBER OF PANELS IN SET (1-8)	-	4
PHIF	8	ROLL ANGLE OF EACH FIN MEASURED CLOCKWISE FROM TOP VERTICAL CENTER LOOKING FORWARD	DEG	④
GAM	8	DIHEDRAL OF EACH FIN (POSITIVE WHEN PHIF IS INCREASED, SEE FIG. 12)	DEG	0.0
SKEW	-	ANGLE BETWEEN THE Y AXIS AND THE FIN HINGE LINE (POSITIVE SWEPT BACK)	DEG	0.0

① IF SSPAN(1)=0.0, INPUTS ARE RELATIVE TO ROOT CHORD NOT BODY CENTERLINE
② IF USING SWEEP, SPECIFY ONLY XLE(1); IF USING XLE DO NOT SPECIFY SWEEP
③ NOT REQUIRED FOR NACA AIRFOILS, REQUIRED FOR USER AIRFOILS
④ IF PHIF NOT INPUT THE NUMBER OF PANELS ARE EVENLY SPACED ABOUT THE BODY.

Figure 10a Fin Geometry Inputs - Nominal

NAMELIST FINSETn
OPTIONAL INPUTS

VARIABLE NAME	ARRAY DIMENSION	DEFINITION	UNITS	DEFAULT
ZUPPER	10	MAXIMUM THICKNESS TO CHORD RATIO OF UPPER SURFACE	-	0.025
ZLOWER	10	MAXIMUM THICKNESS TO CHORD RATIO OF LOWER SURFACE	-	ZUPPER
LMAXU	10	FRACTION OF CHORD FROM SECTION LEADING EDGE TO MAXIMUM THICKNESS OF UPPER SURFACE	-	0.5
LMAXL	10	FRACTION OF CHORD FROM SECTION LEADING EDGE TO MAXIMUM THICKNESS OF LOWER SURFACE	-	LMAXU
LFLATU	10	FRACTION OF CHORD OF CONSTANT THICKNESS SECTION ON UPPER SURFACE	-	0.0
LFLATL	10	FRACTION OF CHORD OF CONSTANT THICKNESS SECTION ON LOWER SURFACE	-	LFLATU

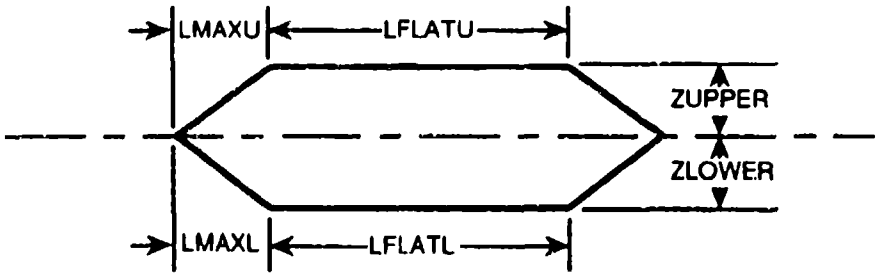

NOTE; THESE PARAMETERS MUST BE INPUT AT EACH SPAN STATION

Figure 10b Fin Geometry Inputs - Optional

NAMELIST FINSETn
INPUTS FOR "USER" SECTIONS

VARIABLE NAME	ARRAY DIMENSION	DEFINITION	UNITS	DEFAULT
XCORD	50	CHORD STATION, FRACTION OF CHORD FROM LEADING EDGE	-	-
MEAN ①	50	DISTANCE BETWEEN THE MEAN LINE AND CHORD LINE AT EACH XCORD, FRACTION OF CHORD	-	-
THICK ①	50	THICKNESS TO CHORD RATIO AT EACH XCORD	-	-
YUPPER ①	50	UPPER SURFACE COORDINATES, FRACTION OF CHORD, AT EACH XCORD	-	-
YLOWER ①	50	LOWER SURFACE COORDINATES, FRACTION OF CHORD, AT EACH XCORD	-	-

NOTE; ALL VARIABLES ARE EXPRESSED AS FRACTIONS OF CHORD
LEADING EDGE RADIUS (VARIABLE LER) MUST BE DEFINED

① EITHER MEAN AND THICK OR YUPPER AND YLOWER ARE REQUIRED

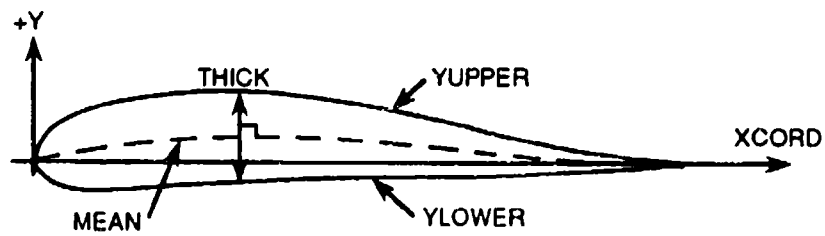

Figure 10c Fin Geometry Inputs - User Airfoils

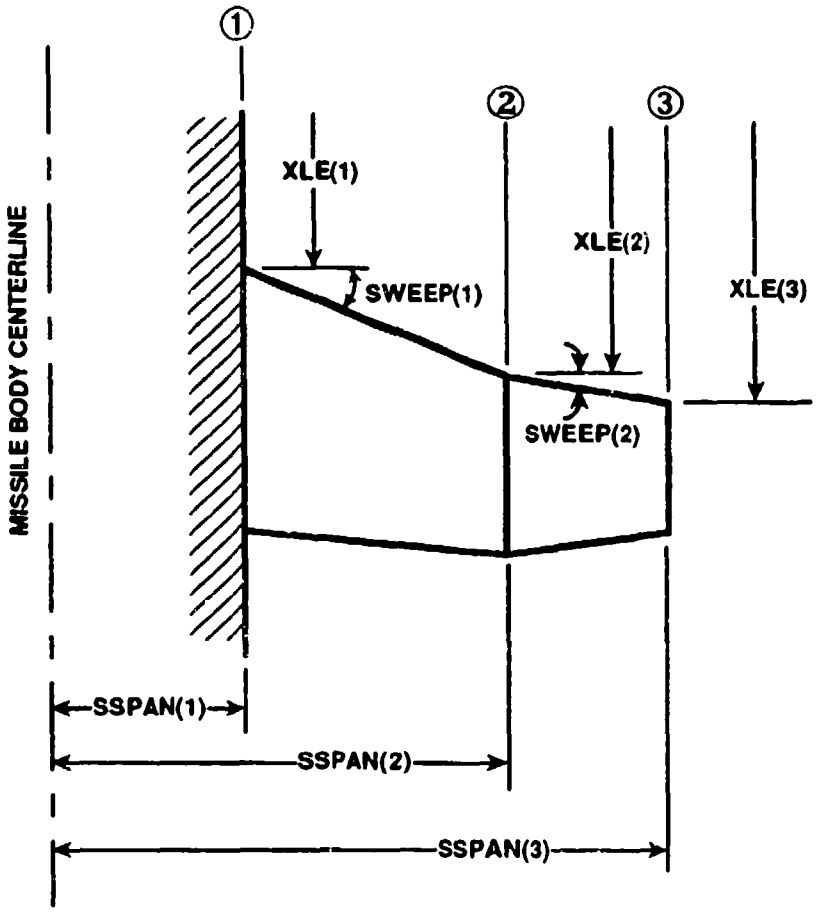

NOTE; XLE IS MEASURED FROM NOSE TIP

IF SSPAN(1) IS INPUT AS ZERO, SSPAN INPUTS ARE RELATIVE TO BODY SURFACE MOLD LINE

Figure 11 Selecting Panel Break Points

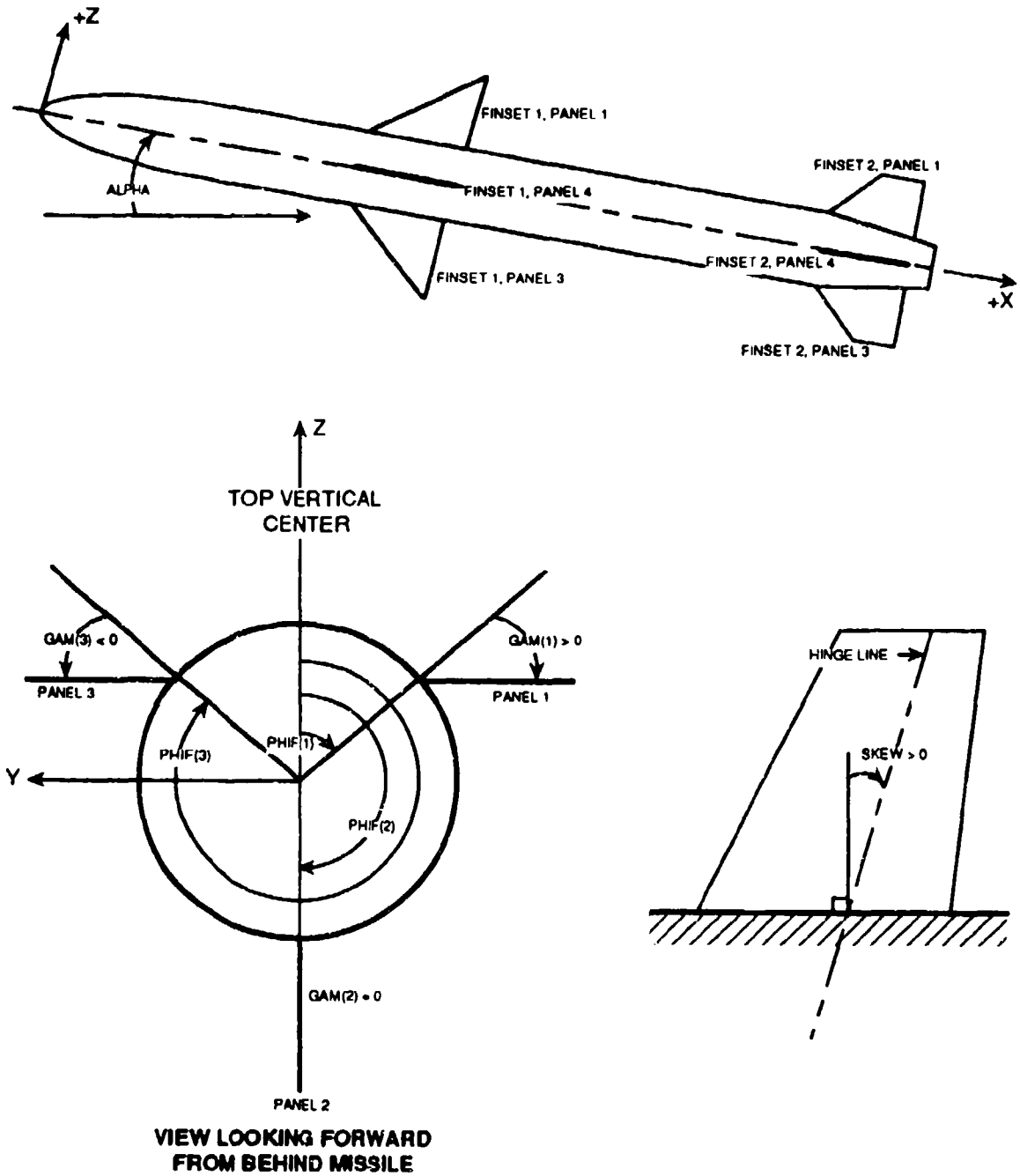

Figure 12 Fin Numbering and Orientation

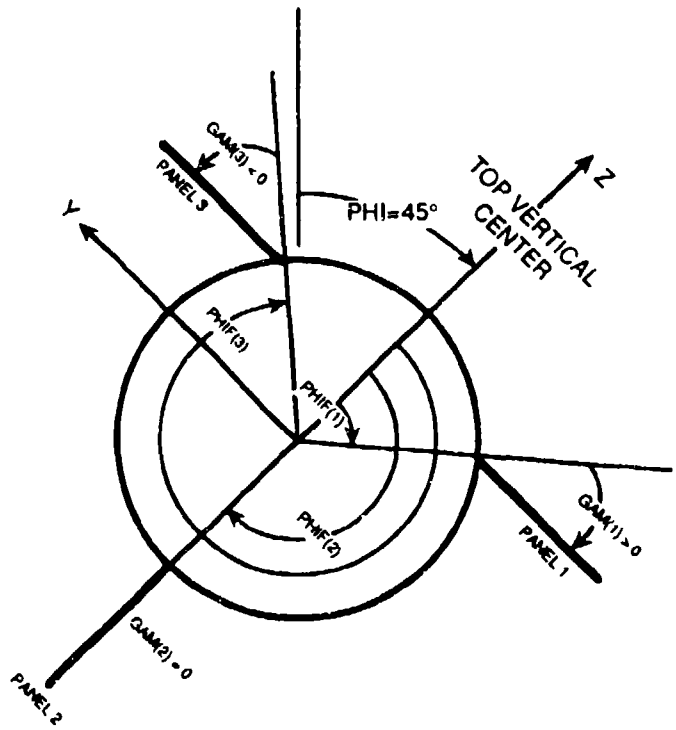

VIEW LOOKING FORWARD FROM BEHIND MISSILE

PHI IS THE BODY ROLL ANGLE
PHIF IS THE FIN PANEL ROLL ANGLE

Figure 13 Roll Attitude vs Fin Orientation

NAMELIST DEFLCT

VARIABLE NAME	ARRAY DIMENSION	DEFINITION	UNITS	DEFAULT
DELTA1 ①	8	DEFLECTION ANGLES FOR EACH PANEL IN FIN SET 1 (SUBSCRIPT IS FIN NUMBER)	DEG	0.
DELTA2 ①	8	DEFLECTION ANGLES FOR EACH PANEL IN FIN SET 2 (SUBSCRIPT IS FIN NUMBER)	DEG	0.
DELTA3 ①	8	DEFLECTION ANGLES FOR EACH PANEL IN FIN SET 3 (SUBSCRIPT IS FIN NUMBER)	DEG	0.
DELTA4 ①	8	DEFLECTION ANGLES FOR EACH PANEL IN FIN SET 4 (SUBSCRIPT IS FIN NUMBER)	DEG	0.
XHINGE	4	DISTANCE FROM ROOT CHORD LEADING EDGE TO PANEL HINGE LINE FOR EACH FIN SET	L	CR/2 ②
SKEW	4	SWEEPBACK OF HINGE LINE FOR EACH FIN SET	DEG	0.

① PANEL NUMBERING IS SHOWN IN FIGURE 12
② DEFAULT IS AT ONE-HALF THE EXPOSED ROOT CHORD

NOTE; A POSITIVE DEFLECTION ANGLE PRODUCES A NEGATIVE BODY AXIS ROLLING MOMENT AT ZERO ANGLE OF ATTACK

Figure 14 Panel Deflection Inputs

NAMELIST TRIM

VARIABLE NAME	ARRAY DIMENSION	DEFINITION	UNITS	DEFAULT
SET	-	FIN SET TO BE USED FOR TRIM	-	1.
PANL1	-	.TRUE. IF PANEL TO BE USED	-	.FALSE.
PANL2	-	.TRUE. IF PANEL TO BE USED	-	.FALSE.
PANL3	-	.TRUE. IF PANEL TO BE USED	-	.FALSE.
PANL4 ①	-	.TRUE. IF PANEL TO BE USED	-	.FALSE.
PANL5	-	.TRUE. IF PANEL TO BE USED	-	.FALSE.
PANL6	-	.TRUE. IF PANEL TO BE USED	-	.FALSE.
PANL7	-	.TRUE. IF PANEL TO BE USED	-	.FALSE.
PANL8	-	.TRUE. IF PANEL TO BE USED	-	.FALSE.
DELMIN	-	MINIMUM NEGATIVE DEFLECTION	DEG	-25.
DELMAX ②	-	MAXIMUM POSITIVE DEFLECTION	DEG	+20.
ASYM	4	.TRUE. IF PANEL WITH SUBSCRIPT IS TO BE DEFLECTED OPPOSITE TO NORMAL SIGN CONVENTION (ASYMMETRIC DEFLECTIONS)	-	.FALSE.

① DEFAULTS APPLY ONLY IF ALL PANL# DATA ARE NOT INPUT OR .FALSE.
② BOTH DELMIN AND DELMAX MUST BE SPECIFIED

Figure 15 Trim Inputs

NAMELIST INLET

VARIABLE NAME	ARRAY DIMENSION	DEFINITION	UNITS	DEFAULT
NIN	-	NUMBER OF INLETS (MAXIMUM=20)	-	-
INTYPE	-	TYPE OF INLET: **2DTOP**, **2DSIDE**, OR **AXI** ①	-	-
XINLT	-	LONGITUDINAL DISTANCE FROM NOSE TIP TO INLET LEADING EDGE	L	-
XDIV	-	LONGITUDINAL DISTANCE FROM INLET LEADING EDGE TO DIVERTER LEADING EDGE	L	-
HDIV	-	HEIGHT OF DIVERTER LEADING EDGE	L	-
LDIV	-	LENGTH OF DIVERTER	L	-
PHI ②	20	INLET ROLL ORIENTATIONS	DEG	-
X ③	5	INLET LONGITUDINAL POSITIONS RELATIVE TO INLET LEADING EDGE	L	-
H ④ ③	5	INLET HEIGHTS AT THE LONGITUDINAL POSITIONS	L	-
W ⑤ ③	5	INLET WIDTHS AT THE LONGITUDINAL POSITIONS	L	-
COVER	-	IF COVER=.TRUE. INLETS ARE COVERED	-	.FALSE.
RAMP	-	EXTERNAL COMPRESSION RAMP ANGLE	DEG	-
ADD	-	IF ADD=.TRUE. INLET ADDITIVE DRAG IS CALCULATED	-	.FALSE.
MFR ⑥	20	MASS FLOW RATIO FOR EACH MACH NUMBER ($0 \le MFR \le 1.0$)	-	-

① **2DTOP**: TWO DIMENSIONAL TOP MOUNTED, **2DSIDE**: TWO DIMENSIONAL SIDE MOUNTED, **AXI**: AXISYMMETRIC
② ROLL POSITIONS FROM TOP VERTICAL CENTER. SAME CONVENTION AS FIN ROLL POSITIONS.
③ SPECIFY **X**, **H**, AND **W** AT FIVE INLET LOCATIONS: 1) LEADING EDGE, 2) COWL LIP LEADING EDGE, 3) MIDBODY START, 4) START OF BOATTAIL, 5) END OF BOATTAIL
④ NOT REQUIRED IF INTYPE=**AXI**
⑤ IF INTYPE=**AXI**, W=DIAMETER
⑥ SPECIFY MASS FLOW RATIO, **MFR**, FOR EACH FREE STREAM MACH NUMBER OR VELOCITY GIVEN IN $FLTCON (ONLY REQUIRED IF **ADD** = .TRUE.)

Figure 16 Inlet Geometry Inputs

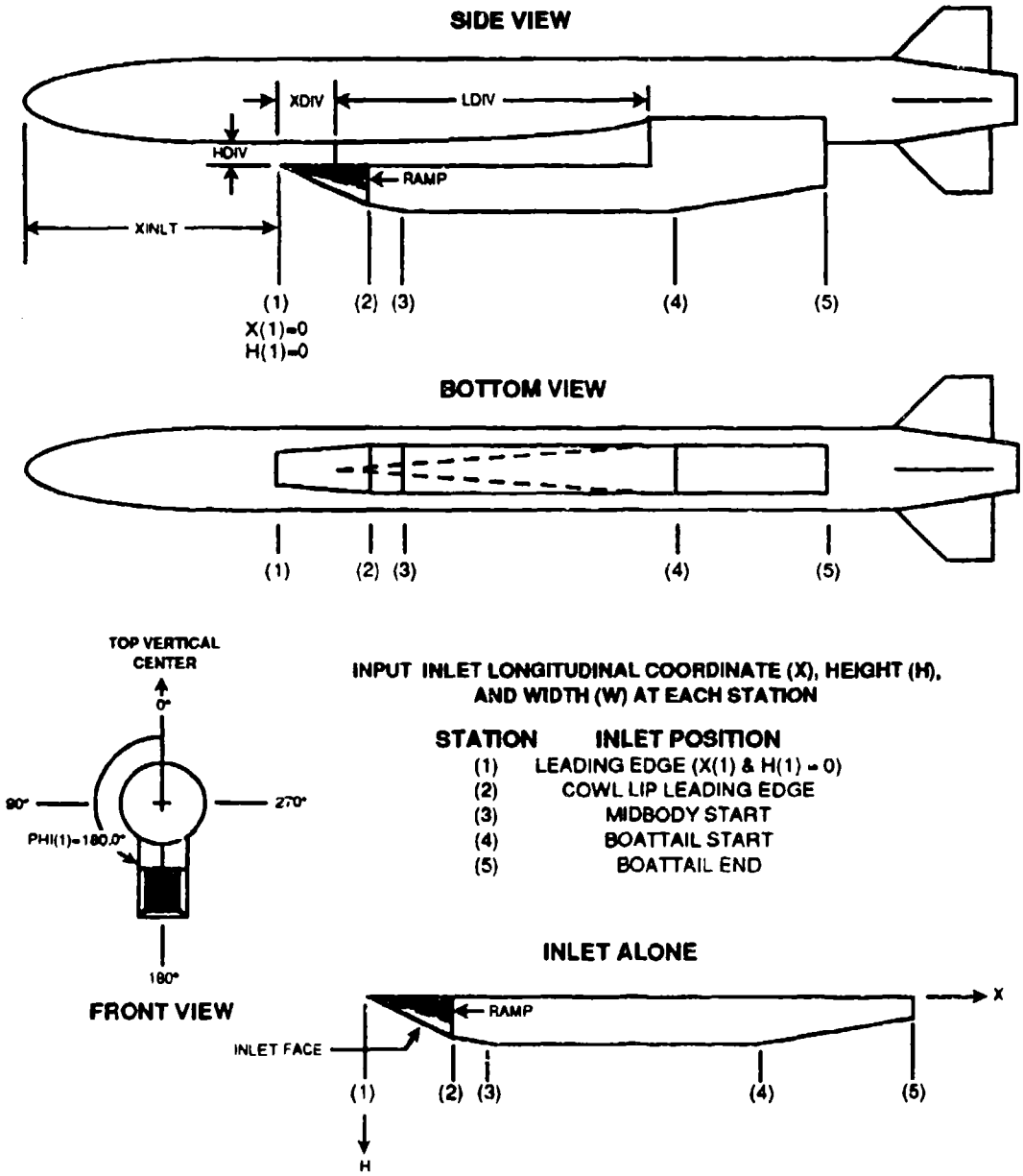

NOTES;

- INLET ROLL ORIENTATION IS SAME CONVENTION AS FIN ROLL ORIENTATION.
- RAMP IS THE EXTERNAL COMPRESSION RAMP ANGLE (SHOWN SHADED IN THE SIDE VIEW)
- HEIGHT OF THE DIVERTER IS SPECIFIED AT THE DIVERTER LEADING EDGE
- THE DIVERTER WIDTH IS EQUAL TO THE INLET WIDTH AT LDIV
- IF INLET IS COVERED (COVER=.TRUE.) A PLUG IS PLACED BETWEEN STATIONS 1 AND 2 FLUSH WITH THE INLET FACE

Figure 17a Top-Mounted 2-D Inlet/Diverter Geometry

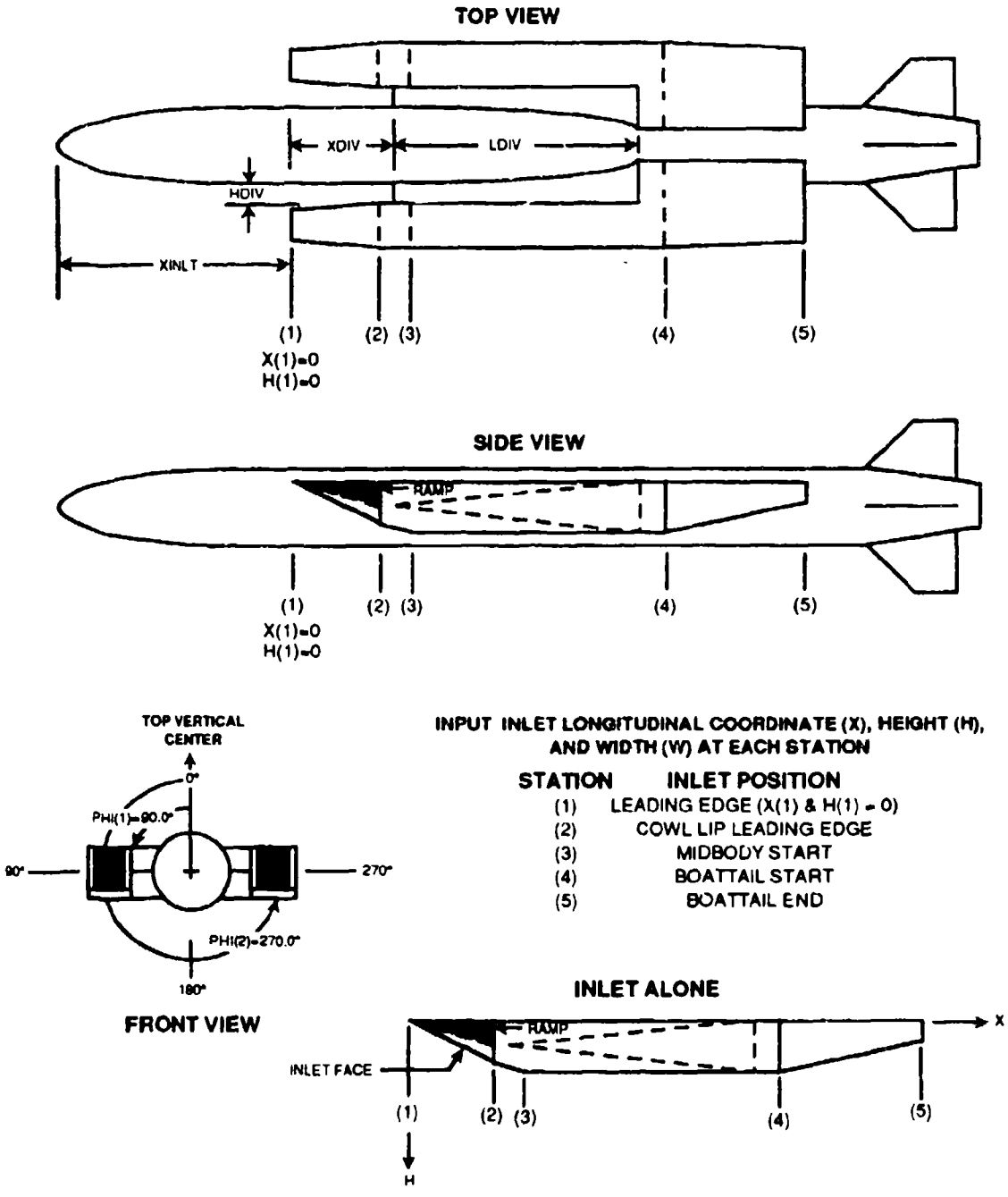

NOTES;

- INLET ROLL ORIENTATION IS SAME CONVENTION AS FIN ROLL ORIENTATION.
- RAMP IS THE EXTERNAL COMPRESSION RAMP ANGLE (SHOWN SHADED IN THE SIDE VIEW)
- HEIGHT OF THE DIVERTER IS SPECIFIED AT THE DIVERTER LEADING EDGE
- THE DIVERTER WIDTH IS EQUAL TO THE INLET WIDTH AT LDIV
- IF INLET IS COVERED (COVER=.TRUE.) A PLUG IS PLACED BETWEEN STATIONS 1 AND 2 FLUSH WITH THE INLET FACE

Figure 17b Side-Mounted 2-D Inlet/Diverter Geometry

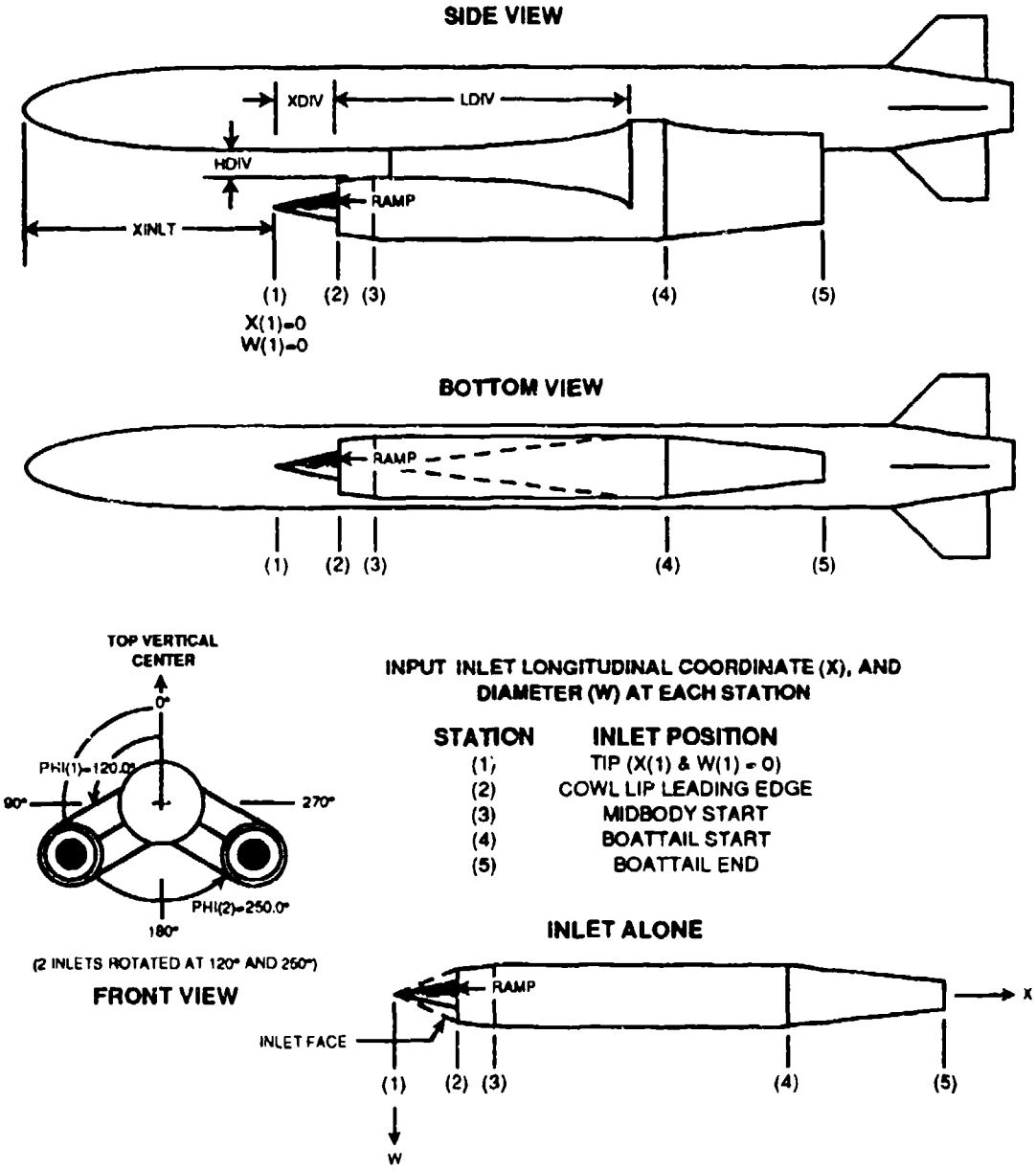

NOTES:

- INLET ROLL ORIENTATION IS SAME CONVENTION AS FIN ROLL ORIENTATION.
- RAMP IS THE EXTERNAL COMPRESSION CONE HALF-ANGLE (SHOWN SHADED IN THE SIDE VIEW)
- HEIGHT OF THE DIVERTER IS SPECIFIED AT THE DIVERTER LEADING EDGE
- THE DIVERTER WIDTH IS EQUAL TO THE INLET DIAMETER AT LDIV
- IF INLET IS COVERED (COVER=.TRUE.) A PLUG IS PLACED BETWEEN STATIONS 1 AND 2 FLUSH WITH THE INLET FACE

Figure 17c Axisymmetric Inlet/Diverter Geometry

NAMELIST EXPR

VARIABLE NAME	ARRAY DIMENSION	DEFINITION	UNITS	DEFAULT
MACH	-	MACH NUMBER	-	-
NALPHA	-	NUMBER OF ANGLES OF ATTACK (2-20)	-	-
ALPHA	20	ANGLES OF ATTACK FOR DATA	DEG	-
SREF	-	REFERENCE AREA FOR DATA	L*L	①
LREF	-	LONGITUDINAL REFERENCE LENGTH FOR DATA	L	②
LATREF	-	LATERAL REFERENCE LENGTH FOR DATA	L	LREF
XCG	-	LONGITUDINAL C.G. FOR DATA	L	0.
ZCG	-	VERTICAL C.G. FOR DATA	L	0.
CONF	-	CONFIGURATION FOR DATA	-	-
		SELECT ONE OF THE FOLLOWING		
		BODY - BODY		
		F1 - WING		
		F2 - TAIL		
		F3 - THIRD FIN SET		
		F4 - FOURTH FIN SET		
		BF1 - BODY-WING		
		BF12 - BODY-2 FIN SETS		
		BF123 - BODY-3 FIN SETS		
		BF1234 - BODY-4 FIN SETS		
CN	20	C_N DATA VS ALPHA	-	-
CM	20	C_M DATA VS ALPHA	-	-
CA	20	C_A DATA VS ALPHA	-	-
CY	20	C_Y DATA VS ALPHA	-	-
CSN	20	C_n DATA VS ALPHA	-	-
CSL	20	C_l DATA VS ALPHA	-	-

① DEFAULT IS BODY MAXIMUM CROSS-SECTIONAL AREA. IF NO BODY IS INPUT, MAXIMUM FIN PANEL AREA IS USED.

② DEFAULT IS BODY MAXIMUM DIAMETER. IF NO BODY IS INPUT, MAXIMUM FIN PANEL MEAN GEOMETRIC CHORD IS USED.

Figure 18 Experimental Data Inputs

Table 5 Common Block DUMP and WRITE Names

COMMON BLOCK	DUMP NAME	WRITE NAME
ABODIN	BDIN	ABODIN or EBODIN
BDWORK	BDWK	BDWORK
CASEID		CASEID
CONST		CONST
DBODY	DBOD	DBODY
DB1	DB1	DB1
DB12	DB12	DB12
DB123	DB13	DB123
DB1234	DB14	DB1234
DESIG		DESIG
DFIN1	DF1	DFIN1
DFIN2	DF2	DFIN2
DFIN3	DF3	DFIN3
DFIN4	DF4	DFIN4
DFLAGS		DFLAGS
DUMPF		DUMPF
FLC	FLT	FLC
FSET1	F1IN	FSET1
FSET2	F2IN	FSET2
FSET3	F3IN	FSET3
FSET4	F4IN	FSET4
F1WORK	F1WK	F1WORK
F2WORK	F2WK	F2WORK
F3WORK	F3WK	F3WORK
F4WORK	F4WK	F4WORK
GEOBOD	GEOB	GEOBOD
GEOFS1	F1GM	GEOFS1
GEOFS2	F2GM	GEOFS2
GEOFS3	F3GM	GEOFS3
GEOFS4	F4GM	GEOFS4
INCID		INCID
INLETN	INLI	INLETN
INLTD	INLD	INLTD
INPCON		INPCON
LOGIC		LOGIC
PAERO		PAERO
REFQN	REFQ	REFQN
SBODY	SBOD	SBODY
SB1	SB1	SB1
SB12	SB12	SB12
SB123	SB13	SB123
SB1234	SB14	SB1234
SFIN1	SF1	SFIN1
SFIN2	SF2	SFIN2
SFIN3	SF3	SFIN3
SFIN4	SF4	SFIN4
THERY		THERY
TOTALC	FLCT	TOTALC
TRACE		TRACE
TRIMD		TRIMD
TRIMIN		TRIMIN
UTRIMD		UTRIMD

Table 6 Airfoil Designation Using the NACA Control Card

INPUT NACA DESIGNATION	NACA SERIES AIRFOIL	RESTRICTIONS
0012.25	4-Digit	None. Fractional thickness may be specified.
23118.50	5-Digit	None. Fractional thickness may be specified.
2406-32	4-Digit modified	Sixth digit specifies position of maximum thickness, (%chord/10), and must be a 2, 3, 4, 5, or 6.
43006-65	5-Digit modified	Seventh digit specifies position of maximum thickness, (%chord/10), and must be a 2, 3, 4, 5, or 6.
16-212.25	1-Series	Second digit specifies location of minimum pressure, (%chord/10), and must be a 6, 8, or 9. Fractional thickness may be specified.
64-005 64-205 A=0.6 63A005 652A215 A=0.8 65,2A215 A=0.8	6-Series	Second digit specifies location of minimum pressure, (%chord/10), and must be a 3, 4, 5, or 6. The mean line parameter (A=xx) must be a decimal between 0.1 and 1.0 (Default is1.0). See Note 1.
3-30.0-2.5-40.1 A B C D	Supersonic	See Note 2. A - Section type: 1=Double Wedge 2=Circular Arc 3=Hexagonal B - Distance from leading edge to position of maximum thickness, % of chord. C - Maximum thickness, % of chord. D - For hexagonal sections, length of surface of constant thickness, % of chord.

Note 1. The program does not distinguish between a 64,2-220 and a 64-220 specification. The difference in coordinates between the two is negligible.

Note 2. All parameters can be expressed to 0.1%. The delimiter "-" must be used.

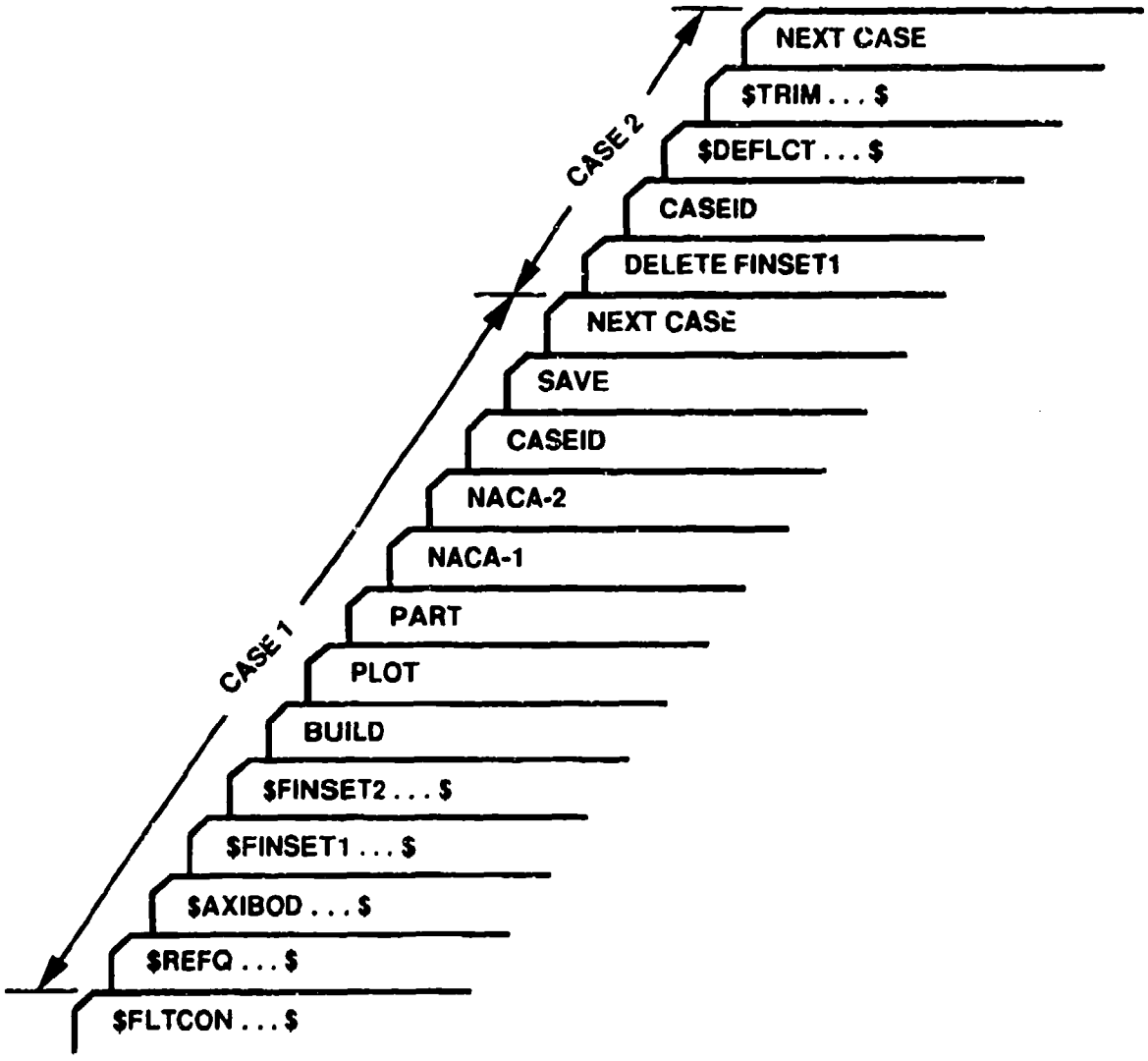

Figure 19 Typical "Stacked" Case Set-up

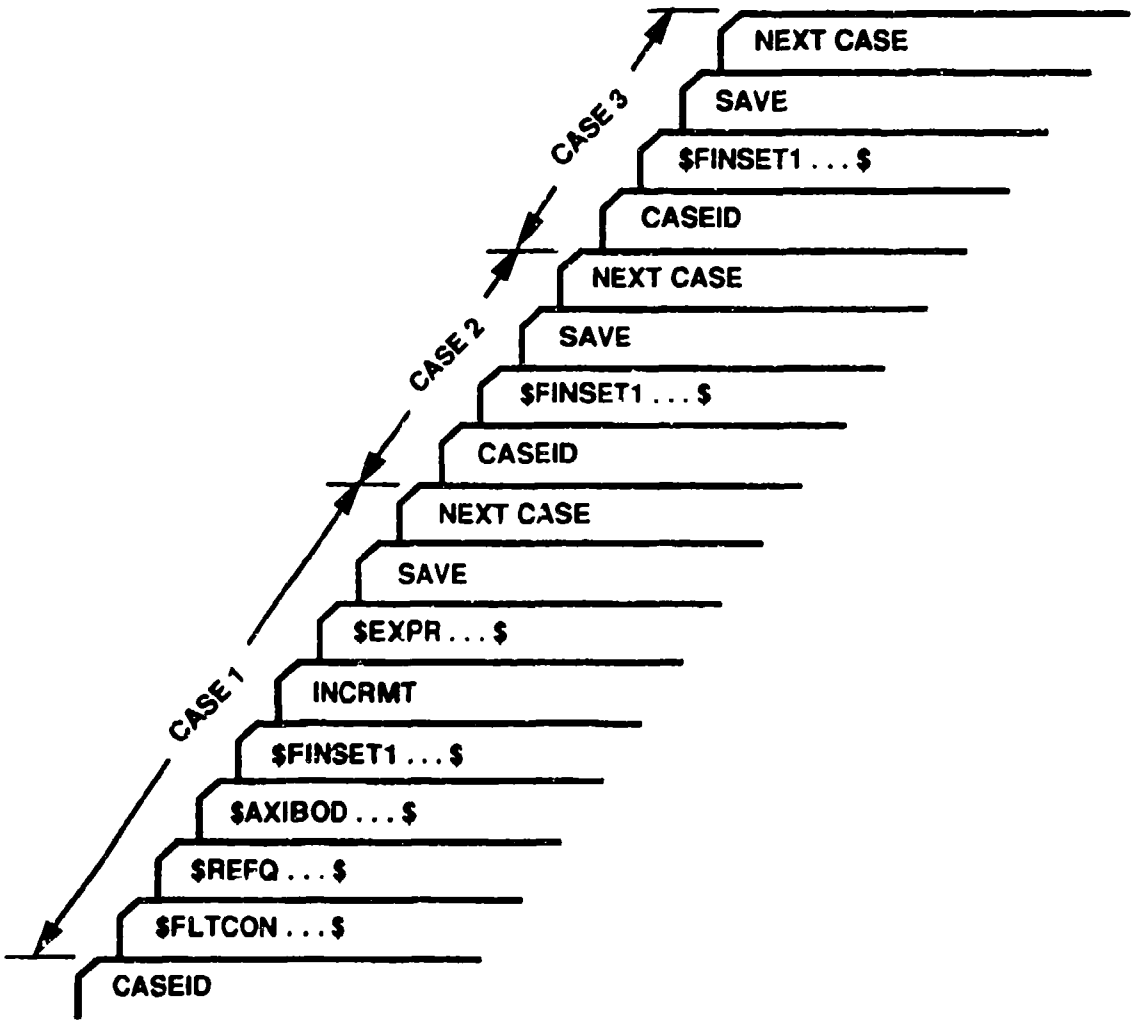

Figure 20 "Configuration Incrementing" Case Set-up

4.0 OUTPUT DESCRIPTION

This section describes the types of output available from the code. In most cases the available output is user selectable, that is, it is not normally provided and must be specifically requested using a specialized control card. This feature permits the user to tailor the code output to fit his particular application without extensive reprogramming. This allows him to find the output that he is interested in without having to wade through output that does not interest him.

The following four types of output are available from the code:

- Nominal output - This output is always provided by the code and consists of output from the input error checking module (CONERR), a listing of the inputs for each case, and the final aerodynamic results for the configuration.

- Partial output - This output details the configuration geometry and the intermediate aerodynamic calculations. Special control cards are available so that the user can select the quantity and types of output desired.

- External data files - This output permits the user to create external data files which can be used in post-processing programs, such as plotting or trajectory programs. Both fixed and user defined format data files can be created with the addition of simple control cards.

- Array dumps and extrapolation messages - This output permits the user to print internal data arrays (DUMP) or to investigate design chart extrapolations during the course of the case execution (PRINT EXTRAP).

The remainder of the section describes each of these output data. Examples of each output page are also included and were created from the example problems, described in the Appendix, which can be used as a model for setting up another, similar configuration or be used as a means to check the proper operation of the code.

4.1 Nominal Output

Without the use of any program options the code will provide three types of output. First, an analysis by the input error checking routine is provided. It lists all input cards provided by the user and identifies any input errors detected. Second, a listing of all input cards, grouped by case, are provided; included in this output is an error analysis from the major input

error routine MAJERR. Finally, the total configuration aerodynamics are provided in summary form; one page of aerodynamic output is supplied for each Mach number specified. The MAJERR results and the total configuration aerodynamics results are listed in succession for each case.

4.1.1 Input Error Checking

The purpose of the input error checking module is to provide single pass error checking of all inputs. If an error is detected, it is identified and an appropriate error message provided. The error messages are designed to be self-explanatory. In some cases, errors are automatically corrected by the routine, although the routine was not designed to be a comprehensive error correction utility.

The following errors are automatically corrected by the code:

- No terminating comma on a namelist input card
- No terminating "$" or "$END" on a namelist input ("&" on IBM systems)
- No terminating NEXT CASE for the case inputs for single case or last case inputs.

Errors detected by the error checking routine are considered either "FATAL" or "NON-FATAL", a "FATAL" error is one which will cause the code to terminate execution abnormally; examples of "FATAL" errors include incorrect spelling of any namelist name, incorrect spelling of any variable name, and any drastic input error in a namelist input, such as leaving out an equals sign in a constant definition. All "FATAL" errors are clearly identified on the output. A "NON-FATAL" error is one which will not cause the program to terminate execution; an example of a "NON-FATAL" error is leaving off the decimal point on numeric constants all Missile Datcom inputs are either REAL or LOGICAL regardless of the variable name assigned. "NON-FATAL" errors will not cause the code to stop execution, whereas, "FATAL" errors will cause the code to stop execution after input error checking has been completed.

An example output from CONERR is shown in Figure 21. This figure illustrates the array of input errors checked by CONERR. Several additional features of the output are as follows:

- All user defined input cards are assigned a sequential "line number". This serves to identify user inputs from the code generated inputs (all code-created input cards are not identified with a "line number"). This scheme also permits

the user to quickly identify those input cards in error so that efficient correction of input errors can be performed.

- All input cards are listed as input by the user. To the right of each input card is a listing of any errors encountered in processing that card. If no such error message appears then the input was interpreted as being correct.

- In many cases alphanumeric constants are available (see Table 3). Hence the user does not need to memorize a numeric scheme of "flags". Since some computers do not recognize alphanumeric constants as namelist constants, they are automatically converted by the code to their numeric equivalent. A message is printed to identify the substitutions performed. The example input in Figure 21 shows replacements for CONE and OGIVE.

In order to permit column independent inputs the code will automatically adjust some of the input cards to begin in columns 1 or 2. All control cards will be automatically shifted to start in column 1; all namelists which begin in column 1 will be shifted to column 2. If any input card cannot be shifted to conform to this scheme, an error message will be produced. As a general rule, column 80 of namelist inputs should be left blank so that the code can shift the card image, if necessary.

4.1.2 Listing of Case Input Data

Figure 22 shows the first page of outputs for a case without CONERR detected errors. Then Figure 23 shows the next page of output which lists all input cards for the case (down to the NEXT CASE control card). If the input for a case is from a previous case (through use of the SAVE control card) only the new case inputs are listed. All saved inputs are not repeated in subsequent case input summaries.

After the case data have been read, the data setup for the case is analyzed by the case major error checking module (MAJERR). The purpose of this second error checking is to insure that the data input, although syntax error free, properly defines a case to be run. Examples of errors detected in MAJERR include valid flight condition inputs, valid reference condition inputs, and that geometry has been defined. In most cases errors detected by MAJERR are corrected with assumed defaults. If any MAJERR error message is produced, the user should verify the "fix-up" taken by the code. In some cases a "fix-up" is not possible; an appropriate error message and a suggestion for correcting the error is provided. If a "fix-up" is not possible the case will not run.

4.1.3 Case Total Configuration Aerodynamic Output Summary

As shown in Figure 24, the total configuration aerodynamics are provided in compact form for easy review. The aerodynamics are summarized as a function of angle of attack (ALPHA) in the user specified system of units. the nomenclature is as follows:

CN	- Normal force coefficient
CM	- Pitching moment coefficient
CA	- Axial force coefficient
CY	- Side force coefficient
CLN	- Yawing moment coefficient
CLL	- Rolling moment coefficient
CNA	- Normal force coefficient derivative with ALPHA
CMA	- Pitching moment coefficient derivative with ALPHA
CYB	- Side force coefficient derivative with BETA
CLNB	- Yawing moment coefficient derivative with BETA
CLLB	- Rolling moment coefficient derivative with BETA
CL	- Lift coefficient
CD	- Drag coefficient
CL/CD	- Lift to drag ratio
XCP	- Center of pressure from the moment reference center divided by reference length

All coefficients are based upon the reference areas and lengths specified at the top of the output page. The derivatives CNA and CMA are computed by numeric differentiation of the CN and CM curves, respectively; precise derivatives are only obtained when the angle of attack range specified is narrow. The derivatives CYB, CLNB and CLLB are determined by perturbing the sideslip angle by one degree, recalculating the configuration forces and moments, and then differencing with the user specified orientation. Hence, the longitudinal and lateral derivatives will probably not be numerically identical for those conditions which should produce identical results if they were both calculated by the same method.

A significant decrease in computational time is realized when the calculation of lateral-directional derivatives are suppressed using the control card NO LAT. For these cases, the CYB, CLNB, and CLLB data fields are filled with blanks.

When selecting TRIM, the output is provided in a form similar to Figure 25. When running a trim case the derivatives due to ALPHA and BETA are not available. The panels which were deflected to trim the configuration are indicated by the "VARIED" citation next to them.

The format for the values of the numbers in the printed output has been assumed based on typical magnitudes for missile aerodynamic coefficients. In some cases, a user specified reference area and/or length will cause the results to underflow or overflow the format selected. For these cases the user should adjust his reference quantities by powers of ten to get the data to fit the format specified.

4.2 Partial Output

Partial output consists of geometry calculation details, intermediate aerodynamic results, or auxiliary data, such as pressure distributions. Each of these output types are printed through the addition of control cards input for each case. In all cases, partial output requested for one case is not automatically selected for subsequent cases, and the control cards must be re-input. This permits the user to be selective on the amount and types of output desired.

A special control card PART permits the user to request all geometric and aerodynamic partial output. Due to the amount of output produced, this option should be used sparingly or when details of the calculations are desired.

There is one geometry for which no partial output is obtained. This is when bodies with arbitrary cross sections are input.

The following paragraphs describe the output received when partial output is requested.

4.2.1 Geometric Partial Output

Details of the geometry are provided when the PART or PRINT GEOM control cards are included in the case inputs. Figure 26 shows the output created when the PRINT GEOM BODY control card is used. Detailed are the results of the geometric calculations for the body. Included are such items as planform area, surface (wetted) area, and the mold line contour.

If fins are present on the configuration, two types of fin geometry data are produced when PRINT GEOM FIN1 or PART is requested. As shown in Figure 27, the description of the panel airfoil section is provided. Following that, shown in Figure 28, is a summary of the major geometric characteristics of such planform; note that fin planform geometry data is given for one panel of each fin set, since it is assumed that each fin of a fin set is identical. If a panel is made up of multiple segments, the geometric data is provided by panel segment (each segment is assigned a number starting at the root). Total panel set of characteristics is also provided. This total panel data represents an equivalent straight-tapered panel, which is used for most of the aerodynamic

calculations. The thickness-to-chord ratio shown for each segment is that value at the segment root; for the total panel, it is an "effective" value.

If an airbreathing inlet is specified the output is similar to that in Figure 29. This output reflects the user input definition for the inlet design specified. It is provided if the PRINT GEOM INLET or PART control cards are included in the input case.

4.2.2 Aerodynamic Partial Output

The output on the configuration aerodynamics is most extensive when PRINT AERO or PART is specified. Output is created for the body and each fin set on the configuration. In addition, for any subsonic/transonic Mach number (less than 1.4) an analysis by the Airfoil Section Module is made, which involves a potential low analysis of the airfoil section using conformal mapping. If a configuration has inlets additional partial output is included to summarize the inlet external aerodynamics.

If base-jet plume interaction calculations are specified (BASE=.TRUE. in namelist AXIBOD), then there will be one or two separate pages of output. Figure 30 shows an example of the first page of output. This page will always be printed if BASE=.TRUE. The base pressure coefficient, axial force coefficient, and freestream pressure and temperature ratios are shown versus angle of attack. Also, the incremental forces and moments due to separation are shown versus angle of attack. If extrapolation of the base pressures and separation conditions database occurs, a warning message is printed explaning what input variable required extrapolation. A second page of output containing the boattail separation parameters will be printed if there are any fins on the missile boattail. The separation location aft of the nose and the Mach cone angle are shown versus angle of attack for each panel on the fin set. Figure 31 shows an example of this page. This output is provided if the PRINT AERO BODY or PART control card is input.

The protuberance partial output is printed if PRINT AERO BODY or PART is used. This output will only be shown if the namelist PROTUB is present in the input file. Figure 32 is an example of the protuberance output. Protuberance type, location, number, and axial force coefficient are listed for each protuberance set. The total axial force coefficient or zero lift drag coefficient is printed at the bottom of the page.

As shown in Figure 33, the body alone partial aerodynamic output for normal force lists the axial force contributors, potential normal force (CN-POTENTIAL), viscous normal forces (CN-VISCOUS), potential pitching moment (CM-POTENTIAL), viscous pitching moment (CM-VISCOUS), and the crossflow drag coefficient (CDC). The cross-flow drag proportionality factor

at subsonic and transonic speeds is also given for reference. These data are similar to that obtained for elliptical bodies.

Figure 34 details the fin normal force calculations by fin set. Each panel's contribution to the configuration normal force is described. The column titled CN-POTENTIAL is the potential contribution and the column titled CN-VISCOUS is the viscous contribution. Their sum is given in the column titled CN-TOTAL. CNAA is the nonlinear variation of normal force due to angle of attack and ALPHA EQUIV is the panel angle of attack due to its roll position on the body. Figure 35 illustrates the fin axial force contributors and Figure 36 presents an example of the fin pitching moment contributors.

The analysis by the Airfoil Section Module is provided in a format similar to Figure 37. If any Mach number specified produces supersonic flow on the airfoil surface, the message "CREST CRITICAL MACH NUMBER EXCEEDED" will be printed; approximation of the airfoil section data is then assumed. These fin aerodynamic increments are repeated for each fin set on the configuration. Note that the Airfoil Section Module assumes that the panels have sharp trailing edges. Any panel input with a non-sharp trailing edge will have its aerodynamic characteristics set as though the airfoil was "ideal". This assumption is approximate for preliminary design.

Figure 38 shows the aerodynamic output available when inlets are specified on the configuration. It is provided when PRINT AERO INLET or PART is specified in the case inputs. The aerodynamics summarized for inlets can include additive drag results if the user input the additive drag calculation flag. The maximum mass flow ratio is printed at the bottom of the page if the additive drag is calculated. If additive drag cannot be calculated, a warning message is printed.

After the aerodynamic details for each component of the configuration are output, the aerodynamic calculations for the synthesis of the complete configuration follows. For the example case, fin set 1 results would be followed by fin set 2 results for each of the following outputs:

- "FIN SET PRESENCE OF THE BODY" - This summarizes the aerodynamic incrementals of the most forward set of fins with the influence of the body. Figure 39 presents the example of this output. The left-most six columns include the effect of body-on-fin component interference. The right-most columns represent the contribution to each panel to configuration aerodynamics, and include the effect of body-on-fin interference, these values are, in effect, individual panel loads. The panel characteristic values included are "AEQn" (the panel equivalent (local) angle of attack) and

"CNn" (the panel normal force coefficient). The sign convention is as follows: a positive panel normal force, hence, equivalent angle of attack, produces a negative roll moment. Therefore, panels on the right side of the configuration will produce loads and angles of attack opposite in sign to those on the left side of the configuration even though they produce the same physical force loading.

- "BODY-FIN SET" - Aerodynamics for the body plus most forward set of fins configuration. It is produced through addition of the body alone and wing in presence of the body incrementals, described above. The results shown in Figure 40, include the component carryover factors K-W(B) (wing in presence of the body carryover due to angle of attack), K-B(W) (body in presence of the wing carryover due to angle of attack), KK-B(W) (body in presence of the wing carryover due to panel deflection), XCP-W(B) (wing in presence of the body carryover center of pressure), and XCP-B(W) (body in presence of the wing carryover center of pressure). This output is repeated for the body plus each additional aft fin set, if one exists on the configuration. This example includes two fin sets so the next page of partial output would look like Figure 41. If additional fin sets are present on the configuration additional pages are output with each one successively included.

- "CARRYOVER INTERFERENCE FACTORS" - This page of partial output summarizes the carryover factors listed in the paragraph above. These were included in the body plus fin set calculations. An example of this output is presented in Figure 42.

- "COMPLETE CONFIGURATION" - Complete configuration aerodynamics. This output is illustrated in Figure 24. The values are obtained by summing the body-wing and tail in the presence of the wing flow field data.

In addition to the output described above, more data is presented when the BUILD control card is used. Static aerodynamics are output for each configuration component. Body alone aerodynamics are shown in Figure 43. Fin alone aerodynamics are shown for each fin set present. Figure 44 shows the output for the first fin set. Static aerodynamics for a configuration with body plus most forward set of fins is given next. Figure 45 shows an example of this output. This output is repeated for configurations including the body plus each additional fin set present.

If the PRINT AERO BEND or PART control card is used, the code will compute and print panel bending moment coefficients for each fin set on a separate page. One page is shown in Figure 46. The sign convention is that assumed for the individual panel loads and equivalent angles of attack, noted above. The bending moment coefficients are based upon the reference area and longitudinal length given at the top of the page. The moments are referenced about the fin-body structure specified by the root chord span station.

Figure 47 illustrates the panel hinge moments coefficients computed when the control cards PRINT AERO HINGE or PART are used. The reference area and longitudinal reference length given at the top of the page are used. All moments are computed about the hinge line, which is defined using namelist DEFLCT.

If TRIM is specified, the user can selectively print the six untrimmed static aerodynamic tables used in the trim process. An example is shown in Figure 48. The code computes the six-component aerodynamics at ten deflection angles for each specified angle of attack, then interpolates for $C_m=0$. Note that this trim process can be used to create control authority data, effectively giving the user 10 deflection angles, 20 angles of attack, and 20 Mach numbers per input case.

4.2.3 Pressure Distribution Data

If the Mach number is supersonic ($M \geq 1.2$), the user has the option to print the surface pressure distributions over the body and fins. This option is selected only through the addition of the control card PRESSURES. Since three body alone supersonic methods are available (Van Dyke Hybrid, Second-Order Shock Expansion (SOSE), and Newtonian flow) the capability exists to output the pressure distribution data from any one of these methods. The method to be used in the calculation of the pressure data is controlled with the control cards SOSE and HYPER; if neither control card is input, the Van Dyke Hybrid method is selected. Because of the nature of the calculations, body alone pressures are printed for angles of attack less than or equal to 15 degrees when using the Hybrid or SOSE techniques.

The capability also exists for the user to output the pressure distribution data over fins at any Mach number greater than 1.05. This option is also controlled by the PRESSURES control card. Due to the nature of the method, only pressure distribution data at zero angle of attack is presently output.

Figures 49, 50, and 51 illustrate typical output produced when PRESSURES is specified. The format of Figure 49 is only available when SOSE is specified; all other body alone pressure methods produce output similar to

Figure 50 for bodies. Figure 51 is representative of fin pressure distribution output. Note that calculation of pressures is a time-consuming process; much higher computational times will be required.

All body pressure distribution data is based on a configuration that has body diameter of unity; that is, the configuration is expressed in calibers (or body diameters). The longitudinal stations at which pressure coefficient data is desired cannot be user specified; however, sufficient data is provided to permit accurate interpolation for most applications.

4.3 Dynamic Derivatives

As shown in Figure 52, the total configuration dynamic derivatives are provided in compact form for easy interpretation. The dynamic derivatives are summarized as a function of angle of attack in the user specified units. The coefficients provided are as follows:

CNQ	Normal force coefficient due to pitch rate
CNAD	Normal force coefficient due to acceleration in angle of attack (α)
CMQ	Pitching moment coefficient due to pitch rate
CMAD	Pitching moment coefficient due to acceleration in angle of attack (α)

Note: For body alone and body + fin set data CMQ and CMAD are presented as the sum CMQ+CMAD.

The dynamic derivatives are printed after all static coefficients and partial static aerodynamics are printed. If a BUILD or PART card is input, additional dynamic derivatives for partial configurations and/or configuration components are printed.

4 External Data Files

The code has the capability to be used in conjunction with other missile design tools, such as post-processing plotting programs or trajectory programs. Fixed format aerodynamic data is output as an external data file with the addition of the PLOT control card. Included in this data file are the six component forces and moments based upon the user specified reference quantities. In order to print component buildup data to the plot file the BUILD and PLOT control cards must be present in the case.

An option to create a user specified format data file is also available. The control cards WRITE and FORMAT have been designed for easy access to this capability.

4.5 Extrapolation Messages and Array Dumps

As shown in Figure 53, the extrapolation messages are summarized for all design charts which have been extrapolated during the execution of the case. Since many of the aerodynamic methods do not include design charts, but are either closed-form equations or complete theoretical methods, this option is most useful in the subsonic and transonic Mach regimes. Extrapolation messages are only provided if the control card PRINT EXTRAP appears in the case inputs. The data titled "ROUTINE TRACE-BACK" lists the subroutines called when the look-up was performed; "X" represents the independent variable and "Y" represents the dependent variable in the extrapolation.

When it is necessary to examine the values stored in internal data arrays the DUMP control card can be used. This control card causes the contents of the named data arrays to be printed in a form similar to Figure 54. Array dumps are provided for each Mach number of the input case, and represent the data block contents at aerodynamic calculation completion.

Note that all data arrays are initialized to a constant named "UNUSED", which is preset to a value of 1×10^{-30}. Hence, any array element which contains this constant was not changed during execution of the case (since it is highly unlikely that this constant will result from any calculation). This scheme permits rapid "tracking" of program calculation sequences while in "debug" mode.

```
                    THE USAF AUTOMATED MISSILE DATCOM * REV  4/91 *
                    AERODYNAMIC METHODS FOR MISSILE CONFIGURATIONS
                            CONERR - INPUT ERROR CHECKING

ERROR CODES - N* DENOTES THE NUMBER OF OCCURENCES OF EACH ERROR

A - UNKNOWN VARIABLE NAME

B - MISSING EQUAL SIGN FOLLOWING VARIABLE NAME

C - NON-ARRAY VARIABLE HAS AN ARRAY ELEMENT DESIGNATION - (N)

D - NON-ARRAY VARIABLE HAS MULTIPLE VALUES ASSIGNED

E - ASSIGNED VALUES EXCEED ARRAY DIMENSION

F - SYNTAX ERROR

   ******************************  INPUT DATA CARDS  ******************************

 1 *
 2 * INPUT ERROR CHECKING TEST CASES
 3 *
 4 CASEID CONERR ERROR CHECKING TEST CASE
 5                                                          ** BLANK CARD - IGNORED
 6  $FLTCON MACH=1.,$                                       ** ERROR **  1*A  0*B  0*C  0*D  0*E  0*F
                                                            ** FATAL ERROR **
 7  $REFQ SREF 1.,$                                         ** ERROR **  0*A  1*B  0*C  0*D  0*E  0*F
                                                            ** FATAL ERROR **
 8  $REFQ ROUGH(2)=0.,$                                     ** ERROR **  0*A  0*B  1*C  0*D  0*E  0*F
                                                            ** FATAL ERROR **
 9  $REFQ LATREF=1.,1.,$                                    ** ERROR **  0*A  0*B  0*C  1*D  0*E  0*F
                                                            ** FATAL ERROR **
10  $FLTCON MACH(21)=0.6,                                   ** ERROR **  0*A  0*B  0*C  0*D  1*E  0*F
                                                            ** FATAL ERROR **
11  $END
12  $FLTCON NMACH=1,$                                       ** ERROR **  0*A  0*B  0*C  0*D  0*E  1*F
13 BUILT                                                    ** ERROR ** UNKNOWN CONTROL CARD - IGNORED
14  $AXIBOD THOSE=CONE,$                                    ** SUBSTITUTING NUMERIC FOR NAME CONE
15  $AXIBD LNOSE=1.,$                                       ** ERROR ** UNKNOWN NAMELIST NAME
16  $AXIBOD THOSE=CONE,TAFT=OGIVE,$                         ** SUBSTITUTING NUMERIC FOR NAME CONE
                                                            ** SUBSTITUTING NUMERIC FOR NAME OGIVE
17 DUMP SSS                                                 ** ERROR **   1 INCORRECT ARRAY NAMES
18  $                                                       ** ERROR ** UNKNOWN NAMELIST NAME
19 NEXT CASE

FATAL ERROR ENCOUNTERED IN CONERR.  EXECUTION TERMINATED.
```

Figure 21 Input Error Checking Output

```
                                   THE USAF AUTOMATED MISSILE DATCOM * REV  4/91 *
                                   AERODYNAMIC METHODS FOR MISSILE CONFIGURATIONS
                                          CONERR - INPUT ERROR CHECKING

ERROR CODES - N* DENOTES THE NUMBER OF OCCURENCES OF EACH ERROR

A - UNKNOWN VARIABLE NAME

B - MISSING EQUAL SIGN FOLLOWING VARIABLE NAME

C - NON-ARRAY VARIABLE HAS AN ARRAY ELEMENT DESIGNATION - (N)

D - NON-ARRAY VARIABLE HAS MULTIPLE VALUES ASSIGNED

E - ASSIGNED VALUES EXCEED ARRAY DIMENSION

F - SYNTAX ERROR

   ******************************  INPUT DATA CARDS  ******************************

 1 CASEID PLANAR WING, CRUCIFORM PLUS TAIL CONFIGURATION
 2 $OBE
 3 DIM IN
 4 NO LAT
 5  $FLTCON NMACH=1.,MACH=2.36,REN=3.E6,
 6          NALPHA=8.,ALPHA=0.,4.,8.,12.,16.,20.,24.,28.,$
 7  $REFQ XCG=18.75,$
 8  $AXIBOD LNOSE=11.25,DNOSE=3.75,LCENTR=26.25,$
 9  $FINSET1 CHORD=6.96,0.,SSPAN=1.875,5.355,XLE=15.42,
10           SWEEP=0.,STA=1.,ZUPPER=2*0.02238,NPANEL=4.,
11           LMAXU=0.288,LER=2*0.015,LFLATU=0.428,PHIP=0.,$
12  $FINSET2 CHORD=5.585,2.792,SSPAN=1.875,6.260,XLE=31.915,
13           SWEEP=0.,STA=1.,ZUPPER=2*0.02238,NPANEL=4.,
14           LMAXU=0.288,LER=2*0.015,LFLATU=0.428,PHIP=0.,$
15 PART
16 BUILD
17 SAVE
18 NEXT CASE
```

Figure 22 Case Input Listing

```
                    THE USAF AUTOMATED MISSILE DATCOM * REV  4/91 *                    CASE   1
                    AERODYNAMIC METHODS FOR MISSILE CONFIGURATIONS                      PAGE   1
                                    CASE INPUTS

FOLLOWING ARE THE CARDS INPUT FOR THIS CASE

CASEID PLANAR WING, CRUCIFORM PLUS TAIL CONFIGURATION
BODE
DIM IN
NO LAT
 $FLTCON NMACH=1.,MACH=2.36,REN=3.E6,
         NALPHA=8.,ALPHA=0.,4.,8.,12.,16.,20.,24.,28.,$
 $REFQ XCG=18.75,$
 $AXIBOD LNOSE=11.25,DNOSE=3.75,LCENTR=26.25,$
 $FINSET1 CHORD=6.96,0.,SSPAN=1.875,5.355,XLE=15.42,
          SWEEP=0.,STA=1.,SUPPER=2*0.02238,NPANEL=4.,
          TMAXO=0.288,LER=2*0.015,LFLATO=0.428,PHIF=0.,$
 $FINSET2 CHORD=5.585,2.792,SSPAN=1.875,6.260,XLE=31.915,
          SWEEP=0.,STA=1.,SUPPER=2*0.02238,NPANEL=4.,
          TMAXO=0.288,LER=2*0.015,LFLATO=0.428,PHIF=0.,$
PART
BUILD
SAVE
NEXT CASE

* WARNING * THE REFERENCE AREA IS UNSPECIFIED, DEFAULT VALUE ASSUMED

* WARNING * THE REFERENCE LENGTH IS UNSPECIFIED, DEFAULT VALUE ASSUMED

* WARNING * A CENTER SECTION IS DEFINED BUT THE BASE DIAMETER IS NOT INPUT. CYLINDRICAL SECTION ASSUMED.

THE BOUNDARY LAYER IS ASSUMED TO BE TURBULENT OVER ALL COMPONENTS OF THE CONFIGURATION

THE INPUT UNITS ARE IN INCHES, THE SCALE FACTOR IS   1.0000
```

Figure 23 Example of Default Substitutions for Incomplete Case Inputs

THE USAF AUTOMATED MISSILE DATCOM * REV 4/91 *
AERODYNAMIC METHODS FOR MISSILE CONFIGURATIONS
PLANAR WING, CRUCIFORM PLUS TAIL CONFIGURATION
STATIC AERODYNAMICS FOR BODY-FIN SET 1 AND 2

CASE 1
PAGE 26

FLIGHT CONDITIONS								REFERENCE DIMENSIONS				
MACH NUMBER	ALTITUDE FT	VELOCITY FT/SEC	PRESSURE LB/IN**2	TEMPERATURE DEG K	REYNOLDS NUMBER 1/FT	SIDESLIP ANGLE DEG	ROLL ANGLE DEG	REF. AREA IN**2	REF. LENGTH LONG. IN	REF. LENGTH LAT. IN	MOMENT REF. CENTER LONG. IN	MOMENT REF. CENTER VERTICAL IN
2.36					3.000E+06	0.00	0.00	11.045	3.750	3.750	18.750	0.000

	LONGITUDINAL			LATERAL DIRECTIONAL			DERIVATIVES (PER DEGREE) LONGITUDINAL		DERIVATIVES (PER DEGREE) LATERAL DIRECTIONAL		
ALPHA	CN	CM	CA	CY	CLN	CLL	CNA	CMA	CYB	CLNB	CLLB
0.00	0.000	0.000	0.368	0.000	0.000	0.000	2.586E-01	-3.424E-01			
4.00	1.124	-1.472	0.368	0.000	0.000	0.000	3.032E-01	-3.934E-01			
8.00	2.427	-3.149	0.368	0.000	0.000	0.000	3.715E-01	-4.803E-01			
12.00	4.102	-5.327	0.369	0.000	0.000	0.000	4.316E-01	-5.783E-01			
16.00	5.880	-7.779	0.369	0.000	0.000	0.000	4.413E-01	-6.214E-01			
20.00	7.632	-10.298	0.370	0.000	0.000	0.000	4.193E-01	-6.175E-01			
24.00	9.235	-12.719	0.371	0.000	0.000	0.000	4.034E-01	-5.909E-01			
28.00	10.859	-15.026	0.373	0.000	0.000	0.000	4.084E-01	-5.624E-01			

ALPHA	CL	CD	CL/CD	X-C.P.
0.00	0.000	0.368	0.000	-1.324
4.00	1.095	0.445	2.460	-1.310
8.00	2.352	0.702	3.349	-1.298
12.00	3.935	1.213	3.244	-1.299
16.00	5.550	1.976	2.809	-1.323
20.00	7.045	2.958	2.382	-1.349
24.00	8.286	4.095	2.023	-1.377
28.00	9.413	5.427	1.734	-1.384

PANEL DEFLECTION ANGLES (DEGREES)

FIN SET	FIN 1	FIN 2	FIN 3	FIN 4
1	0.00	0.00	0.00	0.00
2	0.00	0.00	0.00	0.00

LINEAR DATA FOR BODY ALONE WAS GENERATED USING THE SECOND-ORDER SHOCK EXPANSION METHOD

Figure 24 Total Configuration Output Summary

THE USAF AUTOMATED MISSILE DATCOM * REV 4/91 *
AERODYNAMIC METHODS FOR MISSILE CONFIGURATIONS
PLANAR WING, CRUCIFORM PLUS TAIL CONFIGURATION
TRIMMED STATIC AERODYNAMIC COEFFICIENTS

CASE 1
PAGE 8

FLIGHT CONDITIONS								REFERENCE DIMENSIONS				
MACH NUMBER	ALTITUDE FT	VELOCITY FT/SEC	PRESSURE LB/IN**2	TEMPERATURE DEG R	REYNOLDS NUMBER 1/FT	SIDESLIP ANGLE DEG	ROLL ANGLE DEG	REF. AREA IN**2	REF. LENGTH LONG. IN	REF. LENGTH LAT. IN	MOMENT REF. CENTER LONG. IN	MOMENT REF. CENTER VERTICAL IN
0.60					1.000E+06	0.00	0.00	11.045	3.750	3.750	18.750	0.000

ALPHA	DELTA	CL	CD	CN	CA	CY	CLN	CLL
0.00	0.0000	0.0000	0.2682	0.0000	0.2682	0.0000	0.0000	0.0000
8.00	16.9428	3.8491	1.5803	4.0316	1.0292	0.0000	0.0000	0.0000
16.00	*NT*	*NT*	*NT*	*NT*	*NT*	*NT*	*NT*	*NT*

PANELS FROM FIN SET 1 WERE DEFLECTED OVER THE RANGE -25.0000 TO 20.0000 DEG.
PANEL 1 WAS FIXED
PANEL 2 WAS VARIED
PANEL 3 WAS FIXED
PANEL 4 WAS VARIED

NOTE - *NT* PRINTED WHEN NO TRIM POINT COULD BE FOUND

Figure 25 Trimmed Output Summary

THE USAF AUTOMATED MISSILE DATCOM * REV 4/91 * CASE 1
AERODYNAMIC METHODS FOR MISSILE CONFIGURATIONS PAGE 2
PLANAR WING, CRUCIFORM PLUS TAIL CONFIGURATION
AXISYMMETRIC BODY DEFINITION

	---- NOSE ----	---- CENTERBODY ----	---- AFT BODY ----	---- TOTAL -----	
SHAPE	OGIVE	CYLINDER	--------		
LENGTH	11.2500	26.2500	0.0000	37.5000	IN
FINENESS RATIO	3.0000	7.0000	0.0000	10.0000	
PLANFORM AREA	28.2799	98.4376	0.0000	126.7175	IN**2
AREA CENTROID	7.0157	24.3750	0.0000	20.5008	IN FROM NOSE TIP
WETTED AREA	89.8180	309.2506	0.0000	399.0687	IN**2
VOLUME	66.7887	289.9221	0.0000	356.7109	IN**3
VOLUME CENTROID	7.7135	24.3750	0.0000	21.2554	IN FROM NOSE TIP

MOLD LINE CONTOUR

LONGITUDINAL STATIONS	0.0000	1.1250	2.2500	3.3750	4.5000	5.6250	6.7500	7.8750	9.0000	10.1250
	11.2500	13.8750	16.5000	19.1250	21.7500	24.3750	27.0000	29.6250	32.2500	34.8750
	37.5000*									
BODY RADII	0.0000	0.3644	0.6871	0.9693	1.2119	1.4159	1.5819	1.7104	1.8020	1.8568
	1.8750	1.8750	1.8750	1.8750	1.8750	1.8750	1.8750	1.8750	1.8750	1.8750
	1.8750*									

NOTE - * INDICATES SLOPE DISCONTINUOUS POINTS

Figure 26 Body Geometry Output

THE USAF AUTOMATED MISSILE DATCOM * REV 4/91 *
AERODYNAMIC METHODS FOR MISSILE CONFIGURATIONS
PLANAR WING, CRUCIFORM PLUS TAIL CONFIGURATION
FIN SET NUMBER 1 AIRFOIL SECTION

NACA 8-3-35.9-04.5-28.5

UPPER ABSCISSA	UPPER ORDINATE	LOWER ABSCISSA	LOWER ORDINATE	X-FRACTION CHORD	MEAN LINE	THICKNESS
0.00000	0.00000	0.00000	0.00000	0.00000	0.00000	0.00000
0.00100	0.00006	0.00100	-0.00006	0.00100	0.00000	0.00013
0.00200	0.00013	0.00200	-0.00013	0.00200	0.00000	0.00025
0.00300	0.00019	0.00300	-0.00019	0.00300	0.00000	0.00038
0.00400	0.00025	0.00400	-0.00025	0.00400	0.00000	0.00050
0.00500	0.00031	0.00500	-0.00031	0.00500	0.00000	0.00063
0.00600	0.00038	0.00600	-0.00038	0.00600	0.00000	0.00075
0.00800	0.00050	0.00800	-0.00050	0.00800	0.00000	0.00100
0.01000	0.00063	0.01000	-0.00063	0.01000	0.00000	0.00125
0.02000	0.00125	0.02000	-0.00125	0.02000	0.00000	0.00251
0.03000	0.00188	0.03000	-0.00188	0.03000	0.00000	0.00376
0.04000	0.00251	0.04000	-0.00251	0.04000	0.00000	0.00501
0.05000	0.00313	0.05000	-0.00313	0.05000	0.00000	0.00627
0.06000	0.00376	0.06000	-0.00376	0.06000	0.00000	0.00752
0.08000	0.00501	0.08000	-0.00501	0.08000	0.00000	0.01003
0.10000	0.00627	0.10000	-0.00627	0.10000	0.00000	0.01253
0.12000	0.00752	0.12000	-0.00752	0.12000	0.00000	0.01504
0.14000	0.00877	0.14000	-0.00877	0.14000	0.00000	0.01755
0.16000	0.01003	0.16000	-0.01003	0.16000	0.00000	0.02006
0.18000	0.01128	0.18000	-0.01128	0.18000	0.00000	0.02256
0.20000	0.01253	0.20000	-0.01253	0.20000	0.00000	0.02507
0.40000	0.02250	0.40000	-0.02250	0.40000	0.00000	0.04500
0.42000	0.02250	0.42000	-0.02250	0.42000	0.00000	0.04500
0.45000	0.02250	0.45000	-0.02250	0.45000	0.00000	0.04500
0.50000	0.02250	0.50000	-0.02250	0.50000	0.00000	0.04500
0.55000	0.02250	0.55000	-0.02250	0.55000	0.00000	0.04500
0.60000	0.02250	0.60000	-0.02250	0.60000	0.00000	0.04500
0.65000	0.02212	0.65000	-0.02212	0.65000	0.00000	0.04424
0.70000	0.01896	0.70000	-0.01896	0.70000	0.00000	0.03792
0.75000	0.01580	0.75000	-0.01580	0.75000	0.00000	0.03160
0.80000	0.01264	0.80000	-0.01264	0.80000	0.00000	0.02528
0.82000	0.01138	0.82000	-0.01138	0.82000	0.00000	0.02275
0.84000	0.01011	0.84000	-0.01011	0.84000	0.00000	0.02022
0.86000	0.00885	0.86000	-0.00885	0.86000	0.00000	0.01770
0.88000	0.00758	0.88000	-0.00758	0.88000	0.00000	0.01517
0.90000	0.00632	0.90000	-0.00632	0.90000	0.00000	0.01264
0.92000	0.00506	0.92000	-0.00506	0.92000	0.00000	0.01011
0.94000	0.00379	0.94000	-0.00379	0.94000	0.00000	0.00758
0.96000	0.00253	0.96000	-0.00253	0.96000	0.00000	0.00506
0.98000	0.00126	0.98000	-0.00126	0.98000	0.00000	0.00253
1.00000	0.00000	1.00000	0.00000	1.00000	0.00000	0.00000

Figure 27 Airfoil Geometry Output

THE USAF AUTOMATED MISSILE DATCOM * REV 4/91 *
AERODYNAMIC METHODS FOR MISSILE CONFIGURATIONS
PLANAR WING, CRUCIFORM PLUS TAIL CONFIGURATION
GEOMETRIC RESULTS FOR FIN SETS

CASE 1
PAGE 5

FIN SET NUMBER 1
(DATA FOR ONE PANEL ONLY)

SEGMENT NUMBER	PLANFORM AREA IN**2	TAPER RATIO	ASPECT RATIO	LEADING EDGE SWEEP DEG	TRAILING EDGE SWEEP DEG	MEAN AERODYNAMIC CHORD IN	LEADING M.A.C. POSITION IN	LATERAL M.A.C. POSITION IN	THICKNESS TO CHORD RATIO
1	12.11040	0.0000	1.00000	63.43495	0.00000	4.6400	2.3200	3.0350	0.04500
TOTAL	12.11040	0.0000	1.00000	63.43495	0.00000	4.6400	2.3200	3.0350	0.04500

FIN SET NUMBER 2
(DATA FOR ONE PANEL ONLY)

SEGMENT NUMBER	PLANFORM AREA IN**2	TAPER RATIO	ASPECT RATIO	LEADING EDGE SWEEP DEG	TRAILING EDGE SWEEP DEG	MEAN AERODYNAMIC CHORD IN	LEADING M.A.C. POSITION IN	LATERAL M.A.C. POSITION IN	THICKNESS TO CHORD RATIO
1	18.36658	0.4999	1.04691	32.49486	0.00000	4.3437	1.2413	3.8238	0.04500
TOTAL	18.36658	0.4999	1.04691	32.49486	0.00000	4.3437	1.2413	3.8238	0.04500

Figure 28 Fin Geometry Output

THE USAF AUTOMATED MISSILE DATCOM * REV 4/91 *
AERODYNAMIC METHODS FOR MISSILE CONFIGURATIONS
2D SIDE INLET PHI=90,270
INLET GEOMETRY

INLET IS A SIDE MOUNTED TWO-DIMENSIONAL TYPE

THE INLETS ARE OPEN

EXTERNAL COMPRESSION RAMP ANGLE (DEG) = 12.22

NUMBER OF INLETS = 2

INLET ANGULAR ROLL POSITIONS FROM TOP VERTICAL CENTER (DEG)
(SAME CONVENTION AS FIN ROLL POSITIONS)
90.0 270.0

LONGITUDINAL DISTANCE FROM MISSILE NOSE TIP TO
INLET LEADING EDGE = 35.69

INLET POSITIONS RELATIVE TO THE LEADING EDGE

POSITION	LONGITUDINAL	WIDTH	HEIGHT
TOP LIP LEADING EDGE	0.000	3.600	0.000
COWL LIP LEADING EDGE	8.694	4.064	4.073
MID BODY START	13.335	4.064	4.864
BOATTAIL START	56.071	4.064	4.064
BOATTAIL END	70.993	2.286	2.286

LONGITUDINAL DISTANCE FROM INLET LEADING EDGE TO
DIVERTER LEADING EDGE = 7.75

DIVERTER LENGTH = 12.45

HEIGHT OF DIVERTER LEADING EDGE = 0.25

Figure 29 Inlet Geometry Output

THE USAF AUTOMATED MISSILE DATCOM * REV 4/91 * CASE 1
AERODYNAMIC METHODS FOR MISSILE CONFIGURATIONS PAGE 6
TEST CASE FOR BASPRS IMPLEMENTATION
BASE-JET PLUME INTERACTION FLOW PARAMETERS

FLIGHT CONDITIONS								REFERENCE DIMENSIONS				
MACH NUMBER	ALTITUDE FT	VELOCITY FT/SEC	PRESSURE LB/IN**2	TEMPERATURE DEG R	REYNOLDS NUMBER 1/FT	SIDESLIP ANGLE DEG	ROLL ANGLE DEG	REF. AREA IN**2	REF. LENGTH LONG. IN	REF. LENGTH LAT. IN	MOMENT REF. CENTER LONG. IN	MOMENT REF. CENTER VERTICAL IN
2.00	0.00	2232.53	1.470E+01	5186.70	1.414E+07	0.00	0.00	19.635	5.000	5.000	15.000	0.000

WARNING EXTRAPOLATION WILL BE REQUIRED FOR THE FOLLOWING CONDITIONS:

* ANGLE OF ATTACK LESS THAN 0.0

	BASE FLOW PARAMETERS				INCREMENTAL FORCE AND MOMENT DATA		
ALPHA	CP-BASE	CA-BASE	TBASE/TINF	PBASE/PINF	DELTA CN	DELTA CM	DELTA CA
-2.00	0.0926	-0.0073	4.0996	1.2592	-0.0023	0.0035	-0.0218
0.00	0.0926	-0.0073	4.0996	1.2592	0.0000	0.0000	-0.0218
2.00	0.0926	-0.0073	4.0996	1.2592	0.0023	-0.0035	-0.0218

Figure 30 Base-Jet Plume Interaction Output - Page 1

THE USAF AUTOMATED MISSILE DATCOM * REV 4/91 *
AERODYNAMIC METHODS FOR MISSILE CONFIGURATIONS
TEST CASE FOR BASPRS IMPLEMENTATION
BASE-JET PLUME INTERACTION FLOW PARAMETERS

CASE 1
PAGE 7

FLIGHT CONDITIONS								REFERENCE DIMENSIONS				
MACH NUMBER	ALTITUDE FT	VELOCITY FT/SEC	PRESSURE LB/IN**2	TEMPERATURE DEG R	REYNOLDS NUMBER 1/FT	SIDESLIP ANGLE DEG	ROLL ANGLE DEG	REF. AREA IN**2	REF. LENGTH LONG. IN	REF. LENGTH LAT. IN	MOMENT REF. CENTER LONG. IN	MOMENT REF. CENTER VERTICAL IN
2.00	0.00	2232.53	1.470E+01	5186.70	1.414E+07	0.00	0.00	19.635	5.000	5.000	15.000	0.000

BOATTAIL SEPARATION PARAMETERS

	PANEL 1 PHI= 45.0		PANEL 2 PHI=135.0		PANEL 3 PHI=225.0		PANEL 4 PHI=315.0	
ALPHA	X-SEP (FT)	MACH CONE ANGLE	X-SEP (FT)	MACH CONE ANGLE	X-SEP (FT)	MACH CONE ANGLE	X-SEP (FT)	MACH CONE ANGLE
-2.00	1.881	28.586	1.857	31.414	1.857	31.414	1.881	28.586
0.00	1.867	30.000	1.867	30.000	1.867	30.000	1.867	30.000
2.00	1.854	31.414	1.877	28.586	1.877	28.586	1.854	31.414

Figure 31 Base-Jet Plume Interaction Output - Page 2

THE USAF AUTOMATED MISSILE DATCOM * REV 4/91 * CASE 1
AERODYNAMIC METHODS FOR MISSILE CONFIGURATIONS PAGE 2
PROTUBERANCE DRAG EXAMPLE CASE
PROTUBERANCE OUTPUT

FLIGHT CONDITIONS								REFERENCE DIMENSIONS				
MACH NUMBER	ALTITUDE FT	VELOCITY FT/SEC	PRESSURE LB/IN**2	TEMPERATURE DEG R	REYNOLDS NUMBER 1/FT	SIDESLIP ANGLE DEG	ROLL ANGLE DEG	REF. AREA IN**2	REF. LENGTH LONG. IN	REF. LENGTH LAT. IN	MOMENT REF. CENTER LONG. IN	MOMENT REF. CENTER VERTICAL IN
0.40	0.00				3.000E+06	0.00	0.00	113.097	12.000	12.000	39.000	0.000

PROTUBERANCE AXIAL FORCE COEFFICIENT IS CALCULATED AT ZERO ANGLE OF ATTACK AND ASSUMED TO REMAIN CONSTANT OVER ALL ANGLES OF ATTACK. PROTUBERANCES ARE CONSIDERED TO BE PART OF THE BODY WHEN CALCULATING TOTAL BODY AXIAL FORCE. THEREFORE, PROTUBERANCE AXIAL FORCE INCREMENT IS INCLUDED IN THE TOTAL CONFIGURATION AERODYNAMICS SECTION.

PROTUBERANCE CALCULATIONS

NUMBER	TYPE	LONGITUDINAL LOCATION (IN)	NUMBER AT LOCATION	INDIVIDUAL CA	TOTAL CA
1	FAIRING	14.000	2	0.0027	0.0053
2	VERTICAL CYLINDER	22.000	4	0.0018	0.0073
3	LAUNCH SHOE	39.000	2	0.0034	0.0068
4	FLAT PLATE OR BLOCK	56.000	1	0.0012	0.0012

TOTAL CA DUE TO PROTUBERANCES = 0.0206

Figure 32 Protuberance Output

THE USAF AUTOMATED MISSILE DATCOM * REV 4/91 *
AERODYNAMIC METHODS FOR MISSILE CONFIGURATIONS
PLANAR WING, CRUCIFORM PLUS TAIL CONFIGURATION
BODY ALONE PARTIAL OUTPUT

CASE 1
PAGE 6

FLIGHT CONDITIONS								REFERENCE DIMENSIONS				
MACH NUMBER	ALTITUDE FT	VELOCITY FT/SEC	PRESSURE LB/IN**2	TEMPERATURE DEG R	REYNOLDS NUMBER 1/FT	SIDESLIP ANGLE DEG	ROLL ANGLE DEG	REF. AREA IN**2	REF. LENGTH LONG. IN	REF. LENGTH LAT. IN	MOMENT REF. CENTER LONG. IN	MOMENT REF. CENTER VERTICAL IN
2.36					3.000E+06	0.00	0.00	11.045	3.750	3.750	18.750	0.000

ALPHA	CA-FRICTION	CA-PRESSURE/WAVE	CA-BASE	CA-ALPHA
0.000	0.08447	0.10301	0.12540	0.00000
4.000	0.08459	0.10299	0.12540	0.00000
8.000	0.08493	0.10293	0.12540	0.00000
12.000	0.08551	0.10284	0.12540	0.00000
16.000	0.08633	0.10271	0.12540	0.00000
20.000	0.08740	0.10255	0.12540	0.00000
24.000	0.08871	0.10235	0.12540	0.00000
28.000	0.09028	0.10213	0.12540	0.00000

NOTE - THE BASE DRAG INCREMENT IS NOT INCLUDED IN THE AXIAL FORCE CALCULATIONS

CROSS FLOW DRAG PROPORTIONALITY FACTOR = 1.00000

ALPHA	CN-POTENTIAL	CN-VISCOUS	CM-POTENTIAL	CM-VISCOUS	CDC
0.000	0.0000	0.0000	0.0000	0.0000	0.2800
4.000	0.2213	0.0248	0.5822	-0.0116	0.4446
8.000	0.4375	0.1809	1.1510	-0.0845	0.8140
12.000	0.6436	0.6578	1.6932	-0.3071	1.3264
16.000	0.8350	1.3075	2.1965	-0.6105	1.5000
20.000	1.0072	2.0045	2.6497	-0.9359	1.4935
24.000	1.1566	2.6081	3.0427	-1.2177	1.3741
29.000	1.2800	3.3299	3.3671	-1.5547	1.3168

Figure 33 Body Alone Aerodynamic Partial Output

THE USAF AUTOMATED MISSILE DATCOM * REV 4/91 * CASE 1
AERODYNAMIC METHODS FOR MISSILE CONFIGURATIONS PAGE 7
PLANAR WING, CRUCIFORM PLUS TAIL CONFIGURATION
FIN SET 1 CN PARTIAL OUTPUT

FLIGHT CONDITIONS								REFERENCE DIMENSIONS				
MACH NUMBER	ALTITUDE FT	VELOCITY FT/SEC	PRESSURE LB/IN**2	TEMPERATURE DEG R	REYNOLDS NUMBER 1/FT	SIDESLIP ANGLE DEG	ROLL ANGLE DEG	REF. AREA IN**2	REF. LENGTH LONG. IN	REF. LENGTH LAT. IN	MOMENT REF. LONG. IN	CENTER VERTICAL IN
2.36					3.000E+06	0.00	0.00	11.045	3.750	3.750	18.750	0.000

POTENTIAL NORMAL FORCE SLOPE AT ALPHA ZERO (1 PANEL), CNA = 0.03186/DEG

PANEL NO.	ALPHA TOTAL DEG	FIN PHI DEG	ALPHA EQUIV DEG	CNAA	CN POTENTIAL	CN VISCOUS	CN TOTAL
1	0.000	0.000	0.000	1.75439	0.00000	0.00000	0.00000
2	0.000	90.000	0.000	1.75439	0.00000	0.00000	0.00000
3	0.000	180.000	0.000	1.75439	0.00000	0.00000	0.00000
4	0.000	270.000	0.000	1.75439	0.00000	0.00000	0.00000
SET					0.00000	0.00000	0.00000
1	4.000	0.000	0.000	1.75439	0.00000	0.00000	0.00000
2	4.000	90.000	4.000	1.56610	0.12703	0.00762	0.13465
3	4.000	180.000	0.000	1.75439	0.00000	0.00000	0.00000
4	4.000	270.000	4.000	1.56610	0.12703	0.00762	0.13465
SET					0.25406	0.01524	0.26930
1	8.000	0.000	0.000	1.75439	0.00000	0.00000	0.00000
2	8.000	90.000	8.000	1.38431	0.25159	0.02681	0.27840
3	8.000	180.000	0.000	1.75439	0.00000	0.00000	0.00000
4	8.000	270.000	8.000	1.38431	0.25159	0.02681	0.27840
SET					0.50318	0.05363	0.55680
1	12.000	0.000	0.000	1.75439	0.00000	0.00000	0.00000
2	12.000	90.000	12.000	1.21073	0.37125	0.05234	0.42359
3	12.000	180.000	0.000	1.75439	0.00000	0.00000	0.00000
4	12.000	270.000	12.000	1.21073	0.37125	0.05234	0.42359
SET					0.74250	0.10467	0.84717

Figure 34 Fin Normal Force Partial Output

THE USAF AUTOMATED MISSILE DATCOM * REV 4/91 *
AERODYNAMIC METHODS FOR MISSILE CONFIGURATIONS
PLANAR WING, CRUCIFORM PLUS TAIL CONFIGURATION
FIN SET 1 CA PARTIAL OUTPUT

CASE 1
PAGE 8

FLIGHT CONDITIONS								REFERENCE DIMENSIONS				
MACH NUMBER	ALTITUDE FT	VELOCITY FT/SEC	PRESSURE LB/IN**2	TEMPERATURE DEG R	REYNOLDS NUMBER 1/FT	SIDESLIP ANGLE DEG	ROLL ANGLE DEG	REF. AREA IN**2	REF. LENGTH LONG. IN	REF. LENGTH LAT. IN	MOMENT REF. CENTER LONG. IN	MOMENT REF. CENTER VERTICAL IN
2.36					3.000E+06	0.00	0.00	11.045	3.750	3.750	18.750	0.000

SINGLE FIN PANEL ZERO-LIFT AXIAL FORCE COMPONENTS

SKIN FRICTION	0.00755
SUBSONIC PRESSURE	0.00000
TRANSONIC WAVE	0.00000
SUPERSONIC WAVE	0.00598
LEADING EDGE	0.00108
TRAILING EDGE	0.00000
TOTAL CAO	0.01461

FIN AXIAL FORCE DUE TO ANGLE OF ATTACK

ALPHA DEG	CA DUE TO ALPHA	CA-TOTAL (4 FINS)
0.000	0.00000	0.05845
4.000	0.00000	0.05845
8.000	0.00000	0.05845
12.000	0.00000	0.05845
16.000	0.00000	0.05845
20.000	0.00000	0.05845
24.000	0.00000	0.05845
28.000	0.00000	0.05845

Figure 35 Fin Axial Force Partial Output

THE USAF AUTOMATED MISSILE DATCOM * REV 4/91 *
AERODYNAMIC METHODS FOR MISSILE CONFIGURATIONS
PLANAR WING, CRUCIFORM PLUS TAIL CONFIGURATION
FIN SET 1 CM PARTIAL OUTPUT

CASE 1
PAGE 9

FLIGHT CONDITIONS								REFERENCE DIMENSIONS				
MACH NUMBER	ALTITUDE FT	VELOCITY FT/SEC	PRESSURE LB/IN**2	TEMPERATURE DEG R	REYNOLDS NUMBER 1/FT	SIDESLIP ANGLE DEG	ROLL ANGLE DEG	REF. AREA IN**2	REF. LENGTH LONG. IN	REF. LENGTH LAT. IN	MOMENT REF. CENTER LONG. IN	MOMENT REF. CENTER VERTICAL IN
2.36					3.000E+06	0.00	0.00	11.045	3.750	3.750	18.750	0.000

CENTER OF PRESSURE FOR LINEAR CM = -0.35552 (CALIBERS FROM C.G.)
CENTER OF PRESSURE FOR NON-LINEAR CM = -0.34933 (CALIBERS FROM C.G.)

ALPHA DEG.	CM LINEAR	CM NON-LINEAR	CM TOTAL
0.00000	0.00000	0.00000	0.00000
4.00000	-0.09032	-0.00532	-0.09565
8.00000	-0.17889	-0.01873	-0.19762
12.00000	-0.25397	-0.03657	-0.30054
16.00000	-0.34392	-0.05663	-0.40055
20.00000	-0.41717	-0.07651	-0.49368
24.00000	-0.48230	-0.09492	-0.57722
28.00000	-0.53805	-0.11338	-0.65142

Figure 36 Fin Pitching Moment Partial Output

```
THE USAF AUTOMATED MISSILE DATCOM * REV  4/91 *                    CASE  1
AERODYNAMIC METHODS FOR MISSILE CONFIGURATIONS                     PAGE  6
PLANAR WING, CRUCIFORM PLUS TAIL CONFIGURATION
FIN SET 1 SECTION AERODYNAMICS

                IDEAL ANGLE OF ATTACK =   0.00000 DEG.

              ZERO LIFT ANGLE OF ATTACK =   0.00000 DEG.

                IDEAL LIFT COEFFICIENT =   0.00000

ZERO LIFT PITCHING MOMENT COEFFICIENT =   0.00000

           MACH ZERO LIFT-CURVE-SLOPE =   0.09275 /DEG.

                 LEADING EDGE RADIUS =   0.00323 FRACTION CHORD

           MAXIMUM AIRFOIL THICKNESS =   0.04500 FRACTION CHORD

                            DELTA-Y =   0.36664 PERCENT CHORD


      MACH= 0.6000 LIFT-CURVE-SLOPE =   0.11536 /DEG.      XAC =   0.28302      MAX. LIFT =   0.73826
```

Figure 37 Airfoil Section Aerodynamic Partial Output

THE USAF AUTOMATED MISSILE DATCOM * REV 4/91 *
AERODYNAMIC METHODS FOR MISSILE CONFIGURATIONS
2D SIDE INLET PHI=90,270
INLET AERODYNAMIC INCREMENTALS

CASE 1
PAGE 9

FLIGHT CONDITIONS								REFERENCE DIMENSIONS				
MACH NUMBER	ALTITUDE	VELOCITY	PRESSURE	TEMPERATURE	REYNOLDS NUMBER	SIDESLIP ANGLE	ROLL ANGLE	REF. AREA	REF. LENGTH LONG.	REF. LENGTH LAT.	MOMENT REF. CENTER LONG.	MOMENT REF. CENTER VERTICAL
	M	M/SEC	NT/CM**2	DEG K	1/ M	DEG	DEG	CM**2	CM	CM	CM	CM
2.50	0.00	850.81	4.758E-02	2881.50	5.796E+07	0.00	0.00	45.604	7.620	7.620	53.340	0.000

ALPHA	CN-INLET	CM-INLET	CA-INLET	CA-ADD	CY-INLET	CLN-INLET
-4.00	-1.0229	-0.9977	0.0796	0.0655	0.0000	0.0000
0.00	0.0000	0.0000	0.0796	0.0655	0.0000	0.0000
4.00	1.0229	0.9977	0.0796	0.0655	0.0000	0.0000
8.00	2.2836	1.3925	0.0796	0.0655	0.0000	0.0000

NOTE; CA-ADD IS INLET ADDITIVE DRAG COEFFICIENT FOR AN INLET MASS FLOW RATIO OF 0.75

NOTE; THE MAXIMUM MASS FLOW RATIO FOR THIS INLET AT THESE FLIGHT CONDITIONS IS 0.77

Figure 38 Inlet Aerodynamic Partial Output

THE USAF AUTOMATED MISSILE DATCOM * REV 4/91 *
AERODYNAMIC METHODS FOR MISSILE CONFIGURATIONS
PLANAR WING, CRUCIFORM PLUS TAIL CONFIGURATION
AERODYNAMIC FORCE AND MOMENT SYNTHESIS

CASE 1
PAGE 13

FLIGHT CONDITIONS								REFERENCE DIMENSIONS				
MACH NUMBER	ALTITUDE FT	VELOCITY FT/SEC	PRESSURE LB/IN**2	TEMPERATURE DEG R	REYNOLDS NUMBER 1/FT	SIDESLIP ANGLE DEG	ROLL ANGLE DEG	REF. AREA IN**2	REF. LENGTH LONG. IN	REF. LENGTH LAT. IN	MOMENT REF. CENTER LONG. IN	MOMENT REF. CENTER VERTICAL IN
2.36					3.000E+06	0.00	0.00	11.045	3.750	3.750	18.750	0.000

FIN SET 1 IN PRESENCE OF THE BODY							PANEL CHARACTERISTICS		
ANGLE OF ATTACK, DEG.	CN	CM	CA	CY	CLN	CLL	PANEL NUMBER	AEQ (IN PANEL AXIS SYS.) DEG.	CN
0.0000	0.0000	0.0000	0.0584	0.0000	0.0000	0.0000	1	0.0000	0.0000
							2	0.0000	0.0000
							3	0.0000	0.0000
							4	0.0000	0.0000
4.0000	0.3541	-0.1259	0.0584	0.0000	0.0000	0.0000	1	0.0000	0.0000
							2	5.1963	0.1770
							3	0.0000	0.0000
							4	-5.1963	-0.1770
8.0000	0.7285	-0.2590	0.0584	0.0000	0.0000	0.0000	1	0.0000	0.0000
							2	10.3582	0.3642
							3	0.0000	0.0000
							4	-10.3582	-0.3642
12.0000	1.0919	-0.3882	0.0584	0.0000	0.0000	0.0000	1	0.0000	0.0000
							2	15.4529	0.5459
							3	0.0000	0.0000
							4	-15.4529	-0.5459
16.0000	1.3782	-0.4900	0.0584	0.0000	0.0000	0.0000	1	0.0000	0.0000
							2	19.7740	0.6891
							3	0.0000	0.0000
							4	-19.7740	-0.6891
20.0000	1.6192	-0.5756	0.0584	0.0000	0.0000	0.0000	1	0.0000	0.0000
							2	23.8356	0.8096
							3	0.0000	0.0000
							4	-23.8356	-0.8096
24.0000	1.8547	-0.659[illegible]	0.0584	0.0000	0.0000	[illegible]	1	[illegible].0000	0.0000
							2	28.3397	0.9274
							3	0.0000	0.0000
							4	-28.3397	-0.9274
28.0000	2.0750	-0.7377	0.0584	0.0000	0.0000	0.0000	1	0.0000	0.0000
							2	31.7188	1.0375
							3	0.0000	0.0000
							4	-32.7188	-1.0375

Figure 39 Fin Set in Presence of the Body Partial Output

THE USAF AUTOMATED MISSILE DATCOM * REV 4/91 *
AERODYNAMIC METHODS FOR MISSILE CONFIGURATIONS
PLANAR WING, CRUCIFORM PLUS TAIL CONFIGURATION
AERODYNAMIC FORCE AND MOMENT SYNTHESIS

CASE 1
PAGE 15

FLIGHT CONDITIONS								REFERENCE DIMENSIONS				
MACH NUMBER	ALTITUDE FT	VELOCITY FT/SEC	PRESSURE LB/IN**2	TEMPERATURE DEG R	REYNOLDS NUMBER 1/FT	SIDESLIP ANGLE DEG	ROLL ANGLE DEG	REF. AREA IN**2	REF. LENGTH LONG. IN	REF. LENGTH LAT. IN	MOMENT REF. CENTER LONG. IN	MOMENT REF. CENTER VERTICAL IN
2.36					3.000E+06	0.00	0.00	11.045	3.750	3.750	18.750	0.000

SYNTHESIS AERODYNAMICS FOR BODY-7IN SET 1

ANGLE OF ATTACK, DEG.	CN	CM	CA	CY	CLN	CLL
0.0000	0.0000	0.0000	0.2459	0.0000	0.0000	0.0000
4.0000	0.7170	0.3174	0.2460	0.0000	0.0000	0.0000
8.0000	1.5871	0.5457	0.2463	0.0000	0.0000	0.0000
12.0000	2.7534	0.6054	0.2468	0.0000	0.0000	0.0000
16.0000	3.9751	0.6007	0.2475	0.0000	0.0000	0.0000
20.0000	5.1647	0.5562	0.2484	0.0000	0.0000	0.0000
24.0000	6.2309	0.4989	0.2495	0.0000	0.0000	0.0000
28.0000	7.3689	0.3289	0.2509	0.0000	0.0000	0.0000

Figure 40 Body Plus Fin Set Partial Output

THE USAF AUTOMATED MISSILE DATCOM * REV 4/91 * CASE 1
AERODYNAMIC METHODS FOR MISSILE CONFIGURATIONS PAGE 16
PLANAR WING, CRUCIFORM PLUS TAIL CONFIGURATION
AERODYNAMIC FORCE AND MOMENT SYNTHESIS

FLIGHT CONDITIONS								REFERENCE DIMENSIONS				
MACH NUMBER	ALTITUDE FT	VELOCITY FT/SEC	PRESSURE LB/IN**2	TEMPERATURE DEG R	REYNOLDS NUMBER 1/FT	SIDESLIP ANGLE DEG	ROLL ANGLE DEG	REF. AREA IN**2	REF. LENGTH LONG. IN	REF. LENGTH LAT. IN	MOMENT REF. CENTER LONG. IN	MOMENT REF. CENTER VERTICAL IN
2.36					3.000E+06	0.00	0.00	11.045	3.750	3.750	18.750	0.000

SYNTHESIS AERODYNAMICS FOR BODY-FIN SET 1 AND 2

ANGLE OF ATTACK, DEG.	CN	CM	CA	CY	CLN	CLL
0.0000	0.0000	0.0000	0.3676	0.0000	0.0000	0.0000
4.0000	1.1236	-1.4716	0.3677	0.0000	0.0000	0.0000
8.0000	2.4267	-3.1490	0.3680	0.0000	0.0000	0.0000
12.0000	4.1015	-5.3266	0.3685	0.0000	0.0000	0.0000
16.0000	5.8796	-7.7793	0.3692	0.0000	0.0000	0.0000
20.0000	7.6316	-10.2981	0.3701	0.0000	0.0000	0.0000
24.0000	9.2350	-12.7195	0.3712	0.0000	0.0000	0.0000
28.0000	10.8586	-15.0261	0.3726	0.0000	0.0000	0.0000

Figure 41 Body Plus Two Fin Sets Partial Output

THE USAF AUTOMATED MISSILE DATCOM * REV 4/91 *
AERODYNAMIC METHODS FOR MISSILE CONFIGURATIONS
PLANAR WING, CRUCIFORM PLUS TAIL CONFIGURATION
AERODYNAMIC FORCE AND MOMENT SYNTHESIS

CASE 1
PAGE 17

FLIGHT CONDITIONS								REFERENCE DIMENSIONS				
MACH NUMBER	ALTITUDE FT	VELOCITY FT/SEC	PRESSURE LB/IN**2	TEMPERATURE DEG R	REYNOLDS NUMBER 1/FT	SIDESLIP ANGLE DEG	ROLL ANGLE DEG	REF. AREA IN**2	REF. LENGTH LONG. IN	LAT. IN	MOMENT REF. CENTER LONG. IN	VERTICAL IN
2.36					3.000E+06	0.00	0.00	11.045	3.750	3.750	18.750	0.000

CARRYOVER INTERFERENCE FACTORS

FIN SET	K-W(B)	K-B(W)	KF-W(B)	KK-B(W)	XCP-W(B)	XCP-B(W)
1	1.300543E+00	4.287630E-01	9.347357E-01	3.658075E-01	3.555199E-01	1.090305E+00
2	1.252313E+00	1.126451E-01	9.358542E-01	3.164592E-01	4.390780E+00	4.503570E+00

PANEL CENTERS OF PRESSURE

FIN SET	X-CP	Y-CP/(B/2)
1	3.5552E-01	3.2301E-01
2	4.3908E+00	4.1973E-01

Figure 42 Carryover Interference Factors Partial Output

THE USAF AUTOMATED MISSILE DATCOM * REV 4/91 *
AERODYNAMIC METHODS FOR MISSILE CONFIGURATIONS
PLANAR WING, CRUCIFORM PLUS TAIL CONFIGURATION
BODY ALONE STATIC AERODYNAMIC CHARACTERISTICS

CASE 1
PAGE 22

FLIGHT CONDITIONS								REFERENCE DIMENSIONS				
MACH NUMBER	ALTITUDE FT	VELOCITY FT/SEC	PRESSURE LB/IN**2	TEMPERATURE DEG R	REYNOLDS NUMBER 1/FT	SIDESLIP ANGLE DEG	ROLL ANGLE DEG	REF. AREA IN**2	REF. LENGTH LONG. IN	REF. LENGTH LAT. IN	MOMENT REF. CENTER LONG. IN	MOMENT REF. CENTER VERTICAL IN
2.36					3.000E+06	0.00	0.00	11.045	3.750	3.750	18.750	0.000

	LONGITUDINAL			LATERAL DIRECTIONAL			DERIVATIVES (PER DEGREE) LONGITUDINAL		LATERAL DIRECTIONAL		
ALPHA	CN	CM	CA	CY	CLN	CLL	CNA	CMA	CYB	CLNB	CLLB
0.00	0.000	0.000	0.187	0.000	0.000	0.000	4.579E-02	1.520E-01	-4.572E-02	-1.497E-01	0.000E+00
4.00	0.246	0.571	0.188	0.000	0.000	0.000	7.728E-02	1.333E-01	-6.189E-02	-1.421E-01	0.000E+00
8.00	0.618	1.066	0.188	0.000	0.000	0.000	1.317E-01	1.019E-01	-7.721E-02	-1.322E-01	0.000E+00
12.00	1.301	1.386	0.188	0.000	0.000	0.000	1.904E-01	6.493E-02	-1.071E-01	-1.136E-01	0.000E+00
16.00	2.143	1.586	0.189	0.000	0.000	0.000	2.138E-01	4.097E-02	-1.305E-01	-9.644E-02	0.000E+00
20.00	3.012	1.714	0.190	0.000	0.000	0.000	2.027E-01	2.987E-02	-1.445E-01	-8.213E-02	0.000E+00
24.00	3.765	1.825	0.191	0.000	0.000	0.000	1.997E-01	1.232E-02	-1.476E-01	-7.150E-02	0.000E+00
28.00	4.610	1.812	0.192	0.000	0.000	0.000	2.228E-01	-1.862E-02	-1.513E-01	-5.946E-02	0.000E+00

ALPHA	CL	CD	CL/CD	X-C.P.
0.00	0.000	0.187	0.000	3.320
4.00	0.232	0.204	1.138	2.318
8.00	0.586	0.272	2.154	1.725
12.00	1.234	0.455	2.713	1.065
16.00	2.007	0.772	2.599	0.740
20.00	2.765	1.209	2.288	0.559
24.00	3.362	1.706	1.971	0.485
28.00	3.580	2.334	1.705	0.393

LINEAR DATA FOR BODY ALONE WAS GENERATED USING THE SECOND-ORDER SHOCK EXPANSION METHOD

Figure 43 Body Alone Static Aerodynamic Partial Output

THE USAF AUTOMATED MISSILE DATCOM * REV 4/91 *
AERODYNAMIC METHODS FOR MISSILE CONFIGURATIONS
PLANAR WING, CRUCIFORM PLUS TAIL CONFIGURATION
FIN 1 ALONE STATIC AERODYNAMIC CHARACTERISTICS

CASE 1
PAGE 23

FLIGHT CONDITIONS								REFERENCE DIMENSIONS				
MACH NUMBER	ALTITUDE FT	VELOCITY FT/SEC	PRESSURE LB/IN**2	TEMPERATURE DEG R	REYNOLDS NUMBER 1/FT	SIDESLIP ANGLE DEG	ROLL ANGLE DEG	REF. AREA IN**2	REF. LENGTH LONG. IN	REF. LENGTH LAT. IN	MOMENT REF. CENTER LONG. IN	MOMENT REF. CENTER VERTICAL IN
2.36					3.000E+06	0.00	0.00	11.045	3.750	3.750	18.750	0.000

	LONGITUDINAL			LATERAL DIRECTIONAL			DERIVATIVES (PER DEGREE) LONGITUDINAL		DERIVATIVES (PER DEGREE) LATERAL DIRECTIONAL		
ALPHA	CN	CM	CA	CY	CLN	CLL	CNA	CMA	CYB	CLNB	CLLB
0.00	0.000	0.000	0.058				6.505E-02	-2.312E-02			
4.00	0.269	-0.096	0.058				6.960E-02	-2.470E-02			
8.00	0.557	-0.198	0.058				7.223E-02	-2.561E-02			
12.00	0.847	-0.301	0.058				7.159E-02	-2.537E-02			
16.00	1.129	-0.401	0.058				6.816E-02	-2.414E-02			
20.00	1.392	-0.494	0.058				6.235E-02	-2.208E-02			
24.00	1.628	-0.577	0.058				5.569E-02	-1.972E-02			
28.00	1.839	-0.651	0.058				4.913E-02	-1.738E-02			

ALPHA	CL	CD	CL/CD	X-C.P.
0.00	0.000	0.058	0.000	-0.355
4.00	0.265	0.077	3.432	-0.355
8.00	0.543	0.135	4.013	-0.355
12.00	0.817	0.233	3.500	-0.355
16.00	1.070	0.368	2.910	-0.355
20.00	1.298	0.531	2.426	-0.355
24.00	1.464	0.716	2.045	-0.354
28.00	1.595	0.914	1.745	-0.354

Figure 44 Fin Alone Static Aerodynamic Partial Output

THE USAF AUTOMATED MISSILE DATCOM * REV 4/91 *
AERODYNAMIC METHODS FOR MISSILE CONFIGURATIONS
PLANAR WING, CRUCIFORM PLUS TAIL CONFIGURATION
STATIC AERODYNAMICS FOR BODY-FIN SET 1

CASE 1
PAGE 25

FLIGHT CONDITIONS								REFERENCE DIMENSIONS				
MACH NUMBER	ALTITUDE FT	VELOCITY FT/SEC	PRESSURE LB/IN**2	TEMPERATURE DEG R	REYNOLDS NUMBER 1/FT	SIDESLIP ANGLE DEG	ROLL ANGLE DEG	REF. AREA IN**2	REF. LENGTH LONG. IN	REF. LENGTH LAT. IN	MOMENT REF. LONG. IN	CENTER VERTICAL IN
2.36					3.000E+06	0.00	0.00	11.045	3.750	3.750	18.750	0.000

	LONGITUDINAL			LATERAL DIRECTIONAL			DERIVATIVES (PER DEGREE) LONGITUDINAL		LATERAL DIRECTIONAL		
ALPHA	CN	CM	CA	CY	CLN	CLL	CNA	CMA	CYB	CLNB	CLLB
0.00	0.000	0.000	0.246	0.000	0.000	0.000	1.602E-01	9.052E-02			
4.00	0.717	0.317	0.246	0.000	0.000	0.000	1.983E-01	6.820E-02			
8.00	1.587	0.546	0.246	0.000	0.000	0.000	2.542E-01	3.598E-02			
12.00	2.753	0.605	0.247	0.000	0.000	0.000	2.985E-01	6.878E-03			
16.00	3.975	0.601	0.247	0.000	0.000	0.000	3.014E-01	-6.152E-03			
20.00	5.165	0.556	0.248	0.000	0.000	0.000	2.819E-01	-1.272E-02			
24.00	6.231	0.499	0.250	0.000	0.000	0.000	2.755E-01	-2.841E-02			
28.00	7.369	0.329	0.251	0.000	0.000	0.000	2.935E-01	-5.662E-02			

ALPHA	CL	CD	CL/CD	X-C.P.
0.00	0.000	0.246	0.000	0.565
4.00	0.698	0.295	2.363	0.443
8.00	1.537	0.465	3.308	0.344
12.00	2.642	0.814	3.246	0.220
16.00	3.753	1.334	2.814	0.151
20.00	4.768	2.000	2.384	0.108
24.00	5.591	2.762	2.024	0.080
28.00	6.389	3.681	1.736	0.045

PANEL DEFLECTION ANGLES (DEGREES)

FIN SET	FIN 1	FIN 2	FIN 3	FIN 4
1	0.00	0.00	0.00	0.00

LINEAR DATA FOR BODY ALONE WAS GENERATED USING THE SECOND-ORDER SHOCK EXPANSION METHOD

Figure 45 Body Plus Fin Static Aerodynamic Partial Output

THE USAF AUTOMATED MISSILE DATCOM * REV 4/91 *
AERODYNAMIC METHODS FOR MISSILE CONFIGURATIONS
PLANAR WING, CRUCIFORM PLUS TAIL CONFIGURATION
FIN SET 1 PANEL BENDING MOMENTS (ABOUT EXPOSED ROOT CHORD)

CASE 1
PAGE 18

FLIGHT CONDITIONS								REFERENCE DIMENSIONS				
MACH NUMBER	ALTITUDE FT	VELOCITY FT/SEC	PRESSURE LB/IN**2	TEMPERATURE DEG R	REYNOLDS NUMBER 1/FT	SIDESLIP ANGLE DEG	ROLL ANGLE DEG	REF. AREA IN**2	REF. LENGTH LONG. IN	REF. LENGTH LAT. IN	MOMENT REF. CENTER LONG. IN	MOMENT REF. CENTER VERTICAL IN
2.36					3.000E+06	0.00	0.00	11.045	3.750	3.750	18.750	0.000

ANGLE OF ATTACK, DEG.	PANEL 1	PANEL 2	PANEL 3	PANEL 4
0.0000	0.00000E+00	0.00000E+00	0.00000E+00	0.00000E+00
4.0000	0.00000E+00	5.30687E-02	8.07691E-09	-5.30687E-02
8.0000	0.00000E+00	1.09182E-01	1.70681E-08	-1.09182E-01
12.0000	0.00000E+00	1.63648E-01	2.70646E-08	-1.63648E-01
16.0000	-1.49415E-08	2.06561E-01	2.32314E-08	-2.06561E-01
20.0000	-2.83057E-08	2.42673E-01	5.05213E-08	-2.42673E-01
24.0000	-3.36869E-08	2.77978E-01	9.79532E-08	-2.77978E-01
26.0000	-6.00104E-08	3.10986E-01	1.19611E-07	-3.10986E-01

Figure 46 Panel Bending Moment Partial Output

THE USAF AUTOMATED MISSILE DATCOM * REV 4/91 *
AERODYNAMIC METHODS FOR MISSILE CONFIGURATIONS
PLANAR WING, CRUCIFORM PLUS TAIL CONFIGURATION
FIN SET 1 PANEL HINGE MOMENTS (ABOUT HINGE LINE)

CASE 1
PAGE 20

FLIGHT CONDITIONS								REFERENCE DIMENSIONS				
MACH NUMBER	ALTITUDE FT	VELOCITY FT/SEC	PRESSURE LB/IN**2	TEMPERATURE DEG R	REYNOLDS NUMBER 1/FT	SIDESLIP ANGLE DEG	ROLL ANGLE DEG	REF. AREA IN**2	REF. LENGTH LONG. IN	REF. LENGTH LAT. IN	MOMENT REF. LONG. IN	MOMENT REF. CENTER VERTICAL IN
2.36					3.000E+06	0.00	0.00	11.045	3.750	3.750	18.750	0.000

ANGLE OF ATTACK, DEG.	PANEL 1	PANEL 2	PANEL 3	PANEL 4
0.0000	0.00000E+00	0.00000E+00	0.00000E+00	0.00000E+00
4.0000	0.00000E+00	-5.58607E-02	-8.50186E-09	5.58607E-02
8.0000	0.00000E+00	-1.14926E-01	-1.79661E-08	1.14926E-01
12.0000	0.00000E+00	-1.72258E-01	-2.84885E-08	1.72258E-01
16.0000	1.57276E-08	-2.17429E-01	-2.44537E-08	2.17429E-01
20.0000	2.97949E-08	-2.55441E-01	-5.31793E-03	2.55441E-01
24.0000	3.54592E-08	-2.92603E-01	-1.03107E-07	2.92603E-01
28.0000	6.31677E-08	-3.27347E-01	-1.25904E-07	3.27347E-01

Figure 47 Panel Hinge Moment Partial Output

THE USAF AUTOMATED MISSILE DATCOM * REV 4/91 *
AERODYNAMIC METHODS FOR MISSILE CONFIGURATIONS
PLANAR WING, CRUCIFORM PLUS TAIL CONFIGURATION
UNTRIMMED STATIC AERODYNAMIC COEFFICIENTS

CASE 1
PAGE 2

FLIGHT CONDITIONS								REFERENCE DIMENSIONS				
MACH NUMBER	ALTITUDE FT	VELOCITY FT/SEC	PRESSURE LB/IN**2	TEMPERATURE DEG R	REYNOLDS NUMBER 1/FT	SIDESLIP ANGLE DEG	ROLL ANGLE DEG	REF. AREA IN**2	REF. LENGTH LONG. IN	REF. LENGTH LAT. IN	MOMENT LONG. IN	REF. CENTER VERTICAL IN
0.60					1.000E+06	0.00	0.00	11.045	3.750	3.750	18.750	0.000

TABLE OF UNTRIMMED NORMAL FORCE COEFFICIENTS

PANEL DEFLECTION ANGLE, DEG.

ALPHA	-25.0000	-20.0000	-15.0000	-10.0000	-5.0000	0.0000	5.0000	10.0000	15.0000	20.0000
0.00	-1.0150	-0.9025	-0.7207	-0.4950	-0.2471	0.0000	0.2471	0.4950	0.7207	0.9025
8.00	1.9098	2.3005	2.6479	2.9346	3.1942	3.4112	3.6550	3.8627	4.0093	4.0666
16.00	4.6103	5.1425	5.7523	6.3950	7.0090	7.5348	7.9105	8.0954	8.0628	7.7300

NOMINAL DEFLECTION ANGLES (DEGREES)

FIN SET	FIN 1	FIN 2	FIN 3	FIN 4
1	0.00	0.00	0.00	0.00
2	0.00	0.00	0.00	0.00

PANELS IN FIN SET 1 HAVE BEEN DEFLECTED

Figure 48 Untrimmed Partial Output

THE USAF AUTOMATED MISSILE DATCOM * REV 4/91 *
AERODYNAMIC METHODS FOR MISSILE CONFIGURATIONS
PLANAR WING, CRUCIFORM PLUS TAIL CONFIGURATION
BODY ALONE PRESSURE OUTPUT

CASE 1
PAGE 6

MACH = 2.36 ANGLE OF ATTACK = 0.00 DEG.

PRESSURE COEFFICIENTS

X/DMAX	CP	M-LOCAL
0.000000	0.284442	1.867502
0.050000	0.276666	1.876899
0.100000	0.268558	1.886836
0.150000	0.260664	1.896649
0.200000	0.252793	1.906577
0.250000	0.244938	1.916553
0.300000	0.237277	1.926579
0.350000	0.229629	1.936659
0.400000	0.222055	1.946791
0.450000	0.214555	1.956977
0.500000	0.207422	1.966809
0.550000	0.200348	1.976703
0.600000	0.193339	1.986654
.	.	.
.	.	.
.	.	.
9.000000	-0.001058	2.348805
9.050000	-0.001027	2.348726
9.100000	-0.000996	2.348649
9.150001	-0.000966	2.348574
9.200000	-0.000937	2.348502
9.250000	-0.000909	2.348431
9.300000	-0.000881	2.348362
9.350000	-0.000855	2.348296
9.400001	-0.000829	2.348232
9.450000	-0.000804	2.348170
9.500000	-0.000780	2.348109
9.550000	-0.000757	2.348050
9.600000	-0.000734	2.347993
9.650001	-0.000712	2.347938
9.700000	-0.000691	2.347885
9.750000	-0.000670	2.347833
9.800000	-0.000650	2.347783
9.850000	-0.000630	2.347734
9.900001	-0.000611	2.347687
9.950000	-0.000593	2.347641
10.000000	-0.000575	2.347596

Figure 49 Body Pressure Distribution from SOSE, AOA=0°

THE USAF AUTOMATED MISSILE DATCOM * REV 4/91 *
AERODYNAMIC METHODS FOR MISSILE CONFIGURATIONS
PLANAR WING, CRUCIFORM PLUS TAIL CONFIGURATION
BODY ALONE PRESSURE OUTPUT

CASE 1
PAGE 7

MACH = 2.36 ANGLE OF ATTACK = 4.00 DEG.

PRESSURE COEFFICIENTS

X/DMAX	PHI=0	PHI=30	PHI=60	PHI=90	PHI=120	PHI=150	PHI=180
0.000000	0.205017	0.213251	0.238086	0.277548	0.323402	0.361022	0.375649
0.050000	0.198498	0.206561	0.230035	0.269780	0.315035	0.352226	0.366698
0.100000	0.191601	0.199509	0.223454	0.261705	0.306353	0.343094	0.357399
0.150000	0.184943	0.192688	0.216291	0.253836	0.297876	0.334171	0.348313
0.200000	0.178321	0.185902	0.208957	0.245988	0.289413	0.325258	0.339235
0.250000	0.171782	0.179199	0.201802	0.238216	0.281024	0.316416	0.330227
0.300000	0.165323	0.172574	0.194724	0.230518	0.272706	0.307643	0.321287
0.350000	0.158942	0.166027	0.187721	0.222893	0.264458	0.298938	0.312415
0.400000	0.152640	0.159557	0.180795	0.215342	0.256280	0.290301	0.303610
0.450000	0.146416	0.153166	0.173945	0.207864	0.248173	0.281733	0.294873
0.500000	0.140527	0.147113	0.167444	0.200751	0.240449	0.273562	0.286538
0.550000	0.134699	0.141121	0.161004	0.193699	0.232784	0.265447	0.278259
0.600000	0.128937	0.135194	0.154629	0.186710	0.225180	0.257393	0.270039
0.650000	0.123244	0.129338	0.148323	0.179790	0.217643	0.249402	0.261882
0.700000	0.117622	0.123551	0.142088	0.172938	0.210172	0.241476	0.253789
.	.	.	.	.	.	.	.
.	.	.	.	.	.	.	.
.	.	.	.	.	.	.	.
9.250000	0.006124	0.002622	-0.004344	-0.007705	-0.003958	0.003291	0.006897
9.300000	0.006164	0.002660	-0.004312	-0.007678	-0.003937	0.003309	0.006913
9.350000	0.006203	0.002696	-0.004280	-0.007653	-0.003916	0.003326	0.006930
9.400001	0.006240	0.002732	-0.004249	-0.007628	-0.003897	0.003343	0.006946
9.450000	0.006277	0.002767	-0.004219	-0.007604	-0.003877	0.003359	0.006961
9.500000	0.006312	0.002800	-0.004191	-0.007581	-0.003859	0.003375	0.006976
9.550000	0.006347	0.002833	-0.004163	-0.007558	-0.003841	0.003390	0.006990
9.600000	0.006380	0.002865	-0.004135	-0.007536	-0.003823	0.003405	0.007004
9.650001	0.006412	0.002895	-0.004109	-0.007515	-0.003806	0.003420	0.007018
9.700000	0.006443	0.002925	-0.004083	-0.007495	-0.003790	0.003434	0.007031
9.750000	0.006474	0.002954	-0.004059	-0.007474	-0.003774	0.003447	0.007044
9.800000	0.006503	0.002982	-0.004035	-0.007455	-0.003758	0.003460	0.007056
9.850000	0.006532	0.003009	-0.004011	-0.007436	-0.003743	0.003473	0.007068
9.900001	0.006560	0.003035	-0.003989	-0.007418	-0.003729	0.003485	0.007080
9.950000	0.006587	0.003061	-0.003967	-0.007400	-0.003714	0.003497	0.007091
10.000000	0.006613	0.003085	-0.003945	-0.007383	-0.003701	0.003509	0.007102

NOTE - PHI= 0 IS TOP VERTICAL CENTER (LEEWARD)
PHI=180 IS BOTTOM VERTICAL CENTER (WINDWARD)

Figure 50 Body Pressure Distribution at Angle of Attack

THE USAF AUTOMATED MISSILE DATCOM * REV 4/91 *
AERODYNAMIC METHODS FOR MISSILE CONFIGURATIONS
PLANAR WING, CRUCIFORM PLUS TAIL CONFIGURATION
PRESSURE COEFFICIENTS ON FIN SET 1 AT MACH = 2.360

FOR ALPHA = 0.0

LOCAL CHORD = 0.5798 FT

Y/(B/2)	X/C	CP
0.0003	0.0000	0.3413
0.0003	0.0000	0.3310
0.0003	0.0001	0.3013
0.0003	0.0003	0.2559
0.0003	0.0005	0.2003
0.0003	0.0008	0.1410
0.0003	0.0011	0.0853
0.0003	0.0014	0.0399
0.0003	0.0023	0.0229
0.0003	0.0025	0.0200
0.0003	0.0026	0.0173
0.0003	0.0028	0.0148
0.0003	0.0029	0.0124
0.0003	0.0031	0.0103
0.0003	0.0032	0.0052
0.0003	0.0034	-0.0052
.	.	.
.	.	.
.	.	.
0.0003	0.5020	-0.0049
0.0003	0.5326	-0.0049
0.0003	0.5631	-0.0049
0.0003	0.5937	-0.0049
0.0003	0.6243	-0.0049
0.0003	0.6549	-0.0049
0.0003	0.6854	-0.0049
0.0003	0.7160	-0.0814
0.0003	0.7160	-0.0814
0.0003	0.7444	-0.0682
0.0003	0.7728	-0.0682
0.0003	0.8012	-0.0682
0.0003	0.8296	-0.0682
0.0003	0.8580	-0.0682
0.0003	0.8864	-0.0682
0.0003	0.9148	-0.0682
0.0003	0.9432	-0.0682
0.0003	0.9716	-0.0682
0.0003	1.0000	0.0055

Figure 51 Fin Pressure Distribution Output

THE USAF AUTOMATED MISSILE DATCOM * REV 4/91 *
AERODYNAMIC METHODS FOR MISSILE CONFIGURATIONS
PLANAR WING, CRUCIFORM PLUS TAIL CONFIGURATION
BODY + 2 FIN SETS DYNAMIC DERIVATIVES

CASE 1
PAGE 3

FLIGHT CONDITIONS								REFERENCE DIMENSIONS				
MACH NUMBER	ALTITUDE FT	VELOCITY FT/SEC	PRESSURE LB/IN**2	TEMPERATURE DEG R	REYNOLDS NUMBER 1/FT	SIDESLIP ANGLE DEG	ROLL ANGLE DEG	REF. AREA IN**2	REF. LENGTH LONG. IN	REF. LENGTH LAT. IN	MOMENT REF. CENTER LONG. IN	MOMENT REF. CENTER VERTICAL IN
2.36					3.000E+06	0.00	0.00	11.045	3.750	3.750	18.750	0.000

DYNAMIC DERIVATIVES (PER DEGREE)

ALPHA	CMQ	CMAD	CMQ+CMAD
0.0	6.984E-01	3.641E-01	-3.83418E+00
4.0	8.745E-01	6.338E-01	-4.53844E+00
8.0	1.168E+00	1.101E+00	-5.62797E+00
12.0	1.492E+00	1.606E+00	-6.77794E+00
16.0	1.727E.00	1.946E+00	-7.59595E+00

Figure 52 Dynamic Derivative Output

```
                                   THE USAF AUTOMATED MISSILE DATCOM * REV  4/91 *                                  CASE   1
                                   AERODYNAMIC METHODS FOR MISSILE CONFIGURATIONS                                    PAGE   3
                                   PLANAR WING, CRUCIFORM PLUS TAIL CONFIGURATION
                                       EXTRAPOLATION SUMMARY FOR INPUT MACH  1

--------------------- ROUTINE TRACE-BACK --------------------        LOWER BOUNDS          UPPER BOUNDS          FINAL RESULT

MISDAT  AERO    ASECT   MAXCL   MVLOOK  LNTRP                       X= 3.0000000E+06      X= 2.5000000E+07      X= 1.1600000E+06
                                                                    Y=-3.2997910E-02      Y= 4.3997213E-02      Y=-5.3236630E-02

MISDAT  AERO    ASECT   MAXCL   MVLOOK  LNTRP                       X= 3.0000000E+06      X= 2.5000000E+07      X= 1.0859260E+06
                                                                    Y=-3.1011123E-02      Y= 4.1348159E-02      Y=-5.0796986E-02

MISDAT  AERO    BODY    BODYA   STBODY  BODYCM  BDCMAN  MVLOOK      X= 8.0000001E-01      X= 1.0000000E+00      X= 1.1000000E+00
                                                LNTRP               Y= 4.4000001E+00      Y= 5.9000001E+00      Y= 5.5000005E+00

MISDAT  AERO    BODY    BODYA   STBODY  BODYCM  BDCMAN  MVLOOK      X= 8.0000001E-01      X= 1.0000000E+00      X= 1.1000000E+00
                                                LNTRP               Y= 7.7500000E+00      Y= 8.0500002E+00      Y= 7.7500010E+00

MISDAT  AERO    BODY    BODYA   STBODY  BODYCM  BDCMAN  MVLOOK      X= 8.0000001E-01      X= 1.0000000E+00      X= 1.1000000E+00
                                                LNTRP               Y= 1.0450000E+01      Y= 1.0600000E+01      Y= 1.0400002E+01

MISDAT  AERO    BODY    BODYA   STBODY  BODYCM  BDXCPN  MVLOOK      X= 8.0000001E-01      X= 1.0000000E+00      X= 1.1000000E+00
                                                LNTRP               Y= 5.8000002E+00      Y= 4.9499998E+00      Y= 3.5499992E+00

MISDAT  AERO    BODY    BODYA   STBODY  BODYCM  BDXCPN  MVLOOK      X= 8.0000001E-01      X= 1.0000000E+00      X= 1.1000000E+00
                                                LNTRP               Y= 8.5000000E+00      Y= 7.9000001E+00      Y= 6.0999999E+00

MISDAT  AERO    BODY    BODYA   STBODY  BODYCM  BDXCPN  MVLOOK      X= 8.0000001E-01      X= 1.0000000E+00      X= 1.1000000E+00
                                                LNTRP               Y= 1.1650000E+01      Y= 1.1500000E+01      Y= 1.0900000E+01

MISDAT  AERO    FINS    FINCM   FCNAA   FCNAAT  FCNAAS  FCLMSB      X= 0.0000000E+00      X= 6.0000000E+01      X= 6.3434952E+01
                                                MVLOOK  LNTRP       Y= 8.9999998E-01      Y= 1.3000000E+00      Y= 1.3343494E+00

MISDAT  AERO    FINS    FINCM   FCNAA   FCNAAT  FCNAAS  FCLMSB      X= 0.0000000E+00      X= 6.0000000E+01      X= 6.3434952E+01
                                                MVLOOK  LNTRP       Y= 8.9999998E-01      Y= 1.1900001E+00      Y= 1.2174797E+00

MISDAT  AERO    FINS    FINCM   FCNAA   FCNAAT  FCNAAS  FCLMSB      X= 0.0000000E+00      X= 6.0000000E+01      X= 6.3434952E+01
                                                MVLOOK  LNTRP       Y= 8.9999998E-01      Y= 1.0300000E+00      Y= 1.0437398E+00

MISDAT  AERO    FINS    FINCM   FCNAA   FCNAAT  FCNAAS  FCLMSB      X= 0.0000000E+00      X= 6.0000000E+01      X= 6.3434952E+01
                                                MVLOOK  LNTRP       Y= 8.9999998E-01      Y= 8.7000000E-01      Y= 8.6656505E-01

MISDAT  AERO    FINS    FINCM   FCNAA   FCNAAT  FCNAAS  FCLMSB      X= 0.0000000E+00      X= 6.0000000E+01      X= 6.3434952E+01
                                                MVLOOK  LNTRP       Y= 8.9999998E-01      Y= 7.3000002E-01      Y= 7.1282530E-01

MISDAT  AERO    FINS    FINCM   FCNAA   FCNAAT  FCNAAS  FCLMSB      X= 0.0000000E+00      X= 6.0000000E+01      X= 6.3434952E+01
                                                MVLOOK  LNTRP       Y= 8.9999998E-01      Y= 5.8999997E-01      Y= 5.4878056E-01
```

Figure 53 Extrapolation Message Output

```
DUMP OF INTERNAL DATA ARRAYS IN FOOT-POUND-RANKINE UNITS

FLT(  1)= 5.00000E+00   FLT(  2)= 0.00000E+00   FLT(  3)= 4.00000E+00   FLT(  4)= 8.00000E+00   FLT(  5)= 1.20000E+01
FLT(  6)= 1.60000E+01   FLT(  7)= 1.00000E-30   FLT(  8)= 1.00000E-30   FLT(  9)= 1.00000E-30   FLT( 10)= 1.00000E-30
FLT( 11)= 1.00000E-30   FLT( 12)= 1.00000E-30   FLT( 13)= 1.00000E-30   FLT( 14)= 1.00000E-30   FLT( 15)= 1.00000E-30
FLT( 16)= 1.00000E-30   FLT( 17)= 1.00000E-30   FLT( 18)= 1.00000E-30   FLT( 19)= 1.00000E-30   FLT( 20)= 1.00000E-30
FLT( 21)= 1.00000E-30   FLT( 22)= 0.00000E+00   FLT( 23)= 0.00000E+00   FLT( 24)= 1.00000E+00   FLT( 25)= 2.36000E+00
FLT( 26)= 1.00000E-30   FLT( 27)= 1.00000E-30   FLT( 28)= 1.00000E-30   FLT( 29)= 1.00000E-30   FLT( 30)= 1.00000E-30
FLT( 31)= 1.00000E-30   FLT( 32)= 1.00000E-30   FLT( 33)= 1.00000E-30   FLT( 34)= 1.00000E-30   FLT( 35)= 1.00000E-30
FLT( 36)= 1.00000E-30   FLT( 37)= 1.00000E-30   FLT( 38)= 1.00000E-30   FLT( 39)= 1.00000E-30   FLT( 40)= 1.00000E-30
FLT( 41)= 1.00000E-30   FLT( 42)= 1.00000E-30   FLT( 43)= 1.00000E-30   FLT( 44)= 1.00000E-30   FLT( 45)= 1.00000E-30
FLT( 46)= 3.00000E+06   FLT( 47)= 1.00000E-30   FLT( 48)= 1.00000E-30   FLT( 49)= 1.00000E-30   FLT( 50)= 1.00000E-30
FLT( 51)= 1.00000E-30   FLT( 52)= 1.00000E-30   FLT( 53)= 1.00000E-30   FLT( 54)= 1.00000E-30   FLT( 55)= 1.00000E-30
FLT( 56)= 1.00000E-30   FLT( 57)= 1.00000E-30   FLT( 58)= 1.00000E-30   FLT( 59)= 1.00000E-30   FLT( 60)= 1.00000E-30
FLT( 61)= 1.00000E-30   FLT( 62)= 1.00000E-30   FLT( 63)= 1.00000E-30   FLT( 64)= 1.00000E-30   FLT( 65)= 1.00000E-30
FLT( 66)= 1.00000E-30   FLT( 67)= 1.00000E-30   FLT( 68)= 1.00000E-30   FLT( 69)= 1.00000E-30   FLT( 70)= 1.00000E-30
FLT( 71)= 1.00000E-30   FLT( 72)= 1.00000E-30   FLT( 73)= 1.00000E-30   FLT( 74)= 1.00000E-30   FLT( 75)= 1.00000E-30
FLT( 76)= 1.00000E-30   FLT( 77)= 1.00000E-30   FLT( 78)= 1.00000E-30   FLT( 79)= 1.00000E-30   FLT( 80)= 1.00000E-30
FLT( 81)= 1.00000E-30   FLT( 82)= 1.00000E-30   FLT( 83)= 1.00000E-30   FLT( 84)= 1.00000E-30   FLT( 85)= 1.00000E-30
FLT( 86)= 1.00000E-30   FLT( 87)= 1.00000E-30   FLT( 88)= 1.00000E-30   FLT( 89)= 1.00000E-30   FLT( 90)= 1.00000E-30
FLT( 91)= 1.00000E-30   FLT( 92)= 1.00000E-30   FLT( 93)= 1.00000E-30   FLT( 94)= 1.00000E-30   FLT( 95)= 1.00000E-30
FLT( 96)= 1.00000E-30   FLT( 97)= 1.00000E-30   FLT( 98)= 1.00000E-30   FLT( 99)= 1.00000E-30   FLT(100)= 1.00000E-30
FLT(101)= 1.00000E-30   FLT(102)= 1.00000E-30   FLT(103)= 1.00000E-30   FLT(104)= 1.00000E-30   FLT(105)= 1.00000E-30
FLT(106)= 1.00000E-30   FLT(107)= 1.00000E-30   FLT(108)= 1.00000E-30   FLT(109)= 1.00000E-30   FLT(110)= 1.00000E-30
FLT(111)= 1.00000E-30   FLT(112)= 1.00000E-30   FLT(113)= 1.00000E-30   FLT(114)= 1.00000E-30   FLT(115)= 1.00000E-30
FLT(116)= 1.00000E-30   FLT(117)= 1.00000E-30   FLT(118)= 1.00000E-30   FLT(119)= 1.00000E-30   FLT(120)= 1.00000E-30
FLT(121)= 1.00000E-30   FLT(122)= 1.00000E-30   FLT(123)= 1.00000E-30   FLT(124)= 1.00000E-30   FLT(125)= 1.00000E-30

REFQ(  1)= 7.66990E-02  REFQ(  2)= 3.12500E-01  REFQ(  3)= 3.12500E-01  REFQ(  4)= 0.00000E+00  REFQ(  5)= 1.56250E+00
REFQ(  6)= 0.00000E+00  REFQ(  7)= 1.00000E+00  REFQ(  8)= 0.00000E+00  REFQ(  9)= 1.00000E-30
```

Figure 54 Internal Array Dump Output

A. EXAMPLE PROBLEMS

This appendix presents two example problems for use in verifying the proper operation of the computer code, or for use as a model for the setup of inputs of similar configurations. The first example is a simple tangent ogive nose-cylinder circular body. It has a planar wing (two panels) and a cruciform set of tails orientated in the "plus" configuration. There are two input cases for this problem. The first demonstrates the output generated when the PART control card is included. The second demonstrates the output created when trim has been requested; note that trim partial output has been requested with the PRINT AERO TRIM control card.

The second problem is a body-tail-inlet configuration. Three Mach numbers are requested, one subsonic, one transonic, and one supersonic. Although all three Mach numbers could be run in a single case, they have been divided into three separate cases to illustrate the "SAVE" feature as well as selecting particular output for illustration.

A.1 Example Problem 1

The first example problem is shown in Figure A-1. It is comprised of a 3-caliber tangent ogive nose attached to a cylindrical body; a triangular monoplane set of wings; and a cruciform set of tails orientated in the "plus" position. The first case is a simple angle of attack sweep; component buildup data and partial output are requested. The second case is a trim of the configuration using the two horizontal tail surfaces. The inputs are shown in Figure A-2.

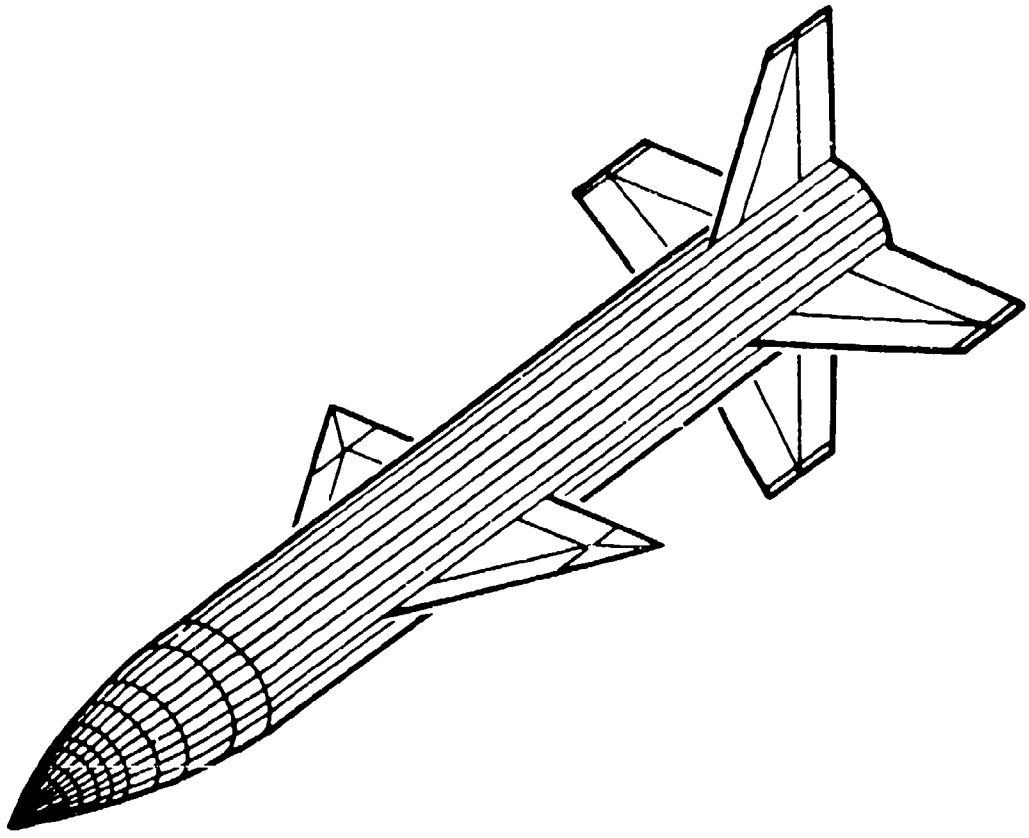

Figure A-1 Example Problem 1 Configuration

```
                    THE USAF AUTOMATED MISSILE DATCOM * REV  4/91 *
                    AERODYNAMIC METHODS FOR MISSILE CONFIGURATIONS
                          CONERR - INPUT ERROR CHECKING

ERROR CODES - N* DENOTES THE NUMBER OF OCCURENCES OF EACH ERROR

A - UNKNOWN VARIABLE NAME

B - MISSING EQUAL SIGN FOLLOWING VARIABLE NAME

C - NON-ARRAY VARIABLE HAS AN ARRAY ELEMENT DESIGNATION - (N)

D - NON-ARRAY VARIABLE HAS MULTIPLE VALUES ASSIGNED

E - ASSIGNED VALUES EXCEED ARRAY DIMENSION

F - SYNTAX ERROR

   ****************************  INPUT DATA CARDS  ****************************

 1 CASEID PLANAR WING, CRUCIFORM PLUS TAIL CONFIGURATION
 2 DIM IN
 3 NO LAT
 4 SOSE
 5  $FLTCON NMACH=1.,MACH=2.36,RN=3.0E6,
 6          NALPHA=8.,ALPHA=0.,4.,8.,12.,16 ,20.,24.,28.,$
 7  $REFQ XCG=18.75,$
 8  $AXIBOD LNOSE=11.25,DNOSE=3.75,LCENTR=26.25,$
 9  $FINSET1 CHORD=6.96,0.,SSPAN=1.875,5.355,XLE=15.42,
10           SWEEP=0.,STA=1.,ZUPPER=2*0.02238,
11           NPANEL=2.,PHIF=90.,270.,
12           LMOXU=0.238,LER=2*0.015,LFLATU=0.514,$
13  $FINSET2 CHORD=5.585,2.792 SSPAN=1.875,6.260,XLE=31.915,
14           SWEEP=0.,STA=1.,ZUPPER=2*0.02238,
15           NPANEL=4.,PHIF=0.,90.,180.,270.,
16           LMOXU=0.288,LER=2*0.015,LFLATU=0.428,$
17 BUILD
18 PART
19 SAVE
20 NEXT CASE
21 CASEID TRIM OF CASE NUMBER 1
22  $TRIM SET=2.,$
23 PRINT AERO TRIM
24 NEXT CASE
```

Figure A-2 Example Problem 1 Input

A.2 Example Problem 2

The configuration for this example is sketched in Figures A-3 and A-4. The figure is a modified copy of the wind tunnel model drawings from NASA Technical Memorandum 84557. The model definition in these figures is representative of the detail normally found on design drawings.

This example has been divided into subsonic, transonic, and supersonic cases. Each case is run for one Mach number. Although all three Mach numbers could have been run in one case they were run separately to demonstrate the SAVE capability.

This example provides a check case for the inlet option. It can be used by the user to make sure that he understands the inputs. Figure A-5 shows the inputs required to run this example.

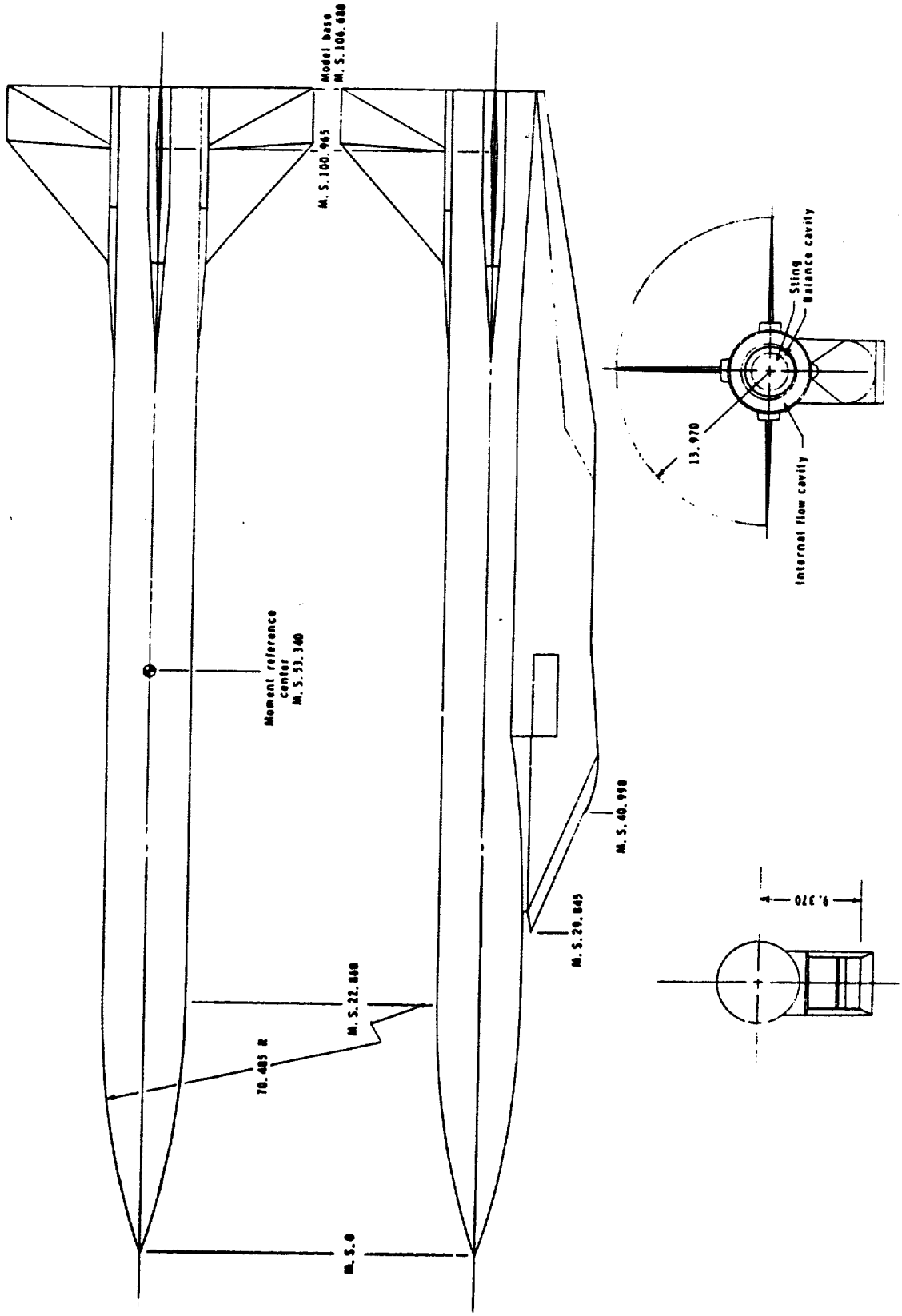

Figure A-3 Example Problem 2 Configuration

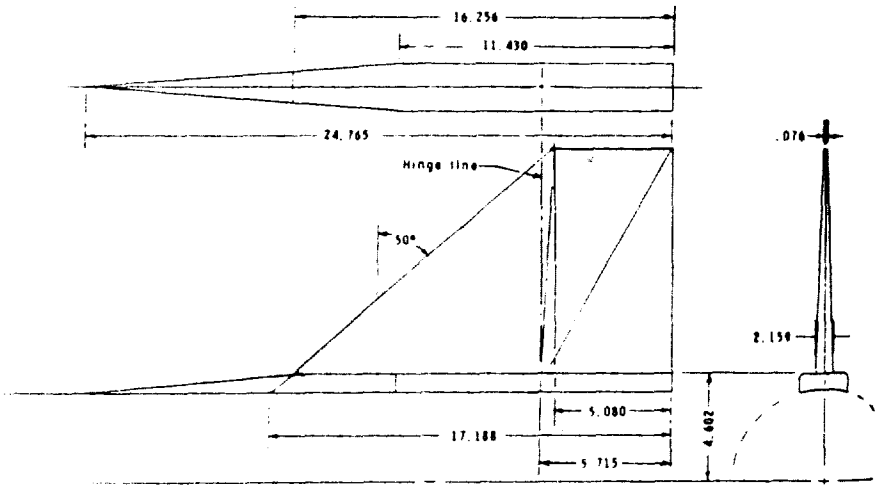

TAIL-SURFACE DETAILS

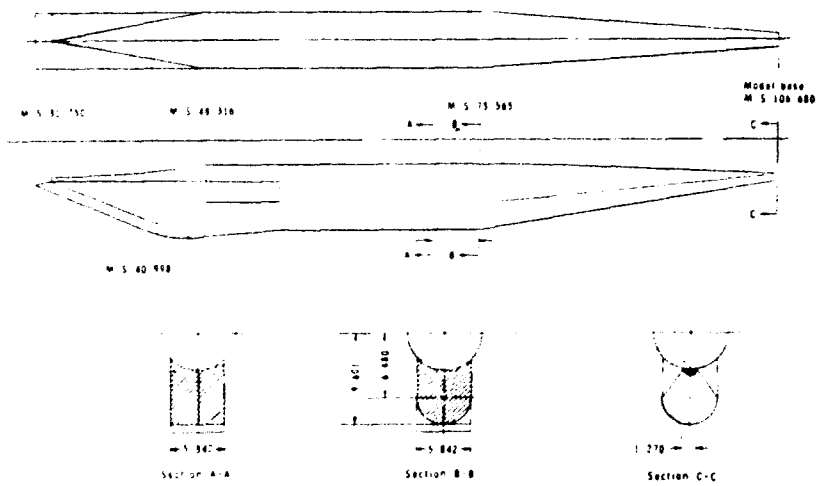

INLET-INLET FAIRING DETAILS

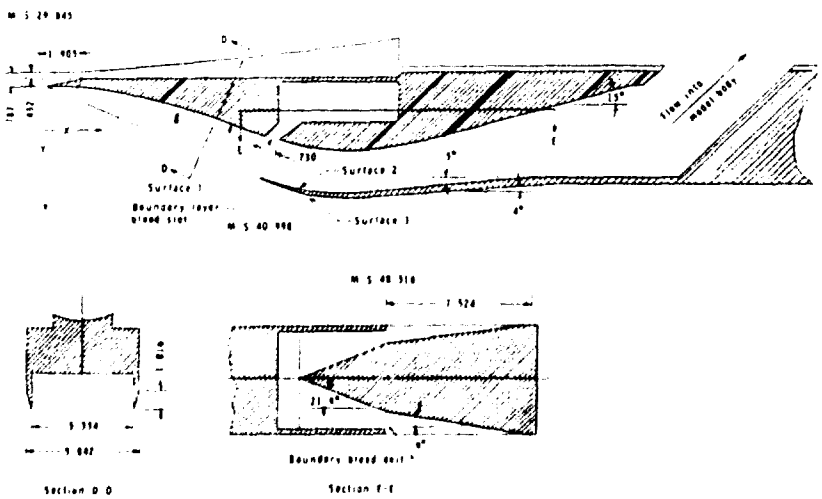

INLET DETAILS - 2X SIZE

Figure A-4 Example Problem 2 Tail/Inlet Details

```
                    THE USAF AUTOMATED MISSILE DATCOM * REV  4/91 *
                    AERODYNAMIC METHODS FOR MISSILE CONFIGURATIONS
                            CONERR - INPUT ERROR CHECKING

ERROR CODES - N* DENOTES THE NUMBER OF OCCURENCES OF EACH ERROR

A - UNKNOWN VARIABLE NAME

B - MISSING EQUAL SIGN FOLLOWING VARIABLE NAME

C - NON-ARRAY VARIABLE HAS AN ARRAY ELEMENT DESIGNATION - (N)

D - NON-ARRAY VARIABLE HAS MULTIPLE VALUES ASSIGNED

E - ASSIGNED VALUES EXCEED ARRAY DIMENSION

F - SYNTAX ERROR

   ******************************  INPUT DATA CARDS  ******************************

 1 *
 2 * USE DEFAULT REFERENCE AREA AND LENGTH
 3 *
 4  $REFQ XCG=53.34,$
 5 *
 6 * DEFINE FLIGHT CONDITIONS
 7 *
 8  $FLTCON NMACH=1.,MACH=0.6,REN=6.56E6,
 9          NALPHA=5.,ALPHA=0.,5.,10.,20.,25.,$
10 *
11 * DEFINE BODY
12 * NO BASE DRAG INCLUDED (DEXIT NOT INPUT)
13 *
14  $AXIBOD THOSE=OGIVE,LNOSE=22.86,DNOSE=7.62,                          ** SUBSTITUTING NUMERIC FOR NAME OGIVE
15          LCENTR=83.821,DCENTR=7.62,$
16 *
17 * DEFINE FINS
18 *
19  $FINSET1 SECTYP=HEX,SSPAN=4.062,13.97,CHORD=17.188,5.715,            ** SUBSTITUTING NUMERIC FOR NAME HEX
20           XLE=89.492,SWEEP=0.,STA=1.,NPANEL=3.,PHIF=0.,90.,270.,
21           SUPPER=0.1256,0.,LFLATU=0.,1.,LMAXU=0.665,0.,$
```

Figure A-5 Example Problem 2 Input

```
22 *
23 * DEFINE INLET GEOMETRY
24 *
25  $INLET  NIN=1.,INTYPE=2DTOP,XINLT=29.845,                    ** SUBSTITUTING NUMERIC FOR NAME 2DTOP
26          XDIV=1.905,LDIV=16.566,HDIV=0.432,
27          PHI=180.,
28          X=0.,11.153,14.812,45.72,76.835,
29          W=5.234,5.842,5.842,5.842,5.842,
30          H=0.,5.128,5.359,5.359,0.635,
31          COVER=.FALSE.,RAMP=15.0,$
32 *
33 * OPTIONS
34 *
35 CASEID MISSILE DATCOM EXAMPLE PROBLEM - SUBSONIC
36 SOSE
37 DIM CM
38 PART
39 SAVE
40 NEXT CASE
41 *
42 * CASE TWO - TRANSONIC
43 *
44 DELETE FLTCON
45  $FLTCON NMACH=1.,MACH=1.0,REN=6.56E6,
46          NALPHA=5.,ALPHA=0.,5.,10.,20.,25.,$
47 *
48 * OPTIONS
49 *
50 CASEID MISSILE DATCOM EXAMPLE PROBLEM - TRANSONIC
51 PRINT AERO HINGE
52 PRINT AERO BEND
53 SAVE
54 NEXT CASE
55 *
56 * CASE THREE - SUPERSONIC
57 *
58 DELETE FLTCON
59  $FLTCON NMACH=1.,MACH=3.95,REN=6.56E6,
60          NALPHA=5.,ALPHA=0.,5.,10.,20.,25.,$
61 *
62 * OPTIONS
63 *
64 CASEID MISSILE DATCOM EXAMPLE PROBLEM - SUPERSONIC
65 PRESSURES
66 NEXT CASE
```

Figure A-5 Example Problem 2 Input (Continued)

B. PLOT FILE FORMAT

When the PLOT control card is used, a formatted data file is written to unit 3 which can be used in a separate plotting program. The file produced has the following format:

LINE	COLUMN	CONTENT
1	1-3	Word RUN
	4-7	A sequential run number beginning with one (1) and incrementing by one (1)
	8-10	Number of angles of attack
	13	Units System: I-inches F-feet C-centimeters M-meters
	14-23	I.D. Field (see below)
2	1-10	Mach Number
	11-20	Reynolds Number/foot (or meter)
3	1-10	Reference Area
	11-20	Longitudinal Reference Length
	21-30	Longitudinal C.G. Location (X_{cg})
	31-40	Lateral Reference Length
	41-50	Vertical C.G. Location (Z_{cg})
4 (Repeated for each angle of attack)	1-10	Angle of Attack
	11-20	C_N or α_{TRIM}
	21-30	C_m or C_{NTRIM}
	31-40	C_A or C_{ATRIM}
	41-50	C_Y or C_{YTRIM}
	1-60	C_n or C_{nTRIM}
	1-70	C_l or C_{lTRIM}
LAST	1	Character R (denotes end of data for set)

The I.D. field identifies the configuration for which the data is applicable.

I.D. Code	Configuration/Condition
B	Body Alone
F1	Most forward fin set or fin set #1
F2	Second most forward fin set or fin set #2
F3	Third most forward fin set or fin set #3
F4	Fourth most forward fin set or fin set #4
BF1	Body plus most forward fin set
BF12	Body plus two most forward fin sets
BF13	Body plus three most forward fin sets
BF14	Body plus four most forward fin sets
Dn	Untrimmed data for deflection angle #n (n=1 to 10)
TRIMMED	Trimmed results

Component buildup data is written to the file if the BUILD control card is used. If the TRIM control card is used, both the trimmed and untrimmed results are output. Otherwise, only the final configuration data is output.

U.S. Government Printing Office: 1978