AD-A250 249

TATION PAGE

Form Approved
OMB No. 0704-0188

DATE October 21, 1991	3. REPORT TYPE AND DATES COVERED FINAL TECHNICAL 9/1/89 TO 8/31/91

4. TITLE AND SUBTITLE

Computer Derivation of Green's Functions for Structural Dynamic Analysis.

5. FUNDING NUMBERS

Contract No.
F49620-89-C-0112

6. AUTHOR(S)

Dr. James A. Fabunmi

7. PERFORMING ORGANIZATION NAME(S) AND ADDRESS(ES)

AEDAR Corporation
8401 Corporate Drive, Suite 460
Landover, MD. 20785

8. PERFORMING ORGANIZATION REPORT NUMBER

AEDAR-FTR-91-02

AFOSR-TR- 92 0342

9. SPONSORING/MONITORING AGENCY NAME(S) AND ADDRESS(ES)

United States Air Force Office of Scientific Research (AFOSR), Blg. 410
Bolling AFB
DC. 20332-6448

nm

10. SPONSORING/MONITORING AGENCY REPORT NUMBER

11. SUPPLEMENTARY NOTES

DTIC
ELECTE
MAY 1 4 1992
S D
D

12a. DISTRIBUTION/AVAILABILITY STATEMENT

Unlimited

12b. DISTRIBUTION CODE

This document has been approved for public release and sale; its distribution is unlimited.

13. ABSTRACT (Maximum 200 words)

This research program has been concerned with the development of a new generation of computer-aided techniques for the dynamic analysis of complex structural systems. These techniques which use powerful symbolic processors such as MACSYMA are expected to facilitate the derivation and analysis of Green's functions of interconnected distributed parameter structures. The present approach uses integral methods to combine the transfer functions of the baseline structure with those of discrete substructure attachments in order to obtain the transfer function of the interconnected system. This resultant transfer function is then transformed into a form which lends itself easily to inverse Laplace transformation, yielding the Green's function of the interconnected system. Such algebraic results are expected to improve the understanding of the effects of substructure attachments, e.g. active and passive vibration controllers, on the dynamics of large flexible structures.

14. SUBJECT TERMS

Structural Dynamics, Computer Algebra, Green's Functions

15. NUMBER OF PAGES
76

16. PRICE CODE

17. SECURITY CLASSIFICATION OF REPORT	18. SECURITY CLASSIFICATION OF THIS PAGE	19. SECURITY CLASSIFICATION OF ABSTRACT	20. LIMITATION OF ABSTRACT
UNCLASSIFIED	UNCLASSIFIED	UNCLASSIFIED	UNLIMITED

TITLE: COMPUTER DERIVATION OF GREEN'S FUNCTIONS FOR STRUCTURAL DYNAMIC ANALYSIS

(AFOSR Contract No. F49620-89-C-0112)

Principal Investigator: Dr. James A. Fabunmi

AEDAR Corporation
8401 Corporate Drive, Suite 460
Landover, MD 20785

ABSTRACT

This research program has been concerned with the development of a new generation of computer-aided techniques for the dynamic analysis of complex structural systems.These techniques which use powerful symbolic processors such as MACSYMA are expected to facilitate the derivation and analysis of Green's functions of interconnected distributed parameter structures. The present approach uses integral methods to combine the transfer functions of the baseline structure with those of discrete substructure attachments in order to obtain the transfer function of the interconnected system. This resultant transfer function is then transformed into a form which lends itself easily to inverse Laplace transformation, yielding the Green's function of the interconnected system. Such algebraic results are expected to improve the understanding of the effects of substructure attachments e.g. active and passive vibration controllers, on the dynamics of large flexible structures.

92-12616

92 5

SUMMARY

This final technical report provides a comprehensive, cumulative, and substantive summary of the progress and significant accomplishments achieved during the total period of the research carried out under the sponsorship of AFOSR Contract No. F49620-89-C-0112, awarded to AEDAR Corporation for the period September 1, 1989 to August 31, 1991. The research effort has addressed the issue of computer-algebraic techniques for analyzing complex interconnected flexible structures, and the application of such computer-algebraic tools to the analysis of distributed parameter structures to which discrete substructures have been attached. Using the benchmark structural system consisting of a uniform cantilevered Euler-Bernoulli beam with a spring-mass attachment, it was established that a Green's function for the combined structure can be derived algebraically, based on the Green's function of the baseline structure, and that of the attached substructure. The derived Green's function was shown to be consistent with a series representation consisting of contributions from the natural modes of the combined system. This fact was verified by comparing the results of the proposed approach to that obtained using the finite element method. Furthermore, by representing the effects of active structural controllers by functions which are analogous to those of attached discrete substructures, this technique was also used to study the system parameters of output feedback controlled structures, as well as the sensitivity of closed-loop modal parameters of controlled structures to sensor/actuator placement and feedback gains. Manuscripts of papers which have been submitted for journal publications are included in the appendix to this report.

Accesion For
NTIS CRA&I ☑
DTIC TAB ☐
Unannounced ☐
Justification
By
Distribution /
Availability Codes
Dist | Avail and / or Special
A-1

TABLE OF CONTENTS

		PAGE
I.	OBJECTIVES OF THE RESEARCH	1
II.	STATUS OF THE RESEARCH EFFORT	1
III.	LIST OF PUBLICATIONS	3
IV.	PROFESSIONAL PERSONNEL	3
V.	INTERACTIONS	3

APPENDIX I - Manuscript of paper entitled:
"Derivation of Green's Functions for Distributed Parameter Structures Modified by Discrete Substructure Attachment Using Computer Algebra."

APPENDIX II - Manuscript of paper entitled:
"System Parameters of Output Feedback Controlled Flexible Structures."

APPENDIX III - Manuscript of paper entitled:
"Sensitivity of Closed-Loop Modal Parameters of Controlled Structures to Sensor/Actuator Placement and Feedback Gains."

I. OBJECTIVES OF THE RESEARCH

The objectives of the research effort were:

(1) To develop computer-algebraic techniques (using MACSYMA) for analyzing the Green's functions of interconnected structural systems, e.g. uniform beams which have been modified by the attachment of spring-mass substructures at discrete locations.

(2) To evaluate the accuracy, effectiveness and generality of these methods by comparing results with those obtained using more conventional approaches, such as the finite element method.

(3) To apply the developed techniques to the analysis of the effects of active controllers on distributed parameter structural systems.

II. STATUS OF THE RESEARCH EFFORT

For simple structures such as uniform Euler-Bernoulli beams and flat plates, the Green's functions can be derived directly from the partial differential equations subject to appropriate boundary conditions. In some cases the expression for the Green's function is obtained in a closed but "split" form (i.e. the expression takes different forms for response locations that lie on different sides of the excitation location); however, the more general derivations result in an infinite series of terms contributed by the characteristic functions and parameters of the system. Practical structures are usually more complicated, and in general may not lend themselves to direct derivation of the Green's functions. In many instances, it is possible to idealize the real structural system by an interconnection of simpler structures. Many authors have examined the problem of calculating the free vibration modes and frequencies of simple beams with discrete attachment of lumped parameter substructures. In calculating the free vibration modes and frequencies of the combined system, some authors have utilized the Green's function of the unmodified beam. These efforts did not address the derivation of the Green's functions of the combined system, which are suitable for the forced response analysis.

General methods for obtaining the Green's functions of interconnected structural systems, using integral equations and generalized functions to combine the Green's functions of the constituent structures are available. These techniques accept the Green's functions of the substructures in whatever analytical form that they are available. However, because of the algebraic manipulations necessary to obtain the final result, the manual implementations of these methods have been restricted to simple interconnections. In order to deal with more realistic situations, which may involve multiple interconnections, this research has explored the utilization of computer algebraic approaches to this problem. With computer algebra the implementation of this technique becomes feasible for any baseline structure for which the Green's function is available, and for any number of arbitrary interconnections, provided the appropriate functions are available for representing the response/excitation relationships. Because the final form of the Green's function of the combined system may be very complicated, it is desirable to have a form for the Green's function which displays the contributions of the characteristic modes of the system, and from which these functions and parameters can be extracted when needed. In this research, the example of the cantilever beam with a spring-mass attachment has been used to illustrate the proposed approach.

For dynamical systems governed by differential equations of the Sturm-Liouville class, spectral techniques were used to derive the Green's functions as an infinite series of contributions from the set of basis functions, which are obtained from the homogeneous equation. If the Green's function of the combined dynamical system is assumed to retain this algebraic form, then the expressions obtained by integral methods can be manipulated algebraically to yield the basis functions and characteristic parameters which correspond to the combined system. When the combined dynamical system is undamped (i.e both the baseline structure and the attachments contain no dissipative elements), these basis functions and characteristic parameters yield the free vibration modes and frequencies of the combined structure. But when the baseline structure and/or the attachments include damping, methods that calculate the free vibration modes and frequencies directly are not applicable, since there are no free vibrations, and the method of separation of variables (which is necessary for such methods to work), is no longer feasible. This problem does not arise if the Green's function of the combined system is obtained first, using integral methods. The basis functions and characteristic parameters that are obtained using the derivations developed in this research, would then correspond to the complex modes and parameters that would be obtained if a modal parameter extraction were performed for the damped system.

III. LIST OF PUBLICATIONS

(1) Fabunmi, J.A., Chang, P.C., "Derivation of Green's Functions for Distributed Parameter Structures Modified by Discrete Substructure Attachment Using Computer Algebra." Submitted to: AIAA Journal and AIAA/ASME/ASCE/AHS/ASCE 33rd Structures, Structural Dynamics and Materials Conference. (See Appendix I)

(2) Fabunmi, J.A., "System Parameters of Output Feedback Controlled Flexible Structures." Submitted to: Journal of Intelligent Material Systems and Structures. (See Appendix II)

(3) Fabunmi, J.A., "Sensitivity of Closed-Loop Modal Parameters of Controlled Structures to Sensor/Actuator Placement and Feedback Gains." Submitted to: AIAA Journal of Guidance, Control and Dynamics, and AIAA/ASME/ASCE/AHS/ASCE 33rd Structures, Structural Dynamics and Materials Conference. (See Appendix III)

IV. PROFESSIONAL PERSONNEL

(1) Dr. James A. Fabunmi, Research Scientist and President, AEDAR Corporation, Landover, MD.

(2) Dr. Peter C. Chang, Associate Professor of Civil Engineering, University of Maryland, College Park, MD, Consulting Research Associate, AEDAR Corporation, Landover, MD.

(3) Mr. Frederick Fergusson, Mathematician, AEDAR Corporation, Landover, MD.

V. INTERACTIONS

(1) The application of the computer algebraic techniques to the study of active controller effects was supported in part by a subcontract from Clark Atlanta University, under a separate contract from the Air Force Office of Scientific Research. The prime contractor was Clark Atlanta University, and the Principal Investigator was Mr. Kwabena Bota.

(2) Dr. James A. Fabunmi made a presentation on "Computer Derivation of Green's Functions for Structural Dynamic Analysis", at the 8th AFOSR Forum on Space Structures, June 18-20, 1990 in Florida.

APPENDIX I - Manuscript of paper entitled:
"Derivation of Green's Functions for Distributed Parameter Structures Modified by Discrete Substructure Attachment Using Computer Algebra."

DERIVATION OF GREEN'S FUNCTIONS FOR DISTRIBUTED PARAMETER STRUCTURES MODIFIED BY DISCRETE SUBSTRUCTURE ATTACHMENT USING COMPUTER ALGEBRA

Fabunmi, J. [1] and Chang, P. [2]

INTRODUCTION

Large interconnected space structures which are deployed for applications in low-to-zero gravity environments have posed new challenges to structural dynamicists, not so much because of their physical size and the operating environment, but mainly because of the need for precise control of their motions. The stringent specifications on the vibrations (jitter) which can be tolerated during operation make it important to have good analytical models which can facilitate the design of active controllers which are used to suppress unwanted vibrations. Because of the need to include higher order elastic modes in the dynamical analysis, numerical techniques (e.g. Finite Element Method) usually involve large order matrices which are susceptible to ill conditioning, which may lead to unanticipated losses in accuracy. Alternative approaches which try to avoid the problem of large order matrices, involve the derivation of Green's functions (also known as impulse response functions) for the structural system. These approaches permit the treatment of the structure as a distributed parameter system, thereby avoiding the manipulation of large order matrices. The response of the structure at a given coordinate due to excitation at another, is calculated directly without the inversion of matrices. The forced response of the structure due to an arbitrary excitation force, is simply obtained as the convolution integral between the Green's function and the excitation force.

For simple structures such as uniform Euler-Bernoulli beams and flat plates, the Green's functions can be derived directly from the partial differential equations subject to appropriate boundary conditions [Bishop 1960], [Butkovskiy 1982], [Chen 1966]. In some cases the expression for the Green's function is obtained in a closed but "split" form [Bishop] (i.e. the expression takes different forms for response locations that lie on different sides of the excitation location); however, the more general derivations result in an infinite series of terms contributed by the characteristic functions and parameters of the system. Practical structures are usually more complicated, and in general may not lend themselves to direct derivation of the Green's functions. In many instances, it is possible to idealize the real structural system by an interconnection of simpler structures. Many authors have examined the problem of calculating the free vibration modes and frequencies of simple beams with discrete attachment of lumped parameter substructures [Strutt and Rayleigh 1945], [Young 1948], [Bisplinghoff 1955], [Bishop 1960], [Dowell 1979], [Nicholson

[1] President, AEDAR Corporation, 8401 Corporate Drive, Suite 406, Landover, MD 20785.

[2] Associate Professor of Civil Engineering, University of Maryland, College Park, MD 20742.

and Bergman 1986], [Broome 1989], to name just a few. In calculating the free vibration modes and frequencies of the combined system, some authors have utilized the Green's function of the unmodified beam [Nicholson and Bergman], [Broome], and [Wickert and Mote 1990]. These efforts did not address the derivation of the Green's functions of the combined system, which are suitable for the forced response analysis.

General methods for obtaining the Green's functions of interconnected structural systems, using integral equations and generalized functions to combine the Green's functions of the constituent structures, have been published by [Butkovskiy 1983]. These techniques accept the Green's functions of the substructures in whatever analytical form that they are available. However, because of the algebraic manipulations necessary to obtain the final result, the manual implementations of these methods have been restricted to simple interconnections. In order to deal with more realistic situations, which may involve multiple interconnections, this research has explored the utilization of computer algebraic approaches to this problem. With computer algebra [Pavelle 1985], [Rand 1984] (e.g. MACSYMA), the implementation of Butkovskiy's technique becomes feasible for any baseline structure for which a Green's function is available, and for any number of arbitrary interconnections, provided the appropriate functions are available for representing the response/excitation relationships. Because the final form of the Green's function of the combined system may be very complicated, it is desirable to have a form for the Green's function which displays the contributions of the characteristic modes of the system, and from which these functions and parameters can be extracted when needed. In this paper, the well-studied example of the cantilever beam with a spring-mass attachment has been used to illustrate the proposed approach.

For dynamical systems governed by differential equations of the Sturm-Liouville class, spectral techniques can be used to derive the Green's functions as an infinite series of contributions from the set of basis functions, which are obtained from the homogeneous equation [Keener 1988]. If the Green's function of the combined dynamical system is assumed to retain this algebraic form, then the expressions obtained by Butkovkyi's method can be manipulated algebraically to yield the basis functions and characteristic parameters which correspond to the combined system. When the combined dynamical system is undamped (i.e. both the baseline structure and the attachments contain no dissipative elements), these basis functions and characteristic parameters yield the free vibration modes and frequencies of the combined structure. But when the baseline structure and/or the attachments include damping, methods that calculate the free vibration modes and frequencies directly e.g. [Nicholson] are not applicable, since there are no free vibrations, and the method of separation of variables (which is necessary for such methods to work), is no longer feasible. This problem does not arise if the Green's function of the combined system is obtained first, using the methods proposed by Butkovskiy. The basis functions and characteristic parameters that are obtained using the derivations presented in this paper, would then correspond to the complex modes and parameters that would be obtained if a modal parameter extraction were performed for the damped system.

The remainder of this paper has been organized as follows. First the spectral form

of the Green's functions for systems governed by equations of the Sturm-Liouville class. are presented; followed by the result of Butkovskiy's method for obtaining the Laplace Transform of the Green's function of a combined dynamical system which consists of a distributed parameter baseline structure to which a lumped parameter substructure has been attached. The derivations of the algebraic algorithms for obtaining the modified characteristic parameters and characteristic functions are then presented. This is followed by a number of examples which consider the well-studied case of a cantilever beam and a spring-mass attachment at the tip. These examples are used to confirm that the characteristic parameters and functions recovered by these algorithms do indeed agree with those given by Young [1948], and the finite element method.

Spectral Form for Green's Functions of Sturm-Liouville Systems

Let the response of a distributed parameter dynamical system to excitation $w(x_1, t)$ be $Q(x_2, t)$; $x_1 \in M_1$, $x_2 \in M_2$, $t \in \Omega$; where M_1 and M_2 are sets of spatial variables of the excitation and response signals, respectively, and Ω is an interval of time $[t_0, t_1]$. The partial differential equation of motion can be written as:

$$L_{x,t}\{Q(x_2, t)\} = w(x_1, t). \tag{1}$$

where $L_{x,t}\{\}$ is a partial differential operator of the form:

$$L_{x,t}\{\} = L(x, \partial/\partial x)\{\} - \lambda(\partial/\partial t)\{\}. \tag{2}$$

By defining a Green's function which satisfies the following equation:

$$L_{x,t}\{G(x, \xi, t, \tau)\} = \delta(x - \xi)\delta(t - \tau), \tag{3}$$

the solution to Eq.(1) is given directly by:

$$Q(x_2, t) = \int_{\Omega}\int_{M_1} G(x_2, \xi, t, \tau) w(\xi, \tau) d\xi d\tau. \tag{4}$$

For stationary systems, $G(x, \xi, t, \tau)$ is of the form $G(x, \xi, t - \tau)$, and the Laplace transform of Eq.(3) gives:

$$(L(x, \partial/\partial x) - \lambda(p))\{W(x, \xi, p)\} = \delta(x - \xi), \tag{5}$$

where $p = \sigma + i\omega$ is the Laplace variable, and $W(x, \xi, p)$ is the Laplace transform of $G(x, \xi, t - \tau)$. Although Eq.(5) gives $W(x, \xi, p)$ the right to be called a Green's function, it is convenient to distinguish it from $G(x, \xi, t - \tau)$ by using the term "transfer function," since this is consistent with common practice in control theory. In this paper, as was done in [Butkovskiy], $G(x, \xi, t - \tau)$ will be called the Green's function, and $W(x, \xi, p)$, the transfer function. $G(x, \xi, t - \tau)$ and $W(x, \xi, p)$ form a Laplace transform pair.

For simple structures such as uniform beams, $W(x, \xi, p)$ is available in a closed but "split" form [Bishop], however the inverse Laplace transform of this form is not a simple expression. It is of interest to formulate a more general form for $W(x, \xi, p)$ which is not only applicable to a broader class of structures, but also for which the inverse Laplace transform is a straightforward expression. If $\psi_k(x)$ and $\lambda(p_k)$ are the characteristic function and characteristic parameter of the following eigen-value equation: for $k = 1, 2, \ldots, \infty$, subject to the appropriate boundary conditions;

$$L(x, \partial/\partial x)\{\psi(x)\} = \lambda(p)\psi(x). \tag{6}$$

It has been shown [Keener], [Fabunmi 1989], that for systems governed by differential equations of the Sturm-Liouville class, the transfer function is of the form

$$W(x, \xi, p) = \sum_{k=1}^{\infty} \frac{\psi_k(x)\psi_k(\xi)}{\lambda(p_k) - \lambda(p)}. \tag{7}$$

If for example $\lambda(p) = -\beta^2 p^2$, as is the case for a uniform beam where $\beta^2 = \rho A$, the mass per unit length [Timoshenko], the Green's function given by the inverse Laplace transform of Eq.(7) is simply:

$$G(x, \xi, t) = \frac{1}{\beta^2} \sum_{k=1}^{\infty} \frac{1}{ip_k} \psi_k(x)\psi_k(\xi) \sin ip_k t. \tag{8}$$

Transfer Function for Combined Distributed Parameter System with Lumped Parameter Attachment

Consder a lumped parameter substructure governed by the constant coefficient ordinary differential equation:

$$W_c(d/dt)\{Q_c(t)\} = w_c(t), \tag{9}$$

where $w_c(t)$ is the applied excitation at the attachment point, $Q_c(t)$ is the response of the substructure at the attachment point, and $W_c(d/dt)$ is the differential operator with constant coefficients. By taking the Laplace transform of Eq.(9), an algebraic equation is obtained which can be used to obtain the ratio of the Laplace transforms of the excitation force to the response, as:

$$\frac{w_c(p)}{Q_c(p)} = W_c(p). \tag{10}$$

If the coordinate of attachment of this substructure to the distributed parameter baseline structure is $x = b$, the new transfer function for the combined system has been shown by Butkovskiy [1983] to be:

$$W_1(x,\xi,p) = W_0(x,\xi,p) + \frac{W_0(x,b,p)W_0(b,\xi,p)}{1/W_c(p) - W_0(b,b,p)}, \tag{11}$$

where $W_0(x,\xi,p)$ is the transfer function of the unmodified structure, and $W_1(x,\xi,p)$ is that of the combined system. The expression given by Eq.(11) is an exact relationship between the baseline transfer function and the transfer function of the combined system. If the baseline transfer function is available in exact form, the transfer function of the combined structure will also be obtained exactly, using Eq.(11). However, it is still necessary to obtain the inverse Laplace transform of the transfer function in order to obtain the Green's function. Using the results of the preceding section, if the transfer function is transformed into its spectral version, the inverse Laplace transform is easier to obtain. The loss of accuracy implied by the truncation of the infinite series in the spectral version is really not that much of a problem in a computer algebraic environment, since it is feasible to include an algebraic routine which checks the relative contribution of each additional term in the series, and terminates the computation when a desired accuracy is obtained.

The next section presents the formulation for the algebraic algorithms which were used to transform the transfer function of the combined system into the spectral form, by deriving the characteristic parameters and characteristic functions which correspond to the transfer function obtained in Eq.(11).

Algebraic Algorithms for Modified Characteristic Parameters and Functions

Let the transfer function of the baseline system be given by:

$$W_0(x,\xi,p) = \sum_{k=1}^{\infty} \frac{\psi_{ok}(x)\psi_{ok}(\xi)}{p^2 - p_{0k}^2} \cdot \frac{1}{\beta_{ok}^2}. \tag{12}$$

The purpose of the algebraic algorithms proposed in this paper, is to recover from Eq.(11) the transfer function of the combined system in a form similar to Eq.(12). This is done by deriving the appropriate functions and parameters which correspond to the combined system; i.e. the task is to find ψ_{1k}, p_{1k} and β_{1k}^2, $k = 1, 2, \ldots, \infty$, such that the result given in Eq.(11) is equivalent to an expression of the form:

$$W_1(x, \xi, p) = \sum_{k=1}^{\infty} \frac{\psi_{1k}(x)\psi_{1k}(\xi)}{p^2 - p_{1k}^2} \cdot \frac{1}{\beta_{1k}^2}. \tag{13}$$

Note that in order to retain the general form of the transfer function, a new set of basis function needs to be used. The characteristic parameters of the updated system $p_{1k}, k = 1, 2, \ldots$ are the roots of the equation:

$$\frac{1}{W_c(p)} - W_0(b, b, p) = 0. \tag{14}$$

Computer algebra is used to expand and simplify the left hand side of Eq.(14) into a ratio of polynomials in p, the numerator of which is then made the argument of an algebraic routine that isolates all its real and complex roots.

Let the kth updated basis function be expanded in terms of the previous set of basis functions:

$$\psi_{1k}(x) = \sum_{n=1}^{\infty} \alpha_{kn}\psi_{0n}(x). \tag{15}$$

The objective of this algorithm is to derive the coefficients α_{kn}, using information obtainable from the characteristic parameters and the previous set of basis functions. Direct substitution of (15) into (13) gives:

$$W_1(x, \xi, p) = \sum_{k=1}^{\infty}\sum_{n=1}^{\infty}\sum_{m=1}^{\infty} \frac{\alpha_{kn}\alpha_{km}\psi_{0n}(x)\psi_{0m}(\xi)}{p^2 - p_{1k}^2} \cdot \frac{1}{\beta_{1k}^2}. \tag{16}$$

Let $Z_n(p)$ be defined as

$$Z_n(p) \equiv \int_M \int_M \left[W_o(x, \xi, p) + \frac{W_o(x, b, p)W_o(b, \xi, p)}{1/W_c(p) - W_o(b, b, p)}\right] \psi_{on}(x)\psi_{on}(\xi)dxd\xi. \tag{17}$$

Performing this integral gives

$$Z_n(p) = \frac{1}{\beta_{on}^2}\left\{\frac{1}{p^2 - p_{on}^2} + \frac{W_c(p)(p + p_{1k})}{(p^2 - p_{1k}^2)H_k(p)W_o(b,b,p)} \cdot \left[\frac{\psi_{on}(b)}{p^2 - p_{on}^2}\right]^2\right\}: \tag{18}$$

where

$$H_k(p) = \frac{1}{p - p_{1k}} \cdot \left[\frac{1}{W_o(b,b,p)} - W_c(p)\right] \tag{19}$$

Performing the integral operation of (17) by using (11) and (16), and ultilizing the orthonormality of the basis vectors ψ_{on}, we get

$$\int_M \int_M \sum_{k=1}^{\infty}\sum_{n=1}^{\infty}\sum_{m=1}^{\infty} \frac{\alpha_{kn}\alpha_{km}\psi_{0n}(x)\psi_{0m}(\xi)}{p^2 - p_{1k}^2} \cdot \frac{1}{\beta_{1k}^2}\psi_{0n}(x)\psi_{0n}(\xi)dxd\xi = \sum_{k=1}^{\infty} \frac{\alpha_{kn}^2}{p^2 - p_{1k}^2}\frac{1}{\beta_{1k}^2}. \tag{20}$$

By virtue of the equivalence of (11) and (16), it follows from (17) and (20) that:

$$\sum_{k=1}^{\infty} \frac{\alpha_{kn}^2}{p^2 - p_{1k}^2} \cdot \frac{1}{\beta_{1k}^2} = Z_n(p). \tag{21}$$

One way of obtaining α_{kn} from (21) is to express $Z_n(p)$ as a ratio of polynomial functions of p;

$$Z_n(p) = \frac{{}_N Z_n(p)}{{}_D Z_n(p)}. \tag{22}$$

Let

$${}_D Z_{kn}(p) = \frac{{}_D Z_n(p)}{(p^2 - p_{1k}^2)}. \tag{23}$$

then,

$$\frac{\alpha_{kn}^2}{\beta_{1k}^2} = \lim_{p \to p_{1k}} \frac{{}_N Z_n(p)}{{}_D Z_{kn}(p)}. \tag{24}$$

If all the functions of p appearing in (18) and (19) are expressed as ratios of polynomials in p, i.e.

$$
\begin{aligned}
W_c(p) &= {}_N W_c(p)/{}_D W_c(p), \\
W_o(b,b,p) &= {}_N W_o(p)/{}_D W_o(p), \\
H_k(p) &= {}_N H_k(p)/{}_D H_k(p).
\end{aligned} \tag{25}
$$

It follows that

$$
\begin{aligned}
{}_N Z_n(p) =& (p^2 - p_{1k}^2)(p^2 - p_{on}^2){}_D W_c(p){}_N W_o(p){}_N H_k(p) \\
&+ (p + p_{1k})\psi_{on}(b)^2 {}_N W_c(p){}_D W_o(p){}_D H_k(p),
\end{aligned} \tag{26}
$$

and

$$
{}_D Z_n(p) = (p^2 - p_{1k}^2)(p^2 - p_{on}^2)_D^2 W_c(p){}_N W_o(p){}_N H_k(p); \tag{27}
$$

so that

$$
{}_D Z_{kn}(p) = (p^2 - p_{on}^2)_D^2 W_c(p){}_N W_o(p){}_N H_k(p), \tag{28}
$$

which gives

$$
\frac{\alpha_{kn}^2}{\beta_{1k}^2} = \frac{2p_{1k}\psi_{on}(b)^2 W_c(p_{1k})}{(p_{1k}^2 - p_{on}^2)^2 W_o(b,b,p_{1k}) H_k(p_{1k})} \cdot \frac{1}{\beta_{on}^2}. \tag{29}
$$

Eq.(14) insures that $H_k(p_{1k})$ does not vanish. The computation of (29) should be unproblematic. The implication of p_{1k} having the same value as p_{on} is simply that the kth basis function of the modified system is identical to the nth basis function of the baseline system. As for the vanishing of $W_o(b,b,p_{1k})$ which can occur only if the attachment point of the substructure happens to be an immobile point on the baseline structure, it is obvious that the attached substructure will not affect the dynamics of the system.

The basis functions $\psi_{1k}(x)$ of the modified structure are usually normalized such that

$$
\int_0^L \psi_{1k}(x)^2 dx = 1; \tag{30}
$$

which implies that

$$
\sum_{n=1}^{\infty} \alpha_{kn}^2 = 1. \tag{31}
$$

This condition leads to the determination of β_{1k}^2 as

$$\beta_{1k}^2 = \frac{1}{\sum_{n=1}^{\infty}(\alpha_{kn}^2/\beta_{1k}^2)}. \tag{32}$$

In general, the coefficients α_{kn} are complex valued. The result obtained from (29) subject to (31) only yields the moduli of α_{kn}. In order to determine the phase of α_{kn} (i.e. the real and imaginary parts of α_{kn}), it is necessary to invoke additional requirements on α_{kn}. For systems without dissipation, it is reasonable to require the modified functions to describe the unforced motions of the system, i.e.

$$\psi_{1k}(x) = W_o(x, b, p_{1k})W_c(p_{1k})\psi_{1k}(b). \tag{33}$$

Upon expanding (33) in terms of the baseline functions and the transformation coefficients, we get:

$$\alpha_{kn} = \sum_{m=1}^{\infty} \frac{W_c(p_{1k})}{\beta_{on}^2(p_{1k}^2 - p_{on}^2)} \cdot \alpha_{km}\psi_{om}(b)\psi_{on}^*(b). \tag{34}$$

Define an objective function:

$$h_k \equiv \sum_{n=1}^{\infty} \|\alpha_{kn} - \frac{W_c(p_{1k})\psi_{on}^*(b)}{\beta_{on}^2(p_{1k}^2 - p_{on}^2)} \cdot \sum_{m=1}^{\infty} \alpha_{km}\psi_{om}(b)\|^2. \tag{35}$$

Any convenient routine can be used to seek the phases of the $\alpha's$ such that h_k is a minimum. For undamped systems, an absolute minimum of zero (within limits of machine error) should be achievable, whereas for damped systems, the minimum of h_k may not be zero. However, this method suggests that the answer should approach the undamped case when the modified characteristic functions are real.

Example

A cantilever beam with a spring and mass attached to the free end is analyzed for different values of the spring constant and mass (Fig.1).

This example is selected because the results can be compared to results obtained by [Young]. The location of the spring mass attachment was chosen to be $b/L = 1.0$. The spring stiffness K was chosen to have the ratios $K/K_b = 0.101$, 1.010, 10.101, and 50.505; where $K_b = 3EI/L^3$ is the stiffness of the cantilever beam. The mass M was selected to have the ratio $M/(\rho AL) = 0$, 0.1, and 1; where ρ = density of the material; A = cross sectional area of the beam, and L is its length.

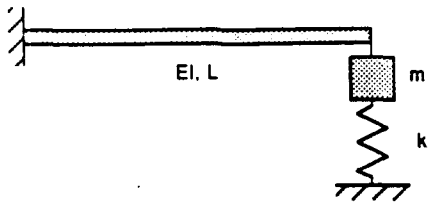

Figure 1 - Schematic Diagram of Beam with Spring-Mass attachment

Five combinations of spring-mass attachments as shown in Table 1 were used. The results were compared to results of a finite element analysis using three different meshes as well as results obtained by Young [1948].

Table 1 - Spring Constants and Masses of Modified Structures.

Modified Structure	K/K_b	$M/(\rho AL)$
1	0.101	0.1
2	1.010	0.1
3	0.101	1
4	10.101	0
5	50.505	0

The comparison of natural frequencies generated by the proposed method, the finite element method, and the method outlined by Young [48] are shown in Tables 2 through 6. The nondimensional values shown in the these tables are the ratio between the frequencies calculated and the fundamental natural frequency of the cantilever beam without attachements.

Table 2 - Comparison of Frequencies for Modified Structure 1 Recovered from the Transfer Function, Young's Method, and the Finite Element Method with Different Mesh Definition.

Mode	F.E. (2 elem)	F.E. (10 elem)	F.E. (50 elem)	Young's Method	Proposed Method
1	0.820	0.886	0.888	0.886	0.885
2	4.528	5.479	5.532	N/A	5.516
3	240	15.63	16.40	N/A	15.87

Table 3 - Comparison of Frequencies for Modified Structure 2 Recovered from the Transfer Function, Young's Method, and the Finite Element Method with Different Mesh Definition.

Mode	F.E. (2 elem)	F.E. (10 elem)	F.E. (50 elem)	Young's Method	Proposed Method
1	1.104	1.187	1.190	1.190	1.188
2	4.69	5.51	5.56	N/A	5.55
3	240	15.64	16.43	N/A	15.88

Table 4 - Comparison of Frequencies for Modified Structure 3 Recovered from the Transfer Function, Young's Method, and the Finite Element Method with Different Mesh Definition.

Mode	F.E. (2 elem)	F.E. (10 elem)	F.E. (50 elem)	Young's Method	Proposed Method
1	0.456	0.467	0.467	0.470	0.465
2	4.315	4.635	4.643	N/A	4.644
3	240	246	11.6	N/A	14.7

Table 5 - Comparison of Frequencies for Modified Structure 4 Recovered from the Transfer Function, Young's Method, and the Finite Element Method with Different Mesh Definition.

Mode	F.E. (2 elem)	F.E. (10 elem)	F.E. (50 elem)	Young's Method	Proposed Method
1	2.825	2.867	2.869	2.881	2.873
2	4.921	7.021	7.142	N/A	7.134
3	240	17.38	17.89	N/A	17.85

Table 6 - Comparison of Frequencies for Modified Structure 5 Recovered from the Transfer Function, Young's Method, and the Finite Element Method with Different Mesh Definition.

Mode	F.E. (2 elem)	F.E. (10 elem)	F.E. (50 elem)	Young's Method	Proposed Method
1	4.029	3.985	3.983	3.982	3.990
2	7.430	9.923	9.993	N/A	10.117
3	240	18.65	19.24	N/A	19.37

Expressions (36), (37) and (38) are the algebraic results derived for the first, second and third modes of the modified structure Number 5, based on the spectral expansion of Eq.(15).

$$
\begin{aligned}
\psi_{11}(x) = \; & 2.027e^{-4}\left(-\sin(0.14x) + \cos(0.14x) - e^{-0.14x}\right) \\
& - 5.645e^{-4}\left(-\sin(0.11x) + \cos(0.11x) - e^{-0.11x}\right) \\
& + 3.267e^{-6}\left(-1288\ [-\sinh(0.079x) + \sin(0.079x)]\right. \\
& \left. + 1289\ [-\cosh(0.079x) + \cos(0.079x)]\right) \\
& - 1.004e^{-3}\left(-54.636\ [-\sinh(0.046x) + \sin(0.047x)]\right. \\
& \left. + 53.645\ [-\cosh(0.047x) + \cos(0.047x)]\right) \\
& - 0.02033\left(-3.04\ [-\sinh(0.019x) + \sin(0.012x)]\right. \\
& \left. + 4.14\ [-\cosh(0.019x) + \cos(0.012x)]\right)
\end{aligned}
\tag{36}
$$

$$
\begin{aligned}
\psi_{12}(x) = & -3.782e^{-4}\left(-\sin(0.17x)+\cos(0.17x)-e^{-0.17x}\right) \\
& +8.650e^{-4}\left(-\sin(0.14x)+\cos(0.14x)-e^{-0.14x}\right) \\
& -2.533e^{-3}\left(-\sin(0.11x)+\cos(0.11x)-e^{-0.11x}\right) \\
& +1.932e^{-5}\left(-1288\ [-\sinh(0.079x)+\sin(0.079x)]\right. \\
& \left.+1289\ [-\cosh(0.079x)+\cos(0.079x)]\right) \\
& +1.530e^{-3}\left(-54.636\ [-\sinh(0.046x)+\sin(0.047x)]\right. \\
& \left.+53.645\ [-\cosh(0.047x)+\cos(0.047x)]\right) \\
& -0.01238\left(-3.04\ [-\sinh(0.019x)+\sin(0.012x)]\right. \\
& \left.+4.14\ [-\cosh(0.019x)+\cos(0.012x)]\right)
\end{aligned} \tag{37}
$$

$$
\begin{aligned}
\psi_{13}(x) = & \ 4.749e^{-4}\left(-\sin(0.17x)+\cos(0.17x)-e^{-0.17x}\right) \\
& -1.144e^{-3}\left(-\sin(0.14x)+\cos(0.14x)-e^{-0.14x}\right) \\
& +4.079e^{-3}\left(-\sin(0.11x)+\cos(0.11x)-e^{-0.11x}\right) \\
& +7.411e^{-5}\left(-1288\ [-\sinh(0.079x)+\sin(0.079x)]\right. \\
& \left.+1289\ [-\cosh(0.079x)+\cos(0.079x)]\right) \\
& -3.529e^{-4}\left(-54.636\ [-\sinh(0.046x)+\sin(0.047x)]\right. \\
& \left.+53.645\ [-\cosh(0.047x)+\cos(0.047x)]\right) \\
& +0.004103\left(-3.04\ [-\sinh(0.019x)+\sin(0.012x)]\right. \\
& \left.+4.14\ [-\cosh(0.019x)+\cos(0.012x)]\right)
\end{aligned} \tag{38}
$$

These expressions are plotted and compared to the result of the finite element analysis using 50 elements. It can be observed that the proposed method predicts the mode shapes and frequencies of the modified structure accurately. It can therefore be concluded that Eq. (13) is the correct transfer function of the modified structure.

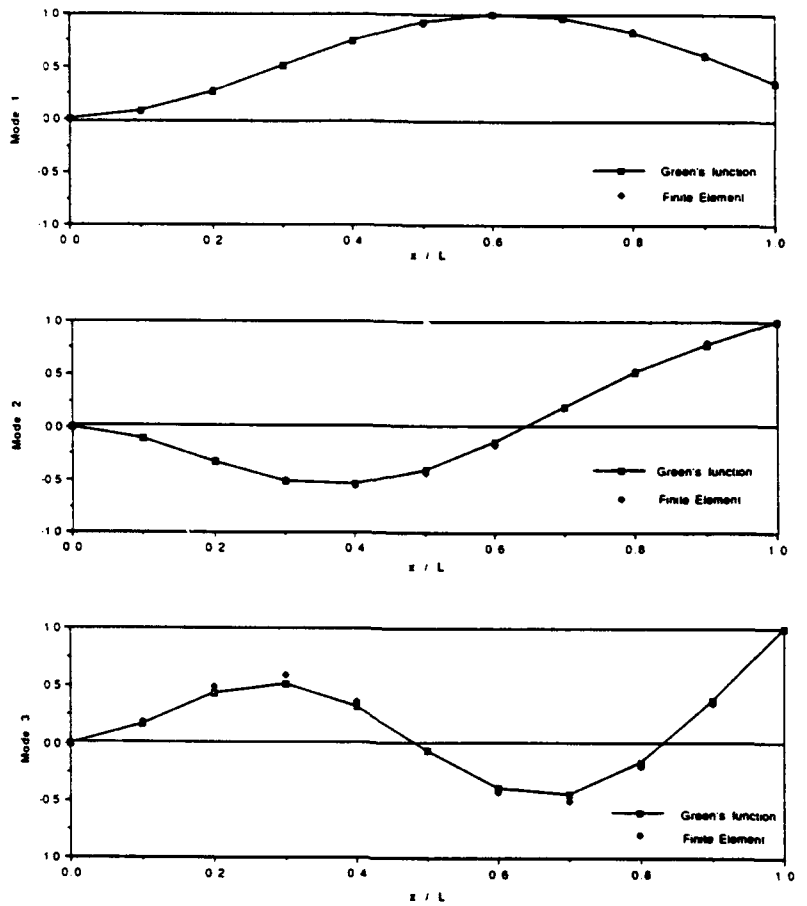

Figure 2 - Comparison of Mode Shapes Predicted by the Proposed and the Finite Element Methods.

Conclusions

This paper has presented a method which utilizes computer algebra to derive the Green's funtion of a combined dynamical system consisting of a distributed parameter baseline structure to which a discrete substructure has been attached. The general form of the Green's functions of systems governed by Sturm-Liouville type differential equations has been used to recover the characteristic functions and characteristic parameters of the combined system from the expressions obtained for the Green's functions using methods based on a general theory of interconnected distributed parameter systems. Examples of a uniform cantilever beam with discrete spring-mass attachments were used to confirm the agreement of the extracted parameters and functions with other methods such as the finite element method.

References

Bishop, R.E.D. and Johnson, D.C., *The Mechaniccs of Vibration*, Cambridge University Press, 1960.

Bisplinghoff, R.L., Ashley, H., and Halfman, R.C., *Aeroelasticity*, Addison-Wesley, Cambridge, Mass., p.774, 1955.

Broome, T., "Economical Analysis of Combined Dynamical Systems," Journal of Engineering Mechanics, Vol. 115(10), pp.2122-2135, 1989.

Butkovskiy, A.G.,*Green's Functions and Transfer Functions Handbook*. Ellis Horwood Ltd., Halsted Press, 1982

Butkovskiy, A.G.,*Structural Theory of Distributed Systems*. Ellis Horwood Ltd. 1983

Chen, Y., *Vibrations: Theoretical Methods*. Addison-Wesley. 1966.

Dowell, E.H., "On Some General Properties of Combined Dynamical Systems," Journal of Applied Mechanics, Vol. 46, p.209, 1979.

Fabunmi, J., "Analysis of Modes and Frequencies of Modified Structures Using Computer Algebra," Proceedings of International Conference on Noise & Vibration, August 16-18, 1989, Singapore.

Keener, J.P., *Principles of Applied Mathematics: Transformation and Approximation*. Addison-Wesley, 1988.

MACSYMA Reference Manual, 2 vols. The Mathlab Group, Laboratory for Computer Science, MIT (version 10), 1983.

Nicholson, J. and Bergman, L.A., "Free Vibrationn of Combined Dynamical Systems," Journal of Engineering Mechanics, Vol.112(1), pp.1-13, 1986.

Pavelle, R., Editor, *Applications of Computer Algebra*, Kluwer, 1985.

Rand, R.H., *Computer Algebra in Applied Mathematics: An Introduction to* **MACSYMA**, Pitman, 1984.

Strutt, J.W. and Lord Rayleigh, *The Theory of Sound*, Dover Publications, New York, Vol. 1, p.115, 1945.

Timoshenko, S., Young, D.H., Weaver Jr., W., *Vibration Problems in Engineering*, 4th Edition, John Wiley, 1974.

Wickert, J. and Mote, C.D., "Classical Vibration Analysis of Axially Moving Continua,"

Journal of Applied Mechanics, Vol.57, September, 1990, pp.738-744.

Young, D., "Vibration of a Beam with Concentrated Mass, Spring and Dashport," *Journal of Applied Mechanics*, March, 1948.

APPENDIX II - Manuscript of paper entitled:
"System Parameters of Output Feedback Controlled Flexible Structures."

SYSTEM PARAMETERS OF OUTPUT FEEDBACK CONTROLLED FLEXIBLE STRUCTURES

James A. Fabunmi

AEDAR Corporation

8401 Corporate Drive, Suite 460

Landover, Maryland 20785

ABSTRACT

The combined system consisting of the baseline flexible structure modified by the system of active controllers is considered as a unified dynamical system. Techniques based on computer algebra are used to derive expressions for the transfer functions of the modified system, using the known transfer functions of the baseline flexible structure and the feedback gains of the active controller. The roots of the characteristic polynomial of this transfer function give the system resonant frequencies and damping parameters. Using the computer algebraic system MACSYMA, expressions for these parameters which are explicitly dependent on the output feedback gains of the active controller, are presented. These results permit the parametric study of the placement of the resonant frequencies and damping parameters of the combined system, as functions of the feedback gains. Numerical examples are used to illustrate the application of these results to the calculation of active controller feedback gains based on the requirement that certain modes have specified modal damping while the closed-loop frequencies remain unchanged. **[Key words: Active Control; Smart Structures; Computer Algebra; Dynamics of Flexible Structures]**

NOMENCLATURE

a_i, a_j	=	measurement coordinates for i^{th} and j^{th} controllers
b_i, b_j	=	force application coordinates for i^{th} and j^{th} controllers
$C_j^{(i)}$	=	symbolic coefficient of jth power of p in the i-term derivation
$G(x,\xi,t,\tau)$	=	Green's function
g_i, g_j	=	displacement feedback gains of ith and j^{th} controllers
h_i, h_j	=	velocity feedback gains of ith and j^{th} controllers
$\mathbf{I}$	=	identity matrix
L	=	number of discrete attachments (controllers)
$\mathcal{L}_{x,t}\{\}$	=	partial differential operator
p	=	Laplace variable
p_{0k}	=	kth parameter of baseline system
$Q(x,t), Q(x,p)$	=	system response and its Laplace transform
t	=	time
$W(x,\xi,p)$	=	system transfer function
$W_{ci}(p)$	=	transfer function of ith controller
$w(x,t), w(x,p)$	=	forcing function and its Laplace transform
x, x_1, x_2	=	spatial coordinates
α_i	=	coefficient of the ith power of p in characteristic polynomial
β, β_k	=	modal weights

$\delta(\,)$	=	Dirac delta function
$\{\gamma\}, \gamma_j$	=	vector, with elements defined in Equation(15)
η	=	spatial coordinate
φ_{0k}	=	k^{th} orthonormal modal function for baseline system
$\sigma, \sigma_{0n1}, \sigma_{1n1}$	=	exponential growth rate
τ	=	time
$\omega, \omega_{0n1}, \omega_{1n1}$	=	frequency
$\{\omega\}, \omega_i$	=	vector, with elements defined in Equation(13)
ξ	=	spatial coordinate
$[\,\Omega], \Omega_{i,j}$	=	matrix, with elements defined in Equation(12)

INTRODUCTION

The technology of active control of structures has been the subject of considerable research interest over the past decade in part because of the need to suppress excessive vibrations associated with the deployment of large flexible structures in space (Various Authors, 1986; Atluri and Amos (Ed.), 1988). Because space-borne structures cannot afford the weight penalties of classical vibration control devices such as absorbers or isolators, a lot of effort has been devoted to various means of actively controlling the dynamic characteristics of these structures. These techniques use an external source of energy to apply controlling forces (and/or moments) on the structure which are determined in some relationship to the measured or estimated response of the structure. More advanced implementations of active structural control involve the

embedding of sensors, actuators and processors in the structure itself. Such "smart structures" are able to adjust the characteristics of their controllers e.g. feedback gains, in response to changing dynamical environments. The objective of this paper is to present the results of recent research aimed at the development of simple algorithms for calculating actuator feedback gains, based on specified modal characteristics of the closed-loop system.

The most popular approach to the design of the active control schemes follows the paths of modern control theory which involves optimal state-space feedback control (Various Authors, 1984, 1986; Atluri and Amos (Ed.), 1988; O'Donoghue and Atluri, 1985; Horner and Walz, 1985), or output feedback control (Meirovitch, 1988; Garcia and Inman, 1990). A finite order mathematical model of the structure is required. The state variables are the [generalized] displacements and [generalized] velocities of the structure. In the case of state-space feedback, the state of the system is estimated from measurements at selected coordinates and this estimate is used to derive the feedback gains, using a method based on Pointryagin's principle for solving a constrained optimization problem. This method involves the computation of a positive-definite matrix satisfying the algebraic matrix-Riccatti equation (Junkins and Rew, 1988). Output feedback control does not use the entire state-space estimate for feedback; instead only the measured responses are used. The advantage is that the practical implementation of the controller is simpler and errors associated with the estimation of unmeasured responses are eliminated (Garcia and Inman, 1990). For designs based on these methods, the control strategy is specified in terms of the minimization of an objective function. For a given objective function and a set of initial conditions, the controller feedback gains are calculated once and for all. A question

that is often asked is whether or not optimal control necessarily implies intelligent control. For the control to be considered intelligent, the system must have the ability to alter its control strategies, and readjust the feedback gains, based on some reasoning. An example of such reasoning is to have a controlled structure which, upon sensing (using its embedded sensors) that the spectral distribution of its current external excitation is close to one or more of its resonant modes (the parameters o' which has been stored in the memory of its embedded processor), can alter the strategy of its active controller such that the necessary feedback gains are computed (using its embedded processor) which will maximize the modal damping of the most highly excited modes. This type of approach requires that algorithms be available for directly calculating the controller feedback gains, based on specifications of required closed-loop modal parameters. The development of such algorithms has been one of the motivations of this research effort.

Recent advances in computer algebra have made available symbolic manipulation facilities which extend the tools of algebra and integro-differential calculus beyond the traditional limits (Rand, 1984; Pavelle, 1985). Techniques based on computer algebra were reported by Fabunmi (1989), which permit the derivation of the transfer functions (Laplace transform of the Green's Functions) of the system resulting from the attachment of discrete dynamic substructures to a distributed parameter base-line structure. It is assumed that the algebraic forms of the transfer function of the base-line structure as well as those of the discrete attachments are known. The mathematical form chosen for system transfer functions permits the direct determination of the system parameters as the complex values of the Laplace variable at which singularities of the transfer function occur. For the class of controllers where the

measured output are the feedback variables such as displacements and velocities, the resulting system is mathematically equivalent to that of the attachment of discrete "substructures", the transfer functions of which are given by expressions involving the gain constants and the Laplace variable.

This paper has been organized as follows. In the first section, the equations which were used to derive the effects of active controllers on the system parameters are derived. This section includes some pertinent material from (Fabunmi, 1989), for completeness. The second section presents the expressions for the characteristic polynomials of the closed-loop system, obtained using MACSYMA on the Symbolics 3620 workstation. This is followed by examples of how these results can be used to calculate the controller feedback gains based on specified parameters of the closed-loop system. The basic conclusions of this paper which are presented in the last section are that (1) new tools based on computer algebra have been developed, for the analysis of system characteristics of actively controlled structures, (2) alternative techniques for the design of active controllers have been presented, which make it possible to design an adaptive controller for which different schedules of feedback gains can be used to adjust the system parameters as needed, in order to minimize dynamic response to external excitations.

ANALYSIS OF ACTIVE CONTROLLER EFFECTS

The objective of this section is to present the formulation of the equations that were used to derive the transfer function of the system resulting from the attachment of a finite number of discrete linear output feedback controllers to a distributed parameter,

baseline system such as a flexible structure. These derivations follow the same lines as those presented in (Fabunmi, 1989). The dynamic response of a distributed parameter system are solutions to partial integro-differential equations which can be represented operationally as:

$$L_{x,t}\{Q(x_2,t)\} = w(x_1,t) \tag{1}$$

where $L_{x,t}\{\ \}$ is an integro-differential operator which maps the responses $Q(x_2,t)$ on to the excitations $w(x_1,t)$ subject to appropriate boundary and initial conditions on $Q(x_2,t)$; x_1 is in the spatial domain of the excitations, x_2 is in the spatial domain of the responses and t is time. For linear operators, the Green's function $G(x,\xi,t,\tau)$ is defined such that:

$$L_{x,t}\{G(x_2,\xi,t,\tau)\} = \delta(x_1-\xi)\delta(t-\tau) \tag{2}$$

where $\delta(\ )$ is the Dirac-delta function. The response of the system can be conveniently written in terms of the Green's function as:

$$Q(x_2,t) = \iint G(x_2,\xi,t,\tau)w(\xi,\tau)d\xi d\tau \tag{3}$$

since,

$$\begin{aligned} L_{x,t}\{Q(x_2,t)\} &= \iint L_{x,t}\{G(x_2,\xi,t,\tau)\}w(\xi,\tau)d\xi d\tau \\ &= \iint \delta(x_1-\xi)\delta(t-\tau)w(\xi,\tau)d\xi d\tau \\ &= w(x_1,t) \end{aligned} \tag{4}$$

Butkovskyi (1983) has proposed the introduction of a linear distributed block - in analogy to the lumped parameter block in classical control theory - to represent the

input-output relationship between $Q(x_2,t)$ and $w(x_1,t)$. Thus the schematic of Figure 1(a) is equivalent to the relationship expressed in Equation (3) . For dynamical systems whose responses to stationary excitations are stationary, i.e. the Green's function is stationary in time, the analysis can be simplified by considering the Laplace transform of the equations of motion. The role of the Green's function is now played by the Transfer function, and the relationship of the Laplace transform of the response $Q(x_2,p)$ to that of the excitation $w(x_1,p)$ is given by:

$$Q(x_2,p) = \int G(x_2,\xi,p)w(\xi,p)d\xi \tag{5}$$

where $p = \sigma + i\omega$ is the Laplace variable; σ is the exponential growth rate, and ω is the frequency. This relationship is also depicted schematically in Figure 1(b).

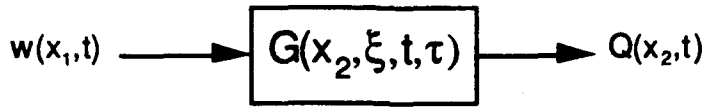

(a) Green's Function Representation

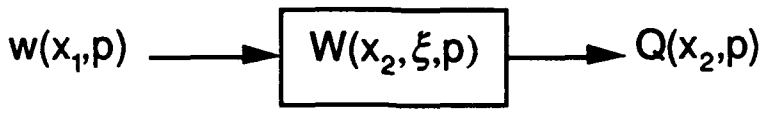

(b) Transfer Function Representation

Figure 1. Linear Distributed Block.

Modelling of Active Controller Attachments

The implementation of the active controller design involves the application of excitation forces at some spatial coordinate $x = b_i$, which are proportional to displacements and velocities measured at $x = a_i$. For example, the ith controller excitation force could be written as:

$$w_c(b_i,t) = g_i Q(a_i,t) + h_i \dot{Q}(a_i,t) \tag{6}$$

where g_i and h_i are the displacement and velocity feedback gains of the ith controller respectively, i = 1,2,...L, L being the total number of controllers. The Laplace transform of Equation (6) results in a relationship which is used to define the transfer function of the ith controller as:

$$\begin{aligned} W_{ci}(p) &= \frac{w_c(b_i,p)}{Q(a_i,p)} \\ &= g_i + h_i p \end{aligned} \tag{7}$$

The schematic which represents the combined interconnected system of the baseline structure and the L active controllers is shown in Figure2. The transfer function of the combined system shown in Figure 2 is given by the following integral equation (Butkovskyi, 1983):

$$W(x,\xi,p) = \int W_T(x,\eta,p) W(\eta,\xi,p) d\eta + W_0(x,\xi,p) \tag{8}$$

where,

$$\begin{aligned} W_T(x,\xi,p) &= \int W_0(x,\eta,p) \sum_{i=1}^{L} \delta(\eta - b_i) W_{ci}(p) \delta(\xi - a_i) d\eta \\ &= \sum_{i=1}^{L} W_0(x,b_i,p) W_{ci}(p) \delta(\xi - a_i) \end{aligned} \tag{9}$$

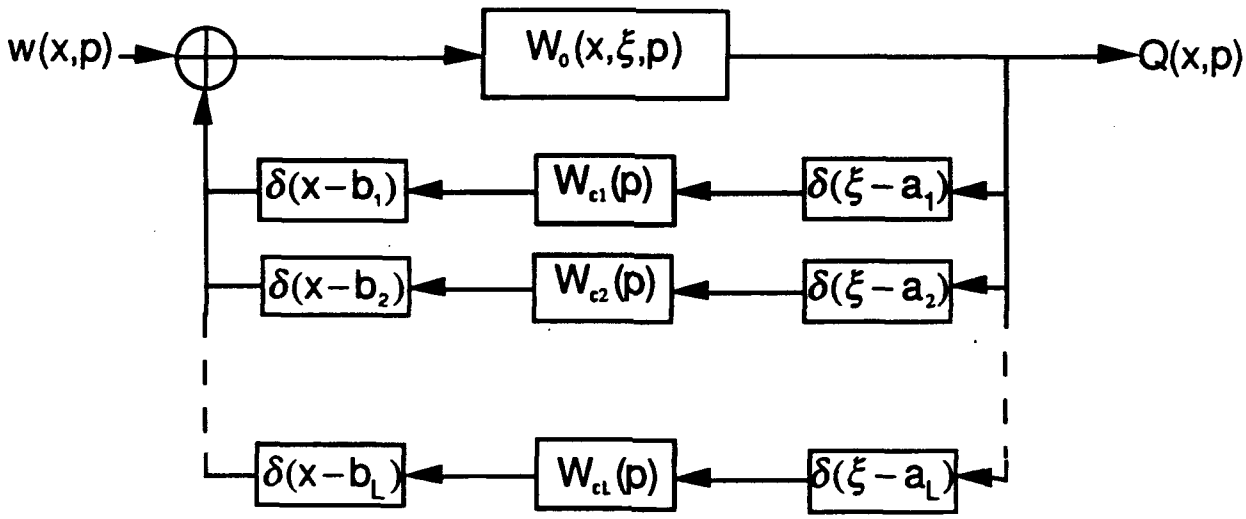

Figure 2. Schematic of Interconnection of Linear Feedback Controllers to Distributed Parameter Baseline Structure.

Substituting Equation(9) into Equation (8) and performing the integration, the result is,

$$W(x,\xi,p) = \sum_{i=1}^{L} W_0(x,b_i,p)W_{ci}(p)W(a_i,\xi,p) + W_0(x,\xi,p) \tag{10}$$

In order to solve for the quantities $W(a_i,\xi,p)$, $i = 1,2,....L$, both sides of Equation (10) are successively multiplied by $\delta(x - a_m)$ and integrations are performed over the x domain for $m = 1,2,....L$ to get:

$$W(a_m,\xi,p) = \sum_{i=1}^{L} W_0(a_m,b_i,p)W_{ci}(p)W(a_i,\xi,p) + W_0(a_m,\xi,p) \tag{11}$$

Equation(11) is a system of L linear equations defining L unknown quantities. If an (LxL) matrix $[\Omega]$ is defined such that its elements are,

$$\Omega_{i,j} = W_0(a_j, b_i, p) W_{ci}(p) \tag{12}$$

and if an (Lx1) vector $\{\omega\}$ is defined such that its elements are,

$$\omega_i = W(a_i, \xi, p) \tag{13}$$

then the system of Equation (11) for m = 1,2,....L can be written in a compact form as:

$$\{\omega\} = [\Omega]\{\omega\} + \{\gamma\} \tag{14}$$

where $\{\gamma\}$ is an (Lx1) vector whose elements are,

$$\gamma_j = W_0(a_j, \xi, p) \tag{15}$$

From (14),

$$\{\omega\} = [\mathbf{I} - \Omega]^{-1}\{\gamma\} \tag{16}$$

where $\mathbf{I}$ is the (LxL) identity matrix.

Application of Computer Algebra

The general algebraic form of the transfer function of the baseline distributed system is taken to be (Chen, 1966; Stakgold, 1979; Butkovskyi, 1982, 1983; Keener, 1988; Fabunmi, 1989):

$$W_0(x, \xi, p) = \sum_{k=1}^{\infty} \left(\frac{1}{\beta_k^2} \frac{\varphi_{0k}(x)\varphi_{0k}(\xi)}{p^2 - p_{0k}^2} \right) \tag{17}$$

where $\varphi_{0k}(x)$ is the kth orthonormal modal function for the baseline structure, p_{0k} is the

corresponding modal parameter and β_k^2 is the weighting factor or generalized mass. Although the summation in Equation (17) includes an infinite number of terms, the practical implementation of that expression requires that only a finite number of terms be retained. The ability to retain a given number of modes in the algebraic derivation depends on the power and memory of the computer as well as the number of discrete modifications to the baseline structure. The substitution of Equation (17) into Equation (16) and the subsequent evaluation and simplification of the transfer function of the combined system as shown in Equation (10) is performed using the following set of MACSYMA routines:

```
W0(EXX,XXSI,PEE):=BLOCK(
        PURPOSE:"EXPRESSION FOR TRANSFER FUNCTION FOR BASELINE
        STRUCTURE - I.E. THE FUNCTION W0(X,XSI,P)"
        RAT(SUM('PHI(EXX,K)*'PHI(XXSI,K)/(PEE^2-('P0[K]^2),K,N1,N2))/'BSQ)$

GAMMA_VECTOR(XXXSI,ARGP):=BLOCK(
        GAMMA:ZEROMATRIX(NS,1),
        FOR J THRU NS
        DO SETELMX(W0('A[J],XXSI,ARGP),J,1,GAMMA))$

OMEGA_MATRIX(ARGP):=BLOCK(
        CAP_OMEGA:ZEROMATRIX(NS,NS),
        FOR I THRU NS
        DO (
        FOR J THRU NS
        DO (W0IJ:W0('A[J],'B[I],ARGP),
        SETELMX(W0IJ*WCP[I],I,J,CAP_OMEGA))))$
```

```
W(EXX,XXSI,PEE,N11,N22,N33):=BLOCK(
    SCALARMATRIXP:FALSE,N1:N11,N2:N22,NS:N33,
    FOR KK FROM N1 THRU N2
    DO STARTP(KK),
    FOR N THRU NS
    DO WCP[N]:RAT(SUBST(PEE,P,WC[N])),
    OMEGA_ MATRIX(PEE), GAMMA_VECTOR(XXSI,PEE),
    MATRIX:IDENT(NS)-CAP_OMEGA,OMEGA:ZEROMATRIX(NS,1),
    INVERSE_MATRIX:RAT(ADJOINT(MATRIX))/RAT(DETERMINANT(MATRIX)),
    POLY:DENOM(INVERSE_MATRIX[1,1]),
    OMEGA:RAT(INVERSE_MATRIX . GAMMA),
    W1:RAT(SUM(W0(EXX,B[I],PEE)*WCP[I]*OMEGA[I,1],I,1,NS)+
    W0(EXX,XXSI,PEE)), "DONE")$
```

W1 gives the expression for the transfer function of the combined system; POLY is the characteristic polynomial of the combined system. In order to cast the resultant transfer function into the form of Equation(17) for the combined system, the system parameters p_{1k} are determined as the roots of the characteristic polynomial of the system. In the above routines, it is possible to consider any range of terms [N11,N22] in the baseline transfer function series, as well as any number [N33] of discrete attachments to the baseline system. The computer-algebraic results that will be presented in the next section have been generalized to the case of an arbitrary number of discrete attachments. This is done by mathematical induction, based on the results provided by MACSYMA for different number of attachments specified in the function calls.

COMPUTER-ALGEBRAIC RESULTS

Some results of the derivation of the characteristic polynomials for an arbitrary number of attachments using one- and two terms in the base-line transfer function series, are presented in this section. These derivations were performed on the Symbolics 3620. A uniform one-dimensional baseline structure was assumed in this study, so that $\beta_k^2=\beta^2$ for all the k's.

One-term derivation:

$$\text{POLYNOMIAL}(1) = C_2^{(1)} p^2 + C_0^{(1)}(p) \tag{18}$$

where,

$$C_0^{(1)}(p) = -\beta^2 p_{0n_1}^2 - \sum_{i=1}^{L} \{W_{ci}(p)\varphi_{0n_1}(a_i)\varphi_{0n_1}(b_i)\} \tag{19}$$

and,

$$C_2^{(1)} = \beta^2 \tag{20}$$

Note that the polynomial in Equation (18) is not yet fully explicit in p until the expressions for $W_{ci}(p)$ are substituted into Equation (19). If these functions are as shown in Equation(7) then,

$$C_0^{(1)}(p) = -\beta^2 p_{0n_1}^2 - \sum_{i=1}^{L} \{(g_i + h_i p)\varphi_{0n_1}(a_i)\varphi_{0n_1}(b_i)\} \tag{21}$$

So that for this class of active controller design, and using the one-term approximation to the baseline transfer function, the characteristic polynomial in p whose roots are the

system parameters is given by:

$$\text{POLYNOMIAL}(1) = \left\{\beta^2\right\} p^2 - \left\{\sum_{i=1}^{L}\{h_i\, \varphi_{0n_1}(a_i)\varphi_{0n_1}(b_i)\}\right\} p$$
$$- \left\{\beta^2 p_{0n_1}^2 + \sum_{i=1}^{L}\{g_i\, \varphi_{0n_1}(a_i)\varphi_{0n_1}(b_i)\}\right\} \tag{22}$$

Two-term derivation:

$$\text{POLYNOMIAL}(2) = C_4^{(2)} p^4 + C_2^{(2)}(p)\, p^2 + C_0^{(2)}(p) \tag{23}$$

where,

$$C_4^{(2)} = \left(\beta^2\right)^2 \tag{24}$$

$$C_2^{(2)}(p) = -\left(\beta^2\right)^2 \sum_{j=1}^{2}\left\{p_{0n_j}^2\right\} - \sum_{i=1}^{L}\left\{W_{ci}(p)\sum_{j=1}^{2}\left[\beta^2 \varphi_{0n_j}(a_i)\varphi_{0n_j}(b_i)\right]\right\}$$
$$= -\left(\beta^2\right)^2 \sum_{j=1}^{2}\left\{p_{0n_j}^2\right\} - \sum_{i=1}^{L}\left\{W_{ci}(p)\left\lfloor \beta\varphi_{0n_1}(a_i) \quad \beta\varphi_{0n_2}(a_i)\right\rfloor \begin{Bmatrix}\beta\varphi_{0n_1}(b_i)\\ \beta\varphi_{0n_2}(b_i)\end{Bmatrix}\right\} \tag{25}$$

and,

$$
\begin{aligned}
C_0^{(2)}(p) = & \left(\beta^2 p_{0n_1}^2\right)\cdot\left(\beta^2 p_{0n_2}^2\right) \\
& + \sum_{i=1}^{L}\left\{ W_{ci}(p) \lfloor \beta\varphi_{0n_1}(a_i) \quad \beta\varphi_{0n_2}(a_i) \rfloor \begin{bmatrix} p_{0n_2}^2 & 0 \\ 0 & p_{0n_1}^2 \end{bmatrix} \begin{Bmatrix} \beta\varphi_{0n_1}(b_i) \\ \beta\varphi_{0n_2}(b_i) \end{Bmatrix} \right\} \\
& + \sum_{i=1}^{L}\sum_{j>i}^{L}\left\{ \begin{array}{c} W_{ci}(p)W_{cj}(p)\left(\lfloor \varphi_{0n_1}(a_i) \quad -\varphi_{0n_2}(a_i) \rfloor \begin{Bmatrix} \varphi_{0n_2}(a_j) \\ \varphi_{0n_1}(a_j) \end{Bmatrix} \right) \\ \times \left(\lfloor \varphi_{0n_1}(b_i) \quad -\varphi_{0n_2}(b_i) \rfloor \begin{Bmatrix} \varphi_{0n_2}(b_j) \\ \varphi_{0n_1}(b_j) \end{Bmatrix} \right) \end{array} \right\}
\end{aligned}
\tag{26}
$$

As mentioned earlier, the explicit dependence of the polynomial on the Laplace variable p will be determined when the appropriate expressions are substituted for the functions $W_{ci}(p)$. If the controller transfer functions given in Equation(7) are substituted into Equation (25) and (26), then following a collection of the coefficients of the powers of p in the polynomial of Equation (23), the result is:

$$\text{POLYNOMIAL}(2) = \alpha_4 p^4 + \alpha_3\ p^3 + \alpha_2\ p^2 + \alpha_1\ p + \alpha_0 \tag{27}$$

where,

$$\alpha_4 = \left(\beta^2\right)^2 \tag{28}$$

$$\alpha_3 = -\sum_{i=1}^{L}\left\{ h_i \lfloor \beta\varphi_{0n_1}(a_i) \quad \beta\varphi_{0n_2}(a_i) \rfloor \begin{Bmatrix} \beta\varphi_{0n_1}(b_i) \\ \beta\varphi_{0n_2}(b_i) \end{Bmatrix} \right\} \tag{29}$$

$$\alpha_2 = -(\beta^2)^2 \sum_{j=1}^{2} \left\{ p_{0n_j}^2 \right\} - \sum_{i=1}^{L} \left\{ g_i \lfloor \beta\varphi_{0n_1}(a_i) \quad \beta\varphi_{0n_2}(a_i) \rfloor \begin{Bmatrix} \beta\varphi_{0n_1}(b_i) \\ \beta\varphi_{0n_2}(b_i) \end{Bmatrix} \right\}$$
$$+ \sum_{i=1}^{L} \sum_{j>i}^{L} \left\{ \begin{array}{l} h_i h_j \left(\lfloor \varphi_{0n_1}(a_i) \quad -\varphi_{0n_2}(a_i) \rfloor \begin{Bmatrix} \varphi_{0n_2}(a_j) \\ \varphi_{0n_1}(a_j) \end{Bmatrix} \right) \\ \qquad \times \left(\lfloor \varphi_{0n_1}(b_i) \quad -\varphi_{0n_2}(b_i) \rfloor \begin{Bmatrix} \varphi_{0n_2}(b_j) \\ \varphi_{0n_1}(b_j) \end{Bmatrix} \right) \end{array} \right\} \tag{30}$$

$$\alpha_1 = \sum_{i=1}^{L} \left\{ h_i \lfloor \beta\varphi_{0n_1}(a_i) \quad \beta\varphi_{0n_2}(a_i) \rfloor \begin{bmatrix} p_{0n_2}^2 & 0 \\ 0 & p_{0n_1}^2 \end{bmatrix} \begin{Bmatrix} \beta\varphi_{0n_1}(b_i) \\ \beta\varphi_{0n_2}(b_i) \end{Bmatrix} \right\}$$
$$+ \sum_{i=1}^{L} \sum_{j>i}^{L} \left\{ \begin{array}{l} (g_i h_j + g_j h_i) \times \left(\lfloor \varphi_{0n_1}(a_i) \quad -\varphi_{0n_2}(a_i) \rfloor \begin{Bmatrix} \varphi_{0n_2}(a_j) \\ \varphi_{0n_1}(a_j) \end{Bmatrix} \right) \\ \qquad \times \left(\lfloor \varphi_{0n_1}(b_i) \quad -\varphi_{0n_2}(b_i) \rfloor \begin{Bmatrix} \varphi_{0n_2}(b_j) \\ \varphi_{0n_1}(b_j) \end{Bmatrix} \right) \end{array} \right\} \tag{31}$$

and,

$$\alpha_0 = \left(\beta^2 p_{0n_1}^2\right) \cdot \left(\beta^2 p_{0n_2}^2\right)$$
$$+ \sum_{i=1}^{L} \left\{ g_i \lfloor \beta\varphi_{0n_1}(a_i) \quad \beta\varphi_{0n_2}(a_i) \rfloor \begin{bmatrix} p_{0n_2}^2 & 0 \\ 0 & p_{0n_1}^2 \end{bmatrix} \begin{Bmatrix} \beta\varphi_{0n_1}(b_i) \\ \beta\varphi_{0n_2}(b_i) \end{Bmatrix} \right\}$$
$$+ \sum_{i=1}^{L} \sum_{j>i}^{L} \left\{ \begin{array}{l} (g_i g_j) \times \left(\lfloor \varphi_{0n_1}(a_i) \quad -\varphi_{0n_2}(a_i) \rfloor \begin{Bmatrix} \varphi_{0n_2}(a_j) \\ \varphi_{0n_1}(a_j) \end{Bmatrix} \right) \\ \qquad \times \left(\lfloor \varphi_{0n_1}(b_i) \quad -\varphi_{0n_2}(b_i) \rfloor \begin{Bmatrix} \varphi_{0n_2}(b_j) \\ \varphi_{0n_1}(b_j) \end{Bmatrix} \right) \end{array} \right\} \tag{32}$$

For the class of active controllers considered in this study, i.e those with displacement and velocity feedback, the preceding expressions permit the explicit understanding of how the feedback gains affect the resulting system parameters. As a matter of fact, since polynomials up to the fourth order can be solved in closed form by computer

algebra, it follows that closed form expressions can be obtained for the combined system parameters in terms of the feedback gains, as well as the location of the measurement and actuation points. In the following section, the results for the one-term derivation will be used to illustrate a possible method for determining the controller feedback gains when it is desired to achieve specified closed-loop system parameters. As will be seen, this method involves relatively simple calculations which can easily be programmed into embedded processors of "smart" structures.

CALCULATION OF CONTROLLER FEEDBACK GAINS

Consider a baseline structure with negligible damping, i.e. $p_{0n1} = i\omega_{0n1}$. By virtue of the weak coupling of the modes of an undamped structure, the one-term derivation is adequate for estimating the closed-loop system parameters. Equating the polynomial of Eq.22 to zero and solving for the real and imaginary parts of p_{1n1}, , the frequencies and exponential growth rates of the closed-loop modes are;

$$\omega_{1n_1} = \sqrt{\omega_{0n_1}^2 - \left\{\frac{1}{2\beta^2}\sum_{i=1}^{L}\{h_i\,\varphi_{0n_1}(a_i)\,\varphi_{0n_1}(b_i)\}\right\}^2 - \frac{1}{\beta^2}\sum_{i=1}^{L}\{g_i\,\varphi_{0n_1}(a_i)\,\varphi_{0n_1}(b_i)\}} \tag{33}$$

$$\sigma_{1n_1} = \frac{1}{2\beta^2}\sum_{i=1}^{L}\{h_i\,\varphi_{0n_1}(a_i)\,\varphi_{0n_1}(b_i)\} \tag{34}$$

The damping of the closed-loop system is controlled by the velocity feed-back gains, whereas the frequency is affected by both the velocity and displacement feedback gains. If L velocity feedback gains are to be calculated directly based on specified values of the growth rates of L system modes, Equation (34) provides a set of L

equations for the L desired values of h_i. It may also be desired that there be no shift in the frequencies of these or some other L modes. In that case, a set of L equations for the L values of the displacement feedback gains, g_i, can be set up as follows:

$$-\left\{\frac{1}{2\beta^2}\sum_{i=1}^{L}\{h_i\,\varphi_{0n_1}(a_i)\,\varphi_{0n_1}(b_i)\}\right\}^2-\frac{1}{\beta^2}\sum_{i=1}^{L}\{g_i\,\varphi_{0n_1}(a_i)\,\varphi_{0n_1}(b_i)\}=0 \tag{35}$$

Having obtained the values of the velocity and displacement feedback gains in this manner, it is necessary to check the exponential growth rates of the modes that were not included in the analysis, using Equation (34). The purpose of this check is to verify that there are no modes for which the exponential growth rate is positive - an indication that instability of that mode can be induced by the controller.

EXAMPLE

As an illustration of this approach, consider the cantilevered uniform beam shown in Figure 3. The beam is 100 meters long, with the following cross sectional properties: flexural rigidity, EI = 1.0e8 N-m^2 ; mass per unit length, ρA = 1 kg/m. The natural frequencies and the orthonormal modes of the first ten modes of this beam are shown in Table 1. The active control system consists of two sensors and two actuators. The sensors are located at spanwise coordinates 30 and 100 m. The actuators are located at spanwise coordinates 40 and 100m. Consistent with the notation in this paper, the active control system is made up of four (4) controllers: controller #1 generates a force signal at x=40 based on the sensor signal at x=30; controller #2 generates a force signal at x=100 based on the sensor signal at x=30; controller #3 generates a force signal at x=40 based on the sensor signal at x=100; and controller #4 generates a force signal at x=100 based on the sensor signal at x=100.

Because of the linearity of both the structural model and the controller design, there need only be one physical actuator at x=40 and another one at x=100. The force signals for actuators 1 and 3 are summed and applied to the physical actuator at x=40; similarly, the force signals for actuators 2 and 4 are summed up and applied to the physical actuator at x=100. Also, only one physical sensor at x=30 is needed for controllers 1 and 2, and one physical sensor at x=100 is needed for controllers 3 and 4. The table in Figure 3 specifies the sensor and actuator positions for the four controllers in this example. The objective of this example is to show how to calculate the velocity and displacement feed-back gains h_i, g_i, i=1,2,3,4 such that: (1) the modal damping of four selected modes are as specified in advance; (2) the natural frequencies of four selected modes (not necessarily the same ones as in (1)) are unchanged; and (3) none of the first ten modes is destabilized by the active control system. The restriction to the specification of the parameters of only four modes is due to the fact that there are only four independent controllers under consideration. The feedback gains calculated in this manner are not optimal in the usual sense of minimizing some objective function which is related to both the response and the control power. The merit of this approach lies in the ability to concentrate available control power on the damping of certain modes which are considered most responsive to a given external excitation, without destablizing the other modes. Thus if the nature of external excitation were to change, and hence require that some other modes be critically damped, this method affords a means of adjusting the feed-back gains appropriately.

For each of the four modes for which a desired damping ratio is specified in advance, Equation 34 gives four linear equations for the four unknown coefficients h_i, i=1,2,3,4;

which are the velocity feed-back gains. After the velocity feed-back gains have been determined, Equation 35 is then used to obtain the additional relations needed to determine the displacement feed-back gains g_i, i=1,2,3,4; based on the conservation of the natural frequencies of the desired modes. For this example, it is required that the first mode be critically damped, and that the next three modes be moderately damped. It is also required that there be no shift in the frequencies of the first four modes of the beam. Table 2(a) shows the specified damping ratios for the first four modes of the cantilevered beam. For the first mode to be critically damped, the damping ratio is specified to be unity. The results of the calculations of the velocity and displacement feed-back gains are given in Table 2(b) for this example. Having obtained the values of the four pairs of displacement and velocity feedback gains for the four controllers, it is now possible to use Equations 33 and 34 to recalculate the closed loop frequencies and exponential growth rates of all the other modes. The results of this calculation for the first ten modes of the example uniform cantilever beam, are presented in Table 2(c). This example shows that the feedback gains calculated will yield the desired damping ratios and frequency shifts without destabilizing any of the first ten modes of the example beam. So far, there is no guarantee that all the higher order modes will be stable. If upon checking further, some higher order mode is found with a negative damping ratio, it is prudent to perform the calculation again, including the unstable mode among the modes for which the damping ratio is specified. Further research is needed to develop a more systematic approach for ensuring the stability of the modes for which specific damping values were not specified in advance.

CONCLUSION

This paper has presented results of computer-algebraic derivations of the characteristic parameters of systems consisting of a distributed baseline structure and output feedback linear active controllers. Expressions which show the explicit dependence of the system parameters on the displacement and velocity feed-back gains as well as the measurement and actuator coordinates were obtained for the cases when the transfer function of the baseline system has been approximated by retaining one- and two- terms in the infinite series which determine these transfer functions. An immediate application of these results is the calculation of displacement and velocity feed-back gains based on requirements that certain closed loop modes have specified damping ratios. Because of the simplicity of the calculations involved in this process, it becomes practical to conceive embedded systems which permit the "smart" structure to readjust its feedback gains in order to increase the damping of those of its modes which are most strongly excited by the external dynamical forces. The example of a cantilevered uniform beam was used to illustrate how to implement this methodology for a finite number of controllers. Further research is indicated to develop a systematic way of assuring that the active control system does not cause a destablilzation of those modes for which the damping ratios were not specified in advance.

ACKNOWLEDGEMENTS

This research was sponsored by the United States Air Force Office of Scientific Research, Air Force Systems Command, under Contract F49620-89-C-0112 and by a Subcontract No. OSP-90-10-434-004 from Clark Atlanta University under AFOSR Contract F49620-89-C-0075. The United States Government is authorized to reproduce and distribute reprints for governmental purposes not withstanding any copyright notation herein. The author wishes to thank Dr. Spencer Wu for his continued support of the effort, and Dr. Tony Amos for initiating the program.

REFERENCES

Atluri, S.N., Amos, A.K., (Ed.), 1988, "Large Space Structures: Dynamics and Control". Springer-Verlag.

Butkovskyi, A.G., 1982, "Green's Functions and Transfer Functions Handbook". Ellis Horwood Ltd., Halsted Press.

Butkovskyi, A.G., , 1983, "Structural Theory of Distributed Systems". Ellis Horwood Ltd.

Chen, Y., 1966, "Vibrations: Theoretical Methods", Addison-Wesley.

Fabunmi, J.A., 1989, "Analysis of Modes and Frequencies of Modified Structures Using Computer Algebra", Proceedings International Conference on Noise and Vibration '89, Aug. 16-18,Singapore.

Garcia, E., Inman, D.J., 1990, "Control Formulations for Vibration Suppression of an Active Structure in Slewing Motions", ASME Publication DSC-Vol. 20 - Advances in Dynamics and Control of Flexible Spacecraft and Space-Based Manipulations - (S.M. Joshi, T.E. Alberts, Y.P. Kakad, Editors), pp. 1-5.

Horner, G.C., Walz, J.E., 1985, "A Design Technique for Determining Actuator Gains in Spacecraft Vibration Control", AIAA/ASME/ASCE/AHS 26th Structures, Structural Dynamics and Materials Conference, Part 2, Orlando Florida, pp. 143-151.

Junkins, J.L., Rew, D. W., 1988, "Unified Optimization of Structures and Controllers", pp. 323-354 of (Atluri and Amos, 1988).

Keener, J.P., 1988, "Principles of Applied Mathematics: Transformation and Approximation". Addison-Wesley.

Lynch, P.J., Banda, S.S., 1988, "Active Control for Vibration and Damping", pp. 239-262 of (Atluri and Amos, 1988).

Meirovitch, L., 1988, "Control of Distributed Structures", pp. 195-212 of (Atluri and Amos, 1988).

O'Donoghue, P.E., Atluri, S.N., 1985, "Control of Dynamic Response of A Continuum Model of A Large Space Structure", AIAA/ASME/ASCE/AHS 26th Structures, Structural Dynamics and Materials Conference, Part 2, Orlando Florida, pp. 31-42.

Pavelle, R., Editor, 1985, Applications of Computer Algebra, Kluwer.

Rand, R.H., 1984, "Computer Algebra in Applied Mathematics: An Introduction to MACSYMA", Pitman.

Stakgold, I., 1979, "Green's Functions and Boundary Value Problems", Wiley Interscience.

Various Authors, 1984, Special Section, "Large Space Structure Control: Early Experiments," AIAA Journal of Guidance, Control, and Dynamics, Vol. 7, September-October 1984.

Various Authors, 1986, NASA/DOD Control/Structures Interaction Technology - Parts 1 and 2 NASA Conference Publication 2447, November 1986.

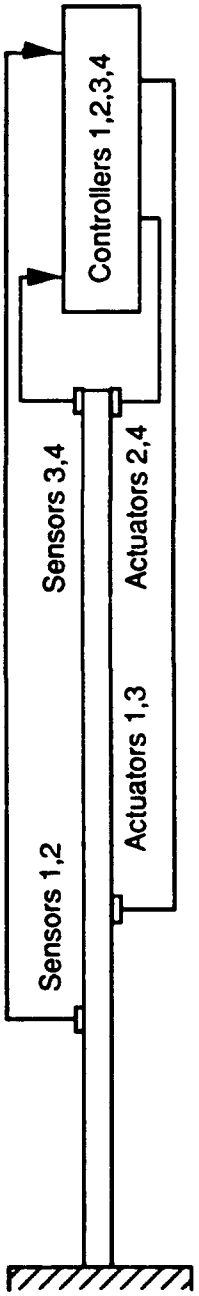

Index of Controller i	Sensor Location a_i	Actuator Location b_i
1	30	40
2	30	100
3	100	40
4	100	100

Figure 3. Example of cantilevered uniform beam with two actuators and two sensors.

Table 1. The First Ten Orthonormal Modes of the example Uniform Cantilevered Euler-Bernoulli Beam
Flexural Rigidity EI=1.0e8 N-m^2; Mass per unit length, ρA=1 kg/m; Length, L = 100 m

n_1	ω_{0n_1}	A	B	C	D	$\varphi_{0n_1}(X)$
1	3.516	0.02417	4.138	0.01875	3.038	$A(B(\cos(Cx)-\cosh(Cx))-D(\sin(Cx)-\sinh(Cx)))$
2	22.034	0.00186	53.645	0.04694	54.636	
3	61.697	7.67e-5	1289.986	0.07854	1288.985	
4	120.902	0.10235	-	0.10996	-	$A(\cos(Cx)-\sin(Cx)-e^{-Cx})$
5	199.860	0.10182	-	0.14137	-	
6	298.556	0.10148	-	0.17279	-	
7	416.991	0.10125	-	0.20420	-	
8	555.165	0.10108	-	0.23562	-	
9	713.079	0.10095	-	0.26704	-	
10	890.732	0.10085	-	0.29845	-	

Table 2 (a). Target Damping Ratios for Selected Modes

Mode No. n	Target Damping Ratio $-\frac{\sigma_n}{\omega_n}$
1	1.00
2	0.10
3	0.03
4	0.01

Table 2 (b). Velocity and Displacement Feed-back Gains

Controller No. i	Velocity Feed-back Gains - N-sec/m h_i	Displacement Feed-back Gains (to conserve frequencies of first 4 modes) - N/m g_i
1	279.87	1071.83
2	-73.50	-554.02
3	82.10	581.60
4	-193.41	-400.77

Table 2 (c). Closed Loop Parameters of First Ten Modes of the Example Beam

Mode No. n	Damping Ratio $-\frac{\sigma_n}{\omega_n}$	Percentage shift in natural frequency $\frac{(\Delta\omega_n)}{\omega_n}\times 100\%$
1	1.00	0.0
2	0.10	0.0
3	0.03	0.0
4	0.01	0.0
5	0.0029	0.0041
6	0.0033	0.0035
7	0.0050	4.39e-4
8	0.0025	0.0013
9	0.0038	0.0015
10	0.0029	1.37e-4

APPENDIX III - Manuscript of paper entitled:
"Sensitivity of Closed-Loop Modal Parameters of Controlled Structures to Sensor/Actuator Placement and Feedback Gains."

SENSITIVITY OF CLOSED-LOOP MODAL PARAMETERS OF CONTROLLED STRUCTURES TO SENSOR/ACTUATOR PLACEMENT AND FEEDBACK GAINS

James A. Fabunmi

AEDAR Corporation
Landover, Maryland

ABSTRACT

Computer algebra (MACSYMA) has been used to derive the characteristic polynomials which determine the closed-loop frequencies and damping coefficients of output-feedback controlled structures. These expressions show explicitly how the locations of the actuator/sensor pairs and the displacement and velocity feedback gains influence the frequencies and damping parameters of the closed-loop system modes. For lightly coupled modes, simple relations are obtained between the modal parameters and the coordinates of the sensor/actuator pairs as well as the displacement and velocity feedback gains. Using the example of a cantilevered uniform beam controlled by a single sensor/actuator pair, numerical results are used to illustrate the sensitivity of the closed-loop modal parameters to the placement of the sensor/actuator pair as well as the feedback gains. Such results help to answer questions about optimal placement of sensor/actuator pairs for the active control of a flexible structure.

NOMENCLATURE

a_i, a_j	=	measurement coordinates for i^{th} and j^{th} controllers
b_i, b_j	=	force application coordinates for i^{th} and j^{th} controllers
$C_j^{(i)}$	=	symbolic coefficient of jth power of p in the i-term derivation
$G(x,\xi,t,\tau)$	=	Green's function
g_i, g_j	=	displacement feedback gains of ith and j^{th} controllers
h_i, h_j	=	velocity feedback gains of ith and j^{th} controllers
$\mathbf{I}$	=	identity matrix
L	=	number of discrete attachments (controllers); beam length
$\mathcal{L}_{x,t}\{\}$	=	partial differential operator
p	=	Laplace variable ($p = \sigma + i\omega$)
p_{0k}	=	k^{th} parameter of baseline system
$Q(x,t), Q(x,p)$	=	system response and its Laplace transform
t	=	time
$W(x,\xi,p)$	=	system transfer function
$W_{ci}(p)$	=	transfer function of ith controller
$w(x,t), w(x,p)$	=	forcing function and its Laplace transform
x, x_1, x_2	=	spatial coordinates
α_i	=	coefficient of the ith power of p in characteristic polynomial
β, β_k	=	modal weights
$\delta(\,)$	=	Dirac delta function
$\{\gamma\}, \gamma_j$	=	vector, with elements defined in Eq.(15)
η	=	spatial coordinate
φ_{0k}	=	k^{th} orthonormal modal function for baseline system
$\sigma, \sigma_{0n1}, \sigma_{1n1}$	=	exponential growth rate
τ	=	time
$\omega, \omega_{0n1}, \omega_{1n1}$	=	frequency
$\{\omega\}, \omega_i$	=	vector, with elements defined in Eq.(13)
ξ	=	spatial coordinate
$[\,\Omega], \Omega_{i,j}$	=	matrix, with elements defined in Eq.(12)

INTRODUCTION

Large flexible structures such as those being deployed for space-based applications usually require some form of active control technology to maintain vibrational response within tolerable levels [1,2]. Because space-borne structures cannot afford the weight penalties of classical vibration control devices such as absorbers or isolators, a lot of effort has been devoted to various means of actively controlling the dynamic characteristics of these structures. Such techniques use an external source of energy to apply controlling forces (and/or moments) on the structure which are determined in some relationship to the measured or estimated response of the structure. From a review of the literature on this subject, the approach of choice for the design of the active control schemes appears to follow the paths of modern control theory which involves optimal state-space feedback control[1-5], or output feedback control[2a,6]. Preliminary to the application of optimal control techniques, a discretization of the equations of motion is accomplished either using the finite element method, the modal decomposition method or outright lumping of the parameters of the structure. The state variables are the [generalized] displacements and [generalized] velocities of the structure. In the case of state-space feedback, the state of the system is estimated from measurements at selected coordinates and this estimate is used to derive the feedback gains using a method based on Pointryagin's principle for solving a constrained optimization problems which involves the computation of a positive-definite matrix satisfying the algebraic matrix-Riccatti equation[2c]. Output feedback control does not use the entire state-space estimate for feedback; instead only the measured responses are used, the advantage being that the practical implementation of the controller is simpler and errors associated with the estimation of unmeasured responses are eliminated[6].

A considerable amount of numerical computation is involved in the implementation of the methods currently used in practice, and it often happens that the designer is not afforded the benefit of simple results which might aid his/her intuition in the design process. Traditionally, regardless of what a computer program gives as a result, the engineer still needs some method of applying simple intuitive considerations for assessing the feasibility of the design. In classical vibration control, and even in classical control theory, such intuitive assessments are provided by studying the placement of the closed-loop system parameters - resonant frequency and damping in the case of vibration control, and the placement of poles and zeroes in the case of classical control theory. Some recent efforts at understanding the closed-loop parameters of actively controlled structures have been reported in [7] and [8].

Techniques based on computer algebrawere developed in [11] and [12], which permit the derivation of the transfer functions (Laplace transform of the Green's Functions) of the system resulting from the attachment of discrete dynamic substructures to a distributed parameter base-line structure. It is assumed that the algebraic forms of the transfer function of the base-line structure as well as those of the discrete attachments

are known. The mathematical form of the system transfer functions permits the direct determination of the system parameters which are the complex values of the Laplace variable at which singularities of the transfer function occur. When the measured output are proposed as the feedback variables in an active controller design, the resulting system is mathematically equivalent to that of the attachment of discrete "substructures" [13], the transfer functions of which are given by expressions involving the gain constants and the Laplace variable. In this research effort, these computer-algebraic tools have been used to derive explicit expressions for the closed-loop system parameters, in terms of the sensor/actuator placement and the displacement and velocity feedback gains. The goal is to develop insights into how the placement of the sensor/actuator pairs influences the sensitivity of the closed-loop system parameters to the feed back gains. Whereas modern control theory provides a means of calculating the feed back gains which optimize a defined objective function, nothing is said about the influence of the placement the sensor/actuator pairs. It is expected that the present approach will help answer questions regarding the optimal placement of sensor/actuator pairs for active control of flexible structures.

The paper has been organized as follows. In the first section, the equations which were used to derive the effects of active controllers on the system parameters are derived. The second section presents the expressions for the characteristic polynomials for the closed-loop system, obtained using MACSYMA on the Symbolics 3620 workstation. For lightly coupled modes, simple approximate relations are obtained between the modal parameters and the coordinates of the sensor/actuator pairs as well as the displacement and velocity feedback gains. Using the example of a cantilevered uniform beam controlled by a single sensor/actuator pair, numerical results are used to illustrate the sensitivity of the closed-loop modal parameters to the placement of the sensor/actuator pair as well as the feedback gains.

SECTION I . ANALYSIS OF ACTIVE CONTROLLER EFFECTS

The objective of this section is to present the formulation of the equations that were used to derive the transfer function of the system resulting from the attachment of a finite number of discrete linear output feedback controllers to a distributed parameter, baseline system such as a flexible structure. These derivations follow the same lines as those presented in [11] and [12], but because these references may not be easily accessible to the reader, the relevant parts of the derivation are repeated here for completeness. The dynamic response of a distributed parameter system are solutions to partial integro-differential equations which can be represented operationally as:

$$L_{x,t}\{Q(x_2,t)\} = w(x_1,t) \tag{1}$$

where $L_{x,t}\{\ \}$ is an integro-differential operator which maps the responses $Q(x_2,t)$ on to the excitations $w(x_1,t)$ subject to appropriate boundary and initial conditions on

$Q(x_2,t)$; x_1 is in the spatial domain of the excitations, x_2 is in the spatial domain of the responses and t is time. For linear operators, the Green's function $G(x,\xi,t,\tau)$ is defined such that:

$$L_{x,t}\{G(x_2,\xi,t,\tau)\} = \delta(x_1-\xi)\delta(t-\tau) \tag{2}$$

where $\delta(\ )$ is the Dirac-delta function. The response of the system can be conveniently written in terms of the Green's function as:

$$Q(x_2,t) = \iint G(x_2,\xi,t,\tau)w(\xi,\tau)d\xi d\tau \tag{3}$$

since,

$$\begin{aligned} L_{x,t}\{Q(x_2,t)\} &= \iint L_{x,t}\{G(x_2,\xi,t,\tau)\}w(\xi,\tau)d\xi d\tau \\ &= \iint \delta(x_1-\xi)\delta(t-\tau)w(\xi,\tau)d\xi d\tau \\ &= w(x_1,t) \end{aligned} \tag{4}$$

Butkovskyi [14] has proposed the introduction of a linear distributed block - in analogy to the lumped parameter block in classical control theory - to represent the input-output relationship between $Q(x_2,t)$ and $w(x_1,t)$. Thus the schematic of Fig.1(a) is equivalent to the relationship expressed in Eq.(3) . For dynamical systems whose responses to stationary excitations are stationary, i.e. the Green's function is stationary in time, the analysis can be simplified by considering the Laplace transform of the equations of motion. The role of the Green's function is played by the Transfer function, and the relationship of the Laplace transform of the response $Q(x_2,p)$ to that of the excitation $w(x_1,p)$ is given by:

$$Q(x_2,p) = \int G(x_2,\xi,p)w(\xi,p)d\xi \tag{5}$$

where $p = \sigma + i\omega$ is the Laplace variable; σ is the exponential growth rate, and ω is the frequency. This relationship is also depicted schematically in Fig. 1(b).

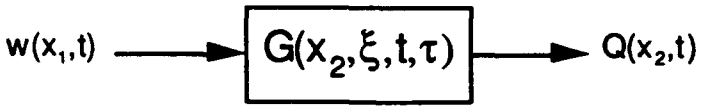

(a) Green's Function Representation

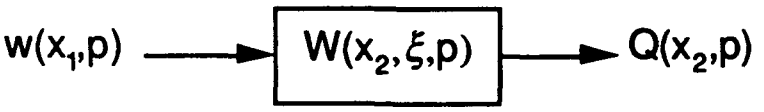

(b) Transfer Function Representation

Figure 1. Linear Distributed Block.

Modelling of Active Controller Attachments

The implementation of the active controller design with displacement and velocity feedback involves the application of excitation forces at some spatial coordinate $x_1 = b_i$, which are proportional to displacements and velocities measured at $x_2 = a_i$. For example, the ith controller excitation force could be written as:

$$w_c(b_i,t) = g_i Q(a_i,t) + h_i \dot{Q}(a_i,t) \tag{6}$$

where g_i and h_i are the displacement and velocity feedback gains of the ith controller respectively, i = 1,2,...L, L being the total number of controllers. The Laplace transform of Eq. (6) results in a relationship which is used to define the transfer function of the ith controller as:

$$\begin{aligned} W_{ci}(p) &= \frac{w_c(b_i,p)}{Q(a_i,p)} \\ &= g_i + h_i p \end{aligned} \tag{7}$$

The schematic which represents the combined interconnected system of the baseline structure and the L active controllers is shown in Fig.2.

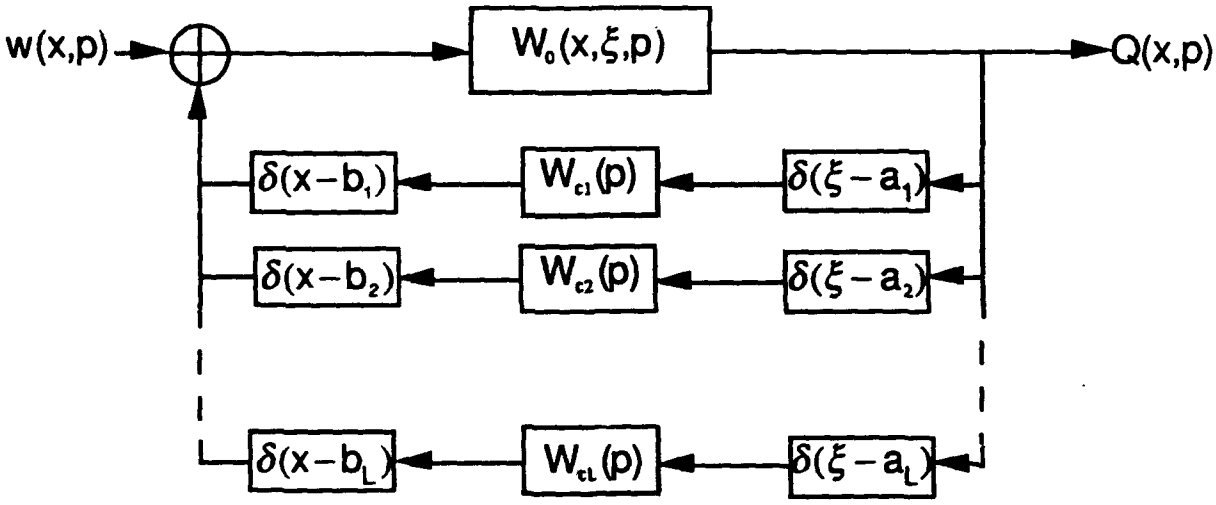

Figure 2. Schematic of Interconnection of Linear Feedback Controllers to Distributed Parameter Baseline Structure.

The transfer function of the combined system shown in Fig. 2 is given by the following integral equation[14]:

$$W(x,\xi,p) = \int W_T(x,\eta,p)W(\eta,\xi,p)d\eta + W_0(x,\xi,p) \tag{8}$$

where,

$$\begin{aligned} W_T(x,\xi,p) &= \int W_0(x,\eta,p)\sum_{i=1}^{L}\delta(\eta - b_i)W_{ci}(p)\delta(\xi - a_i)d\eta \\ &= \sum_{i=1}^{L} W_0(x,b_i,p)W_{ci}(p)\delta(\xi - a_i) \end{aligned} \tag{9}$$

Substituting Eq.(9) into Eq. (8) and performing the integration, the result is,

$$W(x,\xi,p) = \sum_{i=1}^{L} W_0(x,b_i,p)W_{ci}(p)W(a_i,\xi,p) + W_0(x,\xi,p) \tag{10}$$

In order to solve for the quantities $W(a_i,\xi,p)$, i = 1,2,....L, both sides of Eq.(10) are successively multiplied by $\delta(x - a_m)$ and integrations are performed over the x domain for m = 1,2,....L to get:

$$W(a_m,\xi,p) = \sum_{i=1}^{L} W_0(a_m,b_i,p)W_{ci}(p)W(a_i,\xi,p) + W_0(a_m,\xi,p) \tag{11}$$

Eq.(11) is a system of L linear equations defining L unknown quantities. If an (LxL) matrix $[\Omega]$ is defined such that its elements are,

$$\Omega_{i,j} = W_0(a_j,b_i,p)W_{ci}(p) \tag{12}$$

and if an (Lx1) vector $\{\omega\}$ is defined such that its elements are,

$$\omega_i = W(a_i,\xi,p) \tag{13}$$

then the system of Eq. (11) for m = 1,2,....L can be written in a compact form as:

$$\{\omega\} = [\Omega]\{\omega\} + \{\gamma\} \tag{14}$$

where $\{\gamma\}$ is an (Lx1) vector whose elements are,

$$\gamma_j = W_0(a_j,\xi,p) \tag{15}$$

From (14),

$$\{\omega\} = [\mathbf{I} - \Omega]^{-1}\{\gamma\} \tag{16}$$

where $\mathbf{I}$ is the (LxL) identity matrix.

APPLICATION OF COMPUTER ALGEBRA

The general algebraic form of the transfer function of the baseline distributed system is taken to be [15,16]:

$$W_0(x,\xi,p) = \sum_{k=1}^{\infty}\left(\frac{1}{\beta_k^2}\frac{\varphi_{0k}(x)\varphi_{0k}(\xi)}{p^2 - p_{0k}^2}\right) \tag{17}$$

where $\varphi_{0k}(x)$ is the kth orthonormal modal function for the baseline structure, p_{0k} is the corresponding modal parameter and β_k^2 is the weighting factor. Although the summation in Eq. (17) includes an infinite number of terms, the practical implementation of that expression requires that only a finite number of terms be retained. The ability to retain a given number of modes in the algebraic derivation depends on the power and memory of the computer as well as the number of discrete modifications to the baseline structure. The substitution of Eq. (17) into Eq. (16) and the subsequent evaluation and simplification of the transfer function of the combined system as shown in Eq. (10) is performed using the following set of MACSYMA routines:

```
W0(EXX,XXSI,PEE):=BLOCK(
      PURPOSE:"EXPRESSION FOR TRANSFER FUNCTION FOR BASELINE
      STRUCTURE - I.E. THE FUNCTION W0(X,XSI,P)"
      RAT(SUM('PHI(EXX,K)*'PHI(XXSI,K)/(PEE^2-('P0[K]^2),K,N1,N2))/'BSQ)$

GAMMA_VECTOR(XXXSI,ARGP):=BLOCK(
      GAMMA:ZEROMATRIX(NS,1),
      FOR J THRU NS
      DO SETELMX(W0('A[J],XXSI,ARGP),J,1,GAMMA))$

OMEGA_MATRIX(ARGP):=BLOCK(
      CAP_OMEGA:ZEROMATRIX(NS,NS),
      FOR I THRU NS
      DO (
      FOR J THRU NS
      DO (W0IJ:W0('A[J],'B[I],ARGP),
      SETELMX(W0IJ*WCP[I],I,J,CAP_OMEGA))))$

W(EXX,XXSI,PEE,N11,N22,N33):=BLOCK(
      SCALARMATRIXP:FALSE,N1:N11,N2:N22,NS:N33,
      FOR KK FROM N1 THRU N2
      DO STARTP(KK),
      FOR N THRU NS
      DO WCP[N]:RAT(SUBST(PEE,P,WC[N])),
      OMEGA_ MATRIX(PEE), GAMMA_VECTOR(XXSI,PEE),
      MATRIX:IDENT(NS)-CAP_OMEGA,OMEGA:ZEROMATRIX(NS,1),
      INVERSE_MATRIX:RAT(ADJOINT(MATRIX))/RAT(DETERMINANT(MATRIX)),
      POLY:DENOM(INVERSE_MATRIX[1,1]),
      OMEGA:RAT(INVERSE_MATRIX . GAMMA),
      W1:RAT(SUM(W0(EXX,B[I],PEE)*WCP[I]*OMEGA[I,1],I,1,NS)+
      W0(EXX,XXSI,PEE)), "DONE")$
```

W1 gives the expression for the transfer function of the combined system; POLY is the characteristic polynomial of the combined system. In order to cast the resultant transfer function into the form of Eq.(17) for the combined system, the system parameters p_{1k} are determined as the roots of the characteristic polynomial of the system. In the above routines, it is possible to consider any range of terms [N11,N22] in the baseline transfer

function series, as well as any number [N33] of discrete attachments to the baseline system. The computer-algebraic results that will be presented in the next section have been generalized to the case of an arbitrary number of discrete attachments. This was done by mathematical induction, based on the results provided by MACSYMA for different number of attachments specified in the function calls.

SECTION II. COMPUTER-ALGEBRAIC RESULTS

Some results of the derivation of the characteristic polynomials for an arbitrary number of attachments using one- and two terms in the base-line transfer function series, are presented in this section. These derivations were performed on the Symbolics 3620. A uniform one-dimensional baseline structure was assumed in this study, so that $\beta_k^2=\beta^2$ for all the k's.

One-term derivation:

In order to simplify the analysis of the sensitivity of individual modal parameters to the active controller design variables such as sensor/actuator placement and displacement and velocity feedback gains, the assumption is made that the modes of the baseline structure are uncoupled (which is reasonable if the baseline structure is very lightly damped). This allows the transfer function given by Eq.(17), for frequencies close to the resonance of a specified mode, to be approximated by one term in that series which represents the contribution of that mode. The characteristic polynomial for the closed-loop system is then obtained as:

$$\text{POLYNOMIAL}(1) = C_2^{(1)} p^2 + C_0^{(1)}(p) \tag{18}$$

where,

$$C_0^{(1)}(p) = -\beta^2 p_{0n_1}^2 - \sum_{i=1}^{L} \{W_{ci}(p)\varphi_{0n_1}(a_i)\varphi_{0n_1}(b_i)\} \tag{19}$$

and,

$$C_2^{(1)} = \beta^2 \tag{20}$$

Note that the polynomial in Eq. (18) is not yet fully explicit in p until the expressions for $W_{ci}(p)$ are substituted into Eq. (19). If these functions are as shown in Eq.(7) then,

$$C_0^{(1)}(p) = -\beta^2 p_{0n_1}^2 - \sum_{i=1}^{L} \{(g_i + h_i p)\varphi_{0n_1}(a_i)\varphi_{0n_1}(b_i)\} \tag{21}$$

So that for this class of active controller design, and using the one-term approximation to the baseline transfer function, the characteristic polynomial in p whose roots are the

system parameters, is given by:

$$\text{POLYNOMIAL}(1) = \left\{\beta^2\right\} p^2 - \left\{\sum_{i=1}^{L}\{h_i\, \varphi_{0n_1}(a_i)\varphi_{0n_1}(b_i)\}\right\} p$$
$$- \left\{\beta^2 p_{0n_1}^2 + \sum_{i=1}^{L}\{g_i\, \varphi_{0n_1}(a_i)\varphi_{0n_1}(b_i)\}\right\} \tag{22}$$

Two-term derivation:

For closely coupled modes, the preceding approximation may not give adequate results. The next level of refinement is to consider the combined contribution of two neighboring modes. For this case, two terms are retained in Eq.(17), and the polynomial derived by the computer-algebraic routine is:

$$\text{POLYNOMIAL}(2) = C_4^{(2)} p^4 + C_2^{(2)}(p)\, p^2 + C_0^{(2)}(p) \tag{23}$$

where,

$$C_4^{(2)} = \left(\beta^2\right)^2 \tag{24}$$

$$C_2^{(2)}(p) = -\left(\beta^2\right)^2 \sum_{j=1}^{2}\left\{p_{0n_j}^2\right\} - \sum_{i=1}^{L}\left\{W_{ci}(p)\sum_{j=1}^{2}\left[\beta^2 \varphi_{0n_j}(a_i)\varphi_{0n_j}(b_i)\right]\right\}$$
$$= -\left(\beta^2\right)^2 \sum_{j=1}^{2}\left\{p_{0n_j}^2\right\} - \sum_{i=1}^{L}\left\{W_{ci}(p)\left\lfloor \beta\varphi_{0n_1}(a_i) \quad \beta\varphi_{0n_2}(a_i)\right\rfloor \begin{Bmatrix}\beta\varphi_{0n_1}(b_i)\\ \beta\varphi_{0n_2}(b_i)\end{Bmatrix}\right\} \tag{25}$$

and,

$$C_0^{(2)}(p) = \left(\beta^2 p_{0n_1}^2\right)\cdot\left(\beta^2 p_{0n_2}^2\right)$$
$$+\sum_{i=1}^{L}\left\{W_{ci}(p)\left\lfloor \beta\varphi_{0n_1}(a_i) \quad \beta\varphi_{0n_2}(a_i)\right\rfloor \begin{bmatrix} p_{0n_2}^2 & 0\\ 0 & p_{0n_1}^2\end{bmatrix}\begin{Bmatrix}\beta\varphi_{0n_1}(b_i)\\ \beta\varphi_{0n_2}(b_i)\end{Bmatrix}\right\}$$
$$+\sum_{i=1}^{L}\sum_{j>i}^{L}\left\{\begin{array}{c} W_{ci}(p)W_{cj}(p)\left(\left\lfloor \varphi_{0n_1}(a_i) \quad -\varphi_{0n_2}(a_i)\right\rfloor \begin{Bmatrix}\varphi_{0n_2}(a_j)\\ \varphi_{0n_1}(a_j)\end{Bmatrix}\right)\\ \times \left(\left\lfloor \varphi_{0n_1}(b_i) \quad -\varphi_{0n_2}(b_i)\right\rfloor \begin{Bmatrix}\varphi_{0n_2}(b_j)\\ \varphi_{0n_1}(b_j)\end{Bmatrix}\right)\end{array}\right\} \tag{26}$$

As mentioned earlier, the explicit dependence of the polynomial on the Laplace

variable p will be determined when the appropriate expressions are substituted for the functions $W_{Ci}(p)$. If the controller transfer functions given in Eq.(7) are substituted into Eq. (25) and (26), then following a collection of the coefficients of the powers of p in the polynomial of Eq. (23), the result is:

$$\text{POLYNOMIAL}(2) = \alpha_4 p^4 + \alpha_3\ p^3 + \alpha_2\ p^2 + \alpha_1\ p + \alpha_0 \tag{27}$$

where,

$$\alpha_4 = \left(\beta^2\right)^2 \tag{28}$$

$$\alpha_3 = -\sum_{i=1}^{L} \left\{ h_i \left\lfloor \beta\varphi_{0n_1}(a_i) \quad \beta\varphi_{0n_2}(a_i) \right\rfloor \begin{Bmatrix} \beta\varphi_{0n_1}(b_i) \\ \beta\varphi_{0n_2}(b_i) \end{Bmatrix} \right\} \tag{29}$$

$$\begin{aligned} \alpha_2 = & -\left(\beta^2\right)^2 \sum_{j=1}^{2} \left\{ p_{0n_j}^2 \right\} - \sum_{i=1}^{L} \left\{ g_i \left\lfloor \beta\varphi_{0n_1}(a_i) \quad \beta\varphi_{0n_2}(a_i) \right\rfloor \begin{Bmatrix} \beta\varphi_{0n_1}(b_i) \\ \beta\varphi_{0n_2}(b_i) \end{Bmatrix} \right\} \\ & + \sum_{i=1}^{L} \sum_{j>i}^{L} \left\{ \begin{array}{l} h_i h_j \left(\left\lfloor \varphi_{0n_1}(a_i) \quad -\varphi_{0n_2}(a_i) \right\rfloor \begin{Bmatrix} \varphi_{0n_2}(a_j) \\ \varphi_{0n_1}(a_j) \end{Bmatrix} \right) \\ \qquad \times \left(\left\lfloor \varphi_{0n_1}(b_i) \quad -\varphi_{0n_2}(b_i) \right\rfloor \begin{Bmatrix} \varphi_{0n_2}(b_j) \\ \varphi_{0n_1}(b_j) \end{Bmatrix} \right) \end{array} \right\} . \end{aligned} \tag{30}$$

$$\begin{aligned} \alpha_1 = & \sum_{i=1}^{L} \left\{ h_i \left\lfloor \beta\varphi_{0n_1}(a_i) \quad \beta\varphi_{0n_2}(a_i) \right\rfloor \begin{bmatrix} p_{0n_2}^2 & 0 \\ 0 & p_{0n_1}^2 \end{bmatrix} \begin{Bmatrix} \beta\varphi_{0n_1}(b_i) \\ \beta\varphi_{0n_2}(b_i) \end{Bmatrix} \right\} \\ & + \sum_{i=1}^{L} \sum_{j>i}^{L} \left\{ \begin{array}{l} \left(g_i h_j + g_j h_i\right) \times \left(\left\lfloor \varphi_{0n_1}(a_i) \quad -\varphi_{0n_2}(a_i) \right\rfloor \begin{Bmatrix} \varphi_{0n_2}(a_j) \\ \varphi_{0n_1}(a_j) \end{Bmatrix} \right) \\ \qquad \times \left(\left\lfloor \varphi_{0n_1}(b_i) \quad -\varphi_{0n_2}(b_i) \right\rfloor \begin{Bmatrix} \varphi_{0n_2}(b_j) \\ \varphi_{0n_1}(b_j) \end{Bmatrix} \right) \end{array} \right\} \end{aligned} \tag{31}$$

and,

$$
\begin{aligned}
\alpha_0 = {} & \left(\beta^2 p_{0n_1}^2\right)\cdot\left(\beta^2 p_{0n_2}^2\right) \\
& + \sum_{i=1}^{L}\left\{ g_i \lfloor \beta\varphi_{0n_1}(a_i) \quad \beta\varphi_{0n_2}(a_i) \rfloor \begin{bmatrix} p_{0n_2}^2 & 0 \\ 0 & p_{0n_1}^2 \end{bmatrix} \begin{Bmatrix} \beta\varphi_{0n_1}(b_i) \\ \beta\varphi_{0n_2}(b_i) \end{Bmatrix} \right\} \\
& + \sum_{i=1}^{L}\sum_{j>i}^{L} \left\{ \begin{array}{l} (g_i g_j)\times\left(\lfloor \varphi_{0n_1}(a_i) \quad -\varphi_{0n_2}(a_i) \rfloor \begin{Bmatrix} \varphi_{0n_2}(a_j) \\ \varphi_{0n_1}(a_j) \end{Bmatrix} \right) \\ \qquad \times \left(\lfloor \varphi_{0n_1}(b_i) \quad -\varphi_{0n_2}(b_i) \rfloor \begin{Bmatrix} \varphi_{0n_2}(b_j) \\ \varphi_{0n_1}(b_j) \end{Bmatrix} \right) \end{array} \right\}
\end{aligned}
\tag{32}
$$

As far as the computer algebraic procedure is concerned, any number of terms in baseline transfer function expression can be used. However, it is clear that such expressions will be complicated and are better left in the memory of the computer.

SECTION III. SENSITIVITY ANALYSIS

Lightly coupled modes:

For the purpose of this paper, which is to examine simple but intuitive relationships between the closed-loop system parameters and the design variables of the active controller such as the actuator/sensor pair placement and the displacement and velocity feedback gains, it is assumed that the uncontrolled structure is very lightly damped, and hence its orthonormal modes are weakly coupled. This assumption allows the one-term derivation that resulted in Eq.22. Moreover, since interest here lies in sensitivities of the modal parameters, rather than their exact values, this simple result remains useful for developing insight into how the controller design affects the closed-loop parameters. Equating the polynomial of Eq.22 to zero and solving for the real and imaginary parts of p_{1n1}, with the assumption that the baseline structure is undamped (i.e., $p_{0n1} = i\omega_{0n1}$), the frequencies and exponential growth rates of the closed-loop modes are;

$$
\omega_{1n_1} = \sqrt{\omega_{0n_1}^2 - \left\{ \frac{1}{2\beta^2}\sum_{i=1}^{L}\{h_i\,\varphi_{0n_1}(a_i)\varphi_{0n_1}(b_i)\} \right\}^2 - \frac{1}{\beta^2}\sum_{i=1}^{L}\{g_i\,\varphi_{0n_1}(a_i)\varphi_{0n_1}(b_i)\}}
\tag{33}
$$

$$
\sigma_{1n_1} = \frac{1}{2\beta^2}\sum_{i=1}^{L}\{h_i\,\varphi_{0n_1}(a_i)\varphi_{0n_1}(b_i)\}
\tag{34}
$$

As suspected, the damping of the closed-loop system is controlled by the velocity feedback gain, whereas the frequency is affected by both the velocity and displacement

feedback gains. The sensor/actuator placement controls how these feedback gains influence the frequencies and damping of the participating modes of the baseline structure. This effect is more clearly displayed by the sensitivity of the growth rate to the velocity feedback gains as well as the sensitivity of the frequencies to the displacement feedback gains:

$$\frac{\partial \sigma_{1n_1}}{\partial h_i} = -\frac{1}{2}\frac{\partial \omega_{1n_1}^2}{\partial g_i} = \frac{1}{2\beta^2}\varphi_{0n_1}(a_i)\varphi_{0n_1}(b_i) \tag{35}$$

When the sensor and actuator of the i-th controller are collocated (i.e. $a_i = b_i$), the right hand side (RHS) of Eq. 35 is positive, and all structural modes with non-zero values of the orthornormal modes at the controller location. are guaranteed to be damped by a negative velocity feedback gain. For controllers with non-collocated sensor/actuator pairs, the RHS of Eq.35 could be positive or negative for different modes of the baseline structure. The baseline modes for which the product $\varphi(a_i)\varphi(b_i)$ is positive, will be damped for negative velocity feedback gains, whereas those modes with a negative product of $\varphi(a_i)\varphi(b_i)$ could experience destabilization as a result of negative velocity feedback gain.

$$\frac{\partial \sigma_{1n_1}}{\partial g_i} = 0 \tag{36}$$

$$\frac{\partial \omega_{1n_1}^2}{\partial h_i} = -\left\{\frac{1}{2\beta^4}\sum_{k=1}^{L}\left\{h_k\varphi_{0n_1}(a_k)\varphi_{0n_1}(b_k)\right\}\right\}\varphi_{0n_1}(a_i)\varphi_{0n_1}(b_i) \tag{37}$$

As expected, the growth rate is not affected by the displacement feedback. However, the closed loop frequency is sensitive to the velocity feedback as well as the displacement feedback. For a single sensor/actuator pair (L=1), the sign of the RHS of Eq.37 is dictated by the sign of the velocity feedback. In the following section, the numerical example of a uniform cantilevered Euler-Bernoulli beam is used to illustrate the feedback gain sensitivities of the closed-loop growth rate, as the sensor/actuator pair placement is varied, both for collocated and non-collocated controllers.

Numerical Example:

Consider a uniform cantilevered Euler-Bernoulli beam, with parameters as shown in Fig. 1, where the first five orthonormal modes have also been displayed. Suppose a single sensor/actuator pair is to be employed to control the vibrations of this beam using displacement and velocity feedback. Three situations will be examined:

(1) the sensor and actuator are collocated at the same spanwise coordinate; (2) the sensor and actuator are not collocated, with the sensor always at the tip of the beam; and (3) the sensor and actuator are not collocated, with the sensor at midspan. In each of these situations, the growth rate sensitivity to velocity feedback gain for different locations of the actuator, will be studied. The growth rate sensitivity to velocity feedback gain is characterized by the partial derivative of the growth rate with respect to the velocity feedback gain. As given by Eq. 35, this quantity depends on the locations of the sensor and actuator. For vibration suppression, it is required that the growth rate be negative, and also that its sensitivity to velocity feedback gain be of the same sign *for all the modes of the structure.* If the sign of this sensitivity is not the same for all modes, velocity feedback gains which suppress the vibration of certain modes, will tend to cause increased response others.

The plots of the growth rate sensitivity to velocity feedback gains for different locations of the actuator are shown in Fig. 2-4. Fig. 2 is for the case where the sensor and actuator pair are collocated, whereas in Fig. 3 and 4, the sensor and actuator are not collocated. In Fig. 3, the sensor is always at the tip, and Fig.4 is for the case where the sensor is always at midspan. When the sensor is collocated with the actuator, as in Fig.2 for all locations of the actuator, or in Fig. 3 when the actuator is at the tip, or in Fig. 4 when the actuator is at midspan, the growth rate sensitivity to velocity feedback retains the same sign for all the modes of the beam. Collocated sensor/actuator pairs near the tip of the cantilevered beam have higher sensitivities of the growth rate of the lower modes to velocity feedback, than the higher modes. This situation is reversed near the root of the beam. When the sensor is not collocated with the actuator, there are sign reversals of the growth rate sensitivity to velocity feedback, for different modes of the beam. In these cases, the same velocity feedback gain which increases the damping of certain modes, will reduce the damping of others. These effects are well known, and are not surprising. What is interesting in the present approach is that these sensitivities can be quantified explicitly. Trade-offs can be made with regard to the selection of modes which need maximum sensitivity, at the expense of other modes which may not be critical in a given application.

This example has been presented as a simple illustration of how the results of this analysis could be used in guiding the selection of sensor/actuator placements. In most practical applications, the orthonormal modes may not be available in analytical form. It may become necessary to conduct experimental modal testing, in order to obtain the modal data required by this approach. Regardless of how the modal data is obtained, the simple expressions derived in this paper can be used to obtain preliminary assessments of the most advantageous placement of sensor/actuator pairs for active vibration control.

SECTION IV. CONCLUSION

The sensitivities of closed-loop system parameters to displacement and velocity feedback gains are important considerations for the placement of sensors and actuators for active suppression of structural vibrations. Whereas optimal controller design methods using modern control theory can yield the optimal feedback gains, they do not provide insights into to the placement of the sensors and the actuators for the best effect. Using computer algebra, explicit expressions have been derived for the sensitivities of the closed-loop system parameters such as resonant frequency and exponential growth rates, to velocity and displacement feedback gains. These expressions make it possible to select locations for sensors and actuators, at which the closed-loop system parameters have the desired sensitivities to the velocity and displacement feedback gains. Numerical examples based on a cantilevered uniform beam were used to illustrate the application of this method, and to show that it is possible to conduct a rational assessment of the most advantageous locations of sensors and actuators for active control.

REFERENCES

1. NASA/DOD Control/Structures Interaction Technology - Parts 1 and 2 NASA Conference Publication 2447, November 1986.

2. Atluri, S.N., Amos, A.K., (Ed.), "Large Space Structures: Dynamics and Control". Springer-Verlag 1988.

2a. Meirovitch, L., "Control of Distributed Structures", pp. 195-212 of Ref. [2].

2b. Lynch, P.J., Banda, S.S., "Active Control for Vibration and Damping", pp. 239-262 of Ref. [2].

2c. Junkins, J.L., Rew, D. W., "Unified Optimization of Structures and Controllers", pp. 323-354 of Ref. [2].

3. Special Section, "Large Space Structure Control: Early Experiments," AIAA Journal of Guidance, Control, and Dynamics, Vol. 7, September-October 1984.

4. O'Donoghue, P.E., Atluri, S.N., "Control of Dynamic Response of A Continuum Model of A Large Space Structure", AIAA/ASME/ASCE/AHS 26th Structures, Structural Dynamics and Materials Conference, Part 2, Orlando Florida, April 1985, pp. 31-42.

5. Horner, G.C., Walz, J.E., "A Design Technique for Determining Actuator Gains in Spacecraft Vibration Control", AIAA/ASME/ASCE/AHS 26th Structures, Structural Dynamics and Materials Conference, Part 2, Orlando Florida, April 1985, pp. 143-151.

6. Garcia, E., Inman, D.J., "Control Formulations for Vibration Suppression of an Active Structure in Slewing Motions", ASME Publication DSC-Vol. 20 - Advances in Dynamics and Control of Flexible Spacecraft and Space-Based Manipulations - (S.M. Joshi, T.E. Alberts, Y.P. Kakad, Editors), November 1990, pp. 1-5.

7. Fleming, F.M., Crawley, E.F., "The Zeroes of Controlled Structures: Sensor/Actuator Attributes and Structural Modelling", AIAA/ASME/ASCE/AHS 32nd Structures, Structural Dynamics and Materials Conference, Part 3, Baltimore MD, April 1991, pp. 1806-1816.

8. Burdisso, R.A., Fuller, C.R., "Eigenproperties of Feedforward Controlled Flexible Structures", Proceedings of the Conference on Recent Advances in Active Control of Sound and Vibration, VPI & SU, Blacksburg VA, April 1991, pp. 851-862.

9. Rand, R.H., "Computer Algebra in Applied Mathematics: An Introduction to MACSYMA, Pitman, 1984.

10. Pavelle, R., Edtor, Applications of Computer Algebra, Kluwer, 1985.

11. Fabunmi, J.A., "Analysis of Modes and Frequencies of Modified Structures Using Computer Algebra", Proceedings International Conference on Noise and Vibration '89, Aug. 16-18, 1989, Singapore.

12. Fabunmi, J.A., Chang, P.C., "Green's Function Approach to the Vibration Analysis of Beams Modified by Discrete Spring-Mass Attachments", AEDAR Technical Paper ATP90-01, March 1990.

13. Juang J.-N., Phan M., "Robust Controller Designs for Second Order Dynamic Systems: A Virtual Passive Approach", AIAA/ASME/ASCE/AHS 32nd Structures, Structural Dynamics and Materials Conference, Part 3, Baltimore MD, April 1991, pp. 1796-1805.

14. Butkovskyi, A.G., "Structural Theory of Distributed Systems". Ellis Horwood Ltd., 1983.

15. Butkovskyi, A.G., "Green's Functions and Transfer Functions Handbook". Ellis Horwood Ltd., Halsted Press, 1982.

16. Keener, J.P., "Principles of Applied Mathematics: Transformation and Approximation". Addison-Wesley, 1988.

n_1	ω_{0n_1}	A	B	C	D	$\varphi_{0n_1}(X)$
1	3.516	0.02417	4.138	0.01875	3.038	$A(B(\cos(Cx)-\cosh(Cx))-D(\sin(Cx)-\sinh(Cx)))$
2	22.034	0.00186	53.645	0.04694	54.636	
3	61.697	7.67e-5	1289.986	0.07854	1288.985	
4	120.902	0.10235	-	0.10996	-	$A(\cos(Cx)-\sin(Cx)-e^{-Cx})$
5	199.860	0.10182	-	0.14137	-	

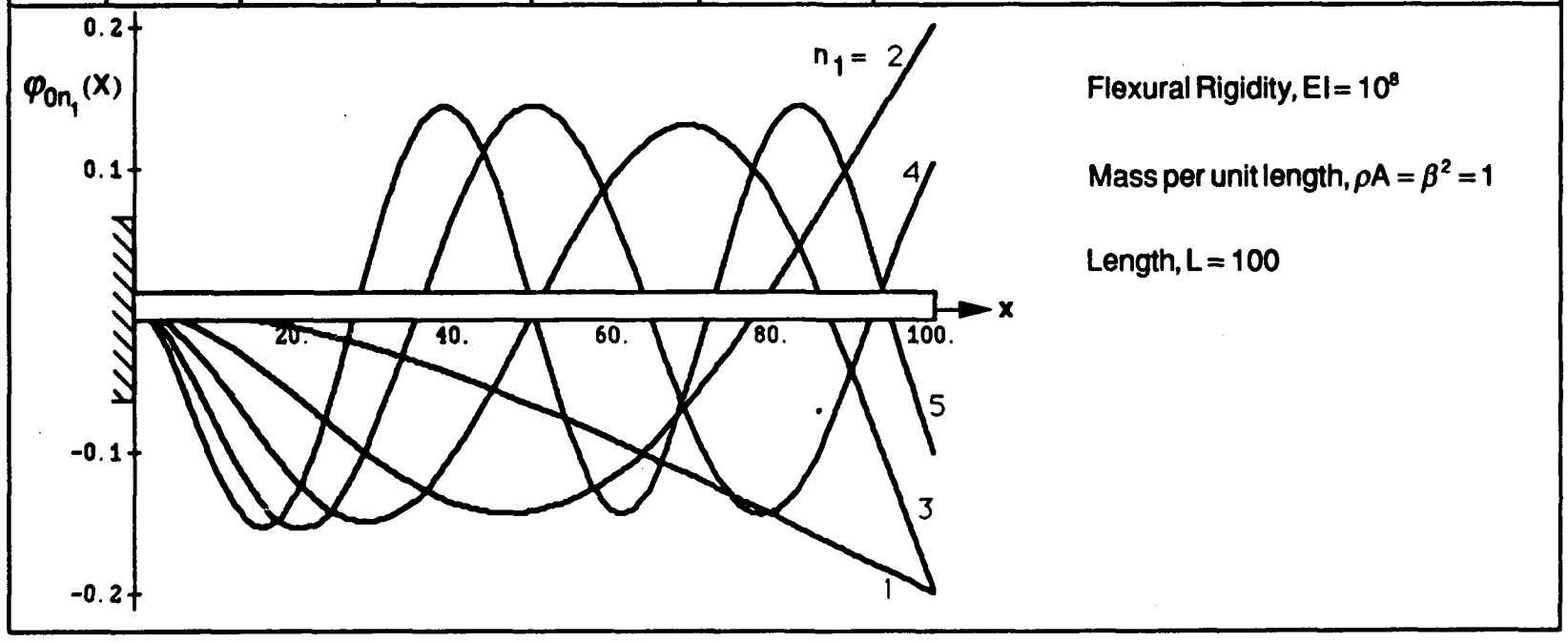

Figure 1. The First Five Orthonormal Modes of a Uniform Cantilevered Euler-Bernoulli Beam

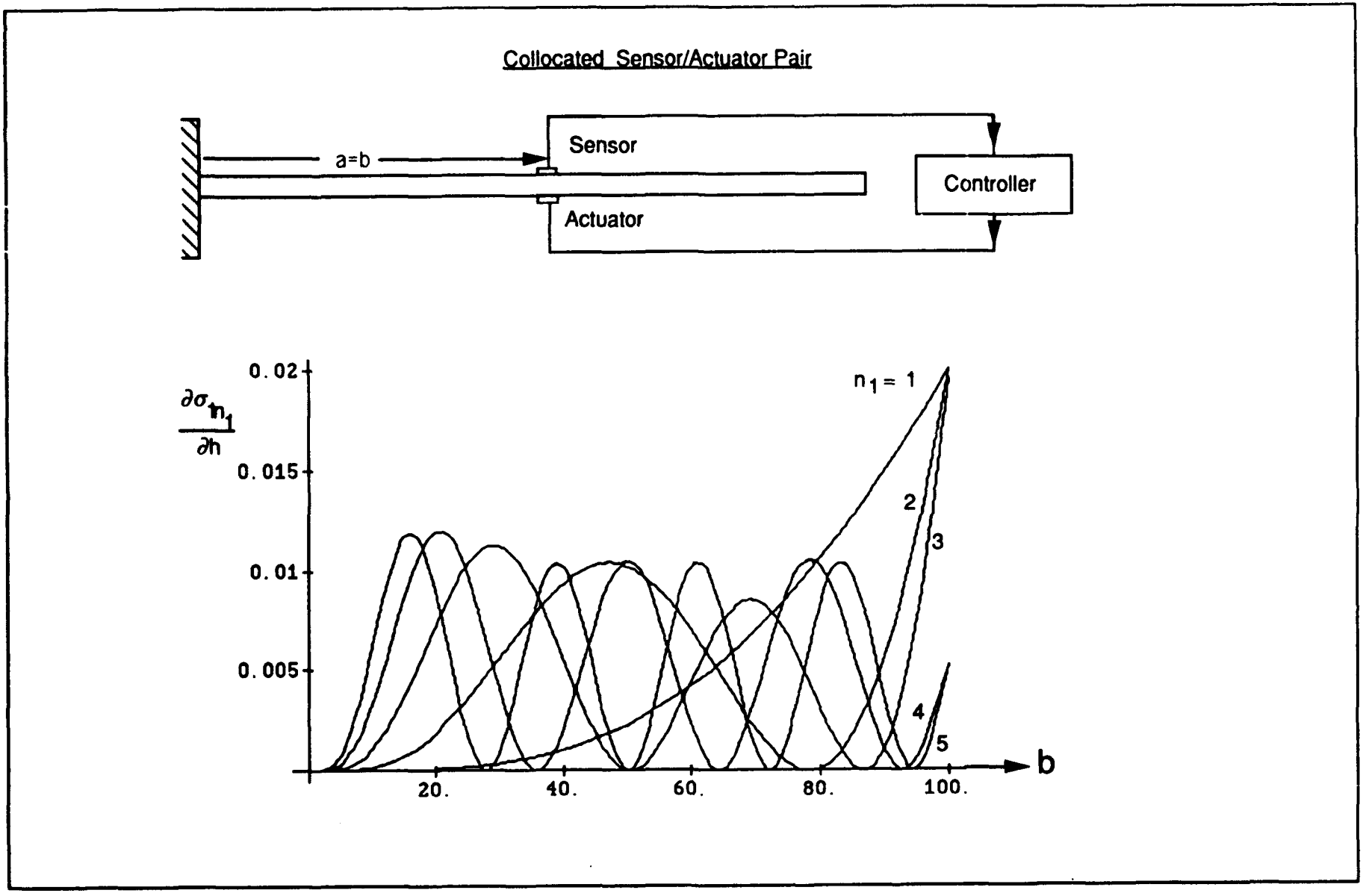

Figure 2. Effect of Actuator Placement on Closed-Loop Damping Sensitivity to Velocity Feedback - Collocated Sensor/Actuator Pair

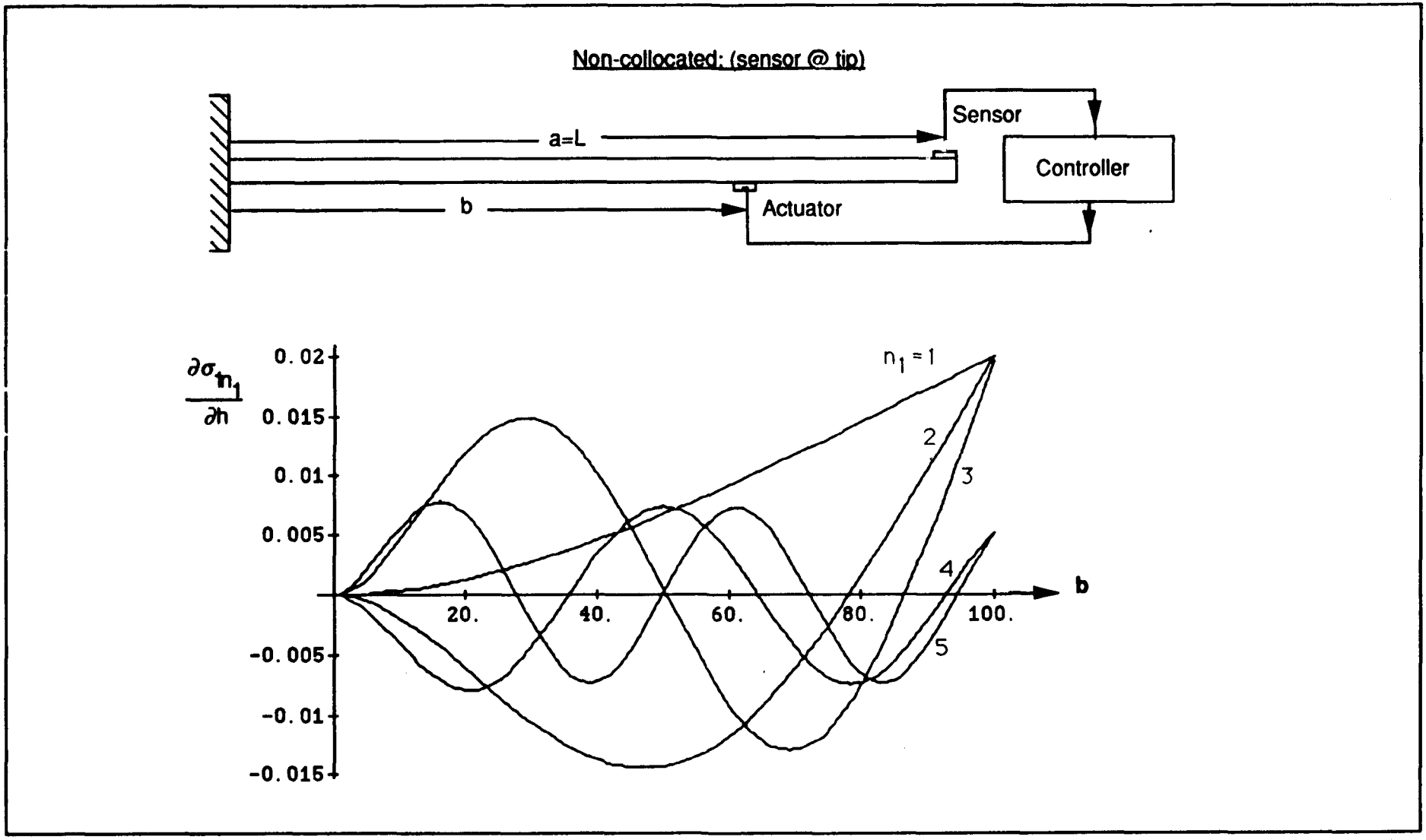

Figure 3. Effects of Actuator Placement on Closed-loop Damping Sensitivity to Velocity Feedback - Non Collocated Sensor/Actuator Pair; Sensor @ Tip

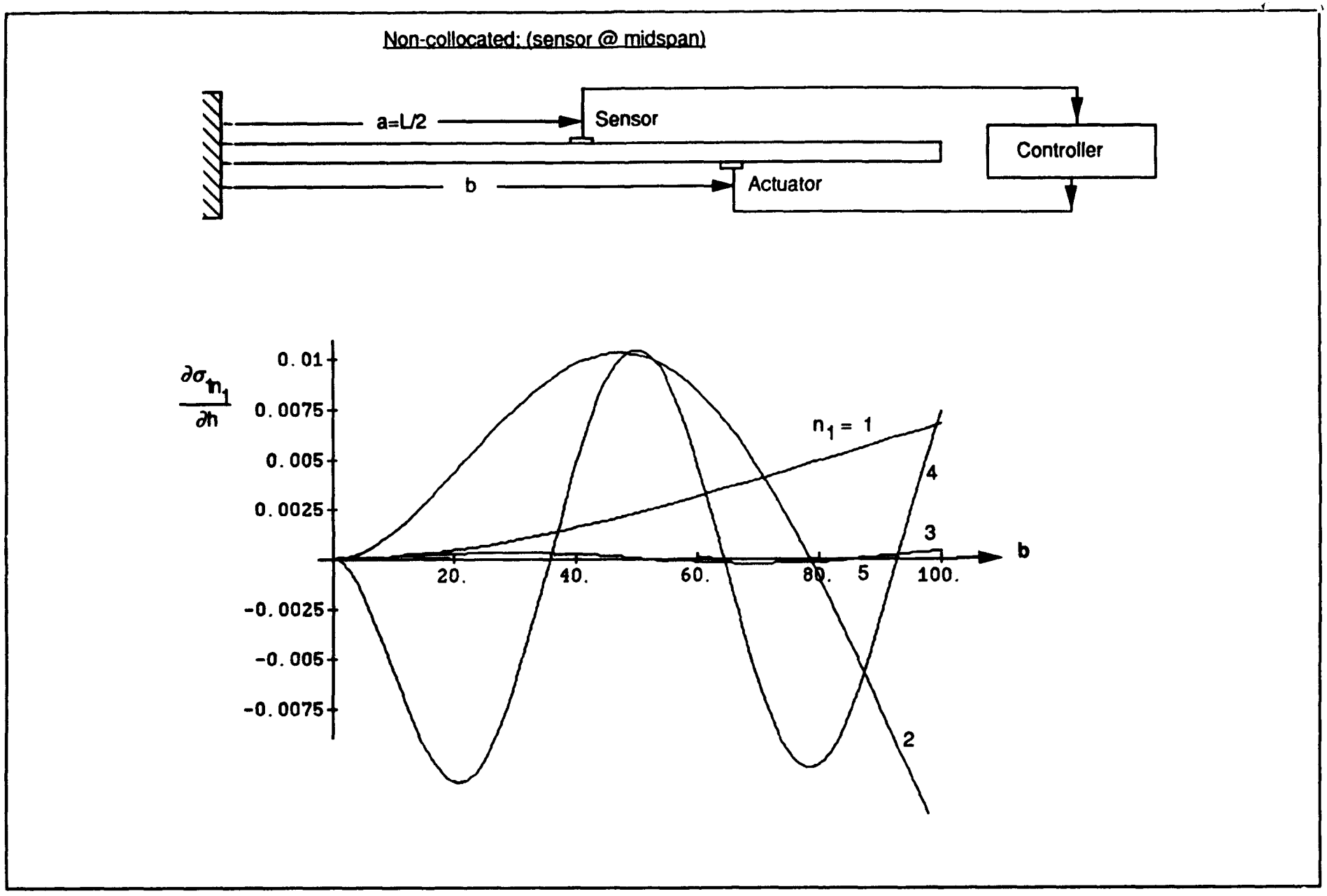

Figure 4. Effects of Actuator Placement on Closed-loop Damping Sensitivity to Velocity Feedback - Non Collocated Sensor/Actuator Pair; Sensor @ Midspan.