AD-A255 024

DTIC
ELECTE
SEP 1 1992
S C D

STRUCTURED ANALYSIS/DESIGN

LSA TASK 402

EARLY FIELDING ANALYSIS

SUBTASK 402.2.4

COMBAT RESOURCE REQUIREMENTS

APJ 966-262

APJ

MILITARY & SCIENTIFIC RESEARCH

AMERICAN POWER JET CO. RIDGEFIELD N.J.

DISTRIBUTION STATEMENT A
Approved for public release;
Distribution Unlimited

92-24182

92 8 31 092

SECURITY CLASSIFICATION OF THIS PAGE

REPORT DOCUMENTATION PAGE

Form Approved
OMB No. 0704-0188

1a. REPORT SECURITY CLASSIFICATION UNCLASSIFIED	1b. RESTRICTIVE MARKINGS
2a. SECURITY CLASSIFICATION AUTHORITY	3. DISTRIBUTION/AVAILABILITY OF REPORT
2b. DECLASSIFICATION/DOWNGRADING SCHEDULE	UNLIMITED
4. PERFORMING ORGANIZATION REPORT NUMBER(S)	5. MONITORING ORGANIZATION REPORT NUMBER(S)
6a. NAME OF PERFORMING ORGANIZATION AMCCOM, Army 6b. OFFICE SYMBOL (If applicable) AMSMC-MAE-EA	7a. NAME OF MONITORING ORGANIZATION
6c. ADDRESS (City, State, and ZIP Code) Rock Island Arsenal Rock Island, IL 61299-6000	7b. ADDRESS (City, State, and ZIP Code)
8a. NAME OF FUNDING/SPONSORING ORGANIZATION 8b. OFFICE SYMBOL (If applicable)	9. PROCUREMENT INSTRUMENT IDENTIFICATION NUMBER
8c. ADDRESS (City, State, and ZIP Code)	10. SOURCE OF FUNDING NUMBERS PROGRAM ELEMENT NO. / PROJECT NO. / TASK NO. / WORK UNIT ACCESSION NO.

11. TITLE (Include Security Classification) Structured Analysis and Structured Design for the Logistic Support Analysis (LSA) Tasks, LSA Subtask 402.2.4, "Combat Resource Requirements", (APJ 966-262).

12. PERSONAL AUTHOR(S)
DUCLOS, RONALD SHEPHERD, NED kmk

13a. TYPE OF REPORT	13b. TIME COVERED	14. DATE OF REPORT (Year, Month, Day)	15. PAGE COUNT
FINAL	FROM _____ TO _____	Nov 1989	62

16. SUPPLEMENTARY NOTATION

17. COSATI CODES		
FIELD	GROUP	SUB-GROUP

18. SUBJECT TERMS (Continue on reverse if necessary and identify by block number)
STRUCTURED ANALYSIS, STRUCTURED DESIGN, LOGISTIC SUPPORT ANALYSIS, LSA, DATA FLOW DIAGRAMS, DFDs, PROCESSES, DATA FLOWS, DATA STORES, EXTERNAL over

19. ABSTRACT (Continue on reverse if necessary and identify by block number)

This report consolidates the Structured Analysis and Structured Design for the Logistic Support Analysis (LSA) Tasks. Included are the Data Flow Diagrams (DFDs) for the LSA Subtask 402.2.4, "Combat Resource Requirements", with the corresponding descriptions of the processes, data flows, data stores, and external entities identified on each DFD. The DFDs are further developed into procedures which identifies how to use the data to carry out the processes and accomplish the LSA Subtask. Venture Evaluation Review Technique (VERT) Batch Input files are also provided to assist, as tools, giving both technical and managerial aspects of a task.

20. DISTRIBUTION/AVAILABILITY OF ABSTRACT ☒ UNCLASSIFIED/UNLIMITED ☐ SAME AS RPT. ☐ DTIC USERS	21. ABSTRACT SECURITY CLASSIFICATION UNCLASSIFIED
22a. NAME OF RESPONSIBLE INDIVIDUAL NED SHEPHERD	22b. TELEPHONE (Include Area Code) (309) 782-2479 22c. OFFICE SYMBOL AMSMC-MAE-EA

DD Form 1473, JUN 86 Previous editions are obsolete. SECURITY CLASSIFICATION OF THIS PAGE

APJ 966-262

STRUCTURED ANALYSIS/DESIGN

LSA TASK 402

EARLY FIELDING ANALYSIS

SUBTASK 402.2.4

COMBAT RESOURCE REQUIREMENTS

Accession For
NTIS GRA&I ☑
DTIC TAB ☐
Unannounced ☐
Justification
By
Distribution/
Availability Codes
Dist | Avail and/or Special
A-1

under

CONTRACT DAAA21-86-D-0025

for

HQ US AMCCOM

DTIC QUALITY INSPECTED 3

INTEGRATED LOGISTIC SUPPORT OFFICE
AMSMC-LSP
ROCK ISLAND, IL

by

AMERICAN POWER JET COMPANY

RIDGEFIELD, NJ FALLS CHURCH, VA

FT. EUSTIS, VA ST. LOUIS, MO

November 1989

FOREWORD

APJ, under contract to HQs, AMCCOM, has initiated the automation of the LSA Tasks (MIL-STD-1388-1) and the assessment of the ILS elements (AR 700-127). A major goal is to unify military and contractor approach to the performance of ILS and LSA.

Detailed to meet all requirements of ILS and LSA, the automated process will continue to provide full flexibility in selecting tasks and elements to be addressed at each life cycle stage. A major advantage of this approach is to insure that the application of each task element is consistent with prescribed Army policies and procedures.

This report consolidates the Structured Analysis and Structured Design under one cover for the respective LSA Tasks. Structured Analysis provides a logical model of the method to perform an LSA Task. This logical model facilitates the development of a Structured Design that provides the detailed procedures to perform the analysis. Both the logical model and detailed procedures are used to develop the application software programs which will be provided to Government and contractor personnel to assist in the performance of the LSA Task.

Included in this report are the Data Flow Diagrams (DFDs) for LSA Subtask 402.2.4, "Combat Resource Requirements" and the corresponding descriptions of the processes, data flows, data stores, and external entities identified on each DFD (Annex B). In addition the DFDs are further developed into step-by-step procedures (Annex C) which identifies how to use the data to carry out the processes which ultimately lead to accomplishing the LSA Subtask.

To assist managers in planning and controlling this task, Venture Evaluation Review Technique (VERT) Batch Input files are provided (Annex D). These VERT tools provide government agencies with complete packages, to give contractors, that cover both technical and managerial aspects of a task. This approach establishes a standardized form of communication and management between contractors performing the task and government personnel reviewing the task.

To view this work in context, Annex E of this report also presents a brief overview of Structured Analysis and its place in the overall systems development process. The overview and certain portions of the introductory text are repeated verbatim in every report in this series so that each report is free standing.

TABLE OF CONTENTS

TITLE	PAGE
Purpose	1
Background	1
Scope	1
LSA Subtask 402.2.4 Description	2
Approach	3
LSA Subtask 402.2.4 Combat Resource Requirements	
ANNEX A: LSA Task 402 Description Combat Resource Requirements	A-1
ANNEX B: LSA Subtask 402.2.4 Combat Resource Requirements Data Flow Diagrams and Data Dictionary	B-1
ANNEX C: LSA Subtask 402.2.4 Combat Resource Requirements Structured Design	C-1
ANNEX D: LSA Subtask 404.2.4 VERT Application Methodology	D-1
VERT Batch Input Files	D-6
ANNEX E: Structured Systems Analysis - Fundamentals	E-1

LIST OF FIGURES

FIGURE NO.	TITLE	PAGE
1	Structured Analysis and Structured Systems Design Organization	E-5
2	Standard DFD Symbol Definitions	E-6

INTRODUCTION

PURPOSE

The purpose of this report series is to present the results of the APJ Structured Analysis/Design under Contract DAAA21-86-D-0025 for coordination with the AMCCOM Program Manager prior to in-depth programming of ILS and LSA functions and processes. LSA Task 402 "Early Fielding Analysis", ("LSA Subtask 402.2.4 "Combat Resource Requirements") is addressed in this report.

BACKGROUND

The Department of the Army has a requirement for management control over contractor and Government agency response to the requirements of AR 700-127, "Integrated Logistic Support", and MIL-STD-1388-1, "Logistic Support Analysis". HQs AMCCOM has initiated action to structure each of the LSA tasks, the assessment of each ILS element, the form of the results, and the detailed processes to insure consistency with current Army policies, procedures, and techniques.

This approach (undertaken by AMCCOM and APJ) will insure uniformity in efforts and products, reproducibility of analyses, and a well-defined structure which can be coordinated among all participants in the logistic process to arrive at common understanding and procedures.

SCOPE

This report summarizes the results of the Structured Analysis of the identification of LSA Task 402 "Early Fielding Analysis", LSA Subtask 402.2.4, "Combat Resource Requirements", and presents the associated Data Flow Diagrams (DFDs) developed from the Structured Analysis and the corresponding procedures developed in the Structured Design. The portions of the Data Dictionary relating to the DFDs for this LSA Subtask includes the labels, names, descriptions, processes, data flows, data stores, and external entities. (The Data Dictionary is a "living document" that evolves through the analysis and design process). The Structured Design portion of this report develops the processes and data flows developed in the DFDs into procedures which are used to accomplish the LSA Tasks. The DFDs provide the method and the Design implements it, by formulating a guide for programmers to write software applications.

This report presents a brief overview of Structured Analysis and its place in the overall systems design process to assist the reader who may not be fully briefed on the symbols and conventions used. It is supported by Annex D, which defines each element in Structured Analysis.

LSA SUBTASK 402.2.4 DESCRIPTION

The "Combat Resource Requirements" analysis develops positive actions concerning the identification of combat requirements for a system and considers both onset and sustainment scenarios. Initially the analysis examines the system operational modes and the essential subsytems needed to meet operational requirments. Following identification of essential subsystems the resources required by that system at the onset of combat are determined along with the projected requirements to sustain the system during combat. The final results will contain a descriptions of the resource quantities required and the point at which they will be required during the combat scenario.

The LSA Task Description with associated task inputs and outputs is extracted from MIL-STD-1388-1A and is included as Annex A.

APPROACH

The APJ approach to Structured Analysis and Structure Design of an LSA Subtask is:

1. Scope the Subtask defined in MIL-STD-1388-1A with the overall task and determine its relationship with other LSA Tasks.

2. Review all pertinent documentation (e.g., AR's, MIL-STDs, etc.) applicable to the specific topic.

3. Prepare the Top Level DFDs in context of the Subtask, and develop lower level DFDs to further quantity any complex process identified in the top level DFD.

4. Complete the Data Dictionary portion of the Analysis by descripting all processes, data flows, data stores and external entities.

5. Apply staff experience in logistic support analysis to assure that the topic has been exhaustively addressed.

6. From the completed DFDs prepare the step by step procedures that form the structured design.

7. Review Data Item Description and other applicable material to develop output reports.

8. If required revise DFDs and Data Dictionary based on preparation of detailed procedures.

9. Validate results in discussions with Army activities and personnel directly involved in the applicable or related LSA tasks.

NOTE: Structured Analysis and preparation of Data Flow Diagrams (DFDs) was further assisted by the application of Structured Analysis software. Licensed by Index Technology Corporation, Excelerator provides for automated tracking of names, labels, descriptions, multiple levels of detail in the data flow diagrams, and industry standards in symbols and diagramming practices.

LSA SUBTASK 402.2.4 - COMBAT RESOURCE REQUIREMENT

The Data Flow Diagram is a tool that shows the flow of data, (i.e., data flows from sources) and is processed by activities to produce intermediate or final products.

The DFD provides a useful and meaningful partitioning of a system from the viewpoint of identification and separation of all functions, actions, or processes so that each can be introduced, changed, added, or deleted with minimal disruption of the overall program, i.e., it emphasizes the underlying concept of modularity and identifiable transformations of data into actionable products.

A series of three (3) DFDs have been developed to structure the LSA subtask relative to operations and other support functions:

1.	402.2.4	Top Level
2.	402.2.4.3A	System Combat Surviability
3.	402.2.4.4A	Combat Resource Requirement

Each DFD is keyed to the specific task through the identification number assigned in the lower right hand box. The Alpha codes indicate the level of indenture or explosion below the top level, i.e.,:

Top Level.....LSA DFD 402.2.4
First Indenture.....LSA DFD 402.2.4A

Each DFD makes reference to the basic LSA task it addresses, as well as the level of indenture (explosion) of the DFD. For example, the first or top level DFD, "402.2.4", refers to the section in MIL-STD-1388-1A which describes the review items. One of the processes (bubbles) on the top level diagram (402.2.4) is expanded and identified as "402.2.4A", a second level. (Alpha "A" indicates the second level).

Four standard symbols are used in the drawing of a DFD (see Annex D - Figure 1).

A copy of each DFD is presented in Annex B, accompanied by the Data Dictionary process elements. Each entry made in the DFDs has a corresponding entry in the Data Dictionary.

This presents only those Data Dictionary entries necessary for an understanding of the overall concept and a look at the supporting details of the structured analysis methodology. To facilitate review of the diagrams, data flows processes, and data store descriptions are provided.

VERT DIAGRAMS

The Venture Evaluation Review Technique (VERT) was developed as a network analysis technique to facilitate management decision making. It allows systematic planning and cotnrol of programs and enables managers to find solutions to real life mangerial problems. The VERT Diagrams and Batch Input Files for this task can be found in Annex D. In order to understand how these Input Files were developed, a brief discussion of the methodology used is provided. The same explanation is repeated verbatim in every report.

ANNEX A

LSA TASK 402
COMBAT RESOURCE REQUIREMENT

ANNEX A
LSA TASK 402
COMBAT RESOURCE REQUIREMENT 1/

402.1 PURPOSE. To determine the preferred support system alternative(s) for each system/equipment alternative and to participate in alternative system trade-offs to determine the best approach (support, design, and operation) which satisfies the need with the best balance between cost, schedule, performance, readiness, and supportability.

402.2 TASK DESCRIPTION

402.2.4 Conduct evaluations and trade-offs between system/equipment alternatives and survivability and battle damage repair characteristics in a combat environment.

1/ Abstracted verbatim from MIL-STD-1388-1A, April 11, 1983, Pages 36-37.

ANNEX B

LSA SUBTASK 402.2.4
DATA FLOW DIAGRAMS & DATA FLOW DICTIONARY

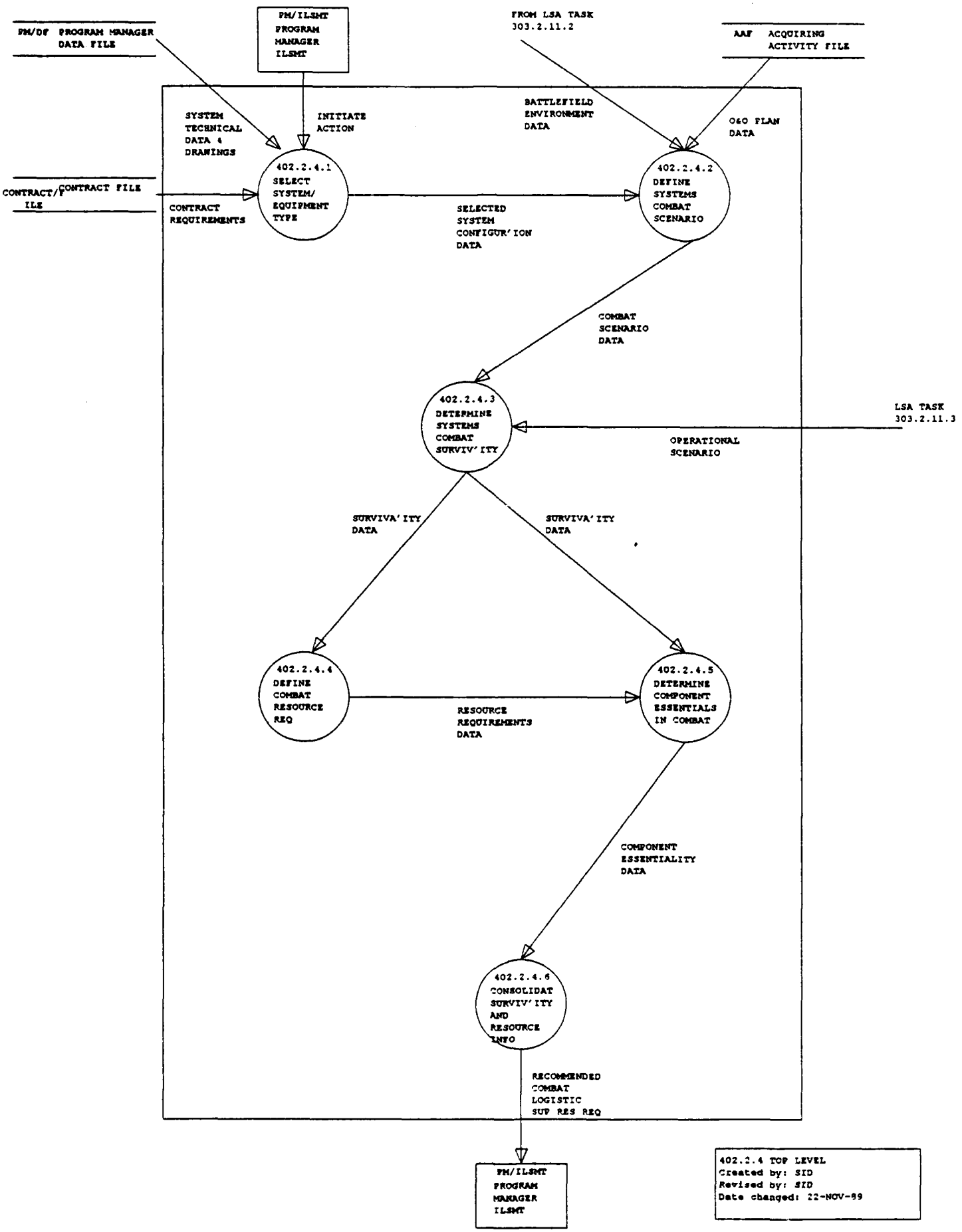
PM/DF PROGRAM MANAGER DATA FILE
PM/ILSMT PROGRAM MANAGER ILSMT
FROM LSA TASK 303.2.11.2
AAF ACQUIRING ACTIVITY FILE
SYSTEM TECHNICAL DATA & DRAWINGS
INITIATE ACTION
BATTLEFIELD ENVIRONMENT DATA
O&O PLAN DATA
CONTRACT/P CONTRACT FILE ILE
402.2.4.1 SELECT SYSTEM/ EQUIPMENT TYPE
402.2.4.2 DEFINE SYSTEMS COMBAT SCENARIO
CONTRACT REQUIREMENTS
SELECTED SYSTEM CONFIGUR'ION DATA
COMBAT SCENARIO DATA
402.2.4.3 DETERMINE SYSTEMS COMBAT SURVIV'ITY
LSA TASK 303.2.11.3
OPERATIONAL SCENARIO
SURVIVA'ITY DATA
SURVIVA'ITY DATA
402.2.4.4 DEFINE COMBAT RESOURCE REQ
402.2.4.5 DETERMINE COMPONENT ESSENTIALS IN COMBAT
RESOURCE REQUIREMENTS DATA
COMPONENT ESSENTIALITY DATA
402.2.4.6 CONSOLIDAT SURVIV'ITY AND RESOURCE INFO
RECOMMENDED COMBAT LOGISTIC SUP RES REQ
PM/ILSMT PROGRAM MANAGER ILSMT
402.2.4 TOP LEVEL
Created by: SID
Revised by: SID
Date changed: 22-NOV-89

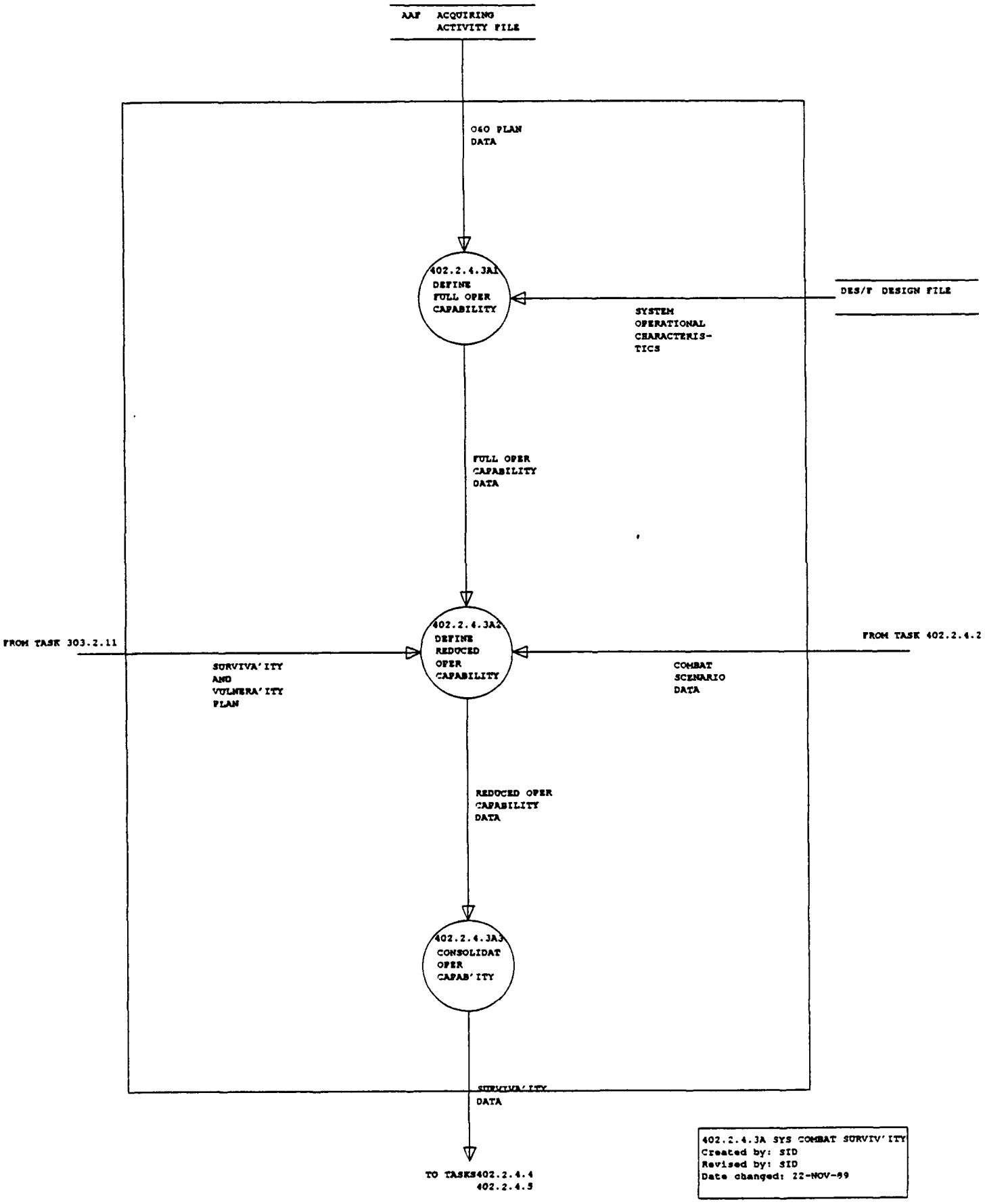
AAF ACQUIRING ACTIVITY FILE
O&O PLAN DATA
402.2.4.3A1 DEFINE FULL OPER CAPABILITY
DES/F DESIGN FILE
SYSTEM OPERATIONAL CHARACTERIS-TICS
FULL OPER CAPABILITY DATA
402.2.4.3A2 DEFINE REDUCED OPER CAPABILITY
FROM TASK 303.2.11
SURVIVA'ITY AND VULNERA'ITY PLAN
FROM TASK 402.2.4.2
COMBAT SCENARIO DATA
REDUCED OPER CAPABILITY DATA
402.2.4.3A3 CONSOLIDAT OPER CAPAB'ITY
DATA
TO TASKS402.2.4.4
402.2.4.5
402.2.4.3A SYS COMBAT SURVIV'ITY
Created by: SID
Revised by: SID
Date changed: 22-NOV-89

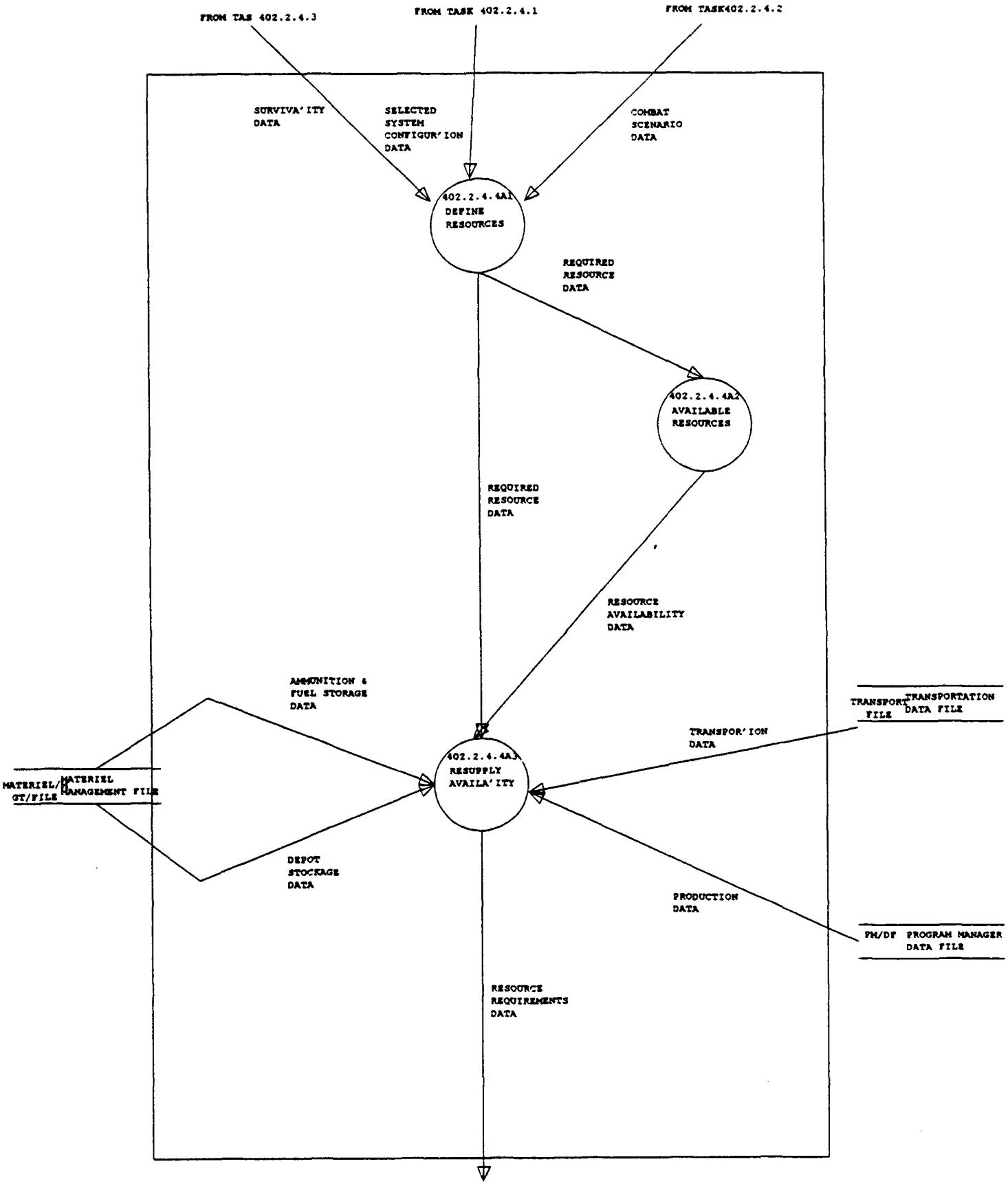

402.2.4.4A COMBAT RESOURCE REQ
Created by: SID
Revised by: SID
Date changed: 22-NOV-89

Name	Label	Description
402.2.4.1	SELECT SYSTEM/ EQUIPMENT TYPE	TO SELECT THE SYSTEM EQUIPMENT THAT WILL BE ANALYZED DURING THIS PROCESS.
402.2.4.2	DEFINE SYSTEMS COMBAT SCENARIO	TO DEFINE THE COMBAT SCENARIO IN WHICH THE SYSTEM MUST FUNCTION AS DESCRIBED IN THE O&O PLAN, OR FROM PROCESS 303.2.11.2 (DFEINE BATTLEFIELD ENVIRONMENT) IF, THAT PROCESS WAS ACCOMPLISHED FOR THIS SYSTEM.
402.2.4.3	DETERMINE SYSTEMS COMBAT SURVIV'ITY	THIS PROCESS WILL DETERMINE THE COMBAT SURVIVABILITY OF THE SYSTEM. A DETAILED STEP BY STEP DESCRIPTION OF THIS PROCESS WILL BE CONTAINED IN THE FOLLOWING SUBPROCESSES.
402.2.4.3A1	DEFINE FULL OPER CAPABILITY	TO DEFINE THE FULL OPERATIONAL CAPABILITY OF THE SYSTEM AS INDICATED IN THE O&O PLAN.
402.2.4.3A2	DEFINE REDUCED OPER CAPABILITY	TO DETERMINE TO WHAT DEGREE THE OPERATIONAL EFFICIENCY OF THE SYSTEM CAN BE REDUCED, AND WHAT ITS EFFECT WILL BE ON THE MISSION.
402.2.4.3A3	CONSOLIDAT OPER CAPAB'ITY	TO CONSOLIDATE ALL THE DATA DEVELOPED IN PROCESSES 402.2.4.3A1 AND 402.2.4.3A2.
402.2.4.4	DEFINE COMBAT RESOURCE REQ	THIS PROCESS WILL DEFINE THE COMBAT RESOURCE REQUIREMENTS FOR THE SYSTEM BEING EVALUATED. A DETAILED STEP BY STEP DESCRIPTIN OF THIS PROCESS IS CONTAINED IN THE SUBPROCESSES
402.2.4.4A1	DEFINE RESOURCES	THE USER MUST DEVELOP A COMPLETE LISTING OF THE COMBAT RESOURCES REQUIRED BY THE SYSTEM, AS DEFINED BY ITS COMBAT SCENARIO.
402.2.4.4A2	AVAILABLE RESOURCES	TO PROVIDE DATA ON THE AVAILABILITY AND LOCATION OF THE REQUIRED RESOURCES AT THE ONSET OF COMBAT.
402.2.4.4A3	RESUPPLY AVAILA'ITY	THIS PROCESS MUST DETERMINE TO WHAT EXTENT THE USER CAN EXPECT THE SUPPLY SYSTEM TO PROVIDE THE REQUIRED RESOURCES AT THE ONSET OF COMBAT, AND TO WHAT DEGREE IT CAN BE EXPECTED TO CONTINUE.
402.2.4.5	DETERMINE COMPONENT ESSENTIALS IN COMBAT	TO DETERMINE WHICH OF THE COMPONENTS LISTED IN THE RESOURCE REQUIREMENTS DATA ARE MOST ESSENTIAL TO THE OPERATION OF THE SYSTEM AND THE ACCOMPLISHMENT OF THE MISSION.

	Name	Label	Description
	402.2.4.6	CONSOLIDAT SURVIV'ITY AND RESOURCE INFO	TO CONSOLIDATE THE SURVIVABILITY AND RESOURCES DATA INTO A SINGLE DOCUMENT, THAT CAN BE USED TO DETERMINE THE RESOURCE REQUIREMENTS OF THE SYSTEM TO INSURE ITS OPERATIONAL EFFECTIVENESS DURING ITS COMBAT SCENARIO.

Name	Label	Description
AMMO/FUEL/DATA	AMMUNITION & FUEL STORAGE DATA	THIS DATA FLOW CONTAINS INFORMATION REGARDING STORAGE LOCATIONS OF AMMUNITION AND FUEL IN THE DEPOT TO MAINTAIN A CONTINUOUS SUPPLY OF THE MATERIELS DURING COMBAT.
BATFLD/ENV/DATA	BATTLEFIELD ENVIRONMENT DATA	ACRONYMS: O&O PLAN - OPERATIONAL AND ORGANIZATIONAL PLAN. PURPOSE OF DATA: PROVIDE THE ANALYST WITH A SUMMARY OF THE BATTLEFIELD ENVIRONMENT IN WHICH THE SYSTEM MUST FUNCTION. ALSO SUGGEST IMPROVEMENTS OR CHANGES TO THE O&O PLAN. SOURCE OF DATA: DEVELOPED FROM THE O&O PLAN USING PROCESS 303.2.11.2
COMBAT/SCEN/DATA	COMBAT SCENARIO DATA	ACRONYMS: OPERATIONAL AND ORGANIZATIONAL PLAN. PURPOSE OF DATA: PROVIDE A DESCRIPTION OF THE COMBAT SCENARIO AS INDICATED IN THE O&O PLAN. SOURCE OF DATA: SECTION III OF THE O&O PLAN CONTAINS THIS DATA.
COMP/ESS	COMPONENT ESSENTIALITY DATA	ACRONYMS: NONE. PURPOSE OF DATA: TO PROVIDE A LISTING OF THE COMPONENTS MOST CRITICAL TO THE OPERATION OF THE SYSTEM IN COMBAT. SOURCE OF DATA: DETERMINED IN PROCESS 402.2.4.5
CONTRACT/REQ	CONTRACT REQUIREMENTS	ACRONYMS: RFP REQUEST FOR PROPOSAL SOW STATEMENT OF WORK PURPOSE OF DATA: PROVIDE THE ANALYST WITH THE DETAILS OF THE CONTRACT REQUIREMENTS FOR THE SYSTEM OR THE DESIGN BEING EVALUATED. SOURCE OF DATA: CONTRACT FILE PROCURING AND ENGINEERING ACTIVITIES (RFP. AND SOW)
DEP/STOCKAGE/DATA	DEPOT STOCKAGE DATA	ACRONYMS: POL PETROLEUM, OIL AND LUBRICANTS. WWARS WORLDWIDE AMMUNITION REPORTING SYSTEM. THIS DATA FLOW CONTAINS THE LATEST STOCKAGE POSITION OF POL AND AMMUNITION AT THE DEPOT LEVEL. SOURCE OF DATA: WARS REPORT FOR AMMUNITION. POL MATERIEL MANAGEMENT FILE.
INIT/ACT	INITIATE ACTION	ACRONYMS: ILSMT - INTEGRATED LOGISTIC SUPPORT MANAGEMENT TEAM. PURPOSE OF DATA: PROVIDE THE AUTHORIZATION AND FUNDING TO CONDUCT A BATTLEFIELD DAMAGE ASSESSMENT AND REPAIR ANALYSES, AS REQUIRED BY MIL-STD 1388. SOURCE OF DATA: PROJECT MANAGEMENT OFFICE OR THE ILSMT. (1095 FORM).

Name	Label	Description
O&O/PLAN/DATA	O&O PLAN DATA	ACRONYMS: O&O PLAN - OPERATIONAL AND ORGANIZATIONAL PLAN. PURPOSE OF DATA: THE O&O PLAN CONTAINS INFORMATION ON THE TYPE, SIZE, AND QUANTITY OF ENEMY SYSTEMS, THE OPERATIONAL SCENARIO, MISSION DURATION, MISSION FREQUENCY, MISSION PROFILE. ALSO THE MOBILITY REQUIREMENTS AND OTHER INFORMATION REQUIRED TO DEFINE THE BATTLEFIELD ENVIRONMENT IN PROCESS 402.2.4.2 SOURCE OF DATA: THE PROGRAM MANAGEMENT OR THE PROCUREMENT OFFICE.
OPER/CAPA/DATA	FULL OPER CAPABILITY DATA	THIS DATAFLOW CONTAINS THE FULL OPERATIONAL CAPABILITY OF THE SYSTEM AS INDICATED IN THE O&O PLAN.
OPER/SCEN	OPERATIONAL SCENARIO	ACRONYMS: NONE. PURPOSE OF DATA: THIS DATA FLOW WILL DESCRIBE THE THREAT TO BE COUNTERED, IN REGARD ITS CURRENT AND PROJECTED CAPABILITY. IT WILL CONTAIN THE VULNERABILITY AND OPERATIONAL EFFECTIVENESS OF THE PROPOSED SYSTEM. IT SHALL ALSO, DESCRIBE IN BROAD BANDS THE MAIN OPERATIONAL CHARACTERISTICS OF THE PROPOSED SYSTEM. SOURCE OF DATA: PROGRAM PROCUREMENT AND ENGINEERING OFFICE. (O&O PLAN)
PROD/DATA	PRODUCTION DATA	THIS DATA FLOW CONTAINS SCHEDULES FOR PRODUCTION AND AVAILABILITY OF MATERIEL TO REPAIR AND OPERATE THE END ITEM DURING COMBAT. SOURCE OF DATA: DETERMINED IN PROCESS 402.2.4.6
REC/COM/LOG/SUPP/REQ	RECOMMENDED COMBAT LOGISTIC SUP RES REQ DATA	THIS DATAFLOW CONTAINS DATA TO DETERMINE THE MOST EFFECTIVE METHODS OF PROVIDING THE SYSTEM, WITH THE RESOURCES REQUIRED TO MEET ITS FULL COMBAT OPERATIONAL CAPABILITY.
RED/OPER/CAPA/DATA	REDUCED OPER CAPABILITY DATA	ACRONYMS: NONE. PURPOSE OF DATA: THIS DATA FLOW CONTAINS INFORMATION PERTAINING TO THE DEGREE TO WHICH THE OPERATIONAL EFFECTIVENESS OF THE SYSTEM CAN BE REDUCED IN THE COMBAT ENVIRONMENT, AND WHAT ITS EFFECT WILL BE ON THE MISSION. SOURCE OF DATA: DETERMINED IN PROCESS 402.2.4.3A

Name	Label	Description
REQ/RSE/DATA	REQUIRED RESOURCE DATA	THIS DATA FLOW CONTAINS A LISTING OF THE TYPES AND QUANTITIES OF RESOURCES REQUIRED TO KEEP THE SYSTEM OPERATIONAL DURING ITS COMBAT MISSION. THE LISTING INCLUDES BUT IS NOT LIMITED TO ANY OF THE FOLLOWING: A. SPARE AND REPAIR PARTS. B. FUEL. C. OILS, LUBRICANTS, AND OTHER FLUIDS. D. ADAPTIVE KITS. E. AMMUNITION F. REPLACEMENT MODULES G. SPECIAL TOOLS AND EQUIPMENT H. MAINTENANCE AND REPAIR MANUALS. SOURCE OF DATA: DETERMINED IN PROCESS 402.2.4.4A1
RES/AVAIL/DATA	RESOURCE AVAILABILITY DATA	THIS DATA FLOW CONTAINS INFORMATION ON THE AVAILABILITY AND LOCATION OF THE REQUIRED RESOURCES AT THE ONSET OF COMBAT. SOURCE OF DATA: DETERMINED IN PROCESS 402.2.4.4A3
RES/REQ/DATA	RESOURCE REQUIREMENTS DATA	THIS DATA FLOW DEFINES THE COMBAT RESOURCE REQUIREMENTS FOR THE SYSTEM BEING EVALUATED.
SEL/SYS/CONFIG/DATA	SELECTED SYSTEM CONFIGUR'ION DATA	ACRONYMS: NONE. PURPOSE OF DATA: PROVIDE THE ANALYST WITH A DESCRIPTION OF THE SYSTEM., DESIGN OR EQUIPMENT THAT THE PROGRAM MANAGEMENT OFFICE, HAS REQUESTED TO BE ANALYZED UNDER TASK 404 FOR COMBAT LOGISTIC SUPPORT REQUIREMENTS. SOURCE OF DATA: PROCESS 402.2.4.1 (SELECT SYSTEM/EQUIPMENT TYPE).
SUR/VUN/DATA	SURVIVA'ITY AND VULNERA'ITY PLAN	ACRONYMS: NONE PURPOSE OF DATA: PROVIDE DATA ON THE PROJECTED VULNERABILITY AND SURVIVABILITY OF THE SYSTEM/DESIGN THAT WILL BE REQUIRED DURING THE ACCOMPLISHMENT OF PROCESS 402.2.4.3A2 SOURCE OF DATA: PROGRAM PROCUREMENT AND ENGINEERING OFFICE. (PROCESS 303.2.11)
SURV/DATA	SURVIVA'ITY DATA	PURPOSE OF DATA: PROVIDE THE ANALYST WITH A DESCRIPTION OF THE TYPE OF DAMAGE THE SYSTEMS COULD ENCOUNTER ON THE BATTLEFIELD AND THE EXTENT OF THE DEGRADATION TO THE OPERATION OF THE SYSTEM. SOURCE OF DATA: THIS DATA WAS DEVELOPED IN PROCESS 402.2.4.3
SYS/OPS/CHAR	SYSTEM OPERATIONAL CHARACTERIS-TICS	THIS DATA FLOW CONTAINS THE QUANTITATIVE OPERATIONAL CHARACTERISTICS OF THE SYSTEM/SUBSYSTEM/COMPONENTS WHEN PERFORMING WITHIN SPECIFICATION. QUANTITATIVE CHARACTERISTICS SUCH AS FUNCTIONS PERFORMED BY THE SUBSYSTEMS AND COMPONENTS ARE ALSO INCLUDED. SOURCE OF DATA: DESIGN FILE

Name	Label	Description
SYS/TECH/DATA/DRAW	SYSTEM TECHNICAL DATA & DRAWINGS	ACRONYMS: NONE. PURPOSE: PROVIDE COPIES OF LATEST TECHNICAL DATA AS INDICATED IN THE PROGRAM AND CONTRACT REQUIREMENTS DOCUMENTS, AND A COMPLETE SET OF CURRENT DRAWINGS FOR THE DESIGN/SYSTEM TO BE EVALUATED. SOURCE OF DATA: PROGRAM MANAGER OR ENGINEERING OFFICE.
TPT/DATA	TRANSPOR'ION DATA	THIS DATA FLOW CONTAINS INFORMATION ON RESUPPLY ACTIVITIES DURING COMBAT. DATA ON HOW, WHEN AND WHERE MATERIEL WILL BE SUPPLIED TO SUPPORT THE END ITEM DURING COMBAT. SOURCE OF DATA: TRANSPORTATION DATA FILE.

Name	Label	Description
AAF	ACQUIRING ACTIVITY FILE	Contains those records, documents, decision papers, schedules that were prepared as part of the acquisition initiation, justification, and planning prior to the assignment of a program manager. The items in this data store include: A. THREAT ANALYSIS DATA B. O&O PLAN C. READINESS OBJECTIVES DATA D. FUNCTIONAL REQUIREMENTS DATA E. PROJECTED SCHEDULE DATA F. LOGISTICS RESOURCES DATA G. DESIRED R & M PARAMETERS H. TOA I. TOD J. COST & OPERATIONAL EFFECTIVENESS ANALYSIS(COEA) DATA K. PROJECTED COST DATA L. JUSTIFICATION OF MAJOR SYSTEM NEW START (JMSNS) DATA M. REQUIRED OPERATIONAL CHARACTERISTICS
CONTRACT/FILE	CONTRACT FILE	PURPOSE: THIS IS A REPOSITORY OF ANY CONTRACTUAL DOCUMENTS AFFECTING THE PROJECT. THIS FILE MAY BE CALLED UPON TO VERIFY WHAT THE CONTRACTOR HAS BEEN TASKED TO DO AND HOW WELL HE HAS DONE IT. SOURCE OF DATA: APPROVED OR UNAPPROVED RFP'S, IFB'S, ANY CHANGES, PROGRESS REPORTS, ETC.
DES/F	DESIGN FILE	PURPOSE OF DATA STORE: THIS STORE CONTAINS DESIGN INFORMATION WHICH WILL AID IN ASSESSING S&I INTERFACES TO INCLUDE RSI. SOURCE OF DATA: CONTRACT DELIVERABLES, DESIGN REVIEW MINUTES, DRAWINGS, SPECS, WORKING GROUP OBSERVATIONS/COMMENTS.
MATERIEL/MGT/FI	MATERIEL MANAGEMENT FILE	THIS DATA STORE CONTAINS INFORMATION PERTAINING TO THE LATEST STOCKAGE LEVELS, PROVISIONING REQUIREMENTS, STORAGE INFORMATION/LOCATIONS OF THE FOLLOWING ITEMS: 1. SPARE AND REPAIR PARTS. 2. FUEL/REPAIR PARTS. 3. OILS,LUBRICANTS, AND OTHER FLUIDS. 4. ADAPTATION KITS. 5. AMMUNITION. 6. REPLACEMENT MODULES. 7. SPECIAL TOOLS AND EQUIPMENT. 8. MAINTENANCE AND REPAIR MANUALS. 9. WORLDWIDE AMMUNITION REPORT SYSTEM.

	Name	Label	Description
	PM/DF	PROGRAM MANAGER DATA FILE	CONTAINS THOSE FILES AND DATA WHICH ARE NORMALLY DEVELOPED BY AND/OR RETAINED BY THE PROGRAM MANAGER FOR PROPER MANAGEMENT OF THE DEVELOPMENT PROGRAM. THESE FILES INCLUDE: 1. ENGINEERING DRAWINGS 2. ENGINEERING CHARACTERISTICS 3. DT/OT RESULTS 4. CONCEPT FORMULATION PACKAGE (CFP) 5. DESIGN CONCEPT PAPER (DCP) 6. TYPE TECHNICAL REVIEWS REQUIRED 7. MILESTONE SCHEDULES 8. FUNDING PROFILES 9. REQUIRED OPERATIONAL CAPABILITIES (ROC) 10. ITEM/EQUIPMENT SPECIFICATIONS 11. ITEM/EQUIPMENT MISSIONS & FUNCTIONS 12. EQUIPMENT, MANPOWER, AND TECHNICAL RISK ASSESSMENTS (FROM LSA TASK 301.2.3 13. TRADE OFF DETERMINATION ANALYSIS (TOD) 14. TRADE OFF ANALYSIS (TOA) 15.BEST TECHNICAL APPROACH ANALYSIS (BTA) 16. COST AND OPERATIONAL-EFFECTIVENESS ANALYSIS (COEA)
	TRANSPORT FILE	TRANSPORTATION DATA FILE	PURPOSE: CONTAINS THOSE FILES AND DATA WHICH ARE NORMALLY DEVELOPED DURING ANALYSIS OF THE SYSTEM FOR TRANSPORTABILITY FACTORS. THESE FILES INCLUDE: 1. TRANSPORTATION PLAN. 2. TRANSPORTATION EVALUATION PLAN REPORT.

	Name	Label	Description
	PM/ILSMT	PROGRAM MANAGER ILSMT	THE PROGRAM MANAGER OR THOSE ACTIVITIES, AGENCIES, OR AUTHORITIES THAT ARE RESPONSIBLE FOR THE INITIATION OF THE REQUIREMENT FOR AN ILS ELEMENT ASSESSMENT DURING A DEVELOPMENT PROGRAM FOR A SYSTEM AND/OR EQUIPMENT IN ACCORDANCE WITH AR 700-127. THE KEY ACTION (OUTPUT) REQUIRED OF THIS EXTERNAL ENTITY IS THE DIRECTIVE AUTHORITY, OR OTHER DOCUMENTATION THAT INITIATES THE REQUIREMENT FOR THE APPLICATION OF THIS ILS ASSESSMENT TO A SPECIFIC SYSTEM/EQUIPMENT DEVELOPMENT PROGRAM AT A SPECIFIED POINT IN ITS LIFE CYCLE.

ANNEX C

LSA SUBTASK 402.2.4
STRUCTURED DESIGN

PROCESS 402.2.4.1
SELECT SYSTEM/EQUIPMENT TYPE

PROCESS: 402.2.4.1 - SELECT SYSTEM/EQUIPMENT TYPE

OBJECTIVE:

To select the system/equipment that will be analyzed during this process.

PROCEDURE:

1. Obtain a copy of the system/equipment Work Breakdown Structure (WBS), prepared in accordance with MIL-STD 881, and identify the subsystem/component that will be analyzed.

2. Obtain a copy of the systems drawings and contract requirements from the program office.

If a specific WBS is not available, the system/equipment types might be considered to fall into any of the following types/categories:

1. Calibration Systems
2. Servicing Facilities
3. Power Plant Systems
4. Fuel Systems
5. Electrical Systems
6. Hydraulic/Pneumatic Systems
7. Drive System
8. Transmission Systems
9. Track/Suspension Systems
10. Guidance/Control Systems
11. Firepower
    a. Armament Systems
    b. Fire Control Systems
    c. Weapons Delivery Systems
12. Communications/Control Systems
13. Electronics/Computer System
14. Human Accommodations

3. Document the system, subsystems, and components to be analyzed in the format provided.

SOURCE OF DATA:

The data required to accomplish this process is available from the LSA data and the WBS both of which are available from the Project Management Office and the ILSMT.

Select System/Equipment Type Chart
(Process 402.2.4.1)

End Item Name:
Nomenclature:
Part Number:

1. Select System/Equipment Type

TYPE	Y/N	TYPE	Y/N
Calibration Systems		Guidance/Control Systems	
Servicing Facilities		Firepower	
Power Plant Systems		a. Arament Systems	
Fuel Systems		b. Fire Control Systems	
Electrical Systems		c. Weapons Delivery Systems	
Hydraulic/Pneumatic Systems		Communications/Control System	
Drive Systems		Electronics/Computer Systems	
Transmission Systems		Human Accomodations	
Track/Suspension Systems			

2. Select items for resource evaluation analyses and provide the following information for each.

System Subsystem Component	Selection Criteria	Failure Rate

PROCESS: 402.2.4.2 - DEFINE SYSTEM COMBAT SCENARIO

OBJECTIVE:

To define the combat scenario in which the system must function as described in the O&O Plan, or from Process 303.2.11.2 (Define Battlefield Environment) if, that Process was accomplished for this system.

PROCEDURE:

1. The analyst must first determine if LSA Subtask 303.2.11 was accomplished using APJ report 966-230. If LSA Task 303.2.11 obtain a copy of the results for Process 303.2.11.2 (Define Battlefield Environment), it will contain all the information required to complete this process. However, prior to use the data should be reviewed and updated.

2. If process 303.2.11.2 was never completed the analyst should obtain a copy of APJ report 966-230 dated September 1989 and follow the procedures developed to accomplish this process.

3. The instructions for process 303.2.11.2 in conjunction with the O&O Plan and the threat data for this system, will provide all the methods and information required to complete this process. The output data will be titled, "Combat Scenario Data".

SOURCE OF DATA:

The O&O Plan, Threat Data or the results of Process 303.2.11.2 (from APJ report 966-239) can be provided by the Project Management or the Maintenance Engineering Offices for the system.

PROCESS: 402.2.4.3 - DETERMINE SYSTEMS COMBAT SURVIVABILITY

OBJECTIVE:

This process will determine the combat survivability of the system. A detailed step by step description of this process will be contained in the following subprocesses.

PROCESS: 402.2.4.3A1 - DEFINE FULL OPERATIONAL CAPABILITY

OBJECTIVE:

To define the full operational capability of the system as indicated in the O&O Plan.

PROCEDURE:

1. The analyst must review the O&O Plan that was developed for this system, and determine the full operational capability as indicated in that plan. However, if Structured Design Process 303.2.11.2A2 (Define Operational Scenario), from APJ Report 966-230 was accomplished for this system, those results combined with the results of Process 402.2.4.2 should be sufficient to accomplish this process. If the data is available it should be reviewed and updated as required to assure that the latest information is included.

2. In the event that Process 303.2.11.2A2 was never accomplished for this system, the analysts must obtain a copy of APJ report 966-230 and perform Process 303.2.11.2 using the O&O Plan developed for the system. The O&O Plan will provide the data, and the instructions for Process 303.2.11.2A2 will provide the methods to accomplish this process.

3. After having developed the above data for each item, component and system within the overall system mission requirements, develop a listing indicating the full operational capability of each item.

SOURCE OF DATA:

The O&O Plan developed for the system, or the results of Process 303.2.11.2A2. This information will be available from the Project or ILS Manager for the system.

PROCESS 402.2.4.3
DETERMINE SYSTEMS COMBAT SURVIVABILITY

PROCESS: 402.2.4.3A2 - DEFINE REDUCED OPERATIONAL CAPABILITY

OBJECTIVE:

To determine to what degree the operational efficiency of the system can be reduced, and what its effect will be on the mission.

PROCEDURE:

1. To accomplish this task the analyst must review the data from Process 402.2.4.3A1 (Define Full Operational Capability) and Process 402.2.4.2 (Define System Combat Scenario) and define the capabilities of the system to perform its mission in a degraded mode of operation. to what degree the operation of the system can be reduced and how each level of reduction will effect the operational capability of the system.

2. The data from Process 402.2.4.3A1 provides the analyst with a good description of the full system operational capability. Using the configuration data and the Combat Scenario Data, from Process 402.2.4.2, the analyst must systematically remove functional subsystems and components supporting each mode of system operation (e.g. move, shoot, etc.) and determine the impact on the mission capability (e.g. can't perform indirect fire support). Subsystem and components should be removed until the system can no longer perform its intended function (e.g. fire control telescope, mechanism to control gun, the gun tube). A record should be maintained that will provide data on each reduction in mission capability and its overall impact on the system.

3. For each reduced or degraded system function identify what missions the system is capable of performing.

NOTE: The output data from this process is, Reduced Operational Capability information.

SOURCE OF DATA:

The source of the data input is the results of Process 402.2.4.3A1 (Defined Full Operational Capability), Configuration Data from Process 402.2.4.1. and the Combat Scenario from Process 402.2.4.2.

PROCESS 402.2.4.3
DETERMINE SYSTEMS COMBAT SURVIVABILITY

PROCESS: 402.2.4.3A3 - CONSOLIDATE OPERATIONAL CAPABILITY

OBJECTIVE:

To consolidate all the data developed in Processes 403.2.4.3A1 and 403.2.4.3A2.

PROCEDURE:

1. To accomplish this process the analyst must review all the data developed in Processes 402.2.4.3A1 and 402.2.4.3A2 and prepare a chart indicating all operational capabilities of the system.

2. For each subsystem or component the chart must identify the extent of degradation introduced into the system and indicate it will impact the operational capability of the system. Using the O & O plan, identify the aspect of the mission the can not be accomplished during the degragated mode. Quantitatively specify the parameters which have been lost (e.g. capability to accurately measure the direction and range of a potential target: 5000 yds +/- 5 yds).

NOTE: This process will provide the analyst with the data needed to accomplish process 402.2.4.4 which defines the resource requirements of the system at various levels of mission capability. In addition this process provides the information required to accomplish process 402.2.4.5 which determines the essentiality of various system components in combat.

SOURCE OF DATA:

The results of Processes 404.2.4.3A1 and 402.2.4.3A2

Systems Combat Survivability Chart
(Process 402.2.4.3)

End Item Name:
Nomenclature:
Part Number:

From the information provided from Processes 402.2.4.3A1 and 402.2.4.3A2 enter the data as follows:

Item	Full Operational Capability	Extent of Degraded Operation	Degraded Operation	Required Resources	
				Full Operation	Reduced Operation

PROCESS 402.2.4.4
DEFINE SYSTEMS COMBAT RESOURCES REQUIREMENTS

PROCESS: 402.2.4.4 - DEFINE COMBAT RESOURCE REQUIREMENTS

OBJECTIVE:

This process will define the combat resource requirements for the system being evaluated. A detailed step by step description of this process is contained in the following subprocesses.

PROCESS: 402.2.4.4A1 - DEFINE RESOURCES

OBJECTIVE:

The user must develop a complete listing of the combat resources required by the system, as defined by its combat scenario.

PROCEDURE:

1. From the results of Process 402.2.4.3, develop a list of the combat resources required to support the system within its combat scenario.

2. The results of Process 402.2.4.3 is a listing of the components and systems, that could be effected by the various battlefield conditions and enemy threats that the system could encounter. It also indicates the potential extent of damage that each component/system could expect to receive.

3. From this data, the analyst can identify the types and quantities of resources required to keep the system operational during its combat mission. This listing includes but is not limited to any of the following:

A. Spare and Repair Parts
B. Fuel
C. Oils, Lubricants and Other Fluids
D. Adaptation Kits
E. Ammunition
F. Replacement Modules
G. Special Tools and Equipment
H. Maintenance and Repair Manuals

SOURCE OF DATA:

The results of Process 402.2.4.3 Survivability Data which will also contain the results of Process 402.2.4.2 Combat Scenario Data and Process 402.2.4.1 Configuration Data.

Combat Resource Requirements Chart
(Process 402.2.4.4A1)

End Item Name: Nomenclature: Part Number:

1. Select Type of Resource

TYPE	Y/N
Spare and Repair Parts	
Fuel	
Oils, Lubricants and Other Fluids	
Adaptation Kits	
Ammunition	
Replaceable Modules	
Special Tools and Equipment	
Maintenance and Repair Manuals	

2. Select Items, Indicate Extent of Damage, Quantities and locations.

Component System Subsystem	Extent of Damage	Quantity Required	Quantity Available at On-Set	Storage Location	Essentiality in Combat

PROCESS 402.2.4.4
DEFINE SYSTEMS COMBAT RESOURCES REQUIREMENTS

PROCESS: 402.2.4.4A2 - AVAILABLE RESOURCES

OBJECTIVE:

To provide data on the availability and location of the required resources at the onset of combat.

PROCEDURE:

1. The results of Process 402.2.4.4A1 developed a listing of all the resources required to support the system in its combat scenario. However, some of the items may not be available in the quantities required or maintenance levels specified. This process must now provide information on the actual quantities and locations of the available resources at the onset of combat.

2. Reviewing the ASL/PLL and any other provisioning documentation for the system. Using this information determine the quantity and level of maintenance at which each of the resources can be located.

3. Incorporate this information into the listing developed in process 404.2.4.4A1. Insert the quantities that are expected to be stored at a particular location in the column headed "AVAILABLE AT ONSET" and the level of maintenance at which the quantities are stored in the column headed "LOCATION".

SOURCE OF DATA:

Process 402.2.4.4A1 will provide the general data required to accomplish this process, but most of the data required to determine the locations and quantities of resources, must be extracted from supply data such as the ASL/PLL, and any other available provisioning documents for the system.

PROCESS 402.2.4.4
DEFINE SYSTEMS COMBAT RESOURCE REQUIREMENTS

PROCESS: 402.2.4.4A3 - RESUPPLY AVAILABILITY

OBJECTIVE:

This process must determine to what extent the user can expect the supply system to provide the required resources at the on-set of combat, and to what degree it can be expected to continue.

PROCEDURE:

1. Determine, using the list of the required and available resources that was developed in Process 402.2.4.4A1, the expected range and quantity of material that the supply system will have available and provide while the system is operating in the field. Also indicate when this material is expected in the field.

2. Gather information on the quantities and locations (i.e maintenance) for each material item required to support the system that can not currently be obtained by the unit in the field. In cases where the material is not available in the desired quantities to the unit, a schedule for supplying those items must be determined. From the system item manager obtain a list of the total item quantities being procured and the location where these items will be stored.The item manager can also provide information on the production status and a schedule indicating the expected time in which the items will be available.

3. Obtain a copy of the Combat Transportation plan which contain information related to resupply operations during combat. Develop a list indicating the item, its storage location, the total quantity stored, and the projected resupply time as determined in the transportation plan to fill the supply pipe line into the combat area. Include the data on the production status of the item.

SOURCE OF DATA:

This data will be available from the results from Process 402.2.4.4A1 and the item manager within the command that is responsible for the system.

Resupply Availability Chart
(Process 404.2.4.4A3)

End Item:
Nomenclature:
Part Number:

From the information developed in Process 404.2.4.4A3 complete the following.

Item	Total Quantities	Storage Locations	Transportation Time Required to Resupply Field Units	Production Status

PROCESS: 402.2.4.5 - DETERMINE COMPONENT ESSENTIALITY IN COMBAT

OBJECTIVE:

To determine which of the components listed in the resource requirements data are most essential to the operation of the system and the accomplishment of the mission.

PROCEDURE:

1. In order to accomplish this process the analyst in cooperation with the program engineers and the ILSMT should review the data developed in Process 402.2.4.4.4A1 (Required Resource Data), 402.2.4.4.3 (Survivability Data) and 402.2.4.2 (Combat Scenario Data) and determine the essentiality of each item based on accomplishing the intended mission as indicated in the O&O Plan.

2. Assign rating such as those used in the FMECA and RCM analysis, in accordance with AMC-P-750-2 and MIL-STD 1629, to each item and recorded on the Form developed in Process 402.2.4.4A1 in the column headed "Essentiality in Combat".

The rating system used should contain the following:

CATASTROPHIC	-	Loss of Life
	-	Loss of System
	-	Mission Abort
CRITICAL	-	System Hazard
	-	Degraded Operation
MAJOR	-	Minor Effect on Safety or Mission
MINOR	-	No Effect on Mission

PROCESS: 402.2.4.6 - CONSOLIDATE SURVIVABILITY AND RESOURCE INFORMATION

OBJECTIVE:

To consolidate the survivability and resource data into a single document, that can then be used to determine the resource requirements of the system to insure its operational effectiveness during its combat scenario.

PROCEDURE:

1. Assemble all the data developed in Processes 402.2.4.3, 402.2.4.4 and 402.2.4.5 and consolidate it into a single document. The data is used in the decision making process to determine the most effective methods of providing the system, with the resources required to meet its full combat operational capability.

2. A chart has been provided that contains columns indicating the required data. Complete this chart in order to provide the program manager with a complete picture of the combat resource requirements for this system.

SOURCE OF DATA:

Processes 402.2.4.3 (Determine Systems Combat Survivability) 402.2.4.4 (Define Systems Combat Resources Requirements) and 402.2.4.5 (Determine Component Essentiality in Combat).

RECOMMENDEDCOMBAT LOGISTIC SUPPORT RESOURCE
REQUIREMENTS DATA
(Process 402.2.4.6)

End Item Name:
Nomenclature:
Part Number:

Directions: For each item/component or system, provide the information as requested on the following.

Provide Columns indicating Days/Weeks/Months of Combat as appropriate for the System being analyzed

---

Combat Survivability

Resources Required

Quantity Required

Schedule

Quantity Available at Onset

Availability of Resupply

Essentiality Code

ANNEX D

LSA SUBTASK 402.2.4
VERT APPLICATION METHODOLOGY

VERT APPLICATION METHODOLOGY

BACKGROUND:

Venture Evaulation and Review Technique (VERT) was developed as a network analysis technique to facilitate management decision making. It allows a systematic planning and control of programs and enables managers to find solutions to real life managerial problems.

The terms of the APJ contract require the provision of batch files for each fo the VERT networks associated with the various Data Flow Diagrams in the APJ 966 projects.

APJ has been successful in adopting a method for the creation of these networks using the existing EXCELERATOR software package and establishing a naming convention compatible with that used in the Data Flow Diagrams. To do this APJ has made use of the PC model of VERT. A Structured Analysis project was used for this purpose. The prototype VERT network structure was made for one top level and one lower level data flow diagram.

The PC model of VERT has certain limitations built into it. To overcome some of thse limitations, certain conventions were used to create the input files. To maintain full generality a set of "dummy" default values were established. The model allows the user to alter the default values of time, cost, and performance to satisfy their specific requirements.

METHODOLOGY:

The basic symbols used to structure the network are:

(i) **SQUARES** - to indicate NODES. These are decision points in the project, or points beyond which the project cannot proceed unless certain criteria are met. There are two type of nodes, one which supports input operations and, the second type which supports output operations.

(ii) **LINES** - to indicate ARCS which are activities that have time, cost, and performance criteria associated with them.

In practice, however, both the arcs and nodes are similar, in that both have time, ocst, and performance criteria associated with them. The arcs have a primary and a cumulative set of time, cost, and performance criteria whereas the nodes have only a single cumulative set.

(iii) **NAMING CONVENTIONS** - Efforts have been made to keep the naming convention as compatible as possible to the Data Flow Diagrams. The naming convention used is displayed below.

NODES - All nodes are prefixed with the letter **N**. The individual Nodes are identified by a number and a letter. The number refers to the number of the node within the diagram and the letter refers to the diagram number in the project. In the event that a node has been referenced in an earlier diagram they also carry the number of the node in the earlier diagram as a prefix to the idividual node number.

N2.4A

N - All nodes are prefixed with the letter **N**
2 - Gives the number of the node it relates to in a higher level diagram or an earlier data flow diagram within the project. In this case it refers to node **N2** of the top level diagram.
4 - Gives the number of the node it relates to in a higher level diagram or an earlier data flow diagram within the project. In this case it refers to node **N2** of the top level diagram.
A - The nodes in each subsequent explosion are alloted an alphabetical suffix indication the number of the explosion diagram in the particular project. In this case it is the first lower level diagram within the project.

ARCS - All arcs are prefixed with either the letter **C** or **E**. The individual Arcs are identified by two numbers. The first number refers to the number of the arc within the diagram and the second number refers to the number of the diagram within thej project. In the event that an arc has been referenced in an earlier diagram they also carry the number of the arc in the earlier diagram as a prefix to the individual arc number. The arcs which are identified by the letter **E** have direct reference to a process in the corresponding data flow diagram and as usch are named the same as the process itself.

C - All arcs are prefixed with the letter C. In some cases, however, arcs carry a prefix of E. These particular arcs correspond to a process within the data flow diagram and are thus named the same as the process itself.

3.3- Gives the number of the arc it relates to in a higher level diagram or an earlier data flow diagram within the project. In this case it refers to arc number 3 in lower level diagram #3 within the project.

8.4- Indicates that this particular arc is the #8 arc in the #4 lowever level diagram of the project.

BATCH FILES

INPUT FILES - The input file names are given the extension *.IN.

OUTPUT FILES - The simulation output files are given the extension *OU.

PRINT FILES - The print files have been given the extension *.PR.

(This would allow subsequent updates of the input files to be numbered as **IN1...**, **OU1...**, **PR1...** etc.)

DEFAULT SETTINGS:

Control Record:

(i) The output option selected is "0" which provides a detailed listing, and high level of summary information.

(ii) The input record listing option selected is "0" which prints all input records.

(iii) The composite terminal node output option selected is "16" which assumes family mode and intrafamily transfer of histogram data.

(iv) The number of interations used are "10" in the demonstration model to facilitate operation in the debug mode if required.

(v) The composite node name and the network name are left as blanks.

(vi) In the run identification the name of the corresponding Data Flow Diagram is used as identification for the network description.

Arc Records:

(i) For each of the arcs the following records are provided:
(a) Master Arc Record
(b) Time Distribution Satellite
(c) Cost Distribution Satellite
(d) Performance Distribution Satelitte

(ii) The Distribution Satellite Records are created to provide a uniform statistical distribution.

(iii) The default values used for the minimum and maximum in each criteria are:

TIME	10.0	10.0
COST	10.0	100.0
PERFORMANCE	10.0	50.0

Node Records:

(i) Input Logic - The input logic for the nodes are either "**INITIAL**" or "**AND**".

(ii) Output Logic - The output logic has been defaulted to "**AND**" or "**TERMINAL**".

(iii) The output option indicator and the storage option indicator are defaulted to read "O".

(iv) The node description has also been left blank.

(It is again noted that the user can cange the default values to desired values as identified by the particular requirement and applications.)

DOCUMENTATION:

With every project report APJ will be providing the following documents relating to the VERT:

(i) A VERt network diagram corresponding to a particular data flow diagram.

(ii) A print out of the VERT network inputs for the particular data flow diagrams.

(iii) A floppy disc containing the sample input, print and the simulation output files for the default VERT network.

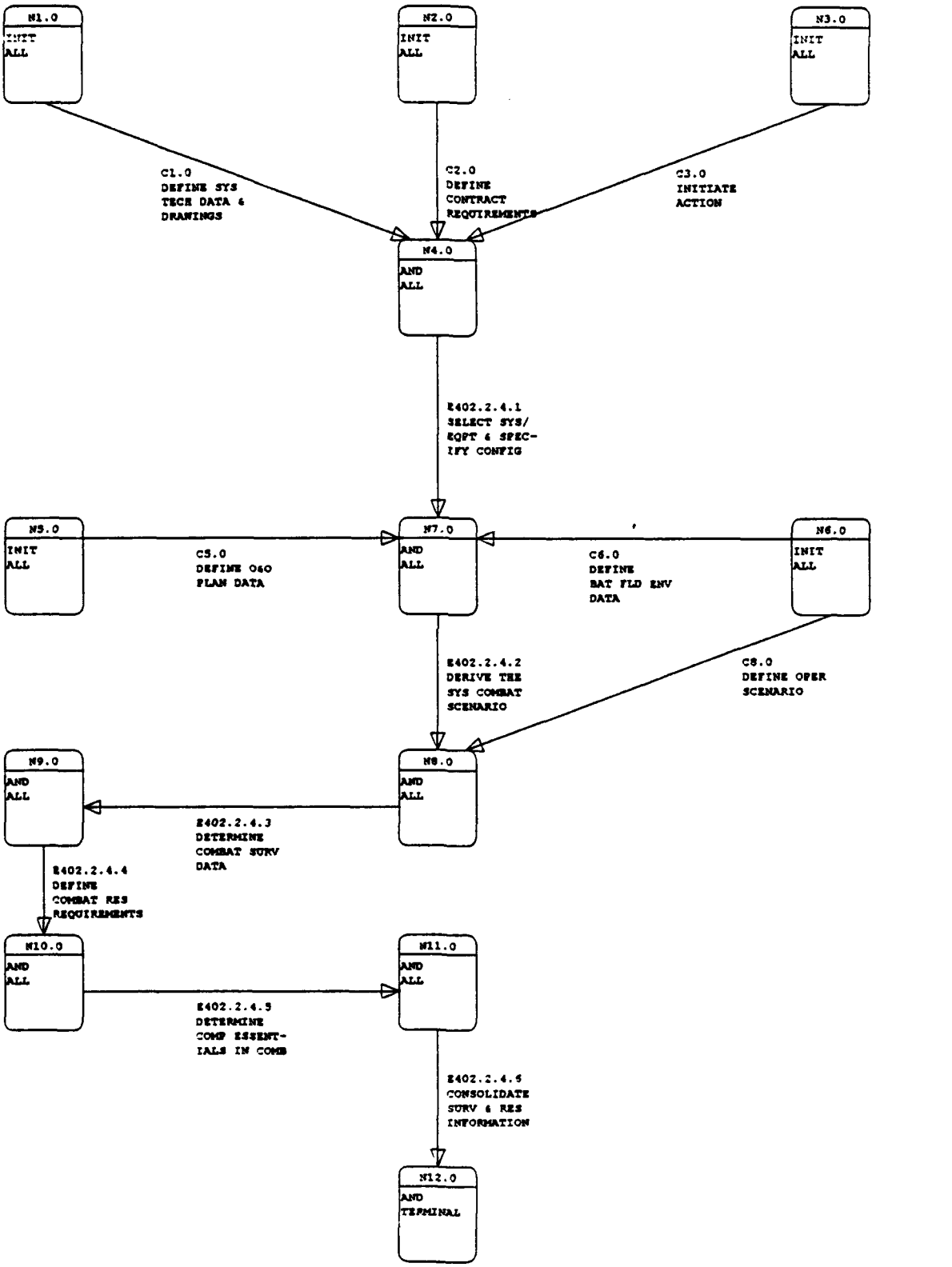

402.2.4 VERT TOPLEVEL
Created by: CEAO
Revised by: CEAO
Date changed: 27-SEP-89

```
1          N E W   N E T W O R K                    PAGE   1
                 1         2         3         4         5         6         7
        123456789012345678901234567890123456789012345678901234567890123456789012
     1. 0016  10                   COMBAT RESOURCE REQUIREMENTS TOP LEVEL
                  +         +         +         +         +         +         +
     2. C1.0     N1.0     N4.0      1.0 DEFINE SYSTEM TECHNICAL DATA AND DRAWINGS
     3. C1.0     DTIME 1          2      10.0      20.0
     4. C1.0     DCOST 1          2      10.0     100.0
     5. C1.0     DPERF 1          2      10.0      50.0
                  +         +         +         +         +         +         +
     6. C2.0     N2.0     N4.0      1.0 DEFINE CONTRACT REQUIREMENTS
     7. C2.0     DTIME 1          2      10.0      20.0
     8. C2.0     DCOST 1          2      10.0     100.0
     9. C2.0     DPERF 1          2      10.0      50.0
                  +         +         +         +         +         +         +
    10. C3.0     N3.0     N4.0      1.0 INITIATE ACTION
    11. C3.0     DTIME 1          2      10.0      20.0
    12. C3.0     DCOST 1          2      10.0     100.0
    13. C3.0     DPERF 1          2      10.0      50.0
                  +         +         +         +         +         +         +
    14. E402241 N4.0      N7.0      1.0 SELECT SYSTEM/EQUIPMENT AND SPECIFY CONFIGU
    15. E402241 DTIME 1          2      10.0      20.0
    16. E402241 DCOST 1          2      10.0     100.0
    17. E402241 DPERF 1          2      10.0      50.0
                  +         +         +         +         +         +         +
    18. C5.0     N5.0     N7.0      1.0 DEFINE O&O PLAN DATA
    19. C5.0     DTIME 1          2      10.0      20.0
    20. C5.0     DCOST 1          2      10.0     100.0
    21. C5.0     DPERF 1          2      10.0      50.0
                  +         +         +         +         +         +         +
    22. C6.0     N6.0     N7.0      1.0 DEFINE THE BATTLEFIELD ENVIRONMENT DATA
    23. C6.0     DTIME 1          2      10.0      20.0
    24. C6.0     DCOST 1          2      10.0     100.0
    25. C6.0     DPERF 1          2      10.0      50.0
                  +         +         +         +         +         +         +
    26. E402242 N7.0      N8.0      1.0 DERIVE THE SYSTEM COMBAT SCENARIO
    27. E402242 DTIME 1          2      10.0      20.0
    28. E402242 DCOST 1          2      10.0     100.0
    29. E402242 DPERF 1          2      10.0      50.0
                  +         +         +         +         +         +         +
    30. C8.0     N6.0     N8.0      1.0 DEFINE THE OPERATIONAL SCENARIO
    31. C8.0     DTIME 1          2      10.0      20.0
    32. C8.0     DCOST 1          2      10.0     100.0
    33. C8.0     DPERF 1          2      10.0      50.0
                  +         +         +         +         +         +         +
    34. E402243 N8.0      N9.0      1.0 DETERMINE COMBAT SURVIVABILITY DATA
    35. E402243 DTIME 1          2      10.0      20.0
    36. E402243 DCOST 1          2      10.0     100.0
    37. E402243 DPERF 1          2      10.0      50.0
                  +         +         +         +         +         +         +
    38. E402244 N9.0      N10.0     1.0 DEFINE COMBAT RESOURCE REQUIREMENTS
    39. E402244 DTIME 1          2      10.0      20.0
    40. E402244 DCOST 1          2      10.0     100.0
    41. E402244 DPERF 1          2      10.0      50.0
                  +         +         +         +         +         +         +
    42. E402245 N10.0     N11.0     1.0 DETERMINE COMPONENT ESSENTIALS IN COMBAT
    43. E402245 DTIME 1          2      10.0      20.0
    44. E402245 DCOST 1          2      10.0     100.0
    45. E402245 DPERF 1          2      10.0      50.0
                  +         +         +         +         +         +         +
```

```
                 1         2         3         4         5         6         7
        12345678901234567890123456789012345678901234567890123456789012345678901
1          N E W    N E T W O R K                PAGE   2
                 1         2         3         4         5         6         7
        12345678901234567890123456789012345678901234567890123456789012345678901
   46. E402246 N11.0    N12.0     1.0 CONSOLIDATE SURVIVABILITY AND RESOURCE INFO
   47. E402246 DTIME 1         2       10.0      20.0
   48. E402246 DCOST 1         2       10.0     100.0
   49. E402246 DPERF 1         2       10.0      50.0
                 +         +         +         +         +         +         +
   50. ENDARC
                 +         +         +         +         +         +         +
   51. N1.0    1  2 0 0
                 +         +         +         +         +         +         +
   52. N4.0    2  2 0 0
                 +         +         +         +         +         +         +
   53. N2.0    1  2 0 0
                 +         +         +         +         +         +         +
   54. N3.0    1  2 0 0
                 +         +         +         +         +         +         +
   55. N7.0    2  2 0 0
                 +         +         +         +         +         +         +
   56. N5.0    1  2 0 0
                 +         +         +         +         +         +         +
   57. N6.0    1  2 0 0
                 +         +         +         +         +         +         +
   58. N8.0    2  2 0 0
                 +         +         +         +         +         +         +
   59. N9.0    2  2 0 0
                 +         +         +         +         +         +         +
   60. N10.0   2  2 0 0
                 +         +         +         +         +         +         +
   61. N11.0   2  2 0 0
                 +         +         +         +         +         +         +
   62. N12.0   2  1 0 0
                 +         +         +         +         +         +         +
   63. ENDNODE
                 1         2         3         4         5         6         7
        12345678901234567890123456789012345678901234567890123456789012345678901
```

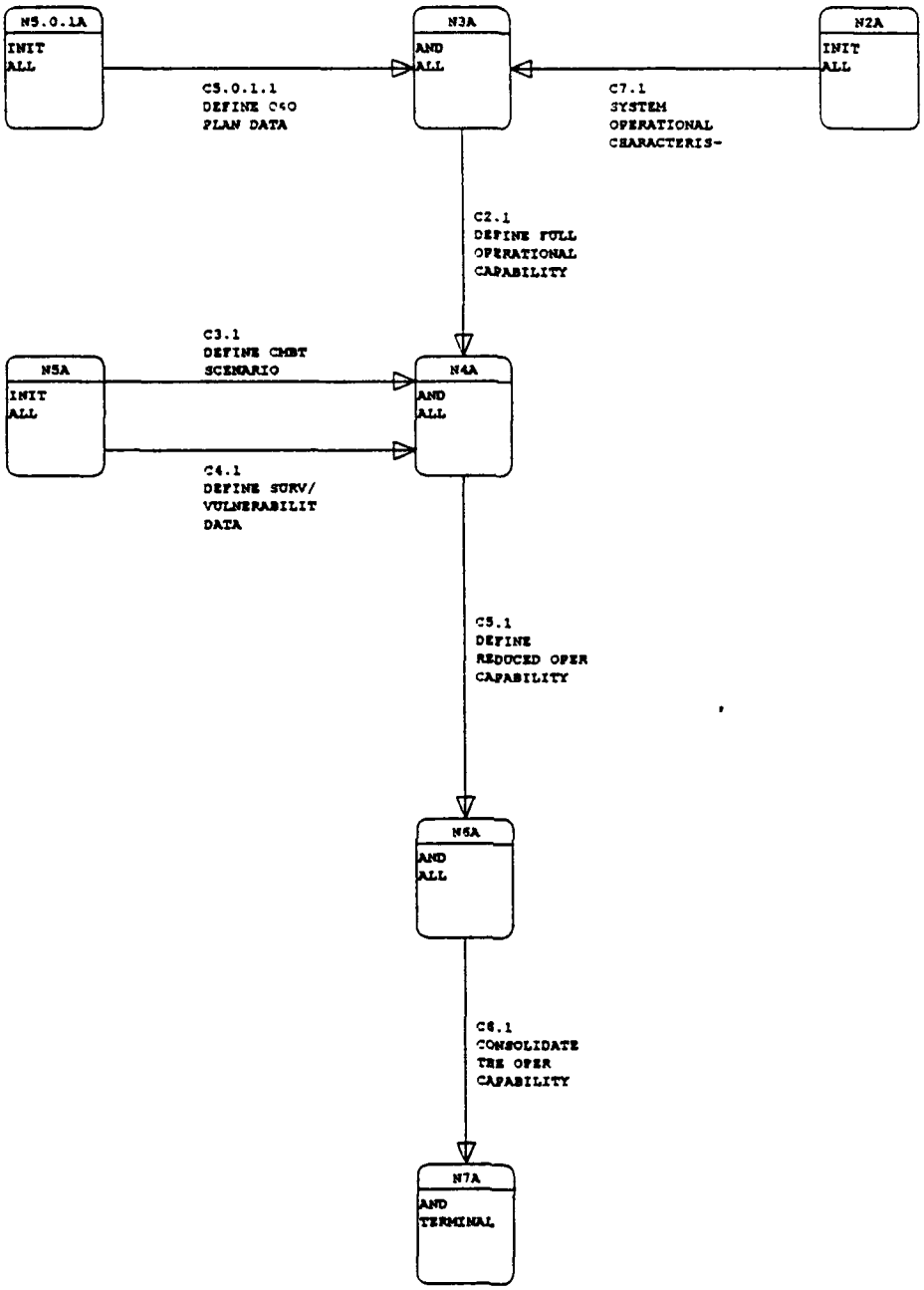

402.2.4.3A VERT SYS CMBT SURV
Created by: CEAU
Revised by: CEAU
Date changed: 02-OCT-89

```
1          N E W   N E T W O R K                PAGE   1
                1         2         3         4         5         6         7
       123456789012345678901234567890123456789012345678901234567890123456789012
    1. 0016  10                 SYTEM COMBAT SURVIVABILITY
                +         +         +         +         +         +         +
    2. C5.0.1.1N5.0.1A N2A      1.0 DEFINE O&O PLAN DATA
    3. C5.0.1.1DTIME 1         2      10.0      20.0
    4. C5.0.1.1DCOST 1         2      10.0     100.0
    5. C5.0.1.1DPERF 1         2      10.0      50.0
                +         +         +         +         +         +         +
    6. C2.1     N2A     N3A     1.0 DEFINE FULL OPERATIONAL CAPABILITY
    7. C2.1     DTIME 1        2      10.0      20.0
    8. C2.1     DCOST 1        2      10.0     100.0
    9. C2.1     DPERF 1        2      10.0      50.0
                +         +         +         +         +         +         +
   10. C3.1     N4A     N3A     1.0 DEFINE COMBAT SCENARIO
   11. C3.1     DTIME 1        2      10.0      20.0
   12. C3.1     DCOST 1        2      10.0     100.0
   13. C3.1     DPERF 1        2      10.0      50.0
                +         +         +         +         +         +         +
   14. C4.1     N4A     N3A     1.0 DEFINE SURVIVABILITY AND VULNERABILITY DATA
   15. C4.1     DTIME 1        2      10.0      20.0
   16. C4.1     DCOST 1        2      10.0     100.0
   17. C4.1     DPERF 1        2      10.0      50.0
                +         +         +         +         +         +         +
   18. C5.1     N3A     N5A     1.0 DEFINE REDUCED OPERATIONAL CAPABILITY
   19. C5.1     DTIME 1        2      10.0      20.0
   20. C5.1     DCOST 1        2      10.0     100.0
   21. C5.1     DPERF 1        2      10.0      50.0
                +         +         +         +         +         +         +
   22. C6.1     N5A     N6A     1.0 CONSOLIDATE THE OPERATIONAL CAPABILITY
   23. C6.1     DTIME 1        2      10.0      20.0
   24. C6.1     DCOST 1        2      10.0     100.0
   25. C6.1     DPERF 1        2      10.0      50.0
                +         +         +         +         +         +         +
   26. C7.1     N2A     N3A     1.0 SYSTEM OPERATIONAL CHARACTERISTICS
   27. C7.1     DTIME 1        2      10.0      20.0
   28. C7.1     DCOST 1        2      10.0     100.0
   29. C7.1     DPERF 1        2      10.0      50.0
                +         +         +         +         +         +         +
   30. ENDARC
                +         +         +         +         +         +         +
   31. N5.0.1A 1  2 0 0
                +         +         +         +         +         +         +
   32. N2A     1  2 0 0
                +         +         +         +         +         +         +
   33. N3A     2  2 0 0
                +         +         +         +         +         +         +
   34. N4A     2  2 0 0
                +         +         +         +         +         +         +
   35. N5A     1  2 0 0
                +         +         +         +         +         +         +
   36. N6A     2  2 0 0
                +         +         +         +         +         +         +
   37. N7A     2  1 0 0
                +         +         +         +         +         +         +
   38. ENDNODE
                1         2         3         4         5         6         7
       123456789012345678901234567890123456789012345678901234567890123456789012
```

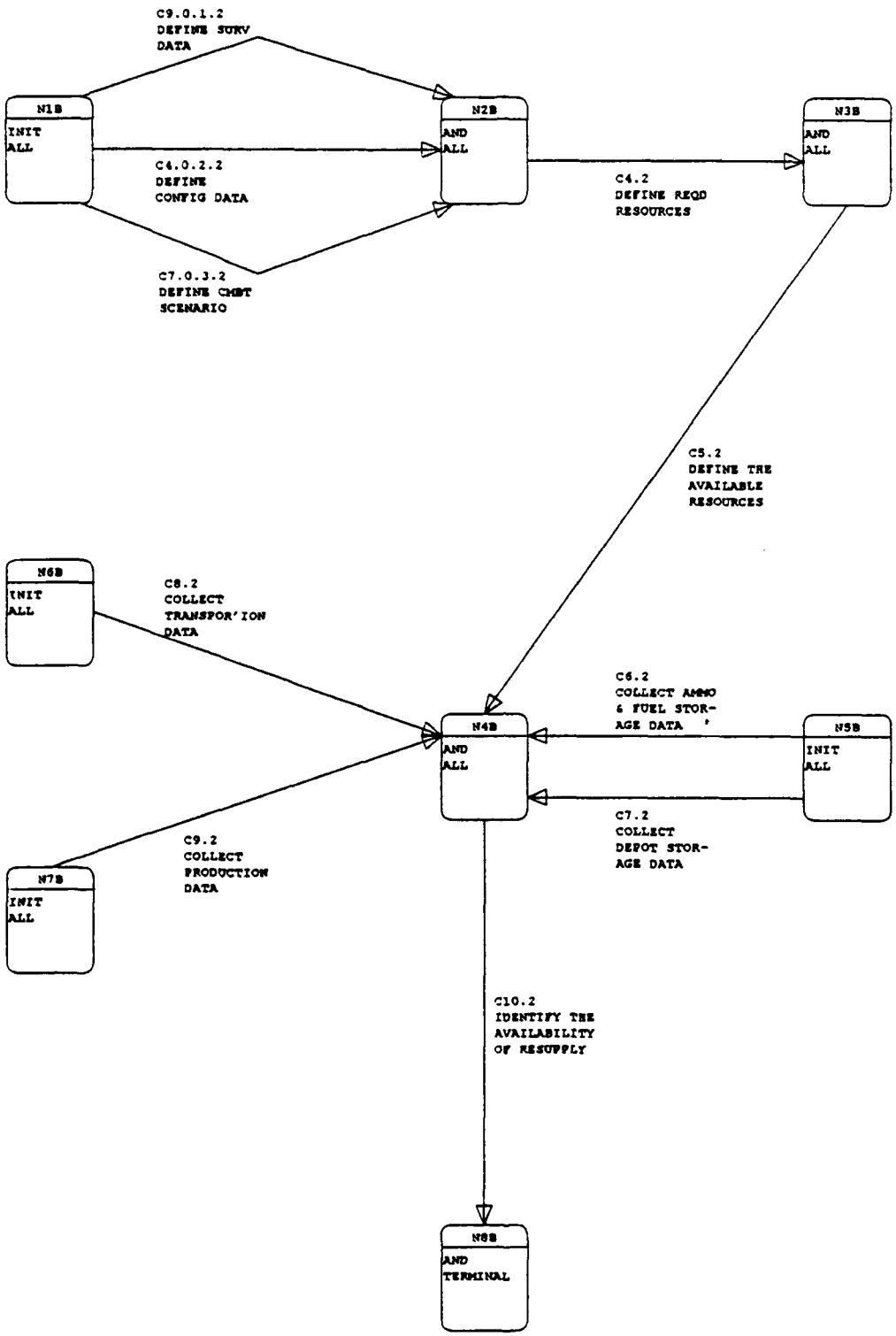

402.2.4.4A VERT CMBT RES REQ
Created by: CRAG
Revised by: CRAG
Date changed: 27-SEP-89

```
1          N E W   N E T W O R K                    PAGE   1
                 1         2         3         4         5         6         7
        123456789012345678901234567890123456789012345678901234567890123456789012
     1. 0016  10                    COMBAT RESOURCE REQUIREMENT
                 +         +         +         +         +         +         +
     2. C9.0.1.2N1B     N2B      1.0 DEFINE SURVIVABILITY DATA
     3. C9.0.1.2DTIME 1          2      10.0      20.0
     4. C9.0.1.2DCOST 1          2      10.0     100.0
     5. C9.0.1.2DPERF 1          2      10.0      50.0
                 +         +         +         +         +         +         +
     6. C4.0.2.2N1B     N2B      1.0 DEFINE CONFIGURATION DATA
     7. C4.0.2.2DTIME 1          2      10.0      20.0
     8. C4.0.2.2DCOST 1          2      10.0     100.0
     9. C4.0.2.2DPERF 1          2      10.0      50.0
                 +         +         +         +         +         +         +
    10. C7.0.3.2N1B     N2B      1.0 DEFINE COMBAT SCENARIO
    11. C7.0.3.2DTIME 1          2      10.0      20.0
    12. C7.0.3.2DCOST 1          2      10.0     100.0
    13. C7.0.3.2DPERF 1          2      10.0      50.0
                 +         +         +         +         +         +         +
    14. C4.2    N2B     N3B      1.0 DEFINE REQUIRED RESOURCES
    15. C4.2    DTIME 1          2      10.0      20.0
    16. C4.2    DCOST 1          2      10.0     100.0
    17. C4.2    DPERF 1          2      10.0      50.0
                 +         +         +         +         +         +         +
    18. C5.2    N3B     N4B      1.0 DEFINE THE AVAILABLE RESOURCES
    19. C5.2    DTIME 1          2      10.0      20.0
    20. C5.2    DCOST 1          2      10.0     100.0
    21. C5.2    DPERF 1          2      10.0      50.0
                 +         +         +         +         +         +         +
    22. C6.2    N5B     N4B      1.0 COLLECT AMMUNITION AND FUEL STORAGE DATA
    23. C6.2    DTIME 1          2      10.0      20.0
    24. C6.2    DCOST 1          2      10.0     100.0
    25. C6.2    DPERF 1          2      10.0      50.0
                 +         +         +         +         +         +         +
    26. C7.2    N5B     N4B      1.0 COLLECT DEPOT STORAGE DATA
    27. C7.2    DTIME 1          2      10.0      20.0
    28. C7.2    DCOST 1          2      10.0     100.0
    29. C7.2    DPERF 1          2      10.0      50.0
                 +         +         +         +         +         +         +
    30. C8.2    N6B     N4B      1.0 COLLECT TRANSPORTATION DATA
    31. C8.2    DTIME 1          2      10.0      20.0
    32. C8.2    DCOST 1          2      10.0     100.0
    33. C8.2    DPERF 1          2      10.0      50.0
                 +         +         +         +         +         +         +
    34. C9.2    N7B     N4B      1.0 COLLECT PRODUCTION DATA
    35. C9.2    DTIME 1          2      10.0      20.0
    36. C9.2    DCOST 1          2      10.0     100.0
    37. C9.2    DPERF 1          2      10.0      50.0
                 +         +         +         +         +         +         +
    38. C10.2   N4B     N8B      1.0 IDENTIFY THE AVAILABILITY OF RESUPPLY
    39. C10.2   DTIME 1          2      10.0      20.0
    40. C10.2   DCOST 1          2      10.0     100.0
    41. C10.2   DPERF 1          2      10.0      50.0
                 +         +         +         +         +         +         +
    42. ENDARC
                 +         +         +         +         +         +         +
    43. N1B     1  2 0 0
                 +         +         +         +         +         +         +
                 1         2         3         4         5         6         7
```

```
        123456789012345678901234567890123456789012345678901234567890123456789012
1          N E W    N E T W O R K                PAGE   2
                  1         2         3         4         5         6         7
        123456789012345678901234567890123456789012345678901234567890123456789012
    44. N2B     2  2 0 0
                 +         +         +         +         +         +         +
    45. N3B     2  2 0 0
                 +         +         +         +         +         +         +
    46. N4B     2  2 0 0
                 +         +         +         +         +         +         +
    47. N5B     1  2 0 0
                 +         +         +         +         +         +         +
    48. N6B     1  2 0 0
                 +         +         +         +         +         +         +
    49. N7B     1  2 0 0
                 +         +         +         +         +         +         +
    50. N8B     2  1 0 0
                 +         +         +         +         +         +         +
    51. ENDNODE
                  1         2         3         4         5         6         7
        123456789012345678901234567890123456789012345678901234567890123456789012
```

ANNEX E

STRUCTURED SYSTEMS ANALYSIS
Fundamentals

NOTE: Our presentation of Structured Analysis Fundamentals with the associated figures is reproduced verbatim in each report

ANNEX E
STRUCTURED SYSTEMS ANALYSIS

Fundamentals

Structured Systems Analysis (SSA) has recently become an industry standard for generating Data Flow Diagrams (replacing "logic diagrams" or "flow charts") to aid in coordinating the functions to be performed by a computer program and its associated Inputs/Outputs (I/O). During the SSA, each set of "flow charts" can be checked by the potential user to assure that there is complete agreement on what is to be done by the program, and how it is to be accomplished. It also provides considerable flexibility for updating or changing the program.

Six basic elements (see figure 1) are used in SSA:

1. Process (PRC)
2. Data Flow (DAF)
3. Data Store (DAS)
4. External Entity (EXT)
5. Data Flow Diagram (DFD)
6. Data Dictionary (DCT)

PROCESS (Represented by a Circle):

A function or operation to be performed which can be explained by a set of instructions representing a single task, e.g., "calculate interest on a loan", "prepare a draft report". If the Process description is too complex to describe in a few steps, it may be necessary to develop a lower level description (see below).

DATA FLOW (Lines interconnecting Processes or I/Os):

Each function or Process cannot be a stand-alone in a complex network. To have any meaning in a program, each process must be initiated by a previous action and/or provided information on which to act. Furthermore, a Process must result in an output which is the input to the next logical Process. These inputs, outputs, or initiating actions are identified as Data Flows, and are represented by the Data Flow lines indicating its point of origin and the process to which it provides data.

DATA STORE (Represented by two parallel lines):

Although some Processes generate data used as input to a succeeding Process, there is often a need to "gather or collect" information from files in which it is stored. This information may come from an external source (such as a MIL-STD, Army regulation, historical experience files, etc.), or an internal source or file in which data is temporarily stored for use by succeeding processes. These Data Stores can be visualized as a "file cabinet", in which the data are stored for later retrieval).

EXTERNAL ENTITY (Represented by a Rectangle):

Each program or logical process must have an initiating action, a "point" of disposition of the results, and possible input guidance or instructions. Each of these have authorities, functions, or applications which are independent of the program Process (although required by the program Process). Thus, these activities, agencies, or facilities are considered "External Entities" to the program.

DATA FLOW DIAGRAM:

The general arrangement of the above can be readily seen. First, the circle or Process describes what has to be done; the interconnecting lines represent the Data Flows, together with the specific description of all I/Os. The Data Stores identify the source and/or file designation of a data base, and the External Entities represent those activities remote from the Process, which are the source of guidance or the recipients of the program. This combination of Processes, Data Flows, Data Stores, and External Entities constitutes a "Data Flow Diagram". The unique feature of the Data Flow Diagram (DFD) is that each process can be considered independently, permitting a change to be made in one Process without a major change in the overall program.

DATA DICTIONARY:

The Data Dictionary consists of a complete description of each of the basic elements. For the Process, it contains a step-by-step description of what has to be performed. The description of the Data Flow identifies the nomenclature of the data, a detailed description of its content, and its source. The Data Stores and External Entities are described, including possible location.

The Data Dictionary (a living document) begins with a description of the first Process and is continually built-up as the Data Flow Diagrams are expanded, detailed, and eventually completed.

APPROACH TO PERFORMING STRUCTURED SYSTEM ANALYSIS:

The best approach to Structured Systems Analysis is to assume that the program consists of a series of processes, each of which are to be assigned to an inexperienced analyst. Each analyst is to be walked through the assigned process of the Program, explaining step-by-step what functions have to be performed or what actions have to be taken to accomplish the process. The analyst is also informed where the information is coming from (input Data Flow), what is to be generated by each process (output Data Flow), where the data base may to be found (Data Stores), and who to contact for guidance (External Entities).

The best way to initiate a SSA is to set down the point of origin of a program, its final goal(s), and the intermediate functions or actions needed to get from beginning to goal. Each step should be considered as a Process - some may be sequential and others parallel. Then, the steps needed to accomplish the Process should be described. If the description is complex and needs intermediate steps, the Process is then a candidate for an "explosion". That is, the top (or upper) level Process is considered as a "project" and its own Data Flow Diagram is prepared.

When writing the step-by-step procedures in the Process, certain elements of data (or information) must be made available for the procedure. Each element of data is considered as an input Data Flow, which is identified and described. The product (or result) of a Process is an output Data Flow element.

Each Data Flow to the Process must originate from:

1. an earlier Process
2. a Data Store (or file)
3. an External Entity.

These sources are also identified, described and put into the Data Dictionary. As soon as the last portion of the Data Flow Diagram has been described, the SSA is complete.

The structured Analysis phase is followed by Structured Design, then by programming and finally software test and validation. The organization of Structured Analysis and its relationship to Structured System Design is shown on Figure 2.

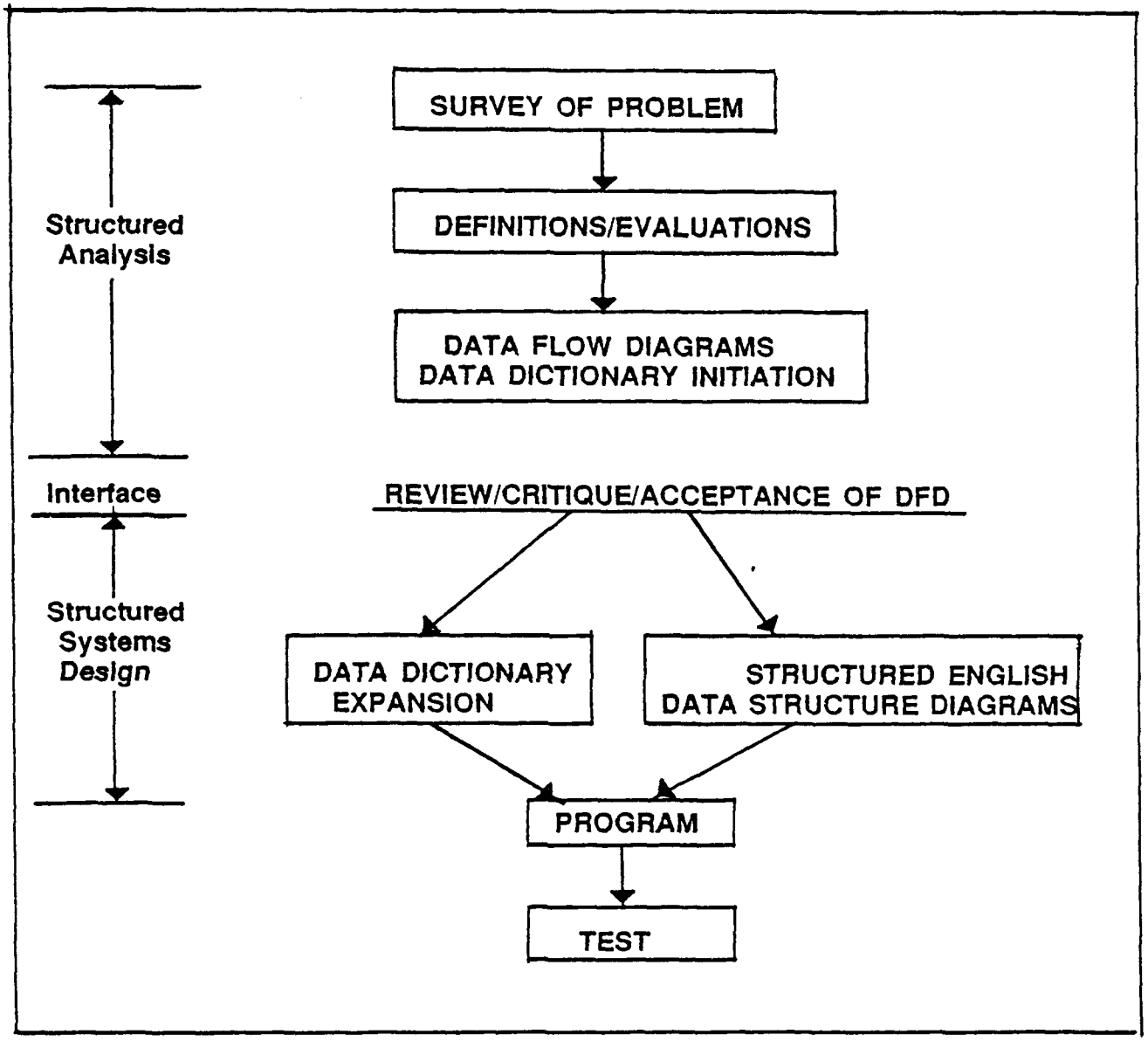

Figure 1. Structured Analysis & Structured Systems Design Organization

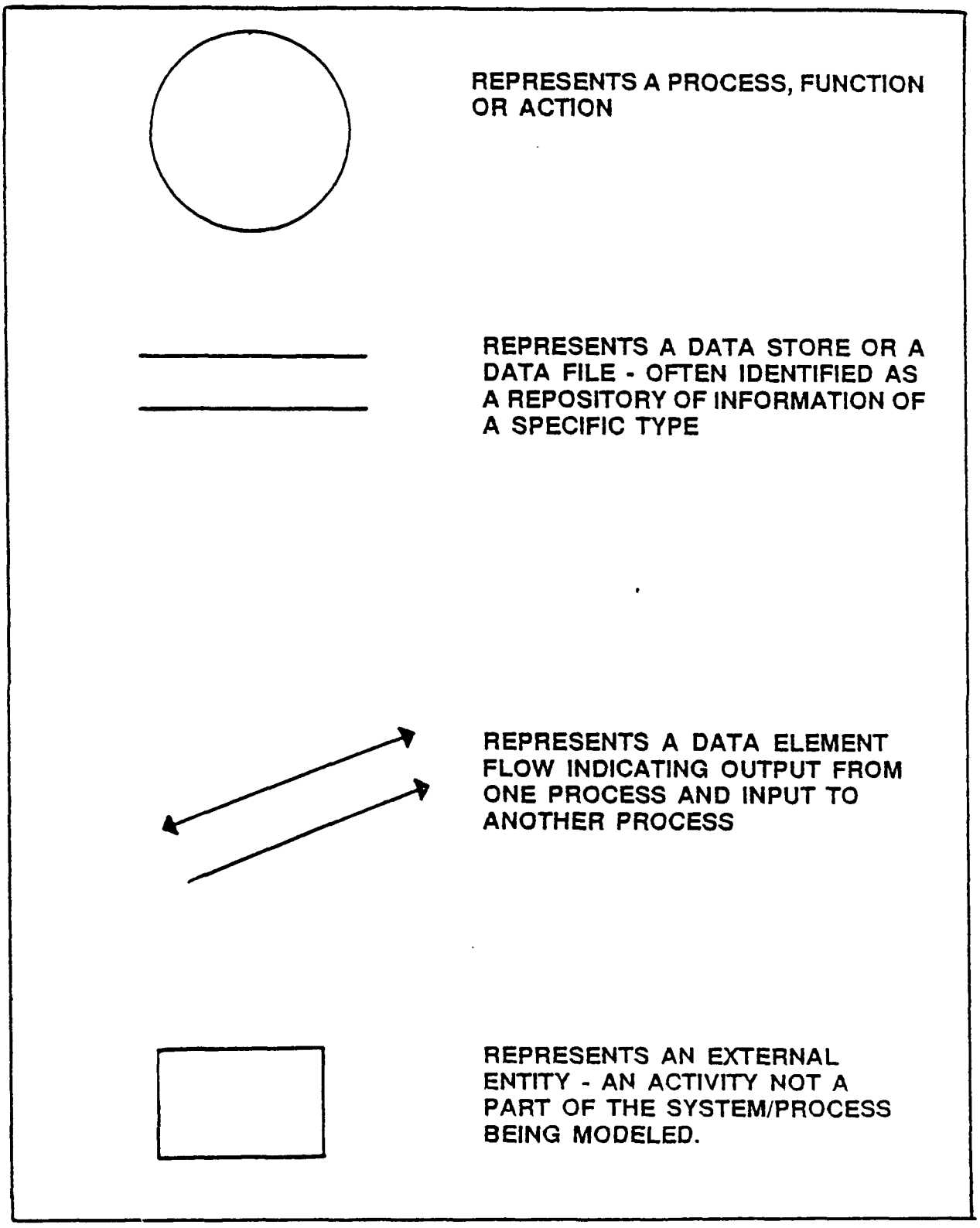

Figure 2. Standard DFD Symbol Definitions