AEDC-TR-94-12

Icing Simulation in The Aeropropulsion Systems Test Facility Propulsion Development Test Cell C-2

C. Scott Bartlett
Sverdrup Technology Inc., AEDC Group

January 1995

Final Report for Period May 13 through May 23, 1994

DTIC
ELECTE
FEB 07 1995
S D
B

Approved for public release; distribution is unlimited.

19950203 127

ARNOLD ENGINEERING DEVELOPMENT CENTER
ARNOLD AIR FORCE BASE, TENNESSEE
AIR FORCE MATERIEL COMMAND
UNITED STATES AIR FORCE

NOTICES

When U. S. Government drawings, specifications, or other data are used for any purpose other than a definitely related Government procurement operation, the Government thereby incurs no responsibility nor any obligation whatsoever, and the fact that the Government may have formulated, furnished, or in any way supplied the said drawings, specifications, or other data, is not to be regarded by implication or otherwise, or in any manner licensing the holder or any other person or corporation, or conveying any rights or permission to manufacture, use, or sell any patented invention that may in any way be related thereto.

Qualified users may obtain copies of this report from the Defense Technical Information Center.

References to named commercial products in this report are not to be considered in any sense as an endorsement of the product by the United States Air Force or the Government.

This report has been reviewed by the Office of Public Affairs (PA) and is releasable to the National Technical Information Service (NTIS). At NTIS, it will be available to the general public, including foreign nations.

APPROVAL STATEMENT

This report has been reviewed and approved.

J. KENT LOMINAC
ASTF Icing Program Manager

Approved for publication:

FOR THE COMMANDER

MICHAEL R. HOLQUIST, Col, USAF
Chief, Aeropropulsion Systems Test Division

REPORT DOCUMENTATION PAGE

Form Approved
OMB No. 0704-0188

Public reporting burden for this collection of information is estimated to average 1 hour per response, including the time for reviewing instructions, searching existing data sources, gathering and maintaining the data needed, and completing and reviewing the collection of information. Send comments regarding this burden estimate or any other aspect of this collection of information, including suggestions for reducing this burden, to Washington Headquarters Services, Directorate for Information Operations and Reports, 1215 Jefferson Davis Highway, Suite 1204, Arlington, VA 22202-4302, and to the Office of Management and Budget, Paperwork Reduction Project (0704-0188), Washington, DC 20503.

1. AGENCY USE ONLY (Leave blank)	2. REPORT DATE	3. REPORT TYPE AND DATES COVERED
	January 1995	Final, May 13-23, 1994

4. TITLE AND SUBTITLE

Icing Simulation in the Aeropropulsion Systems Test Facility Propulsion Development Test Cell C-2

5. FUNDING NUMBERS

0286

6. AUTHOR(S)

C. Scott Bartlett
Sverdrup Technology, Inc., AEDC Group

7. PERFORMING ORGANIZATION NAME(S) AND ADDRESS(ES)

Arnold Engineering Development Center/DOP
Air Force Materiel Command
Arnold Air Force Base, TN 37389-5050

8. PERFORMING ORGANIZATION (REPORT NUMBER)

AEDC-TR-94-12

9. SPONSORING/MONITORING AGENCY NAMES(S) AND ADDRESS(ES)

Arnold Engineering Development Center/DO
Air Force Materiel Command
Arnold Air Force Base, TN 37389-9010

10. SPONSORING/MONITORING AGENCY REPORT NUMBER

11. SUPPLEMENTARY NOTES

Available in Defense Technical Information Center (DTIC).

12A. DISTRIBUTION/AVAILABILITY STATEMENT

Approved for public release; distribution is unlimited.

12B. DISTRIBUTION CODE

13. ABSTRACT (Maximum 200 words)

The AEDC Propulsion Development Test Cell C-2 has been modified to provide simulated altitude icing conditions. Spray droplet clouds with droplet mass median diameters simulating natural icing clouds are produced with calibrated water atomizing spray nozzles. The proper amount of liquid water ingested by an engine in flight through icing clouds is simulated by injection of the proper water content into the airstream that enters a test engine. The addition of the icing simulation spray system provides the opportunity to conduct simulated icing testing in the large engine test cell. The system is capable of providing icing testing of large engines, inlets, windshields, wings, and other full-scale test articles. The results of system activation testing have been summarized. The system can be used to initiate clouds and reach steady controlled spray operation within 10 sec. The system is capable of varying the LWC over a five-to-one range within 10 sec. The simulation spray can be terminated within 5 sec. The uniformity of the distribution of the supercooled water at the test section has been determined. The transient response of the spray system and the ability to operate at extreme cold conditions for icing testing are improvements beyond previous AEDC icing simulation system capabilities.

14. SUBJECT TERMS

engine icing testing, icing simulation, spray system, altitude icing facility, liquid water content, mass median droplet diameter

15. NUMBER OF PAGES

51

16. PRICE CODE

17. SECURITY CLASSIFICATION OF REPORT	18. SECURITY CLASSIFICATION OF THIS PAGE	19. SECURITY CLASSIFICATION OF ABSTRACT	20. LIMITATION OF ABSTRACT
UNCLASSIFIED	UNCLASSIFIED	UNCLASSIFIED	SAME AS REPORT

COMPUTER GENERATED

PREFACE

The work reported herein was conducted by the Arnold Engineering Development Center (AEDC), Air Force Materiel Command (AFMC) under Program Element 65807F, Job Number 0286. The Air Force Project Manager was Kent Lominac. The results were obtained by Sverdrup Technology, Inc., AEDC Group. The Sverdrup Project Manager was Rich A. Walker. The testing was performed during the period from May 13,1994 through May 24,1994, and the manuscript was submitted for publication on December 16, 1994.

Accession For
NTIS GRA&I ☑
DTIC TAB ☐
Unannounced ☐
Justification
By
Distribution/
Availability Codes
Dist | Avail and/or Special
A-1

DTIC QUALITY INSPECTED 3

CONTENTS

Page

1.0 INTRODUCTION 5
1.1 Background 5
1.2 Key Icing Parameters 6
1.3 The Icing Environment 7
1.4 Icing Simulation Techniques at the AEDC 8
2.0 APPARATUS 8
2.1 C-Plant 8
2.2 ASTF Icing System 10
2.3 Spray System Control 13
2.4 Instrumentation 15
3.0 SYSTEM CHARACTERIZATION TESTING 16
4.0 RESULTS AND DISCUSSION 17
4.1 Spray Section Total Pressure Losses 17
4.2 LWC and Droplet MMD Transient Response 17
5.0 SUMMARY 19
REFERENCES 19

ILLUSTRATIONS

Figure

1. Cloud Icing Conditions 23
2. Schematic Showing Possible Stream Tube Configuration for Turbine Engine Icing Conditions 24
3. Compressor Liquid Water Content Loading Factor for Two Compressor Face Mach Numbers 25
4. Photograph of the Spray Array Viewed From Downstream Direction 26
5. Icing Proof Grid 27
6. Icing Proof Grid Installed for Cloud Evaluation 28
7. ASTF Design Air Supply and Exhauster Performance 29
8. Engine Face or Freejet Duct Mach Number Versus Standard Altitudes for 9-, 10-, and 12-ft-Diam Ducts 30
9. Sketch of Engine Icing Installation in the ASTF 31
10. ASTF Icing System Spray Nozzle Mounting and Spray Apparatus 33
11. Photograph of the Icing Spray System Installed in the ASTF 35
12. Icing Spray Bar Section, Nozzle Extension, and Spray Nozzle View 36

Figure | Page

13. Air-Assist Icing Spray Nozzle Cutaway View 38
14. Icing Spray Nozzle Water Flow, Atomizing Air, and Water Supply Pressure Relationships 39
15. Icing Spray Nozzle Droplet Mass Median Diameter Production as a Function of Atomizing Air-to-Liquid Mass Flow Rate Ratio 40
16. ASTF Icing Spray System Water and Air Service System Schematic 41
17. ASTF Icing Spray System Control Component Sketch 42
18. Spray System Pressure Loss Characteristic 43
19. ASTF Icing Spray Initiation 44
20. ASTF Icing Spray Stabilization and Termination Liquid Water Content and Droplet Diameter Traces 45
21. ASTF Icing Spray Cycle Between Stratiform and Cumuliform Cloud LiquidWater Content and Droplet Diameter Traces 46
22. ASTF Icing Spray System Ice Thickness Uniformity 47

NOMENCLATURE 48

1.0 INTRODUCTION

1.1 BACKGROUND

Engine icing occurs as aircraft fly through clouds of supercooled liquid water. The water impacts the forward facing surfaces of the aircraft and the engine. If the heat of fusion is removed, the impinging water freezes. Active surface heating systems are sometimes used to shed or evaporate water from the aircraft surfaces. Water remaining on the surface will either freeze on impact or as it travels along a surface away from impact. The resulting ice can cause physical damage if the ice sheds and strikes engine hardware. Ice adhering to airfoil surfaces will distort the airflow and lead to altered performance of the airfoil. In turbine engine and inlet icing, ice collection can eventually, sometimes in a matter of a few minutes, alter or block enough airflow to cause engine operability problems.

The development of analytical models is progressing but is not yet a replacement for testing to evaluate operation and performance of airfoils and engines in an icing environment. The methods available for testing in icing conditions are either flight testing in natural or simulated icing conditions or ground testing in either outdoor sea-level or altitude facilities with simulated clouds. Flight test in natural conditions is often perceived as the ultimate means for icing testing, but finding the required conditions can be rather difficult and expensive. Simulated clouds can be generated to provide the required cloud conditions, and this method reduces the time required to locate natural icing conditions. The technique requires a tanker aircraft to generate the cloud, such as the tanker used at Edwards Air Force Base in California, Ref. 1. Failure of ice protection systems during flight testing in icing conditions can lead to craft and crew safety concerns. The ice accretion and shedding cycle can consume numerous flight hours for the test vehicle, photographic, and chase aircraft to capture data.

Ground-based testing of engines and aerodynamic shapes, or combinations, offers an attractive alternative to flight test. Cloud conditions can generally be provided with great control and safety. Sea-level outdoor facilities cannot provide engine inlet conditions nor altitude pressures attained during flight. Altitude facilities can provide control of cloud conditions as well as the Mach number, pressure altitudes, and temperatures expected in flight. The altitude facility provides a means of controllable and repeatable icing testing. Extensive data acquisition is available, and seasonal independence is offered. Crew and craft safety is not compromised by engine or craft damage during icing testing in an altitude facility.

The icing test capabilities and techniques developed and continually refined over a period of over 25 years at the Arnold Engineering Development Center (AEDC) have been reported by various authors in Refs. 2, 3, 4, and 5. A continuation of the commitment to provide state-of-the-

art icing simulation is evidenced by the addition of a new icing simulation capability in the AEDC Engine Test Facility (ETF) Aeropropulsion Systems Test Facility (ASTF) Test Cell C-2.

The objectives of this report are to describe Test Cell C-2, describe the key icing parameters and the icing environment, describe the icing simulation techniques at the AEDC, describe the ASTF icing system apparatus and system control, and summarize the performance characteristics of the new icing system.

1.2 KEY ICING PARAMETERS

The parameters that are typically used to define an icing condition in flight are the liquid water content (LWC), droplet mass median diameter (MMD), the outside air temperature and altitude pressure, and the flight Mach number.

The LWC is the amount of liquid water existing in a volume of air, typically expressed as grams of liquid water per cubic meter of air. The droplet MMD is a single term used to describe the spectrum of droplets in a cloud. Droplets from near zero up to about 100 μm in diameter exist as supercooled liquid droplets in nature. The droplet MMD is the droplet diameter which divides the total mass of the droplets into two equal portions, above and below the droplet MMD. A survey of specific icing conditions simulated during testing at the AEDC indicates icing testing is typically conducted to simulate free-stream LWC values from 0.2 to 2.8 gm/m^3 at droplet MMD from 15 to 35 μm.

The outside air temperature is the ambient or static temperature through which the aircraft is flying. Statistical cloud meteorology data indicate that below –22°F most droplets are already frozen and hence an icing hazard seldom exists at outside air temperatures colder than –22°F. For aircraft flying at low Mach number but high engine power setting corresponding to high engine face Mach number, icing can exist when outside air temperature is above 32°F. The water can be supercooled as it accelerates through the inlet and undergoes a reduction in the local static temperature.

Altitude pressure is the ambient or static pressure. Icing normally occurs below 22,000 ft altitude, about 6 psia, but icing has been observed up to approximately 30,000 ft altitude, approximately 4.4 psia.

Flight Mach number and engine operation affect many aspects of icing and must be considered to obtain an adequate simulation in an altitude test facility and will be discussed later.

1.3 THE ICING ENVIRONMENT

The icing environment is generally characterized by relating LWC to droplet sizes occurring at various altitudes and temperatures. Historically, the Federal Aviation Regulations (FAR) and the Joint Airworthiness Regulations (JAR), Refs. 6 and 7, are used to specify icing conditions corresponding to either long, low liquid water content stratiform clouds, Figs. 1a and 1b, or shorter, more intense cumuliform clouds, Figs. 1c and 1d. Some other characterizations exist such as that for operation in clouds below 10,000 ft, Ref. 8.

The conditions that exist at the engine face in flight may not be those existing at free stream. The engine airflow might have either been accelerated or decelerated depending on the difference between flight and engine face Mach number, as described in Ref. 9 and illustrated in Fig. 2. If the engine requires less air than is available for the flight conditions, spillage around the inlet will occur. Although the water droplets tend to follow the air streamlines, their momentum prevents them from fully following the air streamlines. The result is the droplets tend to take a somewhat ballistic path into the engine and increase the amount of water to a value greater than the free-stream value of water content. For conditions when the engine requires more air than is available by ram the engine will gulp air. The droplets are not being pulled in as readily as the air. The result is a decrease in the amount of water content compared with free-stream water content. This water content modification effect is commonly called "scoop." Figure 2a depicts an inlet Mach number less than flight Mach number which causes the compressor face LWC to be greater than flight LWC. Figure 2b illustrates the case where the inlet Mach number is greater than the flight Mach number which causes the compressor face LWC to be less than free-stream LWC values. The engine compressor face water loading factor, the ratio of compressor face water content to free-stream water content, is presented in Fig. 3 as a function of flight Mach number for simulated compressor face Mach numbers of 0.25 and 0.50, depicting idle and high power settings for turbine engines. When the flight and inlet Mach number are the same, the loading factor is unity. Water loading factor is influenced by droplet MMD, as described in Refs. 10, 11, and 12. Figures 2 and 3 depict one-dimensional scoop effects.

When conducting engine tests in a direct-connect manner, the water "scoop" must be taken into account in providing the proper water content to the engine. Some inlets, especially long inlets of military craft, cause the water ingestion process to be altered and can cause non-uniform delivery of water across the engine face. Non-uniform water ingestion effects should be considered during direct-connect icing testing. During freejet testing the free-stream icing condition are set in the freejet flow. The scoop factor is not considered because the engine and inlet will collect water as in flight.

1.4 ICING SIMULATION TECHNIQUES AT THE AEDC

Icing conditions are simulated by placing the proper amount of liquid water into the test cell airflow. The flight stagnation conditions are set in the plenum which supplies airflow to the engine or other test article. The test cell exhaust pressure is set equal to the desired altitude pressure. Water droplets of the proper diameter are uniformly sprayed into the test cell airflow. The droplets sprayed into a cold airstream cool to the airstream temperature by mass and heat transfer. The humidity of the airstream upstream of the spray apparatus is maintained from 2 to 10 grains of water vapor per pound of air, depending on test conditions, to preclude the formation of ice crystals upstream of the water spray. The amount of water added to the test cell airflow is adjusted to account for evaporation from the droplets to the relatively dry airstream. The evaporation is predicted with an AEDC thermodynamic model described in Ref. 9.

The droplets are produced with water atomizing spray nozzles calibrated for droplet MMD production as a function of the ratio of atomizing air-to-liquid (water) mass flow rate, termed ALR. The amount of liquid water added to the airstream is set to provide the required test cell LWC. The water spray nozzles are placed within an array of horizontally oriented spray bars. Figure 4 is a photograph of the spray bar array viewed from downstream. In the photograph spray nozzles are not installed on the bars.

The uniformity of the supercooled water is gauged by placing a proof grid at the place where the test article inlet will be positioned . The proof grid for the ASTF icing system prior to installation in the test cell is shown in Fig. 5, and installed in Fig. 6 for spray evaluation tests. During uniformity verification testing, the grid is iced and the thickness of the ice build-up across the grid is measured with ultrasonic thickness gauges. The spray nozzle placements are changed as required until an acceptably uniform ice thickness across the duct is obtained. After the uniform distribution is obtained, the proof grid is removed, and the test article is installed. Details of proof grid distribution testing are provided in Ref. 13.

2.0 APPARATUS

2.1 C-PLANT

The ASTF consists of a conditioned air supply, two propulsion test cells, and the necessary test cell exhaust capabilities. The facility provides simulated altitude flight for large turbine engines. The air is supplied at pressure and temperature by the AEDC C-plant compressors and cooling or heating systems. The altitude simulation is obtained by exhausting the test cell with the C-plant exhaust side compressors. Dry air is used for testing at the AEDC to maintain humidity lower than saturation conditions in the test cell ducting. Atmospheric inbleed is used for extremely high

mass flow testing, but the ability to maintain dry air beyond 1500 lbm/sec is degraded. For atmospheric inbleed operation, the test cell inlet pressure must be below normal AEDC atmospheric pressure. The ASTF air supply and exhauster performance capability in terms of test cell inlet and test cell exhaust (altitude) pressure as a function of air mass flow rate is presented in Fig. 7. Atmospheric inbleed is used at mass flows greater than about 1500 lbm/sec. The amount of atmospheric inbleed allowed before the humidity level of the air directed into the C-2 test cell increases too much is a function of outside air humidity level. Controlled icing conditions can normally be simulated for test cell airflows up to approximately 1600 lbm/sec.

The engine face or freejet duct exit Mach number and altitude, at standard altitude pressures, that are available with 1600 lbm/sec air mass flow rate at an arbitrarily chosen 5°F static temperature are presented in Fig. 8. Three lines are shown corresponding to engine or freejet duct diameters of 12 ft, 10 ft, and 9 ft. Normal ambient atmospheric icing conditions exist below 22,000 ft altitude but can extend up to almost 30,000 ft altitude. Conditions above the diameter lines are available for icing testing.

2.1.2 Test Cell

The ASTF Propulsion Development Test Cell C-2, 28 ft in diameter and 85 ft long, can accommodate the testing of subsonic and supersonic air-breathing engines as well as inlets, windscreens, wings, and other test articles. Access into the test cell duct to inspect the test article can be attained within 5 to 8 min after an icing test. Dry airflows up to 1600 lbm/sec can be obtained for icing testing, depending on temperature and pressure. Higher air mass flow rates through the test cell are available to simulate, for example, an engine acceleration to higher power to shed ice from the fan.

2.1.3 Installation

The installation of a large turbine engine readied for a direct-connect icing test is presented in Fig. 9a. The spray duct diverges from the facility bellmouth to slow the flow around the spray nozzles. The spray system is installed in a 125-in.-diam spray duct. The spray duct then converges from the 125-in. diam into a duct to match the engine diameter. The spray travels to the engine and simulates the desired icing conditions. The configuration for a freejet test with the exit diameter of the freejet duct equal to the engine diameter is shown in Fig. 9b. The configuration is similar to the configuration presented in Fig. 9a with the engine removed. The icing proof grid installed (Fig. 9b) is placed where the engine inlet would be if the engine were installed.

2.2 ASTF ICING SYSTEM

The icing system consists of a spray system, air and demineralized water, and associated flow rate and temperature controls for the water and air systems. The heated water supply system provides water to heat the icing spray bars and to the spray nozzles. Heated air is used for spray water passage purge and to atomize the water in the spray nozzles.

2.2.1 Spray System

The key element of the icing simulation system is the spray apparatus. The spray apparatus consists of 199 spray nozzle ports located on 17 spray bars. A sketch of the nozzle port layout and a photograph looking upstream into the spray bars installed in the spray ducting is presented in Fig. 10. The spray bars are currently positioned into a 125-in.-diam spray duct. The spray bars have been manufactured so that they can be installed into a duct up to 136 in. in diameter, representing an increase in duct flow area of 18 percent. Figure 11 depicts the spray array installed in Test Cell C-2. The flow is from the right and exits the spray array to the left. The photograph depicts the orientation of the manifolds, spray bar valving, and spray bars with the convergent spray duct removed.

2.2.2 Spray Bar and Nozzles

The spray system uses commercially available, internal mixing, air-assist, atomizing nozzles. The spray bars provide plumbing to bring the water and atomizing air to the spray nozzles, provide support and mounting points for the spray nozzles, and promote mixing of the sprayed droplets into the airstream. The mixing occurs in the periodic wake shed from the aft end of the bluff body spray bars as reported in Ref. 14.

The spray bar contains the passages for the spray bar heating water, spray nozzle water, and spray nozzle atomizing air. Figure 12a is a photograph of some spray nozzle extensions and spray nozzles mounted in the spray bars. Figure 12b illustrates a cross section of the spray bar with a nozzle installed on an extension. The spray bar heating passage runs along the upstream edge of the bar. The passage is continuously supplied with heated water. The spray bar spray nozzle water passage is penetrated with tubes which carry water from the passage to the spray nozzles. The atomizing air passage supplies the air to atomize the water in the spray nozzle.

Stainless-steel skin is placed over the plumbing passages. "Stand-off" tabs are affixed to the spray bar and act to maintain an air gap between the skin and the plumbing passages. This air gap is a dead air space evacuated to the ambient test cell pressure and reduces heat loss from the spray bar fluid passages.

Electrical heating elements have been built into the aft edge of the spray bar to augment the heating water to provide protection from freezing for the spray bar internal water passages.

Spray nozzle extensions are used to place the nozzle far enough downstream from the spray bar so that the recirculation zone behind the bluff body does not wash water back onto the spray bar. Water that splashed back to the spray bar would freeze and present a foreign object damage potential to a test engine. A plastic cover is applied to the nozzle extension to insulate the extension from heat loss in the highly convective region behind the spray bar. The aerodynamic streamlined cap is used to prevent water from collecting around a recirculation area on the cap itself. The nozzle extension length and the shape of the nozzle cap were experimentally verified at the AEDC, Ref. 14.

The spray nozzles are air-assist atomizing spray nozzles as illustrated in Fig. 13. The nozzles are calibrated in a research test cell, Ref. 2, where relationships of droplet MMD versus ALR and water and airflow rate to supply pressures are determined. The nozzle operational characteristics are used to provide set points for the spray control system valves and in the selection of piping, valves, and instrumentation for the system design. Figures 14 and 15 illustrate the calibration curves for two typical spray nozzles used for icing simulation at the AEDC. Figures 14a and 14b illustrate the water pressure required to obtain a desired water flow rate at various atomizing air pressures for both nozzles. The curves also show the lines of constant mass flow rate atomizing air-to-liquid ratios (ALR). Figures 15a and 15b show the droplet MMD produced by the spray nozzles as a function of the ALR. The data are correlated by expressions within about ±5 μm.. The data presented later in this report show droplet MMD calculated from measured ALR by one of theses expressions.

The nozzle curves shown in Figs. 14 and 15 indicate the sensitivity of the water flow rate and the droplet MMD to changes in pressure delivered to each nozzle within an array of nozzles. These sensitivities were considered in the design of the spray array supply system. Pressure drop along any spray bar was minimized. The hydraulic head between spray bars is controlled to promote uniform water flow rate delivery and droplet MMD production across the spray array.

Water flow rate to the spray bar for atomization is metered and controlled with flow control valves. Of the 17 spray bars, 16 are grouped into eight banks of two spray bars each. The center spray bar operates alone. The banking reduces the number of control components and still provides reduction of the hydraulic head between bars to a tolerable level. The flow rate controlled atomizing air is supplied into each end of the spray bar to reduce the pressure loss through the bars. This feature helps maintain uniform droplet production along the spray bar by maintaining uniform atomizing air mass flow through each spray nozzle. The atomizing air is fed to the bars by a manifold which surrounds the spray duct.

Figure 16 is a simplified schematic of the air and water systems for the ASTF icing spray system. The water and air systems are described separately below. All spray system components in contact with the spray water and atomizing air are stainless steel to prevent corrosion and possible contamination of the spray system. Atomizing air and water are filtered to 3 μm to remove particulate from the spray system prior to the flow entering the spray nozzles.

2.2.3 Water System

A common water supply system provides the icing spray system with both spray bar heating water and with water to spray into the airstream. The water is stored in a 3000-gal stainless-steel storage tank. A 5-gpm demineralized water treatment system provides an on-line water tank refill capability.

The water is heated and pumped to a supply manifold. The water flows from the manifold to the spray bars and is passed through spray bar heating water passages. The spray bar heating water is returned from the heating passage to the water storage tank through a pressure control valve . This pressure control valve sets a pressure in a second manifold which supplies nine individual 1-in.-diam stainless-steel tubing lines. Each line is equipped with a water flow rate meter and a flow control valve. Of the nine individual lines, eight supply banks of two bars while the other line supplies only the center bar. The individual flow control valves in each of the nine lines divert the required amount of water away from the return and to the spray nozzles. All of the spray nozzle water, during spray operation, exits only through the spray nozzles. The total water flow rate is divided and metered into the nine individual lines in proportion to the percent of total spray nozzles supplied by each line. The proportioning is accomplished with individual line flow rate meters providing flow rate information to individual line flow rate control valves.

The maximum water head difference between spray bars is 14 in. of water, and represents a maximum 0.5-psi difference in water pressure supplied to any two spray nozzles on the top bar of the spray bar bank and the water pressure supplied to a spray nozzle on the bar in the bottom of the spray bar bank.

2.2.4 Atomizing and Purge Air System

A common supply is used for the atomizing air and for the purge air system of the icing spray system. The supply is heated with a 350-kW electrical heating system. The airflow is split into two lines downstream of the heater. The purge air is supplied to the spray system through an 8-in.-diam manifold which surrounds half of the spray duct. The purge system purges water from the spray bar during "non-spray" conditions and provides a flow of heated air through the spray nozzle water passage to keep it warm. A vent valve located in the line is controlled to maintain a constant air mass flow rate through the air heater, keeping the air at a relatively constant temperature.

The atomizing air is supplied to the spray nozzles through both ends of each of the 17 spray bars. The flow rate into the 8-in.-diam atomizing air supply manifold, which completely surrounds the spray duct, is metered with orifice and venturi type flow meters and is controlled with a flow control valve. All of the air supplied to the atomizing air manifold is delivered to the spray nozzles.

The spray nozzle model for a particular icing test configuration is selected to provide the maximum number of nozzles in the array and still allow water and atomizing air control of each spray bar bank. Using the maximum number of nozzles helps obtain a uniform distribution of liquid water at the test section during testing.

2.3 SPRAY SYSTEM CONTROL

2.3.1 Spray System Control Concept

The spray control system controls the total spray nozzle water flow rate to yield the required LWC by controlling the spray water delivered into each bank of spray bars. The atomizing airflow for the entire spray array is set to provide the correct nozzle ALR to produce the proper droplet MMD.

The control system for the spray system interfaces with the existing test cell services control system. Pre-determined cloud conditions are programmed into the control system. Custom clouds can be prescribed with inputs similar to those used to build the pre-set clouds. The inputs required are the cloud LWC, the droplet MMD, expected cloud water evaporation, the number of nozzles on each spray bar bank, and the type of nozzle (so the control program will know which spray nozzle operational map to use). The system then monitors the test cell airflow, temperature, and pressure and adjusts spray nozzle water flow rate and spray system ALR to deliver the proper LWC and droplet size to the test article.

A transient capability exists to vary LWC during the test. The control system is programmed with starting and ending LWC values and then, on command or on proper time interval, initiates the transient. The system first places appropriate valves into predetermined positions and then goes into automatic feedback control to fine tune the conditions. The automatic cloud control system can be programmed to provide up to nine different cloud LWC and droplet MMD levels.

A backup control capability of the spray system is provided through the ability to calculate water flow rate through each leg with the water leg valve position and supply pressure information available from the control system. The system can be placed into manual operation mode if required.

2.3.2 Spray System Operation

The spray system operates in three distinct modes: purge, fill, and spray. A sketch of the valving arrangement of one set of banked control spray bars is presented in Fig. 17, illustrating the spray bar water and air passages, the supply and drain manifolds, and the interface of the spray bars with

bar water and air passages, the supply and drain manifolds, and the interface of the spray bars with the test facility ducting. A cutaway showing only one spray nozzle is included in the sketch. The operation of one spray bar is described, the operation of the other spray bars is similar.

The purge operation eliminates water from the spray water passages. A 3-way valve, labeled 3WIN in Figs. 16 and 17, immediately downstream of the metered water inlet passage, blocks incoming water and opens the spray nozzle water passage to a water drain manifold. On the opposite side of the bar in the water passage circuit, another 3-way valve, 3WPRG, shuttles to close the normal water drain and opens the water passage to a high-pressure purge air supply manifold. Water that was in the spray nozzle water passage is sent through the 3WIN valve to the drain manifold. A trap valve in the drain opens in the presence of water, dumping the water overboard. A vent valve in the top of the drain manifold is opened to prevent water pressure from building up in the drain manifold and, hence, in the water passage. A pressure build-up in the manifold might cause unwanted water spray in the test cell. Proper purge operation quickly terminates water spray and maintains heated flow through the spray nozzle water passage and through the spray nozzles.

During the fill process, a solenoid valve, SOLEN, at the far end of the water passage is locked open. The 3-way valve, 3WIN, is positioned to admit metered water flow to the water passage. Simultaneously, the 3-way valve, 3WPRG, on the spray nozzle water passage is reversed, shutting off the purge flow and admitting water from the spray nozzle water passage through the SOLEN valve into a drain manifold without building pressure within the spray bar water passage. The bars are sloped so that residual purge air in the spray water passage rises in the sloping bar and is forced out of the passage as the passage fills with water. The residual air removal is essential to provide a "stiff" control of the water flow during spray operation. The bar water passage fills with water, yet the pressure in the passage is lower than the pressure required to start spraying. No water enters the test cell duct during the fill process. After a prescribed time, allowing the water passage to fill with water and removing any residual purge air, the drain valve, SOLEN, at the far end of the spray nozzle water passage is closed, causing the spray to begin rapidly across the complete spray array.

After the spray is initiated, the automatic flow control system begins to operate. Water flow rate to the individual spray banks is metered. Atomizing airflow into the manifold is metered to provide the correct atomizing ALR to produce the correct droplet sizes according to the ALR to droplet MMD relationship for the spray nozzles being used. The heated water in the bars prevents freezing in the water passages. Atomizing air is heated to prevent the water droplets from freezing as they are carried in the atomizing air that expands and cools as it leaves the spray nozzle. The heating requirements of the atomizing air are discussed in Refs. 15 and 16.

The spray is continued for the prescribed time either in steady fashion, or if required, through transient changes to another LWC value. At the proper time the spray is terminated as described in the purge process above. New test conditions may be set and new cloud conditions placed into the

control system program. The flow of water through the spray bar heating passage and the flow of purge air through the nozzle water and atomizing air passages of the spray bar are maintained while preparing for the next test. This operation prevents freezing in the spray bar on initiation of water flow for the next cloud simulation.

2.4 INSTRUMENTATION

Instrumentation is provided to determine the flight condition being simulated, the operation of the spray system, and the icing conditions being generated by the ASTF icing system. The data are recorded in either steady-state or transient format, and key parameters are displayed in the test cell control so the icing simulation system operation can be monitored.

2.4.1 Test Cell

The test cell is equipped with instrumentation to determine the simulated flight conditions by providing information on total temperature, total pressure, test cell air mass flow rate, and ambient pressure. Total pressure probes were installed on the icing proof grid and upstream of the spray apparatus during activation testing to collect data to determine total pressure loss through the spray apparatus.

2.4.2 Spray System

The icing spray system is instrumented to provide data to determine hydraulic, pneumatic, and thermal status of the spray system. Pressure instrumentation ports are provided on each spray bar water passage, on the atomizing air manifold, and at the atomizing airflow metering station. Thermocouples are installed in the atomizing air system and the water supply system to determine the fluid temperatures. Thermocouples are placed on each spray bar to measure skin temperatures. The water flow rate through each of the nine flow control legs is measured with dual-range, magnetic-type liquid flow rate meters. The atomizing air mass flow rate is measured with either orifice or venturi type flow meters depending on the atomizing airflow rate.

2.4.3 Icing Conditions

The icing conditions of cloud LWC and cloud droplet MMD are determined from the ALR calculated from measured parameters. The LWC is determined from the summation of water flow measured for each spray bar and from the total test cell air mass flow rate, determined with a bellmouth calibrated with critical flow venturi measurements, and the atomizing air mass flow rate. The ALR of the spray system is calculated by dividing the measured atomizing air mass flow rate to the spray nozzles by the water mass flow to the spray nozzles. The droplet MMD is calculated from the droplet MMD to ALR relationship for the particular spray nozzle model used.

2.4.4 LWC Uniformity

The uniformity of the water delivered to the test section was determined from the thickness of ice deposited across a "proof grid" installed in the test cell. Ice thickness was measured at 49 locations across the proof grid with ultrasonic thickness measurement transducers tuned to measure ice thickness. The ice thickness is determined by measuring the time for an acoustic wave starting at the pizeo-electric transducer to travel from the transducer to the ice-to-test cell air interface and back to the transducer. The time is divided by two times the speed of sound in ice. The thickness is calculated by a signal discriminator and processor circuit and then sent to the data recording system. The LWC uniformity measurement technique is described in Ref. 13.

3.0 SYSTEM CHARACTERIZATION TESTING

System characterization testing was conducted to verify the system operated as planned and to measure the steady-state and transient response of the spray system. The distribution of the liquid water at a simulated engine inlet was determined. Three cloud transitions and eight different steady clouds were evaluated during activation testing. Spray nozzle arrays of 71, 132, and 162 spray nozzles were used during activation. The results of some of the evaluations are discussed in detail below.

The total pressure loss through the spray bar system was determined by measuring the total pressure upstream and downstream of the spray array and determining the difference over a wide range of dynamic pressures approaching the spray apparatus.

The icing spray system was installed in the configuration illustrated in Fig. 9b. Extensive pretest icing spray system checks were performed to ensure the control system performed as required. Refinement of the controls was performed as necessary to obtain the proper water and atomizing flow rates and proper sequencing of spray bar purge and fill cycles. After pretest checks were completed, an approximate icing test condition simulating a flight Mach number and altitude was set in the test cell. A temperature well above freezing was set so clouds could be simulated without freezing water on the icing proof grid. The desired LWC and droplet MMD conditions were programmed into the automatic cloud control system. A complete cloud simulation sequence was performed. The water flow was initiated and the spray allowed to reach steady state. A cloud transition from a low to a higher LWC value was executed while monitoring cloud droplet MMD determined from spray nozzle ALR. A steady higher LWC cloud was attained, and then the LWC was set to the prescribed lower value. The cloud was then terminated, and the spray bar water passages were purged with heated air. The test cell was then brought to the proper, cold, simulated icing temperature and the complete cloud initiation, LWC transition, and cloud termination process were repeated.

The distribution of the LWC at the engine inlet location was determined from the ice accumulation on the proof grid. The proof grid testing was conducted by bringing the test cell temperature to a cold condition and initiating the icing spray for a period that allowed approximately one-quarter-in.-thick ice to be collected on the grid face. The cloud was then terminated. Ice thickness was measured with ultrasonic thickness probes mounted in the proof grid.

4.0 RESULTS AND DISCUSSION

The total pressure loss through the spray apparatus and the performance of the spray system were determined. The spray apparatus pressure loss characteristics, spray initiation, spray termination, transition between two different cloud LWCs, and resultant spray water uniformity are described.

4.1 SPRAY SECTION TOTAL PRESSURE LOSSES

The total pressure loss through the spray apparatus was determined for a range of test cell airflow rates. The measured pressure loss can be related to the dynamic pressure of the flow approaching the spray apparatus. The pressure loss data, as a function of dynamic pressure entering the spray array, show a pressure loss coefficient of 0.107, Fig. 18.

4.2 LWC AND DROPLET MMD TRANSIENT RESPONSE

The ability of a cloud spray system to initiate and stabilize at the target condition is important, especially for short duration clouds. If the spray system requires too long to stabilize, a significant percentage of the test is conducted at the wrong simulated icing cloud conditions.

The spray bar heating system was adequate to prevent freezing in the spray system water passages. Testing was conducted with water spray initiation to a level of 0.23 gm /m^3 at conditions simulating flight through total air temperatures of –20°F. The spray was initiated and maintained without freezing in the water passages with water temperatures comfortably above freezing.

The water flow rate into the spray bar water passage and also the LWC and droplet MMD after the spray issues from the spray nozzles are illustrated in Fig. 19. The spray system water flow rate climbs to a peak value while filling the empty spray nozzle water passage, as presented in Fig. 19a. Water is allowed to flow through the passage to remove residual purge air for a prescribed duration. The solenoid valve (valve SOLEN on Fig. 17), which permits water to pass into a drain, is closed at approximately 52 sec into the spray initiation process. Spray issues from the nozzles approximately 3 sec after the solenoid valve closes. Figures 19b and 19c illustrate the LWC and droplet MMD after the spray issues from the spray nozzles. Within 10 sec after the nozzles begin spraying, LWC is within 5 percent and droplet MMD is within 3 μm of the desired conditions.

The ASTF icing spray system has the capability to transition between levels of stable cloud LWC and droplet MMD to simulate continuous flight through stratiform and cumuliform cloud conditions. The spray control system maintains LWC and droplet MMD to within 5 percent and 1 μm of target values, respectively, during stable spray operation, as depicted in Fig. 20.

The cloud simulation spray was completely terminated within 5 sec from termination command to the control system. The LWC and droplet MMD during stable spray, transition to a higher LWC and droplet MMD, and cloud termination are shown in Fig. 21a. A transition from a lower LWC and droplet MMD to a higher LWC and droplet MMD and transition back to the lower values is shown in Fig. 21b. Overshoot and undershoot in the LWC and droplet MMD values are quickly damped by the control system. Actual values of LWC and droplet MMD are within 0.2 gm/m^3 of steady value within 5 sec, and within 0.1 gm/m^3 of the steady value within 10 sec. The droplet MMD is within 3 μm of the steady-state droplet MMD values within 10 sec after the command to change levels.

The transient spray initiation, change in cloud LWC and droplet MMD levels, and rapid termination represent a significant improvement from previous icing system operational capability. The addition of improved spray bar heating provisions and the use of nozzle extensions, Ref. 14, are adequate to prevent water freezing in the passages and on the aft edge of the spray bar and represent improvements in previous spray system capabilities. No ice was formed on the facility ducting during activation testing.

4.2.3 LWC Uniformity

The distribution of the LWC is proportional to the uniformity of the ice thickness accumulated across the icing proof grid, Ref. 13. A surface map of the thickness of ice collected across the proof grid is presented in Fig. 22. The surface distribution map provides an indication of the LWC distribution across the spray duct for a cloud corresponding to a duct average of 0.28 gm/m^3 LWC and 20-μm droplet MMD. The distribution data were collected at simulated flight Mach number of 0.4 at 10,000 ft standard altitude. The spray array was composed of 162 of the possible 199 spray nozzle placements. The resulting distribution, as determined from ice thickness indications from the ultrasonic thickness gages, is uniform within ±0.04 gm/m^3 over 70 percent of the duct area. The LWC uniformity values are determined using calculation techniques described in Ref. 13. The LWC degrades to zero at the duct wall. At a higher value of 2.1 gm/m^3, using an array of 132 spray nozzles, at a flight Mach number of 0.4 and 17,000 ft standard altitude, the LWC was uniform to within 0.1 gm/m^3 over 70 percent of the duct area.

The distribution of the cloud at the test section is dependent on several factors, including the duct geometry (contractions and expansions), the flight conditions being simulated, the droplet

MMD being produced, and most importantly the location of spray nozzles within the spray array. Icing testing at conditions different from those presented herein will lead to different cloud distributions. Each test case and test article installation is generally evaluated separately.

5.0 SUMMARY

The AEDC Propulsion Development Test Cell C-2 has been modified to provide simulated altitude icing conditions with dry airflows up to 1600 lbm/sec. Spray droplet clouds with droplet MMD simulating natural icing clouds are produced with calibrated water atomizing spray nozzles. The proper amount of liquid water ingested by an engine in flight through icing clouds is simulated by injection of the proper water content into the airstream that enters a test engine. The addition of the icing simulation spray system provides the opportunity to conduct simulated icing testing in the large engine test cell. The system is capable of providing icing testing of large engines, inlets, windshields, wings, and other full-scale test articles.

The system, installed at the Arnold Engineering Development Center (AEDC) Aeropropulsion System Test Facility (ASTF) Propulsion Development Test Cell C-2, has completed activation testing and is operational. The system provides simulated altitude icing conditions with a test cell dry airflow rate up to 1600 lbm/sec.

The activation test results have been summarized. The system can be used to initiate clouds and reach steady controlled spray operation within 10 sec. The system is capable of varying the LWC during a test. Response time to increase and decrease the LWC over a five-to-one range within 10 sec has been demonstrated. The icing simulation spray can be terminated within 5 sec. The uniformity of the distribution of the supercooled water at the test section has been determined. The transient response of the spray system and the ability to operate at extreme cold conditions for icing testing are improvements beyond previous AEDC icing simulation systems.

REFERENCES

1. Ashendon, R. A. "The Air Force Flight Test Center Simulated Icing and Rain Testing Capability Upgrade Program." AIAA 93-0295, January 1993.

2. Hunt, J. D. "Engine Icing Measurement Capabilities at the AEDC." AGARD-CP-236, 1978.

3. Gall, E. S. and Floyd, F. X. "Icing Testing Capability of the Engine Test Facility Propulsion Development Cell (J-1)." AEDC-TR-71-94 (AD-729205), 1971.

4. Bartlett, C. S., et al. "Icing Test Capabilities for Propulsion Systems at the Arnold Engineering Development Center." AGARD-CP-480, 1990.

5. Bartlett, C. S. and Phares, W. J. "Icing Testing of a Large Full Scale Inlet at the Arnold Engineering Development Center." AIAA-93-0299, January 1993.

6. Federal Aviation Administration, Federal Aviation Regulation, Part 25, 1984. "Airworthiness Standards: Transport Category Airplanes: Appendix C."

7. Joint Airworthiness Regulations, "Civil Aviation Authority, Printing and Publishing Services," Chelenham, Glos., England.

8. Jeck, R. K. "A New Data Base of Supercooled Cloud Variables for Altitudes up to 10,000 feet Above Ground Level and the Implications for Low Altitude Aircraft Icing." DOT/FAA/CT-83-21, August 1983.

9. Willbanks, C. E. and Schulz, R.J. "Analytical Study of Icing Simulation for Turbine Engines in Altitude Test Cells." AEDC-TR-73-144 (AD-770069), 1973.

10. Phiefer, G. D. and Maier, G. P. "Engineering Summary of Powerplant Icing Technical Data." FAA-RD-77-76, 1977.

11. Gelder, T. F. "Droplet Impingement and Ingestion by Supersonic Nose Inlets in Subsonic Tunnel Conditions." NACA TN 4268, 1958.

12. Bartlett, C S. "Icing Scaling Considerations for Aircraft Engine Testing." AIAA-88-0202, January 1988.

13. Bartlett, C. S., Stringfield, M. S., and Tibbals, T. F. "Determination of Liquid Water Content in the AEDC Engine Test Cells." AIAA 92-0165, January 1992.

14. Bartlett, C. S. "Turbine Engine Icing Spray Bar Design Issues." ASME 94-GT-340, June 1994.

15. Lazelle, B. D. "Conditions to Prevent Freeze-Out During Atomisation of Water Sprays for Icing Cloud Simulation." D. Napier and Son Limited, Bedfordshire, England, DEV/TN/ 262378, August 18, 1958.

16. Marek, C. J. and Bartlett, C. S. "Stability Relationship for Water Droplet Crystallization with the NASA Lewis Icing Spray Nozzle." NASA TM 100220.

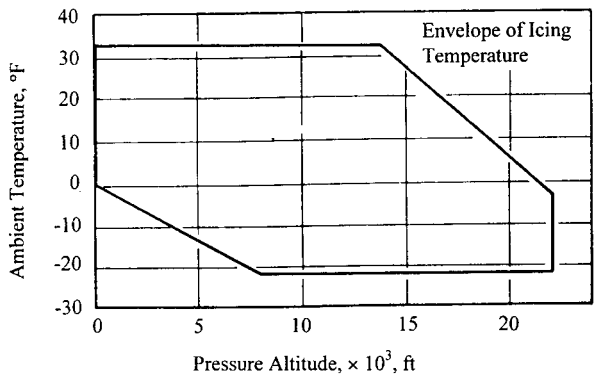

a. Ambient temperature versus ambient pressure, stratiform clouds.

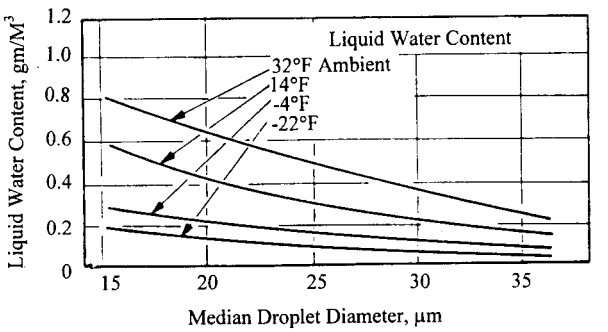

b. Liquid water content versus median drop diam, stratiform clouds

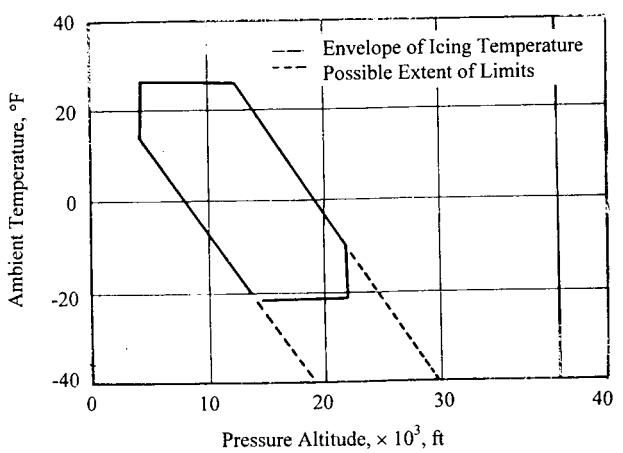

c. Ambient temperature versus ambient pressure, cumuliform clouds

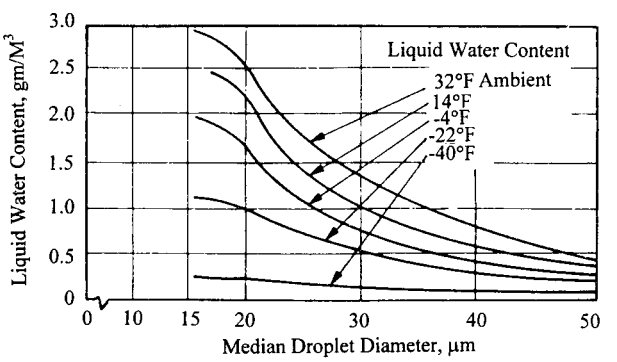

d. Liquid water content versus median drop diam, cumuliform clouds

Figure 1. Cloud icing conditions.

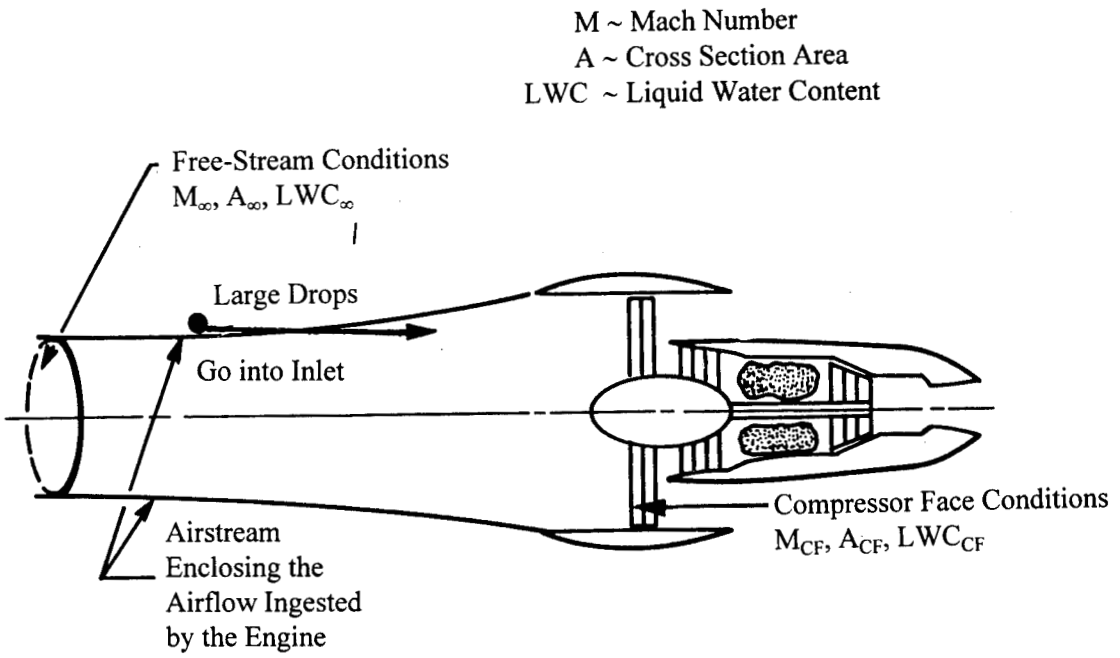

a. Inlet Mach number less than flight Mach number, $LWC_\infty < LWC_{CF}$

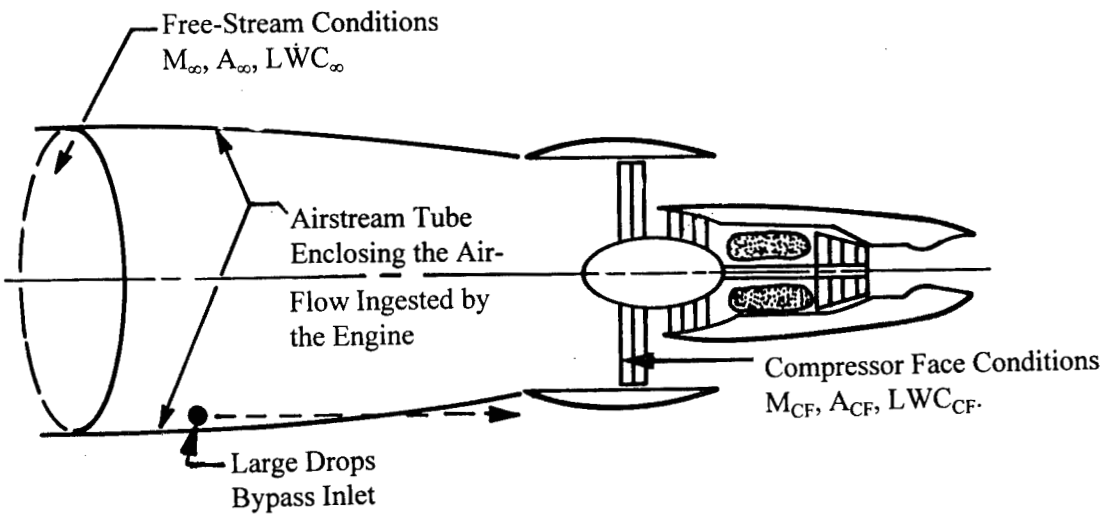

b. Inlet Mach number greater than flight Mach number, $LWC_{CF} < LWC_\infty$

Figure 2. Schematic showing possible stream tube configuration for turbine engine icing conditions.

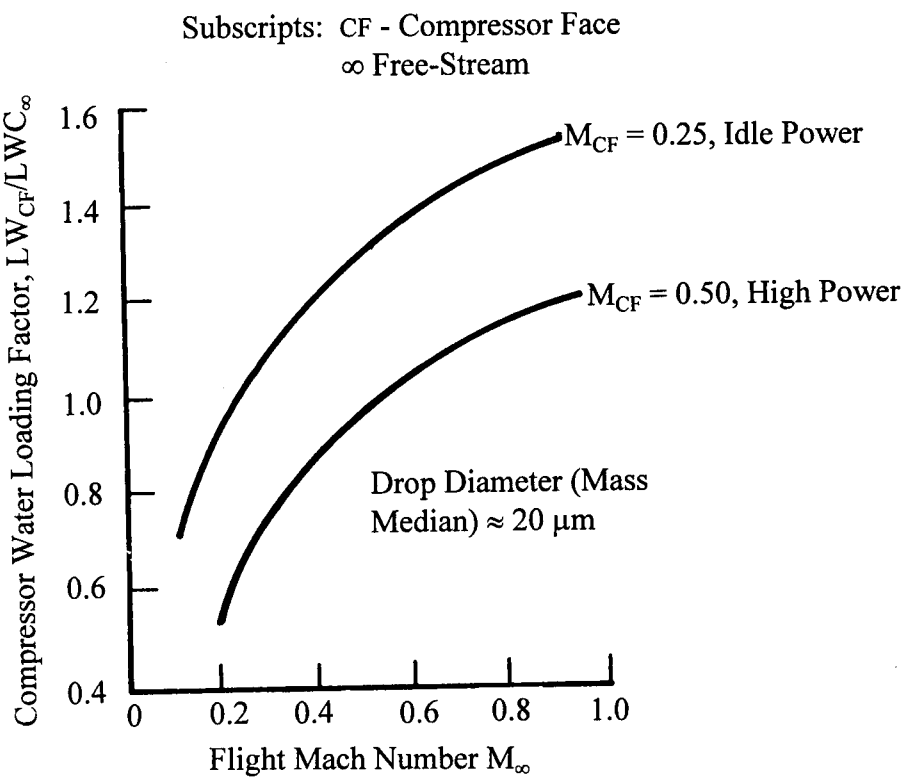

Figure 3. Compressor liquid water content loading factor for two face Mach numbers.

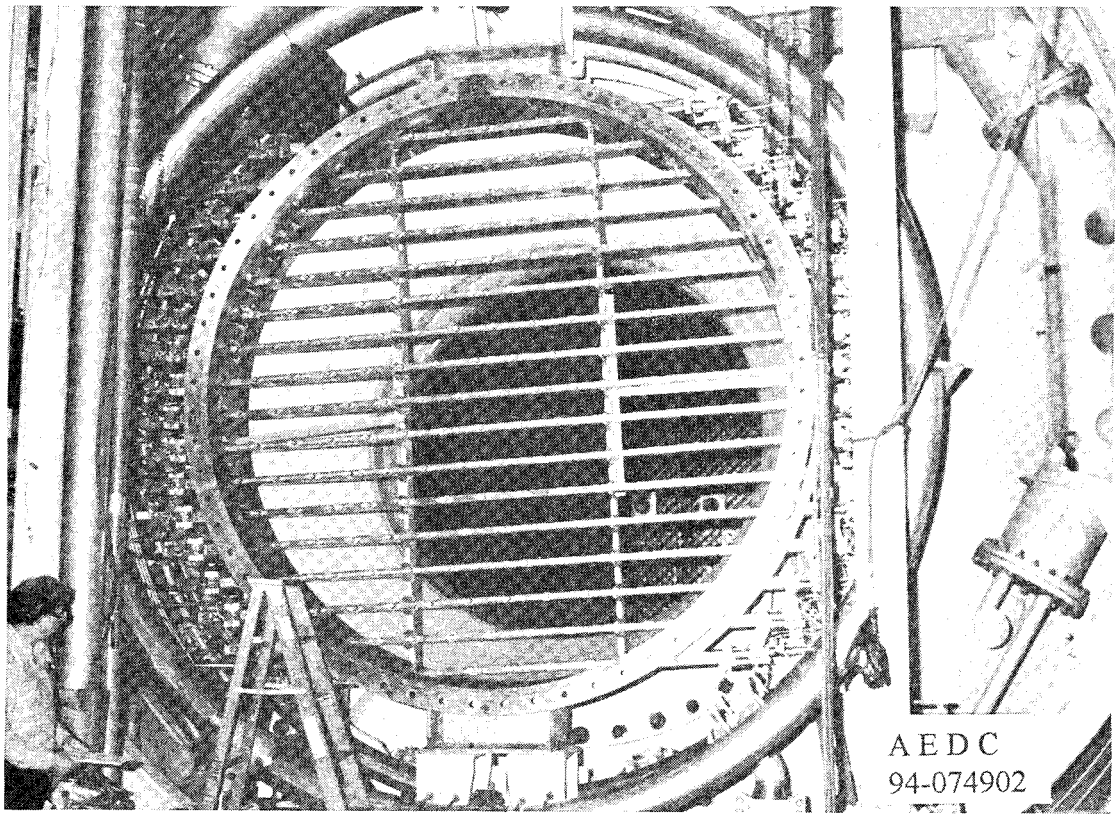

Figure 4. Photograph of the spray array viewed from downstream direction.

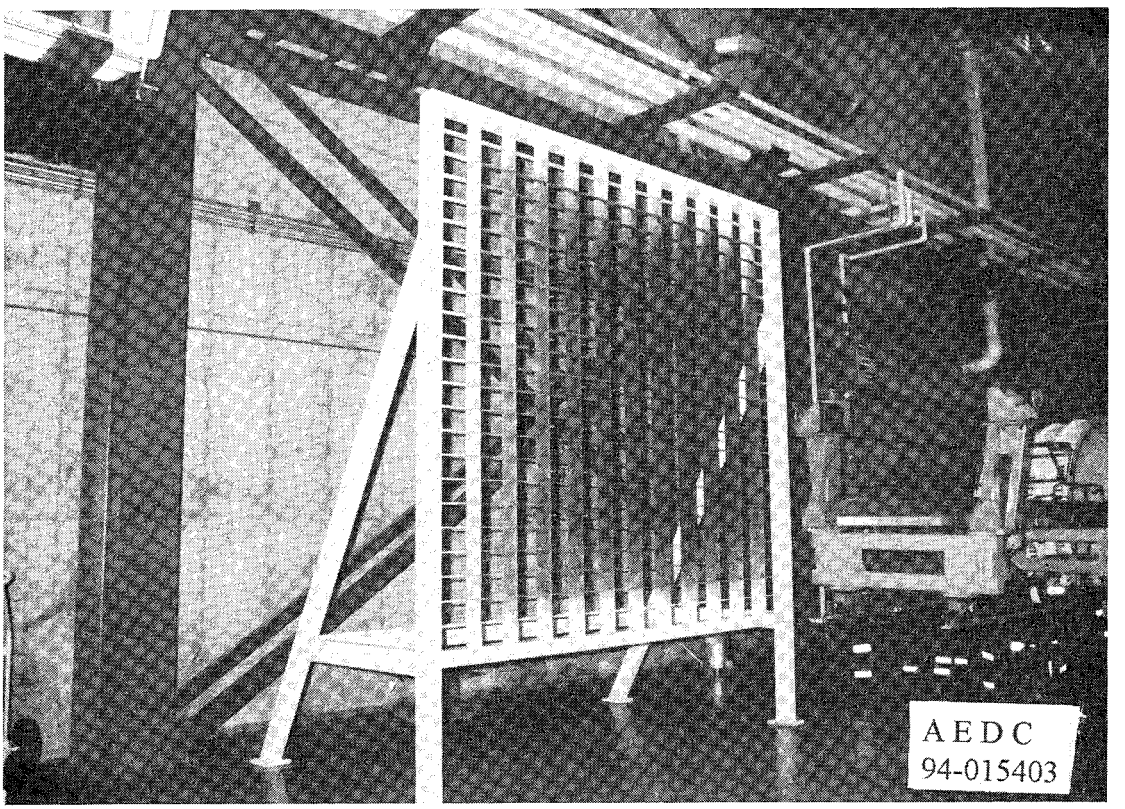

Figure 5. Icing proof grid.

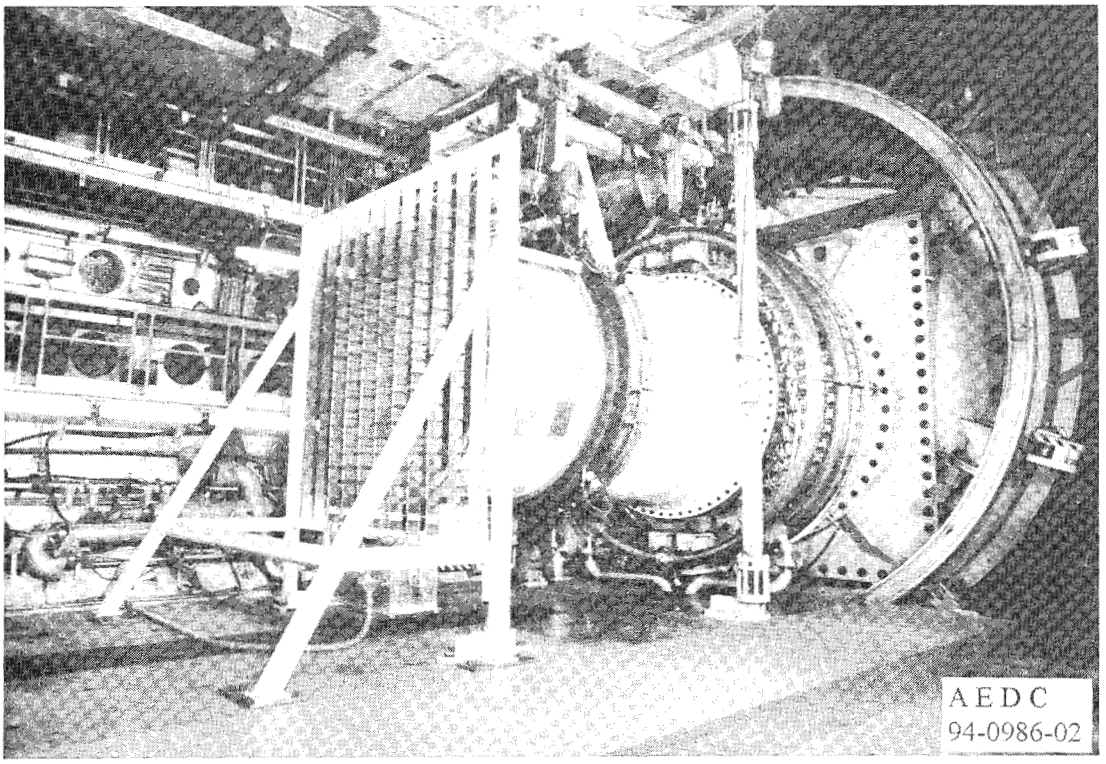

Figure 6. Icing proof grid installed for cloud evaluation.

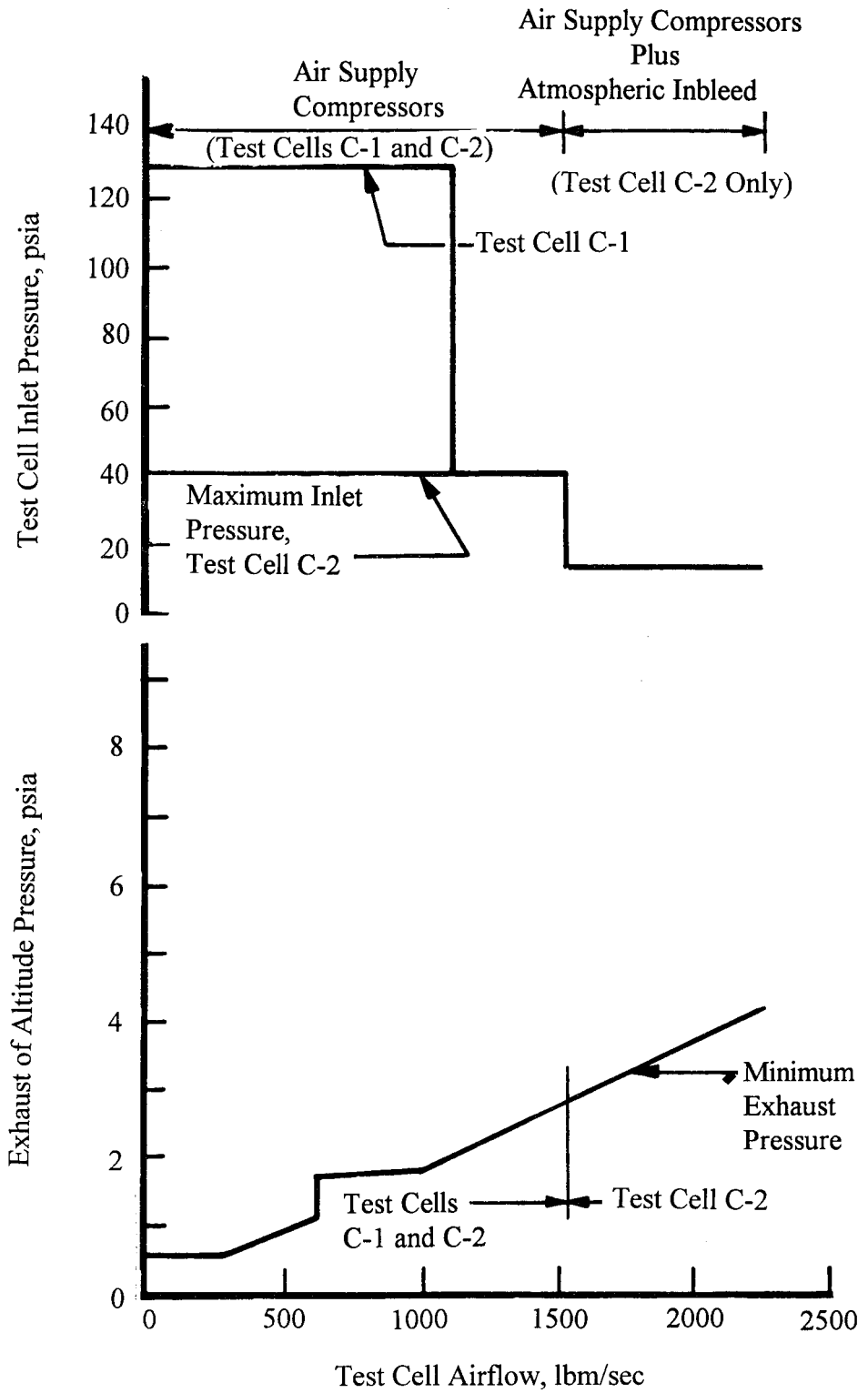

Figure 7. ASTF design air supply and exhauster performance.

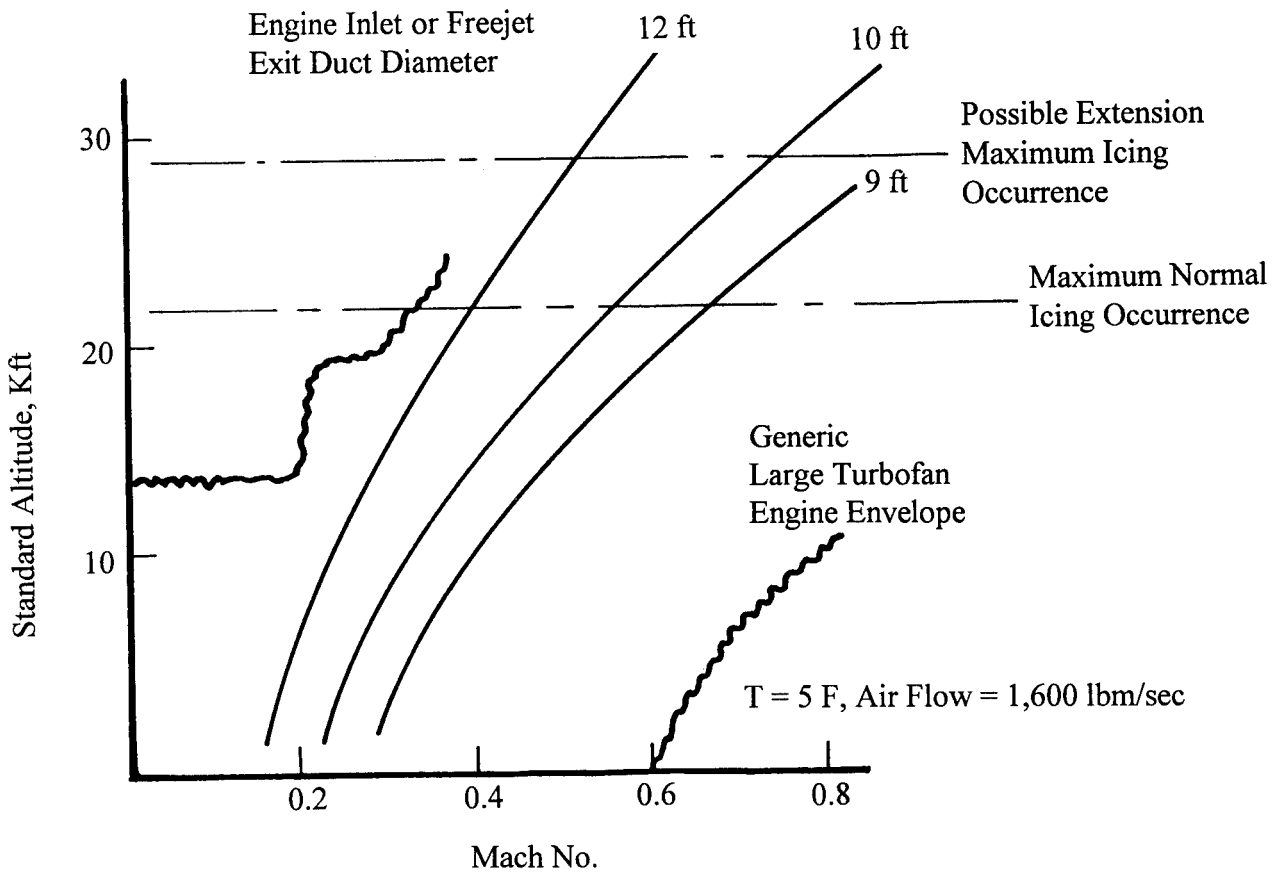

Figure 8. Engine face or freejet duct Mach number versus standard altitudes for 9-, 10-, and 12-ft diam ducts.

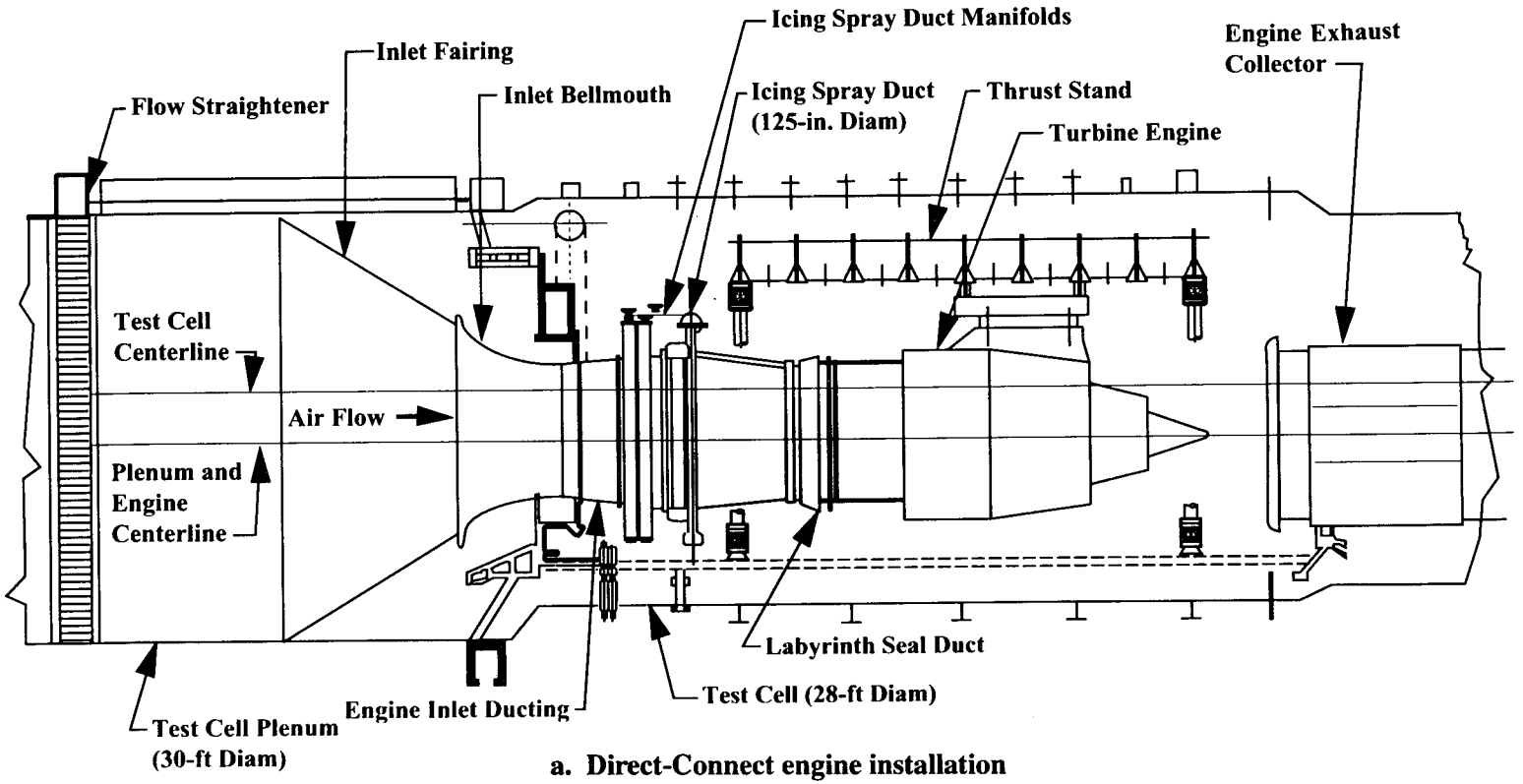

a. Direct-Connect engine installation

Figure 9. Sketch of engine icing installation in the ASTF.

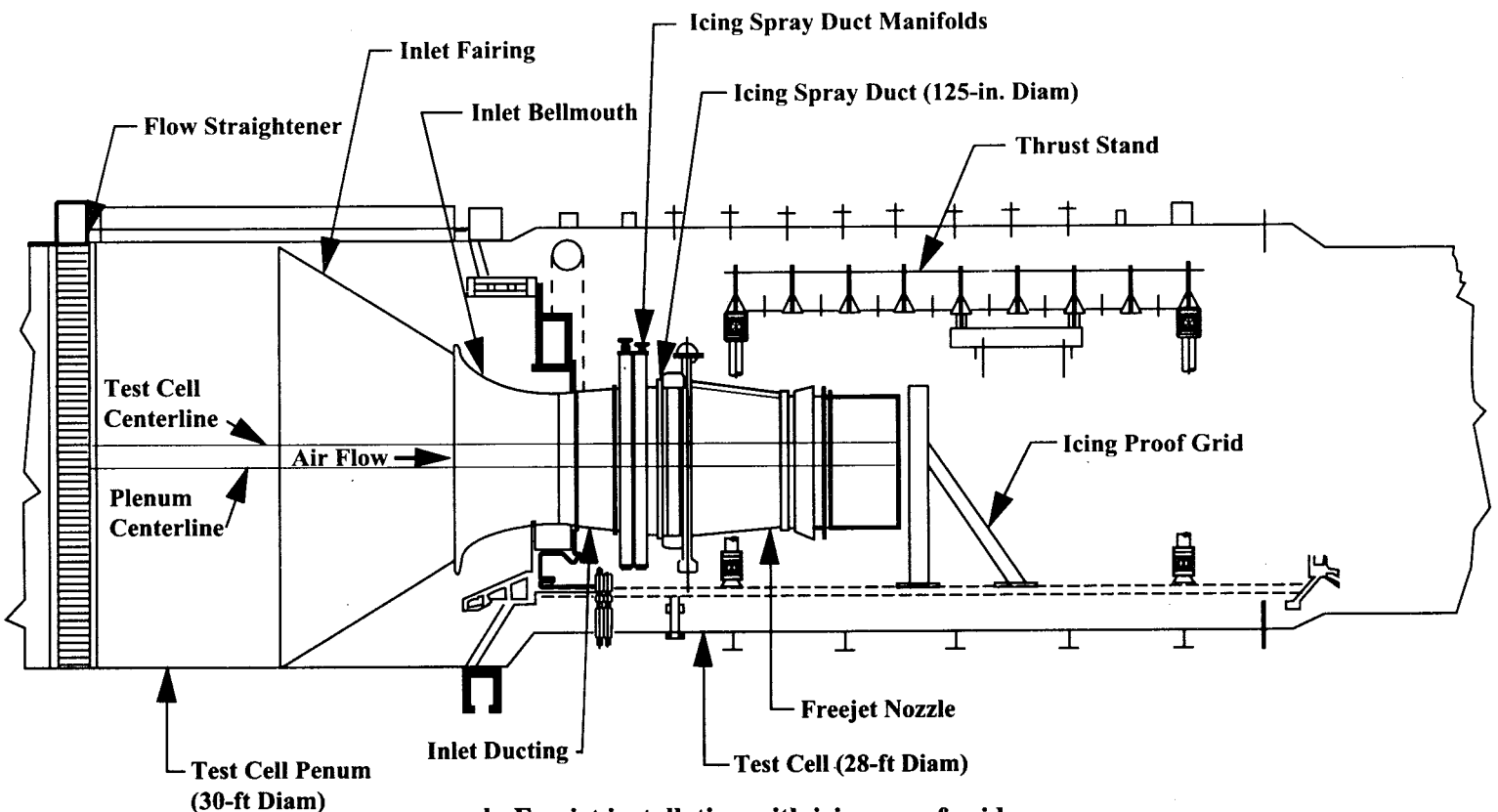

b. Freejet installation with icing proof grid.
Figure 9. Concluded.

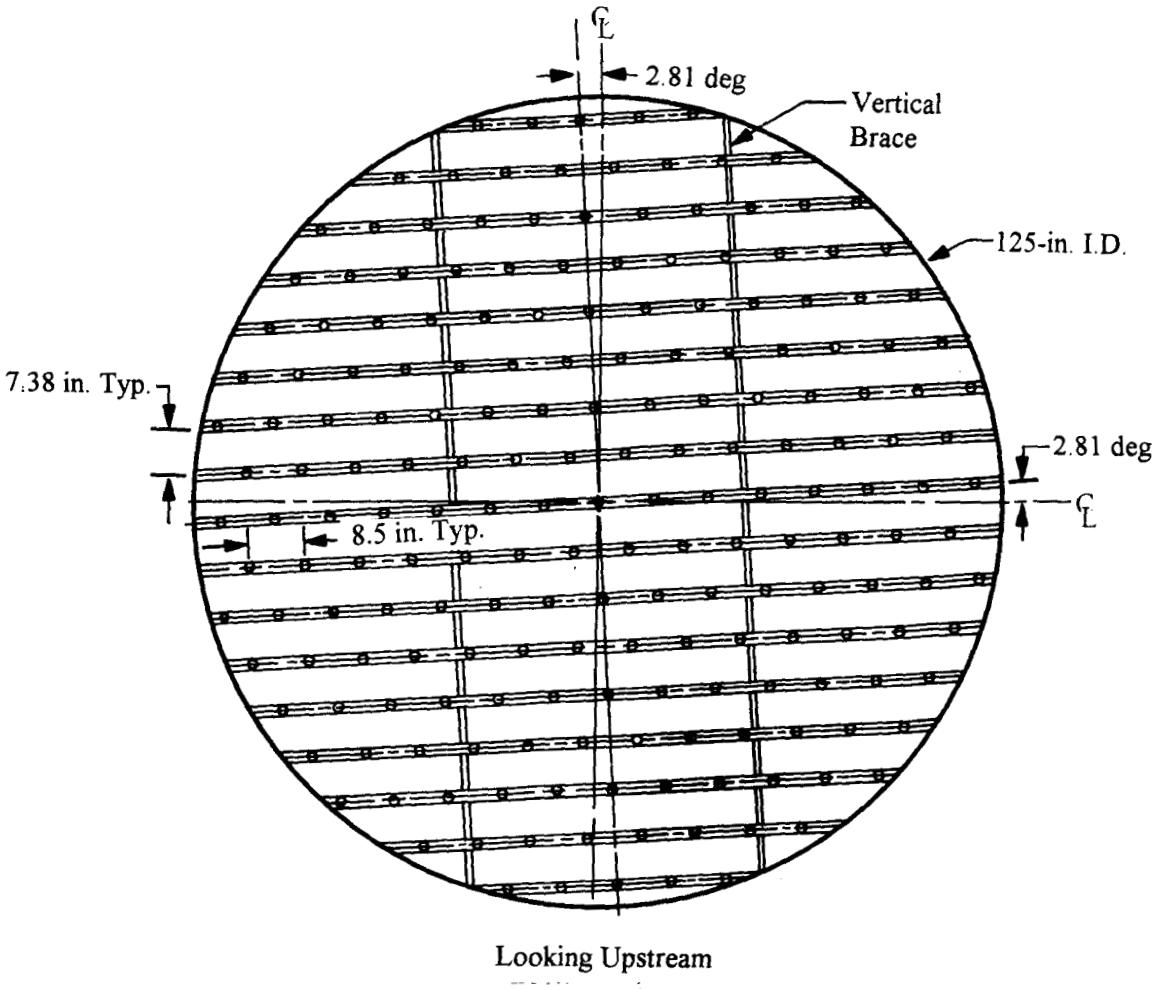

a. Sketch of spray bars and nozzle ports

Figure 10. ASTF icing system spray nozzle mounting and spray apparatus.

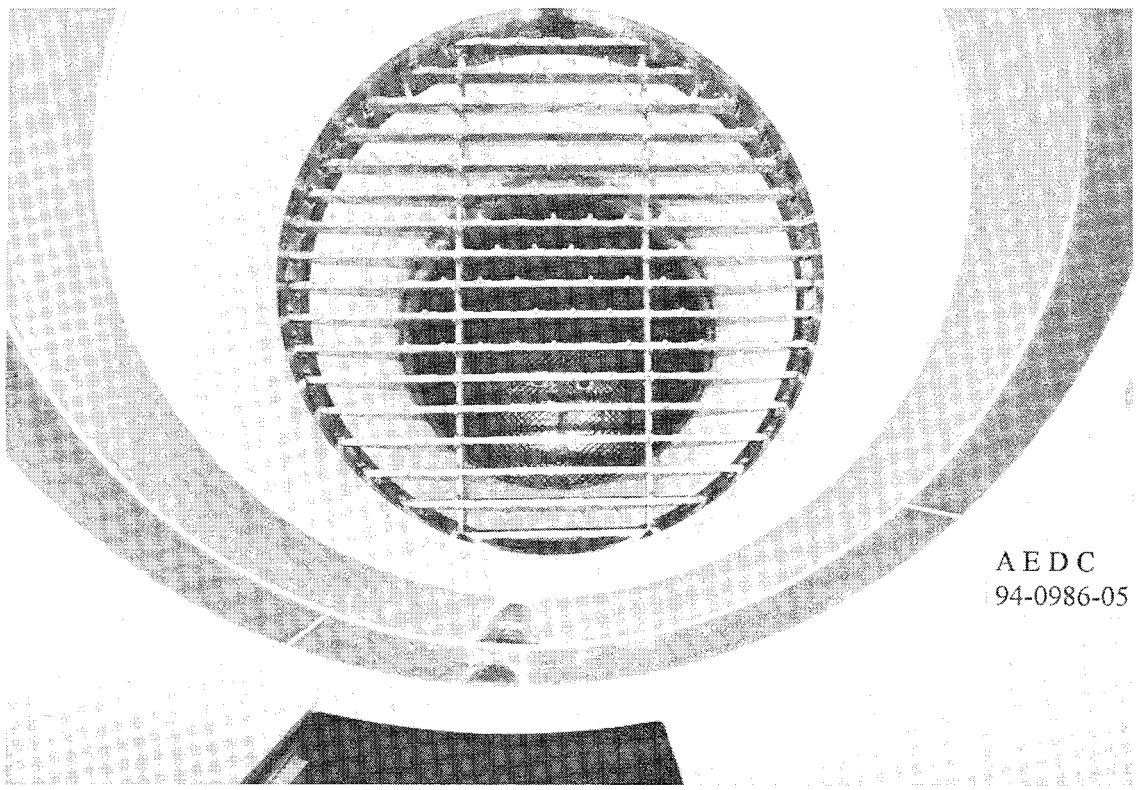

b. Photograph of spray bars and nozzle ports
Figure 10. Concluded.

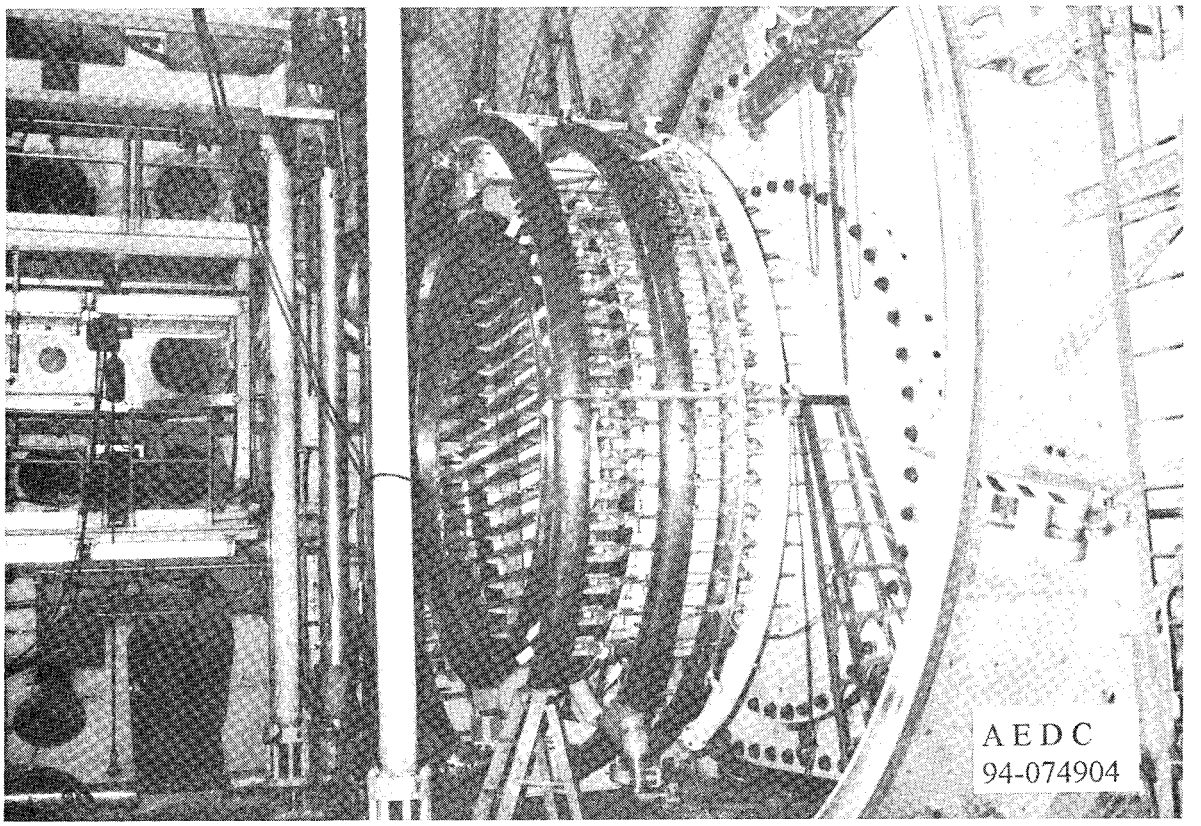

Figure 11. Photograph of the icing spray system installed in the ASTF.

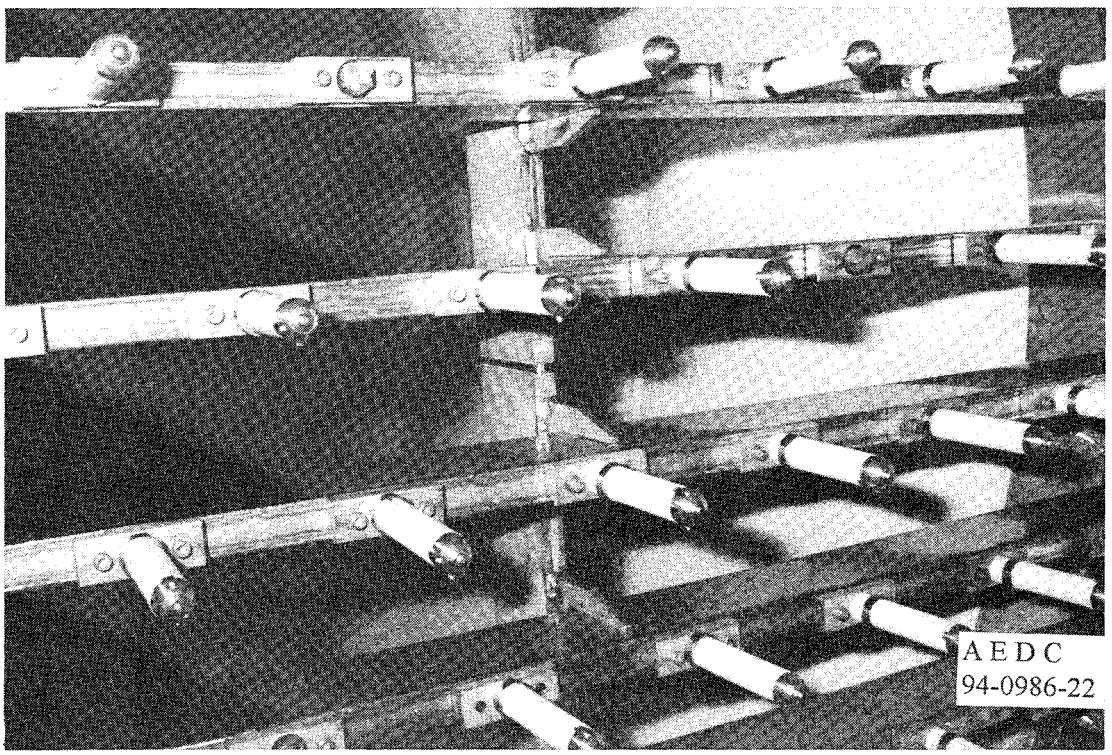

a. Photograph of spray nozzle extensions and spray nozzles
Figure 12. Icing spray bar section, nozzle extension, and spray nozzle view.

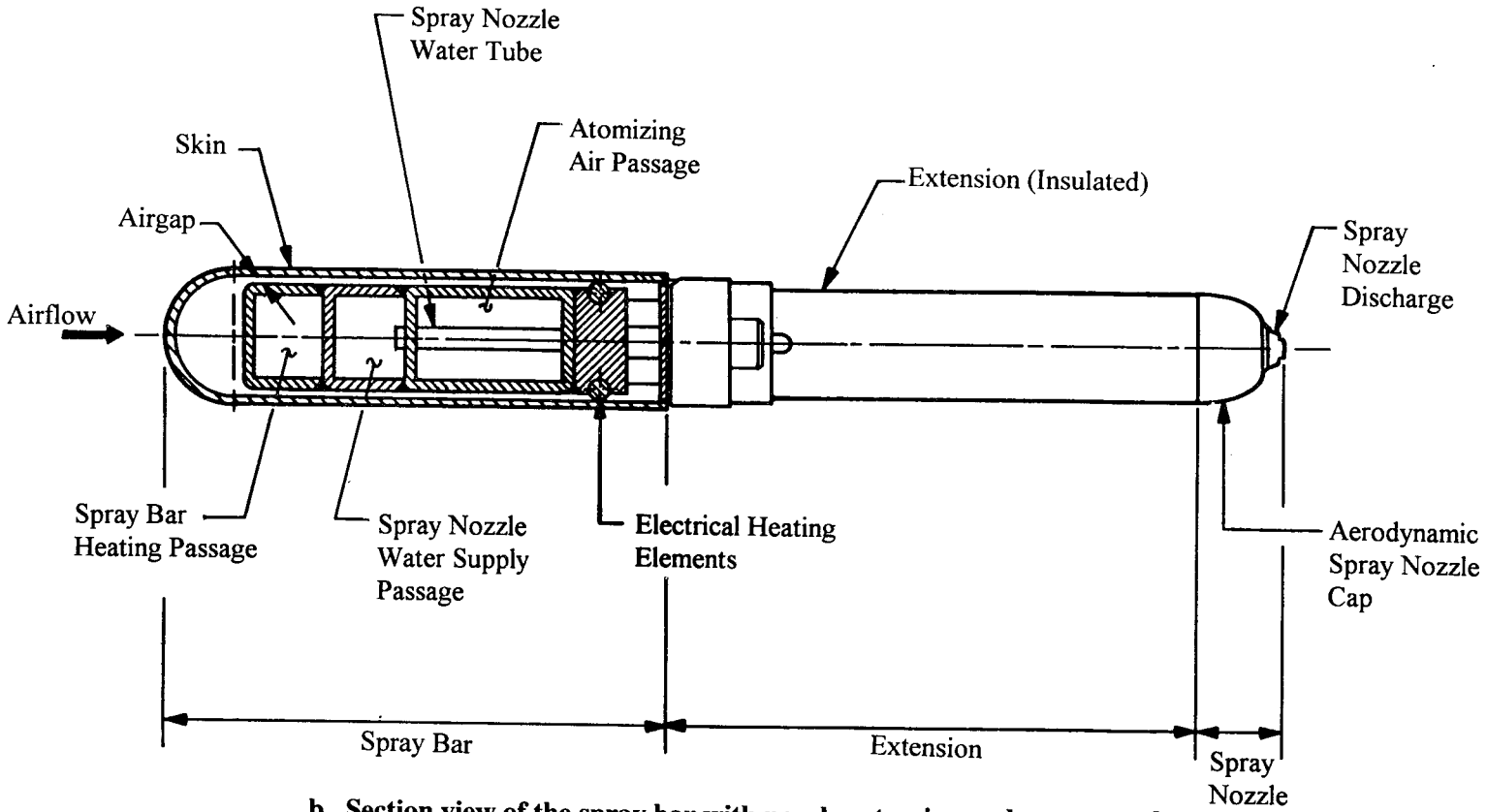

b. Section view of the spray bar with nozzle extension and spray nozzle
Figure 12. Concluded.

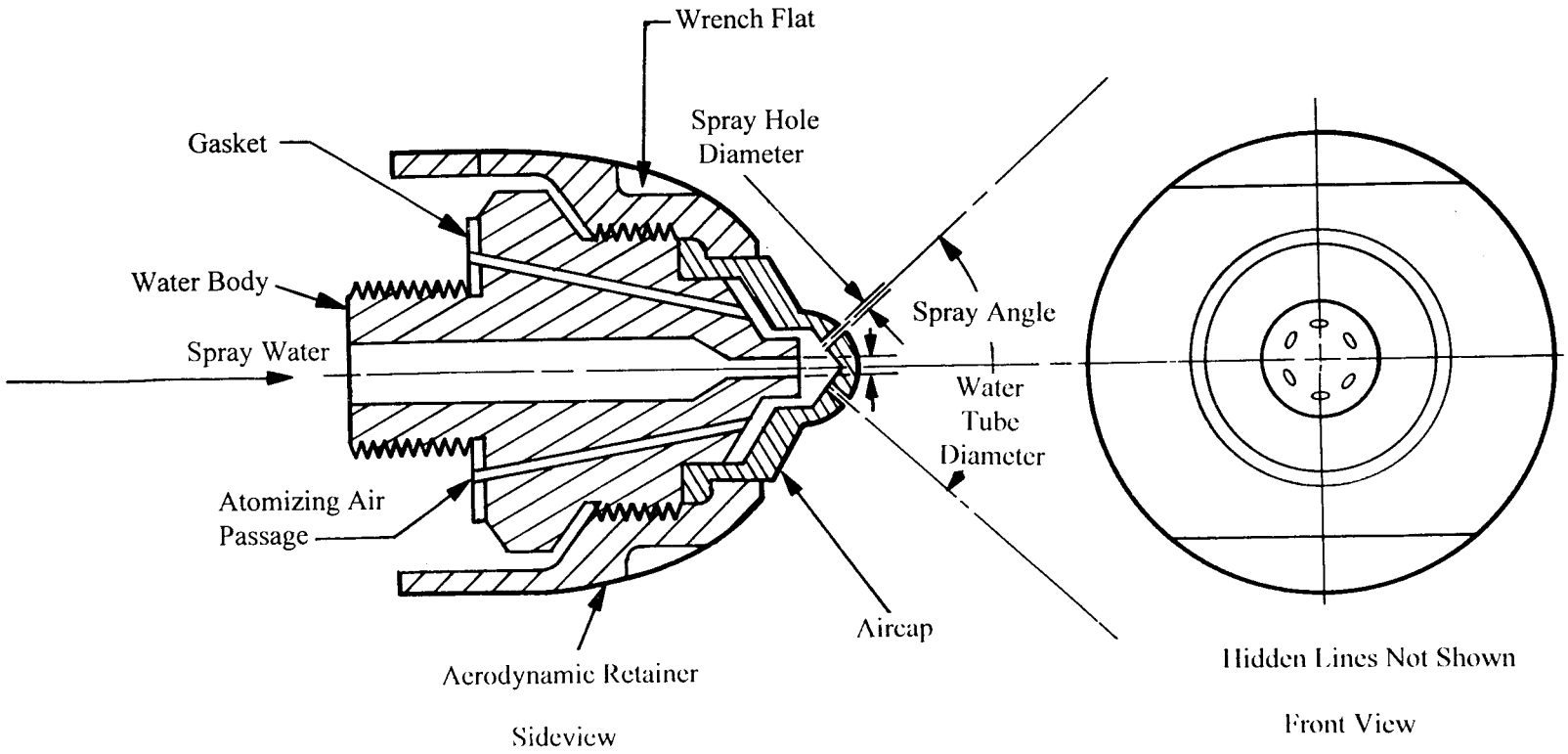

Figure 13. Air-assist icing spray nozzle cutaway view.

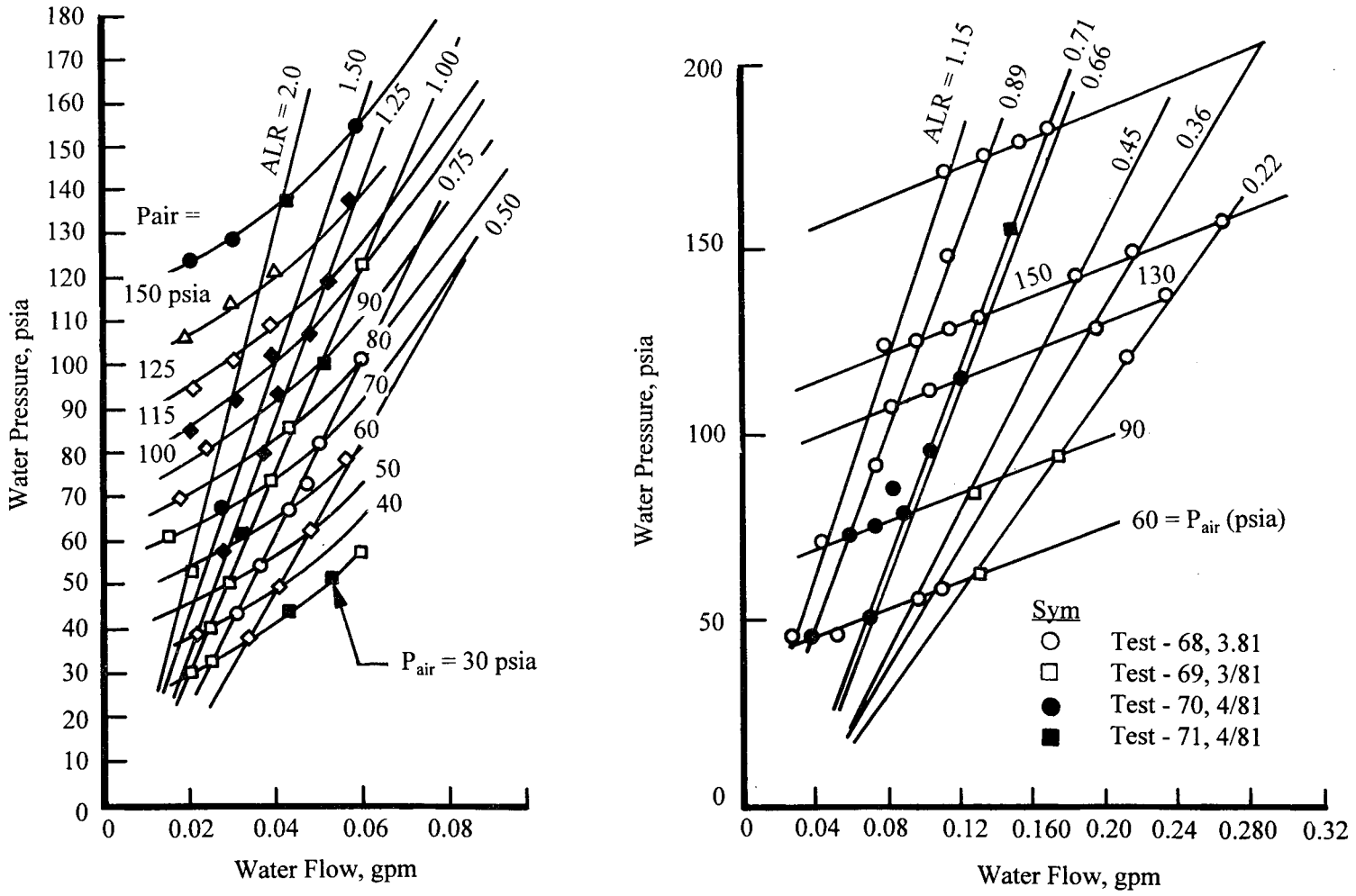

a. Low water flow rate spray nozzle

b. Higher water flow rate spray nozzle

Figure 14. Icing spray nozzle water flow, atomizing air, and water supply pressure relationships.

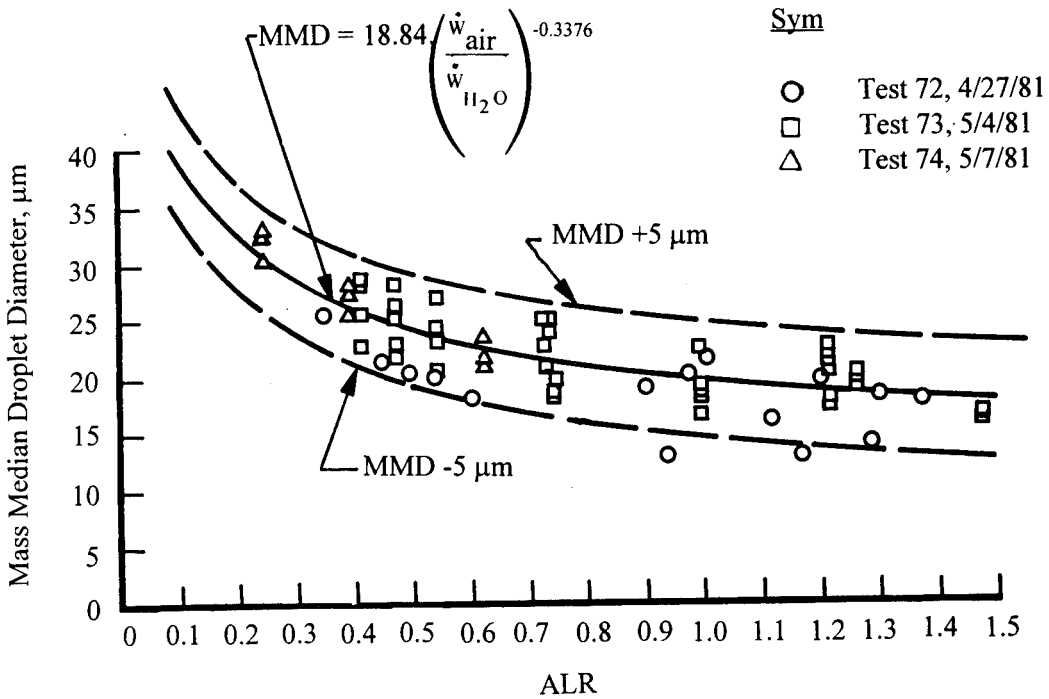

a. Low water flow rate spray nozzle

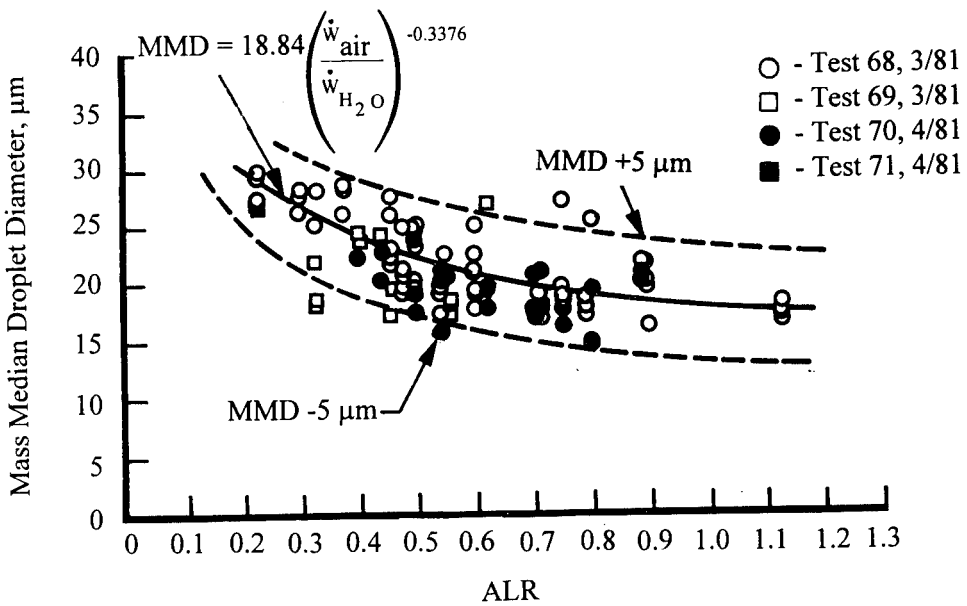

b. Higher water flow rate spray nozzle

Figure 15. Icing spray nozzle droplet mass median diameter production as a function of atomizing air-to-liquid mass flow rate ratio.

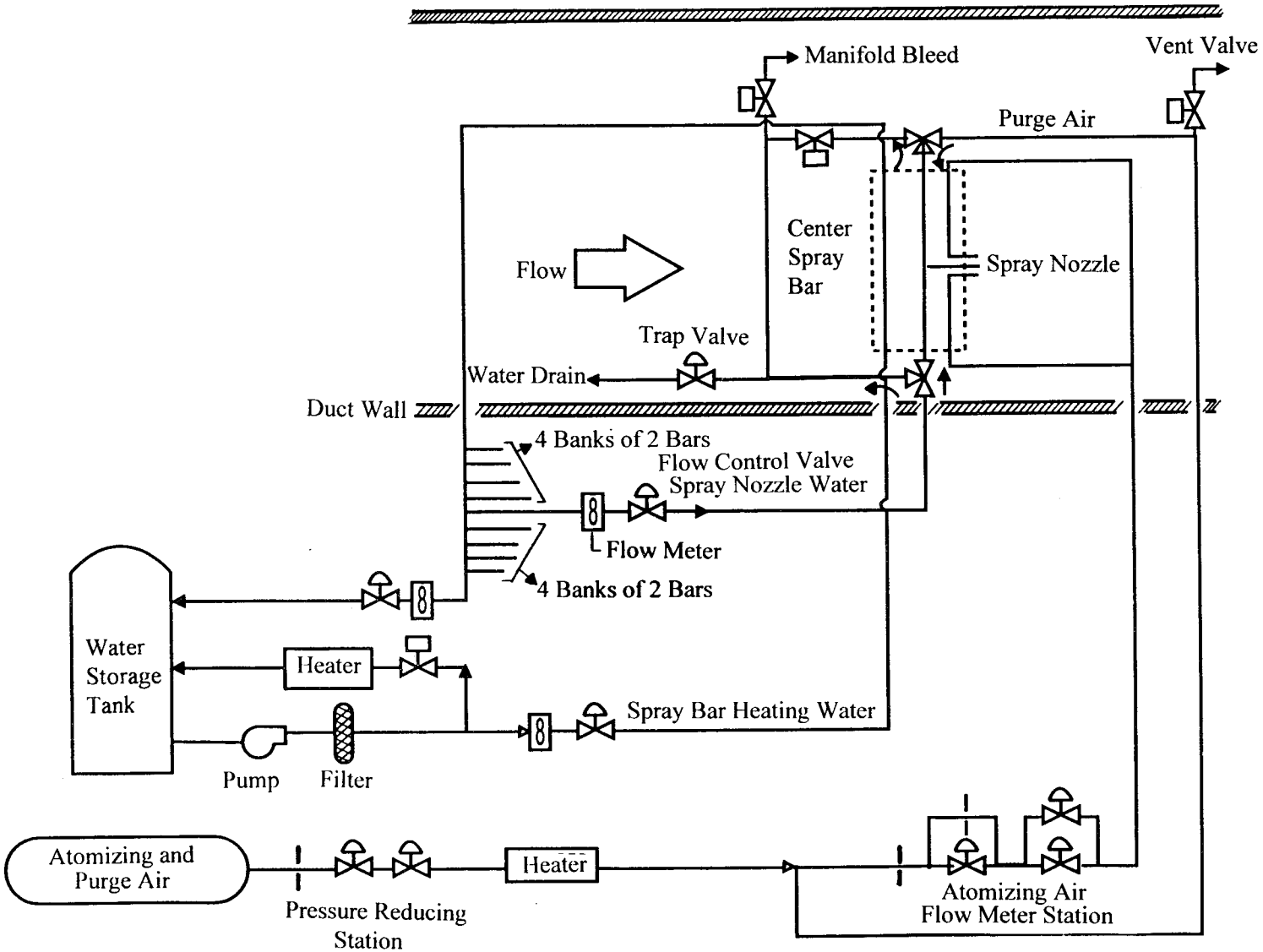

Figure 16. ASTF icing spray system water and air service system schematic.

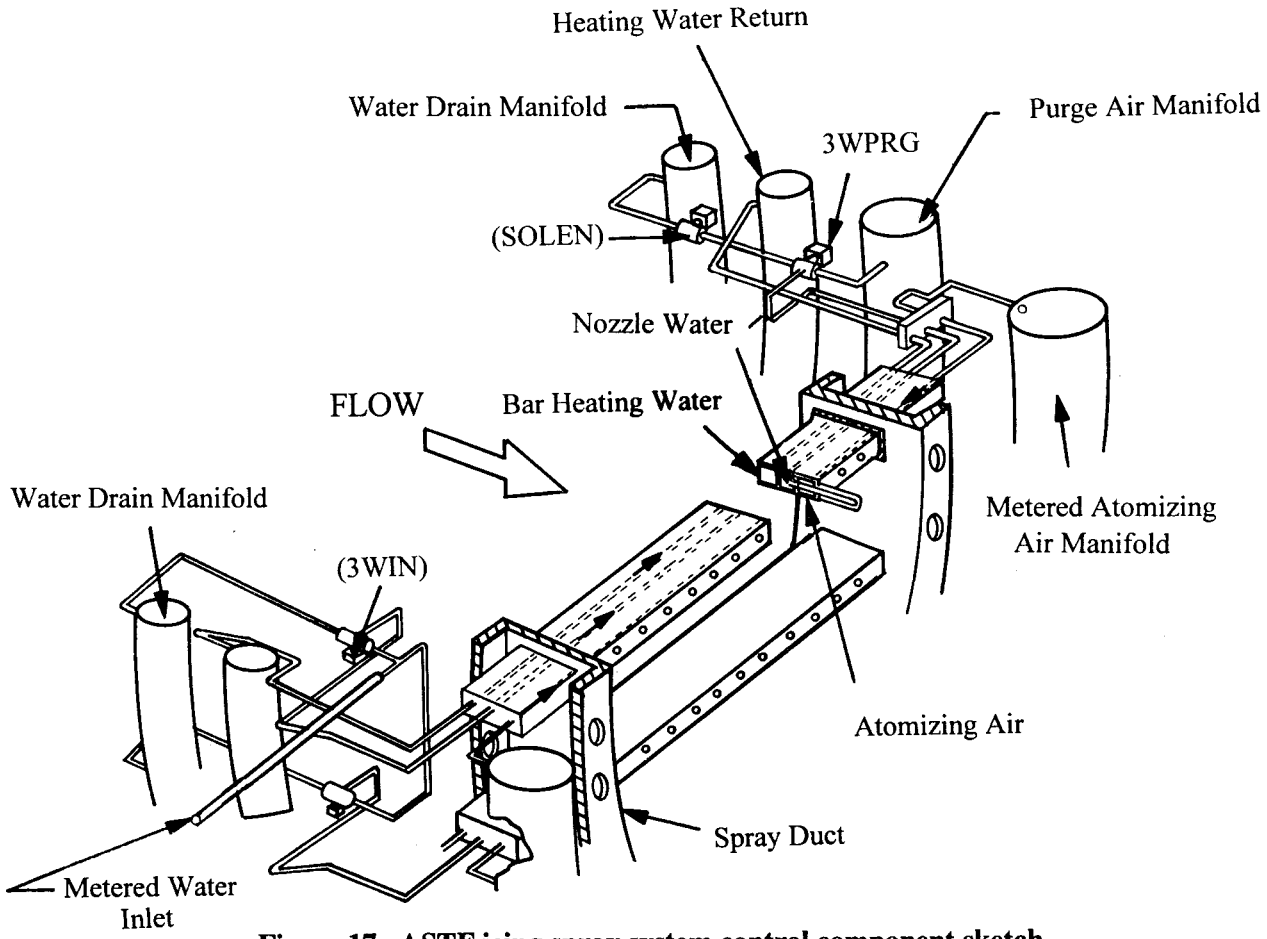

Figure 17. ASTF icing spray system control component sketch.

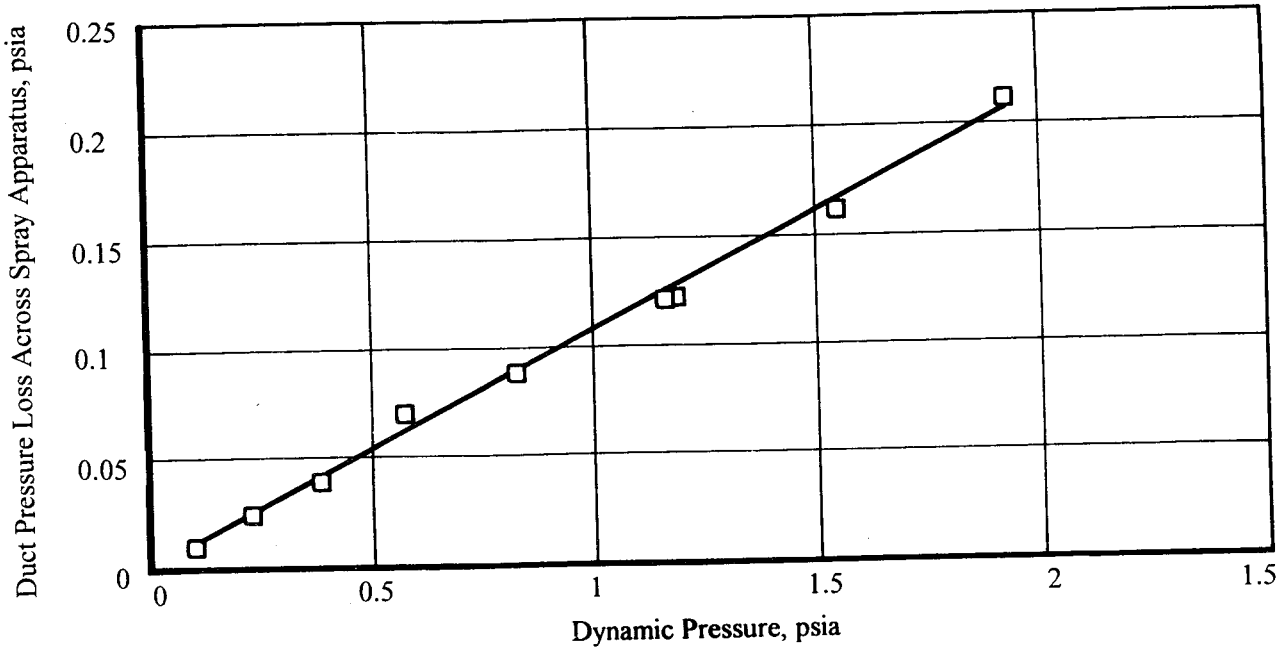

Figure 18. Spray system pressure loss characteristic.

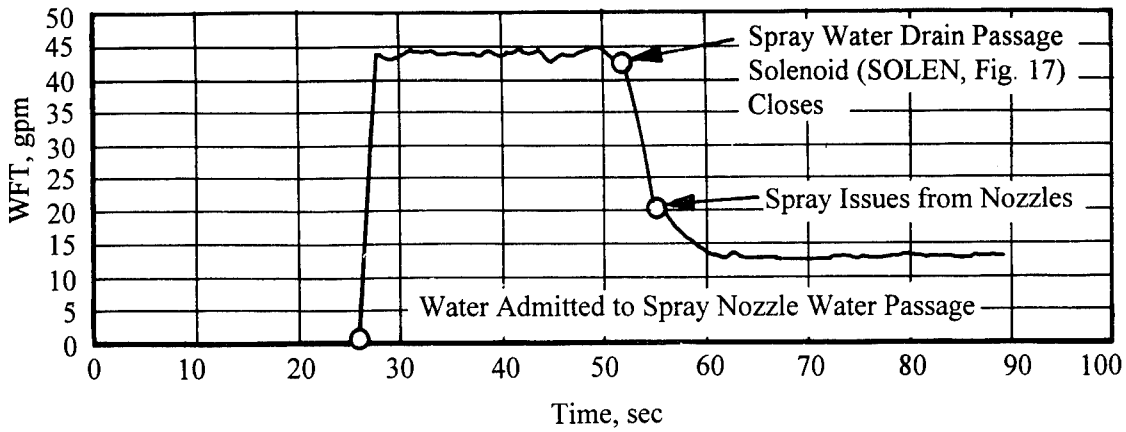

a. Water flow rate

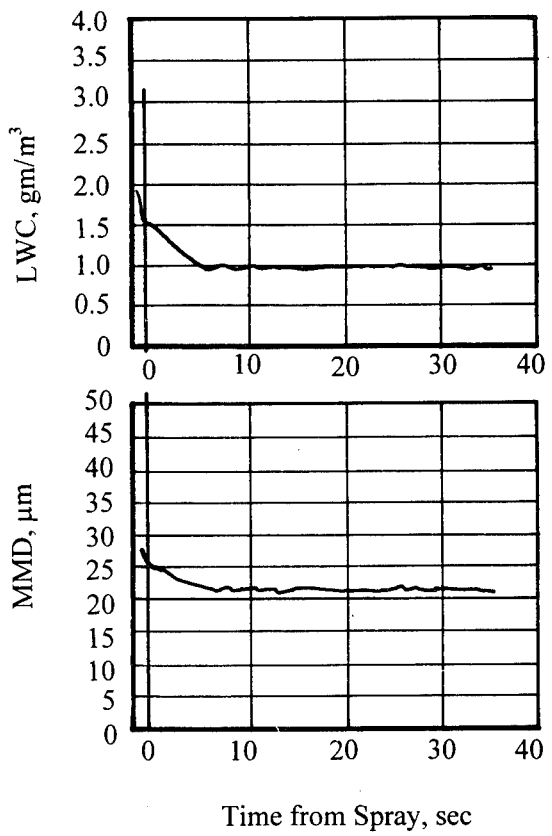

b. Liquid water content and droplet diameter traces
Figure 19. ASTF icing spray initiation.

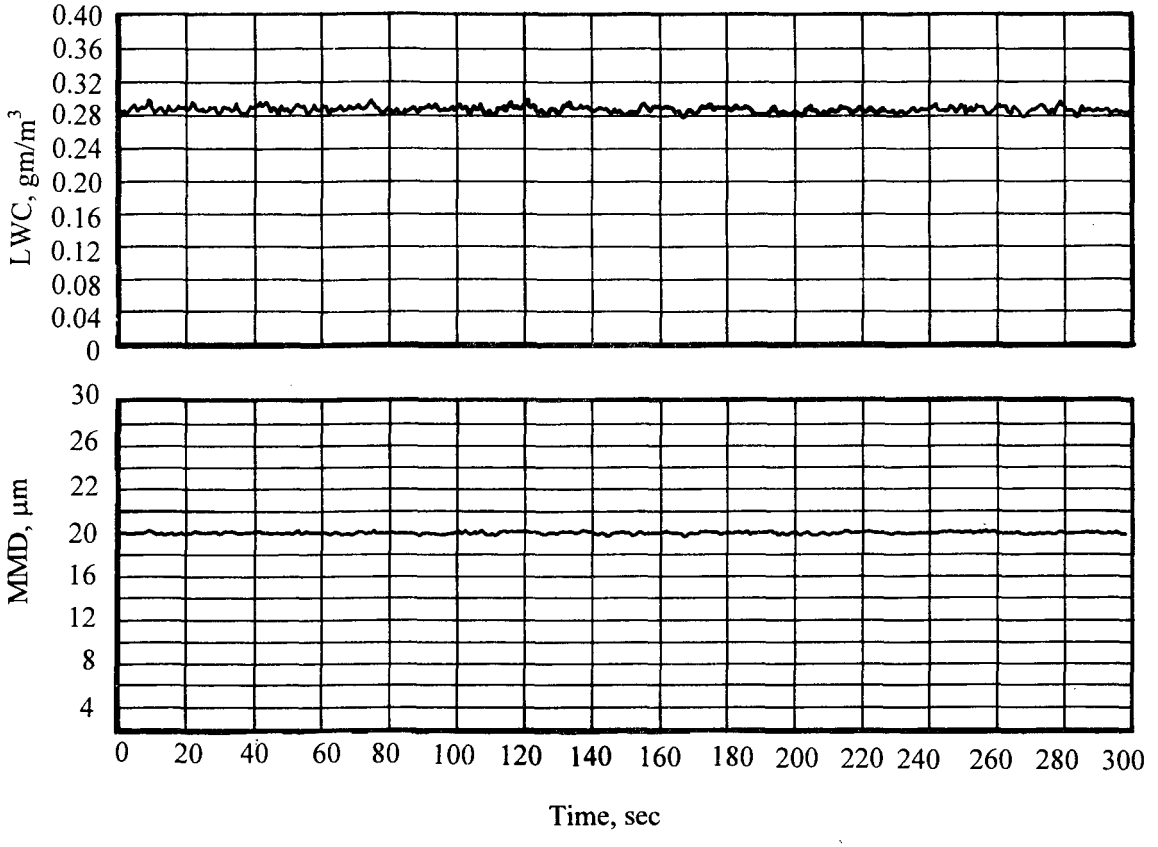

Figure 20. ASTF icing spray stabilization and termination liquid water content and droplet diameter traces.

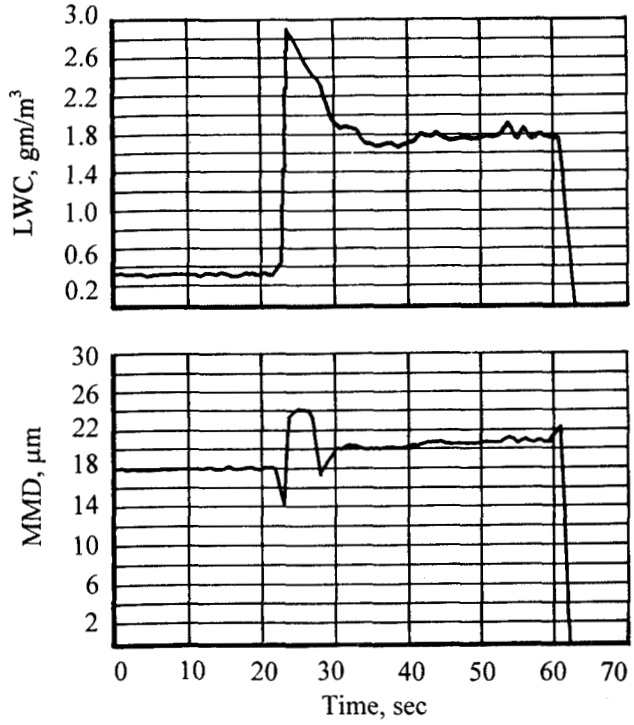

a. Stratiform to cumuliform cloud transition and cloud termination

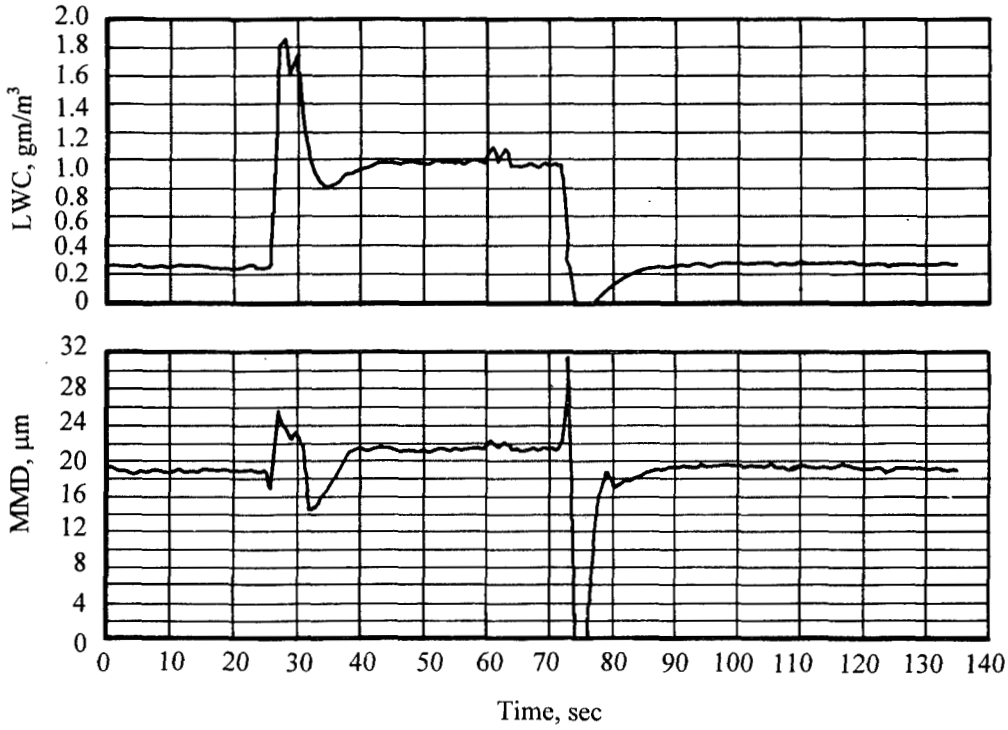

b. Stratiform to cumuliform to stratiform cloud transition

Figure 21. ASTF icing spray cycle between stratiform and cumuliform cloud liquid water content and droplet diameter traces.

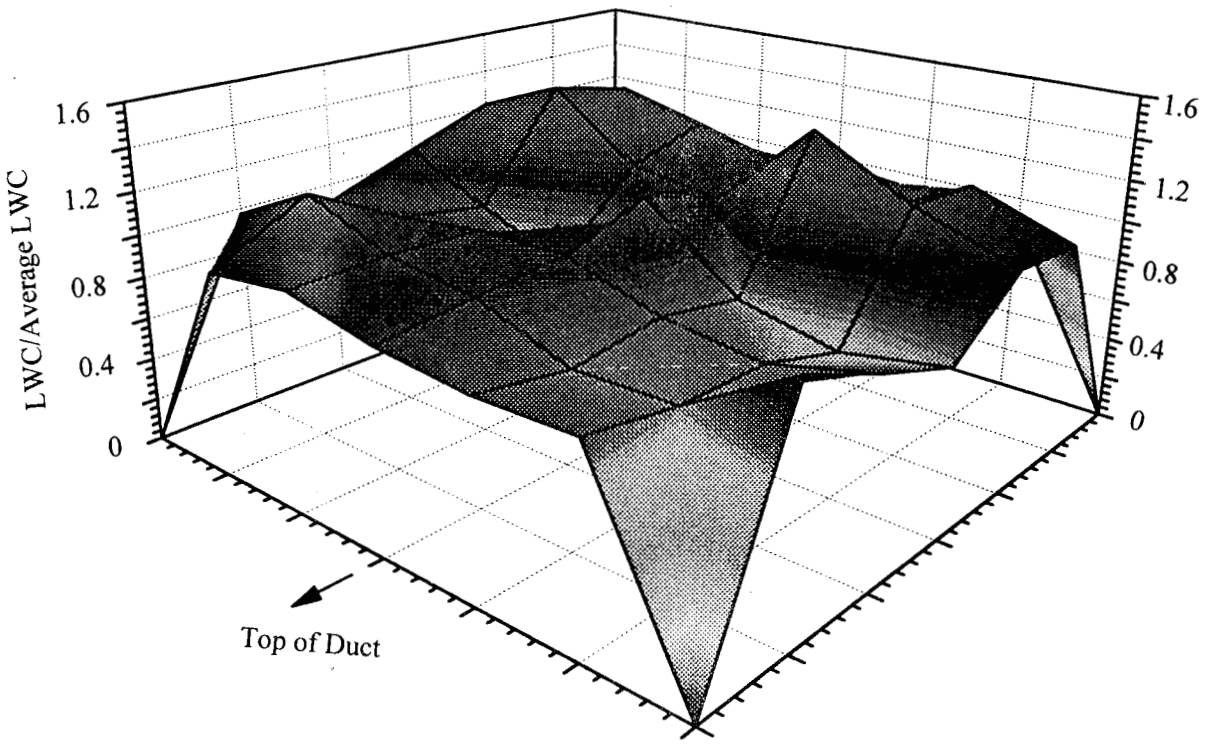

Figure 22. ASTF icing spray system ice thickness uniformity.

NOMENCLATURE

A	Area
AEDC	Arnold Engineering Development Center
ALR	Air-to-Liquid Ratio (Mass Flow Rate Ratio)
ASTF	Aeropropulsion System Test Facility
ETF	Engine Test Facility
gal	Gallons
lbm	Pounds mass
LWC	Liquid Water Content, gm/m^3
M	Mach Number, meters
min	Minute
μm	Micrometers, microns
MMD	Mass Median Diameter, microns
psia	Pounds per square inch absolute
WFT	Water Flow Rate Total, gal/min

Subscripts

∞	Free-stream Conditions
CF	Compressor Face
air	Atomizing Air