MASTER COPY KEEP THIS COPY FOR REPRODUCTION PURPOSES

REPORT DOCUMENTATION PAGE

Form Approved
OMB No. 0704-0188

Public reporting burden for this collection of information is estimated to average 1 hour per response, including the time for reviewing instructions, searching existing data sources, gathering and maintaining the data needed, and completing and reviewing the collection of information. Send comments regarding this burden estimate or any other aspect of this collection of information, including suggestions for reducing this burden, to Washington Headquarters Services, Directorate for Information Operations and Reports, 1215 Jefferson Davis Highway, Suite 1204, Arlington, VA 22202-4302, and to the Office of Management and Budget, Paperwork Reduction Project (0704-0188), Washington, DC 20503.

1. AGENCY USE ONLY (Leave blank)

2. REPORT DATE: 2/27/95

3. REPORT TYPE AND DATES COVERED: FINAL, 9/91-11/94

4. TITLE AND SUBTITLE: Localization in tungsten heavy alloys subjected to shearing deformations under superimposed high pressures

5. FUNDING NUMBERS: DAAL03-91-G-0079

6. AUTHOR(S)

K.T. Ramesh, Associate Professor

7. PERFORMING ORGANIZATION NAME(S) AND ADDRESS(ES)

The Johns Hopkins University
3400 N. Charles Street
Baltimore, Md 21218

8. PERFORMING ORGANIZATION REPORT NUMBER

DTIC ELECTE MAR 13 1995 S B D

9. SPONSORING/MONITORING AGENCY NAME(S) AND ADDRESS(ES)

U.S. Army Research Office
P.O. Box 12211
Research Triangle Park, NC 27709-2211

10. SPONSORING/MONITORING AGENCY REPORT NUMBER: ARO 28272.10-MS

11. SUPPLEMENTARY NOTES

The views, opinions and/or findings contained in this report are those of the author(s) and should not be construed as an official Department of the Army position, policy, or decision, unless so designated by other documentation.

12a. DISTRIBUTION/AVAILABILITY STATEMENT

Approved for public release; distribution unlimited.

12b. DISTRIBUTION CODE

13. ABSTRACT (Maximum 200 words)

This report presents the results of investigations into the deformation and failure of tungsten-based composites (tungsten heavy alloys) at very high strain rates. Several new experimental techniques developed during the course of the work include pressure-shear recovery, allowing the recovery of samples subjected to high-rate shearing deformations; the dynamic measurement of radial strains, and the continuous measurement of projectile velocities. The experimental results showed that the development of adiabatic shear localization in tungsten heavy alloys is influenced by a superimposed hydrostatic pressure. Experimental characterizations have been performed of the very high-rate response of tungsten composites with tungsten-nickel-iron and hafnium matrices. It has been shown that these materials must be treated as dual-phase composites. The addition of a hard particulate reinforcement is shown to result in a substantial increase in matrix rate-sensitivity in a model metal-matrix composite. A simple modeling approach has been developed that allows one to predict the dynamic mechanical properties of a particle-reinforced metal-matrix composite given only the properties of the matrix phase.

14. SUBJECT TERMS

15. NUMBER OF PAGES: 19

16. PRICE CODE

17. SECURITY CLASSIFICATION OF REPORT: UNCLASSIFIED

18. SECURITY CLASSIFICATION OF THIS PAGE: UNCLASSIFIED

19. SECURITY CLASSIFICATION OF ABSTRACT: UNCLASSIFIED

20. LIMITATION OF ABSTRACT: UL

19950308 040

Localization in Tungsten Heavy Alloys Subjected to Shearing Deformations under Superimposed Hydrostatic Pressures

Final Report

K.T. Ramesh

January 15, 1995

U.S. Army Research Office

Award No. DAAL03-91-G-0079

Department of Mechanical Engineering

The Johns Hopkins University

Baltimore, MD

APPROVED FOR PUBLIC RELEASE: DISTRIBUTION UNLIMITED

Table of Contents

1.0 Introduction and Background 3

2.0 Background 3

3.0 Statement of Problem 4

4.0 Summary of Technical Results 5

4.1 Result I: Pressure-Shear Recovery — A New Technique 5

4.2 Result II: Shear Localization and Damage in Tungsten Heavy Alloys 7

4.3 Result III: Ultra-High-Rate Behavior of Tungsten-Based Composites 9

4.4 Result IV: High-Strain Rate Behavior of Metal-Matrix Composites 12

4.5 Result V: A Technique for the Dynamic Measurement of Radial Strains 16

4.6 Result VI: A Technique for the Continuous Measurement of Projectile Velocity 16

5.0 Educational Mission 16

6.0 Resulting List of Publications 17

7.0 List of Scientific Personnel 18

8.0 References 18

Accession For
NTIS GRA&I ☑
DTIC TAB ☐
Unannounced ☐
Justification
By
Distribution
Availability Codes
Dist | Avail and/or Special
A-1

1.0 Introduction and Background

Kinetic energy penetrators must be made of materials that have very high densities as well as high strengths and substantial ductility in order to accommodate the rigors of launch and penetration. The materials that are currently most effective in these applications are depleted uranium (DU) alloys; the most common such alloy contains 0.75% Ti. While this material is extremely effective within long-rod kinetic energy penetrators, it presents major environmental problems in all phases of application (ranging from processing through battle-field cleanup). The increasing global sensitivity to environmental issues has resulted in a concerted search for alternatives to DU that have comparable penetrator performance.

In the past, a major effort has focused on tungsten "heavy alloys" (WHAs) as alternative materials since they can have comparable densities. Traditional tungsten heavy alloys are made by liquid-phase-sintering and contain large volume fractions of spheroidal bcc tungsten particles in an fcc W-Ni-Fe matrix. Cold-working the sintered tungsten heavy alloys by swaging results in quasistatic strengths that approach those of DU. Considerable effort has been expended in recent years to make tungsten heavy alloys with densities and quasistatic strengths comparable to those of DU.

However, kinetic energy penetrators made of these tungsten heavy alloys show relatively poor performance, substantially lower than that of DU. There is little or no correlation between the quasistatic strength of a tungsten heavy alloy and its performance as a penetrator material. This is because penetrator materials are subjected to extremely high strain rates (of the order of 10^5-10^6 s^{-1}) and high pressures (of the order of 2-6 GPa) during the penetration process (Magness, 1992). One expects that the high-strain-rate mechanical properties of penetrator materials are substantially different from the quasistatic properties, and the high-rate properties would be the discriminating properties for penetrator materials. Even more important, the failure mechanisms that are operative during dynamic loadings are quite different from those under quasistatic loadings. Since the penetration process involves effective erosion of the penetrator, these dynamic failure mechanisms (such as adiabatic shear localization) must also be understood for penetrator materials.

In light of these issues, renewed efforts have been initiated to produce improved penetrator materials with improved mechanical properties at high strain rates, and to characterize the dynamic failure mechanisms within these new materials. The first step towards a better understanding of penetration performance is the determination of the mechanical behavior and failure of tungsten heavy alloys under dynamic loading.

2.0 Background

There is a considerable body of literature on the quasi-static mechanical behavior of W-Ni-Fe composites (e.g., Krock & Shepard (1963), Ekbom (1981)). It has been observed that the flow strength of these composites increases with increasing tungsten content (e.g., Rabin & German (1988) O'Donnell & Woodward (1992) and with increasing swaging (e.g., Srikanth & Upadhyaya (1988)). Several studies have attempted to relate observed macroscopic behavior with microstructural information (e.g. Woodward et al. (1986) Bourguignon & German (1988) Couque, Lankford and coworkers (1989, 1988)). Several investigators have distinguished between the behavior of the tungsten grains and that of the matrix (e.g. Ekbom, 1981; Coates & Ramesh, 1991; Ramesh & Coates, 1992).

2.1 High-Strain-Rate Behavior

Studies of the dynamic mechanical behavior have revealed that the W-Ni-Fe tungsten-based composites are rate-sensitive (e.g. Meyer et al. (1985), Johnson et al. (1983), and Coates & Ramesh (1991)). The sensitivity of the dynamic properties to two microstructural parameters (tungsten content and grain size) and one thermomechanical parameter (the degree of swaging) has been investigated by Ramesh and Coates (1991, 1992) The rate sensitivity increases with increasing tungsten content; for a material containing 97%W, the rate sensitivity was observed to be very similar to that of pure polycrystalline tungsten. Thus it appears that the rate-sensitivity of the swaged W-Ni-Fe composites is primarily a result of the rate-sensitivity of the tungsten grains. The dynamic stress-strain behavior of the swaged materials shows very low levels of strain hardening for swaging levels above 10% (Ramesh & Coates, 1992). Thus a swaged W-Ni-Fe composite containing a high weight percentage of tungsten has an overall behavior involving relatively low strain hardening but strong rate-sensitivity.

2.2 Dynamic Failure Mechanisms

Observations of the failure of W-Ni-Fe composites in quasistatic tension are consistent with a mechanism in which microcrack initiation occurs at tungsten-tungsten grain boundaries (Rabin & German, 1988, Bourguignon & German, 1988). However, the loading conditions during penetration consist essentially of shearing under pressure, and it is the dynamic failure mechanism under these conditions that is of interest. There are extremely few observations of the failure mode of tungsten-based composites in shear, and even fewer observations of the failure mode under combined shear and pressure.

3.0 Statement of Problem

The primary objective of the grant was the study of the localization of shearing deformations within tungsten heavy alloys by developing the new experimental technique of pressure-shear recovery. The specific problems that were to be addressed included:

- The development of an experimental technique that allows for the recovery of a specimen that has been subjected to very high pressures and very high shear rates.
- The investigation of the development of shear bands within tungsten heavy alloys under conditions of high overall shear rates and high pressures.

A powerful new technique, pressure-shear recovery, has been developed in order to address the first issue above. In addressing the second issue, it was noted that the fact that the material is a dual-phase composite is crucial to its behavior. Substantial effort was therefore focused on the dynamic deformation and failure of dual-phase composites. We begin by describing the new experimental technique that we have developed; we then present the results of our shear localization studies on tungsten heavy alloys and then go on to present our results on the dynamic deformation and failure of dual-phase composites.

4.0 Summary of Technical Results

4.1 Result I: Pressure-Shear Recovery — A New Technique

4.1.1 Experimental Technique

A novel experimental technique, pressure-shear recovery, has been developed by the Principal Investigator. The intent is to recover the specimen intact after it has been subjected to a single simple shearing pulse (with superimposed compression). A schematic of the experiment is shown in Fig. 1.

A "flyer" moving at a velocity V_0 and inclined at an angle θ relative to its direction of motion impacts a parallel, stationary target within an evacuated chamber. The flyer consists of two hard plates that sandwich a very thin lubricant layer. This thin layer constitutes a shear trap, and is characterized by a shear strength that is proportional to the applied pressure. The target is a thin plate of the material to be tested, backed by an impedance matched momentum trap. All the hard plates remain elastic under the impact. Impact occurs on the specimen; the waves transmitted through the specimen are monitored at the rear surface of the momentum trap. The rear surface of the target carries a diffraction grating deposited using a photoresist technique. Particle velocity normal to the rear surface and particle displacement transverse to the rear surface are measured at the same point using a combined Normal Velocity Interferometer (NVI) and Transverse Displacement Interferometer (TDI). Interferometer fringes are sensed by photodiodes and recorded using high-speed digitizing oscilloscopes.

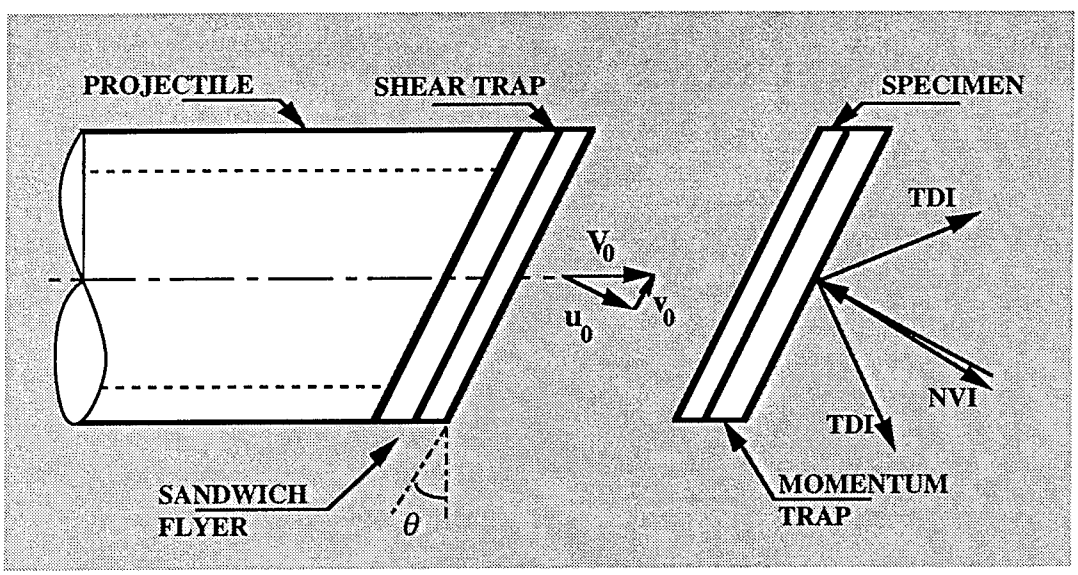

Fig. 1 Schematic Configuration for Pressure-Shear Recovery Experiments

When impact occurs, normal and transverse components of the projectile velocity are imposed on the impact face of the specimen (Fig. 2). Correspondingly, longitudinal and transverse waves are generated that propagate into the specimen and back into the flyer. The compressive wave in the flyer arrives at the shear trap and propagates through to the flyer rearplate. The transverse wave in the flyer arrives at the shear trap after it has

been placed under compression, and since the interface sustains shear stresses while under compression, the transverse wave also propagates through to the flyer rearplate.

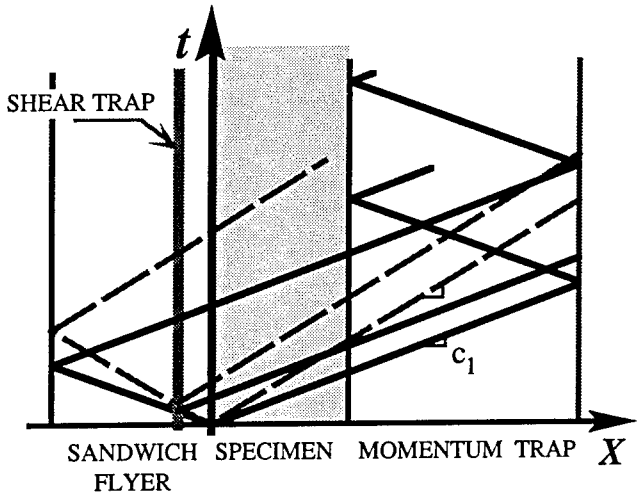

Fig. 2 Wave Propagation in the Pressure-Shear Recovery Experiment

At a later time the longitudinal pulse reflects from the free rear surface of the flyer and unloads the normal stresses at the shear trap; the entire compressive pulse propagates into the momentum trap. However, the shear trap now carries no compressive stresses, and is therefore incapable of sustaining shear stresses. Shear unloading immediately occurs at the shear trap and subsequently in the specimen, and the shear pulse propagates towards the specimen-momentum trap interface. The compressive pulse in the momentum trap returns as a tensile pulse, and the momentum trap separates from the assembly. At separation the momentum trap contains the shear wave as well, and so the specimen is not subjected to any additional compressive or shear loadings. We are therefore able to recover the specimen intact after it has been subjected to a single shearing deformation.

4.1.2 Results and Discussion

Several variants of the pressure-shear recovery technique have been developed and implemented by the Principal Investigator. Broadly, they fall into two classes:

- The most general version, represented by Figs. 1 and 2 above, is used for studies of residual deformations in specimens subjected to a single shear pulse, analogous to the normal plate impact recovery experiment for a single compressive pulse. In this case the specimen does not see homogeneous shearing deformations; rather, it sees the propagation of a compressive pulse followed by a transverse pulse. We are implementing this technique to examine single crystal specimens.
- A second version, in which the specimen is extremely thin and is backed by an anvil plate, results in the recovery of specimens that have been subjected to homogeneous ultra-high-rate shearing under a superimposed hydrostatic pressure. While we have implemented this technique successfully for the recovery of 6061-T6 aluminum, we have not as yet recovered tungsten specimens. The higher projectile velocities involved necessitated building a new energy absorption mechanism; this mechanism has been built and is being tested.

The new technique allows interpretation of the distribution of microstructural features of the deformation in terms of a single well-defined shear loading, either as a single transmitted transverse pulse or as a controlled homogeneous high-rate shearing without repeated impacts. The enormous potential of this new technique developed by the PI has resulted in its adoption by several other laboratories working in high-rate deformations and failure.

4.1.3 Conclusions: Pressure-Shear Recovery Development

- A new experimental technique, pressure-shear recovery, has been developed that is able to recover samples that have been subjected to single, well-defined shearing and compression loadings
- The experimental technique has been refined to include versions that examine (i) the development of microstructure and wave structure during passage of single shearing pulses and (ii) the micromechanisms associated with shearing within homogeneous high rate shearing deformations under pressure.

4.2 Result II: Shear Localization and Damage in Tungsten Heavy Alloys

This subsection contains a description of the results of our experiments on the development of shear localization in tungsten heavy alloys and of the effect of pressure on the susceptibility to adiabatic shearing.

4.2.1 Shear Localization in the Torsional Kolsky Bar

The torsional Kolsky bar was used to subject a W-Ni-Fe tungsten heavy alloy to initially homogeneous shearing deformations at high strain rates. Shear rates ranging from 10^2 to 3×10^3 s^{-1} can be attained using this approach. Adiabatic shear localization was observed in a 91%W, 25% swaged W-Ni-Fe alloy during torsional Kolsky bar tests conducted at high shear rates (the results are detailed in Ramesh , 1994). The localized shearing failures were accompanied by considerable microcracking in the tensile orientation in the regions of the material on either side of the shear band. Similar observations were made in a different W-Ni-Fe composite by Weerasooriya & Beaulieu (1992). Fig. 3(a) shows an optical micrograph of the surface of a torsion specimen that was subjected to shearing at a rate of 1.65×10^3 s^{-1}. Over a length scale of 200 microns the W grains show evidence of shear, which localizes into a band of extremely intense shearing. A closer examination of the material near the shear band using SEM results in the micrograph shown in Fig. 3(b). The shearing deformations are accompanied by the development of tensile cracks running at an angle of 45° to the shearing direction.

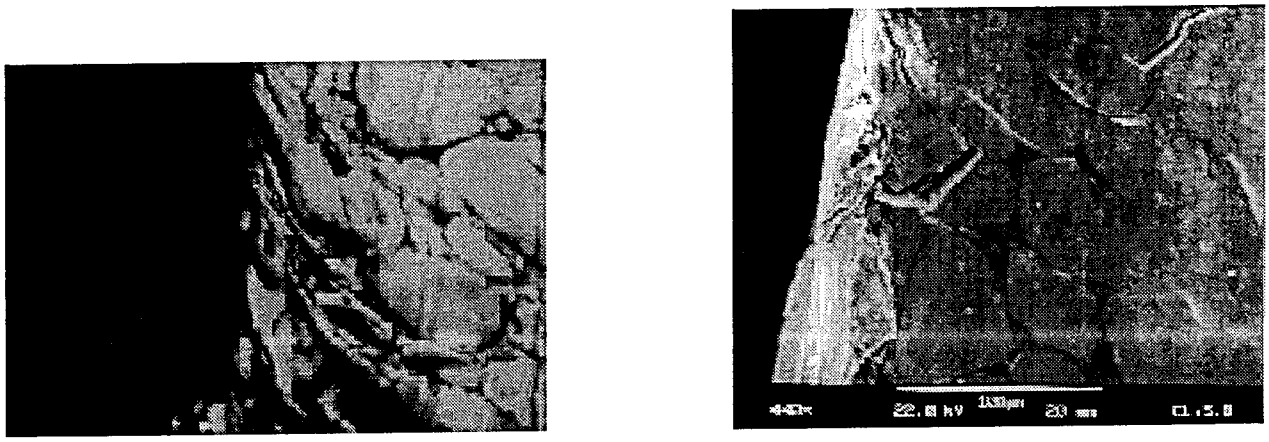

Fig. 3 Adiabatic shear localization and shearing damage in W-Ni-Fe tungsten heavy alloy

The tensile nature of the damage suggests this mechanism may be shut down under a state of superimposed hydrostatic pressure. The symmetric pressure-shear plate impact experiment can be used to study the influence of pressure on the shearing damage mechanism, using the approach described in the next section. The delayed onset of shear localization under pressure (Zhou et al. 1994) as compared to the simple shearing case (Ramesh, 1994) is a matter of considerable interest, since it is believed that ease of adiabatic shear localization is essential to improved penetrator performance (Magness, 1992).

4.2.2 The Effect of Pressure on Shearing Damage: Symmetric Pressure-Shear

In the symmetric pressure-shear configuration (Fig. 4) identical plates made of the tungsten heavy alloy are used for the target and flyer. The impact velocity is high enough to ensure that inelastic deformations are developed in both plates.

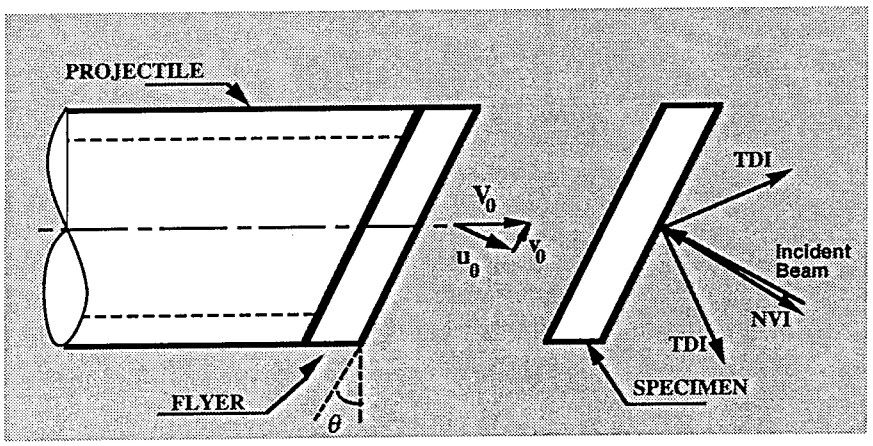

Fig. 4 Schematic Configuration for Symmetric Pressure-Shear Plate Impact

The impact generates two stress waves: a compression wave that propagates at a velocity c_1 and a shear wave that propagates at a velocity c_2. The wave propagation is shown on the time-distance (t—X) diagram of Fig. 5.

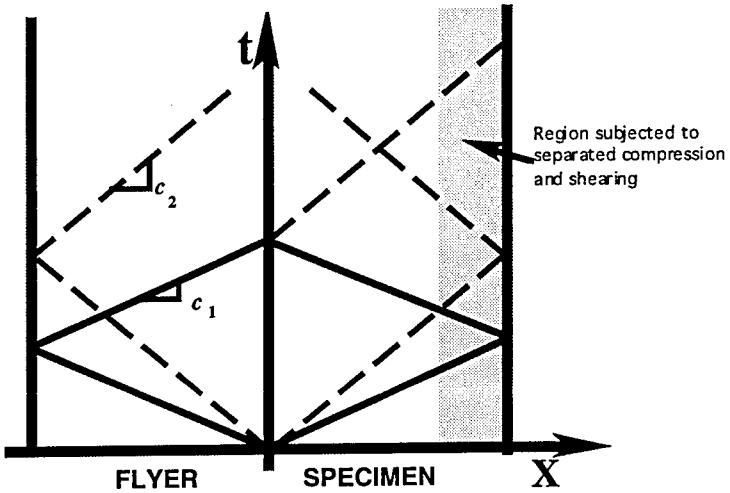

Fig. 5 Wave propagation in the symmetric pressure-shear plate impact experiment.

From Fig. 5, one observes that certain regions of the target are subjected to both compression and shearing at all times of interest, while other regions may be subjected to separated shearing and compression pulses. One can test the hypothesis that pressure will shut down the damage mechanism by examining the microstructural damage in the target plate.

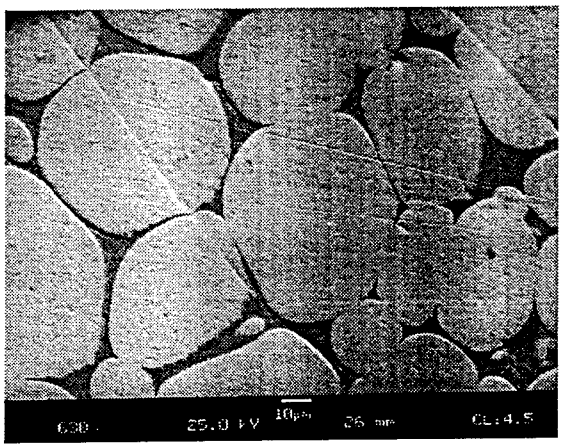

Fig. 6 Micrograph of region subjected to separated compression and shearing; note the tensile debonds (dark regions) at the grain-grain and grain-matrix interfaces.

Fig. 6 shows a micrograph obtained from a tungsten alloy sample recovered after a pressure-shear test. The region shown is one subjected to separated compression and shearing, and a high density of tensile debonds at 45° to the shearing direction are observed. The regions of the sample subjected to simultaneous pressure and shear show very few microcracks; thus it is evident that the pressure does in fact shut down this damage mechanism.

4.2.3 Conclusions: Shear Localization and Damage Experiments

- The results of the torsional Kolsky bar tests show that adiabatic shear localization develops relatively easily within W-Ni-Fe heavy alloys during high-rate shearing.
- Within the band itself the tungsten grains developed extremely large plastic deformations. Away from the shear band, the material accommodated the shearing by developing a number of tensile microcracks both within and between tungsten grains.
- Superimposed compressive stresses appear to shut down the damage mechanism that accommodates dynamic shearing in these materials.

4.3 Result III: Ultra-High-Rate Behavior of Tungsten-Based Composites

In addition to the W-Ni-Fe heavy alloy, we studied the high strain rate behavior of an advanced tungsten-based composite (WBC) containing 78% tungsten by weight, the remainder being hafnium (Hf) (these results are detailed in the paper by Yadav & Ramesh, 1994). Both materials were studied using a combination of compression Kolsky bar, torsion Kolsky bar, and high strain rate pressure-shear plate impact (described et seq).

4.3.1 High Strain Rate Pressure-Shear Plate Impact

The high strain rate pressure-shear (HSRPS) plate impact technique again involves the impact of plates that are flat and parallel but inclined relative to their direction of approach. The specimen consists of a very thin (of the order of 100-200 mm thick), very flat plate of the material under investigation. This thin specimen is bonded to a hard flyer plate and launched towards a stationary target plate (Fig. 7).

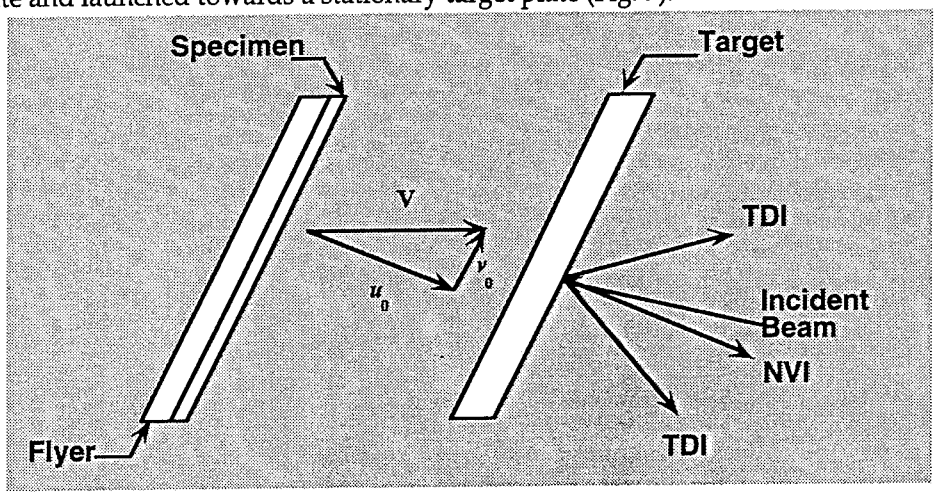

Fig. 7 Schematic of the High Strain Rate Pressure Shear plate impact experiment

At impact, plane longitudinal (compressive) and transverse (shear) waves are generated in the specimen and the target plate. Wave reverberations within the specimen result in the development of a homogeneous high-rate shearing deformation under high hydrostatic pressure. Information on the stress levels sustained by the specimen material is carried by the normal and transverse waves propagating into the target plate. Since the target remains elastic, it is sufficient to measure the normal and transverse particle velocities in the target plate to deduce the stress state and deformation state within the specimen. Measurements of the particle velocities at the free surface of the target plate are made using laser interferometry off a diffraction grating that is photo-deposited onto the rear surface. A detailed description of the experimental technique can be found in the paper by Yadav, Chichili & Ramesh (1994).

4.3.2 Results and Discussion

Fig. 8 presents typical shear stress–shear strain curves for the W-Hf composite obtained using HSRPS plate impact as well as a compression Kolsky bar (using J2-flow theory). A loss in the load bearing capacity was observed for the compression Kolsky bar tests at the lowest strain rate. An examination of the fracture surface revealed intercrystalline quasi-brittle fracture. The other compression specimens did not fail during the test, deforming up to true axial strains of more than 40%. It is hypothesized that the higher strain rates lead to enhanced thermal softening of the tungsten composite and thereby increase the apparent ductility. Microscopic examination showed extensive plastic deformation in the tungsten grains in the specimens deformed at the highest strain rates. However, localization of the deformations was not observed in the compression Kol-

sky bar specimens. The plate impact specimens were completely destroyed, crumbling into a powder that could not be recovered.

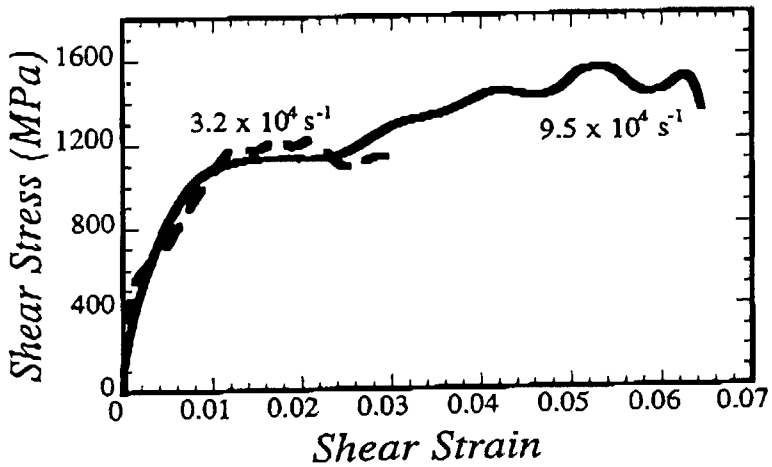

Fig. 8 Shear stress versus shear strain curves for a W-Hf composite obtained using high strain rate pressure-shear and compression Kolsky bar experiments

The flow stresses sustained by the two composites in shear (at a shear strain of 5%) are plotted in Fig. 9 as a function of the shear rate . The results also include the data of Horwath & Ramesh (1994) and Zurek et al. (1991) for pure W, and of Subhash & Ravichandran (1993) for pure Hf. It is observed that both the tungsten composites display the same degree of rate hardening. Further the W-Hf composite shows flow stress values comparable to the W-Ni-Fe composite, in spite of its lower tungsten content. Note also that the flow stresses sustained by the W-Ni-Fe composites obtained using the torsional bar are lower than the quasistatic flow stress in compression. This is due to the shearing damage developed in these composites during the torsional tests.

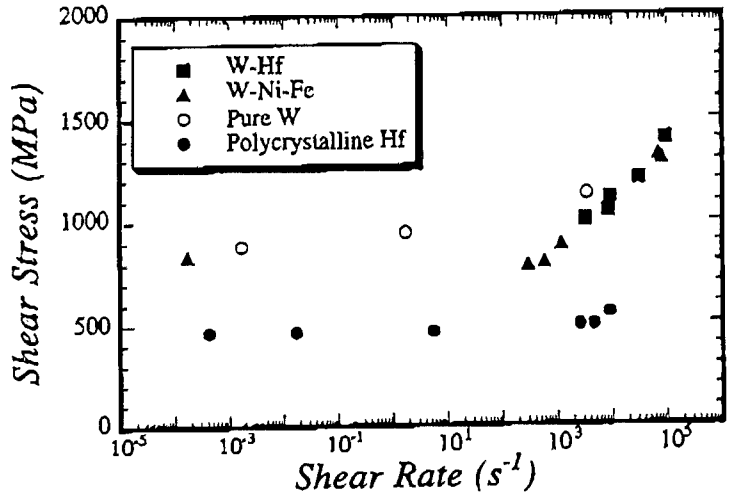

Fig. 9 Rate sensitivity diagram for WBC (W-Hf) and W-Ni-Fe heavy alloy. Data from quasistatic testing, compression Kolsky bar, torsional Kolsky bar, and high rate pressure-shear plate impact

4.3.3 Conclusions from Investigation of Advanced WBC

- In spite of its lower tungsten content and the residual porosity, the W-Hf composite has a flow strength comparable to that of W-Ni-Fe composites in high rate experiments.
- The W-Hf composite displays the same overall degree of rate sensitivity as the traditional W-Ni-Fe alloy, even though there is residual porosity in the material studied.
- Although the W-Hf composite displays some flow softening during high-rate compressive deformations, localized deformations have not been observed.
- Thus, our results suggest that the penetrator performance of the W-Hf composite should be no better than that of WHA. Recent ballistic performance tests by Magness have shown the accuracy of this prediction.

4.4 Result IV: High-Strain Rate Behavior of Metal-Matrix Composites

It is clear that modifications to the primary tungsten phase are necessary in order to design the advanced WBC penetrator material of the future. Such modifications require a fundamental understanding of the dynamic deformations of two-phase composites. We decided, therefore, to examine a model material system, a metal-matrix composite with a 6061-T6 Al matrix and an Al_2O_3 reinforcement phase. This section presents the results of that investigation (detailed results are presented by Yadav et al. (1994)). From these fundamental studies, we develop guidelines for design of a modified tungsten phase for use in advanced WBCs.

4.4.1 Experimental Techniques

The experimental techniques used were that of high strain rate pressure-shear (HSRPS) plate impact (described in the previous section) and compression, tension and torsion Kolsky bars. Hardened Carpenter D-3 steel plates were used for the flyer and the target plates. The model dual-phase composite chosen was Duralcan W6A-20A, which is a 6061-T6 aluminum matrix containing 20 vol. % of alumina particles. This material system was chosen because it has been fairly well studied in the quasistatic regime, because the materials processing routes are well established, and because a range of microstructures and volume fractions can be obtained. Comparison studies were also performed on unreinforced 6061-T6 aluminum specimens.

4.4.2 Experimental Results & Modeling

Examples of shear stress – shear strain curves obtained for the composite and the monolithic alloy using high strain rate pressure-shear plate impact are shown in Fig. 10. It is clear that the strengthening effect of the reinforcement continues even at very high strain rates.

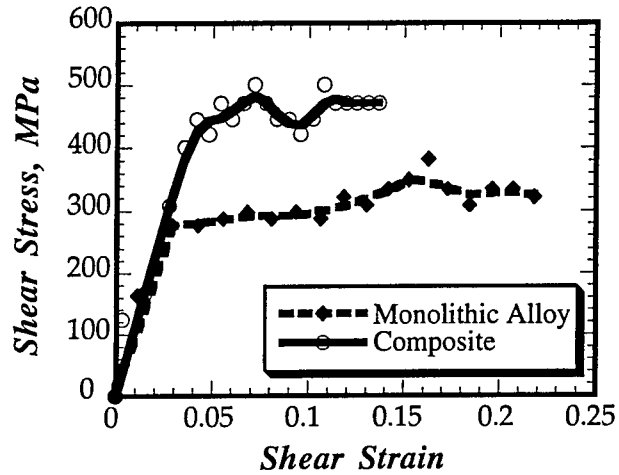

Fig. 10 Strengthening effect of reinforcement at very high strain rates (2×10^{-3})

Fig. 11 presents a comparison of the dynamic behaviors of the composite and the monolithic alloy in the form of a plot of the shear stress (measured at fixed strain) against the logarithm of the shear rate (a "rate-sensitivity diagram"). The composite is observed to be strongly rate sensitive at high strain rates. Of particular interest is the observation that the composite displays a higher rate sensitivity than the monolithic alloy at high rates. It appears that the addition of the hard reinforcement phase increases the effective rate sensitivity of the material.

The experimental results in Figs. 10 and 11 have been used to develop a theoretical model for the strengthening effect of the reinforcement for dynamic plastic deformations. The behavior of the matrix is assumed to follow a Ramberg-Osgood relationship:

$$\varepsilon = \frac{\sigma}{E} + \alpha\varepsilon_0\left(\frac{\sigma}{\sigma_0}\right)^n \tag{1}$$

where the parameters α and n are evaluated by fitting the experimental data on the monolithic alloy, E is the (known) Young's modulus, σ_0 is the (known) quasistatic yield strength, and $\varepsilon_0 = \frac{\sigma_0}{E}$. Given the matrix behavior, the finite element cell model results of Bao et al. (1991) were quite closely approximated by a similar Ramberg-Osgood representation for the plastic response of the composite:

$$\bar{\varepsilon} = \frac{\bar{\sigma}}{E} + \alpha\varepsilon_0\left(\frac{\bar{\sigma}}{\bar{\sigma}_N}\right)^n \tag{2}$$

where E is the (known) Young's modulus for the composite, the parameters α and n are identical with those of the matrix from eqn. (1), and $\bar{\sigma}_N$ is the "asymptotic reference stress" for the composite. Evans et al. (1991) provide an approximate relation for the evaluation of the asymptotic reference stress:

$$\bar{\sigma}_N = \bar{\sigma}_0 + c\,(1/n)\,(\bar{\sigma}_0 - \sigma_0) \tag{3}$$

where $\bar{\sigma}_0$ is the equivalent to the asymptotic reference stress obtained in the case of a perfectly-plastic matrix, and c is a constant. $\bar{\sigma}_0$ itself can be obtained approximately [8] in terms of the volume fraction f of the reinforcing phase:

$$\bar{\sigma}_0 = \sigma_0\,(1 + \beta f) \tag{4}$$

where β is a constant that must be obtained from the full finite element computations. Approximating the particles as spherical, and using Evans et al. (1991), we obtain $\beta = 0.4$ and $c = 4$. Equation (2) can now be used to predict the behavior of the composite.

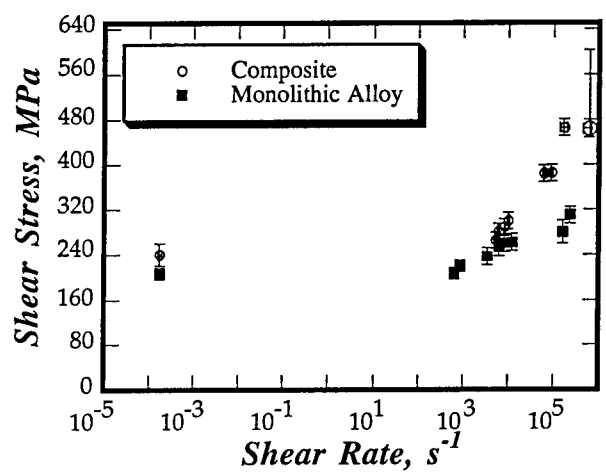

Fig. 11 Rate sensitivity diagram for metal-matrix composite & unreinforced matrix. Data from quasi-static testing, compression Kolsky bar, torsional Kolsky bar, & high rate pressure-shear plate impact

While the model (the set of equations 1-4) works very well for quasistatic deformations, it is unable to account for the rate-sensitivity of the material properties. However, the approach of the model can be extended to also examine the rate-sensitive problem as follows. Given the rate-sensitive behavior of the matrix material from experiment (Fig. 11), the rate dependence of the flow stress of the matrix can be characterized as

$$\sigma_f = g\,(\dot{\varepsilon}) \tag{5}$$

where $g\,(\dot{\varepsilon})$ is a function of the strain rate (e.g. a power-law) that fits the experimental data on the rate-sensitivity of the matrix material. The form for $g\,(\dot{\varepsilon})$ that we have chosen to fit the matrix data is akin to a power-law rate-sensitivity in terms of an overstress function:

$$g(\dot{\varepsilon}) = \sigma_f\Big|_{quasistatic} + a\left(\frac{\dot{\varepsilon}}{\dot{\varepsilon}_0}\right)^m \tag{6}$$

where the parameters a, $\dot{\varepsilon}_0$, and m are obtained from the curve-fit.

We then define a new rate-dependent reference stress σ_0^r for the matrix alloy using the relation

$$\sigma_0^r = \sigma_0 + a\left(\frac{\dot{\varepsilon}}{\dot{\varepsilon}_0}\right)^m \tag{7}$$

where the parameters in the second term are obtained from equation (6). If we now replace σ_0 in equations (1) -(4) by σ_0^r from equation (7), we have an extended model that accounts for the rate-hardening of the matrix.

Equations (1-7) provide a complete model for the prediction of the behavior of the composite material over a wide range of strain rates based solely on the properties of the matrix material, the reinforcement volume fraction, and the reinforcement shape. Comparisons between the predictions of the new model and the experimental data are presented in Figs. 12(a) and (b) in terms of the stress-strain curves at high rates and in terms of the rate-sensitivity. The quality of the agreement is reasonably good for so simple-minded a model.

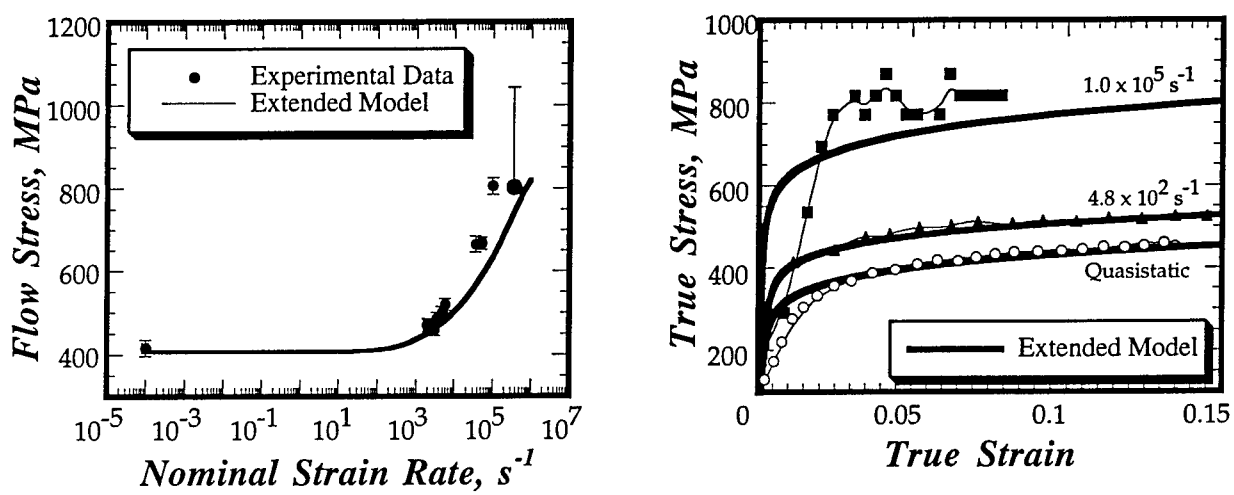

Fig. 12 Comparisons between the predictions of the YCR extended model and the experimental data (symbols): high strain rate behavior of the model metal-matrix composite

4.4.3 Conclusions: Dynamic Behavior of Dual-Phase Composites

- The strengthening of the composite due to the particulate reinforcement continues into the high strain rate regime.
- The composite material displays a greater rate-sensitivity than does the monolithic alloy at high strain rates.
- A simple model has been developed that predicts the behavior of the composite material given only the dynamic behavior of the matrix material and the reinforcement volume fraction and shape.

4.5 Result V: A Technique for the Dynamic Measurement of Radial Strains

A novel technique has been developed for the direct non-contact measurement of the radial deformations of a specimen during a compression Kolsky bar (split-Hopkinson pressure bar) experiment. Application of the new technique makes possible an analysis of the compression Kolsky bar experiment in terms of finite deformations, since the technique provides a complete experimental determination of the deformation gradient tensor during dynamic loading. Using the new technique, we have determined the relative validity of the incompressibility and Bell constraints for finite deformation dynamic plasticity. The experimental results show that the plastic incompressibility constraint is more appropriate for the dynamic compression of 6061-T6 aluminum. We have also shown that the traditional measure of axial strain rate derived from Kolsky bar experiments should be replaced by the axial rate of deformation that is valid for finite deformations. Finally, our results show that the new technique extends the capabilities of the compression Kolsky bar technique to include the investigation of plastically compressible materials.

The technique is described in detail in Publication 16 of the List of Resulting Publications.

4.6 Result VI: A Technique for the Continuous Measurement of Projectile Velocity

Asimple yet accurate technique has been deveoped for the continuous measurement of projectile velocities in plate impact experiments (the impact velocity is a critical parameter in the interpretation of such experiments). The technique, known as the Laser Line Velocity Sensor (LLVS), uses a laser line generator to generate a laser sheet of uniform intensity that is incident on a photodiode at the focus of a collecting lens. The amount of light reaching the photodiode diminishes as the projectile intersects the laser sheet, and so a simple calibration procedure in conjunction with a high-bandwidth optoelectronic system provides a measure of the projectile velocity. Since the measurement is continuous, both the projectile velocity and acceleration can be obtained. The LLVS is very stable, does not need reconstruction after impact, does not need frequent recalibration, and is insensitive to rigid body motions.

The technique is described in detail in Publication 15 of the List of Resulting Publications.

5.0 Educational Mission

The research described here was conducted primarily by graduate and undergraduate students at the Johns Hopkins University. A strong feature of the Hopkins tradition is the cooperation between the faculty and their students (graduate and undergraduate) on research. This is borne out by the number of undergraduate students in the laboratories of the PI.

One graduate student, Sunil Yadav, has been involved in this work since he arrived at Johns Hopkins in 1991. He has obtained a Master's and will continue on towards a Ph.D. focusing on the high-rate deformation of WBCs. A second graduate student, Andrew Lennon, is working with AASERT support on a Ph.D. focused on the high-rate deformation and failure of pure polycrystalline and single crystal tungsten. James Davis was instrumental in the develop-ment of the Plate Impact Facility at Hopkins, graduating with a M.S. degree. Edward Horwath of ARL WTD spent a year on LTTA in the Laboratory working on single crystal tungsten.

Several undergraduate students have been involved with this research program: Richard Fowler, Kevin Capinpin, John Buchanan, Sudi Narasimhan, Louis Jauvtis, Ms. Naida Zejevic, and Stephen Chong. During the summers the undergraduates were all required to attend my weekly research meetings, and occasionally to present their work. Of the four students who have since graduated, three (Buchanan, Narasimhan, and Chong) have gone on to graduate school in engineering.

6.0 Resulting List of Publications

1. Ramesh, K.T., & Coates, R.S., "Microstructural Influences on the Viscoplastic Response of Tungsten Heavy Alloys," Met. Trans. A, Vol. 23A, pp. 2625-2630, 1992.

2. Bao, G., & Ramesh, K.T., "Plastic Flow of a Tungsten-Based Composite under Quasi-Static Compression," Acta Metall. Mater., Vol. 41, No. 9, pp. 2711-2719, 1993.

3. Ramesh, K.T., "On the Localization of Shearing Deformations in a Tungsten Heavy Alloy," Mechanics of Materials, Vol. 17, pp. 165-173, 1994.

4. Chichili, D.R., & Ramesh, K.T., "Dynamic Failure Mechanisms in a 6061-T6 Al/Al2O3 Metal-Matrix Composite," International Journal of Solids and Structures, in press.

5. Yadav, S., Chichili, D.R., & Ramesh, K.T., "The Mechanical Properties of a 6061-T6 Al/Al2O3 Metal-Matrix Composite at High Rates of Deformation," Acta Met., to appear.

6. Ramesh, K.T., Yadav, S., & Davis, J.A., "Shear Localization in a Tungsten Heavy Alloy," Tungsten & Tungsten Alloys–1992, pp. 299-306, MPIF, Annandale, NJ, 1993.

7. Bao, G., & Ramesh, K.T., "The Deformation of a Tungsten-Based MMC Under Compression," Mechanisms & Mechanics of Composites Fracture, ASM, 1993.

8. Ramesh, K.T., "Influence of W Content, Swaging, & Grain Size on the Viscoplastic Response of Tungsten Heavy Alloys," High Rate Props. Refractory Metals, TMS, 1991.

9. Ramesh, K.T., & Coates, R.S., "The Deformation of Tungsten Alloys at High Rates," Shock Wave & High Rate Phenomena in Matls., ed.Meyers et.al., Marcel Dekker, 1992.

10. Yadav, S., Davis, J.A., & Ramesh, K.T., "Damage and Recovery Experiments Using Pressure-Shear Plate Impact," Experimental Techniques in the Dynamics of Deformable Solids, ed. K.T. Ramesh, AMD – Vol. 165, pp. 71–78, 1993.

11. Bao, G., Lin, Z., & Ramesh, K.T., "Plastic Flow and Damage in a Tungsten-Based Composite," Proc. 13th Army Symp. Solid Mech., Plymouth, MA, pp. 101-116, 1993.

12. Yadav, S. & Ramesh, K.T., "The High Strain Rate Behavior of Tungsten-Based Composites," Tungsten & Refractory Metals, MPIF, 1994.

13. Horwath, E.J., & Ramesh, K.T., "The High Strain Rate Behavior of Tungsten Single Crystals," Tungsten & Refractory Metals, MPIF, 1994.

14. Yadav, S., & Ramesh, K.T., "The Mechanical Behavior of Tungsten-Based Composites at Very High Strain Rates," Mater. Sci. & Eng. A, submitted for publication.

15. Ramesh, K.T., & Kelkar, N., "A Technique for the Continuous Measurement of Projectile Velocities in Plate Impact Experiments," Review of Scientific Instruments, accepted for publication, 1994.

16. Ramesh, K.T., & Narasimhan, S., "Finite Deformations and the Dynamic Measurement of Radial Strains in Compression Kolsky Bar Experiments," International Journal of Solids & Structures, submitted, 1994.

7.0 List of Scientific Personnel

The following personnel were supported by or involved with the research associated with this grant at various times and to varying degrees:

Faculty: K.T. Ramesh, Associate Professor

Graduate Students: J.A. Davis, S. Yadav, R. Feng, M. da Silva, E.J. Horwath (on LTTA from ARL), and A.M. Lennon.

Undergraduate Students: Stephen Chong, Sudi Narasimhan, J.R. Buchanan, Richard Fowler, Kevin Capinpin, Louis Jauvtis, and Naida Zejevic.

Degrees Awarded: J.A. Davis — M.S.E. in Mechanical Engineering
S. Yadav — M.S.E. in Mechanical Engineering

8.0 References

1. BAO, G., & RAMESH, K.T., Acta Metall. Mater., Vol. 41, No. 9, pp. 2711-2719, 1993.
2. BAO, G., HUTCHINSON, J.W., & MCMEEKING, R.M., Acta Metall. Mater., Vol. 39, No. 8, pg. 1863, 1991.
3. BOURGUIGNON, L.L., & GERMAN, R.M., Intl. Jnl. Pwdr. Metall., Vol. 24, pg. 115, 1988.
4. COATES, R.S., & RAMESH, K.T., Mater. Sci. & Eng. A, Vol. 145, pp. 159-166, 1991.
5. COUQUE, H., & LANKFORD, J., Proceedings of the 4th International Conference on the Mechanical Properties of Materials at High Rates of Strain, Oxford, pg. 89, 1989.
6. EKBOM, L., Modern Developments in Powder Metallurgy, vol. 14, pg. 177, 1981.
7. EVANS, A.G., et al., Scripta Metall. Mater., Vol. 25, pg. 3, 1991.
8. GIOVANOLA, J., Impact Ldg. & Dynamic Bhvr. Matls., Bremen, Vol. 2, pg. 705, 1988.
9. GURWELL, W.E., Progress in Powder Metallurgy, Vol. 41, pg. 327, 1985.
10. HORWATH, E.J., & RAMESH, K.T., Proc. Conf. Tungsten & Refractory Materials, MPIF, Princeton NJ, 1994a
11. HORWATH, E.J., & RAMESH, K.T., in preparation, 1994b
12. JOHNSON, G.R., HOEGFELDT, J.M., LINDHOLM, U.S., & NAGY, A., Journal of Engineering Materials and Technology, Vol. 105, pg. 48, 1983.
13. KROCK, R.H., & SHEPARD, L.A., Trans. Met. Soc. AMIE, Vol. 227, pg. 1127, 1963.
14. LANKFORD, J., ANDERSON, C.E., & BODNER, S.R., Jnl. Matls. Science Letters, Vol. 7, pg. 1355, 1988.
15. MAGNESS, L.S., Jr., Tungsten & Tungsten Alloys, ed. A. Bose & R.J. Dowding, MPIF, Princeton NJ, pp. 15-22, 1992.

16. MEYER, L.W. & KUNZE, H.D., Metall. Applications of Shock-Wave and High Strain Rate Phenomena, ed. Meyers & Murr, pg. 481, 1985.

17. O'DONNELL, R.G., & WOODWARD, R.L., Metall. Trans. A, vol. 21A, pp. 744-48, 1990

18. RABIN, B.H., & GERMAN, R.M., Metall. Trans. A, Vol. 19A, pg. 1523, 1988.

19. RAMESH, K.T., & COATES, R.S., Metall. Trans. A, Vol. 23A, pp. 2625-2630, 1992.

20. RAMESH, K.T., YADAV, S., & DAVIS, J.A., Tungsten & Tungsten Alloys-1992, ed. A. Bose & R.J. Dowding, MPIF, Princeton, pp. 299-306, 1992.

21. RAMESH, K.T., Mechanics of Materials, Vol. 17, pp. 165-173, 1994.

22. SRIKANTH, V. & UPADHYAYA, G.S., J. Mater. Sci. Lett., Vol. 7, pp. 195-197, 1988.

23. SUBHASH, G. & RAVICHANDRAN, G., Experimental Techniques in the Dynamics of Deformable Solids, ed. K.T. Ramesh, AMD-165, ASME, NY, pg. 79, 1993.

24. WEERASOORIYA, T. & BEAULIEU, P.A., Tungsten & Tungsten Alloys-1992, ed. A. Bose & R.J. Dowding, pp. 317-324, MPIF, Princeton, 1992.

25. WOODWARD, R.L., MCDONALD, I.G., & GUNNER, A., Journal of Materials Science Letters, Vol. 5, pg. 413, 1986.

26. YADAV, S., CHICHILI, D.R., & RAMESH, K.T., Acta Met. Mater., to appear, 1994.

27. YADAV, S. & RAMESH, K.T., Mater. Sci. & Eng. A, submitted, 1994.

28. ZHOU, M., CLIFTON, R.J., & NEEDLEMAN, A., Jnl. Mech. Phys. Sol., 42, 1994.

29. ZUREK, A.K., FOLLANSBEE, P.S., & KAPOOR, D., High Strain Rate Behavior of Refractory Metals and Alloys, ed. R. Asfahani, E. Chen, & A. Crowson, TMS, Warrendale PA, pg. 179, 1992.