UNITED STATES AIR FORCE
611TH AIR SUPPORT GROUP
611TH CIVIL ENGINEER SQUADRON
ELMENDORF AFB, ALASKA

FINAL

REMEDIAL INVESTIGATION/FEASIBILITY STUDY REPORT

INSTALLATION RESTORATION PROGRAM (IRP) REMEDIAL INVESTIGATION/FEASIBILITY STUDY

KOTZEBUE LONG RANGE RADAR STATION, ALASKA

DTIC
SELECTED
AUG 17 1995
G

JULY 1995

DISTRIBUTION STATEMENT A
Approved for public release;
Distribution Unlimited

19950815 029

VOLUME II
(APPENDICES)

DTIC QUALITY INSPECTED 5

DISCLAIMER NOTICE

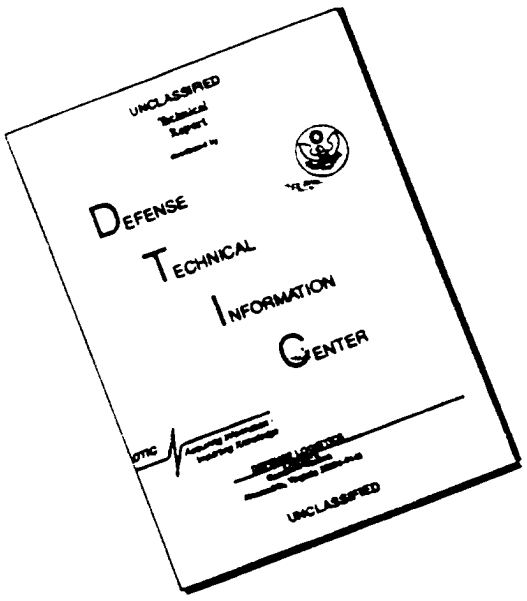

THIS DOCUMENT IS BEST QUALITY AVAILABLE. THE COPY FURNISHED TO DTIC CONTAINED A SIGNIFICANT NUMBER OF PAGES WHICH DO NOT REPRODUCE LEGIBLY.

UNITED STATES AIR FORCE
611TH AIR SUPPORT GROUP
611TH CIVIL ENGINEER SQUADRON
ELMENDORF AFB, ALASKA

DRAFT
REMEDIAL INVESTIGATION/FEASIBILITY STUDY REPORT

INSTALLATION RESTORATION
PROGRAM (IRP) REMEDIAL
INVESTIGATION/FEASIBILITY STUDY

KOTZEBUE LONG RANGE
RADAR STATION, ALASKA

Accesion For
NTIS CRA&I [X]
DTIC TAB [ ]
Unannounced [ ]
Justification
By
Distribution /
Availability Codes
Dist | Avail and / or Special
A-1

MAY 1995

VOLUME II
(APPENDICES)

19950815 029

PREPARED BY:

TETRA TECH INC.
15400 NE 90TH, SUITE 100
REDMOND, WA 98052

DISTRIBUTION STATEMENT A
Approved for public release;
Distribution Unlimited

REPORT DOCUMENTATION PAGE

Form Approved
OMB No. 0704-0188

Public reporting burden for this collection of information is estimated to average 1 hour per response, including the time for reviewing instructions, searching existing data sources, gathering and maintaining the data needed, and completing and reviewing the collection of information. Send comments regarding this burden estimate or any other aspect of this collection or information, including suggestions for reducing this burden, to Washington Headquarters Services, Directorate for Information Operations and Reports, 1215 Jefferson Davis Highway, Suite 1204, Arlington, VA 22202-4302, and to the Office of Management and Budget, Paperwork Reduction Project (0704-0188), Washington, DC 20503.

1. AGENCY USE ONLY (Leave Blank)	2. REPORT DATE	3. REPORT TYPE AND DATES COVERED
	July 1995	

4. TITLE AND SUBTITLE

Final Remedial Investigation/Feasibility Study Report,
Installation Restoration Program Remedial Investigation/Feasibility Study,
Kotzebue Long Range Radar Station, Alaska.

5. FUNDING NUMBERS

USAF Contract No.
F33615-90-D-4006

6. AUTHOR(S)

Tetra Tech, Inc.

7. PERFORMING ORGANIZATION NAME(S) AND ADDRESS(ES)

Tetra Tech, Inc.
15400 NE 90th Street, Suite 100
Redmond, Washington 98052

8. PERFORMING ORGANIZATION REPORT NUMBER

N/A

9. SPONSORING/MONITORING AGENCY NAME(S) AND ADDRESS(ES)

Air Force Center for Environmental Excellence
Environmental Services Office
Environmental Restoration Division (AFCEE/ERD)
Brooks Air Force Base, Texas 78235-5328

10. SPONSORING/MONITORING AGENCY REPORT NUMBER SPONSORING/MONITORING AGENCY REPORT NUMBER

N/A

11. SUPPLEMENTARY NOTES

12a. DISTRIBUTION/AVAILABILITY STATEMENT

Approved for Public Release. Distribution is Unlimited.

12b. DISTRIBUTION CODE

13. ABSTRACT *(Maximum 200 words)*

The purpose of the Remedial Investigation/Feasibility Study Report is to provide a comprehensive description of Kotzebue LRRS, including the installation's operational history and environmental setting; a summary of past IRP investigations at the site; a detailed description of the 1994 remedial investigation; a site conceptual model integrating available site information; and site-specific summaries and recommendations. This document also incorporates a feasibility study which identifies cleanup objectives, evaluates various remedial action alternatives, and recommends appropriate actions to meet cleanup objectives.

14. SUBJECT TERMS

Final Remedial Investigation/Feasiility Study Report

15. NUMBER OF PAGES

376

16. PRICE CODE

17. SECURITY CLASSIFICATION OF REPORT	18. SECURITY CLASSIFICATION OF THIS PAGE	19. SECURITY CLASSIFICATION OF ABSTRACT	20. LIMITATION OF ABSTRACT
Unclassified	Unclassified	Unclassified	UL

NSN 7540-01-280-5500

Standard Form 298 (Rev 2-89)

VOLUME II

APPENDICES

APPENDIX A. SOIL BORING LOGS

APPENDIX B. WELL COMPLETION DIAGRAMS

APPENDIX C. WELL AND SAMPLE LOCATION SURVEY DATA

APPENDIX D. AQUIFER TEST DATA

APPENDIX E. GEOTECHNICAL DATA REPORT

APPENDIX F. GRADIOMETRIC SURVEY DESCRIPTION

APPENDIX G. FIELD QA/QC REPORT

APPENDIX H. ON-SITE LABORATORY AUDIT REPORT

APPENDIX I. 5% RAW LABORATORY DATA AUDIT REPORT

APPENDIX J. SAMPLE CHAIN-OF-CUSTODY

APPENDIX K. QUALITY ASSURANCE REPORT

APPENDIX L. ANALYTICAL DAT SUMMARY

APPENDIX A – SOIL BORING LOGS

TETRA TECH

GEOLOGIC LOG OF SOIL BORING
Background-SB1

PROJECT: Kotzebue LRRS Remedial Investigation
CLIENT/OWNER: AFCEE/USAF
TETRA TECH PROJECT NUMBER: 9676-13
EXPLORATION NUMBER: Background-SB1
START DATE: 27 June 1994 HOUR: 1200
GROUND SURFACE CONDITIONS: Beach Gravel
CORRESPONDING WELL DESIGNATION: Background-MW1

CONTRACTOR REPRESENTATIVE: David R. Hose
EXPLORATION CONTRACTOR: Ambler Exploration
OPERATOR: Steve Moore
DRILL TYPE/METHOD: Track-Mounted Hollow Stem Auger
HAMMER WEIGHT & STROKE: 140 lbs./30 inches
AUGER SIZE: 4.25" I.D., 7.0" O.D., 8.0" O.D. Bit

WATER LEVEL INFORMATION
DATE: 27 June 1994 TIME: 1330
DEPTH OF WATER: 7.3 feet below ground surface
(first encountered)

Sample Number/ Analysis/Depth	PID Response Over Background	Blow Count per 6-in Interval ___/___/___	Recovery (inches)	Depth (feet)	Lithology	Description/Comments
Background-SB1-0.5 (Pest./PCB)				0		
				1		
				2		
	NA	5/7/14	9/18	3	GW	Drive 2.5 - 4.0 ft. Top of core is sandy GRAVEL (GW), brown, sand medium to coarse grained, gravel pea sized to 3/4 inch diameter, well graded, medium dense, moist, angular to sub angular. Lower 6 inches of core is silty SAND (SW), brownish gray, sand fine to very coarse grained, well graded, medium dense, moist, subangular to subrounded. No odor or staining.
				4	SW	
	NA	8/14/12	0/18	5	GW	Drive 5.0 - 6.5 ft. Sandy GRAVEL (GW), no core recovery. No odor.
				6		
				7		
Background-SB1-7.5 (TPH)	NA	47/54//57	18/18	8		Drive 7.5 - 9.0 ft. Sandy GRAVEL (GW), brown, sand medium to coarse grained, gravel to 1-1/2 inch diameter, well graded, dense, wet and frozen, angular to subrounded. No odor or staining.
Background-SB1-9.0 (VOCS)				9		
	NA	29/39/41	12/18	10		Drive 10.0 - 11.5 ft. Sandy GRAVEL (GW), same as above. No odor or staining.
Background-SB1-11.0 (SVOCS)				11		TOTAL DEPTH OF BORING: 11.0 ft. below ground surface

NA = PID not available

FINISH DATE: 27 June 1994 HOUR: 1600

Groundwater Level During Drilling

TETRA TECH

GEOLOGIC LOG OF SOIL BORING
ST05-SB1

PROJECT: Kotzebue LRRS Remedial Investigation
CLIENT/OWNER: AFCEE/USAF
TETRA TECH PROJECT NUMBER: 9676-13
EXPLORATION NUMBER: ST05-SB1
START DATE: 28 June 1994 HOUR: 900
GROUND SURFACE CONDITIONS: Beach Gravel & Grass
CORRESPONDING WELL DESIGNATION: ST05-MW1

CONTRACTOR REPRESENTATIVE: David R. Hose
EXPLORATION CONTRACTOR: Ambler Exploration
OPERATOR: Steve Moore
DRILL TYPE/METHOD: Track-Mounted Hollow Stem Auger
HAMMER WEIGHT & STROKE: 140 lbs. / 30 inches
AUGER SIZE: 4.25" I.D., 7.0" O.D., 8.0" O.D. Bit

WATER LEVEL INFORMATION
DATE: 28 June 1994 TIME: 1000
DEPTH OF WATER: 8.0 feet below ground surface
(first encountered)

Sample Number/ Analysis/Depth	PID Response Over Background	Blow Count per 6-in Interval __/__/__	Recovery (inches)	Depth (feet)	Lithology	Description/Comments
	0	2/6/15	18/18	0–3	CL	Drive 2.5 - 4.0 ft. Gravelly, sandy, silty CLAY (CL), brown, sand medium grained, gravel pea sized, very stiff, moist, sand and gravel rounded, not plastic. No odor or staining.
	0	4/5/6	12/18	5–6	GW	Drive 5.0 - 6.5 ft. Sandy GRAVEL (GW), brown, sand medium to coarse grained, gravel to 1/2 inch diameter, well graded, medium dense, moist, rounded. No odor or staining.
ST05-SB1-8.0 (VOCS) ST05-SB1-8.5 (TPH+SVOCS)	0	5/7/9	9/18	8		Drive 7.5 - 9.0 ft. Sandy GRAVEL (GW), same as above, becomes wet. No odor or staining.

Groundwater Level During Drilling

TETRA TECH

GEOLOGIC LOG OF SOIL BORING
ST05-SB1

PROJECT: Kotzebue LRRS Remedial Investigation
CLIENT/OWNER: AFCEE/USAF
TETRA TECH PROJECT NUMBER: 9676-13
EXPLORATION NUMBER: ST05-SB1
START DATE: 28 June 1994 HOUR: 900
GROUND SURFACE CONDITIONS: Beach Gravel & Grass
CORRESPONDING WELL DESIGNATION: ST05-MW1

CONTRACTOR REPRESENTATIVE: David R. Hose
EXPLORATION CONTRACTOR: Ambler Exploration
OPERATOR: Steve Moore
DRILL TYPE/METHOD: Track-Mounted Hollow Stem Auger
HAMMER WEIGHT & STROKE: 140 lbs. / 30 inches
AUGER SIZE: 4.25" I.D., 7.0" O.D., 8.0" O.D. Bit

WATER LEVEL INFORMATION
DATE: 28 June 1994 TIME: 1000
DEPTH OF WATER: 8.0 feet below ground surface
(first encountered)

Sample Number/ Analysis/Depth	PID Response Over Background	Blow Count per 6-in Interval ___/___/___	Recovery (inches)	Depth (feet)	Lithology	Description/Comments
	0	4/6/8	12/18	10	GW	Drive 10.0 - 11.5 ft. Sandy GRAVEL (GW), same as above. No odor or staining.
				11		
				12		TOTAL DEPTH OF BORING: 12.0 ft. below ground surface
				13		
				14		
				15		
				16		
				17		
				18		
				19		
				20		

FINISH DATE: 28 June 1994 HOUR: 1145

TETRA TECH

GEOLOGIC LOG OF SOIL BORING
ST05-SB2

PROJECT: Kotzebue LRRS Remedial Investigation
CLIENT/OWNER: AFCEE/USAF
TETRA TECH PROJECT NUMBER: 9676-13
EXPLORATION NUMBER: ST05-SB2
START DATE: 28 June 1994 HOUR: 1200
GROUND SURFACE CONDITIONS: Beach Gravel
CORRESPONDING WELL DESIGNATION: ST05-MW2

CONTRACTOR REPRESENTATIVE: David R. Hose
EXPLORATION CONTRACTOR: Ambler Exploration
OPERATOR: Steve Moore
DRILL TYPE/METHOD: Track-Mounted Hollow Stem Auger
HAMMER WEIGHT & STROKE: 140 lbs. / 30 inches
AUGER SIZE: 4.25" I.D., 7.0" O.D., 8.0" O.D. Bit

WATER LEVEL INFORMATION
DATE: 28 June 1994 TIME: 1400
DEPTH OF WATER: 7.5 feet below ground surface
(first encountered)

Sample Number/ Analysis/Depth	PID Response Over Background	Blow Count per 6-in Interval __/__/__	Recovery (inches)	Depth (feet)	Lithology	Description/Comments
				0		
	3	4/5/7	12/18	3	GW	Drive 2.5 - 4.0 ft. Sandy GRAVEL (GW), grayish brown (10YR 5/2), sand medium grained, gravel pea sized to 1 inch diameter, well graded, medium dense, moist, subrounded. Slight petroleum odor, no staining.
	4	5/8/7	14/18	5		Drive 5.0 - 6.5 ft. Sandy GRAVEL (GW), olive gray (10YR 4.5/1), sand medium grained, gravel to 3/4 inch diameter, well graded, medium dense, moist, well rounded. Little or no silt. Petroleum odor but no staining.
ST05-SB2-8.0 (TPH)	190	4/17/41	12/18	7.5		Drive 7.5 - 9.0 ft. Sandy GRAVEL (GW), dark gray (2.5Y 4/1) to very dark gray (2.5Y 3/1), sand fine to coarse grained, gravel pea size to 3/8 inch diameter, well graded, dense, wet and frozen, well rounded. Strong petroleum odor, but no staining.
				10		

Groundwater Level During Drilling

TETRA TECH

GEOLOGIC LOG OF SOIL BORING
ST05-SB2

PROJECT: Kotzebue LRRS Remedial Investigation
CLIENT/OWNER: AFCEE/USAF
TETRA TECH PROJECT NUMBER: 9676-13
EXPLORATION NUMBER: ST05-SB2
START DATE: 29 June 1994 HOUR: 1200
GROUND SURFACE CONDITIONS: Beach Gravel
CORRESPONDING WELL DESIGNATION: ST05-MW2

CONTRACTOR REPRESENTATIVE: David R. Hose
EXPLORATION CONTRACTOR: Ambler Exploration
OPERATOR: Steve Moore
DRILL TYPE/METHOD: Track-Mounted Hollow Stem Auger
HAMMER WEIGHT & STROKE: 140 lbs. / 30 inches
AUGER SIZE: 4.25" I.D., 7.0" O.D., 8.0" O.D. Bit

WATER LEVEL INFORMATION
DATE: 28 June 1994 TIME: 1400
DEPTH OF WATER: 7.5 feet below ground surface
(first encountered)

Sample Number/ Analysis/Depth	PID Response Over Background	Blow Count per 6-in Interval __/__/__	Recovery (inches)	Depth (feet)	Lithology	Description/Comments
	120	40/18/12	12/18	10	GW	Drive 10.0 - 11.5 ft. Sandy GRAVEL (GW), same as above.
				11		
				12		TOTAL DEPTH OF BORING: 12.0 ft. below ground surface
				13		
				14		
				15		
				16		
				17		
				18		
				19		
				20		

FINISH DATE: 28 June 1994 HOUR: 1450

TETRA TECH

GEOLOGIC LOG OF SOIL BORING
ST05-SB3

PROJECT: Kotzebue LRRS Remedial Investigation
CLIENT/OWNER: AFCEE/USAF
TETRA TECH PROJECT NUMBER: 9676-13
EXPLORATION NUMBER: ST05-SB3
START DATE: 28 June 1994 HOUR: 1630
GROUND SURFACE CONDITIONS: Beach Gravel
CORRESPONDING WELL DESIGNATION: NA

CONTRACTOR REPRESENTATIVE: David R. Hose
EXPLORATION CONTRACTOR: Ambler Exploration
OPERATOR: Steve Moore
DRILL TYPE/METHOD: Track-Mounted Hollow Stem Auger
HAMMER WEIGHT & STROKE: 140 lbs/30 inches
AUGER SIZE: 4.25" I.D., 7.0" O.O, 8.0" Bit

WATER LEVEL INFORMATION
DATE: 28 June 1994 TIME: 1700
DEPTH OF WATER: 7.5 feet below ground surface
(first encountered)

Sample Number/ Analysis/Depth	PID Response Over Background	Blow Count per 6-in Interval ___/___/___	Recovery (inches)	Depth (feet)	Lithology	Description/Comments
	0	3/6/10	6/18	0	GW	Drive 0.0 - 1.5 ft. Silty, sandy GRAVEL (GW), grayish brown (10YR 5/2), sand fine to medium grained, gravel to 1 inch diameter, silt ~5%, well graded, medium dense, moist, subrounded. No odor or staining.
	0	5/5/6	14/18	2		Drive 2.5 - 4.0 ft. Sandy GRAVEL (GW), grayish brown (10YR 5/2), sand fine to medium grained, gravel to 1 inch diameter, well graded, loose to medium dense, moist, subangular to angular. No odor or staining.
	0	4/5/6	14/18	5		Drive 5.0 - 6.5 ft. Sandy GRAVEL (GW), same as above with increasing percentage of sand. No odor or staining.
ST05-SB3-8.0 (TPH+VOCS+SVOCS)	150	8/41/43	16/18	7		Drive 7.5 - 9.0 ft. Sandy GRAVEL (GW), same as above, becomes wet and frozen. Strong petroleum odor, no staining.
				10		TOTAL DEPTH OF BORING: 10 feet below ground surface

SHEET 1 OF 1

FINISH DATE: 28 June 1994 HOUR: 1720

Groundwater Level During Drilling

TETRA TECH

GEOLOGIC LOG OF SOIL BORING
ST05-SB4

PROJECT: Kotzebue LRRS Remedial Investigation
CLIENT/OWNER: AFCEE/USAF
TETRA TECH PROJECT NUMBER: 9676-13
EXPLORATION NUMBER: ST05-SB4
START DATE: 29 June 1994 HOUR: 800
GROUND SURFACE CONDITIONS: Asphalt Pad
CORRESPONDING WELL DESIGNATION: NA

CONTRACTOR REPRESENTATIVE: David R. Hose
EXPLORATION CONTRACTOR: Ambler Exploration
OPERATOR: Steve Moore
DRILL TYPE/METHOD: Track-Mounted Hollow Stem Auger
HAMMER WEIGHT & STROKE: 140 lbs./30 inches
AUGER SIZE: 4.25"I.D., 7.0" O.D., 8.0" O.D. Bit

WATER LEVEL INFORMATION
DATE: 29 June 1994 TIME: 1010
DEPTH OF WATER: 7.5 feet below ground surface
(first encountered)

Sample Number/ Analysis/Depth	PID Response Over Background	Blow Count per 6-in Interval __/__/__	Recovery (inches)	Depth (feet)	Lithology	Description/Comments
	0	3/5/7	12/18	1	GW	Drive 1.5 - 3.0 ft. Sandy GRAVEL (GW), very dark grayish brown (10YR 3/2), sand medium to coarse grained, gravel to 1/2 inch diameter, well graded, medium dense, moist, subrounded. No odor or staining.
	0	4/8/9	14/18	5		Drive 5.0 - 6.5 ft. Sandy GRAVEL (GW), same as above. No odor or staining.
ST05-SB4-8.0 (TPH)	0	52/97/132	18/18	7		Drive 7.5 - 9.0 ft. Sandy GRAVEL (GW), same as above, very dense, becomes wet and frozen. No odor or staining.
				10		TOTAL DEPTH OF BORING: 10.0 ft. below ground surface

SHEET 1 OF 1

FINISH DATE: 28 June 1994 HOUR: 1100

Groundwater Level During Drilling

TETRA TECH

GEOLOGIC LOG OF SOIL BORING
ST05-SB5

PROJECT: Kotzebue LRRS Remedial Investigation
CLIENT/OWNER: AFCEE/USAF
TETRA TECH PROJECT NUMBER: 9676-13
EXPLORATION NUMBER: ST05-SB5
START DATE: 29 June 1994 HOUR: 1115
GROUND SURFACE CONDITIONS: Gravel Hardpan
CORRESPONDING WELL DESIGNATION: ST05-MW3

CONTRACTOR REPRESENTATIVE: David R. Hose
EXPLORATION CONTRACTOR: Ambler Exploration
OPERATOR: Steve Moore
DRILL TYPE/METHOD: Track-Mounted Hollow Stem Auger
HAMMER WEIGHT & STROKE: 140 lbs./30 inches
AUGER SIZE: 4.25"I.D., 7.0" O.D., 8.0" O.D. Bit

WATER LEVEL INFORMATION
DATE: 29 June 1994 TIME: 1230
DEPTH OF WATER: 6.5 feet below ground surface
(first encountered)

Sample Number/ Analysis/Depth	PID Response Over Background	Blow Count per 6-in Interval __/__/__	Recovery (inches)	Depth (feet)	Lithology	Description/Comments
	0	4/6/6	14/18	0–3	GW	Drive 2.5 - 4.0 ft. Sandy GRAVEL (GW), very dark gray (5YR 3/1), sand medium grained, gravel pea sized to 1 inch diameter, well graded, medium dense, moist, rounded to subangular. No odor or staining.
	3	4/5/6	12/18	5		Drive 5.0 - 6.5 ft. Sandy GRAVEL (GW), olive gray (10YR 4.5/1), sand medium grained, gravel to 3/4 inch diameter, well graded, medium dense, moist, well rounded. Slight petroleum odor but no staining.
ST05-SB5-8.0 (TPH)	5	27/53/66	16/18	7–8		Drive 7.5 - 9.0 ft. Sandy GRAVEL (GW), dark gray (2.5Y 4/1) to very dark gray (2.5Y 3/1), sand fine to coarse grained, gravel pea size to 3/8 inch diameter, well graded, very dense, wet, frozen, well rounded. Slight petroleum odor, but no staining.
	0	57/68/71	18/18	10		Drive 10.0 - 11.5 ft. Sandy GRAVEL (GW), same as above with some minor organics. No odor or staining.
						TOTAL DEPTH OF BORING: 10.0 ft. below ground surface

SHEET 1 OF 1

FINISH DATE: 29 June 1994 HOUR: 1320

Groundwater Level During Drilling

TETRA TECH

GEOLOGIC LOG OF SOIL BORING
ST05-SB6

PROJECT: Kotzebue LRRS Remedial Investigation
CLIENT/OWNER: AFCEE/USAF
TETRA TECH PROJECT NUMBER: 9676-13
EXPLORATION NUMBER: ST05-SB6
START DATE: 29 June 1994 HOUR: 1445
GROUND SURFACE CONDITIONS: Beach Gravel
CORRESPONDING WELL DESIGNATION: NA

CONTRACTOR REPRESENTATIVE: David Hose
EXPLORATION CONTRACTOR: Ambler Exploration
OPERATOR: Steve Moore
DRILL TYPE/METHOD: Track-Mounted Hollow Stem Auger
HAMMER WEIGHT & STROKE: 140 lbs./30 inches
AUGER SIZE: 4.25"I.D., 7.0" O.D., 8.0" O.D. Bit

WATER LEVEL INFORMATION
DATE: 29 June 1994 TIME: 1510
DEPTH OF WATER: 4.0 feet below ground surface
(first encountered)

Sample Number/ Analysis/Depth	PID Response Over Background	Blow Count per 6-in Interval __/__/__	Recovery (inches)	Depth (feet)	Lithology	Description/Comments
				0		
				1		
				2		
	7	1/2/6	8/18	3	GW	Drive 3.0 - 4.5 ft. Sandy GRAVEL (GW), very dark gray (5YR 3/1), sand medium to coarse grained, gravel pea sized to 1/2 inch diameter, well graded, loose, moist to wet, subangular to subrounded. Slight petroleum odor, but no staining.
ST05-SB6-4.0 (TPH)				4		
				5		TOTAL DEPTH OF BORING: 5.0 ft. below ground surface
				6		
				7		
				8		
				9		
				10		
				11		

SHEET 1 OF 1

FINISH DATE: 29 June 1994 HOUR: 1520

Groundwater Level During Drilling

TETRA TECH

GEOLOGIC LOG OF SOIL BORING
ST05-SB7

PROJECT: Kotzebue LRRS Remedial Investigation
CLIENT/OWNER: AFCEE/USAF
TETRA TECH PROJECT NUMBER: 9676-13
EXPLORATION NUMBER: ST05-SB7
START DATE: 29 June 1994 HOUR: 1530
GROUND SURFACE CONDITIONS: Beach Gravel
CORRESPONDING WELL DESIGNATION: NA

CONTRACTOR REPRESENTATIVE: David Hose
EXPLORATION CONTRACTOR: Ambler Exploration
OPERATOR: Steve Moore
DRILL TYPE/METHOD: Track-Mounted Hollow Stem Auger
HAMMER WEIGHT & STROKE: 140 lbs./30 inches
AUGER SIZE: 4.25"I.D., 7.0" O.D., 8.0" O.D. Bit

WATER LEVEL INFORMATION
DATE: 29 June 1994 TIME: 1545
DEPTH OF WATER: 4.0 feet below ground surface
(first encountered)

Sample Number/ Analysis/Depth	PID Response Over Background	Blow Count per 6-in Interval __/__/__	Recovery (inches)	Depth (feet)	Lithology	Description/Comments
				0		
				1		
				2		
	20	1/4/2	2/18	3	GW	Drive 3.0 - 4.5 ft. Sandy GRAVEL (GW), very dark gray (5YR 3/1), sand medium to coarse grained, gravel pea sized to 1/2 inch diameter, well graded, loose, moist to wet, subangular to subrounded. Strong petroleum odor, but no staining.
ST05-SB7-4.0 (TPH)				4		
				5		TOTAL DEPTH OF BORING: 5.0 ft. below ground surface
				6		
				7		
				8		
				9		
				10		
				11		

SHEET 1 OF 1

FINISH DATE: 29 June 1994 HOUR: 1550

Groundwater Level During Drilling

TETRA TECH

GEOLOGIC LOG OF SOIL BORING
ST05-SB8

PROJECT: Kotzebue LRRS Remedial Investigation
CLIENT/OWNER: AFCEE/USAF
TETRA TECH PROJECT NUMBER: 9676-13
EXPLORATION NUMBER: ST05-SB8
START DATE: 29 June 1994 HOUR: 1600
GROUND SURFACE CONDITIONS: Beach Gravel
CORRESPONDING WELL DESIGNATION: NA

CONTRACTOR REPRESENTATIVE: David Hose
EXPLORATION CONTRACTOR: Ambler Exploration
OPERATOR: Steve Moore
DRILL TYPE/METHOD: Track-Mounted Hollow Stem Auger
HAMMER WEIGHT & STROKE: 140 lbs./30 inches
AUGER SIZE: 4.25"I.D., 7.0" O.D., 8.0" O.D. Bit

WATER LEVEL INFORMATION
DATE: 29 June 1994 TIME: 1615
DEPTH OF WATER: 4.0 feet below ground surface
(first encountered)

Sample Number/ Analysis/Depth	PID Response Over Background	Blow Count per 6-in Interval __/__/__	Recovery (inches)	Depth (feet)	Lithology	Description/Comments
	150	sampler not used	0/18	0	GW	Drive 3.0 - 4.5 ft. Sandy GRAVEL (GW), very dark gray (5YR 3/1), sand medium to coarse grained, gravel pea sized to 1/2 inch diameter, well graded, loose, wet, subangular to subrounded. Strong petroleum odor, but no staining. Split spoon sampler not used due to poor recovery.
ST05-SB8-4.0 (TPH)				4		
				5		TOTAL DEPTH OF BORING: 5.0 ft. below ground surface

SHEET 1 OF 1 FINISH DATE: 29 June 1994 HOUR: 1620 Groundwater Level During Drilling

TETRA TECH

GEOLOGIC LOG OF SOIL BORING
ST05-SB9

PROJECT: Kotzebue LRRS Remedial Investigation
CLIENT/OWNER: AFCEE/USAF
TETRA TECH PROJECT NUMBER: 9676-13
EXPLORATION NUMBER: ST05-SB9
START DATE: 29 June 1994 HOUR: 1630
GROUND SURFACE CONDITIONS: Beach Gravel
CORRESPONDING WELL DESIGNATION: NA

CONTRACTOR REPRESENTATIVE: David Hose
EXPLORATION CONTRACTOR: Ambler Exploration
OPERATOR: Steve Moore
DRILL TYPE/METHOD: Track-Mounted Hollow Stem Auger
HAMMER WEIGHT & STROKE: 140 lbs./30 inches
AUGER SIZE: 4.25"I.D., 7.0" O.D., 8.0" O.D. Bit

WATER LEVEL INFORMATION
DATE: 29 June 1994 TIME: 1640
DEPTH OF WATER: 4.0 feet below ground surface
(first encountered)

Sample Number/ Analysis/Depth	PID Response Over Background	Blow Count per 6-in Interval __/__/__	Recovery (inches)	Depth (feet)	Lithology	Description/Comments
	20	sampler not used	0/18	0	GW	Drive 3.0 - 4.5 ft. Sandy GRAVEL (GW), very dark gray (5YR 3/1), sand medium to coarse grained, gravel pea sized to 1/2 inch diameter, well graded, loose, wet, subangular to subrounded. Strong petroleum odor, but no staining. Split spoon sampler not used due to poor recovery.
ST05-SB9-4.0 (TPH)				4		
				5		TOTAL DEPTH OF BORING: 5.0 ft. below ground surface
				6		
				7		
				8		
				9		
				10		
				11		

SHEET 1 OF 1 FINISH DATE: 29 June 1994 HOUR: 1700 Groundwater Level During Drilling

TETRA TECH

GEOLOGIC LOG OF SOIL BORING
ST05-SB10

PROJECT: Kotzebue LRRS Remedial Investigation
CLIENT/OWNER: AFCEE/USAF
TETRA TECH PROJECT NUMBER: 9676-13
EXPLORATION NUMBER: ST05-SB10
START DATE: 07 July 1994 HOUR: 1045
GROUND SURFACE CONDITIONS: Beach Gravel
CORRESPONDING WELL DESIGNATION: NA

CONTRACTOR REPRESENTATIVE: Rick Osgood PG / Kurt Schmierer PG
EXPLORATION CONTRACTOR: Ambler Exploration
OPERATOR: Steve Moore
DRILL TYPE/METHOD: Track-Mounted Hollow Stem Auger
HAMMER WEIGHT & STROKE: 140 lbs. / 30 inches
AUGER SIZE: 2.25" I.D., 5.0" O.D., 5.0" O.D. Bit

WATER LEVEL INFORMATION
DATE: 07 July 1994 TIME: 1115
DEPTH OF WATER: 7.0 feet below ground surface
(first encountered)

Sample Number/ Analysis/Depth	PID Response Over Background	Blow Count per 6-in Interval ___/___/___	Recovery (inches)	Depth (feet)	Lithology	Description/Comments
	0	3/6/8	11/18	3	GW/ ML	Drive 2.5 - 4.0 ft. Sandy GRAVEL (GW) with silt, olive tan (2.5Y 4/3), with rust staining, bimodal, fine sand, gravel to 1 inch diameter, well graded, polymict, medium dense, dry, rounded. Contains interbedded sandy SILT (ML), gray (2.5Y 6/1), moist, and PEAT, dark reddish brown (5YR 2.5/2), moist. No odor or staining.
	0	3/9/14	8/18	4	GW	Drive 4.0 - 5.5 ft. Sandy, silty, GRAVEL (GW), black (2.5Y 2.5/1) to olive brown (2.5Y 3/2), predominantly pea gravel with fine to coarse sand, well graded, polymict, medium dense, dry, rounded, minor organics, some iron staining. No odor or staining.
	5.1	11/16/16	12/18	6	GP	Drive 5.5 - 7.0 ft. Silty sandy GRAVEL (GP), olive brown (2.5Y 4/3), coarse gravel to 1 inch diameter, poorly graded, indistinct bedding (sorting on ~ 3 inch intervals), polymict, dense, slightly moist to moist, rounded. Thin silt layers between sand and gravel lenses.
ST05-SB10-7.0 (VOCS)						
	12	15/64/90	15/18	7		Drive 7.0 - 8.5 ft. Sandy GRAVEL (GP), gray (2.5Y 5/1) to light gray (2.5Y 6/1), predominantly coarse sand and pea gravel, poorly graded, polymict, very dense, moist to frozen, rounded. Some intermittent silts as thin interrelations. Some sorting, bedding on ~2 - 3 inch thick layers. Some layers are well graded with 1 - 2 inches of washed gravels with fewer fines. Distinct petroleum odor.
ST05-SB10-8.5 (SVOCS + TPH)				8		TOTAL DEPTH OF BORING: 8.5 ft. below ground surface

SHEET 1 OF 1

FINISH DATE: 07 July 1994 HOUR: 1155

Groundwater Level During Drilling

TETRA TECH

GEOLOGIC LOG OF SOIL BORING
ST05-SB11

PROJECT: Kotzebue LRRS Remedial Investigation
CLIENT/OWNER: AFCEE/USAF
TETRA TECH PROJECT NUMBER: 9676-13
EXPLORATION NUMBER: ST05-SB11
START DATE: 07 July 1994 HOUR: 1225
GROUND SURFACE CONDITIONS: Beach Gravel
CORRESPONDING WELL DESIGNATION: NA

CONTRACTOR REPRESENTATIVE: Rick Osgood PG / Kurt Schmierer PG
EXPLORATION CONTRACTOR: Ambler Exploration
OPERATOR: Steve Moore
DRILL TYPE/METHOD: Track-Mounted Hollow Stem Auger
HAMMER WEIGHT & STROKE: 140 lbs. / 30 inches
AUGER SIZE: 2.25" I.D., 5.0" O.D., 5.0" O.D. Bit

WATER LEVEL INFORMATION
DATE: 07 July 1994 TIME: 1300
DEPTH OF WATER: 5.5 feet below ground surface
(first encountered)

Sample Number/ Analysis/Depth	PID Response Over Background	Blow Count per 6-in Interval __/__/__	Recovery (inches)	Depth (feet)	Lithology	Description/Comments
				0		
	4.1	11/15/12	8/18	3	GW	Drive 2.5 - 4.0 ft. Sandy GRAVEL (GW) with peat and wood, gray (2.5Y 5/1) to black (2.5Y 2.5/1), coarse grained, very minor fines, well graded, polymict, medium dense, moist, rounded. Becomes more coarse downward. No odor or staining.
	0	4/5/6	8/18	4		Drive 4.0 - 5.5 ft. Silty, sandy GRAVEL (GW), olive gray (2.5Y 5/2), gravel to 1/2 inch diameter, well graded, loose, moist, rounded. Contains a 3 inch bed of gravelly SAND (SP), sand is coarse, gravel pea sized, no fines, poorly graded, polymict, rounded. Wet at base and more angular. No odor or staining.
	0	9/9/81	12/18	6	GP	Drive 5.5 - 7.0 ft. Upper 10 inches is a Sandy GRAVEL (GP), gray (2.5Y 6/1), fine to medium sand, gravel fine grained to 3/4 inch diameter, poorly graded to bimodal, polymict, medium dense, wet, subangular to rounded. Bottom 2 inches is a gravelly SAND (SW), blue black (GLEY 2.5/N2.5), sand fine grained, pea gravel, well graded, very dense, wet, rounded. Organic odor, but appears to be natural, no staining. Frozen at the base.
ST05-SB11-7.0 (TPH)				7	SW	TOTAL DEPTH OF BORING: 7.0 ft. below ground surface

SHEET 1 OF 1 FINISH DATE: 07 July 1994 HOUR: 1310

Groundwater Level During Drilling

TETRA TECH

GEOLOGIC LOG OF SOIL BORING
ST05-SB12

PROJECT: Kotzebue LRRS Remedial Investigation
CLIENT/OWNER: AFCEE/USAF
TETRA TECH PROJECT NUMBER: 9676-13
EXPLORATION NUMBER: ST05-SB12
START DATE: 07 July 1994 HOUR: 1400
GROUND SURFACE CONDITIONS: Beach Gravel
CORRESPONDING WELL DESIGNATION: ST05-MW4

CONTRACTOR REPRESENTATIVE: Rick Osgood PG / Kurt Schmierer PG
EXPLORATION CONTRACTOR: Ambler Exploration
OPERATOR: Steve Moore
DRILL TYPE/METHOD: Track-Mounted Hollow Stem Auger
HAMMER WEIGHT & STROKE: 140 lbs. / 30 inches
AUGER SIZE: 4.25" I.D., 7.0" O.D., 8.0" O.D. Bit

WATER LEVEL INFORMATION
DATE: 07 July 1994 TIME: 1435
DEPTH OF WATER: 6.7 feet below ground surface
(first encountered)

Sample Number/ Analysis/Depth	PID Response Over Background	Blow Count per 6-in Interval __/__/__	Recovery (inches)	Depth (feet)	Lithology	Description/Comments
	0	8/11/12	5/18	0–3	GW	Drive 2.5 - 4.0 ft. Sandy, peaty GRAVEL (GW), peat is brown black (5YR 2.5/1), medium to coarse sand, broken gravel clast to 1-1/2 inch, well graded, polymict, medium dense, moist, subangular. No odor or staining.
	0	5/7/8	10/18	4		Drive 4.0 - 5.5 ft. Sandy GRAVEL (GW), gray brown (10YR 5/2) with yellowish hue, sand is fine to coarse, gravel to 1 inch diameter, well graded, gravel is polymict, medium dense, moist, rounded. Indistinct bedding on ~1-1/2 inch thick lenses, with alternating sand rich and gravel rich beds. Minor shell debris in upper portion, green fines (glauconite) in lower portion. No odor or staining.
	0	6/8/9	10/18	5–6		Drive 5.5 - 7.0 ft. Alternating layers of gravelly SAND (SW) and sandy GRAVEL (GP), gray (2.5Y 6/1), moderately well to well bedded (beds 1 - 2 inches thick), gravel is predominately pea sized, sand is fine to medium, gravel poorly graded, sand well graded, gravel polymict, wet at bottom, well rounded to subangular. Reddish hue from sediment clasts. Minor silt in sand at base of the core. No odor or staining.
ST05-SB12-7.0 (TPH)				7	SW/ GP	
	0	7/8/10	6/18	8	SP	Drive 8.0 - 9.5 ft. Gravelly SAND (SP), gray (2.5Y 8/1), medium to coarse sand with some fine sand, gravel pea sized, poorly graded, medium dense, wet (water running out of sampler), rounded, massive. No odor.
ST05-SB12-9.5 (VOCS + SVOCS)				9–10		

Groundwater Level During Drilling

TETRA TECH

GEOLOGIC LOG OF SOIL BORING
STO5-SB12

PROJECT: Kotzebue LRRS Remedial Investigation
CLIENT/OWNER: AFCEE/USAF
TETRA TECH PROJECT NUMBER: 9676-13
EXPLORATION NUMBER: ST05-SB12
START DATE: 07 July 1994 HOUR: 1400
GROUND SURFACE CONDITIONS: Beach Gravel
CORRESPONDING WELL DESIGNATION: ST05-MW4

CONTRACTOR REPRESENTATIVE: Rick Osgood PG / Kurt Schmierer PG
EXPLORATION CONTRACTOR: Ambler Exploration
OPERATOR: Steve Moore
DRILL TYPE/METHOD: Track-Mounted Hollow Stem Auger
HAMMER WEIGHT & STROKE: 140 lbs. / 30 inches
AUGER SIZE: 4.25" I.D., 7.0" O.D., 8.0" O.D. Bit

WATER LEVEL INFORMATION
DATE: 07 July 1994 TIME: 1435
DEPTH OF WATER: 6.7 feet below ground surface
(first encountered)

Sample Number/ Analysis/Depth	PID Response Over Background	Blow Count per 6-in Interval __/__/__	Recovery (inches)	Depth (feet)	Lithology	Description/Comments
	0	3/12/13	6/18	10	SP	Drive 10.0 - 11.5 ft. Upper 3 inches is SAND (SP), gray (2.5Y 6/1), medium to fine grained (fining downward), poorly graded, wet, minor fines. This overlies a GRAVEL (GP), gray (2.5Y 6/1), coarse grained to 1-1/2 inch diameter, gravel polymict, medium dense, wet, rounded. No odor or staining.
				11	GP	
	0	5/6/4	3/18	12	SM	Drive 11.5 - 13.0 ft. No recovery.
	0	5/6/4	9/18	13	CH	Drive 13.0 - 14.5 ft. Upper 1 inch is silty, clayey SAND (SM), with some small wood fragments. This grades downward into a fat CLAY (CH), bluish gray (5B 4/1), with occasional rounded gravel clasts to ~ 1/2 inch diameter, moist to wet, plastic.
				14		TOTAL DEPTH OF BORING: 14.5 ft. below ground surface
				15		
				16		
				17		
				18		
				19		
				20		

FINISH DATE: 07 July 1994 HOUR: 1700

TETRA TECH

GEOLOGIC LOG OF SOIL BORING
ST05-SB13

PROJECT: Kotzebue LRRS Remedial Investigation
CLIENT/OWNER: AFCEE/USAF
TETRA TECH PROJECT NUMBER: 9676-13
EXPLORATION NUMBER: ST05-SB13
START DATE: 09 July 1994 HOUR: 0935
GROUND SURFACE CONDITIONS: Beach Gravel
CORRESPONDING WELL DESIGNATION: ST05-MW5

CONTRACTOR REPRESENTATIVE: Rick Osgood PG / Kurt Schmierer PG
EXPLORATION CONTRACTOR: Ambler Exploration
OPERATOR: Steve Moore
DRILL TYPE/METHOD: Track-Mounted Hollow Stem Auger
HAMMER WEIGHT & STROKE: 140 lbs. / 30 inches
AUGER SIZE: 4.25" I.D., 7.0" O.D., 8.0" O.D. Bit

WATER LEVEL INFORMATION
DATE: 09 July 1994 TIME: 1000
DEPTH OF WATER: 5.7 feet below ground surface
(first encountered)

Sample Number/ Analysis/Depth	PID Response Over Background	Blow Count per 6-in Interval __/__/__	Recovery (inches)	Depth (feet)	Lithology	Description/Comments
	60	6/8/11	14/18	0–2	SW	Drive 1.0 - 2.5 ft. Gravelly SAND (SW), dark reddish gray (2.5YR 5/1), sand coarse, gravel pea sized, well graded, medium dense, moist, subangular to rounded, massive, minor silts and fines. Moist organic rich soil horizon with weed and grass roots developed on the top of core. Distinct petroleum odor. No staining.
	85	5/8/11	10/18	2–4	SW / GW	Drive 2.5 - 4.0 ft. Upper 4 inches is gravelly SAND (SW), gray (7.5YR 5/1), sand fine to medium, gravel 1/2 to 1 inch diameter, well graded, medium dense, dry, subangular to rounded. Below is sandy GRAVEL (GW), dark gray (7.5)YR 4/1), well graded, polymict, medium dense, dry, well rounded. Distinct petroleum odor. No staining.
	376	4/6/7	8/18	4–5	GW	Drive 4.0 - 5.5 ft. Sandy GRAVEL (GW), dark gray (7.5YR 4/1), moderately graded, polymict, medium dense, wet, rounded. Strong petroleum odor and black staining in lower 2.5 inches.
ST05-SB13-5.5 (SVOCS)						
	1,257	4/7/11	12/18	5–6	GW	Drive 5.5 - 7.0 ft. Sandy GRAVEL (GW), very dark gray (7.5YR 3/1), sand coarse, gravel to > 1 inch diameter, well graded, medium dense, wet, predominately rounded to subrounded, trace of fines. Top 12 inches is organic rich Obvious petroleum odor and staining.
ST05-SB13-6.0 (VOCS)						
ST05-SB13-7.0 (TPH)	376	5/40/60	14/18	7–8	SP	Drive 7.0 - 8.5 ft. Gravelly SAND (SP), gray (2.5Y 5/1), moderate to poorly graded, sand is fine to medium grained, gravel is predominately pea size with some to 1/2 inch diameter, polymict, very dense, wet, well rounded. Becomes more sandy at the base, with ~ 10% fines. Some minor shell fragments. Frozen ground at 7.5 ft based on blow counts, likely seasonal. Slight petroleum odor, no staining.
	148	26/21/13	10/18	8–10	GW	Drive 8.5 - 10.0 ft. Sandy GRAVEL (GW), upper 4 inches is very dark gray/black (N3) from petroleum staining, below is dark gray (2.5Y 4/1), sand coarse grained, gravel pea sized to coarse, well graded, dense, frozen, rounded to well rounded, minor silt (<10%). Slight petroleum odor.

Groundwater Level During Drilling

TETRA TECH

GEOLOGIC LOG OF SOIL BORING
ST05-SB13

PROJECT: Kotzebue LRRS Remedial Investigation
CLIENT/OWNER: AFCEE/USAF
TETRA TECH PROJECT NUMBER: 9676-13
EXPLORATION NUMBER: ST05-SB13
START DATE: 09 July 1994 HOUR: 0935
GROUND SURFACE CONDITIONS: Beach Gravel
CORRESPONDING WELL DESIGNATION: ST05-MW5

CONTRACTOR REPRESENTATIVE: Rick Osgood PG / Kurt Schmierer PG
EXPLORATION CONTRACTOR: Ambler Exploration
OPERATOR: Steve Moore
DRILL TYPE/METHOD: Track-Mounted Hollow Stem Auger
HAMMER WEIGHT & STROKE: 140 lbs. / 30 inches
AUGER SIZE: 4.25" I.D., 7.0" O.D., 8.0" O.D. Bit

WATER LEVEL INFORMATION
DATE: 09 July 1994 TIME: 1000
DEPTH OF WATER: 5.7 feet below ground surface
(first encountered)

Sample Number/ Analysis/Depth	PID Response Over Background	Blow Count per 6-in Interval __/__/__	Recovery (inches)	Depth (feet)	Lithology	Description/Comments
	8	11/13/17	7/18	10	GW	Drive 10.0 - 11.5 ft. Sandy GRAVEL (GW), dark gray (N4), sand fine to coarse grained, gravel to 1 inch diameter, very well graded, polymict, medium dense, not frozen, rounded, some minor silt. Becomes more coarse at base, graded bedding. Very slight petroleum odor, no staining.
				11		
	0	9/11/14	9/18		SW	Drive 11.5 - 13.0 ft. Distinct bedding. Top of core is gravelly SAND (SW), dark gray (5Y 4/1), maximum gravel to 3/4 inch, very well graded, medium dense, wet, rounded. Becomes a silty SAND (SP) with white quartz gravel lense, sand fine to medium fine grained, gravel is pea sized, poorly graded. Base is 1 inch thick organic rich silt (OL/OH) with fine sand, black, shell and wood fragments.
				12	SP	
ST05-SB13-12.8 (TPH)	0		11/18	13	OL/OH	Drive 13.0 - 14.5 ft. Top 4 inches SAND (SP), dark gray (5Y 4/1) to very dark gray (N3), sand fine to coarse grained, poorly graded, medium dense, with some silt. Sand fines downward. Below this is a fat CLAY (CH), blue (5B 4/1).
					SP	
				14	CH	TOTAL DEPTH OF BORING: 14.5 ft. below ground surface
				15		
				16		
				17		
				18		
				19		
				20		

FINISH DATE: 09 July 1994 HOUR: 1255

TETRA TECH

GEOLOGIC LOG OF SOIL BORING
STO5-SB14

PROJECT: Kotzebue LRRS Remedial Investigation
CLIENT/OWNER: AFCEE/USAF
TETRA TECH PROJECT NUMBER: 9676-13
EXPLORATION NUMBER: ST05-SB14
START DATE: 09 July 1994 HOUR: 1350
GROUND SURFACE CONDITIONS: Beach Gravel
CORRESPONDING WELL DESIGNATION: ST05-MW6

CONTRACTOR REPRESENTATIVE: Rick Osgood PG / Kurt Schmierer PG
EXPLORATION CONTRACTOR: Ambler Exploration
OPERATOR: Steve Moore
DRILL TYPE/METHOD: Track-Mounted Hollow Stem Auger
HAMMER WEIGHT & STROKE: 140 lbs. / 30 inches
AUGER SIZE: 4.25" I.D., 7.0" O.D., 8.0" O.D. Bit

WATER LEVEL INFORMATION
DATE: 09 July 1994 TIME: 1420
DEPTH OF WATER: 4.5 feet below ground surface
(first encountered)

Sample Number/ Analysis/Depth	PID Response Over Background	Blow Count per 6-in Interval __/__/__	Recovery (inches)	Depth (feet)	Lithology	Description/Comments
	0	3/6/8	9/18	2	GW	Drive 2.5 - 4.0 ft. Sandy GRAVEL (GW), dark gray (7.5YR 4/1), well graded, polymict, medium dense, moist, well rounded. No odor, no staining.
	115	7/14/11	18/18	4		Drive 4.0 - 5.5 ft. Sandy GRAVEL (GW), well graded, wet, well rounded. Obvious petroleum odor and staining.
ST05-SB14-5.5 (VOCS)	231	3/10/48	10/18	6		Drive 5.5 - 7.0 ft. Sandy GRAVEL (GW), very dark gray (N3), sand coarse grained, gravel pea sized, well graded, polymict, very dense, wet, well rounded, massive, homogenous. Base of core frozen. Very strong petroleum odor.
ST05-SB14-7.0 (TPH)	163	65/106/69	16/18	7		Drive 7.0 - 8.5 ft. Silty, sandy GRAVEL (GW), very dark gray (2.5Y 3/1), fine grain sizes from silt through course sand, gravel from pea sized to 1 inch diameter, extremely well graded, very dense, wet, massive. Obvious petroleum odor and staining.
ST05-SB14-8.5 (SVOC)	96	45/65/39	15/18	9		Drive 8.5 - 10.0 ft. Same as above. Oily sheen on water in core barrel.

Groundwater Level During Drilling

TETRA TECH

GEOLOGIC LOG OF SOIL BORING
STO5-SB14

PROJECT: Kotzebue LRRS Remedial Investigation
CLIENT/OWNER: AFCEE/USAF
TETRA TECH PROJECT NUMBER: 9676-13
EXPLORATION NUMBER: ST05-SB14
START DATE: 09 July 1994 HOUR: 1350
GROUND SURFACE CONDITIONS: Beach Gravel
CORRESPONDING WELL DESIGNATION: ST05-MW6

CONTRACTOR REPRESENTATIVE: Rick Osgood PG / Kurt Schmierer PG
EXPLORATION CONTRACTOR: Ambler Exploration
OPERATOR: Steve Moore
DRILL TYPE/METHOD: Track-Mounted Hollow Stem Auger
HAMMER WEIGHT & STROKE: 140 lbs. / 30 inches
AUGER SIZE: 4.25" I.D., 7.0" O.D., 8.0" O.D. Bit

WATER LEVEL INFORMATION
DATE: 09 July 1994 TIME: 1420
DEPTH OF WATER: 4.5 feet below ground surface
(first encountered)

Sample Number/ Analysis/Depth	PID Response Over Background	Blow Count per 6-in Interval ___/___/___	Recovery (inches)	Depth (feet)	Lithology	Description/Comments
	59	7/8/11	7/18	10		Drive 10.0 - 11.5 ft. Silty, Sandy Gravel (GW), dark olive gray (between 5Y 4/1 and 5Y 3/1), well graded, medium dense, wet, rounded. Lower 4 inches becomes silty SAND (SP), fine grained, poorly graded. Some shell fragments in lower portion. Petroleum odor and sheen on sediments.
				11	SP	
	39.5	7/11/14	11/18	12	CL	Drive 11.5 - 13.0 ft. Silty, gravelly CLAY (CL), dark gray (N4) with slight bluish cast (5B 4/1), contains more silt than SB12 or SB13, gravel pea sized (ice rafted dropstones), moist, lean, shears when broken. Slight petroleum odor.
				13		TOTAL DEPTH OF BORING: 13.0 ft. below ground surface
				14		
				15		
				16		
				17		
				18		
				19		
				20		

FINISH DATE: 09 July 1994 HOUR: 1630

TETRA TECH

GEOLOGIC LOG OF SOIL BORING
ST05-SB15

PROJECT: Kotzebue LRRS Remedial Investigation
CLIENT/OWNER: AFCEE/USAF
TETRA TECH PROJECT NUMBER: 9676-13
EXPLORATION NUMBER: ST05-SB15
START DATE: 10 July 1994 HOUR: 0830
GROUND SURFACE CONDITIONS: Beach Gravel
CORRESPONDING WELL DESIGNATION: ST05-MW7

CONTRACTOR REPRESENTATIVE: Rick Osgood PG / Kurt Schmierer PG
EXPLORATION CONTRACTOR: Ambler Exploration
OPERATOR: Steve Moore
DRILL TYPE/METHOD: Track-Mounted Hollow Stem Auger
HAMMER WEIGHT & STROKE: 140 lbs. / 30 inches
AUGER SIZE: 4.25" I.D., 7.0" O.D., 8.0" O.D. Bit

WATER LEVEL INFORMATION
DATE: 10 July 1994 TIME: 0900
DEPTH OF WATER: 5.0 feet below ground surface
(first encountered)

Sample Number/ Analysis/Depth	PID Response Over Background	Blow Count per 6-in Interval __/__/__	Recovery (inches)	Depth (feet)	Lithology	Description/Comments
	12	4/7/7	10/18	3	GW	Drive 3.5 - 5.0 ft. Sandy GRAVEL (GW), gray brown (2.5Y 4/2), sand course grained, gravel pea sized, medium dense, moist, wet at bottom, well rounded. No odor or staining.
ST05-SB15-5.0 (VOC) ST05-SB15-5.5 (TPH)	0	4/6/10	12/18	5		Drive 5.0 - 6.5 ft. Silty, sandy GRAVEL (GW), very dark grayish brown (2.5Y 3/2), ~ 10% silt and fines, well graded, wet, rounded. Some indistinct bedding on ~2 inch intervals.

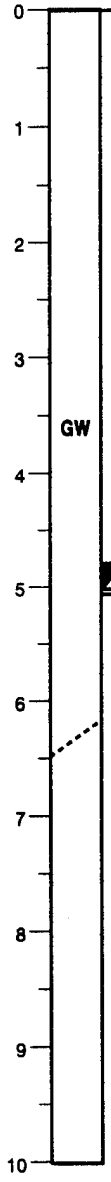

Groundwater Level During Drilling

TETRA TECH

GEOLOGIC LOG OF SOIL BORING
ST05-SB15

PROJECT: Kotzebue LRRS Remedial Investigation
CLIENT/OWNER: AFCEE/USAF
TETRA TECH PROJECT NUMBER: 9676-13
EXPLORATION NUMBER: ST05-SB15
START DATE: 10 July 1994 HOUR: 0830
GROUND SURFACE CONDITIONS: Beach Gravel
CORRESPONDING WELL DESIGNATION: ST05-MW7

CONTRACTOR REPRESENTATIVE: Rick Osgood PG / Kurt Schmierer PG
EXPLORATION CONTRACTOR: Ambler Exploration
OPERATOR: Steve Moore
DRILL TYPE/METHOD: Track-Mounted Hollow Stem Auger
HAMMER WEIGHT & STROKE: 140 lbs. / 30 inches
AUGER SIZE: 4.25" I.D., 7.0" O.D., 8.0" O.D. Bit

WATER LEVEL INFORMATION
DATE: 10 July 1994 TIME: 0900
DEPTH OF WATER: 5.0 feet below ground surface
(first encountered)

Sample Number/ Analysis/Depth	PID Response Over Background	Blow Count per 6-in Interval ___/___/___	Recovery (inches)	Depth (feet)	Lithology	Description/Comments
	0	6/8/10	7/18	10	OL/OH	Drive 10.0 - 11.5 ft. Top 2 inches of core is a woody PEAT (OL/OH), brown (10YR 2/2), very high organic content, wet. Underlain by a SAND (SP), gray (N5), sand very fine grained, poorly graded, medium dense wet. Lower 4 inches sandy GRAVEL (GP), sand fraction ~ 20% and coarse grained, gravel primarily pea sized, poorly graded, polymict, medium dense, wet, rounded.
					SP	
				11	GP	
	0	8/8/12	11/18		OL/OH	Drive 11.5 - 13.0 ft. Top of core is a woody PEAT (OL/OH), very dark brown (7.5YR 2.5/1-2), high organic content, very little sediment, wet. Middle of core is a sandy GRAVEL (GW) with minor fines (~5%), gray (N4) to black (N25), sand fine to very fine grained, gravel pea sized, well graded, polymict, medium dense, wet, well rounded. Basal 3 inches of core is silty CLAY (CL), dark bluish gray (5B 4/1), moist.
				12	GW	
					CL	
				13		TOTAL DEPTH OF BORING: 13.0 ft. below ground surface
				14		
				15		
				16		
				17		
				18		
				19		
				20		

FINISH DATE: 10 July 1994 HOUR: 1310

TETRA TECH

GEOLOGIC LOG OF SOIL BORING
ST05-SB16

PROJECT: Kotzebue LRRS Remedial Investigation
CLIENT/OWNER: AFCEE/USAF
TETRA TECH PROJECT NUMBER: 9676-13
EXPLORATION NUMBER: ST05-SB16
START DATE: 10 July 1994 HOUR: 1330
GROUND SURFACE CONDITIONS: Beach Gravel
CORRESPONDING WELL DESIGNATION: ST05-MW8

CONTRACTOR REPRESENTATIVE: Rick Osgood PG / Kurt Schmierer PG
EXPLORATION CONTRACTOR: Ambler Exploration
OPERATOR: Steve Moore
DRILL TYPE/METHOD: Track-Mounted Hollow Stem Auger
HAMMER WEIGHT & STROKE: 140 lbs. / 30 inches
AUGER SIZE: 4.25" I.D., 7.0" O.D., 8.0" O.D. Bit

WATER LEVEL INFORMATION
DATE: 10 April 1994 TIME: 1400
DEPTH OF WATER: 4.5 feet below ground surface
(first encountered)

Sample Number/ Analysis/Depth	PID Response Over Background	Blow Count per 6-in Interval __/__/__	Recovery (inches)	Depth (feet)	Lithology	Description/Comments
				0		
				1		
				2		
	401	4/6/10	8/18	3	GW	Drive 2.5 - 4.0 ft. Sandy GRAVEL (GW), dark gray brown (10YR 4/2), minor fines (silt), well graded, medium dense, moist, massive. Strong petroleum odor, slight staining.
ST05-SB16-4.0 (VOC)	244	4/10/45	12/18	4	SP	Drive 4.0 - 5.5 ft. Gravelly SAND (SP), dark gray (N4), sand mostly medium to fine grained some coarse, gravel pea sized to 1 inch diameter, moderately to poorly graded, dense, wet, well rounded. Fines downward. Strong petroleum odor and visible staining in upper portion of core.
				5		Drive 5.5 - 7.0 ft. Difficult drilling, frozen ground, water will not rise in borehole.
ST05-SB16-5.5 (TPH + SVOC)				6		
				7		
	171	64/97/45	15/18	8	GW	Drive 7.5 - 9.0 ft. Silty, sandy GRAVEL (GW), very dark black (2.5Y 2/1) to olive gray (5Y 5/1.5), sand medium to coarse, gravel to 1 inch diameter, well graded, very dense, moist. Bottom 6 inches is SAND (SW), dark gray (2.5Y 4/1) to very dark gray (2.5Y 3/1), sand fine through coarse grained, moderately well graded, very dense, moist. Measured temperature in core is 0°C. Strong petroleum odor but no staining.
ST05-SB16-8.5 (TPH)				9	SW	
	0	22/46/108	16/18	10		Drive 10.0 - 11.5 ft. Silty SAND (SW), dark grayish brown (2.5Y 4/1) to olive brown (2.5Y 4/2), sand fine to very fine grained, moderately well graded, very dense, occasional shell fragments. Core frozen throughout. Very high water content as core melts. No petroleum odor or staining.
				11		

TOTAL DEPTH OF BORING: 11.5 ft. below ground surface

SHEET 1 OF 1

FINISH DATE: 10 July 1994 HOUR: 1603

Groundwater Level During Drilling

TETRA TECH

GEOLOGIC LOG OF SOIL BORING
ST05-SB17

PROJECT: Kotzebue LRRS Remedial Investigation
CLIENT/OWNER: AFCEE/USAF
TETRA TECH PROJECT NUMBER: 9676-13
EXPLORATION NUMBER: ST05-SB17
START DATE: 11 July 1994 HOUR: 1040
GROUND SURFACE CONDITIONS: Beach Gravel
CORRESPONDING WELL DESIGNATION: ST05-MW9

CONTRACTOR REPRESENTATIVE: Rick Osgood PG / Kurt Schmierer PG
EXPLORATION CONTRACTOR: Ambler Exploration
OPERATOR: Steve Moore
DRILL TYPE/METHOD: Track-Mounted Hollow Stem Auger
HAMMER WEIGHT & STROKE: 140 lbs. / 30 inches
AUGER SIZE: 4.25" I.D., 7.0" O.D., 8.0" O.D. Bit

WATER LEVEL INFORMATION
DATE: 11 July 1994 TIME: 1110
DEPTH OF WATER: 5.0 feet below ground surface
(first encountered)

Sample Number/ Analysis/Depth	PID Response Over Background	Blow Count per 6-in Interval __/__/__	Recovery (inches)	Depth (feet)	Lithology	Description/Comments
	5.4	2/3/4	6/18	0–3	GW	Drive 2.5 - 4.0 ft. Sandy GRAVEL (GW), very dark gray (2.5Y 3/1), primarily coarse sand, gravel pea sized, well graded, loose, moist, well rounded. Some shell fragments and minor fines. Petroleum odor is evident, no staining.
ST05-SB17-5.0 (VOC + TPH)	256	4/9/20	2/18	4–5	SP	Drive 4.0 - 5.5 ft. Silty, gravelly SAND (SP), sand fine to coarse grained, gravel to pea size, poorly graded, bedding present (1 to 2 inch thick bedding layers), medium dense, moist to wet, coarsens downward. Frozen below 5.0 ft. Strong petroleum odor, and dark petroleum staining.
ST05-SB17-6.5 (SVOCS)	~57	4/11/60	11/18	5–7	GW / SP	Drive 5.5 - 7.0 ft. Sandy GRAVEL (GW), sand coarse grained, gravel pea sized, well graded, well rounded. Strong petroleum odor, but no staining. Below 6.0 ft grades into SAND (SP), gray (5Y 4.1/1), sand coarse grained, poorly graded, minor fine sand, silt, and shell fragments. Bottom 2 inches of core is sandy GRAVEL (GW), well graded, with minor silt.
ST05-SB17-10.0 (TPH)	~27	33/67/105	11/18	7–10	GW / SW	Drive 9.0 - 10.2 ft. Upper 2 inches is silty, sandy GRAVEL (GW), dark gray brown (2.5Y 3.5/2), sand fine to medium grained, gravel to 1 inch diameter, bimodal, moderately well graded, very dense, rounded. Entire core is frozen. Below 9.5 ft becomes a gravelly SAND (SW), sand very fine to medium grained, gravel pea sized, well graded. Very slight petroleum odor and some staining.
				10		TOTAL DEPTH OF BORING: 10.2 ft. below ground surface

SHEET 1 OF 1 FINISH DATE: 11 July 1994 HOUR: 1445 Groundwater Level During Drilling

TETRA TECH

GEOLOGIC LOG OF SOIL BORING
ST05-SB18

PROJECT: Kotzebue LRRS Remedial Investigation
CLIENT/OWNER: AFCEE/USAF
TETRA TECH PROJECT NUMBER: 9676-13
EXPLORATION NUMBER: ST05-SB18
START DATE: 11 July 1994 HOUR: 1500
GROUND SURFACE CONDITIONS: Beach Gravel
CORRESPONDING WELL DESIGNATION: NA

CONTRACTOR REPRESENTATIVE: Rick Osgood PG / Kurt Schmierer PG
EXPLORATION CONTRACTOR: Ambler Exploration
OPERATOR: Steve Moore
DRILL TYPE/METHOD: Track-Mounted Hollow Stem Auger
HAMMER WEIGHT & STROKE: 140 lbs. / 30 inches
AUGER SIZE: 2.25" I.D., 5.0" O.D., 5.0" O.D. Bit

WATER LEVEL INFORMATION
DATE: 11 April 1994 TIME: 1530
DEPTH OF WATER: 7.0 feet below ground surface
(first encountered)

Sample Number/ Analysis/Depth	PID Response Over Background	Blow Count per 6-in Interval __/__/__	Recovery (inches)	Depth (feet)	Lithology	Description/Comments
				0	GW	
	0	8/4/5	12/18	2	ML	Drive 2.5 - 4.0 ft. Interbedded silty sandy GRAVEL (GW) and clayey SILT (ML). Gravel grayish brown (2.5Y 4/2), to ~ 1 inch diameter, well graded, loose, moist, rounded. Silt mottled gray (2.5Y 5/1) to rust red or reddish gray (10YR 4/4), massive, moist, roughly 25% clay, with some fine root hairs. No odors or staining.
	0	4/8/11	9/18	4	GW	Drive 4.0 - 5.5 ft. Sandy GRAVEL (GW), olive brown (2.5Y 4/3), sand fine to coarse grained, gravel to ~ 1 inch diameter, sand/gravel admixture ~ 50/50, very well graded, massive, slightly moist, shell fragments. No odors or staining.
	0	4/5/9	8/18	6		Drive 5.5 - 7.0 ft. Sandy GRAVEL (GW) with minor silt, olive brown (2.5Y 4/3), ~ 80% gravel, very well graded, medium dense, rounded, polymict, wet at base. No odors or staining.
	0	6/16/31	10/18	7		Drive 7.0 - 8.5 ft. Sandy GRAVEL (GW) with trace fines, olive brown (2.5Y 4/3), sand is mainly coarse, some medium and fine gravel, ~ 80% is pea gravel to 1 inch diameter, well graded, dense, polymict, wet, rounded. No odors or staining.
ST05-SB18-8.5 (TPH)				8		TOTAL DEPTH OF BORING: 8.5 ft. below ground surface
				9		
				10		
				11		

SHEET 1 OF 1

FINISH DATE: 11 July 1994 HOUR: 1555

Groundwater Level During Drilling

TETRA TECH

GEOLOGIC LOG OF SOIL BORING
ST05-SB19

PROJECT: Kotzebue LRRS Remedial Investigation
CLIENT/OWNER: AFCEE/USAF
TETRA TECH PROJECT NUMBER: 9676-13
EXPLORATION NUMBER: ST05-SB19
START DATE: 12 July 1994 HOUR: 0955
GROUND SURFACE CONDITIONS: Beach Gravel
CORRESPONDING WELL DESIGNATION: NA

CONTRACTOR REPRESENTATIVE: Rick Osgood PG / Kurt Schmierer PG
EXPLORATION CONTRACTOR: Ambler Exploration
OPERATOR: Steve Moore
DRILL TYPE/METHOD: Track-Mounted Hollow Stem Auger
HAMMER WEIGHT & STROKE: 140 lbs. / 30 inches
AUGER SIZE: 2.25" I.D., 5.0" O.D., 5.0" O.D. Bit

WATER LEVEL INFORMATION
DATE: 12 July 1994 TIME: 1030
DEPTH OF WATER: ~6.0 feet below ground surface
(first encountered)

Sample Number/ Analysis/Depth	PID Response Over Background	Blow Count per 6-in Interval __/__/__	Recovery (inches)	Depth (feet)	Lithology	Description/Comments
	0	4/5/6	11/18	0–3	GW	Drive 2.5 - 4.0 ft. Sandy GRAVEL (GW), black brown (2.5Y 2.5/1), sand medium to coarse grained, gravel to 1-1/2 inch diameter, well graded, polymict, loose, moist, rounded. Variable fines and indistinct bedding. Minor organic content in upper core. No odor or staining.
	0	5/7/10	11/18	4–6	GW	Drive 4.5 - 6.0 ft. Sandy GRAVEL (GW), very dark gray brown (10YR 3/2.5), sand fine to coarse grained, gravel to 1 inch diameter, very well graded, polymict, medium dense, very moist, rounded. No odor or staining.
ST05-SB19-6.0 (TPH)				6	GW	

0 1 2 3 4 5 6 7 8 9 10

Groundwater Level During Drilling

TETRA TECH

GEOLOGIC LOG OF SOIL BORING
ST05-SB19

PROJECT: Kotzebue LRRS Remedial Investigation
CLIENT/OWNER: AFCEE/USAF
TETRA TECH PROJECT NUMBER: 9676-13
EXPLORATION NUMBER: ST05-SB19
START DATE: 12 July 1994 HOUR: 0955
GROUND SURFACE CONDITIONS: Beach Gravel
CORRESPONDING WELL DESIGNATION: NA

CONTRACTOR REPRESENTATIVE: Rick Osgood PG / Kurt Schmierer PG
EXPLORATION CONTRACTOR: Ambler Exploration
OPERATOR: Steve Moore
DRILL TYPE/METHOD: Track-Mounted Hollow Stem Auger
HAMMER WEIGHT & STROKE: 140 lbs. / 30 inches
AUGER SIZE: 2.25" I.D., 5.0" O.D., 5.0" O.D. Bit

WATER LEVEL INFORMATION
DATE: 12 July 1994 TIME: 1030
DEPTH OF WATER: ~6.0 feet below ground surface
(first encountered)

Sample Number/ Analysis/Depth	PID Response Over Background	Blow Count per 6-in Interval __/__/__	Recovery (inches)	Depth (feet)	Lithology	Description/Comments
				10		
				11		
	0	32/18/9	18/18	12	GW	Drive 12.0 - 13.5 ft. Silty, sandy GRAVEL (GW), gray (10YR 5.5/1) to olive gray (2.5Y 5/1), sand coarse to medium grained, gravel is pea sized to 1 inch diameter, polymict, medium dense, wet, rounded. Woody peat present at 12.2 ft. Slight petroleum odor, no visible staining.
				13		
	0	3/5/7	6/18		CL	Drive 13.5 - 15.0 ft. Gravelly, silty CLAY (CL), bluish gray (5B 4.5/1), ~30% silt, stiff, wet, massive, not plastic. Gravel is pea sized and well rounded.
				14		
(archive soil sample)	0	3/4/7	8/18	15		Drive 15.0 - 16.5 ft. Silty CLAY (CL), same as above but more sandy. No odor or staining.
				16		
	0	4/10/14	11/18		ML	Drive 16.5 - 18.0 ft. Sandy SILT (ML), very dark gray with bluish cast (N3). ~30% clay, sand (~1%) medium to coarse grained, very stiff, moist, massive, not plastic. No odors or staining.
				17		
	0	9/13/32	9/18	18		Drive 18.0 - 19.5 ft. Sandy SILT (ML), same as above.
				19		
(archive soil sample)	0	10/14/17	11/18			Drive 19.5 - 21.0 ft. Sandy SILT (ML), same as above, decreasing sand and clay components, ice rafted gravel dropstones.
				20		

TETRA TECH

GEOLOGIC LOG OF SOIL BORING
STO5-SB19

PROJECT: Kotzebue LRRS Remedial Investigation
CLIENT/OWNER: AFCEE/USAF
TETRA TECH PROJECT NUMBER: 9676-13
EXPLORATION NUMBER: ST05-SB19
START DATE: 12 July 1994 HOUR: 0955
GROUND SURFACE CONDITIONS: Beach Gravel
CORRESPONDING WELL DESIGNATION: NA

CONTRACTOR REPRESENTATIVE: Rick Osgood PG / Kurt Schmierer PG
EXPLORATION CONTRACTOR: Ambler Exploration
OPERATOR: Steve Moore
DRILL TYPE/METHOD: Track-Mounted Hollow Stem Auger
HAMMER WEIGHT & STROKE: 140 lbs. / 30 inches
AUGER SIZE: 2.25" I.D., 5.0" O.D., 5.0" O.D. Bit

WATER LEVEL INFORMATION
DATE: 12 July 1994 TIME: 1030
DEPTH OF WATER: ~6.0 feet below ground surface
(first encountered)

Sample Number/ Analysis/Depth	PID Response Over Background	Blow Count per 6-in Interval __/__/__	Recovery (inches)	Depth (feet)	Lithology	Description/Comments
				20		
				21		
(archive soil sample)				22	ML	Drive 22.0 - 23.5 ft. Sandy SILT (ML), same as above with larger gravel dropstones (to 1-1/2 inch diameter).
				23		TOTAL DEPTH OF BORING: 23.5 ft. below ground surface
				24		
				25		
				26		
				27		
				28		
				29		
				30		

FINISH DATE: 12 July 1994 HOUR: 1437

TETRA TECH

GEOLOGIC LOG OF SOIL BORING
STO5-SB20

PROJECT: Kotzebue LRRS Remedial Investigation
CLIENT/OWNER: AFCEE/USAF
TETRA TECH PROJECT NUMBER: 9676-13
EXPLORATION NUMBER: ST05-SB20
START DATE: 12 July 1994 HOUR: 1450
GROUND SURFACE CONDITIONS: Beach Gravel
CORRESPONDING WELL DESIGNATION: NA

CONTRACTOR REPRESENTATIVE: Rick Osgood PG / Kurt Schmierer PG
EXPLORATION CONTRACTOR: Ambler Exploration
OPERATOR: Steve Moore
DRILL TYPE/METHOD: Track-Mounted Hollow Stem Auger
HAMMER WEIGHT & STROKE: 140 lbs. / 30 inches
AUGER SIZE: 2.25" I.D., 5.0" O.D., 5.0" O.D. Bit

WATER LEVEL INFORMATION
DATE: 12 July 1994 TIME: 1525
DEPTH OF WATER: 5.0 feet below ground surface
(first encountered)

Sample Number/ Analysis/Depth	PID Response Over Background	Blow Count per 6-in Interval __/__/__	Recovery (inches)	Depth (feet)	Lithology	Description/Comments
				0		
				1		
				2		
	0	11/2/4	6/18	3	GW	Drive 2.5 - 4.0 ft. Sandy GRAVEL (GW), sand medium grained, gravel to 1-1/4 inch diameter, well graded, loose, polymict, moist, well rounded. No odor, no staining.
	30	5/7/53	12/18	4	SW	Drive 4.0 - 5.5 ft. Gravelly SAND (SW), dark grayish brown (2.5Y 5/2.5), sand medium to coarse grained, gravel pea sized, ~5% silt, well graded, very dense, wet, well rounded. No staining but faint petroleum odor near base of core.
				5		▼
	19	2/8/83	15/18			Drive 5.5 - 7.0 ft. Gravelly SAND (SW), light olive brown (2.5Y 5/2.5), sand is fine to coarse grained, gravel is pea sized, <5% silt, very well graded, very dense, wet, well rounded. Oily sheen on water in sampler.
				6		
ST05-SB20-6.1 (SVOC)						
ST05-SB20-6.7 (TPH)						
ST05-SB20-7.0 (VOC)				7		TOTAL DEPTH OF BORING: 7.0 ft. below ground surface
				8		
				9		
				10		
				11		

SHEET 1 OF 1 FINISH DATE: 12 July 1994 HOUR: 1610 ▼ Groundwater Level During Drilling

TETRA TECH

GEOLOGIC LOG OF SOIL BORING
ST05-SB21

PROJECT: Kotzebue LRRS Remedial Investigation
CLIENT/OWNER: AFCEE/USAF
TETRA TECH PROJECT NUMBER: 9676-13
EXPLORATION NUMBER: ST05-SB21
START DATE: 13 July 1994 HOUR: 1635
GROUND SURFACE CONDITIONS: Beach Gravel
CORRESPONDING WELL DESIGNATION: NA

CONTRACTOR REPRESENTATIVE: Rick Osgood PG / Kurt Schmierer PG
EXPLORATION CONTRACTOR: Ambler Exploration
OPERATOR: Steve Moore
DRILL TYPE/METHOD: Track-Mounted Hollow Stem Auger
HAMMER WEIGHT & STROKE: 140 lbs. / 30 inches
AUGER SIZE: 2.25" I.D., 5.0" O.D., 5.0" O.D. Bit

WATER LEVEL INFORMATION
DATE: 13 July 1994 TIME: 1705
DEPTH OF WATER: 5.5 feet below ground surface
(first encountered)

Sample Number/ Analysis/Depth	PID Response Over Background	Blow Count per 6-in Interval __/__/__	Recovery (inches)	Depth (feet)	Lithology	Description/Comments
	24	12/7/8	9/18	0	GW	Drive 2.5 - 4.0 ft. Sandy GRAVEL (GW), very dark grayish brown (10YR 3/2) to grayish brown (10YR 5/1.5), sand is fine to medium grained, gravel to 1 inch diameter, well graded, medium dense, moist, rounded. High organic content in upper core. No odor. Some iron staining.
		4/6/8	8/18	4		Drive 4.0 - 5.5 ft. Sandy GRAVEL (GW), gray (10YR 4/1), sand medium grained, gravel to 5/8 inch diameter, well graded, medium dense, moist, rounded. Becomes better graded with depth. Petroleum odor and very dark brown (7.5YR 2.5/1) residual petroleum product in sand ~1/2 inch thick.
	104	5/8/8	13/18	5		Drive 5.5 - 7.0 ft. Sandy GRAVEL (GW), dark gray with olive tint (5Y 4/1), sand fine to coarse grained, gravel to pea size, well graded, medium dense, wet, rounded, trace of silt. Distinct petroleum odor and staining near base.
	90	5/9/28	15/18	7	SW	Drive 7.0 - 8.5 ft. Gravelly SAND (SW), dark gray (N4), sand from fine to coarse grained, gravel pea sized to 3/4 inch diameter, very well graded, dense, wet, massive, no bedding. No fines. Strong petroleum odor and staining near base.
ST05-SB21-8.5 (TPH)				8		TOTAL DEPTH OF BORING: 8.5 ft. below ground surface
				9		
				10		
				11		

SHEET 1 OF 1

FINISH DATE: 12 July 1994 HOUR: 1726

Groundwater Level During Drilling

TETRA TECH

GEOLOGIC LOG OF SOIL BORING
ST05-SB22

PROJECT: Kotzebue LRRS Remedial Investigation
CLIENT/OWNER: AFCEE/USAF
TETRA TECH PROJECT NUMBER: 9676-13
EXPLORATION NUMBER: ST05-SB22
START DATE: 13 July 1994 HOUR: 0900
GROUND SURFACE CONDITIONS: Beach Gravel
CORRESPONDING WELL DESIGNATION: NA

CONTRACTOR REPRESENTATIVE: Rick Osgood PG / Kurt Schmierer PG
EXPLORATION CONTRACTOR: Ambler Exploration
OPERATOR: Steve Moore
DRILL TYPE/METHOD: Track-Mounted Hollow Stem Auger
HAMMER WEIGHT & STROKE: 140 lbs. / 30 inches
AUGER SIZE: 4.25" I.D., 7.0" O.D., 8.0" O.D. Bit

WATER LEVEL INFORMATION
DATE: 13 July 1994 TIME:
DEPTH OF WATER: ~8.0 feet below ground surface
(first encountered)

Sample Number/ Analysis/Depth	PID Response Over Background	Blow Count per 6-in Interval __/__/__	Recovery (inches)	Depth (feet)	Lithology	Description/Comments
	0	2/6/7	8/18	0-3	SW	Drive 2.5 - 4.0 ft. Gravelly SAND (SW), grayish brown (2.5Y 5/2), sand fine to coarse grained, gravel to 1 inch diameter, well graded, medium dense, dry, rounded. Lower portion of core contains ~ 1 cm thick layer of organic silt, very dusky red (2.5YR 2.5/3), moist. No staining or odors.
	0	5/7/7	8/18	4-5	GW	Drive 4.0 - 5.5 ft. Sandy GRAVEL (GW), grayish brown (2.5Y 5/2), sand fine to coarse grained, gravel to 1 inch diameter, very well graded, medium dense, dry to barely moist, rounded. Trace of fines, sand 25-35% of total. No staining or odors.
	0	5/7/8	10/18	5-6	GW	Drive 5.5 - 7.0 ft. Sandy GRAVEL (GW), same but becomes dark grayish brown with olive tint (2.5Y 3.5/2), increasing fines but still <5%.
ST05-SB22-8.5 (TPH)	0	9/15/31	13/18	7-8	GW	Drive 7.0 - 8.5 ft. Sandy GRAVEL (GW), dark gray brown with olive tint (2.5Y 3.5/2), sand medium to coarse grained, gravel pea size to 1/4 inch diameter, well graded, polymict, dense, wet, subangular to rounded. Frozen at base. No odors or staining.

Groundwater Level During Drilling

TETRA TECH

GEOLOGIC LOG OF SOIL BORING
ST05-SB22

PROJECT: Kotzebue LRRS Remedial Investigation
CLIENT/OWNER: AFCEE/USAF
TETRA TECH PROJECT NUMBER: 9676-13
EXPLORATION NUMBER: ST05-SB22
START DATE: 13 July 1994 HOUR: 0900
GROUND SURFACE CONDITIONS: Beach Gravel
CORRESPONDING WELL DESIGNATION: NA

CONTRACTOR REPRESENTATIVE: Rick Osgood PG / Kurt Schmierer PG
EXPLORATION CONTRACTOR: Ambler Exploration
OPERATOR: Steve Moore
DRILL TYPE/METHOD: Track-Mounted Hollow Stem Auger
HAMMER WEIGHT & STROKE: 140 lbs. / 30 inches
AUGER SIZE: 4.25" I.D., 7.0" O.D., 8.0" O.D. Bit

WATER LEVEL INFORMATION
DATE: 13 July 1994 TIME:
DEPTH OF WATER: ~8.0 feet below ground surface
(first encountered)

Sample Number/ Analysis/Depth	PID Response Over Background	Blow Count per 6-in Interval ___/___/___	Recovery (inches)	Depth (feet)	Lithology	Description/Comments
	0	75/102/107	16/18	10 11 12	GW	Drive 12.0 - 13.5 ft. Sandy GRAVEL (GW), grayish brown (7.5YR 3.5/1) to olive gray (7.5YR 5/1.5), sand fine to coarse grained, gravel pea size to 1-1/2 inch diameter, well graded, polymict, very dense, wet, frozen, well rounded. Organic rich layer (wooly peat) 1-1/2 inch thick near top. Minor organics and silt throughout, core fines upward. No staining, no odors.
	0	57/49/63	14/18	13 14	ML	Drive 13.5 - 15.0 ft. Sandy GRAVEL (GW), gray (2.5Y 5/1), sand very fine to fine, gravel to 1 inch diameter, well graded, polymict, very dense, frozen, well rounded. Peat layer with wood fragments in upper portion. Bottom 7 inches is sandy, gravelly SILT (ML), dark brown (N3), sand very fine grained, markedly bimodal, gravel pea size to 1-1/4 inch diameter and well rounded, hard, frozen, not plastic. No odors or staining.
ST05-SB22-16to17 (archive for grainsize/ permeability)	0	48/103/99	18/21	15 16	MH	Drive 15.5 - 17.25 ft. Clayey SILT (MH), dark bluish gray (5Y 4/1), hard, frozen. Gradational contact with sandy gravel above. No odor or staining.
				17 18 19 20		TOTAL DEPTH OF BORING: 17.25 ft. below ground surface

SHEET 2 OF 2

FINISH DATE: 13 July 1994 HOUR: 1207

TETRA TECH

GEOLOGIC LOG OF SOIL BORING
ST05-SB23

PROJECT: Kotzebue LRRS Remedial Investigation
CLIENT/OWNER: AFCEE/USAF
TETRA TECH PROJECT NUMBER: 9676-13
EXPLORATION NUMBER: ST05-SB23
START DATE: 13 July 1994 HOUR: 1255
GROUND SURFACE CONDITIONS: Beach Gravel
CORRESPONDING WELL DESIGNATION: NA

CONTRACTOR REPRESENTATIVE: Rick Osgood PG / Kurt Schmierer PG
EXPLORATION CONTRACTOR: Ambler Exploration
OPERATOR: Steve Moore
DRILL TYPE/METHOD: Track-Mounted Hollow Stem Auger
HAMMER WEIGHT & STROKE: 140 lbs. / 30 inches
AUGER SIZE: 2.25" I.D., 5.0" O.D., 5.0" O.D. Bit

WATER LEVEL INFORMATION
DATE: 13 April 1994 TIME: 1325
DEPTH OF WATER: ~7.0 feet below ground surface
(first encountered)

Sample Number/ Analysis/Depth	PID Response Over Background	Blow Count per 6-in Interval __/__/__	Recovery (inches)	Depth (feet)	Lithology	Description/Comments
	0	5/6/8	13/18	2.5 - 4.0	GW	Drive 2.5 - 4.0 ft. Sandy GRAVEL (GW), very dark brownish gray (5YR 3/1), sand fine to coarse grained, gravel to 1-1/2 inch diameter, moderately to very well graded, some bedding apparent, medium dense, dry to moist, rounded. No odors or staining.
	0	5/7/7	12/18	5.0 - 6.5		Drive 5.0 - 6.5 ft. Sandy GRAVEL (GW), grayish olive brown (2.5Y 4/2), sand fine to medium grained, gravel pea sized to 1/2 inch diameter, well graded, medium dense, slightly moist drys quickly, rounded. Overall moderate bedding. No odor or staining.
	218	5/7/11	10/18	6.5 - 8.0		Drive 6.5 - 8.0 ft. Sandy GRAVEL (GW), dark olive gray (2.5Y 4/1), sand medium to coarse grained, gravel pea sized to 1/2 inch diameter, well graded, medium dense, moist to wet, well rounded. Slight petroleum odor but no staining.
ST05-SB23-8.0 (TPH)				8		TOTAL DEPTH OF BORING: 8.0 ft. below ground surface

SHEET 1 OF 1 FINISH DATE: 13 July 1994 HOUR: 1340

Groundwater Level During Drilling

TETRA TECH

GEOLOGIC LOG OF SOIL BORING
ST05-SB24

PROJECT: Kotzebue LRRS Remedial Investigation
CLIENT/OWNER: AFCEE/USAF
TETRA TECH PROJECT NUMBER: 9676-13
EXPLORATION NUMBER: ST05-SB24
START DATE: 13 July 1994 HOUR: 1400
GROUND SURFACE CONDITIONS: Beach Gravel
CORRESPONDING WELL DESIGNATION: NA

CONTRACTOR REPRESENTATIVE: Rick Osgood PG / Kurt Schmierer PG
EXPLORATION CONTRACTOR: Ambler Exploration
OPERATOR: Steve Moore
DRILL TYPE/METHOD: Track-Mounted Hollow Stem Auger
HAMMER WEIGHT & STROKE: 140 lbs. / 30 inches
AUGER SIZE: 2.25" I.D., 5.0" O.D., 5.0" O.D. Bit

WATER LEVEL INFORMATION
DATE: 13 July 1994 TIME: 1430
DEPTH OF WATER: 7.0 feet below ground surface
(first encountered)

Sample Number/ Analysis/Depth	PID Response Over Background	Blow Count per 6-in Interval __/__/__	Recovery (inches)	Depth (feet)	Lithology	Description/Comments
				0		
	8.2	5/8/8	14/18	3	GW	Drive 2.5 - 4.0 ft. Sandy GRAVEL (GW), grayish brown (10YR 5/2), gravel pea sized to 1 inch diameter, well graded, medium dense, dry to moist, rounded. Moderately high organic content near top of core (peaty with wood fragments). Very slight petroleum odor near top of core, no staining.
	104	4/6/8	14/18	5		Drive 5.0 - 6.5 ft. Sandy GRAVEL (GW), gray with slight olive tint (10YR 4.5/1), sand is medium grained, gravel pea size to 3/4 inch diameter, moderately well graded, loose, moist, well rounded. A very dark red (2.5YR 2.5/2.5) woody organic layer (1-1/2 inch thick) is present in the upper 6 inches of the core. The lower 6 inches is a clean SAND (SP), dark gray with olive tint (2.5Y 4/1), sand fine to medium grained, poorly graded, medium dense, very moist, rounded. Little or no silt. Petroleum odor but no staining.
				6	SP	
	97	6/8/10	13/18	7	GW	Drive 6.5 - 8.0 ft. Sandy GRAVEL (GW), dark gray (2.5Y 4/1) to very dark gray (2.5Y 3/1), sand fine to coarse grained, gravel pea size to 3/8 inch diameter, well graded, medium dense, wet, well rounded. Strong petroleum odor, but no staining.
ST05-SB24-8.0 (TPH)						
				8		TOTAL DEPTH OF BORING: 8.0 ft. below ground surface
				9		
				10		
				11		

SHEET 1 OF 1 FINISH DATE: 13 July 1994 HOUR: 1446 Groundwater Level During Drilling

TETRA TECH

GEOLOGIC LOG OF SOIL BORING
AOC4-SB7

PROJECT: Kotzebue LRRS Remedial Investigation
CLIENT/OWNER: AFCEE/USAF
TETRA TECH PROJECT NUMBER: 9676-13
EXPLORATION NUMBER: AOC4-SB7
START DATE: 26 July 1994 HOUR: 1017
GROUND SURFACE CONDITIONS: Gravel Fill
CORRESPONDING WELL DESIGNATION: NA

CONTRACTOR REPRESENTATIVE: Rick Osgood PG / Kurt Schmierer PG
EXPLORATION CONTRACTOR: Ambler Exploration
OPERATOR: Steve Moore
DRILL TYPE/METHOD: Track-Mounted Hollow Stem Auger
HAMMER WEIGHT & STROKE: 140 lbs. / 30 inches
AUGER SIZE: 2.25" I.D., 5.0" O.D., 5.0" O.D. Bit

WATER LEVEL INFORMATION
DATE: 26 July 1994 TIME: 1145
DEPTH OF WATER: not encountered
(first encountered)

Sample Number/ Analysis/Depth	PID Response Over Background	Blow Count per 6-in Interval __/__/__	Recovery (inches)	Depth (feet)	Lithology	Description/Comments
				0		
				1		
				2	Fill	
	0	8/15/19	16/18	3		Drive 2.5 - 4.0 ft. Above 3.5 ft is silty GRAVEL (Fill), dark gray (N3.5), ~ 30% silt binding gravel (65%), well graded, medium dense, slightly moist, gravel angular (broken) to rounded. Below 3.5 ft is sandy GRAVEL (GW), very dark gray (2.5Y 3.5/1) predominately fine to medium sand, some coarse sand (sand ~ 35%), gravel 1/2 to 3/4 inch diameter, no granules or pea gravel, well graded, dense, slightly moist, rounded, bimodal. No odors or staining.
				4	GW	
	0	2/3/5	12/18		SW	Drive 4.0 - 5.5 ft. Well bedded. Upper 0.2 ft is SAND with gravel (SW), dark gray (2.5Y 4/1), sand fine to coarse grained, pea gravel to ~ 1/2 inch diameter, well graded, slightly moist, well rounded except fine to medium sand is subangular. Next 0.1 ft is Woody PEAT (OL/OH), 100% organic, no sediment, organic odor. No odors or staining. Next 0.3 ft is silty CLAY (CL) with very fine sand, dark olive gray (5Y 3/2), ~ 35% silt, medium stiff, moist, moderately plastic. Bottom 0.1 ft is sandy SILT (ML) with some clay, very dark brown (10YR 2/2), minor organics and fine root hairs. No odors or staining.
				5	CL	
					ML	
	0	11/14/21	18/18		OL/ OH	Drive 5.5 - 7.0 ft. Core is frozen below 6.3 feet. Upper 0.4 ft is TUNDRA MAT (OL/OH), reddish black (2.5YR 2.5/1), 100% organics, no sediment. Below 6.0 ft is gravely SILT (ML), mottled olive gray (5Y 3.5/1.5) with brown, tan, and reddish streaks along bedding planes, friable with abundant very find sand size particles that reflect light (mica). Gravel poorly graded, size to 1-1/4 inches diameter, rounded. Some streaky mottling looks like iron staining. No odors or staining..
AOC4-SB7-6.3 (TPH)				6	ML	
				7		TOTAL DEPTH OF BORING: 7.0 ft. below ground surface
				8		
				9		
				10		
				11		

SHEET 1 OF 1 FINISH DATE: 26 July 1994 HOUR: 1145

TETRA TECH

GEOLOGIC LOG OF SOIL BORING
SS12-SB27

PROJECT: Kotzebue LRRS Remedial Investigation
CLIENT/OWNER: AFCEE/USAF
TETRA TECH PROJECT NUMBER: 9676-13
EXPLORATION NUMBER: SS12-SB27
START DATE: 13 July 1994 HOUR: 1715
GROUND SURFACE CONDITIONS: Gravel Fill
CORRESPONDING WELL DESIGNATION: NA

CONTRACTOR REPRESENTATIVE: Rick Osgood PG / Kurt Schmierer PG
EXPLORATION CONTRACTOR: Ambler Exploration
OPERATOR: Steve Moore
DRILL TYPE/METHOD: Track-Mounted Hollow Stem Auger
HAMMER WEIGHT & STROKE: 140 lbs. / 30 inches
AUGER SIZE: 2.25" I.D., 5.0" O.D., 5.0" O.D. Bit

WATER LEVEL INFORMATION
DATE: 13 July 1994 TIME: 1800
DEPTH OF WATER: 7.2 feet below ground surface
(first encountered)

Sample Number/ Analysis/Depth	PID Response Over Background	Blow Count per 6-in Interval __/__/__	Recovery (inches)	Depth (feet)	Lithology	Description/Comments
				0		
				1		
				2		
				3		
				4		
				5		
				6		
					GW	
SS12-SB27-7.5 (VOC) SS12-SB27-7.8 (SVOCS + TPH)	288	4/15/20	18/18	7	OL/OH	Drive 7.0 - 8.5 ft. Top 1-1/2 inch of core is sandy GRAVEL fill (GW), grayish brown (10YR 4.5/2), ~10% sand and fines, gravel is coarse grained to 1-1/4 inch diameter, rounded, dense, wet. Visibly contaminated transition zone near top of sample. Next 2 inches of core is woody PEAT (OL/OH), very dusky red (2.5YR 2.5/2.5) and black (N2.5), obvious petroleum staining, wet, tundra mat. The remainder of the core is a Sandy, clayey SILT (ML), grades downward from black (N2.5) to dark olive gray (2.5Y 4/1), massive, wet, not plastic. Black color is staining from petroleum contamination. Bottom few inches appears uncontaminated. Sampler cold, so near frozen ground.
				8	ML	
				9		
				10		
				11		

TOTAL DEPTH OF BORING: 8.5 ft. below ground surface

SHEET 1 OF 1 FINISH DATE: 13 July 1994 HOUR: 1812

Groundwater Level During Drilling

APPENDIX B – WELL COMPLETION DIAGRAMS

GROUNDWATER MONITORING WELL SS02-MW1

DRILLING COMPANY: Ambler exploration
DRILLERS: Steve Moore/Rob Helton
TYPE OF RIG: Portable track mount rig
DRILL TYPE: Hollow stem auger
NOMINAL HOLE DIAMETER: 8 inches

FIELD GEOLOGIST: David Hose
WELL NUMBERS: SS02-MW1
CORRESPONDING BOREHOLE: SS02-SB1

GROUND SURFACE ELEVATION: 8.59 ft (relative)
START OF DRILLING 30 June 1994 @ 8:30
FINISH OF WELL DEVELOPMENT: 6 July 1994

CASING TYPE: Schedule 40 PVC
CASING SIZE (ID): 2.0 inches
SCREEN TYPE: Sawn slot
SLOT SIZE: 0.020 inch
WELL DEV. METHOD: surge & bail

GROUNDWATER MEASUREMENT

DATE/TIME: 24 July 1994/09:43
WATER DEPTH(TOC): 6.63 ft
WATER ELEVATION: 1.44 ft (relative)
TOC ELEVATION: 8.07 ft (relative)
DATUM: COE; "BAT"

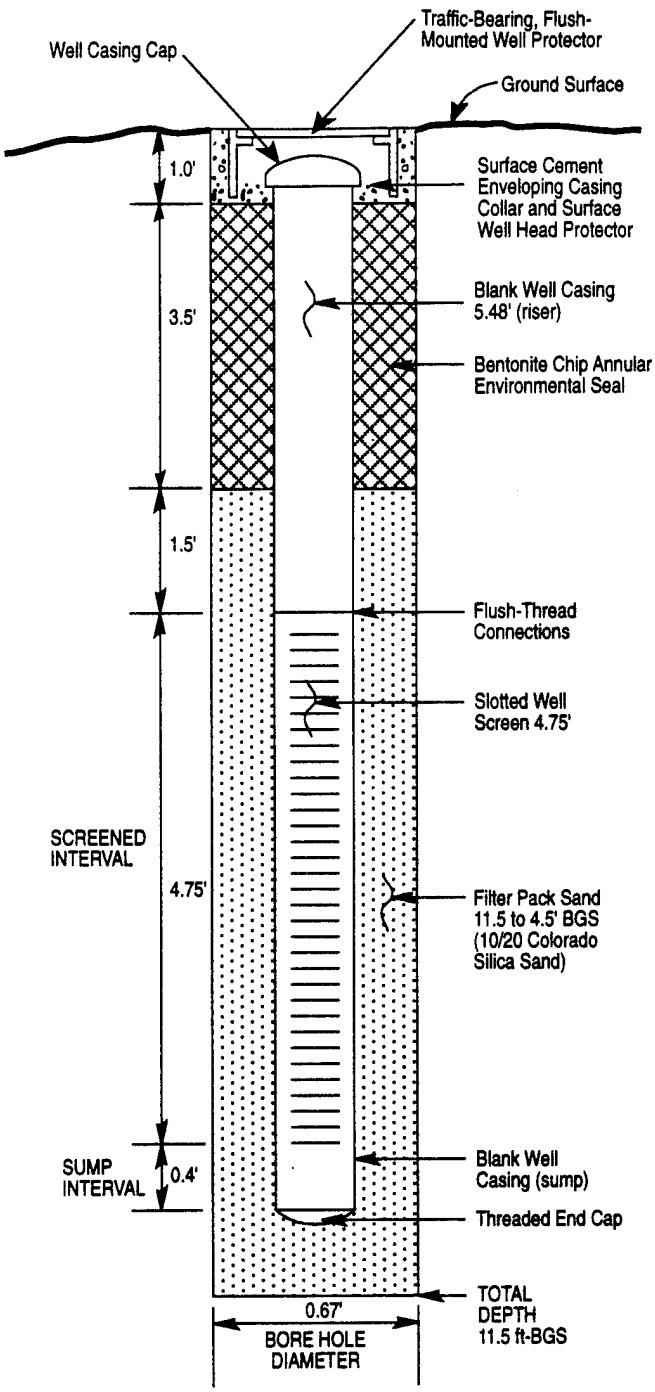

Well Construction Diagram Monitoring Well SS02-MW1.

GROUNDWATER MONITORING WELL SS02-MW2

DRILLING COMPANY: Ambler exploration
DRILLERS: Steve Moore/Rob Helton
TYPE OF RIG: Portable track mount rig
DRILL TYPE: Hollow stem auger
NOMINAL HOLE DIAMETER: 8 inches

FIELD GEOLOGIST: Rick Osgood RG, Kurt Schmierer PG
WELL NUMBERS: SS02-MW2
CORRESPONDING BOREHOLE: SS02-SB2

GROUND SURFACE ELEVATION: 5.59 ft (relative)
START OF DRILLING 8 July 1994 @ 11:39
FINISH OF WELL DEVELOPMENT: 14 July 1994

CASING TYPE: Schedule 40 PVC
CASING SIZE (ID): 2.0 inches
SCREEN TYPE: Sawn slot
SLOT SIZE: 0.010 inch
WELL DEV. METHOD: surge & bail

GROUNDWATER MEASUREMENT

DATE/TIME: 24 July 1994/09:41
WATER DEPTH(TOC): 3.67 ft
WATER ELEVATION: 1.46 ft (relative)
TOC ELEVATION: 5.13 ft (relative)
DATUM: COE; "BAT"

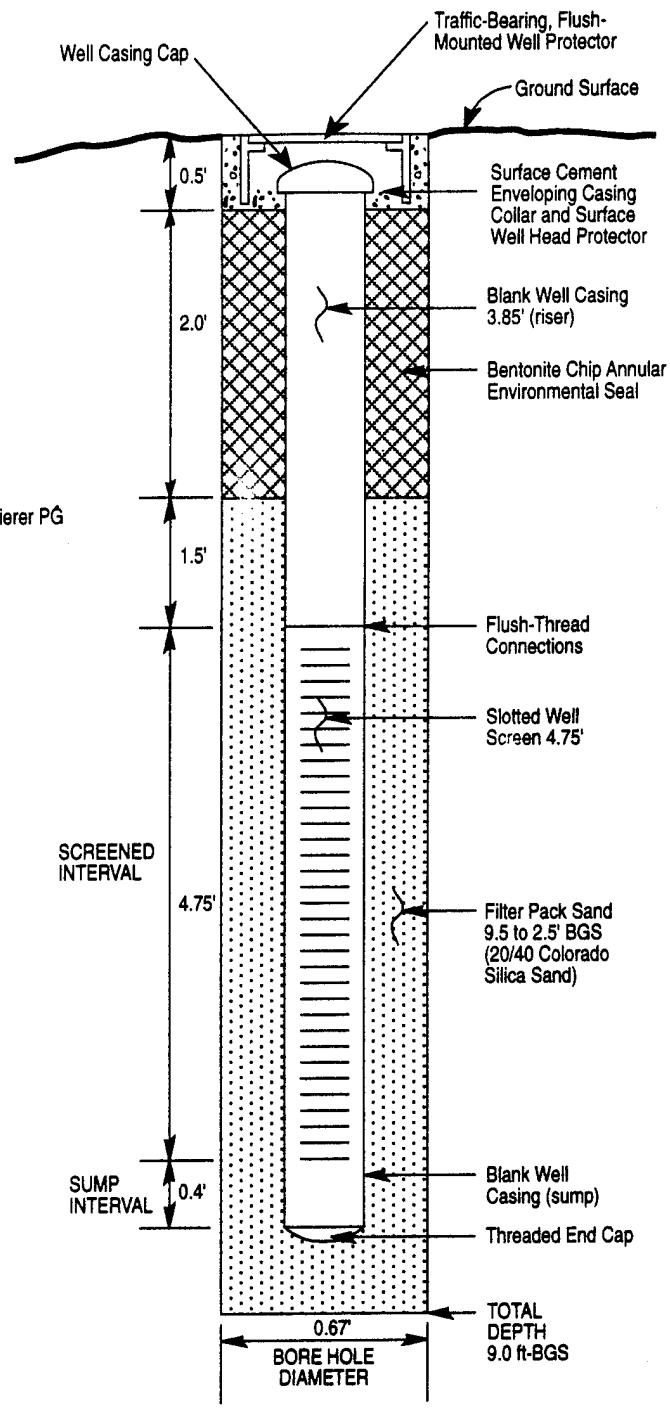

Well Construction Diagram Monitoring Well SS02-MW2.

GROUNDWATER MONITORING WELL SS02-MW3

DRILLING COMPANY: Ambler exploration
DRILLERS: Steve Moore/Rob Helton
TYPE OF RIG: Portable track mount rig
DRILL TYPE: Hollow stem auger
NOMINAL HOLE DIAMETER: 8 inches

FIELD GEOLOGIST: David Hose
WELL NUMBERS: SS02-MW3
CORRESPONDING BOREHOLE: SS02-SB3

GROUND SURFACE ELEVATION: 4.81 ft (relative)
START OF DRILLING 30 June 1994 @ 13:20
FINISH OF WELL DEVELOPMENT: 6 July 1994

CASING TYPE: Schedule 40 PVC
CASING SIZE (ID): 2.0 inches
SCREEN TYPE: Sawn slot
SLOT SIZE: 0.020 inch
WELL DEV. METHOD: surge & bail

GROUNDWATER MEASUREMENT

DATE/TIME: 24 July 1994/09:40
WATER DEPTH(TOC): 2.89 ft
WATER ELEVATION: 1.50 ft (relative)
TOC ELEVATION: 4.39 ft (relative)
DATUM: COE; "BAT"

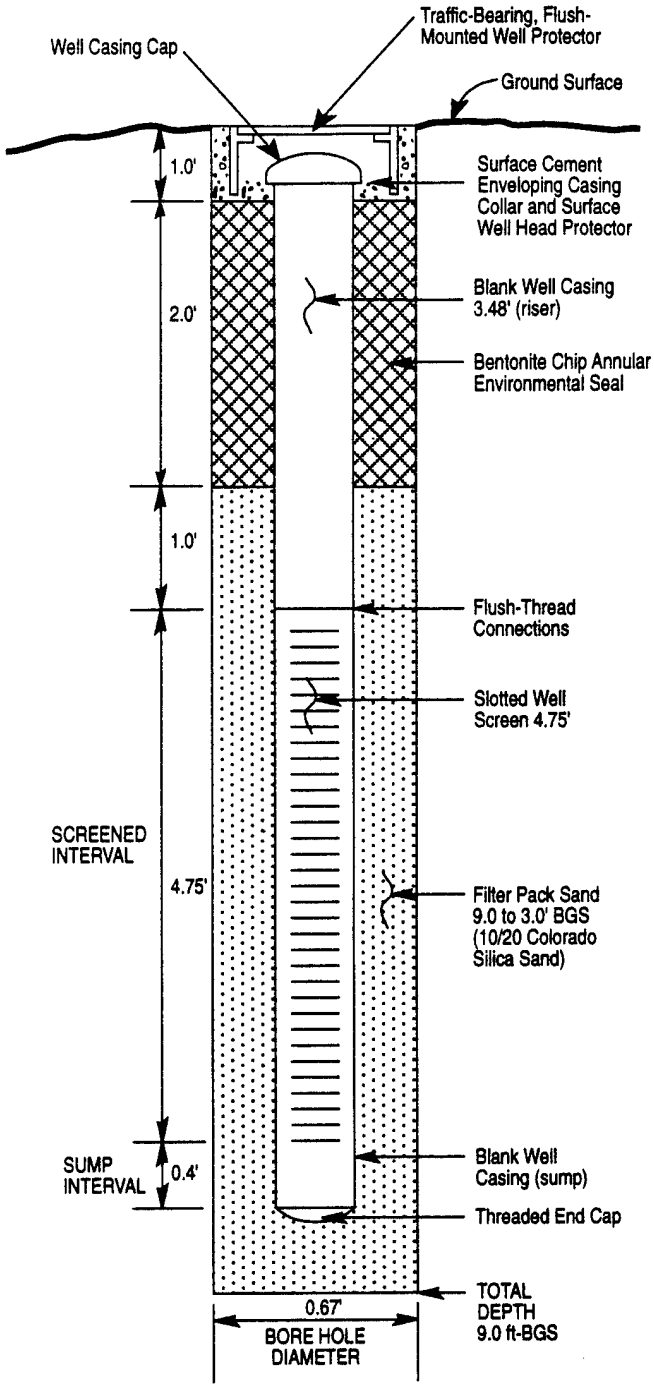

Well Construction Diagram Monitoring Well SS02-MW3.

GROUNDWATER MONITORING WELL BACKGROUND-MW1

DRILLING COMPANY:	Ambler exploration
DRILLERS:	Steve Moore/Rob Helton
TYPE OF RIG:	Portable track mount rig
DRILL TYPE:	Hollow stem auger
NOMINAL HOLE DIAMETER:	8 inches
FIELD GEOLOGIST:	David Hose
WELL NUMBERS:	Background-MW1
CORRESPONDING BOREHOLE:	Background-SB1
GROUND SURFACE ELEVATION:	8.79 ft (relative)
START OF DRILLING	27 June 1994 @ 12:00
FINISH OF WELL DEVELOPMENT:	6 July 1994
CASING TYPE:	Schedule 40 PVC
CASING SIZE (ID):	2.0 inches
SCREEN TYPE:	Sawn slot
SLOT SIZE:	0.020 inch
WELL DEV. METHOD:	surge & bail

GROUNDWATER MEASUREMENT

DATE/TIME:	24 July 1994/09:44
WATER DEPTH(TOC):	6.96 ft
WATER ELEVATION:	1.17 ft (relative)
TOC ELEVATION:	8.13 ft (relative)
DATUM:	COE; "BAT"

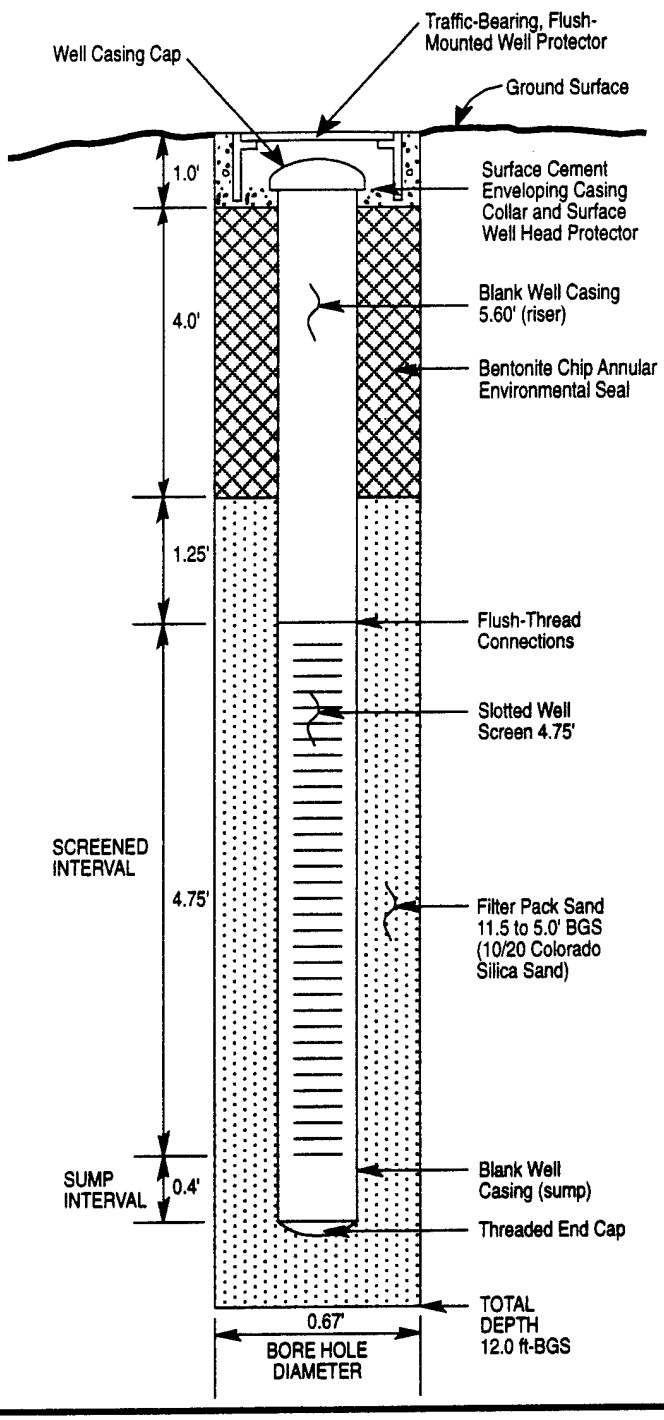

Well Construction Diagram Monitoring Well Background-MW1.

GROUNDWATER MONITORING WELL ST05-MW1

DRILLING COMPANY: Ambler exploration
DRILLERS: Steve Moore/Rob Helton
TYPE OF RIG: Portable track mount rig
DRILL TYPE: Hollow stem auger
NOMINAL HOLE DIAMETER: 8 inches

FIELD GEOLOGIST: David Hose
WELL NUMBERS: ST05-MW1
CORRESPONDING BOREHOLE: ST05-SB1

GROUND SURFACE ELEVATION: 9.75 ft (relative)
START OF DRILLING 28 June 1994 @ 9:00
FINISH OF WELL DEVELOPMENT: 8 July 1994

CASING TYPE: Schedule 40 PVC
CASING SIZE (ID): 2.0 inches
SCREEN TYPE: Sawn slot
SLOT SIZE: 0.020 inch
WELL DEV. METHOD: surge & bail

GROUNDWATER MEASUREMENT

DATE/TIME: 24 July 1994/09:29
WATER DEPTH(TOC): 6.33 ft
WATER ELEVATION: 2.88 ft (relative)
TOC ELEVATION: 9.21 ft (relative)
DATUM: COE; "BAT"

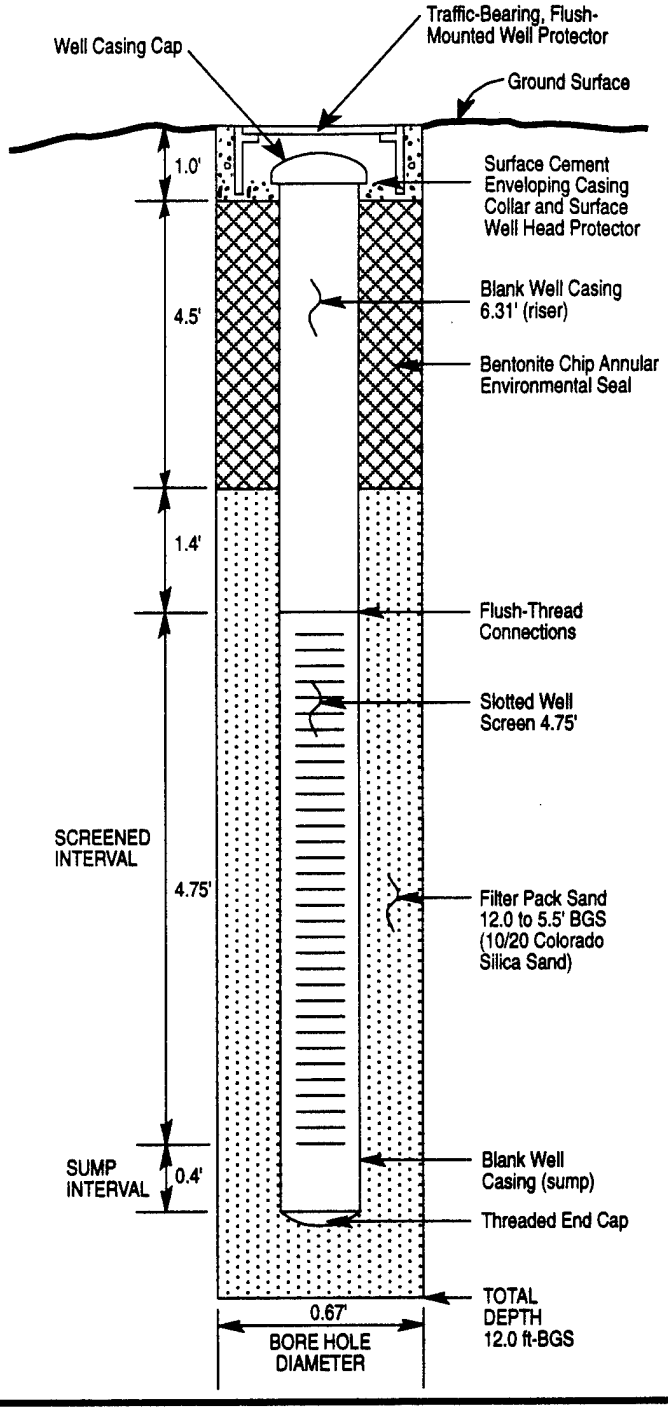

Well Construction Diagram Monitoring Well ST05-MW1.

GROUNDWATER MONITORING WELL ST05-MW2

DRILLING COMPANY: Ambler exploration
DRILLERS: Steve Moore/Rob Helton
TYPE OF RIG: Portable track mount rig
DRILL TYPE: Hollow stem auger
NOMINAL HOLE DIAMETER: 8 inches

FIELD GEOLOGIST: David Hose
WELL NUMBERS: ST05-MW2
CORRESPONDING BOREHOLE: ST05-SB2

GROUND SURFACE ELEVATION: 9.78 ft (relative)
START OF DRILLING 28 June 1994 @ 12:00
FINISH OF WELL DEVELOPMENT: 8 July 1994

CASING TYPE: Schedule 40 PVC
CASING SIZE (ID): 2.0 inches
SCREEN TYPE: Sawn slot
SLOT SIZE: 0.020 inch
WELL DEV. METHOD: surge & bail

GROUNDWATER MEASUREMENT

DATE/TIME: 24 July 1994/09:34
WATER DEPTH(TOC): 7.03 ft
WATER ELEVATION: 2.10 ft (relative)
TOC ELEVATION: 9.13 ft (relative)
DATUM: COE; "BAT"

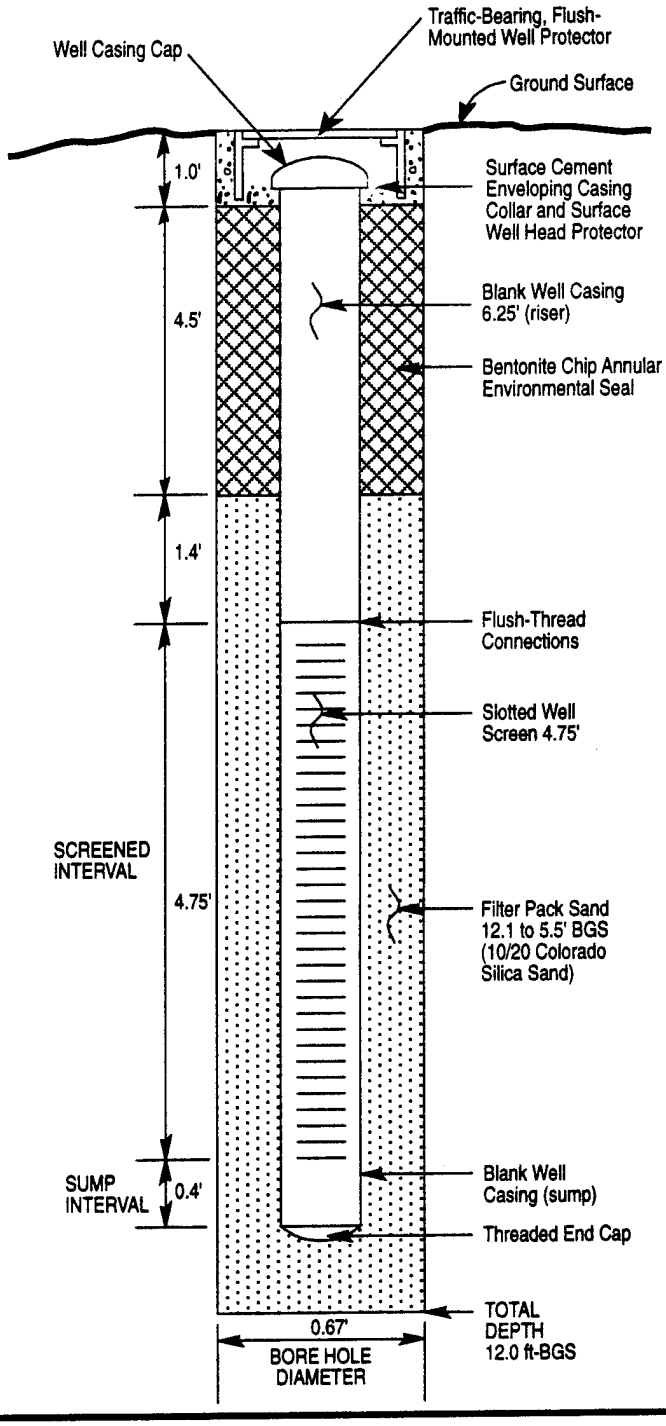

Well Construction Diagram Monitoring Well ST05-MW2.

GROUNDWATER MONITORING WELL ST05-MW3

DRILLING COMPANY: Ambler exploration

DRILLERS: Steve Moore/Rob Helton

TYPE OF RIG: Portable track mount rig

DRILL TYPE: Hollow stem auger

NOMINAL HOLE DIAMETER: 8 inches

FIELD GEOLOGIST: David Hose

WELL NUMBERS: ST05-MW3

CORRESPONDING BOREHOLE: ST05-SB5

GROUND SURFACE ELEVATION: 5.59 ft (relative)

START OF DRILLING 29 June 1994 @ 11:15

FINISH OF WELL DEVELOPMENT: 8 July 1994

CASING TYPE: Schedule 40 PVC

CASING SIZE (ID): 2.0 inches

SCREEN TYPE: Sawn slot

SLOT SIZE: 0.020 inch

WELL DEV. METHOD: surge & bail

GROUNDWATER MEASUREMENT

DATE/TIME: 24 July 1994/09:39

WATER DEPTH(TOC): 6.80 ft

WATER ELEVATION: 1.88 ft (relative)

TOC ELEVATION: 8.68 ft (relative)

DATUM: COE; "BAT"

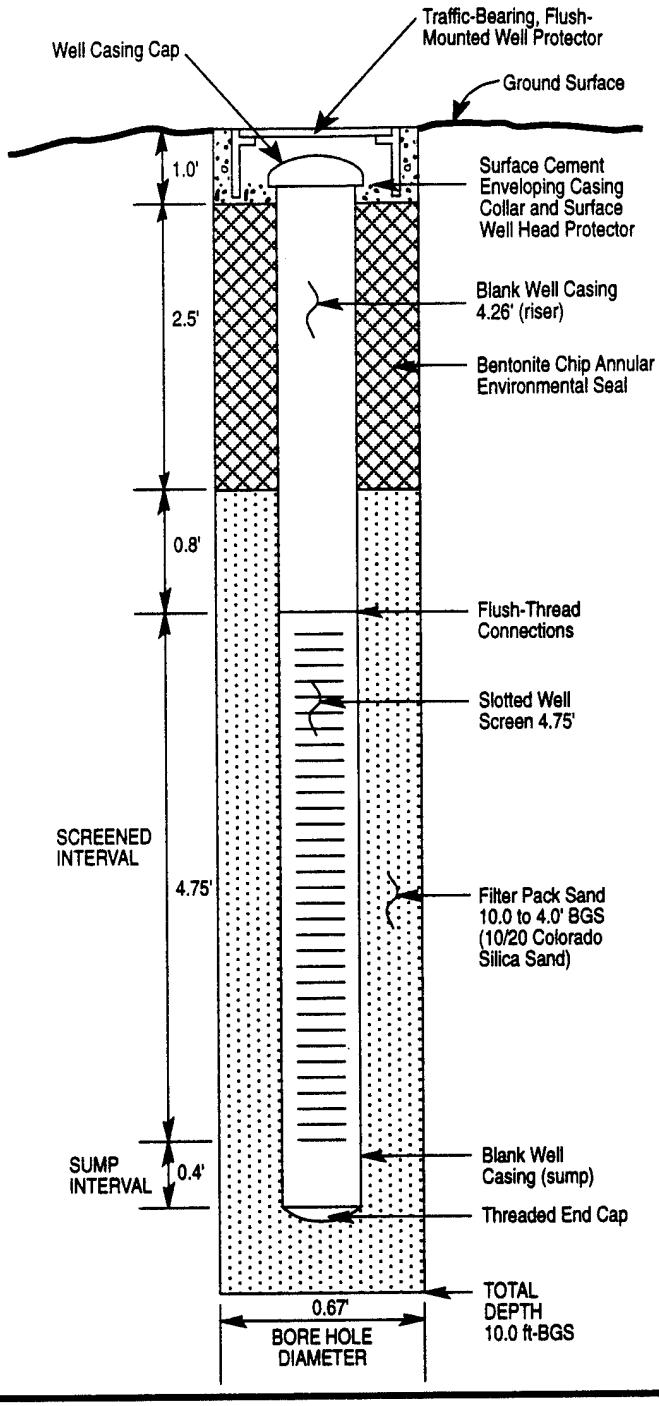

Well Construction Diagram Monitoring Well ST05-MW3.

GROUNDWATER MONITORING WELL ST05-MW4

DRILLING COMPANY: Ambler exploration

DRILLERS: Steve Moore/Rob Helton

TYPE OF RIG: Portable track mount rig

DRILL TYPE: Hollow stem auger

NOMINAL HOLE DIAMETER: 8 inches

FIELD GEOLOGIST: Rick Osgood RG, Kurt Schmierer PG

WELL NUMBERS: ST05-MW4

CORRESPONDING BOREHOLE: ST05-SB12

GROUND SURFACE ELEVATION: 8.59 ft (relative)

START OF DRILLING 7 July 1994 @ 14:00

FINISH OF WELL DEVELOPMENT: 8 July 1994

CASING TYPE: Schedule 40 PVC

CASING SIZE (ID): 2.0 inches

SCREEN TYPE: Sawn slot

SLOT SIZE: 0.020 inch

WELL DEV. METHOD: surge & bail

GROUNDWATER MEASUREMENT

DATE/TIME: 24 July 1994/09:33

WATER DEPTH(TOC): 6.02 ft

WATER ELEVATION: 2.24 ft (relative)

TOC ELEVATION: 8.26 ft (relative)

DATUM: COE; "BAT"

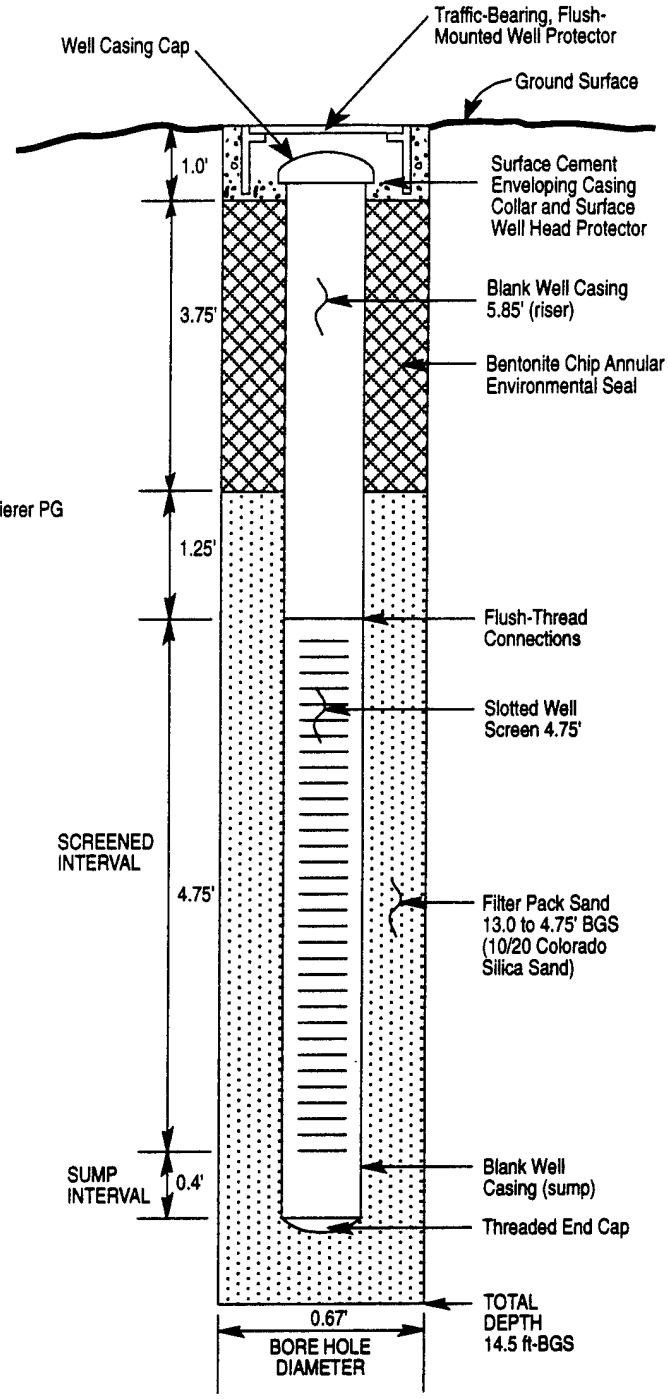

Well Construction Diagram Monitoring Well ST05-MW4.

GROUNDWATER MONITORING WELL ST05-MW5

DRILLING COMPANY: Ambler exploration
DRILLERS: Steve Moore/Rob Helton
TYPE OF RIG: Portable track mount rig
DRILL TYPE: Hollow stem auger
NOMINAL HOLE DIAMETER: 8 inches

FIELD GEOLOGIST: Rick Osgood RG, Kurt Schmierer PG
WELL NUMBERS: ST05-MW5
CORRESPONDING BOREHOLE: ST05-SB13

GROUND SURFACE ELEVATION: 7.21 ft (relative)
START OF DRILLING 9 July 1994 @ 9:37
FINISH OF WELL DEVELOPMENT: 11 July 1994

CASING TYPE: Schedule 40 PVC
CASING SIZE (ID): 2.0 inches
SCREEN TYPE: Sawn slot
SLOT SIZE: 0.020 inch
WELL DEV. METHOD: surge & bail

GROUNDWATER MEASUREMENT

DATE/TIME: 24 July 1994/09:32
WATER DEPTH(TOC): 4.67 ft
WATER ELEVATION: 1.93 ft (relative)
TOC ELEVATION: 6.60 ft (relative)
DATUM: COE; "BAT"

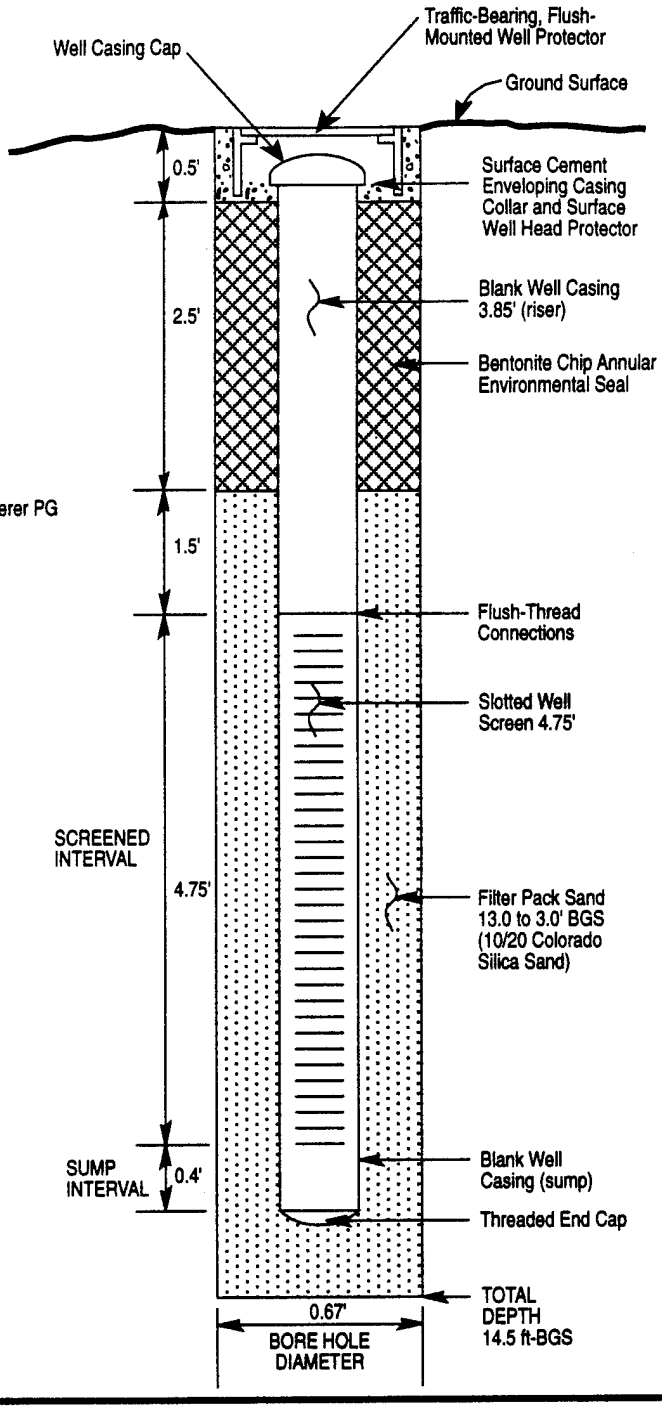

Well Construction Diagram Monitoring Well ST05-MW5.

GROUNDWATER MONITORING WELL ST05-MW6

DRILLING COMPANY: Ambler exploration
DRILLERS: Steve Moore/Rob Helton
TYPE OF RIG: Portable track mount rig
DRILL TYPE: Hollow stem auger
NOMINAL HOLE DIAMETER: 8 inches

FIELD GEOLOGIST: Rick Osgood RG, Kurt Schmierer PG
WELL NUMBERS: ST05-MW6
CORRESPONDING BOREHOLE: ST05-SB14

GROUND SURFACE ELEVATION: 5.66 ft (relative)
START OF DRILLING 9 July 1994 @ 13:49
FINISH OF WELL DEVELOPMENT: 11 July 1994

CASING TYPE: Schedule 40 PVC
CASING SIZE (ID): 2.0 inches
SCREEN TYPE: Sawn slot
SLOT SIZE: 0.010 inch
WELL DEV. METHOD: surge & bail

GROUNDWATER MEASUREMENT

DATE/TIME: 24 July 1994/09:31
WATER DEPTH(TOC): 3.42 ft
WATER ELEVATION: 1.60 ft (relative)
TOC ELEVATION: 5.02 ft (relative)
DATUM: COE; "BAT"

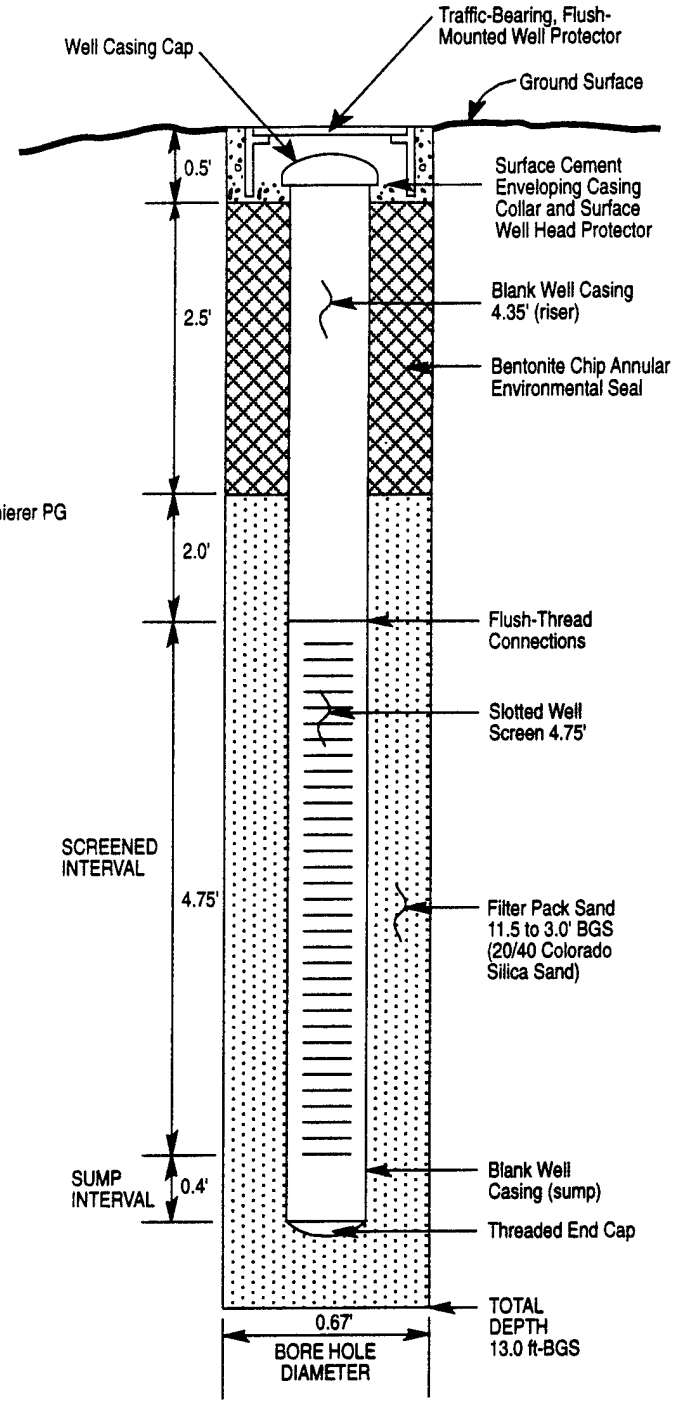

Well Construction Diagram Monitoring Well ST05-MW6.

GROUNDWATER MONITORING WELL ST05-MW7

DRILLING COMPANY: Ambler exploration
DRILLERS: Steve Moore/Rob Helton
TYPE OF RIG: Portable track mount rig
DRILL TYPE: Hollow stem auger
NOMINAL HOLE DIAMETER: 8 inches

FIELD GEOLOGIST: Rick Osgood RG, Kurt Schmierer PG
WELL NUMBERS: ST05-MW7
CORRESPONDING BOREHOLE: ST05-SB15

GROUND SURFACE ELEVATION: 7.01 ft (relative)
START OF DRILLING 10 July 1994 @ 10:17
FINISH OF WELL DEVELOPMENT: 13 July 1994

CASING TYPE: Schedule 40 PVC
CASING SIZE (ID): 2.0 inches
SCREEN TYPE: Sawn slot
SLOT SIZE: 0.020 inch
WELL DEV. METHOD: surge & bail

GROUNDWATER MEASUREMENT

DATE/TIME: 24 July 1994/09:35
WATER DEPTH(TOC): 4.37 ft
WATER ELEVATION: 2.24 ft (relative)
TOC ELEVATION: 6.61 ft (relative)
DATUM: COE; "BAT"

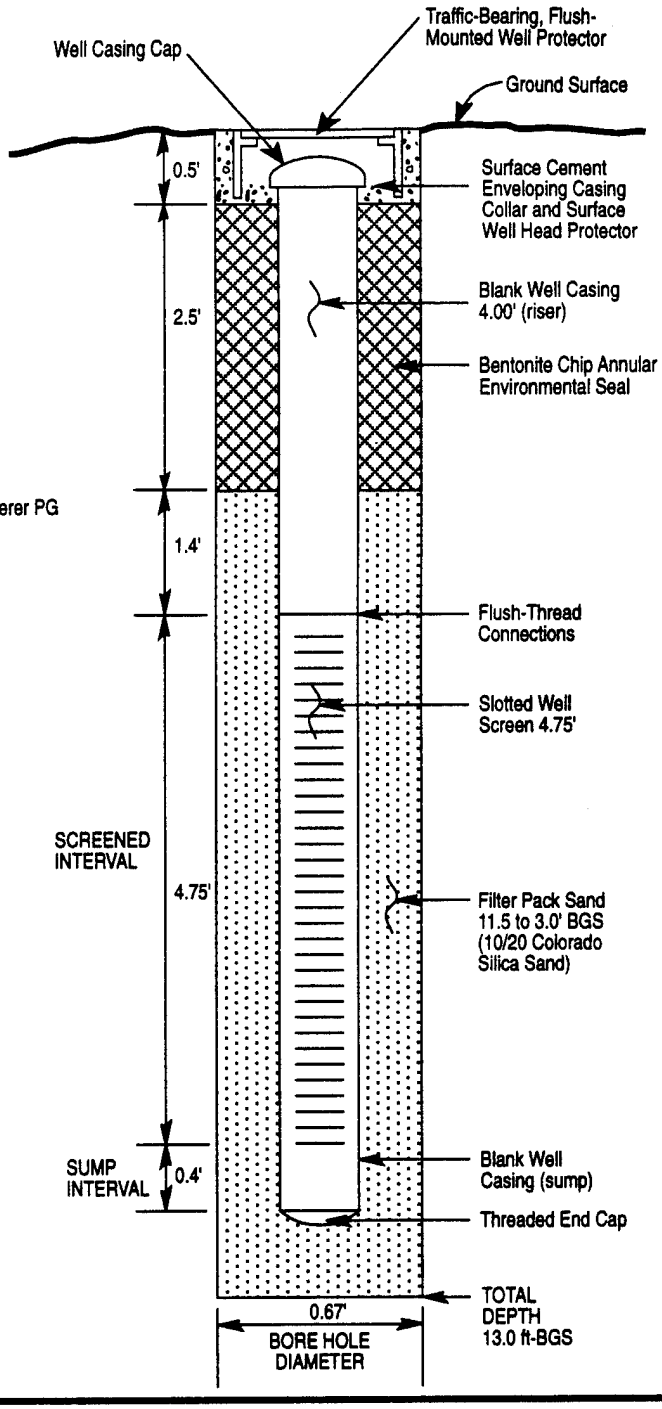

Well Construction Diagram Monitoring Well ST05-MW7.

GROUNDWATER MONITORING WELL ST05-MW8

DRILLING COMPANY: Ambler exploration

DRILLERS: Steve Moore/Rob Helton

TYPE OF RIG: Portable track mount rig

DRILL TYPE: Hollow stem auger

NOMINAL HOLE DIAMETER: 8 inches

FIELD GEOLOGIST: Rick Osgood RG, Kurt Schmierer PG

WELL NUMBERS: ST05-MW8

CORRESPONDING BOREHOLE: ST05-SB16

GROUND SURFACE ELEVATION: 5.61 ft (relative)

START OF DRILLING 10 July 1994 @ 14:10

FINISH OF WELL DEVELOPMENT: 13 July 1994

CASING TYPE: Schedule 40 PVC

CASING SIZE (ID): 2.0 inches

SCREEN TYPE: Sawn slot

SLOT SIZE: 0.010 inch

WELL DEV. METHOD: surge & bail

GROUNDWATER MEASUREMENT

DATE/TIME: 24 July 1994/09:36

WATER DEPTH(TOC): 3.49 ft

WATER ELEVATION: 1.54 ft (relative)

TOC ELEVATION: 5.03 ft (relative)

DATUM: COE; "BAT"

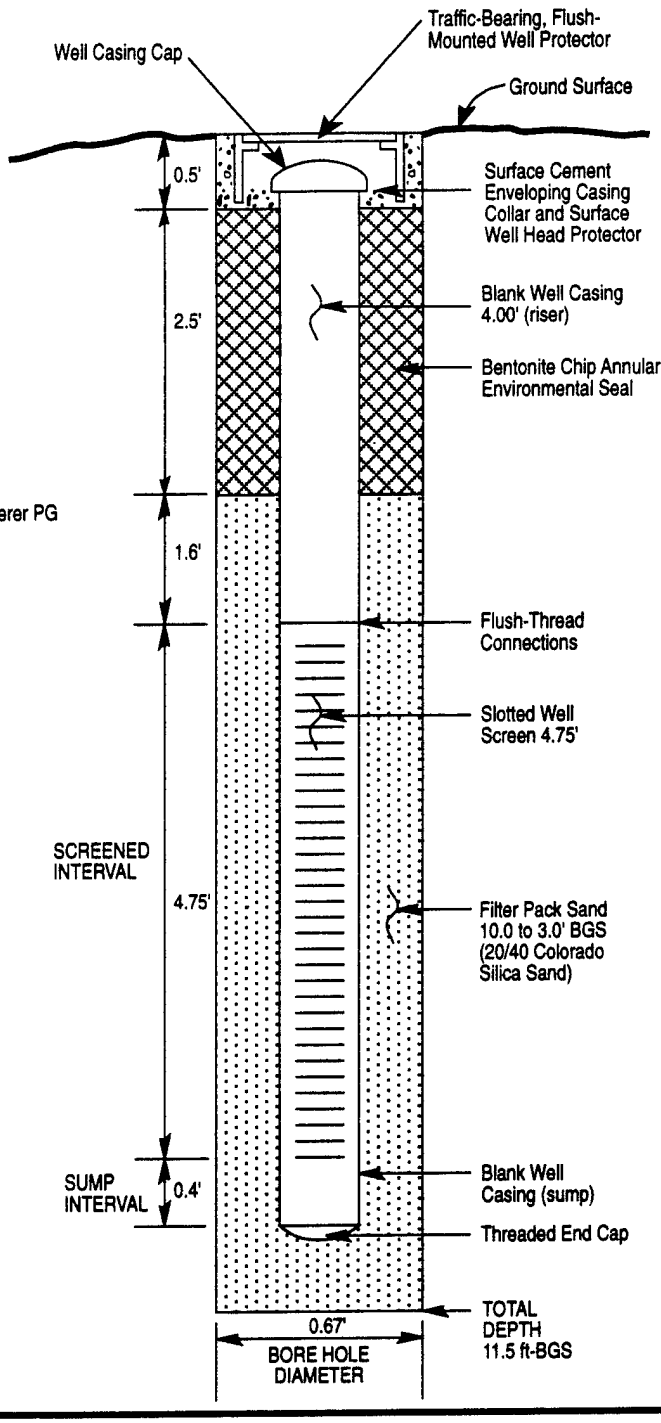

Well Construction Diagram Monitoring Well ST05-MW8.

GROUNDWATER MONITORING WELL ST05-MW9

DRILLING COMPANY: Ambler exploration

DRILLERS: Steve Moore/Rob Helton

TYPE OF RIG: Portable track mount rig

DRILL TYPE: Hollow stem auger

NOMINAL HOLE DIAMETER: 8 inches

FIELD GEOLOGIST: Rick Osgood RG, Kurt Schmierer PG

WELL NUMBERS: ST05-MW9

CORRESPONDING BOREHOLE: ST05-SB17

GROUND SURFACE ELEVATION: 6.20 ft (relative)

START OF DRILLING 11 July 1994 @ 10:22

FINISH OF WELL DEVELOPMENT: 12 July 1994

CASING TYPE: Schedule 40 PVC

CASING SIZE (ID): 2.0 inches

SCREEN TYPE: Sawn slot

SLOT SIZE: 0.020 inch

WELL DEV. METHOD: surge & bail

GROUNDWATER MEASUREMENT

DATE/TIME: 24 July 1994/09:38

WATER DEPTH(TOC): 4.18 ft

WATER ELEVATION: 1.52 ft (relative)

TOC ELEVATION: 5.70 ft (relative)

DATUM: COE; "BAT"

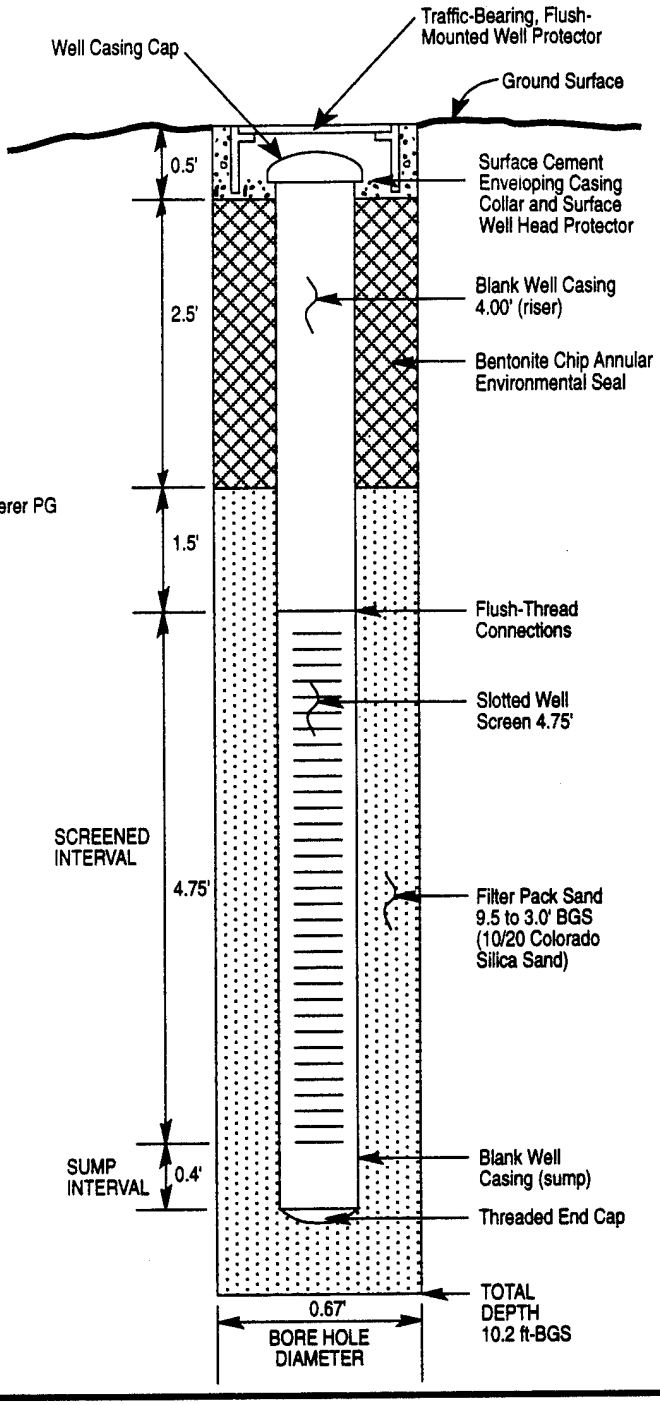

Well Construction Diagram Monitoring Well ST05-MW9.

APPENDIX C – WELL AND SAMPLE LOCATION SURVEY DATA

Monitoring Well Elevations at Kotzebue, July 26, 1994

ST05 MW1	9.21	NOTCH	OF	PVC
ST05 MW6	5.02	"	"	"
ST05 MW5	6.60	"	"	"
ST05 MW4	8.26	"	"	"
ST05 MW8	5.03	"	"	"
ST05 MW2	9.13	"	"	"
ST05 MW7	6.61	"	"	"
ST05 MW3	8.68	"	"	"
ST05 MW9	5.70	"	"	"
SS02 MW3	4.39	"	"	"
SS02 MW2	5.13	"	"	"
SS02 MW1	8.07	"	"	"
SS02 MW Background	8.13	"	"	"

Reg. to: 11 CEOS/CECC USAF
File Name: D:\SIMPLCTY\SURVEYS\KOTZ.DAT

Job: Landfill survey at Kotzebue site
July 25-27, 1994

By: JCB/ROL

Point	Direction	Distance	Northing	Easting	Elevation
List					
1	TEMP PT #1, SET PK NAIL		4695525.756	1552951.520	118.47
2	BLM MON.SEC COR 21,22,28,27		4697724.850	1552966.874	0.00
3	TEMP PT #2, SET 12" SPIKE		4693762.472	1553659.527	14.97
4	TEMP PT #3, SET 12" SPIKE		4695451.197	1552485.529	8.99
5	TEMP PT #7, SET PK NAIL		4695349.721	1553451.254	139.56
6	TEMP PT #8, SET PK NAIL		4696180.764	1552589.618	122.66
7	TEMP PT #9, SET PK NAIL		4696327.124	1552782.431	122.70
8	TEMP PT #6, SET PK NAIL		4694721.944	1554537.481	145.44
9	CoE B.C. MON "BAT"		4694726.638	1554676.294	154.89
10	CoE "BAG",1.5"IP W/PLUG&TACK		4695457.879	1555017.747	119.89
11	TEMP PT #5, SET PK NAIL		4694848.483	1555036.262	145.55
12	TEMP PT #4, SET PK NAIL		4694148.162	1554838.070	129.94
13	TEMP PT #10, SET 12" SPIKE		4693504.568	1553682.510	7.96
14	ST05 SB10		4693675.101	1553690.252	8.70
15	ST05 SB19		4693733.820	1553709.846	9.19
16	ST05 SB21		4693784.020	1553628.533	8.88
17	ST05 SS3		4693849.957	1553561.443	7.78
18	ST05 MW5/SB13 (GND)		4693867.191	1553544.810	7.21
19	ST05 MW4/SB12 (GND)		4693921.745	1553614.676	8.59
20	ST05 SB23		4693999.525	1553479.238	9.31
21	ST05 SB22		4694088.736	1553464.084	9.65
22	ST05 SB24		4694037.808	1553392.043	9.30
23	ST05 MW8/SB16 (GND)		4694063.073	1553275.224	5.61
24	ST05 SB8		4693935.414	1553346.776	4.96
25	ST05 MW6/SB14 (GND)		4693796.036	1553449.952	5.66
26	ST05 SB9		4693677.989	1553528.195	5.28
27	ST05 SB11		4693565.800	1553629.258	6.72
28	ST05 SB6		4694282.113	1553119.968	5.43
29	ST05 MW9/SB17 (GND)		4694199.692	1553183.028	6.20
30	ST05 SB7		4694110.930	1553228.949	5.09
31	ST05 SB3		4694168.760	1553302.519	9.33
32	ST05 MW2/SB2 (GND)		4694117.471	1553343.308	9.78
33	ST05 SS2		4694113.110	1553364.949	9.82
34	ST05 MW7/SB15 (GND)		4694278.402	1553342.670	7.01

Reg. to: 11 CEOS/CECC USAF
File Name: D:\SIMPLCTY\SURVEYS\KOTZ.DAT

Job: Landfill survey at Kotzebue site
July 25-27, 1994

By: JCB/ROL

Point	Direction	Distance	Northing	Easting	Elevation
35	ST05 SB4		4694253.936	1553267.121	9.81
36	ST05 MW3/SB05 (GND)		4694370.688	1553198.730	9.22
37	ST05 SS1		4694361.108	1553308.033	9.53
38	SS02 SS3		4694389.918	1553250.467	8.29
39	SS02 SS1		4694469.948	1553087.516	8.63
40	ST05 SB20		4694437.744	1553000.076	4.91
41	SS02 MW3		4694402.365	1553025.753	4.81
42	SS02 GT10-B		4694647.220	1552980.349	9.25
43	SS02 MW2 (GND)		4694649.167	1552861.320	5.59
44	SS02 G8-B		4694727.497	1552810.770	4.94
45	SS02 MW1 (GND)		4695341.157	1552522.226	8.59
46	SS02 MW BACKGROUND		4695994.021	1552126.974	8.79
47	ST05 SB18		4693570.383	1553749.974	8.84
48	ST05 MW1/SB01		4693466.319	1553804.639	9.1
49	TEMP PT #14, SET 12" SPIKE		4694738.695	1554698.981	147.46
50	TEMP PT #11, SET 12" SPIKE		4694331.456	1554759.423	142.24
51	TEMP PT #12, SET 12" SPIKE		4694656.613	1555037.333	145.40
52	TEMP PT #13, SET 12" SPIKE		4694517.067	1555054.238	147.36
53	TEMP PT #8		4696180.763	1552589.585	123.08
54	AOC8-GT1-T		4695980.292	1552674.077	121.04
55	AOC8-GT2-F		4696041.400	1552623.378	125.24
56	AOC8 SB3-3.5		4696070.628	1552562.209	120.62
57	AOC8 SB1-1.5		4696083.993	1552603.414	123.28
58	AOC8 SB2-1.5		4696123.494	1552588.336	117.92
59	AOC8 SB4-1.5		4696160.046	1552554.509	107.91
60	SS11 SB3		4696146.359	1552626.732	120.74
61	SS11 SB4		4696177.151	1552671.764	118.71
62	SS11 SB2		4696149.621	1552688.923	119.60
63	SS11 SB1		4696100.370	1552655.159	121.99
64	SS11 SW1,SW1-MS&MSD,SD1(SB5?		4696163.533	1552657.201	118.57
65	AOC9 SB3		4696215.373	1552797.078	116.75
66	AOC9 SB1		4696264.353	1552797.627	117.98
67	AOC9 SB2		4696304.961	1552795.392	117.9
68	AOC9 SB4		4696347.931	1552863.978	109.87
69	AOC6 SB2		4695319.952	1553327.238	139.42

Reg. to: 11 CEOS/CECC USAF
File Name: D:\SIMPLCTY\SURVEYS\KOTZ.DAT

Re: Landfill survey at Kotzebue site
July 25-27, 1994

By: JCB/ROL

Point	Direction	Distance	Northing	Easting	Elevation
70	AOC6 SB1		4695281.017	1553343.802	136.39
71	AOC6 GT3-T		4695308.420	1553403.680	139.04
72	AOC6 SB7		4695335.979	1553383.201	138.40
73	AOC6 SB3		4695191.772	1553569.378	139.41
74	AOC6 SB5		4695147.071	1553541.087	139.46
75	AOC6 SD1/SW1		4695155.260	1553532.226	135.79
76	AOC6 SB6		4695129.183	1553575.622	137.84
77	AOC5 SB9		4694875.527	1554948.368	145.89
78	AOC5 SB17		4694895.789	1554949.050	138.79
79	AOC11 SB6		4694774.167	1554516.277	143.57
80	AOC11 SB1/SB2		4694732.954	1554497.911	145.06
81	AOC11 SB3		4694710.754	1554514.430	141.25
82	AOC11 SB5		4694691.117	1554459.722	140.66
83	AOC11 SB4		4694672.582	1554512.387	141.40
84	AOC11 SS1		4694652.741	1554476.812	138.01
85	AOC11 SS2		4694582.292	1554506.402	134.14
86	AOC12 SS1		4694608.288	1554614.551	140.71
87	SS12 SB12		4694571.486	1554632.643	137.86
88	SS12 SB39/SB40		4694540.420	1554550.686	134.66
89	AOC2 SB1		4694499.204	1554654.633	136.38
90	SS12 SB1		4694448.426	1554625.681	134.09
91	SS12 SB13		4694455.931	1554571.736	131.32
92	AOC2 SB2		4694464.630	1554529.242	128.98
93	AOC10 SEPTIC TANK (TOP ROOF)		4694435.735	1554485.147	151.39
94	AOC5 SB20		4694804.032	1554728.301	143.88
95	AOC5 SB18/SB19		4694816.030	1554752.607	143.82
96	AOC5 SB10		4694802.693	1554757.832	143.84
97	AOC5 SB25		4694701.838	1554638.491	145.25
98	AOC5 SB7		4694673.129	1554683.953	145.26
99	AOC5 SB23/SB24		4694725.576	1554718.856	146.27
100	AOC5 SB22		4694659.584	1554730.274	144.36
101	AOC5 SB6		4694626.544	1554739.757	143.47
102	SS12 SB9		4694535.822	1554751.122	142.61
103	SS12 SB7		4694485.815	1554764.393	142.12

Reg. to: 11 CEOS/CECC USAF
File Name: D:\SIMPLCTY\SURVEYS\KOTZ.DAT

Job: Landfill survey at Kotzebue site
July 25-27, 1994

By: JCB/ROL

Point	Direction	Distance	Northing	Easting	Elevation
104	SS12 SB5		4694461.191	1554777.197	143.08
105	NW COR COMPOSITE BLDG (END)		4694727.229	1554722.687	146.64
106	SS12 SB11		4694583.686	1554732.168	144.31
107	SS12 SB8		4694471.749	1554718.366	139.85
108	SW COR COMPOSITE BLDG (GND)		4694467.128	1554799.119	145.75
109	SS12 SB6		4694440.567	1554721.552	142.00
110	SS12 SB25		4694395.308	1554723.358	141.44
111	SS12 SB26		4694387.497	1554787.965	145.96
112	AOC4 SB1		4694453.161	1554827.970	151.48
113	SS12 SB27		4694303.497	1554825.213	143.70
114	SS12 SB4		4694285.752	1554819.596	137.71
115	SS12 SB28		4694302.147	1554870.664	139.96
116	SS12 SB29		4694242.339	1554855.011	135.42
117	SS12 SB18		4694221.100	1554795.605	129.8
118	SS12 SB3		4694309.806	1554755.958	135.81
119	SS12 SB17		4694320.170	1554693.647	133.58
120	SS12 SB2		4694378.497	1554650.743	133.07
121	SS12 SW1		4694336.437	1554604.352	124.27
122	SS12 SB16		4694270.861	1554651.294	127.73
123	SS12 SB30		4694194.325	1554660.323	124.88
124	SS12 SB15		4694315.177	1554546.822	121.20
125	SS12 SB14		4694376.936	1554496.204	119.94
126	AOC5 SB11		4694425.714	1554522.368	125.44
127	SS12 SB38		4694443.188	1554426.296	124.28
128	SS12 SB37		4694201.007	1554250.243	94.06
129	SS12 SB32		4694170.423	1554342.207	95.70
130	SS12 SB31		4694063.048	1554429.959	95.02
131	SS12 SB22		4693848.380	1554443.221	84.06
132	SS12 SB21		4693982.876	1554361.895	87.19
133	SS12 SB33		4693924.488	1554308.533	85.71
134	SS12 SB34		4694029.374	1554228.415	87.83
135	SS12 SB20		4694065.944	1554272.093	87.82
136	SS12 SW3		4694062.119	1554266.211	87.
137	SS12 SB19		4694134.184	1554172.652	90.15
138	SS12 SB36		4694139.070	1554143.492	90.73

Reg. to: 11 CEOS/CECC USAF
File Name: D:\SIMPLCTY\SURVEYS\KOTZ.DAT

Job: Landfill survey at Kotzebue site
July 25-27, 1994

By: JCB/ROL

Point	Direction	Distance	Northing	Easting	Elevation
139	SS12 SB35		4694051.133	1554105.445	86.03
140	SS12 SW5/SD5		4693976.385	1554052.209	79.63
141	SS12 SB23		4693670.311	1554161.599	52.24
142	SS12 SB24		4693469.318	1554126.939	32.42
143	SS12 SW4		4693311.007	1554086.896	12.82
144	AOC2 SB3		4694146.132	1553453.262	10.93
145	SS02 SS2		4694804.760	1552923.266	4.03
146	TEMP PT #11		4694331.491	1554759.408	142.20
147	AOC5 SB13		4694346.841	1554936.171	140.55
148	AOC5 SB2		4694391.041	1554916.431	146.44
149	AOC5 SB12		4694417.051	1554915.845	148.18
150	AOC4 SB6		4694459.311	1554900.638	149.52
151	AOC4 SB7		4694458.069	1554895.202	149.66
152	AOC4 GT5-F2		4694400.415	1555015.708	146.13
153	AOC7 SB2		4694284.020	1555206.723	142.30
154	AOC7 SB3		4694244.599	1555217.517	141.71
155	AOC7 SB1		4694269.310	1555259.763	143.14
156	AOC7 GT7-T		4694350.846	1555336.114	147.38
157	AOC3 SB4/SB8		4694459.276	1555226.933	146.85
158	AOC3 SB5		4694486.444	1555277.877	146.65
159	AOC3 SB2		4694526.330	1555271.391	147.25
160	AOC3 SB1		4694501.871	1555196.204	145.97
161	AOC3 SB7		4694545.224	1555240.205	150.74
162	AOC3 SB6		4694541.398	1555161.999	145.60
163	AOC4 GT5-F1		4694442.977	1554850.371	149.64
164	AOC3 SB3		4694577.446	1555274.703	144.95
165	AOC4 SB9		4694490.683	1554940.707	148.18
166	SS08 SB5		4694629.713	1554929.076	146.38
167	SS08 SB1		4694620.466	1554916.275	145.78
168	SS08 SB4		4694633.433	1554910.181	146.68
169	SS08 SB2		4694614.718	1554894.505	145.95
170	AOC1 SB10		4694609.803	1555207.976	143.62
171	AOC1 SB04		4694636.828	1555186.914	146.70
172	AOC1 SB5		4694667.366	1555180.969	147.50

Reg. to: 11 CEOS/CECC USAF
File Name: D:\SIMPLCTY\SURVEYS\KOTZ.DAT

Job: Landfill survey at Kotzebue site
July 25-27, 1994

By: JCB/ROL

Point	Direction	Distance	Northing	Easting	Elevation
173	AOC1 SB6		4694697.680	1555176.612	149.09
174	AOC1 SB3		4694646.200	1555144.339	148.44
175	AOC1 SB1		4694627.468	1555112.081	148.18
176	AOC1 SB2		4694648.502	1555106.907	147.23
177	AOC1 SB7		4694670.900	1555115.507	144.44
178	AOC5 SB1		4694720.954	1555132.923	144.20
179	AOC5 SS1		4694740.153	1555119.384	141.02
180	AOC5 SB14		4694719.433	1554919.386	144.73
181	AOC5 SB3		4694697.399	1554896.127	146.27
182	AOC5 SB4		4694691.140	1554857.029	146.82
183	AOC5 SB5		4694708.500	1554852.504	146.76
184	AOC5 SB15/SB16		4694774.334	1554911.088	145.05
185	AOC5 SB8		4694774.170	1554874.521	144.99
186	AOC1 SB8		4694791.419	1555145.451	140.
187	AOC1 SB9		4694761.684	1555209.355	138.61
188	AOC1 SB12		4694821.248	1555206.963	136.95
189	AOC1 SB11		4694725.520	1555279.057	138.83
190	AOC1 SW1		4694858.172	1555279.804	133.76
191	AOC1 SB13		4694930.608	1555236.075	131.71
192	SS07 SS2		4696078.120	1556237.397	49.06
193	SS07 SS1		4696114.884	1556262.521	48.11
194	SS07 SW3/SD3		4696047.930	1556330.308	39.70
195	SS07 SW2/SD2		4696347.907	1556659.064	40.18
196	SS07 SW1/SD1		4695721.847	1556475.262	39.95
197	BLM MON. 1/4 COR SEC 28/27		4695085.218	1552948.444	0.00
198	BLM MON. WCMC S28/S27		4694867.996	1552948.667	0.00
199	KOTZEBUE ASTRO AZ MK		4702455.183	1554660.648	0.00

APPENDIX D – AQUIFER TEST DATA

MONITORING WELL

ST05-MW4

ST05MW4 SLUGTEST

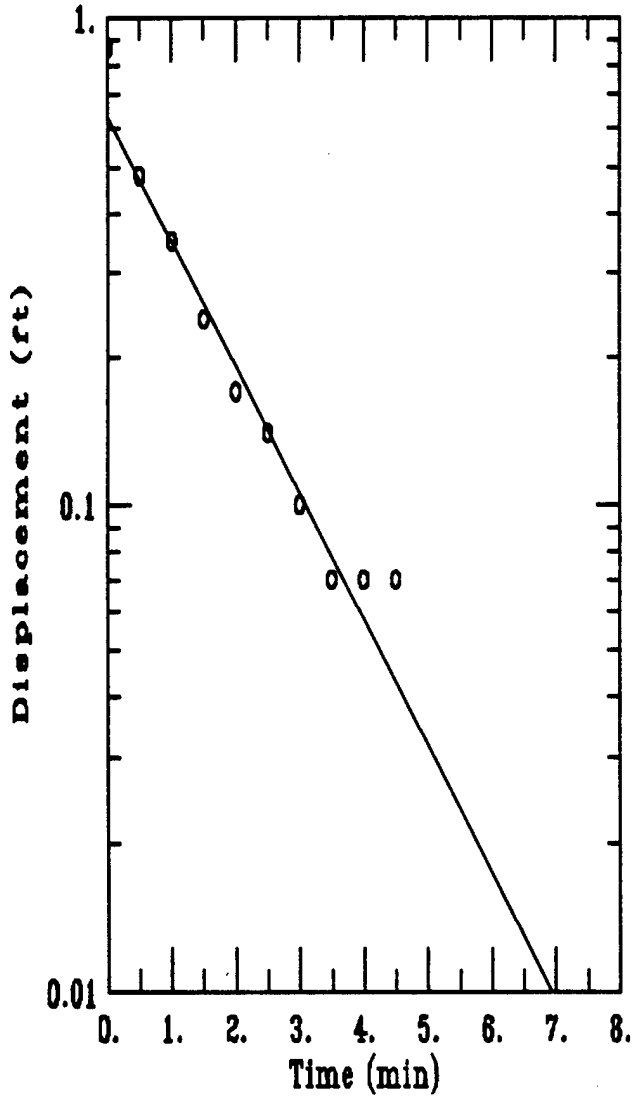

DATA SET:
ST05MW4E.DAT
02/03/95

AQUIFER TYPE:
Unconfined

SOLUTION METHOD:
Bouwer-Rice

ESTIMATED PARAMETERS:
K = 0.003514 ft/min
y0 = 0.6303 ft

TEST DATA:
H0 = 0.87 ft
rc = 0.185 ft
rw = 0.34 ft
L = 4.75 ft
b = 6.28 ft
H = 4.32 ft

<<

Model Residuals:

Time	Observed	Calculated	Residual	Weight
0.5	0.48	0.46755	0.012455	1
1	0.35	0.34684	0.0031626	1
1.5	0.24	0.25729	-0.017293	1
2	0.17	0.19087	-0.020867	1
2.5	0.14	0.14159	-0.0015898	1
3	0.1	0.10504	-0.005035	1
3.5	0.07	0.077918	-0.0079177	1
4	0.07	0.057801	0.012199	1
4.5	0.07	0.042879	0.027121	1
5	0.03	0.031808	-0.0018084	1
5.5	0.03	0.023596	0.0064037	1
6	0.03	0.017504	0.012496	1
6.5	0.03	0.012985	0.017015	1
7	0.03	0.0096328	0.020367	1
7.5	0.03	0.0071458	0.022854	1
8	0.03	0.005301	0.024699	1

RESULTS FROM VISUAL CURVE MATCHING

VISUAL MATCH PARAMETER ESTIMATES

	Estimate
K =	3.5141E-003
y0 =	6.3026E-001

<<

Date Thursday August 4, 1994 10:52 AM
PlotFile D:\KOTZEBUE\SLUGTEST\ST05MW401.PRN
DataFile D:\KOTZEBUE\SLUGTEST\ST05MW4.HEX

Time of First Log in Specified Window
********* *********

Injection Test

Time	Change	Relative
0.00	3.88	0.00
0.50	5.16	1.28
1.00	4.40	0.52
1.50	3.98	0.10
2.00	4.16	0.28
2.50	4.05	0.17
3.00	4.12	0.24
3.50	4.05	0.17
4.00	4.02	0.14
4.50	4.02	0.14
5.00	4.02	0.14
5.50	3.98	0.10
6.00	3.95	0.07
6.50	3.95	0.07
7.00	3.95	0.07
7.50	3.95	0.07
8.00	3.95	0.07
8.50	3.92	0.04
9.00	3.95	0.07
9.50	3.95	0.07
10.00	3.95	0.07
10.50	3.95	0.07
11.00	3.92	0.04
11.50	3.92	0.04
12.00	3.92	0.04
12.50	3.92	0.04
13.00	3.92	0.04
13.50	3.92	0.04
14.00	3.92	0.04
14.50	3.88	0.00

Extraction Test

Time	Change	Relative
0.00	3.88	-0.00
0.50	3.85	0.03
1.00	3.26	0.62
1.50	3.01	[illegible]
2.00	3.40	[illegible]
2.50	3.53	[illegible]
3.00	3.64	[illegible]
3.50	3.71	[illegible]
4.00	3.74	[illegible]
4.50	3.78	[illegible]
5.00	3.81	[illegible]
5.50	3.81	[illegible]
6.00	3.81	[illegible]
6.50	3.85	[illegible]
7.00	3.85	[illegible]
7.50	3.85	[illegible]
8.00	3.85	[illegible]
8.50	3.85	[illegible]
9.00	3.85	[illegible]
9.50	3.85	[illegible]
10.00	3.88	[illegible]
10.50	3.85	0.03
11.00	3.85	0.03
11.50	3.88	-0.00
12.00	3.88	-0.00
12.50	3.85	0.03
13.00	3.88	-0.00

15.00	3.88	0.00
15.50	3.92	0.04
16.00	3.92	0.04
16.50	3.92	0.04
17.00	3.92	0.04
17.50	3.88	0.00
18.00	3.92	0.04
18.50	3.92	0.04
19.00	3.92	0.04
19.50	3.92	0.04
20.00	3.92	0.04
20.50	3.92	0.04
21.00	3.92	0.04
21.50	3.92	0.04
22.00	3.92	0.04
22.50	3.92	0.04
23.00	3.92	0.04
23.50	3.88	0.00

MONITORING WELL

ST05-MW5

ST05MW5 SLUGTEST

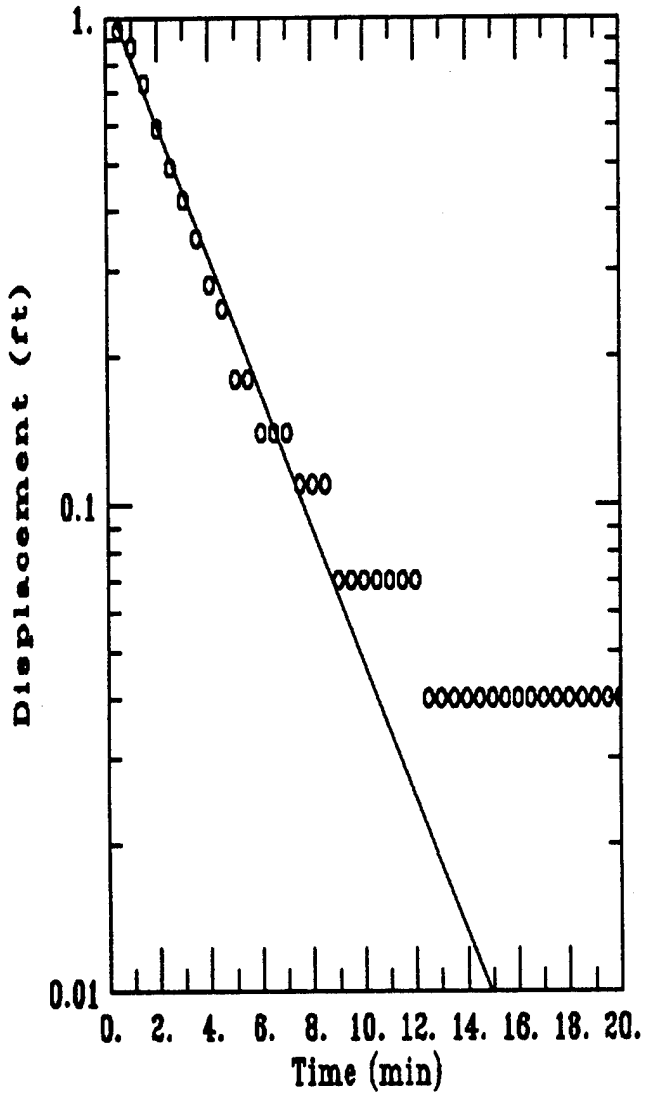

DATA SET:
ST05MW5E.DAT
02/03/95

AQUIFER TYPE:
Unconfined

SOLUTION METHOD:
Bouwer-Rice

ESTIMATED PARAMETERS:
K = 0.001825 ft/min
y0 = 1.124 ft

TEST DATA:
H0 = 1.15 ft
rc = 0.185 ft
rw = 0.34 ft
L = 4.75 ft
b = 8.36 ft
H = 4.35 ft

<<

Model Residuals:

Time	Observed	Calculated	Residual	Weight
0.5	0.94	0.95925	-0.019249	1
1	0.87	0.81858	0.051425	1
1.5	0.73	0.69853	0.031468	1
2	0.59	0.59609	-0.0060925	1
2.5	0.49	0.50868	-0.018676	1
3	0.42	0.43408	-0.014079	1
3.5	0.35	0.37042	-0.020421	1
4	0.28	0.3161	-0.036099	1
4.5	0.25	0.26974	-0.019743	1
5	0.18	0.23019	-0.050186	1
5.5	0.18	0.19643	-0.016429	1
6	0.14	0.16762	-0.027623	1
6.5	0.14	0.14304	-0.0030411	1
7	0.14	0.12206	0.017936	1
7.5	0.11	0.10416	0.0058365	1
8	0.11	0.088888	0.021112	1
8.5	0.11	0.075853	0.034147	1
9	0.07	0.064729	0.0052711	1
9.5	0.07	0.055236	0.014764	1
10	0.07	0.047136	0.022864	1
10.5	0.07	0.040224	0.029776	1
11	0.07	0.034325	0.035675	1
11.5	0.07	0.029291	0.040709	1
12	0.07	0.024996	0.045004	1
12.5	0.04	0.02133	0.01867	1
13	0.04	0.018202	0.021798	1
13.5	0.04	0.015533	0.024467	1
14	0.04	0.013255	0.026745	1
14.5	0.04	0.011311	0.028689	1
15	0.04	0.0096522	0.030348	1
15.5	0.04	0.0082367	0.031763	1
16	0.04	0.0070288	0.032971	1
16.5	0.04	0.005998	0.034002	1
17	0.04	0.0051184	0.034882	1
17.5	0.04	0.0043678	0.035632	1
18	0.04	0.0037273	0.036273	1
18.5	0.04	0.0031807	0.036819	1
19	0.04	0.0027142	0.037286	1
19.5	0.04	0.0023162	0.037684	1

RESULTS FROM VISUAL CURVE MATCHING

VISUAL MATCH PARAMETER ESTIMATES

	Estimate
K =	1.8248E-003

Date Sunday July 31, 1994 2:39 PM
PlotFile A:\ST05MW501.PRN
DataFile A:\ST05MW5

Time of First Log in Specified Window
********* *********

Injection Test

Time	Change	Relative
0.00	4.37	0.00
0.50	4.40	0.03
1.00	5.58	1.21
1.50	5.09	0.72
2.00	4.68	0.31
2.50	4.61	0.24
3.00	4.54	0.17
3.50	4.68	0.31
4.00	4.50	0.13
4.50	4.50	0.13
5.00	4.50	0.13
5.50	4.50	0.13
6.00	4.50	0.13
6.50	4.50	0.13
7.00	4.50	0.13
7.50	4.47	0.10
8.00	4.47	0.10
8.50	4.47	0.10
9.00	4.47	0.10
9.50	4.47	0.10
10.00	4.47	0.10
10.50	4.47	0.10
11.00	4.47	0.10
11.50	4.47	0.10
12.00	4.44	0.07
12.50	4.47	0.10
13.00	4.44	0.07
13.50	4.47	0.10
14.00	4.44	0.07
14.50	4.47	0.10
15.00	4.44	0.07

Extraction Test

Time	Change	Relative
0.00	4.37	0.00
0.50	4.30	0.07
1.00	3.22	1.15
1.50	3.43	0.94
2.00	3.50	0.87
2.50	3.64	0.73
3.00	3.78	0.59
3.50	3.88	0.49
4.00	3.95	0.42
4.50	4.02	0.35
5.00	4.09	0.28
5.50	4.12	0.25
6.00	4.19	0.18
6.50	4.19	0.18
7.00	4.23	0.14
7.50	4.23	0.14
8.00	4.23	0.14
8.50	4.26	0.11
9.00	4.26	0.11
9.50	4.26	0.11
10.00	4.30	0.07
10.50	4.30	0.07
11.00	4.30	0.07
11.50	4.30	0.07
12.00	4.30	0.07
12.50	4.30	0.07
13.00	4.30	0.07
13.50	4.33	0.04
14.00	4.33	0.04
14.50	4.33	0.04
15.00	4.33	0.04

15.50	4.44	0.07
16.00	4.44	0.07
16.50	4.44	0.07
17.00	4.44	0.07
17.50	4.44	0.07
18.00	4.44	0.07
18.50	4.44	0.07
19.00	4.44	0.07
19.50	4.44	0.07
20.00	4.44	0.07
20.50	4.44	0.07
21.00	4.44	0.07
21.50	4.44	0.07
22.00	4.44	0.07
22.50	4.44	0.07
23.00	4.40	0.03
23.50	4.44	0.07
24.00	4.44	0.07
24.50	4.44	0.07
25.00	4.40	0.03
25.50	4.40	0.03
26.00	4.44	0.07
26.50	4.40	0.03
27.00	4.40	0.03
27.50	4.40	0.03
28.00	4.40	0.03
28.50	4.40	0.03
29.00	4.40	0.03
29.50	4.40	0.03
30.00	4.40	0.03
30.50	4.40	0.03
31.00	4.40	0.03
31.50	4.40	0.03
32.00	4.40	0.03
32.50	4.40	0.03
33.00	4.40	0.03
33.50	4.40	0.03
34.00	4.40	0.03
34.50	4.40	0.03
35.00	4.40	0.03
35.50	4.40	0.03
36.00	4.40	0.03

15.50	4.30	0.07
16.00	4.33	0.04
16.50	4.33	0.04
17.00	4.33	0.04
17.50	4.33	0.04
18.00	4.33	0.04
18.50	4.33	0.04
19.00	4.33	0.04
19.50	4.33	0.04
20.00	4.33	0.04
20.50	4.33	0.04
21.00	4.33	0.04
21.50	4.33	0.04
22.00	4.33	0.04
22.50	4.33	0.04
23.00	4.33	0.04
23.50	4.33	0.04
24.00	4.33	0.04
24.50	4.33	0.04
25.00	4.33	0.04
25.50	4.33	0.04
26.00	4.33	0.04
26.50	4.33	0.04
27.00	4.33	0.04
27.50	4.33	0.04
28.00	4.33	0.04
28.50	4.33	0.04
29.00	4.33	0.04
29.50	4.33	0.04
30.00	4.33	0.04
30.50	4.33	0.04
31.00	4.37	0.00
31.50	4.37	0.00

36.50	4.37	-0.00
37.00	4.44	0.07
37.50	4.40	0.03
38.00	4.40	0.03
38.50	4.40	0.03
39.00	4.40	0.03
39.50	4.40	0.03
40.00	4.47	0.10
40.50	4.40	0.03
41.00	4.40	0.03
41.50	4.40	0.03
42.00	4.40	0.03
42.50	4.40	0.03
43.00	4.33	-0.04
43.50	4.37	-0.00
44.00	4.40	0.03
44.50	4.40	0.03
45.00	4.40	0.03
45.50	4.40	0.03
46.00	4.40	0.03
46.50	4.40	0.03
47.00	4.40	0.03
47.50	4.37	-0.00

MONITORING WELL

ST05-MW6

ST05MW6 SLUG TEST

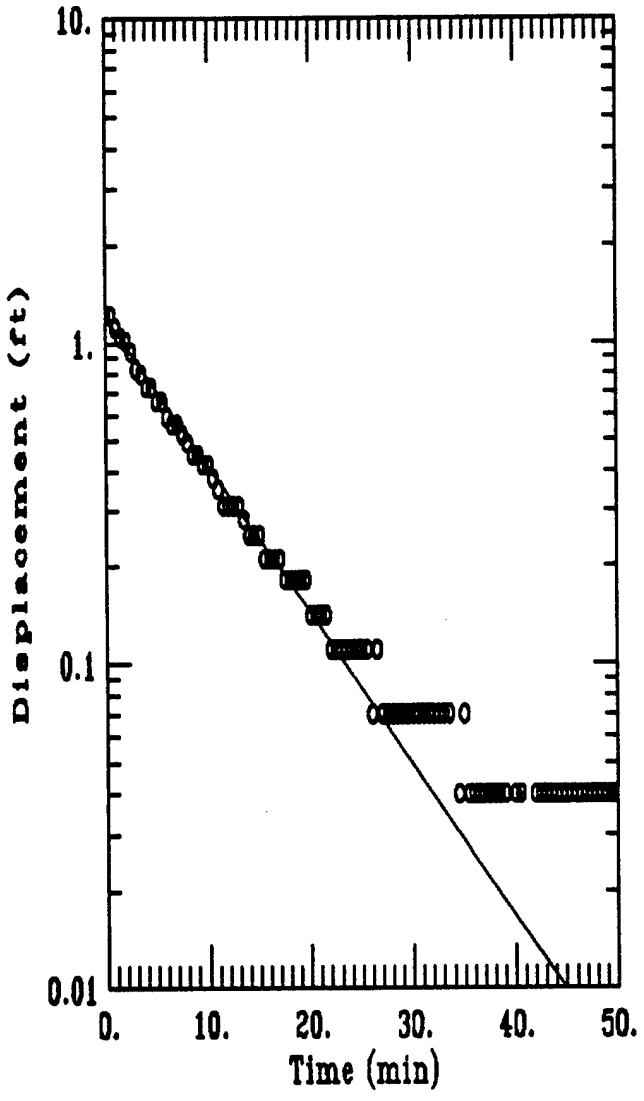

DATA SET:
ST05MW6E.DAT
02/03/95

AQUIFER TYPE:
Unconfined

SOLUTION METHOD:
Bouwer-Rice

ESTIMATED PARAMETERS:
K = 0.0006744 ft/min
y0 = 1.197 ft

TEST DATA:
H0 = 1.22 ft
rc = 0.185 ft
rw = 0.34 ft
L = 4.75 ft
b = 8.45 ft
H = 5.92 ft

<<

Model Residuals:

Time	Observed	Calculated	Residual	Weight
0.5	1.22	1.1346	0.085386	1
1	1.11	1.0757	0.03433	1
1.5	1.04	1.0198	0.020212	1
2	1.01	0.96681	0.04319	1
2.5	0.94	0.91658	0.023417	1
3	0.83	0.86897	-0.038966	1
3.5	0.8	0.82382	-0.023823	1
4	0.73	0.78102	-0.051025	1
4.5	0.73	0.74045	-0.01045	1
5	0.66	0.70198	-0.041983	1
5.5	0.66	0.66551	-0.0055146	1
6	0.59	0.63094	-0.040941	1
6.5	0.56	0.59816	-0.038163	1
7	0.56	0.56709	-0.007088	1
7.5	0.52	0.53763	-0.017627	1
8	0.49	0.5097	-0.019697	1
8.5	0.45	0.48322	-0.033218	1
9	0.45	0.45811	-0.0081147	1
9.5	0.42	0.43432	-0.014315	1
10	0.42	0.41175	0.0082476	1
10.5	0.38	0.39036	-0.010362	1
11	0.35	0.37008	-0.020082	1
11.5	0.31	0.35086	-0.040856	1
12	0.31	0.33263	-0.022629	1
12.5	0.31	0.31535	-0.0053486	1
13	0.31	0.29897	0.011034	1
13.5	0.28	0.28343	-0.0034346	1
14	0.25	0.26871	-0.01871	1
14.5	0.25	0.25475	-0.0047503	1
15	0.25	0.24152	0.0084841	1
15.5	0.21	0.22897	-0.018969	1
16	0.21	0.21707	-0.0070739	1
16.5	0.21	0.2058	0.0042032	1
17	0.21	0.19511	0.014894	1
17.5	0.18	0.18497	-0.0049697	1
18	0.18	0.17536	0.0046396	1
18.5	0.18	0.16625	0.01375	1
19	0.18	0.15761	0.022387	1
19.5	0.18	0.14943	0.030575	1
20	0.14	0.14166	-0.0016626	1
20.5	0.14	0.1343	0.0056968	1
21	0.14	0.12733	0.012674	1
21.5	0.14	0.12071	0.019289	1
22	0.11	0.11444	-0.0044403	1
22.5	0.11	0.1085	0.0015049	1
23	0.11	0.10286	0.0071413	1
23.5	0.11	0.097515	0.012485	1
24	0.11	0.092449	0.017551	1
24.5	0.11	0.087646	0.022354	1

25	0.11	0.083093	0.026907	1
25.5	0.11	0.078776	0.031224	1
26	0.07	0.074684	-0.0046838	1
26.5	0.11	0.070804	0.039196	1
27	0.07	0.067126	0.0028743	1
27.5	0.07	0.063638	0.0063616	1
28	0.07	0.060332	0.0096676	1
28.5	0.07	0.057198	0.012802	1
29	0.07	0.054227	0.015773	1
29.5	0.07	0.051409	0.018591	1
30	0.07	0.048739	0.021261	1
30.5	0.07	0.046207	0.023793	1
31	0.07	0.043806	0.026194	1
31.5	0.07	0.041531	0.028469	1
32	0.07	0.039373	0.030627	1
32.5	0.07	0.037328	0.032672	1
33	0.07	0.035388	0.034612	1
33.5	0.07	0.03355	0.03645	1
34	0.04	0.031807	0.0081931	1
34.5	0.04	0.030155	0.0098454	1
35	0.07	0.028588	0.041412	1
35.5	0.04	0.027103	0.012897	1
36	0.04	0.025695	0.014305	1
36.5	0.04	0.02436	0.01564	1
37	0.04	0.023094	0.016906	1
37.5	0.04	0.021895	0.018105	1
38	0.04	0.020757	0.019243	1
38.5	0.04	0.019679	0.020321	1
39	0.04	0.018657	0.021343	1
40	0.04	0.016768	0.023232	1
40.5	0.04	0.015897	0.024103	1
42	0.04	0.013546	0.026454	1
42.5	0.04	0.012842	0.027158	1
43	0.04	0.012175	0.027825	1
43.5	0.04	0.011543	0.028457	1
44	0.04	0.010943	0.029057	1
44.5	0.04	0.010375	0.029625	1
45	0.04	0.0098356	0.030164	1
45.5	0.04	0.0093247	0.030675	1
46	0.04	0.0088403	0.03116	1
46.5	0.04	0.008381	0.031619	1
47	0.04	0.0079456	0.032054	1
47.5	0.04	0.0075328	0.032467	1
48	0.04	0.0071415	0.032859	1
48.5	0.04	0.0067705	0.03323	1
49	0.04	0.0064188	0.033581	1
49.5	0.04	0.0060853	0.033915	1
50	0.04	0.0057692	0.034231	1

RESULTS FROM VISUAL CURVE MATCHING

VISUAL MATCH PARAMETER ESTIMATES

	Estimate
K =	6.7442E-004
y0 =	1.1968E+000

<<

Date Sunday July 31, 1994 2:40 PM
PlotFile A:\ST05MW601.PRN
DataFile A:\ST05MW6

Time of First Log in Specified Window
********* *********

Injection Test

Time	Change	Relative
0.00	5.72	-0.00
0.50	6.20	0.48
1.00	6.96	1.24
1.50	7.03	1.31
2.00	6.93	1.21
2.50	6.58	0.86
3.00	6.76	1.04
3.50	6.62	0.90
4.00	6.48	0.76
4.50	6.44	0.72
5.00	6.41	0.69
5.50	6.38	0.66
6.00	6.34	0.62
6.50	6.31	0.59
7.00	6.27	0.55
7.50	6.27	0.55
8.00	6.24	0.52
8.50	6.20	0.48
9.00	6.17	0.45
9.50	6.13	0.41
10.00	6.10	0.38
10.50	6.10	0.38
11.00	6.06	0.34
11.50	6.06	0.34
12.00	6.03	0.31
12.50	6.03	0.31
13.00	5.99	0.27
13.50	5.99	0.27
14.00	5.96	0.24
14.50	5.96	0.24

Extraction Test

Time	Change	Relative
0.00	5.72	0.00
0.50	5.58	0.14
1.00	5.20	0.52
1.50	5.20	0.52
2.00	4.50	1.22
2.50	4.50	1.22
3.00	4.61	1.11
3.50	4.68	1.04
4.00	4.71	1.01
4.50	4.78	0.94
5.00	4.89	0.83
5.50	4.92	0.80
6.00	4.99	0.73
6.50	4.99	0.73
7.00	5.06	0.66
7.50	5.06	0.66
8.00	5.13	0.59
8.50	5.16	0.56
9.00	5.16	0.56
9.50	5.20	0.52
10.00	5.23	0.49
10.50	5.27	0.45
11.00	5.27	0.45
11.50	5.30	0.42
12.00	5.30	0.42
12.50	5.34	0.38
13.00	5.37	0.35
13.50	5.41	0.31
14.00	5.41	0.31
14.50	5.41	0.31

15.00	5.89	0.17
15.50	5.93	0.21
16.00	5.93	0.21
16.50	5.89	0.17
17.00	5.89	0.17
17.50	5.89	0.17
18.00	5.89	0.17
18.50	5.89	0.17
19.00	5.86	0.14
19.50	5.86	0.14
20.00	5.82	0.10
20.50	5.82	0.10
21.00	5.82	0.10
21.50	5.82	0.10
22.00	5.82	0.10
22.50	5.82	0.10
23.00	5.79	0.07
23.50	5.79	0.07
24.00	5.79	0.07
24.50	5.79	0.07
25.00	5.79	0.07
25.50	5.79	0.07
26.00	5.79	0.07
26.50	5.79	0.07
27.00	5.75	0.03
27.50	5.75	0.03
28.00	5.75	0.03
28.50	5.75	0.03
29.00	5.75	0.03
29.50	5.75	0.03
30.00	5.75	0.03
30.50	5.75	0.03
31.00	5.75	0.03
31.50	5.75	0.03
32.00	5.75	0.03
32.50	5.72	-0.00
33.00	5.75	0.03
33.50	5.72	-0.00
34.00	5.75	0.03
34.50	5.72	-0.00

15.00	5.41	0.31
15.50	5.44	0.28
16.00	5.47	0.25
16.50	5.47	0.25
17.00	5.47	0.25
17.50	5.51	0.21
18.00	5.51	0.21
18.50	5.51	0.21
19.00	5.51	0.21
19.50	5.54	0.18
20.00	5.54	0.18
20.50	5.54	0.18
21.00	5.54	0.18
21.50	5.54	0.18
22.00	5.58	0.14
22.50	5.58	0.14
23.00	5.58	0.14
23.50	5.58	0.14
24.00	5.61	0.11
24.50	5.61	0.11
25.00	5.61	0.11
25.50	5.61	0.11
26.00	5.61	0.11
26.50	5.61	0.11
27.00	5.61	0.11
27.50	5.61	0.11
28.00	5.65	0.07
28.50	5.61	0.11
29.00	5.65	0.07
29.50	5.65	0.07
30.00	5.65	0.07
30.50	5.65	0.07
31.00	5.65	0.07
31.50	5.65	0.07
32.00	5.65	0.07
32.50	5.65	0.07
33.00	5.65	0.07
33.50	5.65	0.07
34.00	5.65	0.07
34.50	5.65	0.07
35.00	5.65	0.07
35.50	5.65	0.07

36.00	5.68	0.04
36.50	5.68	0.04
37.00	5.65	0.07
37.50	5.68	0.04
38.00	5.68	0.04
38.50	5.68	0.04
39.00	5.65	0.07
39.50	5.68	0.04
40.00	5.68	0.04
40.50	5.68	0.04
41.00	5.68	0.04
41.50	5.68	0.04
42.00	5.68	0.04
42.50	5.68	0.04
43.00	5.68	0.04
43.50	5.68	0.04
44.00	5.68	0.04
44.50	5.68	0.04
45.00	5.68	0.04
45.50	5.68	0.04
46.00	5.68	0.04
46.50	5.68	0.04
47.00	5.68	0.04
47.50	5.68	0.04
48.00	5.68	0.04
48.50	5.68	0.04
49.00	5.68	0.04
49.50	5.68	0.04
50.00	5.68	0.04
50.50	5.68	0.04
51.00	5.72	0.00
51.50	5.68	0.04
52.00	5.68	0.04
52.50	5.68	0.04
53.00	5.68	0.04
53.50	5.68	0.04
54.00	5.68	0.04
54.50	5.68	0.04
55.00	5.68	0.04
55.50	5.68	0.04
56.00	5.68	0.04
56.50	5.68	0.04

57.00	5.72	0.00
57.50	5.68	0.04
58.00	5.68	0.04
58.50	5.68	0.04
59.00	5.68	0.04
59.50	5.68	0.04
60.00	5.68	0.04
60.50	5.68	0.04
61.00	5.68	0.04
61.50	5.68	0.04
62.00	5.72	0.00

APPENDIX E – GEOTECHNICAL DATA REPORT

LABORATORY INDEX TESTING SUMMARY
KOTZEBUE LONG RANGE RADAR STATION

Boring No.	Sample No.	Depth Interval (ft.)		Moisture Content	Bulk Density	Dry Density	Atterberg Limits			Shrinkage Limit	Shrinkage Ratio	Hydraulic Conductivity	U.S.C.	Grain Size Distribution		
		Top	Bottom	(%)	(pcf)	(pcf)	LL	PL	PI	(%)		(cm/sec)		GR	SA	ML-CL
	AOC08-GT1-T			49.5	105.6	70.6						2.17×10^{-6}	ML	0.0	3.4	96.6
	AOC08-GT2-F			13.1	134.8	119.2						3.35×10^{-4}	GW	61.1	35.2	3.7
	AOC6-GT3-T			37.3	114.5	83.4						2.08×10^{-6}	ML	0.0	2.4	97.6
	AOC6-GT4-F			34.0	116.9	87.2						7.27×10^{-6}	ML	0.0	3.2	96.8
	AOC04-GT5-F			26.8	123.8	97.6						1.97×10^{-6}	ML	6.3	46.5	47.2
	AOC7-GT6-T			40.9	112.4	79.8						4.99×10^{-6}	ML	0.0	1.7	98.3
	STO5-GT7-B			11.6	138.3	124.0						2.36×10^{-4}	GM	46.9	37.7	15.4
	SSO2-GT8-B			13.2	121.8	107.6						8.39×10^{-5}	SW	43.7	55.1	1.2
	SSO2-GT10-B			12.5	136.4	121.2						2.82×10^{-4}	GW	48.9	48.1	3.0

GRAIN SIZE ANALYSIS (ASTM D422)

PROJECT NAME: KOTZEBUE LONG RANGE RADAR STATION
PROJECT NO.: 5123
CLIENT: TETRA-TECH, INC.
BOREHOLE/LOCATION:
SAMPLE NO.: AOC08-GT1-T
DEPTH:

DATE TESTED: 7/14/94
TESTED BY: RDL/DGB
REVIEWED BY: RJPC (R)
DESCRIPTION: SILT

EBA Engineering Inc.

Phone: (907) 561-4085 907 East Dowling Road, Suite 27, Anchorage, Alaska 99518 Fax: (907) 561-7071

SIEVE ANALYSIS TEST

SIEVE SIZE	DIAMETER (mm)	TOTAL % PASSING
6"	152.4	
4"	100	
3"	76.2	
2"	50.8	
1"	25.4	
3/4"	19	
1/2"	12.7	
3/8"	9.5	
# 4	4.75	
#10	2	100
# 20	0.85	99
# 40	0.425	98
# 60	0.25	98
#100	0.15	97
#200	0.075	96.6

HYDROMETER TEST

ELAPSED TIME	DIAMETER (mm)	TOTAL % PASSING
0		
0.5		
1	0.0352	83.0
2	0.0267	72.6
4	0.0199	60.9
8	0.0150	47.9
15	0.0115	37.5
30	0.0085	27.1
60	0.0062	20.6
250	0.0031	12.2
1440	0.0014	8.3

% GRAVEL: 0.0
% SAND: 3.4
% SILT/CLAY: 96.6

D60=
D30=
D10=
Cu=
Cc=

M.C.= 73.0%

USC: ML
FC:
% .02 mm 61.0

GRAIN SIZE DISTRIBUTION

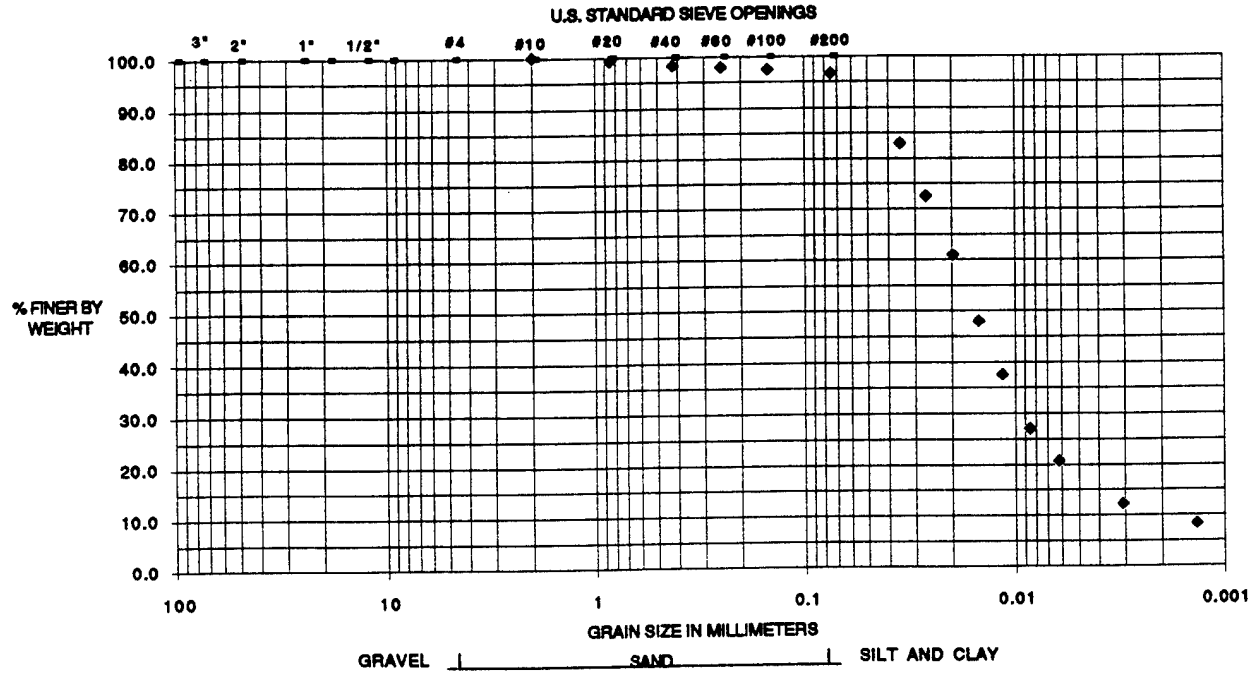

DATE PRINTED 7/19/94

REV6/93

GRAIN SIZE ANALYSIS (ASTM D422)

PROJECT NAME: KOTZEBUE LONG RANGE RADAR STATION
PROJECT NO.: 5123
CLIENT: TETRA-TECH INC.
BOREHOLE/LOCATION:
SAMPLE NO.: AOC08-GT2-F
DEPTH:

DATE TESTED: 7/14/94
TESTED BY: JL/RDL
REVIEWED BY: e
DESCRIPTION: Well-graded gravel with sand

EBA Engineering Inc.
Phone: (907) 561-4085 *907 East Dowling Road, Suite 27, Anchorage, Alaska 99518* *Fax: (907) 561-7071*

SIEVE ANALYSIS TEST

SIEVE SIZE	DIAMETER (mm)	TOTAL % PASSING
6"	152.4	
4"	100	
3"	76.2	
2"	50.8	100
1"	25.4	99
3/4"	19	95
1/2"	12.7	80
3/8"	9.5	64
# 4	4.75	39
#10	2	29
# 20	0.85	21
# 40	0.425	13
# 60	0.25	9
#100	0.15	5
#200	0.075	3.7

HYDROMETER TEST

ELAPSED TIME	DIAMETER (mm)	TOTAL % PASSING
0		
0.5		
1		
2		
4		
8		
15		
30		
60		
250		
1440		

% GRAVEL: 61.1
% SAND: 35.2
% SILT/CLAY: 3.7

D60= 8.75
D30= 2.39
D10= 0.30
Cu= 29.1
Cc= 2.2

M.C.= 3.6%

USC: GW
FC:
% .02 mm

GRAIN SIZE DISTRIBUTION

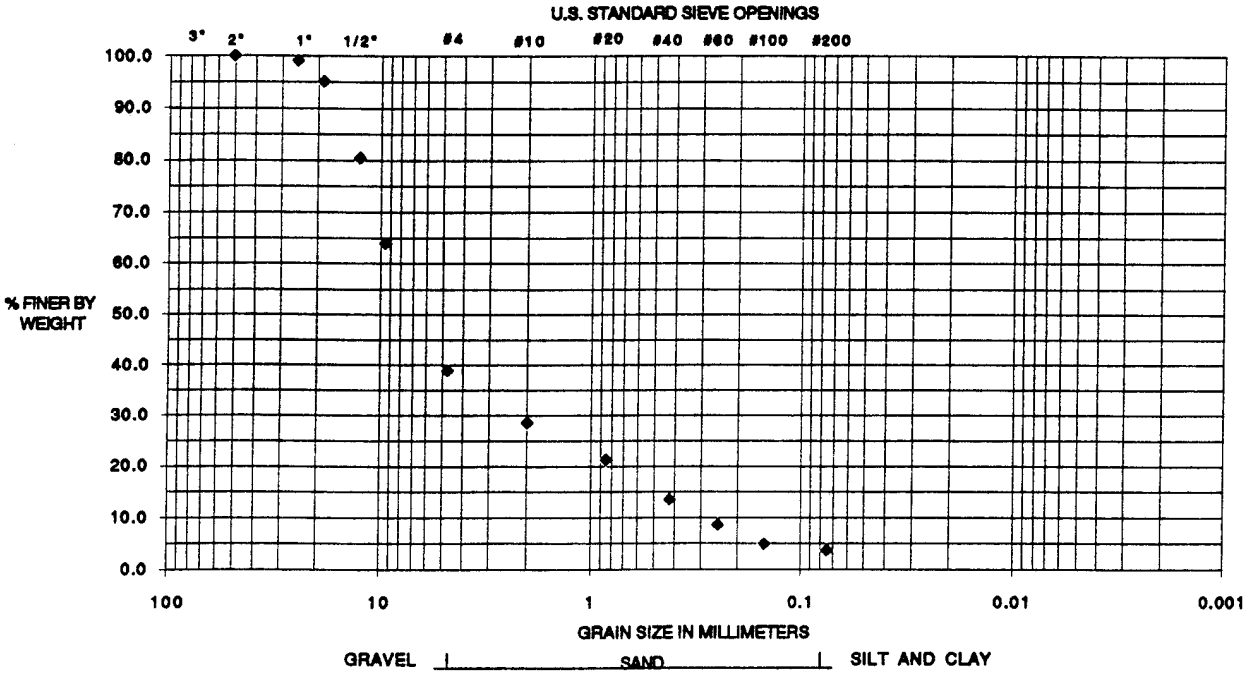

DATE PRINTED 7/18/94

REV6/93

GRAIN SIZE ANALYSIS (ASTM D422)

PROJECT NAME: KOTZEBUE LONG RANGE RADAR STATION
PROJECT NO.: 5123
CLIENT: TETRA-TECH, INC.
BOREHOLE/LOCATION:
SAMPLE NO.: AOC6-GT3-T
DEPTH:

DATE TESTED: 7/14/94
TESTED BY: RDL/DGB
REVIEWED BY: RJPC
DESCRIPTION: SILT

EBA Engineering Inc.

Phone: (907) 561-4085 907 East Dowling Road, Suite 27, Anchorage, Alaska 99518 Fax: (907) 561-7071

SIEVE ANALYSIS TEST

SIEVE SIZE	DIAMETER (mm)	TOTAL % PASSING
6"	152.4	
4"	100	
3"	76.2	
2"	50.8	
1"	25.4	
3/4"	19	
1/2"	12.7	
3/8"	9.5	
#4	4.75	
#10	2	100
#20	0.85	100
#40	0.425	99
#60	0.25	99
#100	0.15	98
#200	0.075	97.6

HYDROMETER TEST

ELAPSED TIME	DIAMETER (mm)	TOTAL % PASSING
0		
0.5		
1	0.0359	79.8
2	0.0270	68.2
4	0.0206	55.3
8	0.0153	44.9
15	0.0115	37.2
30	0.0084	29.4
60	0.0061	24.3
250	0.0030	17.2
1440	0.0013	10.8

% GRAVEL: 0.0
% SAND: 2.4
% SILT/CLAY: 97.6

D60=
D30=
D10=
Cu=
Cc=

M.C.= 63.4%

USC: ML
FC:
% .02 mm 54.3

GRAIN SIZE DISTRIBUTION

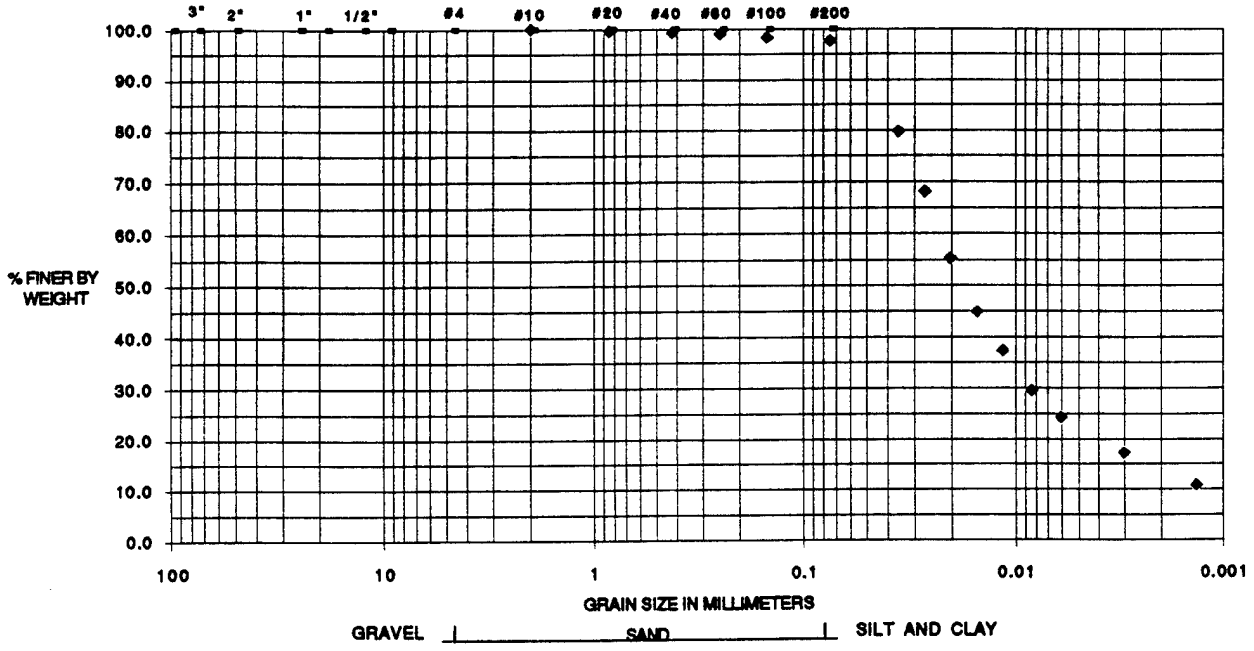

DATE PRINTED 7/19/94

REV6/93

GRAIN SIZE ANALYSIS (ASTM D422)

PROJECT NAME: KOTZEBUE LONG RANGE RADAR STATION
PROJECT NO.: 5123
CLIENT: TETRA-TECH, INC.
BOREHOLE/LOCATION:
SAMPLE NO.: AOC6-GT4-F
DEPTH:

DATE TESTED: 7/14/94
TESTED BY: RDL/DGB
REVIEWED BY: RJPC
DESCRIPTION: SILT

EBA Engineering Inc.

Phone: (907) 561-4085 *907 East Dowling Road, Suite 27, Anchorage, Alaska 99518* *Fax: (907) 561-7071*

SIEVE ANALYSIS TEST

SIEVE SIZE	DIAMETER (mm)	TOTAL % PASSING
6"	152.4	
4"	100	
3"	76.2	
2"	50.8	
1"	25.4	
3/4"	19	
1/2"	12.7	
3/8"	9.5	
#4	4.75	
#10	2	100
#20	0.85	100
#40	0.425	99
#60	0.25	98
#100	0.15	98
#200	0.075	96.8

HYDROMETER TEST

ELAPSED TIME	DIAMETER (mm)	TOTAL % PASSING
0		
0.5		
1	0.0352	77.3
2	0.0270	66.2
4	0.0203	55.1
8	0.0150	45.3
15	0.0115	35.5
30	0.0084	29.3
60	0.0061	24.4
250	0.0030	17.2
1440	0.0013	11.6

% GRAVEL: 0.0
% SAND: 3.2
% SILT/CLAY: 96.8

D60=
D30=
D10=
Cu=
Cc=

M.C.= 35.3%

USC: ML
FC:
% .02 mm 54.7

GRAIN SIZE DISTRIBUTION

U.S. STANDARD SIEVE OPENINGS

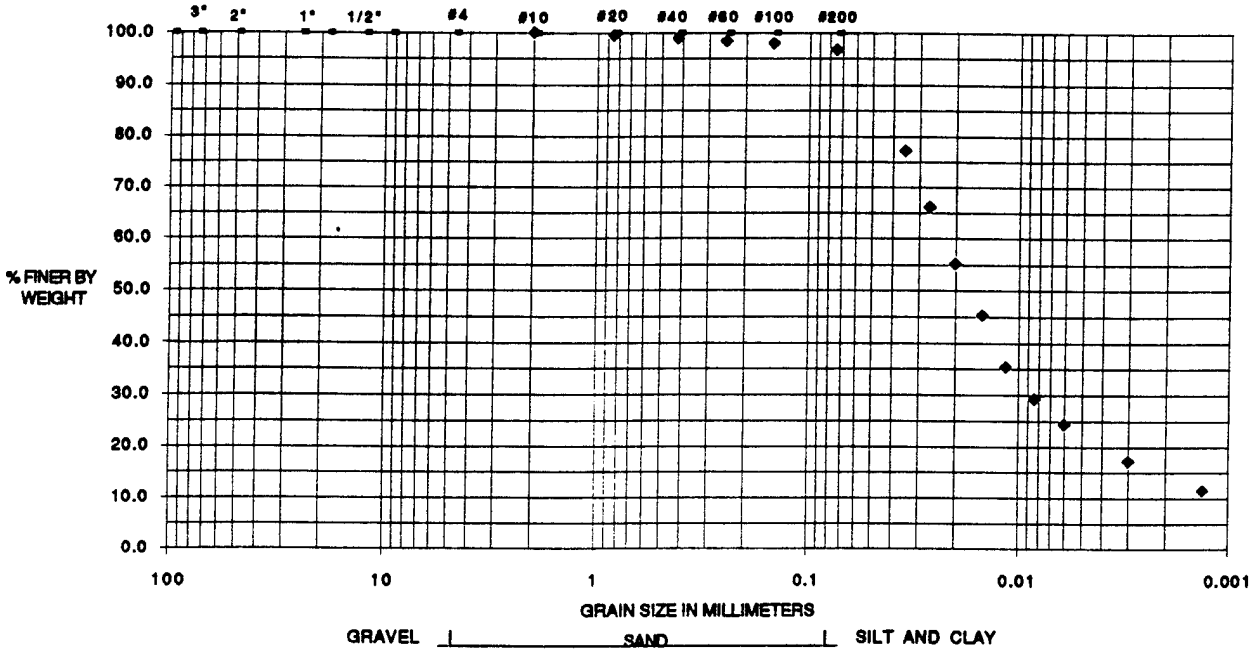

DATE PRINTED 7/19/94

REV6/93

GRAIN SIZE ANALYSIS (ASTM D422)

PROJECT NAME: KOTZEBUE LONG RANGE RADAR STATION
PROJECT NO.: 5123
CLIENT: TETRA-TECH, INC.
BOREHOLE/LOCATION:
SAMPLE NO.: AOC04-GT5-F
DEPTH:

DATE TESTED: 7/14/94
TESTED BY: RDL/DGB
REVIEWED BY: RJPC
DESCRIPTION: SANDY SILT

EBA Engineering Inc.

Phone: (907) 561-4085 907 East Dowling Road, Suite 27, Anchorage, Alaska 99518 Fax: (907) 561-7071

SIEVE ANALYSIS TEST

SIEVE SIZE	DIAMETER (mm)	TOTAL % PASSING
6"	152.4	
4"	100	
3"	76.2	
2"	50.8	
1"	25.4	
3/4"	19	100
1/2"	12.7	100
3/8"	9.5	99
# 4	4.75	94
#10	2	76
# 20	0.85	64
# 40	0.425	57
# 60	0.25	53
#100	0.15	49
#200	0.075	47.2

HYDROMETER TEST

ELAPSED TIME	DIAMETER (mm)	TOTAL % PASSING
0		
0.5		
1	0.0382	41.9
2	0.0287	35.6
4	0.0213	30.0
8	0.0156	24.5
15	0.0118	19.7
30	0.0086	15.7
60	0.0062	12.6
250	0.0031	8.8
1440	0.0013	5.9

% GRAVEL: 6.3
% SAND: 46.5
% SILT/CLAY: 47.2

D60= 0.61
D30=
D10=
Cu=
Cc=

M.C.= 29.4%

USC: ML
FC:
% .02 mm 28.9

GRAIN SIZE DISTRIBUTION

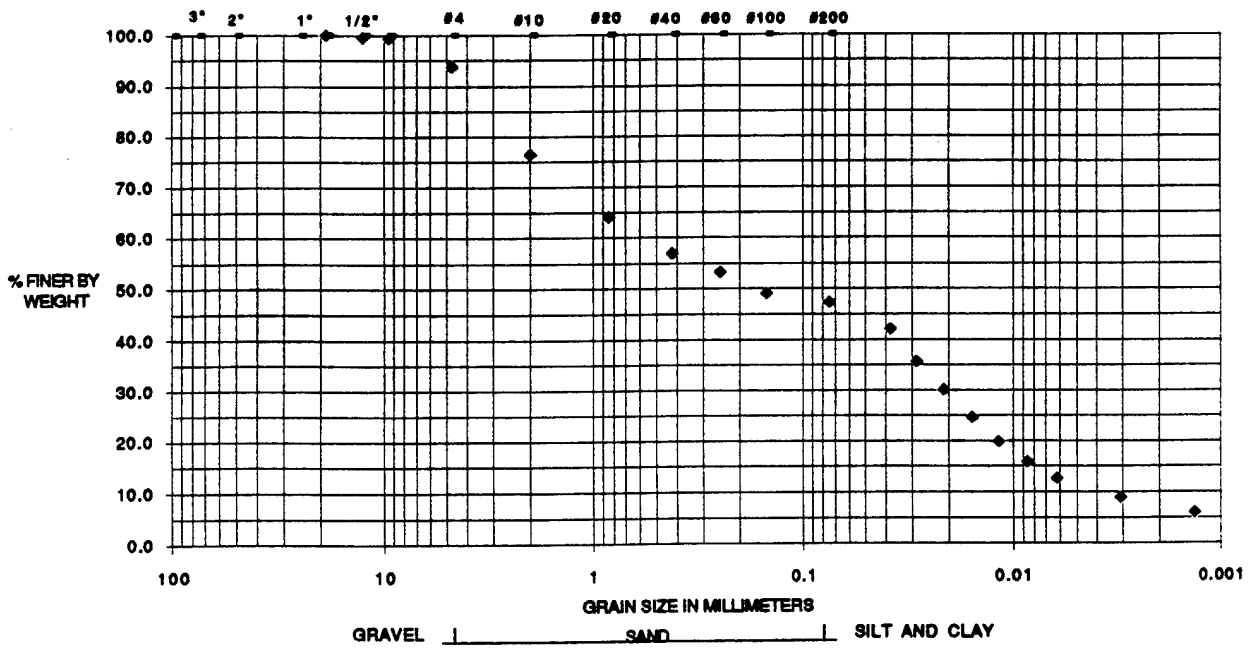

DATE PRINTED 7/19/94

REV8/93

GRAIN SIZE ANALYSIS (ASTM D422)

PROJECT NAME: KOTZEBUE LONG RANGE RADAR STATION
PROJECT NO.: 5123
CLIENT: TETRA-TECH, INC.
BOREHOLE/LOCATION:
SAMPLE NO.: AOC7-GT6-T
DEPTH:

DATE TESTED: 7/14/94
TESTED BY: RDL/DGB
REVIEWED BY: RJPC
DESCRIPTION: SILT

EBA Engineering Inc.

Phone: (907) 561-4085 *907 East Dowling Road, Suite 27, Anchorage, Alaska 99518* *Fax: (907) 561-7071*

SIEVE ANALYSIS TEST

SIEVE SIZE	DIAMETER (mm)	TOTAL % PASSING
6"	152.4	
4"	100	
3"	76.2	
2"	50.8	
1"	25.4	
3/4"	19	
1/2"	12.7	
3/8"	9.5	
#4	4.75	
#10	2	100
#20	0.85	100
#40	0.425	99
#60	0.25	99
#100	0.15	99
#200	0.075	98.3

HYDROMETER TEST

ELAPSED TIME	DIAMETER (mm)	TOTAL % PASSING
0		
0.5		
1	0.0344	82.5
2	0.0267	71.1
4	0.0199	59.6
8	0.0150	46.9
15	0.0115	38.0
30	0.0084	30.3
60	0.0061	24.0
250	0.0030	17.1
1440	0.0013	10.7

% GRAVEL: 0.0
% SAND: 1.7
% SILT/CLAY: 98.3

D60=
D30=
D10=
Cu=
Cc=

M.C.= 44.4%

USC: ML
FC:
% .02 mm 59.7

GRAIN SIZE DISTRIBUTION

U.S. STANDARD SIEVE OPENINGS

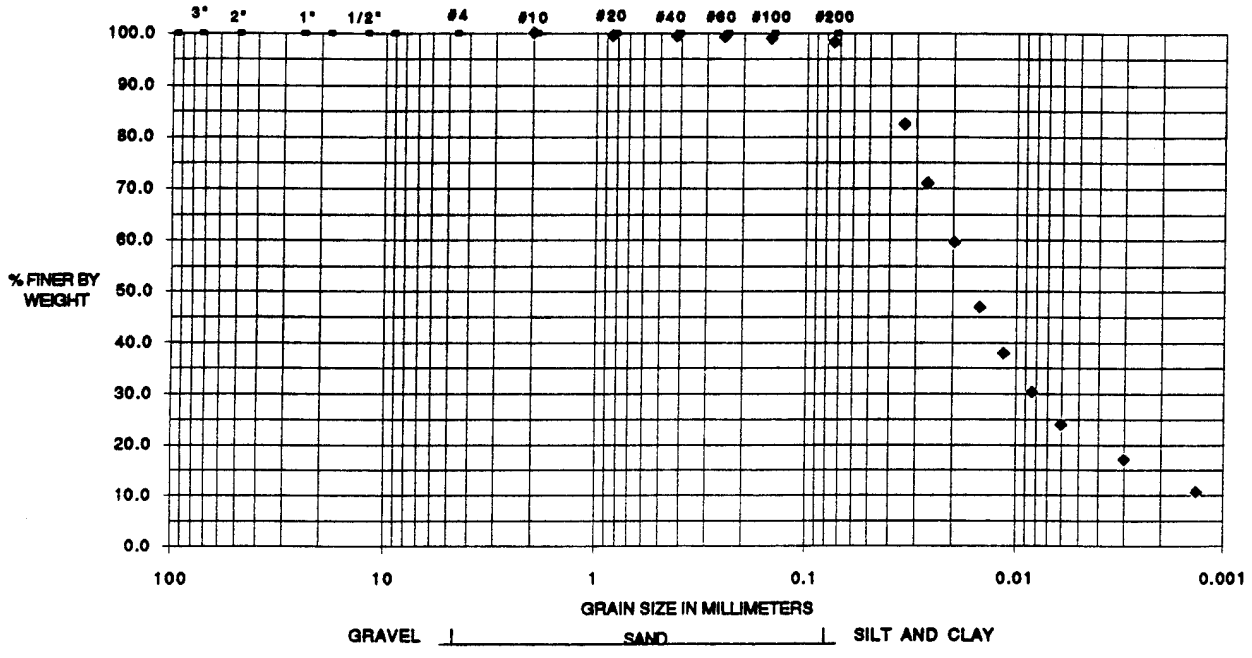

DATE PRINTED 7/19/94

REV6/93

GRAIN SIZE ANALYSIS (ASTM D422)

PROJECT NAME: KOTZEBUE LONG RANGE RADAR STATION
PROJECT NO.: 5123
CLIENT: TETRA-TECH, INC.
BOREHOLE/LOCATION:
SAMPLE NO.: ST05-GT7-B
DEPTH:

DATE TESTED: 7/14/94
TESTED BY: RDL/JL
REVIEWED BY: RJPC
DESCRIPTION: SILTY GRAVEL WITH SAND

EBA Engineering Inc.

Phone: (907) 561-4085 907 East Dowling Road, Suite 27, Anchorage, Alaska 99518 Fax: (907) 561-7071

SIEVE ANALYSIS TEST

SIEVE SIZE	DIAMETER (mm)	TOTAL % PASSING
6"	152.4	
4"	100	
3"	76.2	
2"	50.8	100
1"	25.4	97
3/4"	19	94
1/2"	12.7	85
3/8"	9.5	76
#4	4.75	53
#10	2	38
#20	0.85	31
#40	0.425	25
#60	0.25	20
#100	0.15	17
#200	0.075	15.4

HYDROMETER TEST

ELAPSED TIME	DIAMETER (mm)	TOTAL % PASSING
0		
0.5		
1	0.0437	13.8
2	0.0316	12.1
4	0.0228	10.4
8	0.0166	8.3
15	0.0123	7.1
30	0.0089	5.4
60	0.0064	4.4
250	0.0032	2.9
1440	0.0014	1.6

% GRAVEL: 46.9
% SAND: 37.7
% SILT/CLAY: 15.4

D60= 6.21
D30= 0.78
D10=
Cu=
Cc=

M.C.= 14.1%

USC: GM
FC:
% .02 mm 9.6

GRAIN SIZE DISTRIBUTION

U.S. STANDARD SIEVE OPENINGS

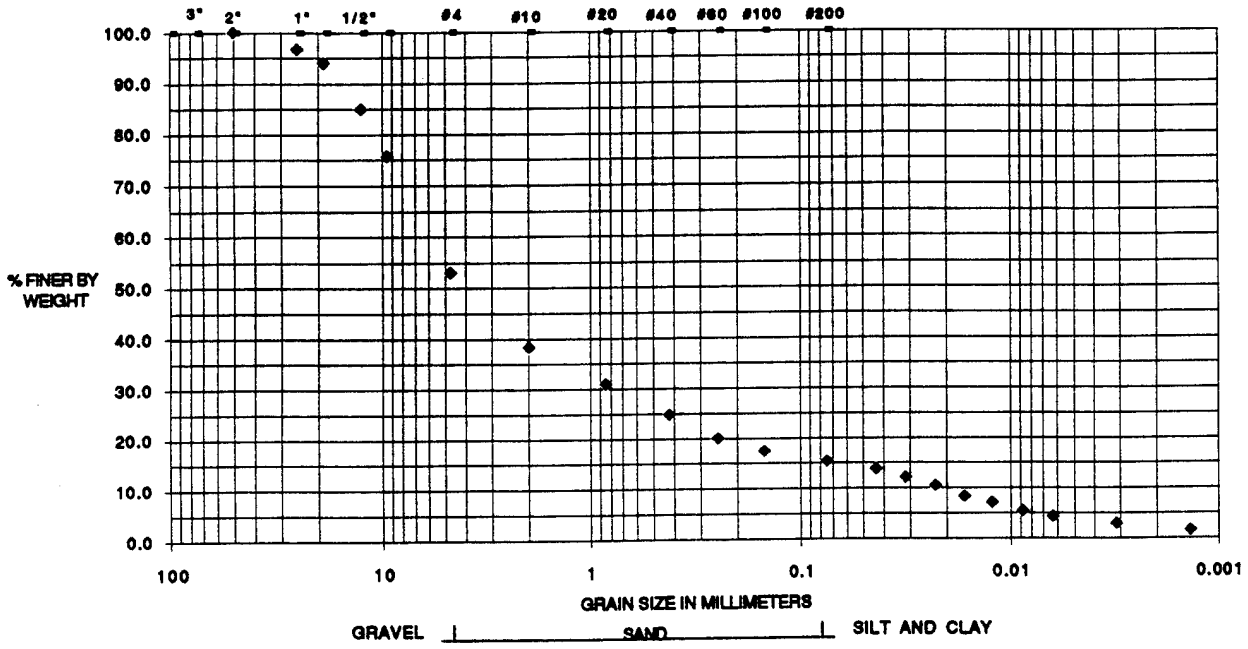

DATE PRINTED 7/19/94

REV6/93

GRAIN SIZE ANALYSIS (ASTM D422)

PROJECT NAME: KOTZEBUE LONG RANGE RADAR STATION
PROJECT NO.: 5123
CLIENT: TETRA-TECH INC.
BOREHOLE/LOCATION:
SAMPLE NO.: SS02-GT8-B
DEPTH:

DATE TESTED: 7/14/94
TESTED BY: DGB/JL
REVIEWED BY:
DESCRIPTION: Well-graded sand with gravel

EBA Engineering Inc.

Phone: (907) 561-4085 *907 East Dowling Road, Suite 27, Anchorage, Alaska 99518* *Fax: (907) 561-7071*

SIEVE ANALYSIS TEST

SIEVE SIZE	DIAMETER (mm)	TOTAL % PASSING
6"	152.4	
4"	100	
3"	76.2	
2"	50.8	100
1"	25.4	99
3/4"	19	96
1/2"	12.7	86
3/8"	9.5	75
# 4	4.75	56
#10	2	35
# 20	0.85	19
# 40	0.425	16
# 60	0.25	14
#100	0.15	5
#200	0.075	1.2

HYDROMETER TEST

ELAPSED TIME	DIAMETER (mm)	TOTAL % PASSING
0		
0.5		
1		
2		
4		
8		
15		
30		
60		
250		
1440		

% GRAVEL: 43.7
% SAND: 55.1
% SILT/CLAY: 1.2

D60= 5.71
D30= 1.66
D10= 0.21
Cu= 27.5
Cc= 2.3

M.C.= 9.7%

USC: SW
FC: N.F.S.
% .02 mm

GRAIN SIZE DISTRIBUTION

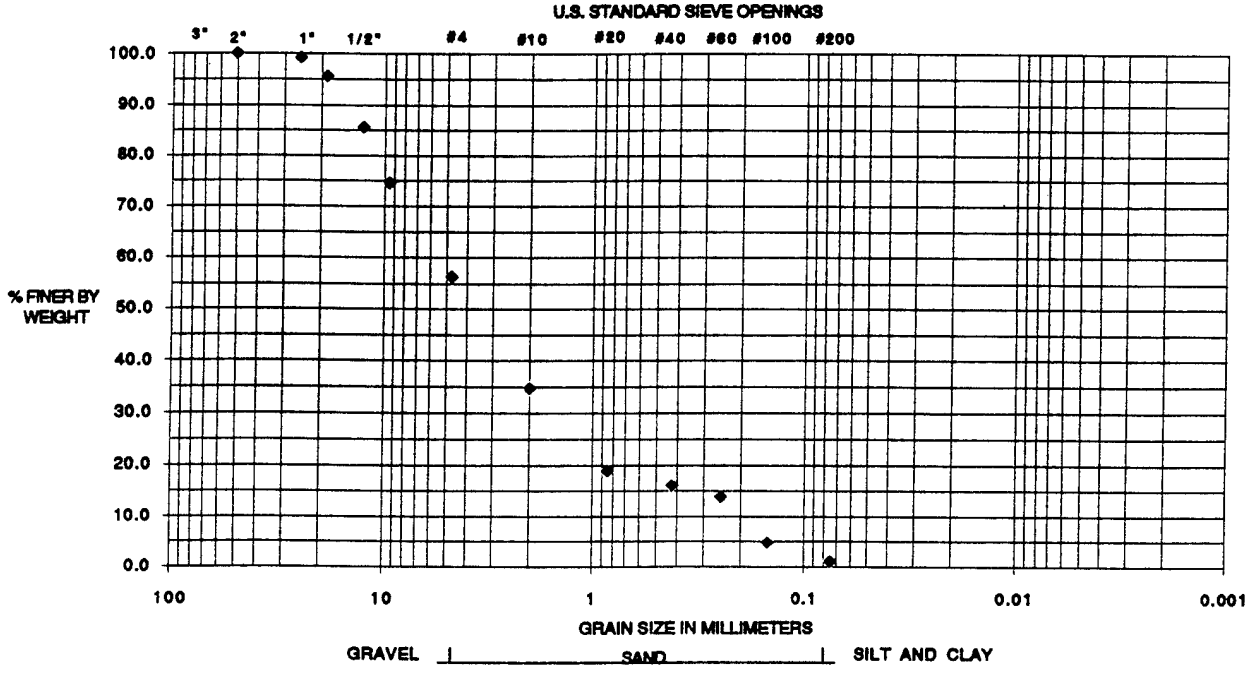

DATE PRINTED 7/18/94

REV6/93

GRAIN SIZE ANALYSIS (ASTM D422)

PROJECT NAME: KOTZEBUE LONG RANGE RADAR STATION
PROJECT NO.: 5123
CLIENT: TETRA-TECH INC.
BOREHOLE/LOCATION:
SAMPLE NO.: SS02-GT10-B
DEPTH:

DATE TESTED: 7/14/94
TESTED BY: DGB/JL
REVIEWED BY:
DESCRIPTION: Well-graded gravel with sand

EBA Engineering Inc.
Phone: (907) 561-4085 *907 East Dowling Road, Suite 27, Anchorage, Alaska 99518* *Fax: (907) 561-7071*

SIEVE ANALYSIS TEST

SIEVE SIZE	DIAMETER (mm)	TOTAL % PASSING
6"	152.4	
4"	100	
3"	76.2	
2"	50.8	
1"	25.4	100
3/4"	19	97
1/2"	12.7	88
3/8"	9.5	80
# 4	4.75	51
#10	2	27
# 20	0.85	16
# 40	0.425	11
# 60	0.25	8
#100	0.15	4
#200	0.075	3.0

HYDROMETER TEST

ELAPSED TIME	DIAMETER (mm)	TOTAL % PASSING
0		
0.5		
1		
2		
4		
8		
15		
30		
60		
250		
1440		

% GRAVEL: 48.9
% SAND: 48.1
% SILT/CLAY: 3.0

D60= 6.20
D30= 2.30
D10= 0.39
Cu= 16.1
Cc= 2.2

M.C.= 1.4%

USC: GW
FC:
% .02 mm

GRAIN SIZE DISTRIBUTION

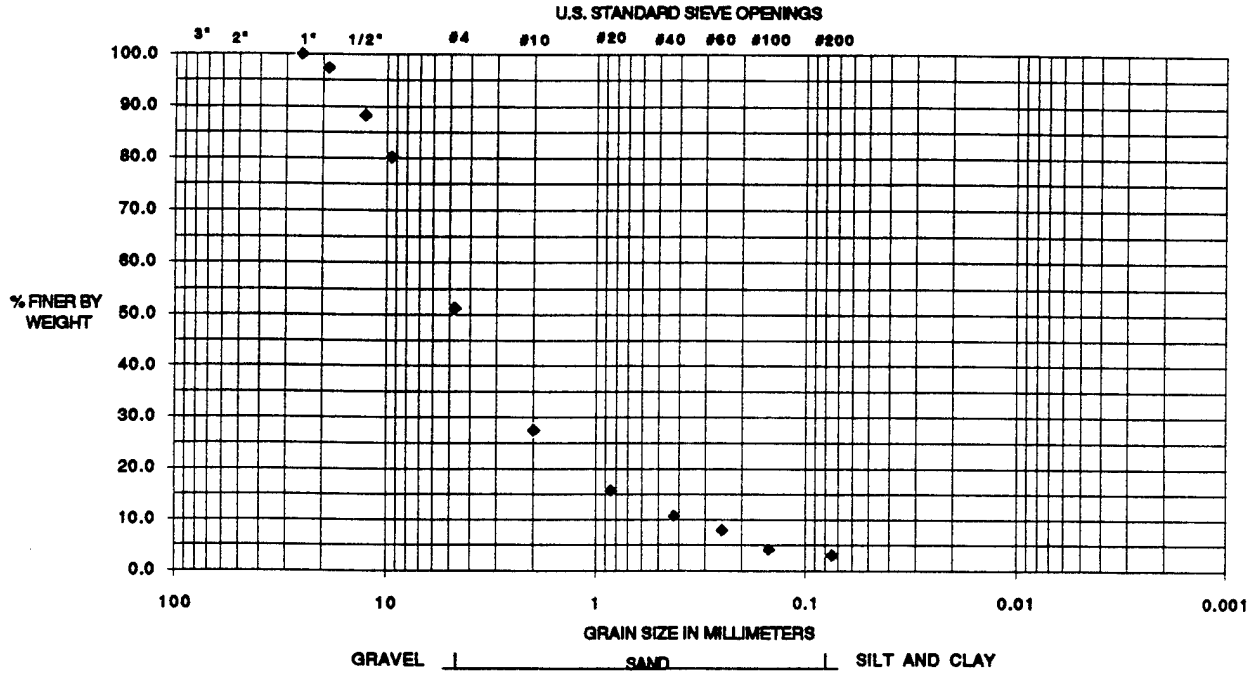

DATE PRINTED 7/18/94

REV6/93

APPENDIX F – GRADIOMETRIC SURVEY DESCRIPTION

GRID DESCRIPTIONS FOR GRADIOMETER SURVEY
Kotzebue LRRS Site
SS-02 Waste Accumulation Landfill
Survey Date 6/21/94

GRID POINTS	NOTES
A1-A4	Surface is gravel pad, no visible waste or staining, no metallic waste detected
A5	Surface gravel and grass cover, stained soil, minor metallic surface debris
A6-A8	Grass cover, no staining, surface debris, no buried metallic waste
A9	Buried metallic waste
A10-A11	Excavated pit with small quantity of standing water, surface debris
A12	Grass cover, buried metallic waste
A14-A15	Excavated Pit, no water
A16	Grass cover, no staining, no surface debris or buried metallic waste
A17	Grass cover, buried metallic waste
A18-A20	Grass cover, some minor surface debris
A21-A23	Grass cover, minor surface debris
A24-A25	Edge of excavated pit, minor surface debris
A26	Grass cover, buried metallic material (one location)
A27	Grass cover and gravel, no staining, surface debris
A28	Grass cover and gravel, no staining, surface debris, buried metallic waste
A29-A31	Gravel and grass cover, no staining, no surface debris

GRID POINTS	NOTES
A32	Gravel and grass cover, no staining, no surface debris, buried metallic waste
A33-A36	Gravel and grass cover, no staining, no buried metallic waste
A37-38	Nothing found
A39	Buried metallic waste (one location)
A40-A43	Minor metallic debris both surface and buried
A44	Shrubs and grass cover, buried metallic material
A45-A48	Shrubs and grass cover, minor surface debris
B1-B4	Gravel surface, some surface staining, minor metallic debris both surface and buried
B5-B9	Grass cover, minor surface debris
B10-B11	Excavated pit with buried metallic material at eastern edge
B12	Large mass of buried metallic debris
B13	Nothing found
B14-B15	Excavated pit, no water, no metallic waste
B16	Grass cover, nothing found
B17	Grass cover, buried metallic waste (one location)
B18-B23	Grass cover, minor metallic surface debris
B24	Excavated pit, no water, nothing found
B25-B26	Grass cover, nothing found
B27-B28	Grass cover, large volume of buried metallic waste
B29-B32	Gravel surface, no metallic material
B33	Low area of stained soil
B34-B35	Mound of gravel, no staining, minor surface debris
B36-B39	Gravel surface, nothing found

GRID POINTS	NOTES
B40-B44	Shrub cover, minor surface debris, small scattered bodies of buried metallic waste
B45-B46	Tall shrub cover, drums, metallic surface debris and buried metallic waste in mound
B47-B48	Tall shrub cover, nothing found
C1	Gravel surface, minor surface debris, stained soil
C2-C4	Gravel surface, minor surface debris
C5-C6	Grass cover, nothing found
C7	Grass cover, buried metallic waste, one visible drum
C8-C10	Grass cover, visible drums, black tar present on surface, large volume of buried metallic objects
C11-C13	Grass cover, small mounds present, metallic surface debris, buried metallic waste
C14-C15	Excavated pit, buried metallic waste
C16-C17	Grass cover with some bare soil, buried metallic material
C18	Large buried metallic mass
C19-C21	Grass cover, buried metallic objects
C22-C23	Grass cover, nothing found
C24-C25	Excavated pit, standing water
C26-C28	Grass cover, buried metallic waste, dog team present
C29-C32	Gravel surface, nothing found, dog team present
C33	Low spot with rust-stained soil, buried metallic waste
C34	Gravel mound, minor metallic debris both surface and buried
C35-C38	Surface debris, buried metallic waste

GRID POINTS	NOTES
C39-C41	Grass and Shrub cover, small mounds present, buried metallic waste
C42-C45	Shrub and grass cover, metallic surface debris, small volumes of buried metallic waste
C46	Shrub cover, drums visible, large volume of metallic waste
C47-C48	Shrub cover, nothing found
D1	Gravel surface, stained soil, minor metallic surface debris
D2-D3	Gravel surface, minor metallic surface debris, buried metallic waste at eastern edge of cell
D4	Gravel surface, minor metallic surface debris
D5-D7	Grass cover, minor amounts of metallic surface and buried debris, drum visible
D8-D9	Grass cover, buried metallic waste
D10	Excavated pit, metallic surface debris in pit (drums, food cans, pipe, etc.), car batteries
D11-D12	Excavated pit, metallic surface debris in pit (drums, food cans, pipe, etc.)
D13-D14	Grass cover, nothing found
D15	Excavated pit, metallic waste buried in pit
D16-D19	Grass cover, metallic surface debris, scattered bodies of buried metallic waste
D20	Grass cover, Small mounds containing buried metallic waste, visible drum
D21-D22	Grass cover, Small mounds containing buried metallic waste
D23-D25	Excavated pit with standing water
D26	Gravel and Grass cover, buried metal waste, dog team present
D27-D32	Dog team present

GRID POINTS	NOTES
D33-D34	Grass covered mounds, metallic surface debris, buried metallic waste
D35	Grass covered mounds, metallic surface debris, buried metallic waste, visible drum
D36	Grass covered mounds, metallic surface debris, large body of buried metallic waste
D37-D40	Grass and shrub cover, metallic surface debris, buried metallic waste
D41-D42	Shrub cover, metallic surface debris, buried metallic waste
D43	Shrub cover, metallic surface debris, buried metallic waste, visible drum
D44	Shrub cover, metallic surface debris, buried metallic waste, paint cans
D45-D46	Shrub cover, metallic surface debris, buried metallic waste
E1-E2	Gravel surface, buried drums and asphalt waste
E3-E4	Gravel and grass cover, metallic surface debris, buried metallic waste
E5	Shrub cover, buried metallic waste
E6-E8	Grass and shrub cover, nothing found
E9-E11	Small grass covered mounds, buried metallic waste
E12-E13	Grass cover, nothing found
E14-E15	Excavated pit, buried metallic waste in pit
E16-E23	Small grass covered mounds, minor surface debris, buried metallic waste, mounds scattered
E24	Excavated pit, no water
E25-E32	Shrub cover, assorted surface debris
E33-E36	Grass covered mounds containing large buried metallic objects

GRID POINTS	NOTES
F1-F4	Buried drums with asphalt waste
F5-F16	Assorted surface debris, scattered buried metallic waste
F36	Grass covered mounds, visible drums, buried metallic waste
F37	Grass covered mounds, buried metallic waste
F38	Grass covered mounds, visible drums, buried metallic waste
G2	Grass covered mound, buried metallic waste
G10	Grass covered mound, buried metallic waste

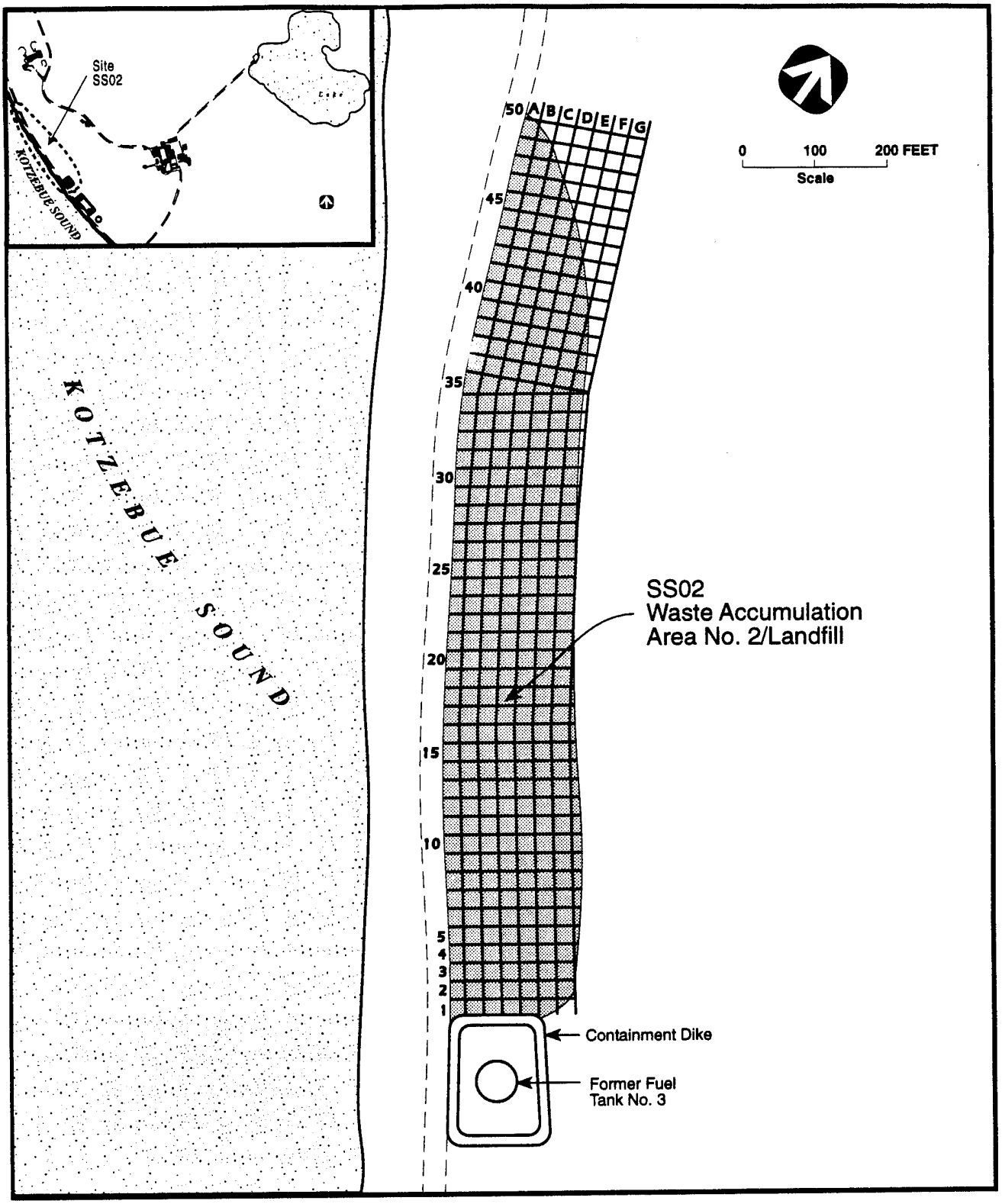

Figure 2-2. Survey Grid as Constructed for Gradiometric Survey at SS02 Waste Accumulation Area No. 2/Landfill, Kotzebue LRRS, Alaska.

APPENDIX G – FIELD QA/QC REPORT

TETRA TECH, INC.
348 West Hospitality Lane, Suite 300
San Bernardino, CA 92408-3216
Telephone (909) 381-1674
FAX (909) 889-1391

TO: Mr. Rick Osgood, Project Manager **DATE:** 09 August 1994

FROM: Arlen Saxton, Field Auditor, QA **APPROVAL**

SUBJECT: Various Field QA Audits of Kotzebue LRRS, Alaska and Field Audit of Hand-Auger Soil Sampling and Sediment Sampling at Site 2212, Spills 2 and 3.

DATE: 12 July 1994 **TIME:** 1045

CREW: Kurt Schmierer, Tetra Tech; Steve Moore, Ambler Exploration; Rob Helton, Ambler Exploration

OBSERVATIONS:

All soil sampling equipment was deconned at end of day prior to the sampling day, and wrapped in oil-free aluminum foil (split-spoon, brass sleeves, stainless steel bowls, and spoons and trays). All equipment was calibrated prior to mobilizing to drilling site. Worksite set up at an up-wind location from drillers. Mr. Kurt Schmierer is a registered geologist supervising the site. 2 1/2-inch ID hollow-stem auger was used. First sample at 2 1/2 feet to 4 feet. Split-spoon sampler prepared by Mr. Kurt Schmierer. No. SW8260 will be taken, so no brass sleeves were used. PID reading taken as sleeve was examined. Sample containers were prelabeled prior to filling. Blow counts were recorded by Mr. Kurt Schmierer. A 140-pound free-falling hammer was used to drive the split-spoon (fall of 30 inches). The split-spoon was delivered by Mr. Rob Hilton, of Ambler Exploration, to Mr. Schmierer. The sample was opened by Kurt Schmierer. The sampler was placed in an oil-free aluminum foil covered stainless-steel pan prior to opening. This sample was not selected for analysis.

Next spoon was driven 4.5 feet to 6 feet. Mr. Rob Hilton deconned his gloves between each split-spoon sampling event. This will be used to collect a TPH sample. No brass sleeves were used as no SW8260 samples were taken. The sample in the spoon was opened to take a PID reading. Sample recovery was recorded by Mr. Schmierer in the Log Book. TPH sample was placed into the cooler immediately after collection. No other analyses will be performed at this location. Lithologic characteristics were recorded in the log book by Mr. Schmierer. All sample information was recorded in the log book by Mr. Schmierer. Sample was taken directly above water table. No other sample will be collected at this location; however, this hole will be further drilled for lithographic purposes, then abandoned in accordance with the QAPP, and characterization/observation of a clay defining layer will be performed by Mr. Kurt Schmierer. Please see the attached Environmental Soil Sampling Systems Audit Checklist.

AWS:sp
AWS-098

cc: Carr, R.
Kassakhian, G.
Pacheco, S.

ENVIRONMENTAL SOIL SAMPLING
SYSTEMS AUDIT CHECKLIST

Contract: 7000 Date: July 12, 1994

Site: Kotzebue LRRS Auditor: Arlen Saxton

Yes	No	Comments	Operation
			PRESAMPLING OPERATIONS
___	___	Split-spoon	1. Sample type? (specify)
✓	___	Kurt Schmierer, Tt; Steve Moore, Ambler; Rob, Ambler	2. Qualified personnel?
✓	___		3. Adequate facilities, equipment, and supplies?
✓	___		4. Decontamination performed according to current procedure? (Soap, potable water, Type II, reagent grade water, methanol, hexane.)
✓	___		5. Sampling locations properly specified?
✓	___		6. Copy of task instructions or QAPP? Revision #Draft
✓	___		7. Copy of daily sampling schedule?
			SAMPLING OPERATIONS
✓	___		1. Samples collected at proper sampling locations?
✓	___		2. Appropriate sample technique used to obtain representative sample?
✓	___		3. Appropriate techniques used to ensure sample integrity and avoid contamination?

Yes	No	Comments	Operation
✓	____	____	4. At least 10% replicate/duplicate samples collected?
✓	____	____	5. Sufficient volume of sample collected?
✓	____	____	6. Suitable sample container used for storage?
✓	____	____	7. Sample containers properly labeled?
✓	____	____	8. OVA measurements taken and recorded prior to sampling and every 30 minutes during sampling?
			POST-SAMPLING OPERATIONS
✓	____	____	1. Decontamination performed according to current procedure? (Soap, potable water, Type II, reagent grade water, methanol, hexane.)
✓	____	____	2. Sampling date, time, and location properly recorded in logbook?
✓	____	____	3. Suitable sample shipping container label used?
✓	____	____	4. Chain-of-Custody form filled out?
✓	____	____	5. Chain-of-Custody seal affixed to sample container?
✓	____	____	6. Refrigerated sample storage?
✓	____	____	7. Overall recordkeeping procedure adequate?

Additional comments:

FIELD ACTIVITIES
RECORD KEEPING AUDIT CHECKLIST

Contract: 7000 Date: July 5, 1994

Site: Kotzebue LRRS Auditor: Arlen Saxton

Yes	No	Location of Record Comments	Record Keeping Requirement
			EQUIPMENT CALIBRATION
✓			1. FID or PID pre calibrated?
			post calibrated?
			Standards used 104 ppm Isobutylene/ 0 air
✓		4-7 pH	2. pH Meter pre calibrated?
✓		4-7 pH	post calibrated?
			Standards used 4-7 pH
			3. Conductivity Meter
✓			pre calibration check?
✓			post calibration check?
			Standards used 1,000 u/mhos
✓		100 ntu	4. Turbidimeter standardization check?
		N/A	5. CGI Meter pre calibration?
			post calibration?
			Standards used Methane 50% LEL
			FIELD RECORDS
✓			1. Name & Address of Field Contact on log book cover.
✓			2. Date of Entry
✓			a) Log Book
✓			b) FDS
			c) Others:
			Specify 1)
			2)
✓		Dave Hose, Tetra Tech Randy Dyer, Tetra Tech Steve Moore, A.E. Rob Hilton, A.E.	3. Names and affiliations of personnel on site.

Yes	No	Location of Record Comments	Record Keeping Requirement
✓			4. Description of Field Activities.
✓			5. Weather conditions.
✓			6. Location of activity.
✓			7. Observations of activities environment.
✓			8. Identification of Sampling Device.
✓			9. Any field measurements taken.
✓		8081 at 0.5 ft.	10. Sequence of sample collection.
✓			11. Type of Sample Matrix.
✓			12. Date and Time of sample collection.
✓			13. Field sample I.D.#.
✓		on COC	14. Sample distribution.
✓			15. Samplers name.
✓			16. Sample type (replicate, QA/QC, etc.)
		N/A	17. For Groundwater:
			a) Were samples filtered?
			b) Screen type & Size noted?
			c) Preservatives used noted?

<A:\ADMIN\HAZ\FCRKAC.SAM> 08/04/94, 2:48pm

Yes	No	Location of Record Comments	Record Keeping Requirement
✓			18. Each page in log book signed or initialled?
✓			19. Are corrections correctly lined out and initialled?
✓			20. If information is not in log book, It is referenced to another log book?
			PHOTOGRAPHS
✓			1. Roll and Frame number recorded.
✓			2. Time and date recorded.
✓			3. Photographer noted.
✓			4. Location of photograph noted.
✓			5. Subject of photograph noted.
✓			6. Significant or relevant features noted.
		N/A	7. Names of personnel in photograph, if any.

Additional comments:

ENVIRONMENTAL WATER SAMPLING
SYSTEMS AUDIT CHECKLIST

Contract: 7000 Date: July 10, 1994

Site: Kotzebue LRRS Auditor: Arlen Saxton

Yes	No	Comments	Operation
			PRESAMPLING OPERATIONS
✓		Name 1. Dave Hose 2. Curtis DeGasprie	1. Qualified personnel?
		Surface water	2. Sample type? (specify)
✓			3. Adequate facilities, equipment, and supplies?
✓			4. Sampling locations properly specified?
✓			5. Copy of task instructions or QAPP? Revision Draft
✓			6. Copy of daily sampling schedule?
			SAMPLING OPERATIONS
		Surface water	1. Least expected contaminated well sampled first?
✓			2. Samples collected at proper sampling locations?
		N/A	3. Breathing Zone and Well Bore monitored with a FID or PID meter respectively?
✓			4. Rinse probe with DI H_20 prior to placement?

Yes	No	Comments	Operation
___	___	N/A	5. Static water level measured prior to purging?
___	___	N/A	6. Each well volume measured for temperature, specific conductance and pH?
___	___	Well # N/A Gallons purged ___	7. Purge appropriate volume prior to sampling.
✓	___	Wheaton Sampler used	8. Appropriate sample technique used to obtain representative sample?
✓	___	___	9. Appropriate techniques used to ensure sample integrity and avoid contamination?
___	___	N/A	10. All purging and sampling equipment decontaminated prior to purging or sampling (between each well)?
___	___	N/A	11. Purged water measured and recorded?
✓	___	All metals and AK102 sample preserved by Tetra Tech field crew	12. pH of preserved samples (excluding VOC samples) verified by pouring small amount of sample on to pH paper?
✓	___		13. Are VOC samples collected first? and check for air bubles?
✓	___	___	14. At least 10% duplicate samples collected?
✓	___	___	15. Sufficient volume of sample collected?
✓	___	___	16. Suitable sample container used for storage?
✓	___	___	17. Sample bottles properly labeled?
✓	___	___	18. Sampling data sheet completed in a timely manner? (Within five minutes of activity.)

Yes	No	Comments	Operation
___	___	N/A	19. OVA measurements taken and recorded prior to sampling and every 30 minutes during sampling?
			POST-SAMPLING OPERATIONS
✓	___		1. Decontamination performed according to current procedure? (Soap, potable water, Type II, reagent grade water, methanol, hexane.)
___	___	N/A	2. Well capped immediately following removal of pump and prior to decontamination?
✓	___		3. Sampling date, time, and location properly recorded in logbook?
✓	___		4. Suitable sample shipping container label used?
✓	___		5. Chain-of-Custody form filled out?
✓	___		6. Chain-of-Custody seal affixed to sample container?
✓	___		7. Refrigerated sample storage?
✓	___		8. Overall recordkeeping procedure adequate?

Additional comments:

ENVIRONMENTAL SOIL SAMPLING
SYSTEMS AUDIT CHECKLIST

Contract: 7000 Date: July 5, 1994

Site: Kotzebue LRRS Auditor: Arlen Saxton

Yes	No	Comments	Operation
			PRESAMPLING OPERATIONS
✓		Soil Shelby Tubes	1. Sample type? (specify)
✓			2. Qualified personnel?
✓			3. Adequate facilities, equipment, and supplies?
✓			4. Decontamination performed according to current procedure? (Soap, potable water, Type II, reagent grade water, methanol, hexane.)
✓			5. Sampling locations properly specified?
✓			6. Copy of task instructions or QAPP? Revision #Draft
✓			7. Copy of daily sampling schedule?
			SAMPLING OPERATIONS
✓			1. Samples collected at proper sampling locations?
✓			2. Appropriate sample technique used to obtain representative sample?
✓			3. Appropriate techniques used to ensure sample integrity and avoid contamination?
		N/A Geophysical samples only	4. At least 10% replicate/duplicate samples collected?
✓			5. Sufficient volume of sample collected?

Yes	No	Comments	Operation
✓			6. Suitable sample container used for storage?
✓			7. Sample containers properly labeled?
✓		Micro Tip 2000	8. OVA measurements taken and recorded prior to sampling and every 30 minutes during sampling?
			POST-SAMPLING OPERATIONS
✓			1. Decontamination performed according to current procedure? (Soap, potable water, Type II, reagent grade water, methanol, hexane.)
✓			2. Sampling date, time, and location properly recorded in logbook?
✓			3. Suitable sample shipping container label used?
✓			4. Chain-of-Custody form filled out?
✓			5. Chain-of-Custody seal affixed to sample container?
✓			6. Refrigerated sample storage?
✓			7. Overall recordkeeping procedure adequate?

Additional comments:

Shelby tube samples taken for geophysical properties only.

SUBJECT: Field Audit of Hand-Auger Soil Sampling and Sediment Sampling at Site 2212, spills 2 and 3.

DATE: 5 July 1994 **TIME:** 0900

CREW: Dave Hose, Randy Dyer

OBSERVATIONS:

All equipment was calibrated by Mr. Randy Dyer prior to sampling at the garage (storage) area. All sampling equipment was deconned prior to use. Procedures used followed manufacturer's guidelines and requirements in the FSP and QAPP. Samples were taken at Site SS12, spills 2 and 3. All sample locations were properly flagged by Mr. Dave Hose prior to sampling event. All samples were stored in a cooler with ice during continuing sampling. FSP was on hand during sampling. All analytes were double checked prior to moving to next site.

Perma frost was at a shallow depth, less than 6 inches. Many samples required multiple boreholes. Samples were collected using a hand auger. A hand-operated core sampler with a 6-inch brass sleeve was attempted; however, it proved impractical, and an undisturbed sample was unobtainable. A hand auger was used instead. The samples were collected in the following order: SW8081, SW8270, SW6010, and SW7421. A new auger was filled to collect the SW8260 sample immediately above the water line.

CONCLUSIONS AND RECOMMENDATIONS:

The soil sample for SW8260 originally were to be collected in a 6-inch brass sleeve. However, this proved not possible. A 1 1/2-oz. glass VOA soil bottle was used. Care was taken to disturb the sample as little possible. However, some disturbance of the samples did occur; this was unavoidable. The soil sampling using a hand auger produced acceptable samples. The SW8260 soil sample from the hand auger has the possibility of reading low in any analytical results due to the limited disturbance of the samples.

ENVIRONMENTAL SOIL SAMPLING
SYSTEMS AUDIT CHECKLIST

Contract: 7000 Date: July 5, 1994

Site: Kotzebue LRRS Auditor: Arlen Saxton

Yes	No	Comments	Operation
			PRESAMPLING OPERATIONS
✓		Hand-Auger Soil Sample	1. Sample type? (specify)
✓			2. Qualified personnel?
✓			3. Adequate facilities, equipment, and supplies?
✓			4. Decontamination performed according to current procedure? (Soap, potable water, Type II, reagent grade water, methanol, hexane.)
✓			5. Sampling locations properly specified?
✓			6. Copy of task instructions or QAPP? Revision #Draft
✓		Located in the FSP	7. Copy of daily sampling schedule?
			SAMPLING OPERATIONS
✓		Designated in the FSP	1. Samples collected at proper sampling locations?
✓		* See note about 8260	2. Appropriate sample technique used to obtain representative sample?
✓		*	3. Appropriate techniques used to ensure sample integrity and avoid contamination?
✓			4. At least 10% replicate/duplicate samples collected?
✓			5. Sufficient volume of sample collected?

Yes	No	Comments	Operation
✓			6. Suitable sample container used for storage?
✓			7. Sample containers properly labeled?
	✓	Sampling event takes approximately 20 minutes. PID measurements taken after and during hand augering and recorded on the FDS.	8. OVA measurements taken and recorded prior to sampling and every 30 minutes during sampling?
			POST-SAMPLING OPERATIONS
✓			1. Decontamination performed according to current procedure? (Soap, potable water, Type II, reagent grade water, methanol, hexane.)
✓		See Record Keeping Audit	2. Sampling date, time, and location properly recorded in logbook?
✓			3. Suitable sample shipping container label used?
✓			4. Chain-of-Custody form filled out?
✓			5. Chain-of-Custody seal affixed to sample container?
✓			6. Refrigerated sample storage?
✓			7. Overall recordkeeping procedure adequate?

Additional comments:

* SW8260 samples collected using a hand auger. Limited disturbance of the sample will have occurred. Refer to the Conclusions section of this audit.

SUBJECT: Audit of Well Installation Activities at SS02 - MW2 Waste Accumulation Area #2/Landfill Area

DATE: 8 July 1994 **TIME:** 1300

CREW: Kurt Schmierer, Tetra Tech; Steve Moore, Ambler Exploration; Rob Hilton, Ambler Exploration

OBSERVATIONS:

All well construction materials were stored in manufactured boxes and in plastic sleeves. 0.01-inch slot size was used for this beach well. 20-40 sand was used as an artificial filter rack. Kurt is a registered geologist supervising the site. 4.25-inch hollow-stem auger, using standard drill and drive techniques were used. Screen and casing sections used have flush threaded "O" ring sealed joints. Potable water was used to break any bridges in the same pack. A variance was obtained to allow a minimum of 6 inches filter sand above the well casing. Well was surged to settle the sand. Variance was obtained to not use a tremie pipe due to shallow well depth. Filter pack dropped 3 inches after surging was produced. Bentonite chips were added and hydrated to form a seal. After Bentonite seal was hydrated, well was opened and surged to remove well construction sediments, prior to well head completion. Well as bailed dry.

The well was hard to construct due to very fine sand layer at the bottom of the well. Well casing was pushed down 2 inches through the fines to set well. Sand and Bentonite were poured from the top, due to shallow depth. A variance was obtained.

SUBJECT: Audit of Well Development Activities at ST05 - MW2, Beach Tank Area

DATE: 8 July 1994 **TIME:** 1000

CREW: Rick Osgood, Curtis DeGasperi

OBSERVATIONS:

PID taken when well was opened. Water level was taken and the total depth taken prior to surging. After bailing and purging 20 gallons, the first set of readings were taken. Readings were taken after every 5 gallons purged. Temperature, pH, specific conductance within specified parameters after four readings were taken. Turbidity unable to achieve less than 5 ntu. Section 3.1.4 of the FSP, pg. 48, allows that after 25 volumes, development may end. Well volume = .6 gal. - 30 gal. purged; final readings = pH 6.89; conductivity = 413 u/mho; temp. = 30°C; turbidity = 90 ntu; water level = 7.13; well depth = 11.54; final well volume = .16 gal. per foot, 2-inch well ID. All readings were stabilized, except turbidity.

CONCLUSIONS AND RECOMMENDATIONS:

As per the QAPP, the well is considered developed. Mr. Rick Osgood will, however, perform adequate purging, wastewater container volume permitting, prior to sampling to achieve an acceptable turbidity reading. Due to the logistical problems, unlimited purging is not possible to achieve ideal well development readings.

APPENDIX H – ON-SITE LABORATORY AUDIT REPORT

ON-SITE EVALUATION REPORT

ANALYTICAL RESOURCES, INC.
SEATTLE, WASHINGTON

22-25 March 1994

Principal Evaluators:	Dr. Garabed H. Kassakhian
	Ms. Stephanie J. Pacheco
Tetra Tech Observer:	Mr. Roderick A. Carr

ON-SITE EVALUATION REPORT
ANALYTICAL RESOURCES, INC.
SEATTLE, WASHINGTON
22-25 March 1994

Principal Evaluators:	**Dr. Garabed H. Kassakhian**	**(909) 381-1674 x221**
	Ms. Stephanie J. Pacheco	**(909) 381-1674 x275**
Tetra Tech Observer:	**Mr. Roderick A. Carr**	**(202) 883-1912**

The evaluation of Analytical Resources, Inc. (ARI) consisted of the following:

- A preaudit visit to ARI by Mr. R. Carr and Dr. G. Kassakhian (11 January 1994).
- On-Site Evaluation of the laboratory (22-25 March 1994).
- Review of a preaudit package that ARI submitted to the Air Force Center for Environmental Excellence (AFCEE) and Tetra Tech, Inc.

The evaluation was primarily focused on the soil and water analytical methods that will be used in AFCEE's upcoming Kotzebue Long Range Radar Station (Kotzebue LRRS) project in Alaska. These methods are:

Parameters	Method (W = Water; S = Soil)
Total Petroleum Hydrocarbons	E418.1
Total Organic Carbon	SW9060 Modified
Total Petroleum Hydrocarbons	SW5030/AK101 Gasoline
	SW3550/AK102 Diesel
	SW5030/8015 LUFT Gasoline
	SW3550/8015 M LUFT Diesel
Lead	SW7421 Modified
Mercury	SW7470(W); SW7471(S)
Arsenic	SW7060 Modified
Selenium	SW7740 Modified
Metals	SW6010
Organochlorine Pesticides & PCBs	SW3510(W)/SW3550(S)/SW8081 (cap. column)
Volatile Organic Compounds	SW5030(S)/SW8260(S/W)
Semivolatile Organic Compounds	SW3550(S)/SW3520(W)/SW8270

PART II

PREAUDIT PACKAGE REVIEW FOR ANALYTICAL RESOURCES, INC.

Reviewer: **Michael Wilson, Chemist, Quality Assurance, Tetra Tech, Inc. (909) 381-1674**
Review Dates: 17-18 March 1994

The Preaudit Package provided by Analytical Resources, Inc. (Seattle, Washington) was reviewed for analytical compliance to good laboratory practice and SW-846 QA/QC criteria. The package for this review consisted of four sections as listed below.

- Section 1: Method Detection Limit Study Results
- Section 2: Surrogate Standard and Spike Acceptance Criteria
- Section 3: Instrument Calibration Curves
- Section 4: Performance Evaluation Results

SECTION 1

This section consisted of the raw data for the Method Detection Limit (MDL) Study and a summary of these results. The raw data for the MDL studies performed are in accordance with the 40 CFR, Part 136, Appendix B document in which the Environmental Protection Agency (EPA) has established the MDL study criteria. The MDL studies in this package consisted of the following list for both water and soil.

- Polynuclear Aromatics (PNA) by High Performance Liquid Chromatography Method 8310
- Semivolatile GC/MS Compounds which are not labeled as to the method associated with the study but assumed to be Method 8270
- Volatile GC/MS Compounds which are unlabeled but assume to be Method 8240.
- Volatile GC/MS Compounds by Method 524.2
- Pesticides by Method 8080
- Total Petroleum Hydrocarbons (TPH) by Method 418.1
- Gasoline by Method 8015M
- BTEX by Method 8020

<GHK:dmc HAZ\K67-2345, 18 May 1994>

The MDL studies were found to be acceptable except for the following deficiencies:

- MDL studies reported without the method designation information (Methods 8240 and 8270).
- Method 8240 MDL shows Bromoform to be quantitated under the wrong internal standard.
- Several instances where the units associated with results are not indicated.

The Method Detection Limit Study Results Summary contains a draft document of the laboratory's proposed definitions for Detection, Reporting, and Quantitation (Attachment A). There is much confusion resulting from the use of the "Reporting Detection Limit" and its relationship to the MDL as described in the draft document.

It appears that the "Reporting Detection Limit" is an artificial estimation of the MDL based on how the lab feels the true MDL should be and ***is not experimentally derived.*** **The rationale for the Reporting Detection Limit appears to be totally subjective and without any scientific evidence to support its existence and no justification for its use has been found in SW-846.** In light of these facts and in order to be consistent with good laboratory practice, the use of the method defined MDL and Practical Quantitation Limits (PQL) should be instituted.

SECTION 2

This section consisted of the control charts for Surrogates and Spike Compounds for the methods described. The data was generated from Laboratory Control Samples and Matrix Spike Samples. Both warning and control limits are displayed on the graph. The data appears to be in order.

SECTION 3

The Instrument Calibration Curves for the Inorganic Methods are the printouts from the indicated instruments computer software which has been developed for this purpose. The data appears to be in order.

SECTION 4

The Performance Evaluation Results for the last three years Performance Tests are listed. The results indicated the Laboratory had passed with 96% correct. The incorrect results are listed in Attachment B.

PART I

ON-SITE EVALUATION REPORT
22-25 March 1994

Principal Evaluators:	**Dr. Garabed H. Kassakhian**	**(909) 381-1674 x221**
	Ms. Stephanie J. Pacheco	**(909) 381-1674 x275**
Tetra Tech Observer:	**Mr. Roderick A. Carr**	**(202) 883-1912**

Orientation Meeting
Analytical Resources Inc.
333 Ninth Avenue North
Seattle, Washington 98109-5187
23 March 1994
3:30 p.m.

Analytical Resources, Inc.

Ms. Michelle Turner
Mr. John Hicks
Ms. M. Suzanne Kitch

Tetra Tech, Inc.

Mr. Roderick Carr (Redmond, Washington)
Ms. Stephanie J. Pacheco (San Bernardino, California)
Dr. Garabed H. Kassakhian (San Bernardino, California)

1. Sample Receiving and Management

Interviewed Analysts: Ms.Terrie Hedger (Supervisor), Mr. Chris Syberg

In general the sample receiving/management process is satisfactory and is documented in a Standard Operating Procedure (SOP).

- Upon receipt, coolers are verified to be clean, and are opened in the fume hood.
- All incoming samples are routinely monitored for radioactivity (if known mixed waste, then the monitoring is done before opening the cooler).
- The temperature of the available temperature blank or the cooler is measured using an NIST traceable mercury thermometer (0°-55°C $\pm$ 0.5°C). The SOP indicates that the acceptance temperature range is 4$\pm$2°C.

<GHK:dmc HAZ\K67-2345, 18 May 1994>

- A follow-up of a real-life anomaly report(action taken by the project manager upon consultation with the Client) and the report itself were not produced, but were mailed in later.

- Within 15 minutes after taking the samples out of the cooler, the sample receiver checks them against the information on the Chain-of-Custody (COC) and for anomalies.

- The pH of non-volatiles samples is checked and adjusted.

- The samples are logged into the Laboratory Information Management System (LIMS) and assigned individual identification numbers (ID). The printed labels indicate the matrix, whether to do MS/MSD, etc. ***The sample labels do not contain the actual storage location in the individual refrigerator.*** In each refrigerator the samples are stored in bins.

- The LIMS is backed up every evening.

- The sample storage refrigerators all have mercury thermometers immersed in glycerin. The temperatures are checked by laboratory's individual employees.

- Suspected highly contaminated samples are flagged with neon-orange stickers ***but are not segregated or stored separately.***

The following deficiencies were noted:

- ***Sample custody/transfer is inadequately documented.***

- ***Labels do not contain the (bin) location in the refrigerator.***

- ***The refrigerators are checked only on work-days. There is no remote alarm system to alert when the electricity has been turned off. Over a long weekend, up to 4 days may go by without anyone being aware of this.***

- ***On the task sheet the expiration of holding times are not clearly spelled out for different tests. Each manager tracks the sample holding times; there are no flags to alert sample tracking.***

2. *Inorganic Analyses*

2.1 Inorganic Sample Extraction Laboratory

Interviewed Analyst: Mr. J. Nelson

2.1.1. Standard Comparability and Storage

- The working standard was traceable to the logbook. The standard bottle label carried the expiration date, but not the logbook
- The neat standard had a valid expiration date on the label and was traceable to the neat standard login book.
- All standards observed were traceable to an NIST source.
- Second source standard was from the same vendor as the primary source (Inorganic Ventures). ARI also uses another second source standard (SPEX) to cross-check on a weekly basis.

2.1.2. Calibration and Quantification

- Automatic pipettes (Ranin) used for spiking are checked on a quarterly basis. Reagents are dispensed in graduated cylinders.
- Top loading scales used to weigh out dry reagents are calibrated on a daily basis. The calibration log book was reviewed.
- The refrigerator used to store soil samples is not monitored on Saturday or Sunday. Currently, the refrigerator is monitored every working day and the criteria for acceptance is $4° \pm 2°C$.

2.1.3. Standard Operating Procedures

- ARI has a very nice Standard Operating Procedure on how to calibrate pipettes. Pipettes are recalibrated on a monthly basis.

The following deficiencies were noted:

- ***No Standard Operating Procedure for how spikes will be performed or amounts to be added to what specific sample. All that exists is a loose leaf notebook paper with some notes and a strong reliance on that the label on the working spike solution bottle is correct.***
- ***Standard Operating Procedure for inorganic sample preparation was present but not finalized nor reviewed by Quality Assurance.***

2.2. Inductively Coupled Argon Plasma, Atomic Absorption Spectroscopy.

Interviewed Analysts: Ms. Christine Gebel (ICP) and Ms. Alice Abolins (AA-Se and As) plus Mr. Jim Fick (Supervisor).

2.2.1. Comparability of Data

- The primary and secondary standards used by ARI are from the same vendor (Inorganic Venture) but an additional standard is purchased from a different vendor (SPEX) to cross check the Inorganic Venture standards.

2.2.2. Calibration and Quantification

- Initial Calibration is performed at the correct frequency and concentration. A single calibration point is performed in five groups to prevent spectral interference.
- Calibrations are verified at the appropriate frequency using a second source standard. The SPEX standards to cross check the Inorganic Venture standards are used in the calibration or continuing calibration verifications (CCVs).
- Method specific calibration criteria is used for ICP and AA (Se/As) analytical runs.
- The analysts response to an out-of-control calibrations are consistent with the method requirements. If the acceptance criteria are not met, the single calibration is repeated. If this fails, the analyst performs a new initial calibration.
- Daily calibration curves are evaluated for linearity for both AA and ICP methods. The criteria for acceptance is based on a linear correlation coefficient, or r, of 0.995.

2.2.3. Standard Storage, Comparability and Records

- Working standards used for ICP and AA reviewed in the Inorganic Extraction Laboratory were labeled correctly and could be related to the Working Standards Logbook.
- Working standard bottles were labeled with the expiration date and concentration of the standard.
- No expired inorganic standards were observed.
- The working standard logbook clearly identified the steps used to prepare standard solutions.

The following deficiences were noted:

- ***Instrument calibration records observed indicated that standards observed in sample preparation as traceable were being used but the unique identifier for that standard that would relate it back to the working standard logbook was not present.***

- ***The working standard preparation and neat standard logbook did not have the expiration dates noted, although the neat and working standard bottles had labels with an expiration date clearly identified.***

2.2.4. Quality Control Execution

- ARI does use method blanks, laboratory control samples for ICP and AA runs to determine the accuracy and precision of analytical batches.

- ARI also uses matrix spikes and duplicate samples to monitor the effects of sample matrix on the analysis. ***The supervisor and analysts were made aware of US Air Force Center for Environmental Excellence (AFCEE) requirements for matrix spike/matrix spike duplicates.***

- All instrument detection limit values that exceed the Handbook MQLs have been noted in the Quality Assurance Project Plan.

- All instrument detection limits are updated on an annual basis.

- ARI will rely on SW-846 acceptance criteria for quality control samples to be used interim limits for analytical control until enough USAF environmental samples are analyzed. At that time, the control limits will be updated.

The following deficiency was noted:

- ***ARI has a very confusing definition of reporting limits, practical quantitation limit and method/instrument detection limit. As a result, it was unclear whether they had statistically derived in-house limits for ICP and AA analyses. This must be determined prior to the first environmental sample being sent to them.***

2.2.5. Out-of-Control Events

The following deficiency was noted:

- ***The analysts interviewed were very aware of what constitutes an out-of-control event but it was not clear that the laboratory has clear instructions for how the analysts should initiate a corrective action.***

2.2.6. Standard Operating Procedures

- SOPs were available for all methods but in draft form only.

- The SOPs for AA and ICP analyses did indicate the appropriate corrective action for common out of control situations.

- The SOPs for AA analyses are method specific and appeared to be compliant with method requirements. The SOPs are initially broken out by the specific equipment and then by method.

- The SOPs reviewed identified all relevant quality control acceptance criteria and listed the corrective actions for common out of control events.

- The SOPs reviewed did reflect the actual procedures used by the laboratory but were not cohesive and had not been finalized.

The following deficiency was noted:

- ***The SOPs reviewed did not have direction for spiking procedures. ARI relies on analyst knowledge for how spiking samples should occur at what concentration.***

2.2.7. Analytical Run Logbooks

- Calibration records are not regularly reviewed during the run but the results are reviewed by the section supervisor.

- Each instrument was uniquely identified in the related run log. Each piece of equipment had its own run log.

The following deficiency was noted:

- ***Each instrument run log contained terminated or invalidated runs; although the reasons why the runs were terminated are not clearly identified in the run log. Nor does it discuss how the system was brought back into compliance, when the run termination was the a result of a nonconformance.***

2.2.8. Corrective Action Reports

- The inorganic section routinely completes Corrective Action Reports. At the time of the audit, an ICP run with a failed LCS was reviewed and a Corrective Action Report was generated.

- The Corrective Action Report used by ARI provides a location to document how control was reestablished for the affected parameters.

2.2.9. Maintenance Logs

- All the major instruments associated with the Inorganic Section had a specific maintenance log book. Care must be taken that each log book has the specific identity of the machine noted.

- Entries in the maintenance logs included the date, signature and description of the problem encountered.

The following deficiency was noted:

- ***The maintenance logs do not detail the diagnosis of the problem nor the verification measures used to demonstrate a return to normal operations. The analysts rely on the Corrective Action Log to note corrective action and return to control due to instrumentation.***

2.3. Cold Vapor Atomic Absorption for Mercury

2.3.1. Comparability of Data

- The mercury standard was NIST traceable.

2.3.2. Calibration and Quantification

- The correct five point calibration for CVAA Hg analysis is performed by ARI.

2.3.3. Standard Storage, Comparability and Records

The following deficiency was noted:

- ***The working mercury standards used were expired. Intermediate standards are made on a daily basis in unlabeled volumetric flasks.***

2.3.4. Quality Control Execution

- ARI does use method blanks, laboratory control samples for CVAA Hg analysis to determine the accuracy and precision of analytical batches.

- ARI also uses matrix spikes and duplicate samples to monitor the effects of sample matrix on the analysis. The supervisor and Hg analyst were made aware of AFCEE requirements for matrix spike/matrix spike duplicates.

2.3.5. Out of Control Events

- The analyst was aware of what constituted an out of control event.

2.3.6. Standard Operating Procedures

The following deficiency was noted:

- ***The SOP had not been finalized.***

2.3.7. Analytical Run Logbooks

The following deficiency was noted:

- ***The analytical run log does not include details of the five point calibration curve that is performed on a daily basis. Only review of the raw data demonstrated the presence of five point calibration.***

2.3.8. Corrective Action Reports

- Corrective actions are detailed on Corrective Action Report forms for review by the supervisor.

2.3.9. Maintenance Logs

- Preventative maintenance log was present for Buck Mercury Analyzer detailing minor repairs to machine. Documentation for the return to control of this system was not present.

2.4. Total Organic Carbon, SW 9060 Modified

2.4.1. Comparability of Data

- Did not review whether the standards used were NIST or EPA traceable.

2.4.2. Calibration and Quantification

- Calibration is being performed at the correct frequency and concentrations.

2.4.3. Standard Storage, Comparability and Records

- The stock solution used for soil analysis and the diluted stock solution used for water analysis were all traceable to the working standard log book.

- Standard labels had concentrations and expiration dates noted.

2.4.4. Quality Control Execution

- A method blank, and laboratory control samples are incorporated in the analytical run for Total Organic Carbon determination.

- To monitor the effects of sample matrix on the analysis matrix spikes and matrix spike duplicate samples are used in the Total Organic Carbon analytical run at the proper frequency.

2.4.5. Out-of-Control Events

- Analysts rely on personal knowledge rather than on any written instructions to dictate further action.

2.4.6. Standard Operating Procedures

The following deficiency was noted:

- ***An SOP for Total Organic Carbon was present but not in a final form.***

2.4.7. Analytical Run Logbooks

The following deficiency was noted:

- ***A bound run log is not used for the determination of Total Organic Carbon. Instead, a loose bench sheet is used. The analyst should use a bound log book.***

2.4.8. Corrective Action Reports

- The analysts was aware of what constitutes an out-of-control event and that these events must be detailed on a Corrective Action Report.

2.4.9. Maintenance Logs

- Preventative maintenance documentation is very good. All instrument parameters and settings are present. The analyst has taken it upon herself to detail how the machine was brought back into control after maintenance is performed.

2.5. Fe^{+2}/Fe^{+3}

2.5.1. Calibration and Quantification

- Calibration includes a seven point curve.

2.5.2. Quality Control Execution

- A method blank, and laboratory control samples are incorporated in the analytical run for Ferrous and Ferric Iron determination

- To monitor the effects of sample matrix on the analysis matrix spikes and duplicate samples are used in the Ferrous and Ferric Iron analytical run at the proper frequency.

2.5.3. Standard Operating Procedures

- Acceptance criteria ($r^2=0.99$) for calibration were identified in the SOP.

- The SOP for Ferrous and Ferric Iron determination was in a finalized form.

3. Organic Analyses

3.1. Organic Extractions

Interviewed Analyst: Tarry Hawk-Thomas (Supervisor)

- The SOP is in revision, expected completion date is April 1994.
- Spike witnesses have been operative since August 1993; no double or triple spiking has been observed since.
- The priorities are set up by the Supervisor who also tracks the holding times.
- The GPC SOP is currently being revised. The EPA CLP Statement of Work (SOW) is the basis of the work.

The following deficiencies were noted:

- ***The current(old) SOP does not contain the surrogate and spiking techniques, instructions for taking samples out of and returning them to the walk-in refrigerator.***
- ***No expiration dates are posted on the spikes or surrogates.*** **It is assumed that they expire one year from the preparation date.**
- Separate syringes are used for spiking and surrogate delivery. ***They are not labelled as such, nor are the identical boxes into which they are stored/returned.***
- **The GPC is located in the same laboratory as the organic extractions operation, with no fume hood, or ventilation/exhaust system of its own. Although ARI seems not to have experienced methylene chloride contamination (usually in the range of less than 2 parts per billion)** ***the GPC must be removed from the organic extraction room. It requires a separate, dedicated hood and ventilation. It must have a separate room with negative pressure (air flow into the room) and an exhaust to the outside.***

3.2. Balances

- No inadequacies noted, except for the absence of corrective action documentation for out-of-control events.

3.3. Gas Chromatography (Methods SW 8020 and SW8015/Gasoline)

Interviewed Analysts: Mark Raffier, Peter Kepler (Supervisor)

3.3.1 Calibration and Quantitation

- Method-specified calibration criteria are used for each method.

- The methods have not been out of control for over a year.
- The daily calibration curves are evaluated for linearity following EPA Methods.
- The working standards, which are prepared daily at 25 ug/L, were labeled with the correct concentrations and agree with the information in the standards logbook.
- Expired standards are neither used nor revalidated.

The following deficiencies were noted:

- **For SW 8020 benzene, toluene, ethylbenzene, and xylenes (BTEX) the initial calibrations performed at the method-specified number of concentration levels are a *confusing hybrid of the old(5, 25, 50, 100, 125) and draft(1, 10,25, 50, 100) SOPs.***
- **For SW8015 Gasoline the calibrations are verified at the appropriate frequencies using second source standards from an independent supplier, i.e. Accustandard and Macroscientific. *No Accustandard certificates were available at the time of the audit. SW8020 uses a non-traceable Accustandard standard without a 2nd source standard for confirmation.***
- ***The 8015 gasoline and 8020 standards do not carry expiration dates or concentrations.***
- ***Inadequate sample control once the sample is extracted and put in the refrigerator. No one signs out the samples from the refrigerator, and the only way of tracking who worked with the sample is from the working log books.***
- ***The SW8020 Practical Quantitation Limits (PQLs) for soil are higher than the SW8260 limits, i.e. the Reporting Detection Limits (RDLs) excel the Installation Restoration Program (IRP) Handbook Maximum Quantitation Limits (MQLs). According to ARI this is caused by conducting methanol extraction rather than a direct sparge as required by SW846.***

  It is the recommendation of these auditors that ARI's Method SW8020 not be used for the Kotzebue LRRS project.

3.3.2. Quality Control Execution

- The laboratory uses method blanks, laboratory control samples (LCSs) to determine the accuracy and precision of the analytical batches at the rate of one per batch or for every 20 samples.
- The matrix spikes and the LCSs contain all the target analytes.
- Samples with outlying surrogate recoveries are reanalyzed.
- The Method Detection Limits (MDLs) are updated annually.

- The experimentally determined quantitation limits are reported in the data packages.

- Quality Control (QC) acceptance limits are available for method SW8020.

The following deficiencies were noted:

- ***Control limits for 8015 gasoline were not available at the time of the audit.***

3.3.3. Out-of-Control Events

- The analyst initiates corrective action by informing the supervisor and after its completion by recording the corrective action in the run log book.

The following deficiencies were noted:

- ***Return to control after routine or non-routine maintenance is not documented.***

3.3.4 Standard Operating Procedure

The following deficiencies were noted:

- ***The laboratory is using outdated SOPs which contain crossed out sections, with no authorized change date or initials of the ARI staff member making or authorizing these changes. These SOPs do not discuss appropriate corrective action for common out-of-control situations.***

- ***The surrogate acceptance limits are NOT included in the old nor in the draft SOPs.***

3.3.5. Quality Assurance

The following deficiencies were noted:

- ***The Quality Assurance Officer does not conduct audits of the organic Gas Chromatography (GC) section. An audit report should include the average workload of the GC section, the number of analytical violations and a summary of corrective action requests issued.***

3.4 Gas Chromatography (Methods SW8081/Organochlorine Pesticides and Polychlorinated Biphenyls and SW8015 Modified (LUFT)/Diesel)

Intserviewed Analyst: Mr. Mark Wolfe

3.4.1 Calibration and Quantification

- Initial calibrations are performed at the method-specified number of concentrations.

- Daily calibration curves are evaluated for linearity for EPA Method 8081 and 8015 Modified, Diesel

- GC calibration records provide evidence of the proper frequency of calibration, the use of traceable standard, calibration checks, and appropriate response to out of control calibrations.

The following deficilencies were noted:

- ***Calibrations are not verified at the appropriate frequencies using second source standards. The standards are verified at the time they are made rather than during the analytical run. The second source material is from the same vendor as the primary source.***

- ***Method specific criteria are not being used for EPA Method 8081. ARI uses modifications to the calibration requirements that have been approved by the State of Washington. Currently, the analyst quantitates against the continuing calibration point rather than the initial calibration curve.***

- ***GC calibration records are not being reviewed by either the supervisor of the section nor by Quality Assurance.***

3.4.2 Standard Storage, Comparability and Records

- Working standards are labeled with the concentration but it is unknown whether this information is related to the working standards log book.

- Standard labels have expiration dates for the standard.

- Expired standards are not revalidated by ARI.

- The neat standard log book detailed all the steps used to prepare the working standards.

The following deficiencies were noted:

- ***Current standards are stored in the same location as expired standards. A recommendation was made at the time of the audit that expired standards be placed in a separate location.***

- Purchased standard solutions are uniquely identified in the preparation logbook ***but expiration dates of standards are not located in the logbook; only on the label of the standard.***

- ***Working standards located in Refrigerator #17 were inconsistently labeled with respect to the preparation log book.***

3.4.3 Quality Control Execution

- ARI does use method blanks, laboratory control samples for EPA Method 8081 and 8015 Modified runs to determine the accuracy and precision of analytical batches.
- ARI also uses matrix spikes and matrix spike duplicate samples to monitor the effects of sample matrix on the analysis.
- All instrument detection limit values that exceed the Handbook MQLs have been noted in the draft Quality Assurance Project Plan.
- All instrument detection limits are updated on an annual basis.
- ARI will rely on SW-846 acceptance criteria for quality control samples to be used interim limits for analytical control until enough USAF environmental samples are analyzed. At that time, the control limits will be updated.
- No control charts were reviewed for EPA Method 8081 or 8015 Modified analytes.
- The laboratory will use method specific default limits until enough data is generated to provide in-house limits.

The following deficiencies were noted:

- ***ARI has a very confusing definition of reporting limits, practical quantitation limit and method/instrument detection limit. This discrepancy must be alleviated prior to the first environmental sample being sent to them.***
- ***Currently, for EPA Method 8081, the analyst quantitates any positive value against the continuing calibration point rather than the initial calibration curve. We would like to insist that all samples sent to ARI for analysis collected during the RI/FS work effort at Kotzebue LRRS be quantitated against the initial calibration as per SW-846.***
- ***At the time of our audit, ARI did not have an MDL study for soil and water for EPA Method 8081. This information must be acquired by the laboratory for all associated pesticides, all PCB isomers and Toxaphene prior to receipt of any US Air Force samples requesting this analysis.***
- ***Samples with outlying surrogates are not being reanalyzed. At the time of the audit, we requested that the samples with failed surrogate recovery be reanalyzed to confirm matrix interference.***

3.4.4 Out-of-Control Events

- The analysts interviewed were very aware of what constitutes an out-of-control event.
- To initiate a corrective action, the GC analyst will 1) discuss with the ARI project manager, and, 2) Fill out a Corrective Action Report as necessary.

3.4.5 Standard Operating Procedures

- The Standard Operating Procedure for EPA Method 8081 does provide necessary information about second column confirmations.

The following deficiencies were noted:

- ***Standard Operating Procedures were method-specific and were available at the bench for EPA Method 8081 and 8015 Modified but were not in a final form.***

- ***Standard Operating Procedure indicate in some locations the appropriate corrective action for out-of-control situations. This was not consistently present throughout the Standard Operating Procedure.***

- ***The Standard Operating Procedures do not provide sufficient guidance for corrective action for outlying surrogate recoveries. The analyst relies on the direction provided by the ARI Project Manager.***

- ***The Standard Operating Procedure do not identify the concentrations of the calibration verification standards. ARI relies on SW-846 Method 8000 for direction.***

- ***The Standard Operating Procedure does not provide instructions for how to spike samples with appropriate analytes and surrogates. ARI relies on SW-846 Method 8000 for direction.***

- ***The Standard Operating Procedures do list acceptance criteria but not corrective actions for common out-of-control events.***

- ***The Standard Operating Procedures do not reflect that the laboratory is currently analyzing EPA Method 8081 by the Contract Laboratory Program Statement of Work. No samples are being analyzed for EPA Method 8081 analytes by SW-846 protocol. This transition from CLP to SW-846 may be difficult for ARI to accomplish.***

3.4.6 Corrective Action Reports

- The inorganic section routinely completes Corrective Action Report.

- The Corrective Action Report used by ARI provides a location to document how control was reestablished for the impacted parameters.

3.4.7 Maintenance Logs

- All instruments associated with the GC section have their own maintenance logs but do not contain a maintenance schedule.

- Entries in the maintenance logs included the date, signature and description of the problem encountered.

The following deficiency was noted:

- ***The maintenance logs do not detail the diagnosis of the problem nor the verification measures used to demonstrate a return to normal operations. The analysts rely on the Corrective Action Log to note corrective action and return to control due to instrumentation.***

3.5 Gas Chromatography/Mass Spectroscopy (SW 8260 Volatile Organics)

Interviewed Analysts: Jean Alexander, Loren Cruse, John Anderson, Mark Raffier(trainee), Brian Bebee (Supervisor)

3.5.1 Calibration and Quantitation

- A2LA certified traceable internal standards are used (Ultrascientific).
- All internal standards and surrogates carry expiration dates.
- The laboratory control sample (LCS) uses a non-traceable EM Science source.
- The Ultra-Science calibration compounds are non-traceable. The expiration dates are on the vials, not the certificates.
- The daily calibration standard contain all the SW8260 analytes and naphthalene.

The following deficiencies were noted:

- ***All standards and check compounds must be traceable.***
- ***The response factor for method calibration compounds(SPCC/CCV) must be 20% as in SW846, not 25% as in CLP.***

3.5.2 Calibration and Standards Records

- The SW8260 GC/MS calibration records provide evidence of the proper frequency of calibration, the use of traceable standards, calibration checks and appropriate response to out-of-control calibrations.
- The calibration records are regularly reviewed and signed by the section supervisor.
- The calibration standards that are recorded in the logs are uniquely identified, and are traceable to the working standards logbook.
- The standard preparation logbook lists the expiration dates for the working and stock standard solutions, and the standards listed within them have been given unique identifiers.

- The preparation logbooks detail the steps used to prepare standard solutions from source materials.

- The bromoform response is good, the associated internal standard is chlorobenzene-d_5.

3.5.3 Out-of-Control Events

The following deficiency was noted:

- ***Return to control is not documented .***

3.5.4 Standard Operating Procedure

- The SOP describes all the analytical steps completely.

- The new SOP reflect the actual procedures used by the laboratory.

The following deficiencies were noted:

- ***The SOP does not conform to SW846. There are significant modifications that will trigger variance requests.***

- ***The laboratory does not have a mechanism to revise outdated SOPs. It is left to the discretion of the analyst. SOPs should be revised even when one procedural item is changed.***

3.5.5 Quality Control Execution

The following deviations and/or deficiencies were noted:

- ***Surrogates have been moved to different internal standards with no study to back-up claims, whether the changes are scientifically justified, e.g. a new surrogate, 1,2-dichlorobenzene-d4, has been added under 1,4-dichlorobenzene-d_4. 1,2-dichloroethane-d_4 is quantitated under pentafluorobenzene, rather than the 1,4-difluorobenzene specified by the method.***

- ***The initial calibration has a very wide range,i.e. from 1 to 200 parts per billion (ppb), versus the usual 10 to 200 ppb.***

- ***Uses a larger spiking list than required by the method.***

- ***Control limits are not available, and control charting has not been done. The control limits are based on historical data from non-8260 methods.The Kotzebue LRRS Quality Assurance Project Plan matrix spike/matrix spike duplicate (MS/MSD) limits are not valid.***

- ***The response factors must be thoroughly reviewed.***

3.5.6 Quality Assurance

The following deficiencies were noted:

- ***ARI's is not involved in the internal auditing of SW8260 operations.***
- ***Manual integrations are not documented adequately.***

3.6 Gas Chromatography/Mass Spectrometry (SW 8270 - Organic Semi-volatiles)

Interviewed Analysts: Elizabeth(Liz) Anderson (Supervisor); Charles McDonald, Van Spohn, Matthew Bates.

- **The analysts and their supervisor were unaware of the IRP Handbook, the Kotzebue project-specific Quality Assurance Project Plan, and the control limits for Laboratory Control Samples (LCS).**

3.6.1 Calibration and Quantitation

- The calibrations for all instruments are verified at the appropriate frequency with independent standards from a second supplier. Uses A2LA traceable UltraScientific as primary standard, while the 2nd source is a non-traceable Supelco standard.
- Daily calibration curves are evaluated for linearity.
- The working standards are labeled with the correct concentrations and they agree with the information in the standards logbook.
- The current standards are stored separately from the expired standards.
- The expired standards are revalidated periodically.

The following deviations from the method and/or deficiencies were noted:

- ***Initial calibration concentrations are different for different instruments,e.g.***

INCOS:	***5,10,25,50,80 ng/uL***
Finnigan 4500:	***5,10,25,40,60 ng/uL***
CLP requires	***10,25,40,60,80 ng/uL***

- ***CLP specified calibration criteria are used currently.***
- ***The Method Detection Limit (MDL) studies seem to be out of control on the high side.***
- ***The standards do not have expiration dates, only preparation dates.***

- ***Internal standards do not have their concentrations marked on their containers.***

- ***The neat standards, reportedly purchased years ago, do not have expiration dates.***

3.6.2 Quality Control Execution

- To determine the accuracy and precision of analytical batches ARI uses method blanks and LCSs at the frequency of one per extraction batch.

- The effect of sample matrix on the analysis is monitored through the use of matrix spikes and matrix spike duplicates.

- The MS and the LCS contain all the target analytes.

- Samples with outlying surrogates recoveries are reanalyzed, but these instructions were not part of the SOP in use at the time of this audit.

- The MDL studies are updated quarterly for the main analyses.

- Experimentally determined quantitation limits are reported in the data packages only upon the request of the Client.

- Acceptance limits for all QC parameters are available throughout the laboratory and are used to control the analytical batches.

- Every third batch of CLP magnetic tapes is sent to U.S. EPA's Mr. Larry Butler, EMSL, Las Vegas, Nevada.

The following deviations from the method and/or deficiencies were noted:

- ***There was no comparison available to indicate whether the laboratory determined control limits exceeded the method control limits.***

- ***The control limits are CLP method specified, not laboratory generated.***

3.6.3 Out-of-Control Events

- The analysts are aware of control limits. When one of each kind of surrogate fails or any single recovery is less than 10%, then these constitute out-of-control events, which are not discussed in the SOP in use at the time of the audit.

- The corrective action is initiated at the bench, and proceeds all the way to reextraction and reanalysis.

3.6.4 Standard Operating Procedure

- The SOP indicates that when one internal standard is not within limits, the sample must be reanalyzed.

- A "manual integration directive" was written by Liz Anderson, and is currently in draft. It deals with saturation issues, and permitted manual integrations.

The following deviations from the method and/or deficiencies were noted:

- ***The SOP does not correspond to actual practices, and contains handwritten notes all over the page, e.g. sample with outlying surrogate recoveries <u>are</u> reanalyzed.***

- ***The SOP is not clearly written.***

- ***The SOP should address the preparation of the standards, or a separate short SOP commissioned for this purpose.***

3.6.5 Analytical Records

- The instrument run logbooks, containing terminated and invalidated runs, and interrupted sequences do have entries explaining the reasons of such events, and the corrective actions taken.

- Each specific GC/MS instrument is identified in the run logbooks. Each instrument has its individual run logbook.

3.6.6 Quality Control Records

The following deficiencies were noted:

- ***Quality Assurance does not conduct audits of the semi-volatiles GC/MS.***

- ***Mr. Don Patton, Final Data Reviewer (FDR), reviews all manual data integrations. Quality Assurance is not included in this loop.***

3.6.7 Maintenance Logs

The following deficiencies were noted:

- ***Although all major instrument of the GC/MS section have maintenance logs, the pages are not numbered, and the logbooks are not attached to each instrument.***

- ***The maintenance logs do not describe the verification measures to demonstrate a return to normal operation following major service.***

- ***The log entries contain the date and description of the problem, but no signature of the analyst or the operator.***

3.7 Total Petroleum Hydrocarbons EPA Method 418.1

Interviewed Analyst: Mr. Matt Bates

3.7.1 Calibration and Quantification

- Calibration appears to be as specified by the method.

3.7.2 Standard Storage, Comparability and Records

The following deficiencies were noted:

- ***The surrogate used for EPA Method 418.1 did not have an expiration date on it. All standards must have a date of preparation and expiration on the label.***

- ***The standard #S0321945 could not be traced from the run log book to the working standard log book***

- ***There was no way to trace another standard (#254-38) to the working log book as the standard appeared to be mislabeled.***

All standards used in U.S. Air Force samples analyzed by this method must be related to the working standard log book, the neat preparation log book and, finally, the certificate of traceability.

3.7.3. Quality Control Execution

- Control charts for LCS, soil and water, were located near the FTIR instrument and were being actively used.

The following deficiency was noted:

- ***No corrective action was present for the value below the warning level nor for those values indicating a possible trend or bias. Control charts for this method must be reviewed by Quality Assurance for the detection of trends or bias.***

3.7.4 Out-of-Control Events

- The analyst interviewed was aware of what constitutes an out-of-control event and what steps should be taken to correct the problem.

The following deficiency was noted:

- ***Documentation of the out of control event was not clearly elucidated.***

3.7.5 Standard Operating Procedures

The following deficiency was noted:

- ***The Standard Operating Procedure for EPA Method 418.1 could not be located. As a result, no Standard Operating Procedure for this method was reviewed. A standard Operating Procedure for this method must be established by ARI prior to receipt of environmental samples from the RI/FS work effort at Kotzebue LRRS.***

3.7.6 Analytical Run Logbooks

- Run log indicated the proper frequency of quality control samples but the identity of the standard used was not detailed.

3.7.7 Maintenance Logs

The following deficiencies were noted;

- ***The preventative maintenance log book was not located with the FTIR instrument and could not be reviewed. This log book must be either located or a new one established.***

EPA Method 418.1 requires some attention to bring it to the level that other methods reviewed are at. As a result, it is Tetra Tech's opinion that ARI cannot currently analyze U.S. Air Force samples by this method. Tetra Tech recommends that no samples be sent to ARI for analysis by EPA Method 418.1 until the deficiencies identified during this audit have been corrected.

4. Data Packages

- One U.S. Corps of Engineers project package was reviewed, and found to be of acceptable quality.

The following recommendations were made:

- ***PACE type narrative required to cover section D & E of the CLP equivalent list (Table 9-1 of the QAPP.***
- ***The SW8270 surrogates were outside the control limits, but were not flagged in the reviewed U.S. Army Corps of Engineers package.***
- ***All the pages of an SDG should be consecutively numbered. The pages of the reviewed package were not numbered.***

<GHK:dmc HAZ\K67-2345. 18 May 1994>

5. Quality Assurance Project Plan for Kotzebue LRRS

The following recommendations were made:

- ***Use the SW method designations.***
- ***Try to get the preliminary data out.***
- ***Change the Reporting Limit and the Quantitation Limit to conform to the understanding of PQL and MDL.***
- ***Do not use low, high or other CLP terms.***
- ***Be consistent in the use of significant figures.***

6. Analyst Training

- Training files are being kept to document analyst performance on PE samples (as of 2/94).
- Training occurs as on-the-job training. No formal training using PE samples.
- A draft Standard Operating Procedure is in existence for how training occurs. A lead person/trainer instructs new staff members. The trainee would evaluate an LCS/method blank. The results would be filled. The trainee must be rated as "proficient" for 6 months prior to being elevated to trainer level.
- Performance Evaluation samples will be sent to a different analytical group every 6 months.

The following deficiency was noted:

- ***Documentation at this time is incomplete.***

7. Verification of Certification

- State Certification: Washington #C038
  Alaska Acceptance (via facsimile)
  California #1493
- Federal Certifications: Department of the Army, Environmental Hazardous Toxic and Radioactive Waste Division (USACE)

- Performance Evaluation Studies:
  - EPA Water Pollution WP.
  - EPA Water Supply WS.
  - EPA Region 10 TCL and Non-TCL for volatile organics, semivolatile organics, and organopesticides and PCBs.
  - Radiochemistry for DOE/EPA performed on a quarterly basis.
  - APG PE for fuels, gasoline, diesel, BTEX

Debriefing Meeting

Analytical Resources, Inc.
Seattle, Washington
25 March 1994

Analytical Resources Inc.	Telephone
John Hicks	(206) 621-6490
Jay Kuhn	
Brian N. Bebee	
Susan Dunnihoo	
Michelle Turner	
M. Suzanne Kitch	
Liz Anderson	

Tetra Tech, Inc.	
Roderick A. Carr (Redmond, WA)	(206) 883-1912
Stephanie J. Pacheco (San Bernardino, CA)	(909) 381-1674 x275
Garabed H. Kassakhian (San Bernardino, CA)	(909) 381-1674 x221

<GHK:dmc HAZ\K67-2345, 18 May 1994>

ATTACHMENT A

DRAFT DRAFT

Detection, Reporting and Quantitation

"Detection" defines whether an analyte is present or absent in a measured sample. "Quantitation" defines whether the determined value for the analyte present is a reliable number. Any value obtained for a sample must be evaluated against established criteria to determine its reliability. To ensure consistency throughout the laboratory, Analytical Resources, Inc. utilizes the following approaches for limit determination and reporting of final results.

DRAFT

Statistical Method Detection Limit

The Statistical Method Detection Limit (MDL) is a statistically derived value indicating the minimum analyte concentration in which there is a 99% confidence that the concentration is greater than zero. Method Detection Limit (MDL) studies are conducted for all parameters using water and sediment matrices. MDL studies are performed in accordance with 40 CFR, Part 136, Appendix B.

MDLs are determined by analyzing seven replicate samples spiked with analytes of interest at levels that are one to five times the estimated detection limit. It is essential that all processing steps for the method are included in the MDL determination. The MDL is calculated as the standard deviation of the replicates multiplied by the Student's t-test value for six (n-1) degrees of freedom.

For methods known to exhibit a greater degree of variability, eight or more replicate samples are processed with t-test multipliers adjusted accordingly.

Reporting Detection Limit

The Reporting Detection Limit (RL) is the lowest value at which qualititative identification of a given analyte is considered by the laboratory to be reliable. The RL is based on the MDL, method efficiency and analyte response. The RL will, at minimum, meet the MDL study result. RLs for analytes or methods known to have a greater degree of variability may exceed the statistical MDL.

DRAFT

Quantitation Limit

The Quantitation Limit (QL) is the level at which an analyte can be reliably quantified as well as detected. The QL defines the lower limit of the useful range of measurements. The QL is determined to be at least 3 times the statistical MDL (10X SD of MDL replicates) , depending upon the analyte and method. The QL will meet or exceed the RL. For analytes considered to be reliably quantifiable at the reporting level, RL and QL values will be the same.

Reporting Procedures

Analytes which may be identifiable at levels below the RL are considered to be unreliable and are not reported. Analytes present at levels above the RL but below the QL are reported and qualified as "estimated" due to the unreliability of quantitation at this level. Analytes present at levels above the QL are considered to be reliable values; these values are reported without qualification.

DRAFT DRAFT DRAFT

ATTACHMENT B

The results for WS032, WS031, WP030 and WP029 which were outside acceptance limits, are listed below. Limits in parentheses.

- WS032: Copper at 82.4 ug/L (738-902 ug/L)
- WS031: Boron at 823 ug/L (652-814 ug/L)
  Calcium at 254 ug/L (214-244 ug/L)
  Zinc at 197 ug/L (161-190 ug/L)
  Cyanide at 0.177 ug/L (0.202-0.337 ug/L)
  Vinyl Cl at 17.7 ug/L (7.14-16.7 ug/L)
  Anthracene at 0.043 ug/L (DL-DL)
- WP030 All within limits
- WP029 Calcium and Potassium failed high by 5%
  Both levels

TETRA TECH, INC.
348 West Hospitality Lane, Suite 300
San Bernardino, CA 92408-3216
Telephone (909) 381-1674
FAX (909) 889-1391

TRANSMITTAL

DATE: 18 May 1994

TO: Mr. Rod Carr
Tetra Tech, Inc.
15400 NE 90th Street, Suite 100
Redmond, WA 98052

CONTRACT: **9676**

Attached, please find a copy of letter no. GHK-K67-2345 to be signed by you and a hard copy of the ***On-site Evaluation Report, Analytical Resources, Inc., Seattle, WA, 22-25 March 1994***.

For your convenience, I have enclosed a disk containing this document, should there be any last minute changes you feel necessary.

Please do not hesitate to contact the undersigned at (909) 381-1674 if there are any questions.

Best regards. Thank you.

COPIES TO:

By: Dr. Garabed H. Kassakhian

Approval: _____

SHIPPING METHOD: ☐ **First Class** ☐ **UPS (Overnight/Ground)** ☒ **Fed Ex** ☐ **Hand Delivery**

LABORATORY RESPONSE
TO ON-SITE AUDIT REPORT

ANALYTICAL RESOURCES INCORPORATED

Analytical
Chemists &
Consultants

333 Ninth Ave. North
Seattle, WA 98109-5187
(206) 621-6490
(206) 621-7523 (FAX)

3 June 1994

Roderick A. Carr
Tetra Tech, Inc.
15400 NE 90th, Suite 100
Redmond, WA 98052

Re: On-Site Laboratory Evaluation Report - 19 May 1994

Dear Mr. Carr:

The On-Site Laboratory Evaluation Report detailing findings noted during the 22-25 March 1994 audit has been reviewed. The following details the actions taken by ARI to address the deficiencies noted in the report. All Standard Operating Procedures (SOPs) referenced in Volume II of the Kotzebue LRRS QAPP were submitted to AFCEE. Per Michael F. McGhee's letter of 10 May 1994, all SOPs were accepted by the Air Force.

1. Sample Receiving and Management

a. Sample custody/transfer is now documented through the use of custody transfer logbooks. Each sample transfer activity has been addressed. Logbook examples are provided.

b. Sample labels do not contain the storage bin location as this information is not known at the time of sample log-in. The storage bin used is dependent upon space availability at the time samples are placed in storage. The log-in staff do, however, indicate the storage bin location on the Inside Walk-In Log. This alerts the analysts and technicians to the sample locations within the refrigerator.

c. Main sample storage coolers are linked to the building security/alarm system. Should there be a malfunction, an alarm signal would be received by the security company. A key staff member would then be notified by the security company of the situation; corrective action would be taken at that time.

d. Currently, holding times are monitored very efficiently by log-in staff , analytical/prep. section supervisors and analysts. Upon sample receipt, chain of custody forms are reviewed by log-in staff. Samples with short holding times would be immediately brought to the attention of the section supervisor or pertinent analyst. Samples with longer holding times are processed normally. Each day, section supervisors and analysts review sample holding times. Sample processing is scheduled to ensure holding times are met.

ANALYTICAL RESOURCES INCORPORATED

Analytical Chemists & Consultants

333 Ninth Ave. North
Seattle, WA 98109-5187
(206) 621-6490
(206) 621-7523 (FAX)

2. Inorganic Analyses

2.1 Inorganic Sample Extraction Laboratory

a. The Standard Operating Procedure for sample spiking was completed. A copy of the completed SOP was forwarded to Tetra Tech, Redmond and Tetra Tech, San Bernardino.

b. Standard Operating Procedures for inorganic sample preparation have been completed. Copies were forwarded to Tetra Tech, Redmond and Tetra Tech, San Bernardino.

2.2 Inductively Coupled Argon Plasma, Atomic Absorption Spectroscopy

a. The standard number assigned during working standard preparation will be noted in the instrument calibration record to ensure unique identification of the standard.

b. Expiration dates have been added to the standard preparation logbook. Logbook examples are enclosed.

2.2.4 Quality Control Execution

a. Statistically derived MDLs and PQLs are being used for this project. Copies of MDL/PQL values for project parameters were previously provided to Tetra Tech, Redmond and Tetra Tech, San Bernardino.

2.2.5 Out of Control Events

a. Instructions for initiating corrective action are detailed in the instrument operation SOPs.

2.2.6 Standard Operating Procedures

a. The Standard Operating Procedure for sample spiking was completed. A copy of the completed SOP was forwarded to Tetra Tech, Redmond and Tetra Tech, San Bernardino.

2.2.7 Analytical Run Logbooks

a. Reasons for run termination will be noted on the run log. Actions taken will be noted on the run log. Major maintenance will be documented in the maintenance log. The analytical run verifying return to compliance (standard, blank, etc.) will be noted as such.

ANALYTICAL RESOURCES INCORPORATED

Analytical
Chemists &
Consultants

333 Ninth Ave. North
Seattle, WA 98109-5187
(206) 621-6490
(206) 621-7523 (FAX)

2.2.9 Maintenance Logs

a. Maintenance performed and the reason for the maintenance will be documented in the maintenance logs. Verification that control was regained will be noted in the run log (see 2.2.7.a). It is laboratory procedure to also address non-conformances on Corrective Action logs. These logs remain with the sample data and inform the data reviewers and project managers of problems encountered during the analytical run.

2.3 Cold Vapor Atomic Absorption for Mercury

2.3.3 Standard Storage, Comparability and Records

a. Working and intermediate standards are always made daily, just prior to beginning the analytical run. Volumetric flasks used for standard preparation are now labeled.

2.3.6 Standard Operating Procedures

a. The SOP for mercury analysis is complete. A copy of the completed SOP was forwarded to Tetra Tech, Redmond and Tetra Tech, San Bernardino.

2.3.7 Analytical Run Logbooks

a. The mercury run log has been revised to include details of the calibration curve. An example is enclosed.

2.4 Total Organic Carbon, SW 9060 Modified

2.4.6 Standard Operating Procedures

a. The SOP for total organic carbon analysis is complete. A copy of the completed SOP was forwarded to Tetra Tech, Redmond and Tetra Tech, San Bernardino.

2.4.7 Analytical Run Logbooks

a. A bound logbook for Total Organic Carbon analysis is now in use.

3. Organic Analyses

3.1 Organic Extractions

a. Spiking techniques are addressed in the latest version of the extraction SOPs (in final review). Sample removal and return to storage are detailed in the Internal Chain of Custody SOP.

ANALYTICAL
RESOURCES
INCORPORATED

Analytical
Chemists &
Consultants

333 Ninth Ave. North
Seattle, WA 98109-5187
(206) 621-6490
(206) 621-7523 (FAX)

b. Expiration dates are now written on spikes or surrogates.

c. Syringes and storage boxes are now labeled as to their use.

d. A separate ventilation system for the GPC is on order. Details of this ventilation system were provided to Tetra Tech, Redmond and Tetra Tech, San Bernardino.

3.3 Gas Chromatography (Methods SW 8020 and SW 8015/Gasoline)

a. SW 8020 will not be used for this project. Issues pertaining to SW 8020 are not addressed.

b. Certificates for Accustandard and Macroscientific gasoline standards are enclosed. Per the manufacturers, these certificates provide the maximum level of traceability for gasoline standards.

c. Sample control is maintained through the use of custody tracking logbooks. Instructions for custody maintenance are addressed in the Internal Chain of Custody SOP.

3.3.2 Quality Control Execution

a. Control limits for gasoline are available to the analyst. Limits were generated from Washington TPH-Gasoline method, which, according to the GC Supervisor, are applicable. Gasoline control limits are attached.

3.3.3 Out of Control Events

a. Return to control will be documented. The analytical run verifying return to compliance (standard, blank, etc.) will be noted as such.

3.3.4 Standard Operating Procedures

a. SOPs for the GC section have been revised and completed. Corrective action for out-of-control events have been addressed in the SOPs.

b. Surrogate acceptance limits are summarized in a table and available to all analysts. In the next SOP revisions, the table of acceptance limits will be included in each SOP as an appendix.

ANALYTICAL RESOURCES INCORPORATED

Analytical
Chemists &
Consultants

333 Ninth Ave. North
Seattle, WA 98109-5187
(206) 621-6490
(206) 621-7523 (FAX)

3.3.5 Quality Assurance

a. A Laboratory Auditing SOP which details the areas to be audited by the QA section, has been completed. A copy is enclosed. The QA section, which includes the Final QA Data Reviewers, will perform semiannual audits all laboratory sections for general and technical compliance to established procedures. Audit findings and results will be forwarded to the Lab Manager and Board of Directors. Deficiencies will be addressed as detailed in the Laboratory Auditing SOP.

3.4 Gas Chromatography (Methods SW8081/Organochlorine Pesticides and Polychlorinated Biphenyls and SW8015 Modified (LUFT)/ Diesel)

a. Calibration standards will be analyzed after every 10 samples. Calibration standards will be verified against a second source material from a different source than the primary source. Protocol is the primary standard source; NSI Environmental Solutions is the secondary standard source. Certificates for both sources are enclosed. For this project, second source continuing calibration analysis will be performed.

b. For this project, Method 8081 will be followed as written. Quantitation will be against the initial calibration curve.

c. GC calibration records are reviewed by the Final Data Reviewer, who is part of the QA section, during the data review process. As all laboratory data are reviewed prior to final approval and release, any calibration errors or discrepancies are detected at that time. Any problems or issues noted by the Final Data Reviewer will be discussed with the GC Supervisor.

3.4.2 Standard Storage, Comparability and Records

a. Expired standards will be removed from the current standards refrigerator.

b. Expiration dates of standards are now recorded in the preparation logbook. A logbook example is enclosed.

c. Standards in Refrigerator #17 have been reviewed. It appears that the inconsistent labeling noted during the audit was an isolated incident and does not routinely occur.

3.4.3 Quality Control Execution

a. Statistically derived MDLs and PQLs are being used for this project. Copies of MDL/PQL values for project parameters were previously provided to Tetra Tech, Redmond and Tetra Tech, San Bernardino.

ANALYTICAL RESOURCES INCORPORATED

Analytical Chemists & Consultants

333 Ninth Ave. North
Seattle, WA 98109-5187
(206) 621-6490
(206) 621-7523 (FAX)

b. For this project, Method 8081 will be followed as written. Quantitation will be against the initial calibration curve.

c. MDL studies for method 8081, including PCBs and Toxaphene, were completed. Copies of the MDL/PQL tables were forwarded to Tetra Tech, Redmond and Tetra Tech, San Bernardino.

d. Samples with outlying surrogate recoveries will be reanalyzed to confirm matrix interference.

3.4.5 Standard Operating Procedures

a. Standard Operating Procedures (SOPs) for method 8081 and 8015 modified are completed. Copies were forwarded to Tetra Tech, Redmond and Tetra Tech, San Bernardino.

b. Corrective actions are addressed in all SOPs in section 9.0, Corrective Actions. This format is consistent for all SOPs throughout the laboratory. All finalized, approved SOPs will have corrective actions detailed in this section.

c. The analysts are aware of appropriate corrective actions for outlying surrogate recoveries. The ARI Project Manager is often consulted to determine if a reanalysis is needed by the client, especially when insufficient sample volume remains for reextraction or due dates are imminent. The client may be contacted to determine the intended use of the data; the existing data may be usable by the client. If time and sample volume permits, reextractions and reanalyses are routinely performed when surrogate QC criteria are not met.

d. Calibration verification standard concentrations are detailed in the SOPs.

e. Spiking procedures are detailed in the Extractions SOPs (in final review).

f. Corrective actions for out-of-control events are detailed in the SOPs under section 9.0, Corrective Actions.

g. At the present time, ARI is equipped to analyze samples for pesticides by both CLP and method 8081.

ANALYTICAL RESOURCES INCORPORATED

Analytical
Chemists &
Consultants

333 Ninth Ave. North
Seattle, WA 98109-5187
(206) 621-6490
(206) 621-7523 (FAX)

3.4.7 Maintenance Logs

a. Maintenance performed and the reason for the maintenance will be documented in the maintenance logs. Verification that control was regained will be noted in the run log. It is laboratory procedure to also address non-conformances on Corrective Action logs. These logs remain with the sample data and inform the data reviewers and project managers of problems encountered during the analytical run.

3.5 Gas Chromatography/Mass Spectroscopy (SW 8260 Volatile Organics)

a. Certified, traceable standards are purchased for SW8260 analysis. It was brought to the analysts' attention that, although a standard mix is labeled "certified", this certification may not apply to all compounds in the mix. We are presently looking into alternate standard sources so that all compounds are traceable.

b. The SW 8260 SOP was developed from method 8260, revision 0. This revision states that, for continuing calibrations, 20% is the warning limit and 25% is the action limit. The analysts try to adhere to the 20% criteria.

3.5.3 Out of Control Events

a. The analytical run verifying return to compliance (standard, blank, etc.) will be noted as such.

3.5.4 Standard Operating Procedures

a. The SW 8260 SOP has been modified to conform as much as possible to SW-846. A copy of the SOP was forwarded to Tetra Tech, Redmond and Tetra Tech, San Bernardino.

b. A document control SOP has been developed and details how outdated SOPs and SOP revisions are handled. A copy is enclosed.

3.5.5 Quality Control Execution

a. Additional surrogates have been added to provide more quality control. However, for this project, surrogates will be quantitated as specified in method 8260.

b. The initial calibration does indeed cover a wider range than normally seen. This is to meet the requirement of some clients that the instrument be curved down to the level of quantitation.

ANALYTICAL RESOURCES INCORPORATED

Analytical Chemists & Consultants

333 Ninth Ave. North
Seattle, WA 98109-5187
(206) 621-6490
(206) 621-7523 (FAX)

c. The larger spiking list for 8260 contains all method compounds plus additional compounds. The additional compounds were added in response to the needs of clients other than the Air Force.

d. Sufficient data has been acquired for generation of 8260 control limits. This task will be completed by the QA group by June 15th. A copy of the control limits will be forwarded to Tetra Tech, Redmond and Tetra Tech, San Bernardino.

e. Response factors are reviewed by the analyst and Final Data Reviewer. Discrepancies or errors not detected by the analyst are found by the Final Data Reviewer. All data undergo such a review prior to final approval and release.

3.5.6 Quality Assurance

a. A Laboratory Auditing SOP which details the areas to be audited by the QA section, has been completed. A copy is enclosed The QA section, which includes the Final QA Data Reviewers, will perform semiannual audits all laboratory sections for general and technical compliance to established procedures. Audit findings and results will be forwarded to the Lab Manager and Board of Directors. Deficiencies will addressed as detailed in the Laboratory Auditing SOP.

b. Manual integrations are documented on the run log and identified on the quantitation report with a unique notation. The analyst generates ion windows for each manually integrated compound. Manual integrations are then checked by the Final Data Reviewer during the data review and approval process. The Final Data Reviewer also initials the quantitation report to indicate manual integrations have been checked.

3.6 Gas Chromatography/Mass Spectrometry (SW 8270 - Organic Semivolatiles)

3.6.1 Calibration and Quantitation

a. Calibration concentrations for each instrument are dependent upon the instrument's linear range. Therefore, the concentrations may differ between instruments. It is standard policy, however, that if a sample concentration exceeds the instrument calibration range, the sample is reanalyzed at a dilution.

b. A SOP for method 8270 has been finalized and approved. The SOP conforms to method 8270. Copies of the SOP were forwarded to Tetra Tech, Redmond and Tetra Tech, San Bernardino.

c. MDL study results are based on actual laboratory data. Additional MDL studies will be performed periodically to develop MDLs which reflect laboratory capability.

ANALYTICAL RESOURCES INCORPORATED

Analytical
Chemists &
Consultants

333 Ninth Ave. North
Seattle, WA 98109-5187
(206) 621-6490
(206) 621-7523 (FAX)

d. Analysts have been instructed to indicate extraction dates for standards.

e. Analysts have been instructed to indicate internal standard concentrations on the containers.

f. Neat standards without expiration dates are kept by the section for internal checks. Any standards for which the quality appeared questionable were disposed.

3.6.2 Quality Control Execution

a. When applicable, laboratory control limits will be compared to method control limits. If laboratory control limits are wider than method control limits, the limits will be evaluated frequently to determine if it is possible to achieve those limits specified in the method.

b. Laboratory control limits have been generated for SW 8270, but not finalized. The QA section will finalize these limits by June 15th. A copy of the control limits will be forwarded to Tetra Tech, Redmond and Tetra Tech, San Bernardino.

3.6.4 Standard Operating Procedures

a. The SW 8270 SOP has been finalized and approved. A copy of the SOP was forwarded to Tetra Tech, Redmond and Tetra Tech, San Bernardino.

b. A SOP for Organic Standards Preparation is in final review. It should be finalized and approved within the next two weeks.

3.6.6 Quality Control Records

a. A Laboratory Auditing SOP which details the areas to be audited by the QA section, has been completed. A laboratory-wide audit will be conducted by the QA section.

b. Donn Patton's role as Final Data Reviewer is a quality assurance function. As the Final Data Reviewers' role is primarily QA, ARI management is considering a minor restructuring that would have all Final Data Reviewers as part of the QA section. Any anomalies or issues noted during data review (which covers all results and laboratory data) would be addressed through the QA manager. To date, this restructuring has not been finalized.

ANALYTICAL RESOURCES INCORPORATED

Analytical Chemists & Consultants

333 Ninth Ave. North
Seattle, WA 98109-5187
(206) 621-6490
(206) 621-7523 (FAX)

3.6.7 Maintenance Logs

a. Logbooks for each instrument are now in place. Pages in each logbook are consecutively numbered.

b. Major maintenance will be documented in the maintenance log. In the run log, the analytical run verifying return to compliance (standard, blank, etc.) will be noted as such.

c. The analysts have been instructed that all log entries must be signed or initialed. The QA section will confirm this is occurring.

3.7 Total Petroleum Hydrocarbons EPA Method 418.1

3.7.2 Standard Storage, Comparability and Records

a. Analysts have been informed that all standards must be labeled with preparation and expiration dates. As the instrument is shared by two sections, the guidelines for standard labeling/logbook completion were understood by one section, but not the other. Both sections are now aware of standard labeling requirements. The QA section will confirm this is occurring.

b. The standard traceability issue has been reviewed. It appears that the standard number was incorrectly written in the log. As part of routine QA section audits, standard traceability will be checked in all lab sections.

3.7.3 Quality Control Execution

a. The section supervisor has been instructed on how to evaluate control charts for out of control situations. At the time of the audit, control charts were being completed, but not reviewed for trends. A copy of the control chart in use at the time of the audit is enclosed.

3.7.4 Out-of-Control Events

a. A maintenance log is now in use. Out of control situations will be noted on the run logs and the Corrective Action form. Analytical runs that verify control was regained (standards, blanks, etc.) will be noted as such in the run log.

3.7.5 Standard Operating Procedures

a. SOPs for method 418.1 soil and water have been finalized and approved. A copy was forwarded to Tetra Tech, Redmond and Tetra Tech, San Bernardino.

ANALYTICAL RESOURCES INCORPORATED

Analytical
Chemists &
Consultants

333 Ninth Ave. North
Seattle, WA 98109-5187
(206) 621-6490
(206) 621-7523 (FAX)

3.7.7 Maintenance Logs

a. A maintenance log is now in place for method 418.1.

The QA section has been working with the section supervisor to ensure that 418.1 analysis is adequately documented and properly performed. Logs and SOPS have been implemented.

4. Data Packages

The Project Manager is aware of the recommendations and will incorporate these recommendations into the project scope.

5. Quality Assurance Project Plan for Kotzebue LRRS

The Project Manager is aware of the recommendations and will incorporate these recommendations into the project scope.

6. Analyst Training

a. Training documentation is not yet complete. Training records are in the laboratories; the Training SOP is being completed. The SOP will be completed within the next 30 days.

I will be sending a follow-up letter to confirm that outstanding items have been completed. If you have any questions or additional information, please feel free to call me at (206) 621-6490.

Sincerely,

ANALYTICAL RESOURCES, INC.

Michelle J. Turner

Michelle J. Turner
Quality Assurance Officer

cc: Dr. Garabed Kassakhian, Tetra Tech, San Bernardino

APPENDIX I – 5% RAW LABORATORY DATA AUDIT REPORT

KOTZEBUE LONG RANGE RADAR STATION

Remedial Investigation/Feasibility Study

MAGNETIC TAPE AND 5% RAW DATA AUDIT OF ANALYTICAL RESULTS

ANALYTICAL RESOURCES, INC.
Seattle, Washington

27-30 September 1994

Tetra Tech, Inc.
15400 NE 90th Street, Suite 100
Redmond, Washington 98053-3521

Tetra Tech, Inc.
348 W. Hospitality Lane, Suite 300
San Bernardino, California 92408-3216

Audited by: Lisa L Arrasmith
Lisa Arrasmith

G.H. Kamakhian for Michael W. Wilson
Michael Wilson

Magnetic Tape and 5% Raw Data Audit
of
Analytical Results

The Magnetic Tape and 5% Raw Data Audit of Analytical Resources, Incorporated (ARI), Seattle, Washington was conducted on 27-30 September 1994. At the time of the audit, ARI had already produced a total of 7 sample delivery groups (SDGs) for the Remedial Investigation/Feasibility Study (RI/FS) at Kotzebue Long Range Radar Station (LRRS), Project.

The purpose of this audit was to determine the degree in which the raw data matched the reported results sent to Tetra Tech, Inc. in the SDG H686 (Inorganics and AK 102 Methods only)and the Performance Evaluation (PE) Sample in SDG H753 (All Organic and Inorganic Methods).

This report consists of four parts, as listed below:

1. List of Tetra Tech, Inc. auditors, ARI personnel, and the Orientation Meeting summary.

2. Audit Findings. Section 2.1 contains the Organics and Section 2.2 contains the Inorganics and Diesel Range Hydrocarbons audit findings. Each Section lists the Methods and Samples examined, the criteria for the raw data audit, pertinent equations for calculating audit results, and the audit results.

3. Magnetic Tape Audit Method description (Section 3.0), Results from the Tape Audit for the PE Sample (Section 3.1) and Memorandum of Understanding Documents (Section 3.2).

4. The Debriefing Meeting summary with Findings and Conclusions (Section 4.0), Recommendations (Section 4.1).

1. List of Auditors, ARI Personnel and Summary of the Orientation Meeting (27 September 1994)

Tetra Tech, Inc. Auditors: Ms. Lisa L. Arrasmith
Mr. Michael Wilson

ARI Personnel: Mr. John Hicks, Project Manager
Ms. Michelle Turner, Manager, Quality Assurance
Ms. Suzanne Kitwin, Quality Assurance Coordinator

Orientation Meeting: 10:30 am, Tuesday, 27 September 1994.

Tetra Tech stated that the SDGs H686 and H753 would be the subject of the Raw Data Audit. The Magnetic Tape Audit Would be conducted on the PE sample H753 located in SDG H753. The

primary focus of the tape audit would be Method 8260 due to a missed Carbon Tetrachloride result. The PE Certified Results were made known at this time, as authorized by the project manager Mr. Rod Carr (Tetra Tech, Inc., Redmond, WA). It was also stated that some resolution to the use of ambiguous qualifiers would be needed to prevent possible data quality errors or misunderstandings.

2.0.0 Audit Findings

2.1.0 Organics

2.1.1 Organics Audit Methodology

The following is an outline of the procedure followed to audit the organics raw data. All calculations are based on the values from the computer output of the analytical instrument used to generate the raw data. The original raw data sheets must be used and not photocopies of the raw data.

- The tuning standards for Gas Chromatograph/Mass Spectrometry (GC/MS) Methods are checked for ion intensity criteria as listed in each method.
- The initial and/or continuing calibrations are checked by calculating the Calibration Check Compounds (CCC) and the System Performance Check Compounds (SPCC) for each calibration, and comparing these values to the SDG reported values. They should agree within 1%.
- The Laboratory Control Sample (LCS) recoveries are calculated for 10% of the compounds and then compared to SDG percent recoveries.
- The Matrix Spike/Matrix Spike Duplicate (MS/MSD) recoveries were calculated by using values from 10% of the spiked compounds. Calculate the % RSD for the same 10% and compare to the SDG data.
- Calculate the surrogate recovery for the blank, LCS, MS/MSD and the sample the MS/MSD was derived from. Ten percent of the environmental samples should also be calculated. Compare with SDG results.
- Visually inspect the chromatograms for the blank, the low level standard, and 10% of all other runs. Look for peaks unlabeled or crossed out, get an explanation for these peaks. Check that the elution order is correct.
- Check that the 12 hour time clock for GC/MS methods was observed for all samples, standards, spikes and blanks.
- When the raw data matches the SDG data there is no discrepancy to be reported, the statement "All values checked were found to correlate" will be used.

2.1.2 Calculation Formulas

- Response Factor = $\frac{\text{(Response of Analyte)(Conc. of Internal Standard)}}{\text{(Response of Internal Standard)(Conc. of Analyte)}}$

- % Difference = $\frac{\text{(Response Factor I - Response Factor from Daily Cal.)(100)}}{\text{Response Factor from Initial Cal.}}$

- % Relative Standard Deviation = $\frac{\text{(Std. Deviation of Response Factors)(100)}}{\text{Mean of Response Factors}}$

- % Recovery = $\frac{\text{(Measured Value for Reference Compound)(100)}}{\text{True Value for Reference Compound}}$

2.1.3 Organics Audit Results

Organochlorine Pesticides and Polychlorinated Biphenyls

Method: SW8081

Analyst Interviewed: Peter Kepler

After reviewing several SDGs, six data quality issues were identified which required resolution. These issues and their explanations were as follows:

- Use of the "Y" qualifier which increased PQLs

  Due to large concentrations of hydrocarbon contamination which eluted across retention time windows for several pesticides, the laboratory compensated for this background interference by increasing the Practical Quantitation Limit (PQL) and flagging the PQL with the "Y" qualifier. However, this practice is difficult to defend analytically since it is subjective in nature, and not addressed by USEPA Method 8081.
  The usual protocol for dealing with contaminated extracts suggests the use of absorptive chromatography to selectively trap the contaminants. However, when contamination levels require several absorptive chromatography runs, the resulting loss of target analytes, as measured by surrogate recovery, usually fail quality control criteria. Qualifying the PQL, may give the appearance that the lab is relinquishing its responsibility to determine low level concentrations of Pesticides and Polychlornated Biphenyl (PCB) analytes. In addition, the Air Force's database format is incompatible with increased PQLs for individual analytes.

After talking to the laboratory, it was agreed that the "Y" qualifier would be replaced with a "Z" qualifier. The "Z" qualifier impacts the result only and does not raise the PQL. In a Memorandum of Understanding (MOU) document which was authorized and signed by Mr. Roderick Carr (Project Manager, Tetra Tech, Inc.), Mr. Michael Wilson (Auditor, Tetra Tech, Inc.), and Mr. John Hicks (Project Manager, Analytical Resources, Inc.), the "Z" qualifier was defined and an agreement was stated. This Memorandum of Understanding is presented in Section 3.2 of this report.

- Use of the "X" qualifier which had two contradicting definitions

In a similar situation as with the "Z" qualifier, the "X" qualifier is used to denote results which, in the opinion of the analyst, are not true hits for target analytes, and are artifacts due to hydrocarbon contamination. However, the "X" qualifier is used when definite peaks in the correct retention time window, on both columns, are observed but peak areas and/or peak shapes between each column are not consistent with standard values. The use of the "X" qualifier seems appropriate in these situations where heavy contamination exists. However, the case narrative gives one definition and the report forms give another definition. The case narrative definition is the correct definition. A Memorandum of Understanding was generated to address this problem, and is presented in Section 3.2 of this report.

- Large variations in analyte concentrations between dilutions

When target analytes are detected at concentrations above the calibration range, a dilution is needed to bring the concentration back into the calibration range. Other target analytes detected which were not overrange are again detected in the dilution analysis, however the concentration calculated from the dilution shows a large increase. This increase is due to quantitation inaccuracy at the bottom of the calibration range. This relatively small quantitation error is then multiplied by the dilution factor which produces the large error reported on the data sheets. However, this issue should not be a problem since those analytes that caused a sample to be run at dilution due to their overrange concentration results, should be the only valid values taken from a diluted run.

- Lack of Gel Permeation Chromatography clean-up for contaminated samples

Gel Permeation Chromatography (GPC) is used to reduce the amount of high molecular weight compounds, such as resins or polymers, that may interfere in an analysis. This type of clean-up is usually associated with soil extracts. The soil samples for this project were contaminated with low molecular weight compounds such that GPC has little effect on reducing interfering contamination. Since several samples were subjected to GPC and showed no effect in reducing contamination, this clean-up method was halted. The normal Florisil clean-up was used on contaminated samples as per the method.

- Apparent blank contamination requiring qualifiers

  On occasion, the blank showed some contaminations which were qualified with the "X" qualifier, which indicates the interferences are not target analytes. The method does not require a flat baseline for the blank, but does require the absence of target analytes. Therefore, the lab is compliant with method blank requirements.

- Surrogate control limits differ between QC and environmental samples

  For this method the surrogate control limits for the blank and laboratory control samples (LCS) are different than the surrogate control limits for the environmental samples. It would normally be expected that the blank and LCS surrogate control limits would show tighter values given the reagent water matrix. However, the opposite is true and the apparent reason being the smaller population of QC data points relative to the much larger population of environmental data points, has an inherently lower confidence level which translates to wider limits.

Conculsions

Concerning the 5% raw data audit of 8081, the raw data matched the reported results for the SDG H753 P.E. sample. No certified analytes were missed, and after inspection of the raw data, all calculations and use of the "X" qualifier were correct and justified.

Volatile Organic Compounds

Method: SW8260

Analyst Interviewd: Jane Alexander

During audit preparation several issues came to light which needed resolution. These issues are as follows:

- Use of the "Y" qualifier which increased PQLs

  Due to large concentrations of hydrocarbon contamination which eluted across retention time windows for several volatile compounds, the laboratory compensated for this background interference by increasing the Practical Quantitation Limit (PQL) and flagging the PQL with the "Y" qualifier. However, this practice is difficult to defend analytically since it is subjective in nature, and not addressed by USEPA Method 8260. The usual protocol for dealing with contaminated samples or extracts suggests the sample should be diluted since no column clean-up is used for this method. Qualifying the PQL, may give the appearance that the lab is relinquishing its responsibility to determine low

level concentrations of volatile analytes. In addition, the Air Force's database format is incompatible with increased PQLs for individual analytes.

After talking to the laboratory, it was agreed that the "Y" qualifier would be replaced with a "Z" qualifier. The "Z" qualifier impacts the result only and does not raise the PQL. In a Memorandum of Understanding document which was authorized and signed by Mr. Roderick Carr (Project Manager, Tetra Tech, Inc.), Mr. Michael Wilson (Auditor, Tetra Tech, Inc.), and Mr. John Hicks (Project Manager, Analytical Resources, Inc.), the "Z" qualifier was defined and an agreement was stated. This Memorandum of Understanding is located in Section 3.2 of this report.

- Use of the "X" qualifier which had two contradicting definitions

  In a similar situation as with the "Z" qualifier, the "X" qualifier is used to denote results which, in the opinion of the analyst, are not true hits for target analytes, and are artifacts due to hydrocarbon contamination. However, the "X" qualifier is used when definite peaks in the correct retention time window, are observed but the mass spectral information are not consistent with standard values. The use of the "X" qualifier seems appropriate in these situations where heavy contamination exists and no tentative identification requirement is in effect. However, the case narrative gives one definition and the report forms give another definition. The case narrative definition is the correct definition. The Memorandum of Understanding addressing this issue is presented in section 3.2 of this report.

- Surrogate control limits differ between QC and environmental samples

  For this method the surrogate control limits for the blank and laboratory control samples (LCS) are different than the surrogate control limits for the environmental samples. It would normally be expected that the blank and LCS surrogate control limits would show tighter values given the reagent water matrix. However, the opposite is true and the apparent reason being the smaller population of QC data points relative to the much larger population of environmental data points, has an inherent lower confidence level which translates to wider limits.

Conclusion

Concerning the 5% raw data audit of 8260, the raw data matched the reported results for the SDG H753. One certified analytes was missed and during the magnetic tape audit the reason was clearly determined to be analyst oversight. A discussion of this error is contained in the Magnetic Tape Audit Findings section 3.1 of this report.

5% Raw Data Audit
ARI, Seattle, WA
27-30 September 1994

Semi-Volatile Organic Compounds

Method: SW8270

Analyst Interviewed: Liz Anderson

During audit preparation several issues came to light which needed resolution. These issues are as follows:

- Absence of GPC clean-up for highly contaminated samples

  Gel Permeation Chromatography (GPC) is used to reduce the amount of high molecular weight compounds, such as resins or polymers, that may interfere in an analysis. This type of clean-up is usually associated with soil extracts. The soil samples for this project were contaminated with low molecular weight compounds such that GPC has little effect on reducing interfering contamination. Since several samples were subjected to GPC and showed no effect in reducing contamination, this clean-up method was halted. Failing GPC clean-up, contaminated extracts for Method 8270 are usually diluted.

- Use of the "Y" qualifier which increased PQLs

  Due to large concentrations of hydrocarbon contamination which eluted across retention time windows for several volatile compounds, the laboratory compensated for this background interference by increasing the Practical Quantitation Limit (PQL) and flagging the PQL with the "Y" qualifier. However, this practice is difficult to defend analytically since it is subjective in nature, and not addressed by USEPA Method 8270. The usual protocol for dealing with contaminated extracts suggests the sample should be diluted if GPC clean-up is not useful. Qualifying the PQL, may give the appearance that the lab is relinquishing its responsibility to determine low level concentrations of semivolatile analytes. In addition, the clients database format is incompatible with increased PQLs for individual analytes.

  After talking to the laboratory, it was agreed that the "Y" qualifier would be replaced with a "Z" qualifier. The "Z" qualifier impacts the result only and does not raise the PQL. In a Memorandum of Understanding document which was authorized and signed by Mr. Roderick Carr (Project Manager, Tetra Tech, Inc.), Mr. Michael Wilson (Auditor, Tetra Tech, Inc.), and Mr. John Hicks (Project Manager, Analytical Resources, Inc.), the "Z" qualifier was defined and an agreement was stated. This Memorandum of Understanding is presented in Section 3.2 of this report.

- Use of the "X" qualifier which had two contradicting definitions

  In a similar situation as with the "Z" qualifier, the "X" qualifier is used to denote results which, in the opinion of the analyst, are not true hits for target analytes, and are artifacts due to hydrocarbon contamination. However, the "X" qualifier is used when definite peaks in the correct retention time window, are observed but the mass spectral information are not consistent with standard values. The use of the "X" qualifier seems appropriate in these situations where heavy contamination exists and no tentative identification requirement is in effect. However, the case narrative gives one definition and the report forms give another definition. The case narrative definition is the correct definition. This Memorandum of Understanding is located in section 3.2 of this report.

Conclusion

Concerning the 5% raw data audit of 8270, the raw data matched the reported results in SDG H753. No certified analytes were missed.

2.2.0 Inorganics

2.2.1 Inorganics Audit Methodology

The following is an outline of the procedure followed to audit the inorganics raw data. All calculations are based on the values from the computer output of the analytical instrument used to generate the raw data. The original raw data sheets must be used and not photocopies of the raw data.

- Choose a Sample Delivery Group (SDG) to review. If a performance evaluation (PE) sample was submitted to the lab, include its SDG.
- Obtain the raw data for the SDG of interest, including instrument print outs, strip charts and copies of analysts notes.
- Review the SDG's case narrative. Any discrepancies or out of control instrumentation should be verified in the SDG and the raw data.
- Find the USEPA Method SW6010 results in the SDG and the raw data.
- Choose a sample from the SDG to review. Find the corresponding sample results in the raw data package.
- Compare the analytical results and analysis date in the SDG to the results and date from the raw data package.

- For soil samples, confirm calculations accounting for percent solids content. Confirm Matrix Spike percent recoveries and relative percent difference between MS/MSD and duplicate samples.

- Compare and confirm QC results reported in the SDG, the raw data package and the laboratory's QAPP for:

  Initial and Continuing Calibrations Verifications;
  Initial and Continuing Calibration Blanks;
  Matrix Spikes, Matrix Duplicates and/or Matrix Spike Duplicates;
  Method Blanks and Laboratory Control Samples.

- Document any and all discrepancies found. Immediately contact the department manager, section manager or analyst to discuss and resolve any discrepancies found between the SDG, the raw data package and the QAPP. Completely document the resolution and/or explanation of any discrepancies.

- When all discrepancies are resolved (or none are found), repeat the review procedure for other samples and methods in the SDG.

2.2.2 Calculations

Calculations for soil samples were confirmed from the raw data and the preparation log to the results reported in the SDG. The calculation is as follows:

SDG result (mg/Kg) = instrument result (mg/L) * prep. log conversion (L/g) * (1000 g/Kg)

2.2.3 Inorganics Audit Results

Metals

METHOD SW6010 (ICP)

SDGs Reviewed: H686

Samples reviewed: H686L = SS07-SD1-01 (soil)
H686N = SS07-SD3-01 (soil)
H686E = SS07-SW3-01 (total)
H686F = SS07-SW3-01 (dissolved)

All values checked were found to correspond.

Calibration Verifications (ICVs & CCVs) and Calibration Blanks (ICBs & CCBs):

Calibration results are not included in level I data packages, however, the calibrations were in the raw data at the correct frequency. Any out of control calibrations and their associated samples were rerun as noted in the SDG case narratives.

Method Blanks (PBW, PBS): All values checked were found to correspond.

Matrix Spike/Matrix Spike Duplicates/Matrix Duplicates (MS/MSD/MD) :
All values checked were found to correspond.

Laboratory Control Sample (LCS): All values checked were found to correspond.

Although all the raw data values checked were found to correspond to the values in the SDG, there were several discrepancies within the SDG and the QAPP.

1. The manganese PQL was reported on page 167 as 0.00 mg/L. The MDL study included in the SDG for ICP metals in water dated 5/94 indicates a manganese PQL of 0.01 mg/L. This discrepancy appears to be a typographical error. Replacement pages from ARI would be sufficient to correct the problem with no impact to data quality.

2. Thirteen dissolved metal PQLs are not consistent with the total metals, the QAPP or MDL study included in the SDG for ICP metals in water dated 5/94. This discrepancy could result in inconsistent "J" flagging of the data in Tetra Tech's Level I review. ARI should review their data packages and submit replacement pages for all of the affected data.

METHOD SW7000s

SDGs Reviewed: H686

Samples reviewed: H686L = SS07-SD1-01 (soil)
H686N = SS07-SD3-01 (soil)
H686E = SS07-SW3-01 (total)
H686F = SS07-SW3-01 (dissolved)

All values checked were found to correspond.

Calibration Verifications (ICVs & CCVs) and Calibration Blanks (ICBs & CCBs):

Calibration results are not included in level I data packages, however, the calibrations were in the raw

data at the correct frequency. Any out of control calibrations and their associated samples were rerun as noted in the SDG case narratives.

Method Blanks (PBW, PBS): All values checked were found to correspond.

Matrix Spike/Matrix Spike Duplicates/Matrix Duplicates (MS/MSD/MD) : All values checked were found to correspond.

Laboratory Control Sample (LCS): All values checked were found to correspond.

Although all the raw data values checked were found to correspond to the values in the SDG, there were discrepancies within the SDG and the QAPP. The lead PQL in the SDG is 0.006 mg/L, however, the lead PQL in the QAPP and the MDL study included in the SDG is 0.004 mg/L. This discrepancy could result in inconsistent "J" flagging of the data in Tetra Tech's Level I review. ARI should review their data packages and submit replacement pages for all of the affected data.

DIESEL RANGE HYDROCARBONS
METHOD AK 102

SDGs Reviewed: H686

Samples reviewed:	H686E	SS07-SW3-01
	H686D	SS07-SW2-01
	H686C	SS07-SW1-01
	H686J	SS12-SW3-01
	H686H	SS12-SW1-01 (and dilution)
	H686I	SS12-SW2-01 (and dilution)
	H686A	SS12-SW4-01

Calibration Verifications (ICVs & CCVs) and Calibration Blanks (ICBs & CCBs):

Calibration results are not included in Level I data packages, however, the calibrations were in the raw data at the correct frequency. Any out of control calibrations and their associated samples were rerun as noted in the SDG case narratives.

Method Blanks (PBW, PBS): All values checked were found to correspond.

Matrix Spike/Matrix Spike Duplicates/Matrix Duplicates (MS/MSD/MD) : All values checked were found to correspond.

Laboratory Control Sample (LCS): All values checked were found to correspond.

Surrogate Recoveries: The percent recoveries found in the SDG were calculated correctly.

The aqueous surrogate spike concentration in the raw data is 0.045 mg/L, however the spiking concentration listed in the QAPP or the 7 July 1994 SOP is 0.075 mg/L. The analyst indicated that the QAPP and the SOP both need to be revised and that the 0.045 mg/L spiking concentration listed in the raw data is correct.

Although the raw data values checked were found to correspond to the values in the SDG, there were discrepancies within the SDG and the QAPP. The diesel PQL in the SDG was 0.11 mg/L for water and 7.1 mg/Kg for soil, however, the QAPP and the MDL study included in the SDG list a diesel PQL of 0.2 mg/L for water and 3 mg/Kg for soil. This discrepancy could result in inconsistent "J" flagging of the data in Tetra Tech's Level I review. ARI should review their data packages and submit replacement pages for all of the affected data.

3.0 Magnetic Tape Audit Methodology

The mechanism by which magnetic tape and the time continuum auditing is conducted is complex and detailed by virtue of the three dimensional nature of GC/MS data. However, for the purposes of this report, the following description of the Magnetic Tape Audit Methodology indicates the extent of data needed to fully use this QA/QC tool for Performance Evaluation (PE) Sample elucidation.

After reviewing all pertinent SDG data concerning the PE sample, the data files, directory files and data output files names must be determined for the following:

- Initial Calibration with associated BFB Tune;
- Continuing Calibration(s) with associated BFB Tune(s);
- Method Blank(s);
- MS/MSD Samples;
- LCS Sample(s);
- PE Sample and any dilution(s).

For one PE Sample the minimum files needed are twenty-three. After verifying that the correct files were downloaded without corruption, the files are then renamed in order that, during manipulations for audit purposes, no original files are overwritten. Overwritten files may cause re-downloading of the magnetic tape.

At this point the data from the hard copy SDG and the results from the analyst's raw data and the downloaded computer data output files are compared to each other. Any discrepancies are noted. Assuming the Quant ID File has not changed global method parameters significantly, and the distinct and

separate Calibration File Program has likewise not changed, the initial calibration data files are reprocessed and the Calibration File Program then operates on the initial calibration reprocessed data output files. Again, assuming these data output files were correctly integrated by the computer and no significant manual integration was needed, the average response factors generated by the Calibration Program are imported into the Quant ID File. For SW-846 Method 8260, these are the response factors for all applicable quantification, however, this is true only if the continuing calibration that is reprocessed, meets CCC and SPCC criteria. If the CCC or SPCC fail criteria, either the Initial Calibration data files or Continuing Calibration data file are wrong, or a computer/operator integration has occurred incorrectly.

If all criteria are correct, then the remaining data files are reprocessed and the resulting data output files are compared to the reported SDG results. These are the critical values that the tape audit verifies. Any discrepancies are noted and are issues that need to be resolved. Experience of the auditor is critical when these issues are being resolved.

3.1 Magnetic Tape Audit of Performance Evaluation Sample H753

A Magnetic Tape Audit for the Performance Evaluation (PE) sample (H753) was conducted on-site for EPA Methods 8260 and 8270. By previous arrangement, it was agreed the audit would be conducted in such a manner as to present minimum adverse impact on the laboratory's day-to-day operations. The Magnetic Tape Audit was initiated by downloading the data from the magnetic tape to the hard drive of the Finnigan Incos 50 MS Data System Computer. The tape audit was focused on EPA Method 8260 results, since an error had been detected only in this method and not in EPA Method 8270 results.

Carbon Tetrachloride (CCL_4) was the analyte missed in the PE sample, H753 for Method 8260. After reloading the tape, a peak with a mass spectra consistent with and at the correct retention time for, CCL_4, was observed. At this time, the peak was manually integrated and gave a value of 17.0 ng/ml, which was exactly the certified value. A diagnostic report was generated for this run when the sample was originally analyzed, and was again generated during this audit. The diagnostic report functions in such a way as to show all ion specific area responses, within the compounds retention time window, other QC parameters not withstanding. From the diagnostic report it was verified that the CCL_4 was indeed there, however, the top of the ion peak was missed, which caused this hit to be rejected. After examining the initial diagnostic report, the same information was observed, and at this point the Analyst admitted this information had been overlooked, and took responsibility for missing this analyte.

MEMORANDUM OF UNDERSTANDING

SUBJECT: "X" qualifier definition for Method 8081.

ISSUE: Two definitions of the "X" qualifier are concurrently in use.

RESOLUTION: The first definition of the "X" qualifier exists in the case narrative. The second definition exists on the Method 8081 Form I reports. The first definition, as specified in the case narrative, is correct.

AGREEMENT: The "X" qualifier definition specified in the case narrative replaces the definition on the Method 8081 Form 1 reports.

TETRA TECH, INC. Project Manager Roderick A Carr

DATE: 9/30/94

TETRA TECH, INC. Quality Assurance Michael Wilson

DATE: 9/30/94

ANALYTICAL RESOURCES, INC. Project Manager John [illegible]

DATE: 9/30/94

MEMORANDUM OF UNDERSTANDING

SUBJECT: The use of the "Y" organic qualifier to acknowledge background interference which results in an increased Practical Quantitation Limit (PQL).

ISSUE: The increased PQLs are incompatable with the Client's database format.

RESOLUTION: Instead of qualifying the PQL value for background interference, the result value will be qualified so that the PQL will not increase. This result value qualifier will be indicated by the letter "Z." The "Z" qualifier is defined as follows:

> This flag denotes that, in the opinion of the analyst, the relevant compound may not be present at or below the indicated concentration due to interfering background contamination that prevents a positive or negative spectral confirmation.

AGREEMENT: For those sample delivery groups (SDG) which contain analytes flagged with the "Y" qualifier, an errata sheet will be provided by ARI. This errata sheet will explain that the "Y" qualifier, with the corresponding raised PQL, has been replaced in the sample results with the "Z" qualifier. The previously raised PQLs will default to the normal PQL level. The errata sheet will be an attachment to the case narrative and will be clearly marked as such.

TETRA TECH, INC. Project Manager _____

DATE: 9/30/94

TETRA TECH, INC. Quality Assurance _____

DATE: 9/30/94

ANALYTICAL RESOURCES, INC. Project Manager _____

DATE: 9/30/94

4.0 Debriefing Meeting

10:30 am, Friday, 30 September 1994

Tetra Tech, Inc. Personnel: Mr. Rodrick Carr, Project Manager (Tetra Tech, Inc. Redmond, Washington)
Ms. Lisa Arrasmith, Associate Scientist, Quality Assurance (Tetra Tech, Inc., San Bernardino Office)
Mr. Michael Wilson, Staff Chemist, Quality Assurance (Tetra Tech, Inc., San Bernardino Office)

ARI Personnel: Mr. John Hicks, Project Manager
Mr. Brian Beebe, Organics Supervisor
Mr. Peter Kepler, GC Supervisor
Ms. Suzanne Kitwin, Quality Assurance Coordinator

Findings:

- **Organic PE Sample-** For the organic section of PE sample H753, the laboratory missed only Carbon Tetrachloride in Method 8260, with the reason being an analyst oversight on the diagnostic report. There was one false positive hit detected which was acetone for Method 8260 at 16 ug/ml. However, our experience with this analyte in PE samples indicates, although claimed not to be a certified analyte, is indeed present in the PE sample as a contaminant.

- **Inorganic PE Sample-** For the inorganic section of PE sample H753, no analytes were missed, although there were three false positive detections. The three false positives were Calcium at 0.06 mg/L, Potassium at 0.7 mg/L, and Sodium at 0.2 mg/L with Calcium and Sodium also detected in the blank. Calcium was detected below the Practical Quantitation Limit (PQL) and Sodium was detected at the PQL. The evidence indicates these are lab contaminants and not from the PE sample. Potassium was detected above the PQL but not in the blank, however Potassium is a ubiquitous compound and with the data available, no determination of the source can be elucidated.

- **Qualifier Agreements-** The qualifiers "Y" and "X" have been addressed and agreements were made to smooth out any data quality misunderstandings that may have developed due to their use.

- **Method 6010 -** All raw data values checked were found to correspond to the values reported in the SDG. However, there were several discrepancies within the SDG and the QAPP. For example, the manganese PQL was reported on page 167 as 0.00 mg/L. The MDL study included in the SDG for ICP metals in water dated 5/94 indicates a manganese PQL of 0.01 mg/L. Thirteen dissolved metal PQLs are not consistent with the total metals, the QAPP or MDL study included in the SDG for ICP metals in water dated 5/94.

- **Method 7000s** - All raw data values checked were found to correspond to the values reported in the SDG. The discrepancies within the SDG and the QAPP are the lead PQL in the SDG is 0.006 mg/L, however, the lead PQL in the QAPP and the MDL study included in the SDG is 0.004 mg/L.

- **Method AK 102 Diesel Range Hydrocarbons** - The aqueous surrogate spike concentration in the raw data is 0.045 mg/L, however the spiking concentration listed in the QAPP or the 7 July 1994 SOP is 0.075 mg/L. The analyst indicated that the QAPP and the SOP both need to be revised and that the 0.045 mg/L spiking concentration listed in the raw data is correct.

Conclusions and Recommendation

- Overall, ARI produces high quality chemical analysis. The data ARI generates are indicative of the high standards of integrity the analysts demonstrated during the audit.

- Although highly contaminated samples were sent for analysis to ARI, the laboratory has consistently given results that show good laboratory practices were being followed.

- When the analysts make procedural changes to maintain the highest level of data integrity, SOPs need to be updated immediately and submitted to Tetra Tech so that the QAPP too can be updated immediately.

- ARI should submit replacement pages for the detection limit discrepancies noted in order to prevent erroneous "J" flagging in the Tetra Tech data review process and eliminate future confusion, while preserving data quality.

Recommendation

- Overall Analytical Resources Inc. has performed within the scope of work prescribed for this work effort. At this time all data quality objectives indicated for the analytical results will be met with ARI's deliverables.

APPENDIX J – SAMPLE CHAIN-OF-CUSTODY

TRA TECH, INC.
15400 NE 90th, Suite 100
Redmond, Washington 98052
(206) 883-1912
FAX (206) 881-6997

CHAIN OF CUSTODY

DOCUMENT 1 of 1

PROJECT NAME: Kotzebue LARS - IRA
PROJECT NO.: 9676-21
SAMPLERS: (signature) David R. Hoar
Tt Contact: Rick Osgood

SAMPLE ID	TIME	DATE	MEDIA: Air	Surface Water	Ground Water	Soil	Sediment			NUMBER OF CONTAINERS	ANALYSIS: AK 102 Extended	REMARKS
SS-01	12:00	10-7-94				X				2	X	Extended through C-40
SS-02	12:20	10-7-94				X				2	X	

RELINQUISHED BY (signature): David R. Hoar	DATE/TIME: 10/10/94 11:00	TOTAL NUMBER OF COTNAINERS: 4		RECEIVED FOR LAB BY (Signature)	DATE/TIME
RECEIVED BY (signature)	DATE/TIME	RELINQUISHED BY (signature)	DATE/TIME	CONDITION OF CONTENTS	TEMPERATURE UPON RECEIPT
RELINQUISHED BY (signature)	DATE/TIME	RECEIVED BY (signature)	DATE/TIME	REMARKS	
RECEIVED BY (signature)	DATE/TIME	METHOD OF SHIPMENT: Hand Delivered	AIRBILL NO.		

Copy Pink Copy

TRA TECH, INC.
15400 NE 90th, Suite 100
Redmond, Washington 98052
(206) 883-1912
FAX (206) 881-6997

CHAIN OF CUSTODY

DOCUMENT 1 of 1

PROJECT NAME: Kotzebue LRRS RI/FS | PROJECT NO.: 9676-13

SAMPLERS: (signature) David R. Hoe

Tt Contact:

Cooler # 346 The last Cooler

SAMPLE ID	TIME	DATE	MEDIA: Lab Water	Surface Water	Ground Water	Soil	Sediment	Drum Water	Purge Water	NUMBER OF CONTAINERS	ANALYSIS: 8260	AK102	8270	8081	Total Metals	REMARKS
AOC1-SW1	1333	7/27/94		X						4	3	1				
AOC1-SW1-MS	1333	7/27/94		X						4	3	1				
AOC1-SW1-MSD	1333	7/27/94		X						4	3	1				
Purge-Drum-Water	1400	7/28/94							X	5	3	1	1			
Drum Waste-Water	1400	7/28/94						X		7	3	1	1	1	1	
TB 66	1400	7/28/94	X							2	2					
AOC6-SB37-3.0	0938	7/27/94				X				1		X				
AOC5-SB25-3.5	1147	7/27/94				X				1		1				
Background-SS2-02	1757	7/28/94				X				1		1				

RELINQUISHED BY (signature): David R. Hoe	DATE/TIME: 7/28/94 1500	TOTAL NUMBER OF COTNAINERS: 29		RECEIVED FOR LAB BY (Signature)	DATE/TIME
RECEIVED BY (signature)	DATE/TIME	RELINQUISHED BY (signature)	DATE/TIME	CONDITION OF CONTENTS	TEMPERATURE UPON RECEIPT
RELINQUISHED BY (signature)	DATE/TIME	RECEIVED BY (signature)	DATE/TIME	REMARKS: Archive Metals Sample	
RECEIVED BY (signature)	DATE/TIME	METHOD OF SHIPMENT	AIRBILL NO.		

opy Pink Copy

TRA TECH, INC.
15400 NE 90th, Suite 100
Redmond, Washington 98052
(206) 883-1912
FAX (206) 881-6997

CHAIN OF CUSTODY

DOCUMENT 1 of 1

PROJECT NAME: Kotzebue LRRS RI/FS
PROJECT NO.: 9676-13
SAMPLERS: (signature) David R. Hoar
Tt Contact: Rick Osgood

Cooler # 334

SAMPLE ID	TIME	DATE	MEDIA: Air	Surface Water	Ground Water	Soil	Sediment	Lab Water	NUMBER OF CONTAINERS	ANALYSIS: 8260	8270	8081	AK102	AK101	REMARKS
SS11-SD1	1350	7/25/94					X		4	1	1	1	1		
AOC8-SB4-1.0	1427					X			5	1	1	1	1	1	
AOC9-SB4-1.5	1527					X			1				1		
TB 45 SB8 DNA	1800							X	2	2					
AOC4-~~SB6~~-2.0	1107	7/26/94				X			1				1		
AOC5-SB21-1.0	1156					X			1				1		
AOC4-SB7-6.3	1117					X			1				1		M, MS, MSD
AOC5-SB22-1.5	1357					X			1				1		
AOC5-SB23-3.0	1442					X			1				1		
AOC5-SB24-2.75	1535					X			1				1		

RELINQUISHED BY (signature)	DATE/TIME	TOTAL NUMBER OF COTNAINERS	18	RECEIVED FOR LAB BY (Signature)	DATE/TIME
David R. Hoar	7/26/94				
RECEIVED BY (signature)	DATE/TIME	RELINQUISHED BY (signature)	DATE/TIME	CONDITION OF CONTENTS	TEMPERATURE UPON RECEIPT
RELINQUISHED BY (signature)	DATE/TIME	RECEIVED BY (signature)	DATE/TIME	REMARKS: All AK102 5D.1 TAT	
RECEIVED BY (signature)	DATE/TIME	METHOD OF SHIPMENT	AIRBILL NO.		

Copy Pink Copy

TRA TECH, INC.
15400 NE 90th, Suite 100
Redmond, Washington 98052
(206) 883-1912
FAX (206) 881-6997

CHAIN OF CUSTODY

DOCUMENT 1 of 1

PROJECT NAME Kotzebue LRAS RI/FS | PROJECT NO. 9676-13

SAMPLERS: (signature) David R. Hoe

Tt Contact: Rick Osgood

Cooler # 3641

SAMPLE ID	TIME	DATE	MEDIA: Air	Surface Water	Ground Water	Soil	Sediment	Lab Water	NUMBER OF CONTAINERS	ANALYSIS: 8260	AK102	8270	8081 Pest + PCB	REMARKS
SS11-SW1	1334	7/25/94		X					6	3	1	1	1	
SS11-SW1-MS	1334			X					3	3				Matrix Spike
SS11-SW1-MSD	1334			X					3	3				Matrix Spike Dup.
TB-10	1700							X	2	2				
AOC1-EB1	1030							X	3	3				

RELINQUISHED BY (signature) David R. Hoe	DATE/TIME 7/25/94 1900	TOTAL NUMBER OF COTNAINERS 17		RECEIVED FOR LAB BY (Signature)	DATE/TIME
RECEIVED BY (signature)	DATE/TIME	RELINQUISHED BY (signature)	DATE/TIME	CONDITION OF CONTENTS	TEMPERATURE UPON RECEIPT
RELINQUISHED BY (signature)	DATE/TIME	RECEIVED BY (signature)	DATE/TIME	REMARKS	
RECEIVED BY (signature)	DATE/TIME	METHOD OF SHIPMENT	AIRBILL NO.		

opy Pink Copy -

TETRA TECH, INC.
15400 NE 90th, Suite 100
Redmond, Washington 98052
(206) 883-1912
FAX (206) 881-6997

CHAIN OF CUSTODY

DOCUMENT 1 of 1

PROJECT NAME: Kotzebue LRI's RI/FS | PROJECT NO.: 9676-13

SAMPLERS: (signature) David R. Hoar

Tt Contact: Rick Osmond

SAMPLE ID	TIME ~~DATE~~ Date	DATE ~~TIME~~ Time	MEDIA: Air	Surface Water	Ground Water	Soil	Sediment	Lab Water	NUMBER OF CONTAINERS	ANALYSIS: AK102 (HCl)	8270	8081	SW6010	SNTIAL Mod (Lead)	REMARKS
AOC4-EB1	7/25/94	1030						X	4	1	1	1	x	x	Carlon # 307
~~SS11-SW1~~	~~7/25/94~~	~~1334~~		~~X~~						~~1~~	~~1~~	~~1~~			~~DUP~~
SS11-SW1-MS	7/25/94	1334		X					3	1	1	1			Matrix Spike
SS11-SW1-MSD	7/25/94	1334		X					3	1	1	1			Matrix Spike Dup.

RELINQUISHED BY (signature): David R. Hoar	DATE/TIME: 7/25/94/1822	TOTAL NUMBER OF COTNAINERS: 10		RECEIVED FOR LAB BY (Signature)	DATE/TIME
RECEIVED BY (signature)	DATE/TIME	RELINQUISHED BY (signature)	DATE/TIME	CONDITION OF CONTENTS	TEMPERATURE UPON RECEIPT
RELINQUISHED BY (signature)	DATE/TIME	RECEIVED BY (signature)	DATE/TIME	REMARKS: All AK 102 5 Day TAT and Contain HCl to pH < 2.0	
RECEIVED BY (signature)	DATE/TIME	METHOD OF SHIPMENT	AIRBILL NO.		

Copy Pink Copy

TETRA TECH, INC.
15400 NE 90th, Suite 100
Redmond, Washington 98052
(206) 883-1912
FAX (206) 881-6997

CHAIN OF CUSTODY

DOCUMENT 1 of 1

PROJECT NAME: Kotzebue LRRS RI/FS | PROJECT NO.: 9676-13

SAMPLERS: (signature) David R. Hoe

Tt Contact: Rick Osgood

Cooler # 325

SAMPLE ID	TIME	DATE	MEDIA: Air	Surface Water	Ground Water	Soil	Sediment	Water	NUMBER OF CONTAINERS	ANALYSIS: 8260	8270	TCL+AK 102	8081 Pest+PCB	Full TCLP	REMARKS
5512-SD5-01	1140	7-22-94				X			4	1	1	1	1		
5512-SB37-2.0	1235					X			1			1			
5512-SB38-1.0	1400					X			1			1			
5512-SB39-1.5	1430					X			1			1			
5512-SB40-2.5	1500					X			1			1			
AOC12-SS1	1545					X			4	1	1	1	1		PCBs Present
5512-SB31-2.0	1151					X			1			1			
AOC5-SB17-1.2	1633					X			1			1			
AOC5-SB20-1.0	1811					X			1			1			
5512-SB30-2.0	1126					X			1			1			
AOC5-SB19-2.5	1739					X			1			1			
5512-SB35-1.2	1412					X			1			1			
5512-SB34-1.0	1232					X			1			1			
5512-SB32-1.1	1509					X			1	5502-TAR-01					
AOC5-SB18-1.0	1721					X			1			1			
5512-SB36-0.8	1442					X			1			1			
5512-SB33-1.0	1211					X			1			1			
TB-33	18:00							X	2	2					
5502-TAR-01	16:30	7-21-94							1					1	Tar Product

RELINQUISHED BY (signature): David R. Hoe	DATE/TIME: 7/24/94 1900	TOTAL NUMBER OF COTNAINERS: 25		RECEIVED FOR LAB BY (Signature)	DATE/TIME
RECEIVED BY (signature)	DATE/TIME	RELINQUISHED BY (signature)	DATE/TIME	CONDITION OF CONTENTS	TEMPERATURE UPON RECEIPT
RELINQUISHED BY (signature)	DATE/TIME	RECEIVED BY (signature)	DATE/TIME	REMARKS	
RECEIVED BY (signature)	DATE/TIME	METHOD OF SHIPMENT	AIRBILL NO.		

Copy Pink Copy

ETRA TECH, INC.
15400 NE 90th, Suite 100
Redmond, Washington 98052
(206) 883-1912
FAX (206) 881-6997

CHAIN OF CUSTODY

DOCUMENT 1

PROJECT NAME Kotzebue LRRS RI/FS | PROJECT NO. 9676-13

SAMPLERS: (signature) David R. Hoar

Tt Contact: Rick Osgood

SAMPLE ID	TIME	DATE	MEDIA: Air	Surface Water	Ground Water	Soil	Sediment	Water	NUMBER OF CONTAINERS	ANALYSIS: 8260	8270	AK 102 (Acid. Ext.)	8081 Pest+PCB	Extra Volume	REMARKS
SS12-SW5-01	1120	7-22-94		X					7	3	1	1	1	1	
TB 37	1700	7-22-94						X	2	2					

RELINQUISHED BY (signature) David R. Hoar	DATE/TIME 7/24/1900	TOTAL NUMBER OF COTNAINERS 9		RECEIVED FOR LAB BY (Signature)	DATE/TIME
RECEIVED BY (signature)	DATE/TIME	RELINQUISHED BY (signature)	DATE/TIME	CONDITION OF CONTENTS	TEMPERATURE UPON RECEIPT
RELINQUISHED BY (signature)	DATE/TIME	RECEIVED BY (signature)	DATE/TIME	REMARKS	
RECEIVED BY (signature)	DATE/TIME	METHOD OF SHIPMENT	AIRBILL NO.		

opy Pink Copy

.TRA TECH, INC.
15400 NE 90th, Suite 100
Redmond, Washington 98052
(206) 883-1912
FAX (206) 881-6997

CHAIN OF CUSTODY

DOCUMENT 1 of 1

PROJECT NAME: Kotzebue LRRS RI
PROJECT NO.: 9676
SAMPLERS: (signature) [signature] / [signature]
Tt Contact: Rick Osgood

Cooler #365

SAMPLE ID	TIME	DATE	MEDIA: Air	Surface Water	Ground Water	Soil	Sediment	Lab H_2O	NUMBER OF CONTAINERS	ANALYSIS: AK 102	AK 101	REMARKS
AOC3-SB5-2.0	1204	7/21/94				X			2	1	1	
AOC3-SB6-2.5	1317					X			2	1	1	
AOC3-SB7-2.0	1337					X			2	1	1	
AOC5-SB14-2.5	1643					X			1	1		
AOC5-SB15-3.5	1716					X			1	1		
AOC1-SB12-0.75	1039					X			1	1		
AOC1-SB11-3.5	1017					X			1	1		
AOC5-SB12-2.2	1439					X			1	1		
AOC4-SB6-2.5	1410					X			1	1		
AOC3-SB4-2.5	1141					X			1	1		
AOC3-SB8-1.5	1353					X			1	1		
AOC1-SB13-0.75	1111					X			1	1		
SS12-SB28-3.5	1541					X			1	1		
SS12-SB29-3.5	1602					X			1	1		Note: Sample
AOC5-SB16-2.0	1729					X			1	1		AOC5-SB13-2.5=
AOC5-SB13-2.5	1507					X			1	1		Matrix Spike,
TB-9	—							X	2		2	Matrix Spike Duplicate

RELINQUISHED BY (signature)	DATE/TIME	TOTAL NUMBER OF COTNAINERS	21	RECEIVED FOR LAB BY (Signature)	DATE/TIME
[signature]	7/21/94 1801				
RECEIVED BY (signature)	DATE/TIME	RELINQUISHED BY (signature)	DATE/TIME	CONDITION OF CONTENTS	TEMPERATURE UPON RECEIPT
RELINQUISHED BY (signature)	DATE/TIME	RECEIVED BY (signature)	DATE/TIME	REMARKS	
RECEIVED BY (signature)	DATE/TIME	METHOD OF SHIPMENT	AIRBILL NO.		

Copy Pink Copy

TRA TECH, INC.
15400 NE 90th, Suite 100
Redmond, Washington 98052
(206) 883-1912
FAX (206) 881-6997

CHAIN OF CUSTODY

DOCUMENT 1 of 1

PROJECT NAME Kotzebue LRRS RI | PROJECT NO. 9676

SAMPLERS: (signature) [signature] [signature]

Tt Contact: Rick Osgood

SAMPLE ID	TIME	DATE	MEDIA: Air	Surface Water	Ground Water	Soil	Sediment	Lab H2O	NUMBER OF CONTAINERS	ANALYSIS: AK102	AK101	REMARKS
AOC3-EB1	1400	7/21/94						X	4	1	3	Equipment Blank
TB-56	~~1400~~	7/21/94						X	2		2	Trip Blank
KS	NA											
									6			

Cooler #553

RELINQUISHED BY (signature) [signature]	DATE/TIME 7/21/94 1746	TOTAL NUMBER OF COTNAINERS	6	RECEIVED FOR LAB BY (Signature)	DATE/TIME
RECEIVED BY (signature)	DATE/TIME	RELINQUISHED BY (signature)	DATE/TIME	CONDITION OF CONTENTS	TEMPERATURE UPON RECEIPT
RELINQUISHED BY (signature)	DATE/TIME	RECEIVED BY (signature)	DATE/TIME	REMARKS	
RECEIVED BY (signature)	DATE/TIME	METHOD OF SHIPMENT	AIRBILL NO.		

Copy Pink Copy

TETRA TECH, INC.
15400 NE 90th, Suite 100
Redmond, Washington 98052
(206) 883-1912
FAX (206) 881-6997

CHAIN OF CUSTODY

DOCUMENT 1 of 1

PROJECT NAME: Kotzebue LRRS RI | PROJECT NO.: 9676

SAMPLERS: (signature) Kent Sih

Tt Contact: Rick Osgood

Cooler # 335

SAMPLE ID	TIME	DATE	MEDIA: Air	Surface Water	Ground Water	Soil	Sediment	Lab H2O	NUMBER OF CONTAINERS	ANALYSIS: SW8260	SW8270	SW8081	AK102	SW6010/7421	AK102	REMARKS
AOC6-SD1	1730	7/20/94					X		5	1	1	1	1	1		Metals include lead (Pb).
AOC6-SB6-1.5	1750					X			1				1			
AOC11-SB3-1.0	1455					X			5	1	1		1	1	1	
AOC11-SB1-1.0	1450					X			5	1	1		1	1	1	
AOC11-SB2-1.5	1459					X			5	1	1		1	1	1	
AOC11-SB5-2.0	1610					X			2				1		1	
AOC11-SS1	1570					X			2				1		1	
AOC11-SB4-1.5	1545					X			2				1		1	
AOC11-SS2	1445					X			2				1		1	
AOC11-SB6-1.0	1435					X			2				1		1	
TB-47	NA							X	2	2						Trip Blank

RELINQUISHED BY (signature): Kent Sih	DATE/TIME: 7/20/94 1845	TOTAL NUMBER OF COTNAINERS: 33		RECEIVED FOR LAB BY (Signature)	DATE/TIME
RECEIVED BY (signature)	DATE/TIME	RELINQUISHED BY (signature)	DATE/TIME	CONDITION OF CONTENTS	TEMPERATURE UPON RECEIPT
RELINQUISHED BY (signature)	DATE/TIME	RECEIVED BY (signature)	DATE/TIME	REMARKS	
RECEIVED BY (signature)	DATE/TIME	METHOD OF SHIPMENT	AIRBILL NO.		

Pink Copy - Field File Copy

TETRA TECH, INC.
15400 NE 90th, Suite 100
Redmond, Washington 98052
(206) 883-1912
FAX (206) 881-6997

CHAIN OF CUSTODY

DOCUMENT 1 of 1

PROJECT NAME Kotzebue LRRS RI | PROJECT NO. 9676

SAMPLERS: (signature)

Tt Contact: Rick Osgood

SAMPLE ID	TIME	DATE	MEDIA: Air	Surface Water	Ground Water	Soil	Sediment	Lab QC	NUMBER OF CONTAINERS	ANALYSIS: SW 8260	SW 8270	SW8081	AK 102 (Extra Liter)	SW 6010/7421	REMARKS: Cooler #367
AOC6-SW1	1715	7/20/94		X					8	3	1	1	1	1	Metals include full suite by SW 6010 plus Lead (Pb) by SW 7421.
TB-706	NA	7/20/94						X	2	2					Trip Blank

RELINQUISHED BY (signature)	DATE/TIME 7/20/94 1840	TOTAL NUMBER OF COTNAINERS 10		RECEIVED FOR LAB BY (Signature)	DATE/TIME
RECEIVED BY (signature)	DATE/TIME	RELINQUISHED BY (signature)	DATE/TIME	CONDITION OF CONTENTS	TEMPERATURE UPON RECEIPT
RELINQUISHED BY (signature)	DATE/TIME	RECEIVED BY (signature)	DATE/TIME	REMARKS	
RECEIVED BY (signature)	DATE/TIME	METHOD OF SHIPMENT	AIRBILL NO.		

Copy Pink Copy

TRA TECH, INC.
15400 NE 90th, Suite 100
Redmond, Washington 98052
(206) 883-1912
FAX (206) 881-6997

CHAIN OF CUSTODY

DOCUMENT 1 of 1

PROJECT NAME: Kotzebue LRRS RI/FS | PROJECT NO: 9676

SAMPLERS: (signature)

Tt Contact: Rick Osgood

Cooler #348

SAMPLE ID	TIME	DATE	MEDIA: Air	Surface Water	Ground Water	Soil	Sediment	Lab H2O	NUMBER OF CONTAINERS	ANALYSIS: SW 8260	SW 6010 Total	SW 6010 Dissolved	SW 7421 (Pb)	SW 7470/7471 (Hg)	REMARKS
ST05-MW7-01	1040	7/18/94			X				3	3					Note: SW6010 Metals includes full suite.
ST05-MW8-01	1310				X				3	3					
ST05-MW9-01	1420				X				3	3					
ST05-MW3-01	1145				X				3	3					
SS02-MW2-01	1615				X				3	3	1	1	✓	✓	
SS02-MW3-01	1515				X				5	3	1	1	✓	✓	
SS02-MW4-01	0925				X				5	3	1	1	✓	✓	
SS02-EB1	1000							X	3	3					
TB-36	NA							X	2	2					Trip Blank
ST05-AB3	1430							X	2	2					Ambient Condition Blank

RELINQUISHED BY (signature)	DATE/TIME 7/18/94 1720	TOTAL NUMBER OF COTNAINERS 34		RECEIVED FOR LAB BY (Signature)	DATE/TIME
RECEIVED BY (signature)	DATE/TIME	RELINQUISHED BY (signature)	DATE/TIME	CONDITION OF CONTENTS	TEMPERATURE UPON RECEIPT
RELINQUISHED BY (signature)	DATE/TIME	RECEIVED BY (signature)	DATE/TIME	REMARKS	
RECEIVED BY (signature)	DATE/TIME	METHOD OF SHIPMENT	AIRBILL NO.		

opy Pink Copy

TRA TECH, INC.
15400 NE 90th, Suite 100
Redmond, Washington 98052
(206) 883-1912
FAX (206) 881-6997

CHAIN OF CUSTODY

DOCUMENT 1 of 1

PROJECT NAME Kotzebue LRRS RI/FS | PROJECT NO. 9676

SAMPLERS: (signature) [signature] P. Osgood

Tt Contact: Rick Osgood

SAMPLE ID	TIME	DATE	MEDIA: Air	Surface Water	Ground Water	Soil	Sediment			NUMBER OF CONTAINERS	ANALYSIS: SW 8270	SW 8081	AK 102	EPA 9060 (Extra Liter)						REMARKS
√ SS02-MW3-01	1515	7/18/94			X					4	1	1	1	1						Cooler #329
~~SW0-KS~~																				
√ SS02-MW2-01	1615	7/18/94			X					2		1			1					
√ SS02-MW4-01	0925	7/18/94			X					4	1	1	1		1					

RELINQUISHED BY (signature) [signature]	DATE/TIME 7/18/94 1737	TOTAL NUMBER OF COTNAINERS	10	RECEIVED FOR LAB BY (Signature)	DATE/TIME
RECEIVED BY (signature)	DATE/TIME	RELINQUISHED BY (signature)	DATE/TIME	CONDITION OF CONTENTS	TEMPERATURE UPON RECEIPT
RELINQUISHED BY (signature)	DATE/TIME	RECEIVED BY (signature)	DATE/TIME	REMARKS	
RECEIVED BY (signature)	DATE/TIME	METHOD OF SHIPMENT	AIRBILL NO.		

Copy Pink Copy

TETRA TECH, INC.
15400 NE 90th, Suite 100
Redmond, Washington 98052
(206) 883-1912
FAX (206) 881-6997

CHAIN OF CUSTODY

DOCUMENT 1 of 1

PROJECT NAME: Kotzebue LRRS RI/FS
PROJECT NO.: 9676
SAMPLERS: (signature) [signature] Rick Osgood
Tt Contact: Rick Osgood

Cooler 3Ø6

SAMPLE ID	TIME	DATE	MEDIA: Air	Surface Water	Ground Water	Soil	Sediment			NUMBER OF CONTAINERS	ANALYSIS: SW 827Ø	AK 1Ø2	EPA 9Ø6Ø	SW 6Ø1Ø	(Extra Liter)						REMARKS
ST05-MW8-Ø1	131Ø	7/18/94			X					5	1	1	1	1	1						Note: SW6Ø1Ø
ST05-MW3-Ø1	1145	7/18/94			X					5	1	1	1	1	1						Metals includes:
ST05-MW9-Ø1	142Ø	7/18/94			X					5	1	1	1	1	1						Fe, Mg, Ca, Na, K

[signature]

RELINQUISHED BY (signature)	DATE/TIME	TOTAL NUMBER OF COTNAINERS	15	RECEIVED FOR LAB BY (Signature)	DATE/TIME
[signature]	7/18/94 17Ø3				
RECEIVED BY (signature)	DATE/TIME	RELINQUISHED BY (signature)	DATE/TIME	CONDITION OF CONTENTS	TEMPERATURE UPON RECEIPT
RELINQUISHED BY (signature)	DATE/TIME	RECEIVED BY (signature)	DATE/TIME	REMARKS	
RECEIVED BY (signature)	DATE/TIME	METHOD OF SHIPMENT	AIRBILL NO.		

Copy Pink Copy

TRA TECH, INC.
15400 NE 90th, Suite 100
Redmond, Washington 98052
(206) 883-1912
FAX (206) 881-6997

CHAIN OF CUSTODY

DOCUMENT 1 of 1

PROJECT NAME: Kotzebue LRRS RI/FS | PROJECT NO.: 9676

SAMPLERS: (signature)

Tt Contact: Rick Osgood

Cooler # 316

SAMPLE ID	TIME	DATE	MEDIA: Air	Surface Water	Ground Water	Soil	Sediment	Lab H2O	NUMBER OF CONTAINERS	ANALYSIS: SW8270	AK 102	EPA 9060	SW 6010 (Extra Liter)	SW 8081	REMARKS
SS05-MW7-01	1040	7/18/94			X				5	1	1	1	1	1	Note: SW6010 Metals Includes; Fe, Mg, Ca, Na, K
~~SS02-EB1~~	~~1000~~	~~7/18/94~~			~~X~~		~~S~~								
SS02-EB1	1000	7/18/94						X	6	1	1	1	1	1	
SS02-MW2-01	1615	7/18/94			X				2	1	1				

RELINQUISHED BY (signature)	DATE/TIME 7/18/94 1711	TOTAL NUMBER OF COTNAINERS	13	RECEIVED FOR LAB BY (Signature)	DATE/TIME
RECEIVED BY (signature)	DATE/TIME	RELINQUISHED BY (signature)	DATE/TIME	CONDITION OF CONTENTS	TEMPERATURE UPON RECEIPT
RELINQUISHED BY (signature)	DATE/TIME	RECEIVED BY (signature)	DATE/TIME	REMARKS	
RECEIVED BY (signature)	DATE/TIME	METHOD OF SHIPMENT	AIRBILL NO.		

Copy Pink Copy

TRA TECH, INC.
15400 NE 90th, Suite 100
Redmond, Washington 98052
(206) 883-1912
FAX (206) 881-6997

CHAIN OF CUSTODY

DOCUMENT 1 of 1

PROJECT NAME: Kotzebue LRRS RI/FS | PROJECT NO.: 2676

SAMPLERS: *(signature)*

Tt Contact: Rick Osgood

SAMPLE ID	TIME	DATE	MEDIA: Air	Surface Water	Ground Water	Soil	Sediment	Product	NUMBER OF CONTAINERS	ANALYSIS: See Remarks	REMARKS
Diesel Fuel	1830	7/17/94						X	1	1	Artic Grade Diesel for Analytical Standard

RELINQUISHED BY *(signature)*	DATE/TIME 7/17/94 1850	TOTAL NUMBER OF COTNAINERS	1	RECEIVED FOR LAB BY *(Signature)*	DATE/TIME
RECEIVED BY *(signature)*	DATE/TIME	RELINQUISHED BY *(signature)*	DATE/TIME	CONDITION OF CONTENTS	TEMPERATURE UPON RECEIPT
RELINQUISHED BY *(signature)*	DATE/TIME	RECEIVED BY *(signature)*	DATE/TIME	REMARKS	
RECEIVED BY *(signature)*	DATE/TIME	METHOD OF SHIPMENT	AIRBILL NO.		

Copy Pink Copy

TETRA TECH, INC.
15400 NE 90th, Suite 100
Redmond, Washington 98052
(206) 883-1912
FAX (206) 881-6997

CHAIN OF CUSTODY

DOCUMENT 1 of 1

PROJECT NAME: Kotzebue LRRS RI/FS
PROJECT NO.: 9676
SAMPLERS: (signature) [signature] [signature]
Tt Contact: Rick Osgood

SAMPLE ID	TIME	DATE	Air	Surface Water	Ground Water	Soil	Sediment	Lab H_2O	NUMBER OF CONTAINERS	SW 8270	AK 102	~~SW 6010~~ KS	~~EPA 9060~~ KS	Extra Liter	SW 8260	REMARKS
ST05-MW2-01	1540	7/17/94			X				1	1						~~Metals include~~
ST05-MW1-01	1035	7/17/94			X				6	1	1			1	3	~~Fe, Mg, K, Na, Ca~~
ST05-MW10-01	1635	7/17/94			X				6	1	1			1	3	KS
ST05-MW4-01	1145	7/17/94			X				KS 9 ~~12~~						~~12~~ 9 KS	MS, MSD
ST05-MW2-01	1540	7/17/94			X				3						3	
ST05-MW5-01	1315	7/17/94			X				3						3	
ST05-MW6-01	1425	7/17/94			X				3						3	
TB-40	NA	7/17/94						X	2						2	Trip Blank

RELINQUISHED BY (signature)	DATE/TIME	TOTAL NUMBER OF COTNAINERS		RECEIVED FOR LAB BY (Signature)	DATE/TIME
[signature]	7/17/94 1759	34			
RECEIVED BY (signature)	DATE/TIME	RELINQUISHED BY (signature)	DATE/TIME	CONDITION OF CONTENTS	TEMPERATURE UPON RECEIPT
RELINQUISHED BY (signature)	DATE/TIME	RECEIVED BY (signature)	DATE/TIME	REMARKS	
RECEIVED BY (signature)	DATE/TIME	METHOD OF SHIPMENT	AIRBILL NO.		

Copy Pink Copy

TRA TECH, INC.
15400 NE 90th, Suite 100
Redmond, Washington 98052
(206) 883-1912
FAX (206) 881-6997

CHAIN OF CUSTODY

DOCUMENT 1 of 1

PROJECT NAME: Kotzebue LRRS RI/FS
PROJECT NO.: 9676
SAMPLERS: (signature) Kurt Schnurr, Rick Osgood
Tt Contact: Rick Osgood

SAMPLE ID	TIME	DATE	MEDIA: Air	Surface Water	Ground Water	Soil	Sediment	NUMBER OF CONTAINERS	ANALYSIS: SW8260 (TCL)	SW8270	AK 102	SW 6010 (Extra Liter)	EPA 9060 (TOC)	REMARKS
ST05-MW4-01	1145	7/17/94			X			13	3 KS	3	3	3	1	3	Metals include Fe, Mg, Ca, Na, K by method 6010. Note: ST05-MW4-01 includes spare bottles for matrix spike & matrix spike duplicate. Also (1) spare liter, unpreserved.

RELINQUISHED BY (signature): Kurt Schnurr	DATE/TIME: 7/17/94 1730	TOTAL NUMBER OF COTNAINERS: 13		RECEIVED FOR LAB BY (Signature)	DATE/TIME
RECEIVED BY (signature)	DATE/TIME	RELINQUISHED BY (signature)	DATE/TIME	CONDITION OF CONTENTS	TEMPERATURE UPON RECEIPT
RELINQUISHED BY (signature)	DATE/TIME	RECEIVED BY (signature)	DATE/TIME	REMARKS	
RECEIVED BY (signature)	DATE/TIME	METHOD OF SHIPMENT	AIRBILL NO.		

Copy Pink Copy

TRA TECH, INC.
15400 NE 90th, Suite 100
Redmond, Washington 98052
(206) 883-1912
FAX (206) 881-6997

CHAIN OF CUSTODY

DOCUMENT 1 of 1

PROJECT NAME: Kotzebue LRRS RI/FS
PROJECT NO.: 9676
SAMPLERS: (signature) Kurt Schmidt Rick Osgood
Tt Contact: Rick Osgood

SAMPLE ID	TIME	DATE	MEDIA: Air	Surface Water	Ground Water	Soil	Sediment	NUMBER OF CONTAINERS	ANALYSIS: SW8270	AK 102	SW 6010	EPA 9060	Extra Liter	REMARKS
ST05-MW6-01	1425	7/17/94			X			5	1	1	1	1	1	Metals include Fe, Mg, Na, Ca, K by Method 6010.
ST05-MW5-01	1315	7/17/94			X			5	1	1	1	1	1	
ST05-MW2-01	1540	7/17/94			X			4		1	1	1	1	

RELINQUISHED BY (signature) Kurt Schmidt	DATE/TIME 7/17/94 1715	TOTAL NUMBER OF COTNAINERS 14		RECEIVED FOR LAB BY (Signature)	DATE/TIME
RECEIVED BY (signature)	DATE/TIME	RELINQUISHED BY (signature)	DATE/TIME	CONDITION OF CONTENTS	TEMPERATURE UPON RECEIPT
RELINQUISHED BY (signature)	DATE/TIME	RECEIVED BY (signature)	DATE/TIME	REMARKS	
RECEIVED BY (signature)	DATE/TIME	METHOD OF SHIPMENT	AIRBILL NO.		

Copy Pink Copy -

TETRA TECH, INC.
15400 NE 90th, Suite 100
Redmond, Washington 98052
(206) 883-1912
FAX (206) 881-6997

CHAIN OF CUSTODY

DOCUMENT _____

PROJECT NAME: Kotzebue LRRS RI/FS
PROJECT NO.: 9676
SAMPLERS: (signature) Rick E. Osgood / Curt [illegible]
Tt Contact: Rick Osgood

Cooler #388

SAMPLE ID	TIME	DATE	MEDIA: Air	Surface Water	Ground Water	Soil	Sediment	Water		NUMBER OF CONTAINERS	ANALYSIS: TPH (AK 102)	VOCs (SW 8260)	SVOCs (SW 8270)	PEST./PCBs (SW 8080)							REMARKS
Background-MW1-01	1245	7/14/94			X					18	3	9	3	3							MS/MSD ~~+/- Hive [illegible]~~ pwo
SS02-MW1-01	1520	7/14/94			X					3		3									
SS02-AB-01	1520	7/14/94						X		2		2									
TB-26	1520	7/14/94						X		2		2									

RELINQUISHED BY (signature)	DATE/TIME	TOTAL NUMBER OF COTNAINERS	25	RECEIVED FOR LAB BY (Signature)	DATE/TIME
Rick E. Osgood	7/14/94/1805				
RECEIVED BY (signature)	DATE/TIME	RELINQUISHED BY (signature)	DATE/TIME	CONDITION OF CONTENTS	TEMPERATURE UPON RECEIPT
RELINQUISHED BY (signature)	DATE/TIME	RECEIVED BY (signature)	DATE/TIME	REMARKS	
RECEIVED BY (signature)	DATE/TIME	METHOD OF SHIPMENT	AIRBILL NO.		

Copy Pink Copy

TETRA TECH, INC.
15400 NE 90th, Suite 100
Redmond, Washington 98052
(206) 883-1912
FAX (206) 881-6997

CHAIN OF CUSTODY

DOCUMENT 1 of 1

PROJECT NAME: Kotzebue LRRS RI/FS
PROJECT NO.: 9676-13
SAMPLERS: (signature) Curt DeGazio / Rick Osgood
Tt Contact: Rick Osgood

SAMPLE ID	TIME	DATE	MEDIA: Air	Surface Water	Ground Water	Soil	Sediment	Type II Water		NUMBER OF CONTAINERS	ANALYSIS: TPH (AK102)	SVOC (SW8270)	Pesticides/PCBs (SW8081)	Additional Sample Volume	Total Metals	Dissolved Metals	6010, 7000 series lead & mercury				REMARKS
SS02-MW1-01	1520	7-14-94			X					6	X	X	X	X	X	X					
EB (Metals Filter)	1700	7-14-94						X		1											Equipment/Filter Blank
Background-MW1-01	1245	7-14-94			X					6					X	X					MS/MSD

Note: for total and dissolved metals run 6010 and 7000 series lead and mercury

RELINQUISHED BY (signature)	DATE/TIME	TOTAL NUMBER OF COTNAINERS	13	RECEIVED FOR LAB BY (Signature)	DATE/TIME
Curt DeGazio	7-14-94/1815				
RECEIVED BY (signature)	DATE/TIME	RELINQUISHED BY (signature)	DATE/TIME	CONDITION OF CONTENTS	TEMPERATURE UPON RECEIPT
RELINQUISHED BY (signature)	DATE/TIME	RECEIVED BY (signature)	DATE/TIME	REMARKS * Additional sample volume not preserved. Metals & TPH samples have been preserved	
RECEIVED BY (signature)	DATE/TIME	METHOD OF SHIPMENT	AIRBILL NO.		

Copy Pink Copy

TRA TECH, INC.
15400 NE 90th, Suite 100
Redmond, Washington 98052
(206) 883-1912
FAX (206) 881-6997

CHAIN OF CUSTODY

DOCUMENT 1 of 1

PROJECT NAME: Kotzebue LRRS RI/FS
PROJECT NO.: 9676-13
SAMPLERS: (signature) David R. Hoen
Tt Contact: Rick Osgood

SAMPLE ID	TIME	DATE	MEDIA: Air	Surface Water	Ground Water	Soil	Sediment	Water	NUMBER OF CONTAINERS	ANALYSIS: 8081 Pest + PCB	AK102 Diesel	8260	8270	REMARKS
STO5-551	0930	7-13-94				X			1	X				Cooler # 366
STO5-552	1000					X			1	X				
STO5-553	1030					X			1	X				
AOC10-SB1	1830	7/11/94				X			1		X			RE Sample
SS12-SB27-7.5	1727	7-13-94				X			1			X		
SS12-SB27-7.8	1727					X			2		X		X	
TB-12								X	2			X		
STO5-SB22-8.5	1033					X			1		X			
STO5-SB23-8.5	1323					X			1		X			
STO5-SB24-8.0	1441					X			1		X			

RELINQUISHED BY (signature): David R. Hoen	DATE/TIME: 7/13/94 18:30	TOTAL NUMBER OF COTNAINERS: 12		RECEIVED FOR LAB BY (Signature)	DATE/TIME
RECEIVED BY (signature)	DATE/TIME	RELINQUISHED BY (signature)	DATE/TIME	CONDITION OF CONTENTS	TEMPERATURE UPON RECEIPT
RELINQUISHED BY (signature)	DATE/TIME	RECEIVED BY (signature)	DATE/TIME	REMARKS	
RECEIVED BY (signature)	DATE/TIME	METHOD OF SHIPMENT	AIRBILL NO.		

Copy Pink Copy -

TETRA TECH, INC.
15400 NE 90th, Suite 100
Redmond, Washington 98052
(206) 883-1912
FAX (206) 881-6997

CHAIN OF CUSTODY

DOCUMENT 1651

PROJECT NAME: Kotzebue LRRS RI/FS
PROJECT NO.: 9676-13
SAMPLERS: (signature) David R. Horn
Tt Contact: Rick Osgood
Coolon # 343

SAMPLE ID	TIME	DATE	MEDIA: Air	Surface Water	Ground Water	Soil	Sediment	Water	NUMBER OF CONTAINERS	ANALYSIS: Total Metals (6010) Fe, Mn, Ca, Mg	TOC (9060)	8260	8270	AK102	Total Metals (6010)	Total Metals (7421) Lead	Dis. Metals (6010)	Dis. Metals (7421) Lead	8081 Pest + PCB	REMARKS
SS12-SW1-01	1100	7-13-94		X					1	X										
SS12-SW2-01	1110			X					1	X										
SS12-SW3-01	1050			X					1	X										
SS12-SW4-01	1040			X					1	X										
~~Background-02-01~~	~~1090~~			~~X~~					~~1~~	~~X~~										
Background-SW2-01	1030			X					2	X	X									
TB34								X	2			X								
ADC10-SW1	1900	7-11-94							8			X	X	X	X	X	X	X	X	PE Sample
STD5-EB3	1800	7-9-94						X	6			X	X	X					X	

RELINQUISHED BY (signature): David R. Horn	DATE/TIME: 9/17/94	TOTAL NUMBER OF COTNAINERS: 22		RECEIVED FOR LAB BY (Signature)	DATE/TIME
RECEIVED BY (signature)	DATE/TIME	RELINQUISHED BY (signature)	DATE/TIME	CONDITION OF CONTENTS	TEMPERATURE UPON RECEIPT
RELINQUISHED BY (signature)	DATE/TIME	RECEIVED BY (signature)	DATE/TIME	REMARKS	
RECEIVED BY (signature)	DATE/TIME	METHOD OF SHIPMENT	AIRBILL NO.		

Distribution: Original - Lab Copy; Yellow copy - Final Tetra Tech Copy; Pink Copy - Field File Copy

TETRA TECH, INC.
15400 NE 90th, Suite 100
Redmond, Washington 98052
(206) 883-1912
FAX (206) 881-6997

CHAIN OF CUSTODY

DOCUMENT 1 of 2

PROJECT NAME: Kotzebue LRRS | PROJECT NO.: 9676-13

SAMPLERS: (signature) [signature] Rick Osgood

Tt Contact: Rick Osgood

Cooler # 311

SAMPLE ID	TIME	DATE	MEDIA: Air	Surface Water	Ground Water	Soil	Sediment	Lab H2O	NUMBER OF CONTAINERS	ANALYSIS: SW 8260	SW 8270	AK 102	Analysis REMARKS / Conc.
STQ5-SB17-4.5	1056	7/11/94				X			1	X			VOCs – High
STQ5-SB20-7.0	1551	7/12/94				X			1	X			VOCs – Mod.
STQ5-SB17-6.5	1111	7/11/94				X			1		X		SVOCs – Mod
STQ5-SB20-6.0	1551	7/12/94				X			1		X		SVOCs – Low to Mod
STQ5-SB17-5.0	1056	7/11/94				X			1			X	TPH – High
STQ5-SB21-8.5	1713	7/12/94				X			1			X	TPH – High
STQ5-SB17-10.0	1347	7/11/94				X			1			X	TPH – Low
STQ5-SB18-8.5	1533	7/11/94				X			1			X	TPH – Very Low
STQ5-SB20-6.7	1551	7/12/94				X			1			X	TPH – Mod
STQ5-SB19-6.0	1117	7/12/94				X			1			X	TPH – Low
TB-15	—	7/12/94						X	2	X			VOCs – Very Low (Trip Blank)

[signature] 7/12/94

RELINQUISHED BY (signature): [signature]	DATE/TIME: 7/12/94 1837	TOTAL NUMBER OF COTNAINERS: 12		RECEIVED FOR LAB BY (Signature)	DATE/TIME
RECEIVED BY (signature)	DATE/TIME	RELINQUISHED BY (signature)	DATE/TIME	CONDITION OF CONTENTS	TEMPERATURE UPON RECEIPT
RELINQUISHED BY (signature)	DATE/TIME	RECEIVED BY (signature)	DATE/TIME	REMARKS	
RECEIVED BY (signature)	DATE/TIME	METHOD OF SHIPMENT	AIRBILL NO.		

Copy Pink Copy

TRA TECH, INC.
15400 NE 90th, Suite 100
Redmond, Washington 98052
(206) 883-1912
FAX (206) 881-6997

CHAIN OF CUSTODY

DOCUMENT Pg 2 of 2

PROJECT NAME	PROJECT NO.
Kotzebue LRRS	9676-13

SAMPLERS: *(signature)*

Tt Contact: Rick Osgood

SAMPLE ID	TIME	DATE	MEDIA: Air	Surface Water	Ground Water	Soil	Sediment	NUMBER OF CONTAINERS	ANALYSIS: SW8260	SW8270	SW8081	SW6010 + 7421 mod. Lead	AK102	AK101	TOC 9060	REMARKS
AOC-4-SB2-1.5	1645	7/12/94				X		6	X	X	X	X	X	X		cooler # 8311
AOC-4-SB3-1.0	1700	7/12/94				X		5	X	X	X		X	X		
AOC-4-SB4	1715	7/12/94				X		6	X	X	X	X	X	X		HIGH PID READINGS
AOC-4-SB5	1730	7/12/94				X		5	X	X	X		X	X		HIGH PID READINGS
SS12-SW1-01	1115	7/11/94		X				1							X	
SS12-SW3-01	1430	7/11/94		X				1							X	
SS12-SW4-01	1530	7/11/94		X				1							X	
SS12-SD4	1530	7/12/94				X		4	X	X	X		X			

RELINQUISHED BY *(signature)*	DATE/TIME 1840 7/12/94	TOTAL NUMBER OF COTNAINERS	29	RECEIVED FOR LAB BY *(Signature)*	DATE/TIME
RECEIVED BY *(signature)*	DATE/TIME	RELINQUISHED BY *(signature)*	DATE/TIME	CONDITION OF CONTENTS	TEMPERATURE UPON RECEIPT
RELINQUISHED BY *(signature)*	DATE/TIME	RECEIVED BY *(signature)*	DATE/TIME	REMARKS 5 DAY TAT on AK102	
RECEIVED BY *(signature)*	DATE/TIME	METHOD OF SHIPMENT	AIRBILL NO.	NOTE: Different Sample DATES for	

Copy Pink Copy

TRA TECH, INC.
15400 NE 90th, Suite 100
Redmond, Washington 98052
(206) 883-1912
FAX (206) 881-6997

CHAIN OF CUSTODY

DOCUMENT 1/1

PROJECT NAME Kotzebue LRRS | PROJECT NO. 9676

SAMPLERS: (signature) Kurt Blanchard / Rick Osgood

Tt Contact: Rick Osgood

SAMPLE ID	TIME	DATE	MEDIA: Air	Surface Water	Ground Water	Soil	Sediment	Lab H2O	NUMBER OF CONTAINERS	ANALYSIS: SW 8260	AK 102	SW 8270	Analysis REMARKS (Expected Conc.)
ST05-SB15-5.0	1127	7/10/94				X			1	X			VOCs - Low
ST05-SB15-5.5	1127	7/10/94				X			1		X		TPH - Low
ST05-SB15-6.0	1147	7/10/94				X			1			X	SVOCs - Low
ST05-SB16-4.0	1438	7/10/94				X			1	X			VOCs - High
ST05-SB16-5.5	1445	7/10/94				X			1		X		TPH - High
ST05-SB16-5.5	1445	7/10/94				X			1			X	SVOCs - High
ST05-SB16-9.0	1529	7/10/94				X			1		X		TPH - High
TB-5	1852	7/10/94						X	2	X			VOCs - Trip Blank
ST05-SB13-6.0	1013	7/9/94				X			1	X			VOCs - High
ST05-SB13-7.0	1013	7/9/94				X			1		X		TPH - Hot!
ST05-SB13-5.5	1006	7/9/94				X			1			X	SVOCs - Moderate
ST05-SB13-12.8	1126	7/9/94				X			1		X		TPH - Low
ST05-SB14-5.5	1409	7/9/94				X			1	X			VOCs - High
ST05-SB14-7.0	1422	7/9/94				X			1		X		TPH - High
ST05-SB14-8.5	1430	7/9/94				X			1			X	SVOCs - High
ST05-SB14-9.5	1447	7/9/94				X			1	X			VOCs - High?
ST05-SB14-11.0	1454	7/9/94				X			1		X		TPH - High
ST05-SB14-12.5	1507	7/9/94				X			1			X	SVOCs - Moderate
ST05-SB14-13.0	1521	7/9/94				X			1		X		TPH - Low

RELINQUISHED BY (signature) Kurt Blanchard	DATE/TIME 7/10/94 1709	TOTAL NUMBER OF COTNAINERS 20		RECEIVED FOR LAB BY (Signature)	DATE/TIME
RECEIVED BY (signature)	DATE/TIME	RELINQUISHED BY (signature)	DATE/TIME	CONDITION OF CONTENTS	TEMPERATURE UPON RECEIPT
RELINQUISHED BY (signature)	DATE/TIME	RECEIVED BY (signature)	DATE/TIME	REMARKS	
RECEIVED BY (signature)	DATE/TIME	METHOD OF SHIPMENT	AIRBILL NO.		

Copy Pink Copy

TRA TECH, INC.
15400 NE 90th, Suite 100
Redmond, Washington 98052
(206) 883-1912
FAX (206) 881-6997

CHAIN OF CUSTODY

DOCUMENT 16-11

PROJECT NAME Kokanee LRAS RI/FS | PROJECT NO. 7676-13

SAMPLERS: *(signature)*

Tt Contact: Rick Osgood

Cooler # 327

	SAMPLE ID	TIME	DATE	MEDIA: Air	Surface Water	Ground Water	Soil	Sediment	Water	NUMBER OF CONTAINERS	ANALYSIS: AK102	8260	8270	8081 Pesticides	8082 PCB	Dis. Metals SW 6010	Dis. Metals SW 7421	Dis. Metals SW 7471	total SW6010+7421	total SW7471	REMARKS
√	5502-SW1-01/MS	1530	7-10-14		X					7	X	X	X	X	X	X	X	X			Matrix Spike
√	5502-SW1-01/MSD	1530	7/10/14		X					7	X	X	X	X	X	X	X	X			Matrix Spike Duplicate
√	TB-42								X	2		X									
√	BACKGROUND-CB2	1820	7/10/14						X	7	X	X	X	X	X				X	X	

RELINQUISHED BY *(signature)* Rick Osgood	DATE/TIME 7/10/14/1900	TOTAL NUMBER OF COTNAINERS 23	RECEIVED FOR LAB BY *(Signature)* / DATE/TIME
RECEIVED BY *(signature)* / DATE/TIME	RELINQUISHED BY *(signature)* / DATE/TIME		CONDITION OF CONTENTS / TEMPERATURE UPON RECEIPT
RELINQUISHED BY *(signature)* / DATE/TIME	RECEIVED BY *(signature)* / DATE/TIME		REMARKS
RECEIVED BY *(signature)* / DATE/TIME	METHOD OF SHIPMENT / AIRBILL NO.		

Copy Pink Copy

TRA TECH, INC.
15400 NE 90th, Suite 100
Redmond, Washington 98052
(206) 883-1912
FAX (206) 881-6997

CHAIN OF CUSTODY

DOCUMENT 1 of 1

PROJECT NAME: Kotzebue LRPS RI/FS
PROJECT NO: 9676-13
SAMPLERS: (signature) David R. Hoar
Tt Contact: Rick Osgood

SAMPLE ID	TIME	DATE	MEDIA: Air	Surface Water	Ground Water	Soil	Sediment	Water	NUMBER OF CONTAINERS	ANALYSIS: AK 102	8260	8270	8081 Pesticides	8081 PCBs	Total Metals SW6010	Total Metals SW7471	Trimethyltin	AK101		REMARKS
AOC10-SD1	1500	7/7/94					X		5	X	X	X	X	X	X	X				Septic Tank Sludge
BACKGROUND-SS4-01	1130	7/10/94				X			6		X	X	X	X	X	X	X	X		
BACKGROUND-SD4-01	1130	7/10/94					X		5	X	X	X	X	X	X	X	X			
BACKGROUND-SS1A-01	1410	7/10/94				X			5	X	X	X	X	X	X	X	X			
BACKGROUND-SS1B-01	1420	7/10/94				X			5	X	X	X	X	X	X	X	X			
BACKGROUND-SS1C-01	1425	7/11/94				X			5	X	X	X	X	X	X	X	X			
TB-13	1990	7/10/94						X	2		X									

Cooler # 361

RELINQUISHED BY (signature)	DATE/TIME	TOTAL NUMBER OF COTNAINERS	33	RECEIVED FOR LAB BY (Signature)	DATE/TIME
David R Hoar	7/9/94 17:20				
RECEIVED BY (signature)	DATE/TIME	RELINQUISHED BY (signature)	DATE/TIME	CONDITION OF CONTENTS	TEMPERATURE UPON RECEIPT
RELINQUISHED BY (signature)	DATE/TIME	RECEIVED BY (signature)	DATE/TIME	REMARKS: 5 day TAT for AK 102	
RECEIVED BY (signature)	DATE/TIME	METHOD OF SHIPMENT	AIRBILL NO.		

Pink Copy - Field File Copy

TETRA TECH, INC.
15400 NE 90th, Suite 100
Redmond, Washington 98052
(206) 883-1912
FAX (206) 881-6997

CHAIN OF CUSTODY

DOCUMENT 1 of 1

PROJECT NAME	PROJECT NO.
Kotzebue LIRRS	7676.03

SAMPLERS: *(signature)*

Tt Contact: Rick OSGOOD

SAMPLE ID	TIME	DATE	MEDIA: Air	Surface Water	Ground Water	Soil	Sediment	Waste	NUMBER OF CONTAINERS	ANALYSIS: SW8260	SW8270	SW8081 PCB+ Pesticides	SW6010 Dissolved	SW7421 Dissolved	SW7470/71 Dissolved	AK102	SW6010 Total	SW7421 Total	SW7470/71 Total	REMARKS
BACKGROUND-SW4-01	1130	7/10/04		X					8	X	X	X	X	X	X	X	X	X	X	
TB41		7/10/04						X	2	X										
STO5-SW1-01	1545	7/10/04		X					3	X										
STO5-SW2-01	1550	7/10/04		X					3	X										
STO5-SW3-01	1600	7/10/04		X					3	X										
STO5-SW4-01	1615	7/10/04		X					3	X										
SS02-SW1-01	1530	7/10/04		X					7	X	X	X	X	X	X	X				

Cooler # 336

RELINQUISHED BY *(signature)*	DATE/TIME	TOTAL NUMBER OF COTNAINERS	29	RECEIVED FOR LAB BY *(Signature)*	DATE/TIME
RECEIVED BY *(signature)*	DATE/TIME	RELINQUISHED BY *(signature)*	DATE/TIME	CONDITION OF CONTENTS	TEMPERATURE UPON RECEIPT
RELINQUISHED BY *(signature)*	DATE/TIME	RECEIVED BY *(signature)*	DATE/TIME	REMARKS	5 DAY TURN AROUND ON AK102/STO5 SAMPLES
RECEIVED BY *(signature)*	DATE/TIME	METHOD OF SHIPMENT	AIRBILL NO.		

opy Pink Copy

TETRA TECH, INC.
15400 NE 90th, Suite 100
Redmond, Washington 98052
(206) 883-1912
FAX (206) 881-6997

CHAIN OF CUSTODY

DOCUMENT 1 of 1

PROJECT NAME: Kotzebue LRRS RI/FS | PROJECT NO.: 9676-13

SAMPLERS: (signature) Arlen Sayton

Tt Contact: Rick Osgood

Codes # 328

SAMPLE ID	TIME	DATE	MEDIA: Air	Surface Water	Ground Water	Soil	Sediment	NUMBER OF CONTAINERS	ANALYSIS: AK102	8270	Total Metals SW6010	Total Metals SW7421	Total Metals SW7471	REMARKS
SS05-SW1-01	1545	7-10-94			X			2	X	X				
SS05-SW2-01	1550				X			2	X	X				
SS05-SW3-01	1600				X			2	X	X				
SS05-SW4-01	1615				X			2	X	X				
SS02-SW1-01	1530				X			1			X	X	X	
SS02-SW1-01/MS	1530				X			1			X	X	X	Matrix Spike
SS02-SW1-01/MSD	1530				X			1			X	X	X	Matrix Spike Duplicate

RELINQUISHED BY (signature): Arlen Sayton	DATE/TIME: 7/14/94 1700	TOTAL NUMBER OF COTNAINERS: 11		RECEIVED FOR LAB BY (Signature)	DATE/TIME
RECEIVED BY (signature)	DATE/TIME	RELINQUISHED BY (signature)	DATE/TIME	CONDITION OF CONTENTS	TEMPERATURE UPON RECEIPT
RELINQUISHED BY (signature)	DATE/TIME	RECEIVED BY (signature)	DATE/TIME	REMARKS: 5 day TAT on AK102	
RECEIVED BY (signature)	DATE/TIME	METHOD OF SHIPMENT	AIRBILL NO.		

Copy Pink Copy

TRA TECH, INC.
15400 NE 90th, Suite 100
Redmond, Washington 98052
(206) 883-1912
FAX (206) 881-6997

CHAIN OF CUSTODY

DOCUMENT 1 of 1

PROJECT NAME: Kotzebue LRRS
PROJECT NO.: 7676-13
SAMPLERS: (signature) David R. Hoen
Tt Contact: Rick Osgood

SAMPLE ID	TIME	DATE	MEDIA: Air	Surface Water	Ground Water	Soil/Sediment	Sediment	Water	Soil	NUMBER OF CONTAINERS	ANALYSIS: SW8260	SW8270	SW8081 PCB's Pesticides	SW6010	SW7421 Pb	SW7470/71 Hg	AK101	AK102	REMARKS
TB29								X		2	X								Cooler # 310
Background-SS3-01	1450	7/7/04				X				6	X	X	X	X	X	X	X	X	
Background-SS3-01	1435	7/7/04				X				6	X	X	X	X	X	X	X	X	Do not analyze for AK101
Background-SS2-01	1150	7/7/04				X				6	X	X	X	X	X	X	X	X	
Background-AB2	1100	7/7/04						X		2	X								
Background-SD2-01	1135	7/7/04				X				6	X	X	X	X	X	X	X	X	Do not analyze for AK101
STDS-SB12-0.5-9.5	1456	7/7/04							X	2	X	X							
STDS-SB12-7.0	1437	7/7/04							X	2	X	X						X	# of containers = 2
STDS-AB2	1500	7/7/04						X		2	X								
STDS-SB11-0.5-7.0	1315	7/7/04							X	1								X	
STDS-SB10-0.5-7.0	1133	7/7/04							X	2		X						X	
STDS-SB16-0.5-7.0	1123	7/7/04							X	1	X								

RELINQUISHED BY (signature): David R. Hoen	DATE/TIME: 7/7/04 1800	TOTAL NUMBER OF COTNAINERS: 34		RECEIVED FOR LAB BY (Signature)	DATE/TIME
RECEIVED BY (signature)	DATE/TIME	RELINQUISHED BY (signature)	DATE/TIME	CONDITION OF CONTENTS	TEMPERATURE UPON RECEIPT
RELINQUISHED BY (signature)	DATE/TIME	RECEIVED BY (signature)	DATE/TIME	REMARKS: 5 DAY Turn Around on All AK102	
RECEIVED BY (signature)	DATE/TIME	METHOD OF SHIPMENT	AIRBILL NO.		

Copy Pink Copy

TRA TECH, INC.
15400 NE 90th, Suite 100
Redmond, Washington 98052
(206) 883-1912
FAX (206) 881-6997

CHAIN OF CUSTODY

DOCUMENT 1 of 1

PROJECT NAME: Kotzebue LRRS
PROJECT NO.: 1676-13
SAMPLERS: (signature) David R. Hoze
Tt Contact: Rick OSGOOD

SAMPLE ID	TIME	DATE	MEDIA: Air	Surface Water	Ground Water	Soil	Sediment	Water	Other	NUMBER OF CONTAINERS	ANALYSIS: SW8260	SW8270	SW2081 PCB - Aroclors	SW6010 Total	SW6010 Dissolved	SW7421 Lead - Total	SW7421 Lead - Dissolved	SW7470/71 Total Mercury	SW7470/71 Dissolved Mercury	AK102	REMARKS
TB22	1700	7/2/94						X		2	X										Cooler # 321
Background-SW2-01	1200	7/7/94		X						8	X	X	X	X	X	X	X	X	X	X	
Background-SW3-01	1440	7/7/94		X						8	X	X	X	X	X	X	X	X	X	X	
Background-SW1-01	1610	7/7/94							X	5	X	X								X	

RELINQUISHED BY (signature): David R. Hoze	DATE/TIME: 7/7/94 17:10	TOTAL NUMBER OF COTNAINERS: 23		RECEIVED FOR LAB BY (Signature)	DATE/TIME
RECEIVED BY (signature)	DATE/TIME	RELINQUISHED BY (signature)	DATE/TIME	CONDITION OF CONTENTS	TEMPERATURE UPON RECEIPT
RELINQUISHED BY (signature)	DATE/TIME	RECEIVED BY (signature)	DATE/TIME	REMARKS: 5 DAY TURNAROUND on ALL AK102	
RECEIVED BY (signature)	DATE/TIME	METHOD OF SHIPMENT	AIRBILL NO.		

Copy Pink Copy

ETRA TECH, INC.
15400 NE 90th, Suite 100
Redmond, Washington 98052
(206) 883-1912
FAX (206) 881-6997

CHAIN OF CUSTODY

DOCUMENT 1 of 1

PROJECT NAME: Kotzebue LRRS
PROJECT NO.: 9676
SAMPLERS: (signature) Allen Sexton
Tt Contact: Rick Osgood

Cooler # 333

SAMPLE ID	TIME	DATE	MEDIA: Air	Surface Water	Ground Water	Soil	Sediment	Water		NUMBER OF CONTAINERS	ANALYSIS: SW8260	SW8270	AK102 Diesel	SW8081 PCB	SW8081 Pesticides	SW6010	SW7421 Mod Lead				REMARKS
SS07-SW1-01	1010	7/6/94		X						3		X	X	X	X						For 8260's in
SS07-SW2-01	1045	7/6/94		X						3		X	X	X	X						Surface water-
SS07-SW3-01	1105	7/6/94		X						7	X	X	X	X	X	X	X				only 2 VOA's
TB17	1300	7/6/94		X				X		2	X										collected each

RELINQUISHED BY (signature)	DATE/TIME	TOTAL NUMBER OF COTNAINERS	15	RECEIVED FOR LAB BY (Signature)	DATE/TIME
Allen Sexton	2130 7/7/94				
RECEIVED BY (signature)	DATE/TIME	RELINQUISHED BY (signature)	DATE/TIME	CONDITION OF CONTENTS	TEMPERATURE UPON RECEIPT
RELINQUISHED BY (signature)	DATE/TIME	RECEIVED BY (signature)	DATE/TIME	REMARKS: 5 Day Turn Around Time on AK102	
RECEIVED BY (signature)	DATE/TIME	METHOD OF SHIPMENT	AIRBILL NO.		

Copy Pink Copy

ETRA TECH, INC.
15400 NE 90th, Suite 100
Redmond, Washington 98052
(206) 883-1912
FAX (206) 881-6997

CHAIN OF CUSTODY

DOCUMENT 1 of 1

PROJECT NAME: Kotzebue LRRS
PROJECT NO.: 7676-13
SAMPLERS: (signature) Allen Saxton
Tt Contact: Rick OSGOOD

Cooler #360

SAMPLE ID	TIME	DATE	MEDIA: Air	Surface Water	Ground Water	Soil	Sediment	Water		NUMBER OF CONTAINERS	ANALYSIS: SW8260	SW8270	~~SW6010 Lead~~	~~SW7241 Lead~~	AK102 Diesel	SW8081 Pesticides					REMARKS
SS12-SW4-01	1615	7/6/94		X						6	X	X			X	X					
SS12-SW4-01-MS	1615	7/6/94		X						6	X	X			X	X					MS
SS12-SW4-01-MSD	1615	7/6/94		X						6	X	X			X	X					MSD
TB-49	1615	7/6/94						X		2	X										

RELINQUISHED BY (signature)	DATE/TIME	TOTAL NUMBER OF COTNAINERS	20	RECEIVED FOR LAB BY (Signature)	DATE/TIME
Allen Saxton	1930 7/6/94				
RECEIVED BY (signature)	DATE/TIME	RELINQUISHED BY (signature)	DATE/TIME	CONDITION OF CONTENTS	TEMPERATURE UPON RECEIPT
RELINQUISHED BY (signature)	DATE/TIME	RECEIVED BY (signature)	DATE/TIME	REMARKS: 5 DAY TAT FOR AK102 (?) Diesel FOR SS12-SW4-01	
RECEIVED BY (signature)	DATE/TIME	METHOD OF SHIPMENT	AIRBILL NO.		

Copy Pink Copy

TETRA TECH, INC.
15400 NE 90th, Suite 100
Redmond, Washington 98052
(206) 883-1912
FAX (206) 881-6997

CHAIN OF CUSTODY

DOCUMENT 1 of 1

PROJECT NAME: Kotzebue IRRS
PROJECT NO.: 96763
SAMPLERS: (signature) Allen Sexton
Tt Contact: Rick OSGOOD

SAMPLE ID	TIME	DATE	MEDIA: Air	Surface Water	Ground Water	Soil	Sediment	Water	NUMBER OF CONTAINERS	ANALYSIS: SW8260	SW8270	SW8081 Pesticides	AK102 Diesel	REMARKS
SS12-SW1-01	1525	4/7/04		X					6	X	X	X	X	Cooler # 350
SS12-SW2-01	1600	4/7/04		X					6	X	X	X	X	
SS12-SW3-01	1545	4/7/04		X					6	X	X	X	X	
TB71	1630	4/7/04						X	2	X				

RELINQUISHED BY (signature): Allen Sexton 1930	DATE/TIME: 4/7/04	TOTAL NUMBER OF COTNAINERS: 20		RECEIVED FOR LAB BY (Signature)	DATE/TIME
RECEIVED BY (signature)	DATE/TIME	RELINQUISHED BY (signature)	DATE/TIME	CONDITION OF CONTENTS	TEMPERATURE UPON RECEIPT
RELINQUISHED BY (signature)	DATE/TIME	RECEIVED BY (signature)	DATE/TIME	REMARKS: AK102 Diesel 5 DAY TAT	
RECEIVED BY (signature)	DATE/TIME	METHOD OF SHIPMENT	AIRBILL NO.		

opy Pink Copy -

TETRA TECH, INC.
15400 NE 90th, Suite 100
Redmond, Washington 98052
(206) 883-1912
FAX (206) 881-6997

CHAIN OF CUSTODY

DOCUMENT 1 of 1

PROJECT NAME: Kotzebue LRRS | PROJECT NO.: 9676-13

SAMPLERS: (signature) Arlen Sutton

Tt Contact: Rick OSGOOD

SAMPLE ID	TIME	DATE	MEDIA: Air	Surface Water	Ground Water	Soil	Sediment	Water		NUMBER OF CONTAINERS	ANALYSIS: SW8260	SW8270	SW8081 PCB	SW8081 Pesticides	AK102 Diesel	SW6010	SW7421 Mod Lead				REMARKS
																					Cooler # 309
SS07-SD1-01	1400	7/6/94					X			4		X	X	X	X	X	X				
SS07-SD2-01	1345	7/6/94					X			3		X	X	X	X	X	X				DO NOT Run metals
SS07-SD3-01	1300	7/6/94					X			5	X	X	X	X	X	X	X				
TB35	1630	7/6/94						X		2	X										

RELINQUISHED BY (signature): Arlen Sutton	DATE/TIME: 2130	TOTAL NUMBER OF COTNAINERS: 14		RECEIVED FOR LAB BY (Signature)	DATE/TIME
RECEIVED BY (signature)	DATE/TIME	RELINQUISHED BY (signature)	DATE/TIME	CONDITION OF CONTENTS	TEMPERATURE UPON RECEIPT
RELINQUISHED BY (signature)	DATE/TIME	RECEIVED BY (signature)	DATE/TIME	REMARKS: 5DAY TAT FOR AK102 Diesel	
RECEIVED BY (signature)	DATE/TIME	METHOD OF SHIPMENT	AIRBILL NO.		

Copy Pink Copy

TETRA TECH, INC.
15400 NE 90th, Suite 100
Redmond, Washington 98052
(206) 883-1912
FAX (206) 881-6997

CHAIN OF CUSTODY

DOCUMENT 1 of 1

PROJECT NAME: Kitzebue LRRS RI/FS | PROJECT NO.: 9676-13

SAMPLERS: (signature) David R. Hoare

Tt Contact: Rick Osgood

SAMPLE ID	TIME	DATE	MEDIA: Air	Surface Water	Ground Water	Soil	Sediment			NUMBER OF CONTAINERS	ANALYSIS: ASTM C136	ASTM D5084	REMARKS
AOC#2-GT1-T	1130	7-1-94				X				1	X		4 Coolers and 1 Container Shelby Tubes
AOC#2-GT1-T	1130	7-1-94				X				1		X	1-gal Bucket
AOC#8-GT2-F	1300	7-1-94				X				1	X		Shelby Tube
AOC#8-GT2-F	1300	7-1-94				X				1		X	1-gal Bucket
AOC6-GT3-T	1440	7-1-94				X				1	X		1-gal Bucket
AOC6-GT3-T	1440	7-1-94				X				1		X	Shelby Tube
AOC6-GT4-F	1500	7-1-94				X				1	X		1-gal Bucket
AOC6-GT4-F	1500	7-1-94				X				1		X	Shelby Tube
AOC#1-GT5-F	1030	7-5-94				X				1	X		1-gal Bucket
AOC#1-GT5-F	1030	7-5-94				X				1		X	Shelby Tube
AOC7-GT6-T	1300	7-5-94				X				1	X		1-gal Bucket
AOC7-GT6-T	1300	7-5-94				X				1		X	Shelby
SS05-GT7-B	1415	7-5-94				X				1	X		1-gal Bucket
SS05-GT7-B	1415	7-5-94				X				1		X	1-gal Bucket
SS02-GT8-B	1515	7-5-94				X				1	X		1-gal Bucket
SS02-GT8-B	1515	7-5-94				X				1		X	1-gal Bucket
SS02-GT10-B	1600	7-5-94				X				1	X		Poly Bag
SS02-GT10-B	1600	7-5-94				X				1		X	1-gal Bucket

RELINQUISHED BY (signature): David R. Hoare	DATE/TIME: 7/7/94 1830	TOTAL NUMBER OF COTNAINERS: 18		RECEIVED FOR LAB BY (Signature)	DATE/TIME
RECEIVED BY (signature)	DATE/TIME	RELINQUISHED BY (signature)	DATE/TIME	CONDITION OF CONTENTS	TEMPERATURE UPON RECEIPT
RELINQUISHED BY (signature)	DATE/TIME	RECEIVED BY (signature)	DATE/TIME	REMARKS: ASTM C136/D422 Performed @ Lab's Discretion	
RECEIVED BY (signature)	DATE/TIME	METHOD OF SHIPMENT	AIRBILL NO.		

opy Pink Copy

TETRA TECH, INC.
15400 NE 90th, Suite 100
Redmond, Washington 98052
(206) 883-1912
FAX (206) 881-6997

CHAIN OF CUSTODY

DOCUMENT 1 of 1

PROJECT NAME Kotzebue LRRS | PROJECT NO. 9676.13

SAMPLERS: (signature) Arlen Sexton

Tt Contact: Rick Osgood

SAMPLE ID	TIME	DATE	MEDIA: Air	Surface Water	Ground Water	Soil	Sediment	Waste	NUMBER OF CONTAINERS	ANALYSIS: SW8260	SW8270	SW8081 PCB	AK102 Diesel	SW6010 (Total)	SW7421 Mod-Lead	EPA 9060 TOC	AK 101 Gasoline	SW8081 Pesticides	REMARKS
AOC-02 MW1-T	1400	6/28/94			X				6	X	X	X		X	X			X	PE Samples
AOC-02-7.5	1800	6/28/94				X			1				X						PE Samples
AOC-08-GT1-F-3.0	1130	7/1/94				X			1							X			
AOC-08-GT2-F-2.0	1300	7/1/94				X			1							X			
AOC-06-GT3-F-1.0	1400	7/1/94				X			1							X			
AOC-06-GT4-F-2.0	1400	7/1/94				X			1							X			
TB 67	1400	7/1/94						X	2	X									
AOC-04-GT5-F-MS	1330	7/4/94				X			1							X			MS/MSD Depth 1.0 ft.
SS02-GT8-B-1.0	1420	7/4/94				X			1							X			
SS02-GT9-B-1.0	1430	7/4/94				X			1							X			
ST05-GT7-B-1.0	1400	7/4/94				X			1							X			
AOC-07-GT6-T-1.0	1345	7/4/94				X			1							X			
SS02-GT10-B-1.0	1500	7/4/94				X			1							X			
AOC-04-SB1-7.0	1630	7/4/94				X			7	X	X	X	X	X	X		X	X	
DUP																			

SW6010 + 7421 NON-FILTERED
Cooler # 354

RELINQUISHED BY (signature): Arlen Sexton | DATE/TIME 7/4/94 1800

TOTAL NUMBER OF COTNAINERS: 26

RECEIVED FOR LAB BY (Signature) | DATE/TIME

RECEIVED BY (signature) | DATE/TIME

RELINQUISHED BY (signature) | DATE/TIME

RECEIVED BY (signature) | DATE/TIME

CONDITION OF CONTENTS | TEMPERATURE UPON RECEIPT

RELINQUISHED BY (signature) | DATE/TIME

RECEIVED BY (signature) | DATE/TIME

REMARKS: DO NOT Analyze for 418.1 until contacted by TetraTech.

RECEIVED BY (signature) | DATE/TIME

METHOD OF SHIPMENT | AIRBILL NO.

Please be aware of Sample Dates 6/28, 7/1-

Copy Pink Copy

TRA TECH, INC.
15400 NE 90th, Suite 100
Redmond, Washington 98052
(206) 883-1912
FAX (206) 881-6997

CHAIN OF CUSTODY

DOCUMENT 1 of 1

PROJECT NAME Kotzebue LRRS | PROJECT NO 9676

SAMPLERS: (signature) Allen Sexton

Tt Contact: Rick Osgood

Cooler # 353

SAMPLE ID	TIME	DATE	MEDIA: Air	Surface Water	Ground Water	Soil	Sediment	Water	NUMBER OF CONTAINERS	ANALYSIS: SW8260	SW8270	SW8081 Pesticides	AK102 Diesel	6010 Total Metals	7421 Mod-Lead	8081 PCB's				REMARKS
AOC-02-SB3-3.5	1115	6/30/94				X			4	X	X	X	X							
AOC-02-SB1-2.0	1130	6/30/94				X			4	X	X	X	X							
TB31	1130	6/30/94						X	2	X										
SS02-SS1	1200	6/30/94				X			5	X	X	X	X	X	X	X				
SS02-SS2MS	1245	6/30/94				X			5	X	X	X	X	X	X	X				
SS02-SS3	1315	6/30/94				X			5	X	X	X	X	X	X	X				
SS07-SS1	1600	6/30/94				X			1			X				X				
SS07-SS2	1615	6/30/94				X			1			X				X				
SS12-SB25-4.0	1115	6/30/94				X			1				X							
SS12-SB26-5.0	1200	6/30/94				X			1				X							

RELINQUISHED BY (signature) Allen Sexton	DATE/TIME 6/30/94 1930	TOTAL NUMBER OF COTNAINERS 29		RECEIVED FOR LAB BY (Signature)	DATE/TIME
RECEIVED BY (signature)	DATE/TIME	RELINQUISHED BY (signature)	DATE/TIME	CONDITION OF CONTENTS	TEMPERATURE UPON RECEIPT
RELINQUISHED BY (signature)	DATE/TIME	RECEIVED BY (signature)	DATE/TIME	REMARKS	
RECEIVED BY (signature)	DATE/TIME	METHOD OF SHIPMENT	AIRBILL NO.		

Copy Pink Copy

TRA TECH, INC.
15400 NE 90th, Suite 100
Redmond, Washington 98052
(206) 883-1912
FAX (206) 881-6997

CHAIN OF CUSTODY

DOCUMENT 1 of 1

PROJECT NAME Kotzebue LRRS | PROJECT NO. 9676

SAMPLERS: *(signature)* Marshal Dyer

Tt Contact: Rick OSGOOD

SAMPLE ID	TIME	DATE	MEDIA: Air	Surface Water	Ground Water	Soil	Sediment	Water	NUMBER OF CONTAINERS	ANALYSIS: SW 8260	SW 8270	SW 8081 Pesticides	AK102 Diesel	SW6010 + SW7421 Pb-Lead	(x) or # 303	REMARKS
TB-6	1025	6/29/94						X	2	X						
SS12-SB16-1.5	0930	6/29/94				X			4	X	X	X	X			
SS12-SB17-3.5	1000	6/29/94				X			1				X			
SS12-SB18-1.5	1045	6/29/94				X			1			aw4	X			
SS12-SB19-1.0	1105	6/29/94				X			1	X	X	X	X			NO. # OF containers = 1
SS12-SB20-1.0	1130	6/29/94				X			4	X	X	X	X			
SS12-SB21-1.0	1200	6/29/94				X			1				X			
SS12-SB22-0.5	1245	6/29/94				X			1				X			
SS12-SB23-0.5	1400	6/29/94				X			4	X	X	X	X			
SS12-SB24-1.0	1415	6/29/94				X			1				X			
AOC-05-SB11-1.0	1600	6/29/94				X			4	X	X	X	X			
AOC 02-SB1-2.0MS	1640	6/29/94				X			4	X	X	X	X			
AOC-02-SB2-1.5	1700	6/29/94				X			4	X	X	X	X			
SS12-AB2	1800	6/29/94						X	2	X			aw4			
ST05-SB4-8.0	1030	6/29/94				X			1				X			
ST05-SB5-8.0	1250	6/29/94				X			3	X	X		X			
ST05-SB6-4.0	1515	6/29/94				X			1				X			
ST05-SB7-4.0	1550	6/29/94				X			1				X			
ST05-SB8-4.0	1615	6/29/94				X			1				X			
ST05-SB9-4.0	1640	6/29/94				X			1				X			

RELINQUISHED BY *(signature)* Marshal Dyer	DATE/TIME 6/29/94 1800	TOTAL NUMBER OF COTNAINERS 42		RECEIVED FOR LAB BY *(Signature)*	DATE/TIME
RECEIVED BY *(signature)*	DATE/TIME	RELINQUISHED BY *(signature)*	DATE/TIME	CONDITION OF CONTENTS	TEMPERATURE UPON RECEIPT
RELINQUISHED BY *(signature)*	DATE/TIME	RECEIVED BY *(signature)*	DATE/TIME	REMARKS All Soil AK102 to HAVE 5 DAY TURN AROUND	
RECEIVED BY *(signature)*	DATE/TIME	METHOD OF SHIPMENT	AIRBILL NO.		

opy Pink Copy -

TRA TECH, INC.
15400 NE 90th, Suite 100
Redmond, Washington 98052
(206) 883-1912
FAX (206) 881-6997

CHAIN OF CUSTODY

DOCUMENT 1 of 1

PROJECT NAME Kotzebue LRRS | PROJECT NO. 9676

SAMPLERS: *(signature)* Arlen Sexton

Tt Contact: Rick Osgood

Cooler # 323

SAMPLE ID	TIME	DATE	MEDIA: Air	Surface Water	Ground Water	Soil	Sediment	Water	NUMBER OF CONTAINERS	ANALYSIS: SW8260	SW8270	SW8081 Pest.	AK102	8081 PCB	REMARKS
					X										QA/QC
SS12-EB2	1200	6/29/94						X	5	X	X	X	X		
TB-28	1800	6/29/94						X	2	X					
ST05-EB2	1850	6/29/94						X	52	X					

RELINQUISHED BY *(signature)* Arlen Sexton	DATE/TIME 4/29/94 1900	TOTAL NUMBER OF COTNAINERS		RECEIVED FOR LAB BY *(Signature)*	DATE/TIME
RECEIVED BY *(signature)*	DATE/TIME	RELINQUISHED BY *(signature)*	DATE/TIME	CONDITION OF CONTENTS	TEMPERATURE UPON RECEIPT
RELINQUISHED BY *(signature)*	DATE/TIME	RECEIVED BY *(signature)*	DATE/TIME	REMARKS	
RECEIVED BY *(signature)*	DATE/TIME	METHOD OF SHIPMENT	AIRBILL NO.		

opy Pink Copy

TRA TECH, INC.
15400 NE 90th, Suite 100
Redmond, Washington 98052
(206) 883-1912
FAX (206) 881-6997

CHAIN OF CUSTODY

DOCUMENT 1 of 2

PROJECT NAME: Kotzebue LRRS RI/FS | PROJECT NO.: 9676-13

SAMPLERS: (signature) David R. Hoe

Tt Contact: Rick Osgood

SAMPLE ID	TIME	DATE	MEDIA: Air	Surface Water	Ground Water	Soil	Sediment	WATER	NUMBER OF CONTAINERS	ANALYSIS: 8260	8270	AK102	2021 Pesticides	REMARKS
STO5-SB1-8.0	10:45	6/28/94				X			1	X				All Soil Samples except 3660's in Cooler # 357
STO5-SB1-8.5	10:45	6/28/94				X			2		X	X		
STO5-SB2-8.0	13:45	6/28/94				X			1			X		
STO5-SB3-8.0	17:00	6/28/94				X			3	X	X	X		
AB-STO5	13:00	6/28/94						X	2	X				
SS12-SB1-1.5	1030	6/28/94				X			4	X	X	X	X	
SS12-SB2-2.5	1045	6/28/94				X			4	X	X	X	X	
SS12-SB3-1.5	1115	6/28/94				X			1			X		
SS12-SB4-2.0	1145	6/28/94				X			4	X	X	X	X	
SS12-SB5-1.0	1205	6/28/94				X			1			X		
SS12-SB6-1.0	1220	6/28/94				X			1			X		
SS12-SB7-1.5	1400	6/28/94				X			4	X	X	X	X	
SS12-SB8-2.5	1410	6/28/94				X			1			X		
SS12-SB9-2.0	1430	6/28/94				X			4	X	X	X	X	
SS12-SB10-2.0	1450	6/28/94				X			4	X	X	X	X	
SS12-SB11-3.0MS	1515	6/28/94				X			4	X	X	X	X	
SS12-SB12-2.0	1600	6/28/94				X			4	X	X	X	X	
SS12-SB13-2.0	1615	6/28/94				X			1			X		
SS12-SB14-1.5	1645	6/28/94				X			1			X		
SS12-SB15-1.5	1700	6/28/94				X			1			X		

RELINQUISHED BY (signature): David R. Hoe	DATE/TIME: 6/28/94	TOTAL NUMBER OF COTNAINERS: 59		RECEIVED FOR LAB BY (Signature)	DATE/TIME
RECEIVED BY (signature)	DATE/TIME	RELINQUISHED BY (signature)	DATE/TIME	CONDITION OF CONTENTS	TEMPERATURE UPON RECEIPT
RELINQUISHED BY (signature)	DATE/TIME	RECEIVED BY (signature)	DATE/TIME	REMARKS: 5 DAY TURN AROUND on All Soil AK102	
RECEIVED BY (signature)	DATE/TIME	METHOD OF SHIPMENT	AIRBILL NO.		

Copy Pink Copy

TETRA TECH, INC.
15400 NE 90th, Suite 100
Redmond, Washington 98052
(206) 883-1912
FAX (206) 881-6997

CHAIN OF CUSTODY

DOCUMENT 2 of 2

PROJECT NAME: Kotzebue LRRS RI/FS | PROJECT NO.: 9676-13

SAMPLERS: (signature) Allen Saxton

Tt Contact: Rick Osgood

SAMPLE ID	TIME	DATE	MEDIA: Air	Surface Water	Ground Water	Soil	Sediment	Water	NUMBER OF CONTAINERS	ANALYSIS: SW8260	SW 8270	SW8081 Pesticides	AK102	REMARKS
SS12 AB1	1700	6/28/94						X	2	X				ALL 8260's AND Water (EB's) # 363
SS12-EB1	1700	6/28/94						X	5	X	X	X	X	
ST03 CB1	1730	6/28/94						X	4	X	X		X	
FB-01	1900	6/28/94							2	X				

RELINQUISHED BY (signature): Allen Saxton	DATE/TIME: 6/28/94 2000	TOTAL NUMBER OF COTNAINERS: 52		RECEIVED FOR LAB BY (Signature)	DATE/TIME
RECEIVED BY (signature)	DATE/TIME	RELINQUISHED BY (signature)	DATE/TIME	CONDITION OF CONTENTS	TEMPERATURE UPON RECEIPT
RELINQUISHED BY (signature)	DATE/TIME	RECEIVED BY (signature)	DATE/TIME	REMARKS	
RECEIVED BY (signature)	DATE/TIME	METHOD OF SHIPMENT	AIRBILL NO.		

Copy Pink Copy

TRA TECH, INC.
15400 NE 90th, Suite 100
Redmond, Washington 98052
(206) 883-1912
FAX (206) 881-6997

CHAIN OF CUSTODY

DOCUMENT 1 of 1

PROJECT NAME Kotzebue LRRS

PROJECT NO. 9676

SAMPLERS (signature) Arlen Saxton

Tt Contact: Mr. Rick Osgood

SAMPLE ID	TIME	DATE	MEDIA: Air	Surface Water	Ground Water	Soil	Sediment	Water		NUMBER OF CONTAINERS	ANALYSIS: 6010 Total Metals	7421 Mod. Lead	SW8260	SW8270	SW8081 Pesticides	AK102 Diesel	SW8081 PCB	418.1			REMARKS
AOC-07-SB1-1.0	1050	6/27/94				X				5	X	X	X	X	X	X	X				
AOC-07-SB2-1.0	1130	6/27/94				X				5	X	X	X	X	X	X	X				
AOC-07-SB3-1.0MS	1230	6/27/94				X				4			X	X	X	X	X				
SS08-SB1-1.0	1400	6/27/94				X				5	X	X	X	X	X	X					HIGH PID HIT
SS08-SB2-1.0	1415	6/27/94				X				4			X	X	X	X					
SS08-SB3-1.0	1445	6/27/94				X				4			X	X	X	X					
SS08-SB4-1.5	1545	6/27/94				X				5	X	X	X	X	X	X					
SS08-SB5-1.5	1615	6/27/94				X				4			X	X	X	X					
SS08-AB1	1615	6/27/94						X		2			X								
AB-Background	1330	6/27/94						X		2			X								
Background-SB1-7.0	1330	6/27/94				X				1								X			
Background-SB1-11.0	1330	6/27/94				X				1				X							
Background-SB1-7.5	1330	6/27/94				X				1						X					5 DAY TURN AROUND
Background-SB1-0.5	1330	6/27/94				X				1					X		X				
Background-SB1-10.5	1330	6/27/94				X				1	X	X									
Background-SB1-9.0	1330	6/27/94				X				1			X								
TripBlank-20	0900	6/27/94						X		2			X								

5 DAY Turn Around For All AK-102 Diesel

RELINQUISHED BY (signature)	DATE/TIME	TOTAL NUMBER OF COTNAINERS	48	RECEIVED FOR LAB BY (Signature)	DATE/TIME
Arlen Saxton	6/27/94 1700				
RECEIVED BY (signature)	DATE/TIME	RELINQUISHED BY (signature)	DATE/TIME	CONDITION OF CONTENTS	TEMPERATURE UPON RECEIPT
RELINQUISHED BY (signature)	DATE/TIME	RECEIVED BY (signature)	DATE/TIME	REMARKS	
RECEIVED BY (signature)	DATE/TIME	METHOD OF SHIPMENT	AIRBILL NO.	cooler # 359	

Copy Pink Copy

TRA TECH, INC.
15400 NE 90th, Suite 100
Redmond, Washington 98052
(206) 883-1912
FAX (206) 881-6997

CHAIN OF CUSTODY

DOCUMENT 1 of 1

PROJECT NAME: Kotzebue LRRS Site RI/FS | PROJECT NO: 9076-13

SAMPLERS: (signature) Allen Saxton

Tt Contact: Rick Osgood

SAMPLE ID	TIME	DATE	MEDIA: Air	Surface Water	Ground Water	Soil	Sediment	Water	NUMBER OF CONTAINERS	ANALYSIS: SW 8081 Pesticides	AK101	AK102	SW 8270	SW 8260	SW 6010 - SW 7471	SW 8081 PCB				REMARKS
AOC-08-SB1-1.5	1045	6/26/94				X			6	X	X	X	X	X	X					
AOC-08-SB2-1.5	1120	6/26/94				X			5	X	X	X	X	X						
AOC 08 SB2-3.5	1200	6/26/94				X			6	X	X	X	X	X	X					
SS11-SB1-1.0	1240	6/26/94				X			4	X		X	X	X						
SS11-SB2-0.5	1305	6/26/94				X			4	X		X	X	X						
SS11-SB3-1.0	1330	6/26/94				X			4	X		X	X	X						
SS11-SB4-0.5	1400	6/26/94				X			4	X		X	X	X						
AOC-01-SB1-1.5	1530	6/26/94				X			4	X		X	X	X						
AOC-01-SB2-2.0	1615	6/26/94				X			4	X		X	X	X						
AOC-01-SB3-1.5	1640	6/26/94				X			4	X		X	X	X						
AB-AOC9	1700	6/26/94						X	2					X						
AOC-6-SB1-2.0	1720	6/26/94				X			4	X		X	X	X		X				
AOC6-SB2-1.0	1740	6/26/94				X			5	X		X	X	X	X					
AOC6-SB3-2.0	1815	6/26/94				X			4	X		X	X	X		X				PCBs Confirmed
AOC6-SB4-3.0	—	6/26/94				X			4	X		X	X	X		X				
AOC6-SB5-1.5	1840	6/26/94				X			5	X		X	X	X	X	X				
AOC-01-EB1	1915	6/26/94						X	9	X	X	X	X	X	X	X				
TB-8	—	6/26/94						X	2					X						

RELINQUISHED BY (signature) Allen Saxton	DATE/TIME 6/26/94	TOTAL NUMBER OF COTNAINERS 80		RECEIVED FOR LAB BY (Signature)	DATE/TIME
RECEIVED BY (signature)	DATE/TIME	RELINQUISHED BY (signature)	DATE/TIME	CONDITION OF CONTENTS	TEMPERATURE UPON RECEIPT
RELINQUISHED BY (signature)	DATE/TIME	RECEIVED BY (signature)	DATE/TIME	REMARKS All VOA's (soil) in field # 38	
RECEIVED BY (signature)	DATE/TIME	METHOD OF SHIPMENT	AIRBILL NO.		

opy Pink Copy -

TETRA TECH, INC.
15400 NE 90th, Suite 100
Redmond, Washington 98052
(206) 883-1912
FAX (206) 881-6997

CHAIN OF CUSTODY

DOCUMENT 1 of 1

PROJECT NAME: Kotzebue LRRS
PROJECT NO.: 9676-13
SAMPLERS: (signature) Randal Dyer / Arlen Saxton
Tt Contact: Rick Osgood

SAMPLE ID	TIME	DATE	MEDIA: Air	Surface Water	Ground Water	Soil	Sediment	Water		NUMBER OF CONTAINERS	ANALYSIS: SW8260	AK102	SW8270	SW8081							REMARKS
AOC03-SB1-1.5	1020	6-23-94				X				4	X	X	X	X							
AOC03-SB2-1.5	1100	6-23-94				X				4	X	X	X	X							
AOC03-SB3-3.0	1130	6-23-94				X				4	X	X	X	X							
AOC03-AB	1200	6-23-94						X		2	X										
AOC05-SB2-2.0	1345					X				4	X	X	X	X							
AOC05-SB3-2.0	1415					X				4	X	X	X	X							
AOC05-SB4-2.0	1445					X				4	X	X	X	X							
AOC05-SB5-2.0	1515					X				4	X	X	X	X							
AOC05-SB6-1.0	1545					X				4	X	X	X	X							
AOC05-SB7-1.0	1615					X				4	X	X	X	X							
AOC05-SB8-1.0	1645					X				4	X	X	X	X							
AOC05-SB9-1.5	1705					X				4	X	X	X	X							
AOC05-SB10-1.0	1730					X				4	X	X	X	X							
AOC05-SB11-2.5	—					X				4	X	X	X	X							
TB-74								X		2	X										
AOC05-EB1								X		5	X	X	X	X							

RELINQUISHED BY (signature)	DATE/TIME	TOTAL NUMBER OF COTNAINERS	61	RECEIVED FOR LAB BY (Signature)	DATE/TIME
David R. Hose	6/23/94				
RECEIVED BY (signature)	DATE/TIME	RELINQUISHED BY (signature)	DATE/TIME	CONDITION OF CONTENTS	TEMPERATURE UPON RECEIPT
RELINQUISHED BY (signature)	DATE/TIME	RECEIVED BY (signature)	DATE/TIME	REMARKS All AK102 analyses are 5 day turnaround. SW8260 samples are [illegible] # 371	
RECEIVED BY (signature)	DATE/TIME	METHOD OF SHIPMENT	AIRBILL NO.		

Copy Pink Copy

TETRA TECH, INC.
15400 NE 90th, Suite 100
Redmond, Washington 98052
(206) 883-1912
FAX (206) 881-6997

CHAIN OF CUSTODY

DOCUMENT 1 of 1

PROJECT NAME: Kotzebue LRRS
PROJECT NO.: 9676-13
SAMPLERS (signature): Randal Dyer
Tt Contact: Rick Osgood

SAMPLE ID	TIME	DATE	MEDIA: Air	Surface Water	Ground Water	Soil	Sediment	[illegible]		NUMBER OF CONTAINERS	ANALYSIS: SW8260	SW8081	AK102	SW8270	[illegible]						REMARKS
AOC5-SB1-2.5	1725	6/22/94				X				4	X	X	X	X							
AOC5-SS1	1700	6/22/94				X				4	X	X	X	X							
AOC1-SB12-3.0	1605	6/22/94				X				4	X	X	X	X							
AOC1-SB10-2.0	1630	6/22/94				X				5	X	X	X	X	X						
AOC1-SB9-1.0	1605	6/22/94				X				4	X	X	X	X							
AOC1-EB1	1800	6/22/94						X		6	X	X	X	X	X						EB1 non filtered
~~[illegible]~~ AOC1-AB	[illegible]	[illegible]						X		2	X										
AOC1-TB	1900	6/22/94						X		2	X										
AOC1-SB5-3.5	1425	6/22/94				X				1			X								
AOC1-SB1-1.5	1120	6/22/94				X				4	X	X	X	X							
AOC1-SB2-1.0	1215	6/22/94				X				5	X	X	X	X	X						
AOC1-SB8-1.0	1545	6/22/94				X				4	X	X	X	X							
AOC1-SB7-1.5	1520	6/22/94				X				5	X	X	X	X	X						
AOC1-SB3-2.0	1245	6/22/94				X				4	~~X~~	~~X~~	X	~~X~~							Delete Analysis
AOC1-SB4-2.0	1400	6/22/94				X				5	X	X	X	X	X						
AOC1-SB6-4.0	1450	6/22/94				X				1			X								

RELINQUISHED BY (signature)	DATE/TIME	TOTAL NUMBER OF COTNAINERS	60	RECEIVED FOR LAB BY (Signature)	DATE/TIME
Randal Dyer	1100/6-22-94				
RECEIVED BY (signature)	DATE/TIME	RELINQUISHED BY (signature)	DATE/TIME	CONDITION OF CONTENTS	TEMPERATURE UPON RECEIPT
RELINQUISHED BY (signature)	DATE/TIME	RECEIVED BY (signature)	DATE/TIME	REMARKS All 8260s in cooler # 372.	
RECEIVED BY (signature)	DATE/TIME	METHOD OF SHIPMENT	AIRBILL NO.		

Copy Pink Copy

APPENDIX K - QUALITY ASSURANCE REPORT

INSTALLATION RESTORATION PROGRAM

QUALITY ASSURANCE REPORT

KOTZEBUE LONG RANGE RADAR STATION

KOTZEBUE, ALASKA

17 March 1995

Prepared by:

Quality Assurance
Tetra Tech, Inc.
348 Hospitality Lane, Suite 300
San Bernardino, CA 92408-3216

TABLE OF CONTENTS

1.0 Field Audits

1.1 Soil Sampling Audits
1.1.1 Introduction
1.1.2 Controlling Documents
1.1.3 Field Activity Reviewed
1.1.4 Summary of Soil Sampling Audits

1.2 Surface Soil Sampling Audits
1.2.1 Introduction
1.2.2 Controlling Documents
1.2.3 Field Activity Reviewed
1.2.4 Summary of Surface Soil Sampling Audits

1.3 Groundwater Well Installation/Development Audits
1.3.1 Introduction
1.3.2 Controlling Documents
1.3.3 Field Activity Reviewed
1.3.4 Summary of Groundwater Well Installation/Development Audits

1.4 Surface Water Sampling Audits
1.4.1 Introduction
1.4.2 Controlling Documents
1.4.3 Field Activity Reviewed
1.4.4 Summary of Surface Water Sampling Audits

1.5 Log Book Audits
1.5.1 Introduction
1.5.2 Controlling Documents
1.5.3 Field Activity Audited
1.5.4 Summary of Log Book Audits

1.6 Standard Operating Procedures

2.0 Laboratory Audits

2.1 Tetra Tech, Inc. Audit of Analytical Resources, Inc. (ARI), Seattle, Washington, 22-25 January, 1994
2.1.1 Introduction
2.1.1.1 Past Audits
2.1.1.2 Project Specific Quality Assurance Project Plan
2.1.1.3 On-Site Audit of ARI, Seattle, Washington
2.1.2 Evaluated Methods and Processes
2.1.3 Findings, Deficiencies, Discrepancies, Nonconformances
2.1.3.1 Sample Management
2.1.3.2 Inorganic Analyses

2.1.3.2.1 *Inorganic Sample Extraction Laboratory*
2.1.3.2.2 *Inductively Coupled Argon Plasma, Atomic Absorption Spectroscopy*
2.1.3.2.3 *Cold Vapor Atomic Absorption for Mercury*
2.1.3.2.4 *Total Organic Carbon, EPA Method 9060 Modified*
2.1.3.3 *Organic Analyses*
2.1.3.3.1 *Organic Extractions*
2.1.3.3.2 *Gas Chromatography (EPA Methods 8020 and SW8015/Gasoline)*
2.1.3.3.3 *Gas Chromatography (EPA Methods 8081/Organochlorine Pesticides and Polychlorinagted Biphenyls and EPA Method 8015 Midufued (LUFT/Diesel)*
2.1.3.3.4 *Gas Chromatography/Mass Spectroscopy (EPA Method 8260-Volatile Organics)*
2.1.3.3.5 *Gas Chromatography/Mass Spectrometry (SW 8270-Organic Semi-Volatiles)*
2.1.3.3.6 *Total Petroleum Hydrocarbons (EPA Method 418.1)*
2.1.3.4 *Data Packages*
2.1.3.5 *Analyst Training*
2.1.4 *Resolution of Audit Findings and Deficiencies*

3.0 Raw Data and Magnetic Tape Audits

3.1 Introduction

3.2 Organics Raw Data Audit Methodology
3.2.1 Calculation Formulas for Organic Raw Data Audit

3.3 Inorganic Raw Data Audit Methodology
3.3.1 Calculations for Inorganics Raw Data Audit

3.4 Magnetic Tape Audit Methodology

3.5 Raw Data Audit Summary
3.5.1 List of Auditors and ARI Personnel at the Orientation Meeting (27 September 1994)
3.5.2 Organics Audit Results
3.5.2.1 Organochlorine Pesticides and Polychlorinated Biphenyls
3.5.2.2 Volatile Organic Compounds (EPA Method 8260)
3.5.2.3 Semi-Volatile Organic Compounds (EPA Method 8270)
3.5.3 Inorganics Audit Results
3.5.3.1 Metals (EPA Method 6010 ICP)
3.5.3.2 Metals (EPA Method 7000 Series)
3.5.3.3 Diesel Range Hydrocarbons (Alaska Method AK102)
3.5.4 Magnetic Tape Audit of Performance Evaluation Sample H753
3.5.5 Debriefing Meeting

4.0 Laboratory Performance Evaluation Samples

5.0 Audit of Deliverables

5.1 Data Validation/Verification Review

5.2 ITIR Review

5.3 Installation Restoration Program Information Management System (IRPIMS) Review

5.4 Audit Summaries of Deliverables

5.4.1 Audit of Level I Data Validation
5.4.2 Audit of Third Party Data Validation of a Level II SDG
5.4.3 IRPIMS Audit
5.4.4 Compliance Monitoring
5.4.4.1 Preaudit Package Review
5.4.4.2 SDG Review
5.4.4.3 EPA Method 8081 Compliance Audit
5.4.4.4 Use of Qualifiers Generated by ARI for its SDGs
5.4.4.5 QAPP/SDG Compliance Monitoring
5.4.4.6 Sample Delivery Group (SDG) Review

6.0 Quality Assurance Project Plan Variances for Analytical Resources, Inc. - Seattle, Washington

1.0 FIELD AUDITS

Table I summarizes the field activities performed during the Kotzebue Long Range Radar Station (LRRS), Alaska, RI/FS work effort:

Table I

Field Audit Activities at Kotzebue LRRS RI/FS, Alaska

Date Of Audit	Auditor	Site	Quality Assurance Activities	Documentation
			Soil Sampling Audits	
July 5, 1994	Mr. A. Saxton	SS12-Spills and 3	Soil Sampling Audit (Geophysical)	Environmental Soil Sampling Systems Audit Checklist dated 5 July, 1994
July 12, 1994	Mr. A. Saxton	SS12-Spills 2 and 3	Soil Sampling (Split-spoon) Audit	Environmental Soil Sampling Systems Audit Checklist dated 12 July, 1994. Letter to Mr. R.Osgood detailing observations of audit dated 9 August, 1994
			Surface-Soil Sampling Audit	
July 5, 1994	Mr. A. Saxton	SS12-Spills 2 and 3	Hand Auger-Soil Sampling Audit	Environmental Soil Sampling Systems Audit Checklist dated 5 July, 1994

Date Of Audit	Auditor	Site	Quality Assurance Activities	Documentation
			Groundwater Sampling Audits	
July 8, 1994	Mr. A. Saxton	SSO2-MW2 Waste Accumulation Area #2/Landfill Area	Well Installation Activities Audit	Letter to R. Osgood detailing observations of audit dated 8 July, 1994
July 8, 1994	Mr. A. Saxton	STO5-MW2 Beach Tank Area	Well Development Activities Audit	Letter to R. Osgood detailing observations of audit dated 8 July, 1994
			Surface Water Sampling Audit	
July 10, 1994	Mr. A. Saxton	SS12-Spills 2 and 3	Surface Water Sampling Audits	Environmental Water Sampling Systems Audit Checklist dated 10 July, 1994
			Log Book Audit	
July 5, 1994	Mr. A. Saxton	SS12-Spills 2 and 3	Field Activities Record Keeping Audit	Field Activities Record Keeping Audit Checklist dated 5 July, 1994

1.1 Soil Sampling Audits

1.1.1 Introduction

Drilling and soil sampling activities were performed to document hydrological conditions and to provide a lithologic log of the underlying stratigraphy. Soil samples were collected at approximately 5-foot intervals from each soil and monitoring well borings All soil samples exhibiting abnormal discoloration, or organic vapor concentrations greater than 10 parts per million (ppm) above background, as determined by the appropriate screening technique, were sent to the analytical laboratory to be analyzed for analytes of interest. In the absence of any indications of contamination, samples collected during drilling activities that were associated with sites with surface contaminants, landfill sites, or locations where contaminants may have migrated to, were selected for analysis.

The establishment of boreholes also allowed the collection of subsurface samples for chemical and physical analysis. Tetra Tech's Quality Assurance (QA)1 provided oversight to drilling activities using various regulatory approved documents as well as its own Standard Operating Procedures (SOP) for Field Operations.

1.1.2 Controlling Documents

The following documents were used to provide criteria to evaluate Tetra Tech's staff members performing drilling and soil sampling activities during the work effort at Kotzebue LRRS:

- **Tetra Tech, Inc.**, "*Quality Assurance Project Plan, Installation Restoration Program (IRP) Remedial Investigation/Feasibility Study, Kotzebue Long Range Radar Station, Alaska*", Prepared for United States Air Force, 611th Air Support Group, 611th Civil Engineer Squadron, Elmendorf AFB, Alaska. Volume I (QAPP & Appendix A), October, 1994 (herein refereed to as *QAPP*).

- **Tetra Tech, Inc.**, "*Field Sampling Plan, Installation Restoration Program (IRP) Remedial Investigation/Feasibility Study, Kotzebue Long Range Radar Station, Alaska*", Prepared for United States Air Force, 611th Air Support Group, 611th Civil Engineer Squadron, Elmendorf AFB, Alaska. October, 1994 (herein refereed to as *FSP*).

- **Tetra Tech, Inc.**, "*Standard Operating Procedure, Trip Blanks*". Effective Date: 15 November 1993;

- **Tetra Tech, Inc.**, "*Standard Operating Procedures for Quality Assurance Field Audits for the Air Force Center for Environmental Excellence Installation Restoration Program, Brooks Air Force Base Projects: QA Record Keeping Audit, QA Environmental Soil Sampling Audit, QA Environmental Water Sampling Audit*". Standard Operating Procedure No. 003, Effective Date: 21 April 1994;

- **Tetra Tech, Inc.**, "*Draft Standard Operating Procedures for Field Operations, Chapter II, Borehole Drilling and Sampling*", August, 1994; and

- **United States Air Force (USAF)**, Installation Restoration Program Division (YAQ),

Human Systems Program Office, Human Systems Division (AFSC), *"Handbook to Support the Installation Restoration Program (IRP) Statement of Work - Volume I - Remedial Investigations/Feasibility Studies (RI/FS),"*, pages 2-1 through 2-32; Updated May 1992 (herein referred to as *IRP Handbook*).

1.1.3 Field Activity Reviewed

To acquire environmental soil samples or to install groundwater monitoring wells at Kotzebue LRRS, boreholes were drilled using hollow stem augers. Soil samples were collected using a modified California split-spoon sampler lined with stainless steel sleeves. Sleeves containing sufficient sample were capped with Teflon ™ paper and caps and labeled with the appropriate information to indicate to the laboratory the required analysis. Soil from remaining sleeves were used for headspace analysis for the presence of volatile organic analytes of interest. Soil samples collected from below the water table (where applicable) were retained for the analysis of physical properties for well design and potential use in fate and transport modeling. Decontamination procedures were reviewed by Tetra Tech's QA to ensure compliance with the above approved guidance documents. Tetra Tech's QA used a checklist entitled "*Environmental Soil Sampling Systems Audit Checklist*" (Appendix A).

1.1.4 Summary of Soil Sampling Audits

1.1.4.1

Type:	Soil Shelby Tubes Sampling Audit
Date:	5 July, 1994
Location:	Site 2212, Spills 2 and 3, Kotzebue LRRS, Alaska
Company Audited:	Tetra Tech, Inc.
Field Auditor:	Mr. A. Saxton
Performance:	*All work was performed according to Tetra Tech's Standard Operating Procedures for Field Work and conformed to the Field Sampling Plan; except for deficiencies as noted below:*
Deficiencies Reported:	No deficiencies reported.
Corrective Action:	Not required.

1.1.4.2

Type:	Soil Sampling (Split-spoon) Audit
Date:	12 July, 1994
Location:	Site 2212, Spills 2 and 3, Kotzebue Long Range Radar Station (LRRS), Alaska
Company Audited:	Tetra Tech, Inc.
Field Auditor:	Mr. A. Saxton
Performance:	*All work was performed according to Tetra Tech's Standard Operating Procedures for Field Work and conformed to the Field Sampling Plan; except for*

deficiencies as noted below:

Deficiencies Reported: No deficiencies reported.

Corrective Action: Not required.

1.2 Surface Soil Sampling Audit

1.2.1 Introduction

Surface soil and sediment samples were collected by driving a core sampler lined with stainless steel or brass sleeves to about 6 inches below the surface or as necessary for sufficient sample volume. The hand auger was used to establish a hole at a specified depth of up to 5 feet below the surface at which the soil samples were obtained using the driven core sampler. In the absence of any indications of contamination, surface samples collected during drilling activities that were associated with sites with surface contaminants, landfill sites, or locations where contaminants may have migrated to, were selected for analysis.

1.2.2 Controlling Documents

The following documents were used to provide criteria to evaluate Tetra Tech staff members performing surface soil sampling activities during the work effort at Kotzebue LRRS:

- *IRP Handbook*, pages 2-1 through 2-32;
- **Tetra Tech, Inc.**, "*QAPP*" and "*FSP*";
- **Tetra Tech, Inc.**, "*Standard Operating Procedure, Trip Blanks*". Effective Date: 15 November 1993;
- **Tetra Tech, Inc.**, "*Standard Operating Procedures for Quality Assurance Field Audits for the Air Force Center for Environmental Excellence Installation Restoration Program, Brooks Air Force Base Projects: QA Record Keeping Audit, QA Environmental Soil Sampling Audit, QA Environmental Water Sampling Audit*". Standard Operating Procedure No. 003, Effective Date: 21 April 1994; and
- **Tetra Tech, Inc.**, "*Draft Standard Operating Procedures for Field Operations, Chapter IX, Surface, Sediment, and Hand Auger Sampling*", August, 1994.

1.2.3 Field Activity Reviewed

Tetra Tech's QA used a checklist entitled "*Environmental Soil Sampling Systems Audit Checklist*" (Appendix A).

Pertinent information associated with these soil samples such as discoloration, and organic vapor

measurements were recorded in the sampler's logbook. Samples selected for chemical and/or physical analysis were collected in a steel or brass sleeve. After sampling, the sleeves were removed from the sampling barrel. Each end of the sleeve was sealed with Teflon ™ lined plastic end caps and the caps secured with tamper proof inert Teflon™ tape. The sleeves were then stored in ice chests with enough Blue Ice™ to ensure that the samples will remain at the prescribed temperature. The required analysis were recorded on the appropriate COC and the samples were transported to the laboratory for analysis.

1.2.4 Summary of Surface Soil Sampling Audits

Type: Hand-Auger Soil Sampling Audit
Date: 5 July, 1994
Location: Site 2212, Spills 2 and 3, Kotzebue LRRS, Alaska
Company Audited: Tetra Tech, Inc.
Field Auditor: Mr. A. Saxton

Performance: *All work was performed according to Tetra Tech's Standard Operating Procedures for Field Work and conformed to the Field Sampling Plan; except for deficiencies as noted below:*

Deficiencies Reported:

- A 1 1/2 oz. glass Volatile Organics (VOA) soil bottle was used instead of a 6-inch brass sleeve. Some disturbance of the sample did occur.

Corrective Action: No corrective action was suggested; the disturbance was unavoidable.

Resolutions: *The EPA Method 8260 soil sample from the hand auger has the possibility of yielding low analytical results due to the limited disturbance of the samples. The Project and Operations Managers were informed of the audit results.*

1.3 Groundwater Well Installation/Development Audits

1.3.1 Introduction

Groundwater samples were obtained from wells that were installed as part of the Kotzebue LRRS work effort. Initial groundwater sampling followed a series of procedures for proper well preparation and sample collection that included well development, well purging and sampling. The well development preceded well purging and sampling by a minimum of 5 days to allow the well to stabilize. During any field day, groundwater samples were collected in order from the least likely to the most likely contaminated wells to minimize the possibility of cross-contamination by sampling activities.

1.3.2 Controlling Documents

The following documents were used to provide criteria to evaluate Tetra Tech staff members performing groundwater well installation/development and sampling activities during the work effort at Kotzebue LRRS:

- *IRP Handbook*, pages 2-1 through 2-32;

- **Tetra Tech, Inc.**, "*QAPP*" and "*FSP*";

- **Tetra Tech, Inc.**, "*Standard Operating Procedure, Trip Blanks*". Effective Date: 15 November 1993;

- **Tetra Tech, Inc.**, "*Standard Operating Procedures for Quality Assurance Field Audits for the Air Force Center for Environmental Excellence Installation Restoration Program, Brooks Air Force Base Projects: QA Record Keeping Audit, QA Environmental Soil Sampling Audit, QA Environmental Water Sampling Audit*". Standard Operating Procedure No. 003, Effective Date: 21 April 1994; and

- **Tetra Tech, Inc.**, "*Draft Standard Operating Procedures for Field Operations, Chapter III, Well Installation, Chapter IV, Well Development, Chapter V, Groundwater Sampling, Chapter VI, Static Water Level Measurements, Chapter VII, Aquifer Testing*", August, 1994.

1.3.3 Field Activity Reviewed

Tetra Tech QA Field Auditor used the "*Environmental Water Sampling Systems Audit Checklist*".

Groundwater samples were collected using Teflon ™ or stainless steel collection vessels such as bailers equipped with bottom-emptying devices. Sample bottles described in the "*Field Sampling Plan*" (herein referred to as *FSP*), appropriate for the required test were used to collect the environmental sample. After filling to the top but not allowing overflow, the containers were tightly capped with the provided lids and secured with tamper proof, inert (e.g., Teflon™) tape. Zero headspace was required for all water samples for volatile analysis. Samples taken for dissolved metal analysis were filtered through a 0.45 μm membrane filter within 15 minutes of sampling. The samples were labeled, wrapped in bubble wrap and stored in ice chests containing sufficient Blue Ice™ to ensure that the samples arrived at the laboratory within the temperature criteria.

Where applicable the sample containers were filled in the order of decreasing volatilization as follows:

- Volatile organics;
- Volatile total petroleum hydrocarbons (gasoline);
- Semivolatile organics;
- Semivolatile total petroleum hydrocarbons (diesel and jet fuel); and
- Metals and general anions and cations.

1.3.4 Summary of Groundwater Well Installation/Development Audits

1.3.4.1

Type: Well Installation Activities Audit
Date: 8 July, 1994
Location: Site SSO2 - MW2 Waste Accumulation Area #2/Landfill Area, Kotzebue LRRS, Alaska
Company Audited: Tetra Tech, Inc.

Field Auditor: Mr. A. Saxton

Performance: *All work was performed according to Tetra Tech's Standard Operating Procedures for Field Work and conformed to the Field Sampling Plan; except for deficiencies as noted below:*

Deficiencies Reported: A minimum of 6 inches of filter sand was used above the well casing. Well was surged to settle the sand. Due to the shallow well depth no tremie pipe was used. Sand and bentonite were poured from the top.

Corrective Action: Not required (please see Resolutions below).

Resolutions: *Variances were obtained from the AFCEE to accommodate the above described deficiencies (Letter dated 3 May, 1994, from the AFCEE's PACAF Team Chief Samer N. Karmi to Tetra Tech's Mr. Rick Osgood).*

1.3.4.2

Type: Well Development Activities Audit
Date: 8 July, 1994
Location: Site STO5-MW2, Beach Tank Area, Kotzebue LRRS, Alaska
Company Audited: Tetra Tech, Inc.
Field Auditor: Mr. A. Saxton

Performance: *All work was performed according to Tetra Tech's Standard Operating Procedures for Field Work and conformed to the Field and Sampling Plan; except for deficiencies as noted below:*

Deficiencies Reported: Unable to achieve turbidity of less than 5 NTU.

Corrective Action: Prior to sampling perform adequate purging, wastewater container volume permitting, to achieve an acceptable turbidity readings.

Resolutions: *Logistical problems do not allow unlimited purging to achieve ideal well development readings.*

1.4 Surface Water Sampling Audits

1.4.1 Introduction

Surface water samples were generally taken from the same location as a sediment samples. The locations for collection of surface water samples that were associated with sites with surface contaminants, landfill sites, or locations where contaminants may have migrated into that water body.

1.4.2 Controlling Documents

The following documents were used to provide criteria to evaluate Tetra Tech, Inc. staff members performing surface water sampling activities during the work effort at Kotzebue LRRS:

- *IRP Handbook*, pages 2-1 through 2-32;
- **Tetra Tech, Inc.**, "*QAPP*", and "*FSP*";
- **Tetra Tech, Inc.**, "*Standard Operating Procedure, Trip Blanks*". Effective Date: 15 November 1993;
- **Tetra Tech, Inc.**, "*Standard Operating Procedures for Quality Assurance Field Audits for the Air Force Center for Environmental Excellence Installation Restoration Program, Brooks Air Force Base Projects: QA Record Keeping Audit, QA Environmental Soil Sampling Audit, QA Environmental Water Sampling Audit*". Standard Operating Procedure No. 003, Effective Date: 21 April 1994; and
- **Tetra Tech, Inc.**, "*Draft Standard Operating Procedures for Field Operations, Chapter VIII, Surface Water Sampling*", August, 1994.

1.4.3 Field Activity Reviewed

Tetra Tech's QA Field Auditor used a checklist entitled "*Environmental Water Sampling Systems Audit Checklist*" (Appendix A).

Water samples taken from a surface water source were collected using Teflon™ or stainless steel collection vessels such as bailers equipped with bottom-emptying devices. Sample bottles, described in the "*Field Sampling Plan*", appropriate for the required test were used to collect the environmental sample. After filling to the top but not allowing overflow, the containers were tightly capped with the provided lids and secured with tamper proof, inert (e.g., Teflon™) tape. Zero headspace was required for all water samples for volatile analysis. Samples taken for dissolved metal analysis were filtered through a 0.45 μm membrane filter within 15 minutes of sampling. The samples were labeled, wrapped in bubble wrap and stored in ice chests containing sufficient Blue Ice™ to ensure that the sample arrived at the laboratory within the temperature criteria.

Wherever required, sample containers were filled in the order of decreasing volatilization as follows:

- Volatile organics;
- Volatile total petroleum hydrocarbons (gasoline);
- Semivolatile organics;
- Semivolatile total petroleum hydrocarbons (diesel and jet fuel); and
- Metals and general anions and cations.

1.2.4 Summary of Surface Water Sampling Audits

1.2.4.1

Type: Surface Water Sampling Audit

Date: 10 July, 1994
Location: Kotzebue LRRS, Alaska
Company Audited: Tetra Tech, Inc.
Field Auditor: Mr. A. Saxton

Performance: *All work was performed according to Tetra Tech's Standard Operating Procedures for Field Work and conformed to the Field Sampling Plan; except for deficiencies as noted below:*

Deficiencies Reported: No deficiencies reported.

Corrective Action: Not required.

1.5 Log Book Audit

1.5.1 Introduction

All information pertinent to a field survey and/or sampling effort related to the work effort at Kotzebue LRRS was recorded in a permanently bound field log book. The field log books were waterproof and the pages were consecutively numbered. Entries were made with indelible ink and were detailed at a level so as to enable reconstruction of the events without relying on memory.

1.10.2 Controlling Documents

The following documents were used to provide criteria to evaluate Tetra Tech, Inc. staff log book entries that were connected to the work effort at Kotzebue LRRS:

- *IRP Handbook*, pages 2-1 through 2-32;
- **Tetra Tech, Inc.**, "*QAPP*";
- **Tetra Tech, Inc.**, "*Standard Operating Procedures for Quality Assurance Field Audit for the Air Force Center for Environmental Excellence Installation Restoration Program, Brooks Air Force Base Projects. QA Record Keeping Audits, QA Environmental Soil Sampling Audit, QA Environmental Water Sampling Audit*". Standard Operating Procedure No. 003, Effective Date: 21 April 1994; and
- **Tetra Tech, Inc.**, "*Draft Standard Operating Procedures for Field Operations, Chapter II, Borehole Drilling and Sampling; Chapter IV, Well Development; Chapter V, Groundwater Sampling, Chapter IX, Surface, Sediment, and Hand Auger Sampling; and Chapter XI, Landfill Trenching and Sampling*", August, 1994.

1.5.3 Field Activity Audited

Tetra Tech's QA Field Auditor used a checklist entitled "*Field Activities Record Keeping Audit Checklist*" (Appendix A).

The Tetra Tech, Inc. auditor reviewed logbooks for the following entries:

- Name and address of field contact located on the log book cover;
- The date of the entry;
- Names and affiliations of personnel on the site;
- General description of each day's field activities;
- Documentation of weather conditions during sampling;
- Location of sampling (e.g., borehole number and proximity to nearest cross street or topographic point of reference);
- Data points for field equipment derived during calibration procedures;
- Observations of sample or collection environment;
- Identification of sampling device;
- Any field measurements made, such as ambient air monitoring or headspace analysis of soil;
- Sequence of collection of environmental samples;
- Type of sample matrix (e.g., soil, groundwater, etc.);
- Date and time of environmental sample collection;
- Field sample identification number;
- Sample distribution (e.g., laboratory, courier, etc.);
- Sampler's name;
- Sample type (e.g., composite, normal, duplicate, etc.);
- For groundwater samples, which sample was filtered plus filter screen size and type; and
- Preservative use, if applicable, for the environmental sample.

The bottom of each page in the logbook was signed or initialed by the individual making the entry. If an error was made, corrections were made by simply crossing a line through the error is such a manner that the original entry can still be read, and the correct information was added as the change. All corrections were initialed and dated by the author.

1.5.4 Summary of the Log Book Audit

Type:	Field Activities Record Keeping Audit
Date:	5 July, 1994
Location:	Kotzebue LRRS, Alaska
Company Audited:	Tetra Tech, Inc.
Field Auditor:	Mr. A. Saxton
Performance:	*All work was performed according to Tetra Tech's Standard Operating Procedures for Field Work and conformed to the Field Sampling Plan; except for deficiencies as noted below:*

Deficiencies Reported: No deficiencies reported.

Corrective Action: Not required.

1.6 Standard Operating Procedures

The following Standard Operating Procedures (Appendix A) were used to provide criteria and corrective action guidance for the various field efforts for the Kotzebue LRRS project:

- **Tetra Tech, Inc.**, " *Draft Standard Operating Procedures for Field Operations*", August, 1994.
    - Chapter II, " Borehole Drilling and Sampling";
    - Chapter III, " Well Installation";
    - Chapter IV, " Well Development";
    - Chapter V, " Groundwater Sampling";
    - Chapter VI, " Static Water Level Measurement ;
    - Chapter VII, " Aquifer Testing";
    - Chapter VIII," Surface Water Sampling";
    - Chapter IX, " Surface, Sediment, and Hand Auger Sampling";
    - Chapter XI, " Landfill Trenching and Sampling"; and
    - Chapter XV, " Sample Storage, Packaging and Shipping".
- **Tetra Tech, Inc.**, "*Standard Operating Procedures for Quality Assurance Field Audits for the Air Force Center for Environmental Excellence Installation Restoration Program, Brooks Air Force Base Projects: QA Record Keeping Audit, QA Environmental Soil Sampling Audit, QA Environmental Water Sampling Audit*". Standard Operating Procedure No. 003, Effective Date: 21 April 1994.
- **Tetra Tech, Inc.**, "*Standard Operating Procedure for Packaging and Shipping of Groundwater and Soil Samples*". Effective date: 13 November, 1992; and
- **Tetra Tech, Inc.**, " *Standard Operating Procedure: Trip Blanks*". Effective date: 15 November, 1993.

2.1 Tetra Tech, Inc. Audit of Analytical Resources, Inc.(ARI), Seattle, Washington, 22-25 January, 1994

2.1.1 Introduction

Analytical Technologies, Inc. (ARI), Seattle, Washington (henceforth called ARI), was chosen by Tetra Tech in January 1994 to analyze environmental samples of both soil and water matrices collected at Kotzebue Long Range Radar Station (LRRS), Alaska, for solid waste analytes of interest.

2.1.1.1 Past Audits

Tetra Tech's Dr. Garabed H. Kassakhian, Project QA/QC Manager (San Bernardino, California) and Mr. Roderick Carr, Project Manager (Redmond, Washington) made a preaudit visit to ARI on 11-12 January, 1994 to assess the laboratory's suitability and preparedness for USAF quality work.

On 8 February, 1994, ARI submitted a Preliminary Review Package to the Air Force Center for Environmental Excellence (AFCEE) for their review. On 17-18 March, 1994, this package was also reviewed by Tetra Tech's Auditing Chemist, Mr. Michael Wilson (San Bernardino, California). In a letter, dated 17 June, 1994, the AFCEE's Chief of the Consultant Operations Division, Lt.-Col. Dr. Darrel R. Cornell informed Tetra Tech's Dr. Garabed H. Kassakhian that Tetra Tech could submit U.S. Air Force (USAF) environmental samples to ARI.

2.1.1.2 Project Specific Quality Assurance Project Plan

A draft project specific Quality Assurance Project Plan (QAPP) was written by Tetra Tech, entitled *"Quality Assurance Project Plan, Installation Restoration Program (IRP) Remedial Investigation/Feasibility Study, Kotzebue Long Range Radar Station, Alaska"*; this draft QAPP was submitted to the AFCEE and state and Federal regulators for their review and comments. The QAPP was finalized in October 1994.

2.1.1.3 On-Site Audit of ARI, Seattle, Washington

Based on the AFCEE's recommendation, on 22-25 March, 1994, Tetra Tech conducted an on-site audit of the laboratory to determine whether the laboratory could analyze environmental samples using USAF specifications.

Key ARI and Tetra Tech staff members that participated in the audit were as follows:

Analytical Resources, Inc. (ARI):

Ms. Liz Anderson, Supervisor, Semivolatile GC/MS
Mr. Brian N. Bebee, Supervisor, Volatile Organics GC/MS
Ms. Susan Dunnihoo, Supervisor, Data Management
Mr. Jim Fick, Supervisor, Inorganics Spectroscopy
Ms. Terri Hedger, Supervisor, Sample Receiving and Management
Mr. John Hicks, Project Manager
Mr. Peter Kepler, Supervisor, Volatile Organics by GC
Ms. M. Suzanne Kitch, Quality Assurance Officer
Mr. Jay Kuhn, Section Supervisor
Mr. J. Nelson, Analyst, Inorganic Extraction Laboratory
Ms. Tarry Hawk-Thomas, Supervisor, Organic Extractions
Ms. Michelle Turner, Manager, Quality Assurance

Tetra Tech, Inc. Evaluators:

Dr. Garabed H. Kassakhian, Project QA/QC Manager (San Bernardino, California)
Ms. Stephanie Pacheco, Auditor, Quality Assurance (San Bernardino, California)

Tetra Tech Observer:

Mr. Roderick A. Carr, Project Manager (Redmond, Washington)

On 22 March, 1995 an orientation meeting was held between the Tetra Tech evaluators and ARI's Ms. Michelle Turner, Mr. John Hicks, and Ms. M. Suzanne Kitch.

2.1.2 Evaluated Methods and Processes

The following methods and processes were reviewed during the on-site evaluation/audit of PACE-Minnesota:

- Volatile Organics by EPA Methods 8020, 8240 and 8260.
- Semivolatile Organics by EPA Method 8270;
- Pesticides and PCBs by EPA Method 8080;
- Total Petroleum Hydrocarbons by EPA Method 8015 Modified;
- Toxicity Characteristic Leachate Procedure by EPA Method 1311;
- Cyanide by EPA Method 9010;
- Polycyclic Aromatic Hydrocarbons by EPA Method 8310
- Total Metals by EPA Method 6010;
- Metals and Metalloids by EPA Methods 7000;
- Sample Management;
- Deliverables and Data Packages;
- Performance Evaluation Results; and
- Analyst Training.

2.1.3 Findings, Deficiencies, Discrepancies, Nonconformances

2.1.3.1 Sample Management

The following deficiencies, discrepancies, and/or nonconformances were noted during the audit:

- Sample custody/transfer was inadequately documented.

- Labels did not contain the (bin) location in the refrigerator.

- The refrigerators were checked only on work-days. There was no remote alarm system to alert when the electricity had been turned off. Over a long weekend, up to 4 days may go by without anyone being aware of this.

- On the task sheet the expiration of holding times were not clearly spelled out for different tests. Each manager tracked the sample holding times; there were no flags to alert sample tracking.

2.1.3.2 Inorganic Analyses

The following deficiencies, discrepancies, and/or nonconformances were noted during the audit:

2.1.3.2.1 Inorganic Sample Extraction Laboratory

- There was no SOP or instruction on how to perform spiking, i.e. specific spike amounts to be added to specific samples. All that existed was a loose leaf notebook paper with some notes and a strong reliance on the belief that the label on the working spike solution bottle was correct.

- The SOP for inorganic sample preparation was present but not finalized nor reviewed by ARI's Quality Assurance.

2.1.3.2.2 Inductively Coupled Argon Plasma, Atomic Absorption Spectroscopy.

- Instrument calibration records indicated that traceable standards were being used in sample preparation, but the unique identifier for that standard which should relate it back to the working standards logbook was not present.

- The working standard preparation and neat standard logbook did not note the expiration dates of the standards, although the neat and working standard bottles had labels with the expiration date clearly identified.

- ARI had a very confusing definition of reporting limits, practical quantitation limits (PQL) and method/instrument detection limits. As a result, it was unclear whether they had statistically derived in-house limits for Inductively Coupled Argon Plasma, (ICP) and Atomic Absorption (AA) analyses. Tetra Tech strongly recommended that this be clarified prior to the analysis of the first USAF environmental sample.

- The analysts interviewed were very much aware of what constitutes an out-of-control event, but there were no clear instructions from the laboratory on how and what corrective action the analysts should take.

- The SOPs reviewed did not have instructions for spiking procedures. ARI relied on analyst knowledge for how and at what concentration the samples should be spiked.

- Each instrument run-log contained terminated or invalidated runs; the reasons why the runs were terminated were not clearly identified in the run log. Nor did it discuss how the system was brought back into compliance, when the run termination was a result of a nonconformance.

- The maintenance logs did not detail the diagnosis of the problem nor the verification measures used to demonstrate a return to normal operations. The analysts relied on the Corrective Action Log to record corrective action and return to control.

2.1.3.2.3 Cold Vapor Atomic Absorption for Mercury

- The working mercury standards used were expired. Intermediate standards were prepared on a daily basis in unlabeled volumetric flasks.
- The SOP had not been finalized.
- The analytical run-log did not include details of the five point calibration curve that is performed on a daily basis. Only review of the raw data demonstrated the presence of a five point calibration.

2.1.3.2.4 Total Organic Carbon, EPA Method 9060 Modified

- An SOP for Total Organic Carbon was present but not in final format.
- A bound run-log was not used for the determination of Total Organic Carbon. Instead, a loose bench sheet was used.

2.1.3.3 Organic Analyses

The following deficiencies, discrepancies, and/or nonconformances were noted during the audit:

2.1.3.3.1 Organic Extractions

- The current (old) SOP did not contain the surrogate and spiking techniques, instructions for taking samples out of and returning them to the walk-in refrigerator.
- No expiration dates were posted on the spikes or surrogates. It is assumed that they expire one year from the preparation date.
- Separate syringes are used for spiking and surrogate delivery. They are not labelled as such, nor are the identical boxes into which they are stored/returned.
- The Gel Permeation Cleanup (GPC) was located in the same laboratory as the organic extractions operation, with no fume hood, or ventilation/exhaust system of its own. Although ARI seemed not to have experienced methylene chloride contamination (usually in the range of less than 2 parts per billion) Tetra Tech strongly recommended that the GPC be removed from the organic extraction room. It requires a separate, dedicated hood and ventilation system. It should have a separate room with negative pressure (air flow into the room) and an exhaust to the outside.

2.1.3.3.2 Gas Chromatography (EPA Methods 8020 and SW8015/Gasoline)

- *EPA Method 8020*: the initial benzene, toluene, ethylbenzene and xylenes (BTEX) calibrations performed at the method-specified number of concentration levels were a confusing hybrid of the old (5, 25, 50, 100, 125 μg/L) and draft (1, 10, 25, 50, 100 μg/L) SOPs. A non-traceable Accustandard standard without a 2nd source standard was used for confirmation.

- *EPA Method 8015 Modified Gasoline*: the calibrations were verified at the appropriate frequencies using second source standards from an independent supplier, i.e. Accustandard and Macroscientific. No Accustandard certificates were available at the time of the audit.

- The 8015 Modified Gasoline and 8020 standards did not carry expiration dates or concentrations.

- Inadequate samp.. control once the sample was extracted and put in the refrigerator. No one signed out the samples from the refrigerator, and the only way of tracking who worked with the sample was from the working log books.

- *EPA Method 8020*: Practical Quantitation Limits (PQLs) for soil were higher than the EPA Method 8260 limits, i.e. the Reporting Detection Limits (RDLs) exceed the IRP Handbook's Maximum Quantitation Limits (MQLs). According to ARI this was caused by methanol extraction rather than using a direct sparge as required by SW846.

- Tetra Tech recommended that ARI's EPA Method 8020 not be used for the Kotzebue LRRS project.

- Control limits for 8015 Modified Gasoline were not available at the time of the audit.

- Return to control after routine or non-routine maintenance was not documented.

- The laboratory was using outdated SOPs which contain crossed out sections, with no authorized change date or initials of the ARI staff member making or authorizing these changes. These SOPs did not discuss appropriate corrective action for common out-of-control situations.

- The surrogate acceptance limits were NOT included either in the old, or in the draft SOPs.

- ARI's Quality Assurance did not conduct audits of the organic Gas Chromatography (GC) section. An audit report should include the average workload of the GC section, the number of analytical violations and a summary of corrective action requests issued.

2.1.3.3.3 Gas Chromatography (EPA Methods 8081/Organochlorine Pesticides and Polychlorinated Biphenyls and EPA Method 8015 Modified (LUFT/Diesel))

- Calibrations were not verified at the appropriate frequencies using second source standards. The standards were verified at the time they were made rather than during the analytical run. The second source material was from the same vendor as the primary source.

- Method specific criteria were not being used for EPA Method 8081. ARI used modifications to the calibration requirements that had been approved by the State of Washington. The analyst quantitated against the continuing calibration point rather than the initial calibration curve.

- GC calibration records were not being reviewed by either the supervisor of the section or by ARI's Quality Assurance.

- Current standard were stored in the same location as expired standards. A recommendation was made at the time of the audit that expired standards be placed in a separate location.

- Purchased standard solutions were uniquely identified in the preparation logbook but expiration dates of standards were not located in the logbook; only on the label of the standard.

- Working standards located in Refrigerator #17 were inconsistently labeled with respect to the preparation log book.

- ARI had a very confusing definition of RDL, PQL and method/instrument detection limit. Tetra Tech strongly recommended that this discrepancy be alleviated prior to the first environmental sample being sent to them.

- *EPA Method 8081*: the analyst quantitates any positive value against the continuing calibration point rather than the initial calibration curve. Tetra Tech recommended that all Kotzebue LRRS samples sent to ARI for analysis be quantitated against the initial calibration per SW-846.

- At the time of the audit, ARI did not have an MDL study for soil and water for EPA Method 8081. Tetra Tech impressed on ARI that this information must be acquired by the laboratory for all associated pesticides, all PCB isomers and Toxaphene prior to the receipt of any USAF samples.

- Samples with outlying surrogates were not being reanalyzed. At the time of the audit, Tetra Tech requested that the samples with failed surrogate recovery be reanalyzed to confirm matrix interference.

- SOPs were method-specific and were available at the bench for EPA Method 8081 and 8015 Modified but were not in a final form.

- SOPs indicated in some locations the appropriate corrective action for out-of-control situations. This was not consistently present throughout the SOPs.

- The SOPs did not provide sufficient guidance for corrective action for outlying surrogate recoveries. The analyst relied on the direction provided by the ARI Project Manager.

- The SOPs did not identify the concentrations of the calibration verification standards. ARI relied on SW-846 Method 8000 for direction.

- The SOPs did not provide instructions on how to spike samples with appropriate analytes and surrogates. ARI relied on SW-846 Method 8000 for direction.

- The SOPs did list acceptance criteria but not corrective actions for common out-of-control events.

- The SOPs did not reflect that the laboratory was analyzing EPA Method 8081 by the Contract Laboratory Program Statement of Work. No samples were being analyzed for EPA Method 8081 analytes by SW-846 protocol. This transition from CLP to SW-846 may be difficult for ARI to accomplish.

- The maintenance logs did not detail the diagnosis of the problem nor the verification measures used to demonstrate a return to normal operations. The analysts relied on the Corrective Action Log to note corrective action and return to control.

2.1.3.3.4 Gas Chromatography/Mass Spectroscopy (EPA Method 8260-Volatile Organics)

- All standards and check compounds were not traceable.

- The response factor for method calibration compounds (SPCC/CCV) was not 20% as in Sw846, but 25% as in CLP.

- Return to control was not documented.

- The SOP did not conform to SW846. There were significant modifications that would certainly trigger variance requests.

- The laboratory did not have a mechanism to revise outdated SOPs. It was left to the discretion of the analyst. SOPs should be revised even when one procedural item is changed.

- Surrogates had been moved to different internal standards with no study to back-up claims, whether the changes were scientifically justified, e.g. a new surrogate, 1,2-Dichlorobenzene-d_4, has been added under 1,4-Dichlorobenzene-d_4. 1,2-Dichloroethane-d_4 was quantitated under pentafluorobenzene, rather than the 1,4-Difluorobenzene specified by the method.

- The initial calibration had a very wide range, i.e. from 1 to 200 parts per billion (ppb), versus the usual 10 to 200 ppb.

- Used a larger spiking list than required by the method.

- Control limits were not available, and control charting had not been done. The control limits were based on historical data from non-8260 methods. The Kotzebue LRRS QAPP matrix spike/matrix spike duplicate (MS/MSD) limits are not valid.

- Tetra Tech requested that all the response factors be thoroughly reviewed.

- ARI's QA is not involved in the internal auditing of EPA Method 8260 operations.

- Manual integrations were not documented adequately.

2.1.3.3.5 Gas Chromatography/Mass Spectrometry (SW 8270 - Organic Semi-Volatiles)

- Initial calibration concentrations are different for different instruments, e.g.

INCOS:	5,10,25,50,80 ng/uL
Finnigan 4500:	5,10,25,40,60 ng/uL
CLP requires	*10,25,40,60,80 ng/uL*

- CLP specified calibration criteria were used throughout.
- The MDL studies seemed to be trending out of control on the high side.
- The standards did not have expiration dates, only preparation dates.
- Internal standards did not have their concentrations marked on their containers.
- The neat standards, reportedly purchased years ago, did not have expiration dates.
- There was no comparison available to indicate whether the laboratory determined control limits exceeded the method control limits.
- The control limits were CLP method specified, not laboratory generated.
- The SOP did not correspond to actual practices, and contained handwritten notes all over the pages, e.g. sample with outlying surrogate recoveries are reanalyzed.
- The SOP was not clearly written.
- The SOP did not address the preparation of the standards.
- ARI's Quality Assurance did not conduct audits of the semi-volatiles GC/MS.
- Mr. Don Patton, Final Data Reviewer (FDR), reviewed all manual data integrations. Quality Assurance was not included in this loop.
- Although all major instruments of the GC/MS section had maintenance logs, the pages were not numbered, and the logbooks were not attached to each instrument.
- The maintenance logs did not describe the verification measures to demonstrate a return to normal operation following major service.
- The log entries contained the date and description of the problem, but no signature of the analyst or the operator.

2.1.3.3.6 Total Petroleum Hydrocarbons (EPA Method 418.1)

- The surrogate used for EPA Method 418.1 did not have an expiration date on it. All

standards must have a date of preparation and expiration on the label.

- The standard #S0321945 could not be traced from the run log book to the working standard log book.

- There was no way to trace another standard (#254-38) to the working log book as the standard appeared to have been mislabeled.

- No corrective action was present for the value below the warning level nor for those values indicating a possible trend or bias. Tetra Tech recommended that control charts for this method must be reviewed by ARI's Quality Assurance for the detection of trends or bias.

- Documentation of the out-of-control event was not clearly elucidated.

- The SOP for EPA Method 418.1 could not be located. As a result, no SOP for this method was reviewed. An SOP for this method must be established by ARI prior to the receipt of environmental samples from the RI/FS work effort at Kotzebue LRRS.

- The preventative maintenance log book was not located with the FTIR instrument and could not be reviewed.

- *Tetra Tech's auditors recommended that no USAF samples be sent to ARI for analysis by EPA Method 418.1 until the deficiencies identified during this audit had been corrected.*

2.1.3.4 Data Packages

Tetra Tech reviewed a U.S. Army Corps of Engineers data package, as a typical Sample Delivery Group (SDG).

- The EPA Method 8270 surrogates were outside control limits, but had not been flagged in the package.

- The pages were not numbered. Tetra Tech requested that all USAF data package pages be consecutively numbered.

2.1.3.5 Analyst Training

- Analyst training documentation was not complete.

2.1.4 Resolution of Audit Findings and Deficiencies

During a debriefing meeting on 25 March, 1994, all the issues raised above were discussed in detail with ARI's laboratory management and the section supervisors; deadlines were agreed upon for the delivery of finalized SOPs, etc. prior to the receipt of any USAF samples.

ARI's corrective actions in response to the audit findings were documented and submitted to Tetra Tech

in three communications, namely, 25 April, 28 May and 3 June, 1994. A follow-up one date verification visit by Tetra Tech's Project Manager Mr. R. Carr found ARI's responses satisfactory and operational.

Tetra Tech conducted the AFCEE contract required audit of ARI, i.e. within 10 working days after receiving the first USAF samples, on 28 June-1 July, 1994. The audit essentially confirmed Mr. Carr's positive findings. Dr. G. Kassakhian, and Ms. S. Pacheco were the Tetra Tech auditors.

The laboratory SOPs, including the ones prepared or modified as a response to Tetra Tech's audit, were all submitted to the AFCEE's review as an Appendix to the QAPP. The AFCEE's Consulting Chemist Mr. Burt Harrison commented positively on the quality of the QAPP and the SOPs, and suggested only minimal edits.

Tetra Tech recommended that ARI be selected as an approved laboratory to receive environmental samples collected at the Kotzebue LRRS.

3.0 RAW DATA AND MAGNETIC TAPE AUDITS

3.1 Introduction

The purpose of raw data and magnetic tape audits is to determine the degree to which the raw data matched the reported results sent to Tetra Tech and whether the laboratory was using the Quality Control (QC) criteria stated in the QAPP Supplement during data reduction and reporting. The Magnetic Tape Audit consists of the examination of organic Performance Evaluation (PE) sample results.

3.2 Organics Raw Data Audit Methodology

The following is an outline of the procedure followed to audit the organics raw data. All calculations are based on the values from the computer output of the analytical instrument used to generate the raw data. The original raw data sheets must be used and not photocopies of the raw data.

- The tuning standards for GC/MS Methods are checked for ion intensity criteria as listed in each method.
- The initial and/or continuing calibrations are checked by calculating the Calibration Check Compounds (CCC) and the System Performance Check Compounds (SPCC) for each calibration, and comparing these values to the values reported in the SDGs. They should agree within 1%.
- The Laboratory Control Samples(LCS) recoveries are calculated for 10% of the compounds and then compared to SDG percent recoveries.
- The Matrix Spike/Matrix Spike Duplicate (MS/MSD) recoveries were calculated by using values from 10% of the spiked compounds. Calculate the % RSD for the same 10% and compare to the SDG data.

- Calculate the surrogate recovery for the blank, LCS, MS/MSD and the sample the MS/MSD was derived from. Ten percent of the environmental samples should also be calculated. Compare with SDG results.

- Visually inspect the chromatograms for the blank, the low level standard, and 10% of all other runs. Look for peaks unlabeled or crossed out, get an explanation for these peaks. Check to see that the elution order is correct.

- Check that the 12 hour time clock for GC/MS methods was observed for all samples, standards, spikes and blanks.

- When the raw data match the SDG data there is no discrepancy to be reported, and the statement "The raw data support the reported results." will be used.

3.2.1 Calculation Formulas for Organic Raw Data Audit

- Response Factor = $\frac{\text{(Response of Analyte)(Conc. of Internal Standard)}}{\text{(Response of Internal Standard)(Conc. of Analyte)}}$

- % Difference = $\frac{\text{(Response Factor I - Response Factor from Daily Cal.)(100)}}{\text{Response Factor from Initial Cal.}}$

- % Relative Standard Deviation = $\frac{\text{(Std. Deviation of Response Factors)(100)}}{\text{Mean of Response Factors}}$

- % Recovery = $\frac{\text{(Measured Value for Reference Compound)(100)}}{\text{True Value for Reference Compound}}$

3.3 Inorganics Raw Data Audit Methodology

The following is an outline of the procedure followed to audit the inorganics raw data:

- Choose an SDG to review. If a PE sample was submitted to the laboratory, include its SDG in the audit.

- Obtain the raw data for the SDG of interest, including instrument printouts, strip charts and copies of analyst's notes.

- Review the SDG's laboratory case narrative. Verify any discrepancies or out of control instrumentation in the SDG and the raw data.

- Find the EPA Method SW6010 results in the SDG and the raw data package.

- Choose a sample from the SDG to review. Find the corresponding sample results in the raw data package.

- Compare the analytical results and analysis date in the SDG to the results and date from the raw data package.

- For soil samples, confirm calculations accounting for percent solids content. Confirm Matrix Spike percent recoveries and relative percent difference between MS/MSD and duplicate samples.

- Compare and confirm QC results reported in the SDG, the raw data package and the QAPP for:

    - Initial and Continuing Calibrations Verifications;
    - Initial and Continuing Calibration Blanks;
    - Matrix Spikes, Matrix Duplicates and/or Matrix Spike Duplicates;
    - Method Blanks and Laboratory Control Samples.

- Document any and all discrepancies found. Immediately contact the department manager, section manager or analyst to discuss and resolve any discrepancies found between the SDG, the raw data package and the QAPP. Completely document the resolution and/or explanation of any discrepancies.

- When all discrepancies are resolved (or none are found), repeat the review procedure for other samples in the SDG. Then repeat the review procedure for all other methods.

Acronyms used for inorganic review:

CCB: Continuing Calibration Blank
CCV: Continuing Calibration Verification
ICB: Initial Calibration Blank
ICV: Initial Calibration Verification
LCS: Laboratory Control Sample
MBAS: Methylene Blue Activated Substances
MS: Matrix Spike
MSD: Matrix Spike Duplicate
PBW: Preparation Blank, Water
TDS: Total Dissolved Solids

3.3.1 Calculations for Inorganics Raw Data Audit

Calculations for soil samples are confirmed from the raw data and the preparation log to the results reported in the SDG using the following calculation:

SDG result (mg/Kg) = instrument result (mg/L) * prep log conversion (L/g) * (1000 g/Kg)

3.4 Magnetic Tape Audit Methodology

Review all pertinent SDG data concerning the PE sample, the data files, directory files and data output files. Determine the names for the following:

- Initial Calibration with associated BFB Tune;
- Continuing Calibration(s) with associated BFB Tune(s);

- Method Blank(s);
- MS/MSD Samples;
- LCS Sample(s);
- PE Sample and any dilution(s).

For one PE Sample the minimum files needed are twenty-three. After verifying that the correct files were downloaded without corruption, the files are then renamed in order that, during manipulations for audit purposes, no original files are overwritten. Overwritten files may cause re-downloading of the magnetic tape.

At this point the data from the hard copy SDG and the results from the analyst's raw data and the downloaded computer data output files are compared to each other. Any discrepancies are noted. Assuming the Quant ID File has not changed global method parameters significantly, and the distinct and separate Calibration File Program has likewise not changed, the initial calibration data files are reprocessed and the Calibration File Program then operates on the initial calibration reprocessed data output files. Again, assuming these data output files were correctly integrated by the computer and no significant manual integration was needed, the average response factors generated by the Calibration Program are imported into the Quant ID File. For EPA Method 8260, these are the response factors for all applicable quantification, however, this is true only if the continuing calibration that is reprocessed, meets CCC and SPCC criteria. If the CCC or SPCC fail criteria, either the Initial Calibration data files or Continuing Calibration data file are wrong, or a computer/operator integration has occurred incorrectly.

If all criteria are correct, then the remaining data files are reprocessed and the resulting data output files are compared to the reported SDG results. *These are the critical values that the tape audit verifies. Any discrepancies are noted and are identified as issues that need to be resolved.*

3.5 Raw Data Audit Summary

The Magnetic Tape and 5% Raw Data Audit of ARI, Seattle, Washington, was conducted on 27-30 September, 1994. At the time of the audit, ARI had already produced a total of 7 SDGs for the RI/FS at the Kotzebue LRRS.

The purpose of this audit was to determine the degree in which the raw data matched the reported results sent to Tetra Tech in SDG H686 (Inorganics and AK 102 Methods only) and the Performance Evaluation (PE) Sample in SDG H753 (All Organic and Inorganic Methods).

3.5.1 List of Auditors and ARI Personnel at the Orientation Meeting (27 September 1994)

Tetra Tech, Inc. Auditors: Ms. Lisa L. Arrasmith, Data Auditor, (San Bernardino, California)
Mr. Michael Wilson, Auditing Chemist, (San Bernardino, Califorina)

ARI Personnel: Mr. John Hicks, Project Manager
Ms. Michelle Turner, Manager, Quality Assurance
Ms. Suzanne Kitwin, Quality Assurance Coordinator

Orientation Meeting: 10:30 am, Tuesday, 27 September 1994.

3.5.2 Organics Audit Results

3.5.2.1 Organochlorine Pesticides and Polychlorinated Biphenyls (EPA Method 8081)

Analyst Interviewed: Mr. Peter Kepler

After reviewing several SDGs, six data quality issues were identified which required resolution. These issues and their explanations were as follows:

- Use of the "Y" qualifier which increased PQLs

  Due to large concentrations of hydrocarbon contamination which eluted across retention time windows for several pesticides, the laboratory compensated for this background interference by increasing the PQL and flagging it with the "Y" qualifier. However, this practice is difficult to defend analytically since it is subjective in nature, and not addressed by EPA Method 8081.

  Qualifying the PQL, may give the appearance that the lab is relinquishing its responsibility to determine low level concentrations of Pesticides and Polychlornated Biphenyl (PCB) analytes. In addition, the Air Force's database format is incompatible with increased PQLs for individual analytes.

  After talking to the laboratory, it was agreed that the "Y" qualifier would be replaced with a "Z" qualifier. The "Z" qualifier impacts the result only and does not raise the PQL. In a Memorandum of Understanding (MOU) document which was authorized and signed by Mr. Roderick Carr (Project Manager, Tetra Tech, Inc.), Mr. Michael Wilson (Auditor, Tetra Tech, Inc.), and Mr. John Hicks (Project Manager, Analytical Resources, Inc.), the "Z" qualifier was defined and an agreement was reached.

- Use of the "X" qualifier which had two contradicting definitions

  In a similar situation as with the "Z" qualifier, the "X" qualifier is used to denote results which, in the opinion of the analyst, are not true hits for target analytes, and are artifacts due to hydrocarbon contamination. However, the "X" qualifier is used when definite peaks in the correct retention time window, on both columns, are observed but peak areas and/or peak shapes between each column are not consistent with standard values. The use of the "X" qualifier seems appropriate in these situations where heavy contamination exists. However, the case narrative gives one definition and the report forms give another definition. The case narrative definition is the correct definition.

- Large variations in analyte concentrations between dilutions

  When target analytes are detected at concentrations above the calibration range, a dilution is needed to bring the concentration back into the calibration range. Other target analytes detected which were not overrange are again detected in the dilution analysis, however the concentration calculated from the dilution shows a large increase. This increase is due to

quantitation inaccuracy at the bottom of the calibration range. This relatively small quantitation error is then multiplied by the dilution factor which produces the large error reported on the data sheets. However, this issue should not be a problem since those analytes that caused a sample to be run at dilution due to their overrange concentration results, should be the only valid values taken from a diluted run.

- Lack of Gel Permeation Clean-up for contaminated samples

  Gel Permeation Clean-up (GPC) is used to reduce the amount of high molecular weight compounds, such as resins or polymers, that may interfere in an analysis. This type of clean-up is usually associated with soil extracts. The soil samples for this project were contaminated with low molecular weight compounds such that GPC has little effect on reducing interfering contamination. Since several samples were subjected to GPC and showed no effect in reducing contamination, this clean-up method was halted. The normal Florisil clean-up was used on contaminated samples as per the method.

- Apparent blank contamination requiring qualifiers

  On occasion, the blank showed some contaminations which were qualified with the "X" qualifier, which indicates the interferences are not target analytes. The method does not require a flat baseline for the blank, but does require the absence of target analytes. Therefore, the lab is compliant with method blank requirements.

- Surrogate control limits differ between QC and environmental samples

  For this method the surrogate control limits for the blank and laboratory control samples (LCS) are different than the surrogate control limits for the environmental samples. It would normally be expected that the blank and LCS surrogate control limits would show tighter values given the reagent water matrix. However, the opposite is true and the apparent reason being the smaller population of QC data points relative to the much larger population of environmental data points, has an inherently lower confidence level which translates to wider limits.

Conculsions

The raw data for EPA Method 8081 matched the reported results for the SDG H753 P.E. sample. No certified analytes were missed, and after inspection of the raw data, all calculations and use of the "X" qualifier were correct and justified.

3.5.2.2 Volatile Organic Compounds (EPA Method 8260)

Analyst Interviewd: Ms. Jane Alexander

During audit preparation several issues came to light which needed resolution. These issues are as follows:

- Use of the "Y" qualifier which increased PQLs

Due to large concentrations of hydrocarbon contamination which eluted across retention time windows for several volatile compounds, the laboratory compensated for this background interference by increasing the PQL and flagging the PQL it with the "Y" qualifier. However, this practice is difficult to defend analytically since it is subjective in nature, and not addressed by EPA Method 8260. The usual protocol for dealing with contaminated samples or extracts suggests the sample should be diluted since no column clean-up is used for this method. Qualifying the PQL may give the appearance that the lab is relinquishing its responsibility to determine low level concentrations of volatile analytes. In addition, the USAF's database format is incompatible with increased PQLs for individual analytes.

After talking to the laboratory, it was agreed that the "Y" qualifier would be replaced with a "Z" qualifier. The "Z" qualifier impacts the result only and does not raise the PQL.

- Use of the "X" qualifier which had two contradicting definitions

  The resolution of this issue was similar to the one discussed above for EPA Method 8081.

- Surrogate control limits differ between QC and environmental samples

  For this method the surrogate control limits for the blank and laboratory control samples (LCS) are different than the surrogate control limits for the environmental samples. It would normally be expected that the blank and LCS surrogate control limits would show tighter values given the reagent water matrix. However, the opposite is true and the apparent reason being the smaller population of QC data points relative to the much larger population of environmental data points, has an inherent lower confidence level which translates to wider limits.

Conclusion

The raw data for EPA Method 8260 matched the reported results for the SDG H753. One certified analyte was missed and during the magnetic tape audit the reason was clearly determined to be analyst oversight. A discussion of this error is contained in the Magnetic Tape Audit Findings section 3.5.4 of this report.

3.5.2.3 Semi-Volatile Organic Compounds (EPA Method 8270)

Analyst Interviewed: Miss Liz Anderson

During audit preparation several issues came to light which needed resolution. These issues are as follows:

- Absence of GPC clean-up for highly contaminated samples

  Since several samples were subjected to GPC and showed no effect in reducing contamination, this clean-up method was halted. Failing GPC clean-up, contaminated extracts for EPA Method 8270 are usually diluted.

- Use of the "Y" qualifier which increased PQLs

This issue was resolved in a manner identical to those for th EPA Methods 8081 and 8260 above.

- Use of the "X" qualifier which had two contradicting definitions

  The resolution of this issue was similar to the one discussed above for EPA Method 8081.

Conclusion

The raw data matched the reported results in SDG H753. No certified analytes were missed.

3.5.3 Inorganics Audit Results

3.5.3.1 Metals (EPA Method 6010 ICP)

SDG Reviewed: H686

Samples reviewed:
H686L = SS07-SD1-01 (soil)
H686N = SS07-SD3-01 (soil)
H686E = SS07-SW3-01 (total)
H686F = SS07-SW3-01 (dissolved)

All values checked were found to correspond.

Calibration Verifications (ICVs & CCVs) and Calibration Blanks (ICBs & CCBs):

Calibration results are not included in level I data packages, however, the calibrations were in the raw data at the correct frequency. Any out of control calibrations and their associated samples were rerun as noted in the SDG case narratives.

Method Blanks (PBW, PBS): All values checked were found to correspond.

Matrix Spike/Matrix Spike Duplicates/Matrix Duplicates (MS/MSD/MD) :
All values checked were found to correspond.

Laboratory Control Sample (LCS): All values checked were found to correspond.

Although all the raw data values checked were found to correspond to the values in the SDG, there were several discrepancies within the SDG and the QAPP.

1. The manganese PQL was reported on page 167 as 0.00 mg/L. The MDL study included in the SDG for ICP metals in water dated 5/94 indicates a manganese PQL of 0.01 mg/L. This discrepancy appears to be a typographical error. Replacement pages from ARI would be sufficient to correct the problem with no impact to data quality.

2. Thirteen dissolved metal PQLs are not consistent with the total metals, the QAPP or MDL study included in the SDG for ICP metals in water dated 5/94. This discrepancy could result in inconsistent "J" flagging of the data in Tetra Tech's Level I review. ARI should review their data packages and submit replacement pages for all of the affected data.

3.5.3.2 Metals (EPA Method 7000 Series)

SDGs Reviewed: H686

Samples reviewed: H686L = SS07-SD1-01 (soil)
H686N = SS07-SD3-01 (soil)
H686E = SS07-SW3-01 (total)
H686F = SS07-SW3-01 (dissolved)

All values checked were found to correspond.

Calibration Verifications (ICVs & CCVs) and Calibration Blanks (ICBs & CCBs):

Calibration results are not included in level I data packages, however, the calibrations were in the raw data at the correct frequency. Any out of control calibrations and their associated samples were rerun as noted in the SDG case narratives.

Method Blanks (PBW, PBS): All values checked were found to correspond.

Matrix Spike/Matrix Spike Duplicates/Matrix Duplicates (MS/MSD/MD) :
All values checked were found to correspond.

Laboratory Control Sample (LCS): All values checked were found to correspond.

Although all the raw data values checked were found to correspond to the values in the SDG, there were discrepancies within the SDG and the QAPP. The lead PQL in the SDG is 0.006 mg/L, however, the lead PQL in the QAPP and the MDL study included in the SDG is 0.004 mg/L. This discrepancy could result in inconsistent "J" flagging of the data in Tetra Tech's Level I review. ARI should review their data packages and submit replacement pages for all of the affected data.

3.5.3.3 Diesel Range Hydrocarbons (Alaska Method AK102)

SDGs Reviewed: H686

Samples Reviewed:	H686E	SS07-SW3-01
	H686D	SS07-SW2-01
	H686C	SS07-SW1-01
	H686J	SS12-SW3-01
	H686H	SS12-SW1-01 (and dilution)
	H686I	SS12-SW2-01 (and dilution)
	H686A	SS12-SW4-01

Calibration Verifications (ICVs & CCVs) and Calibration Blanks (ICBs & CCBs):

Calibration results are not included in Level I data packages, however, the calibrations were in the raw data at the correct frequency. Any out of control calibrations and their associated samples were rerun as noted in the SDG case narratives.

Method Blanks (PBW, PBS): All values checked were found to correspond.

Matrix Spike/Matrix Spike Duplicates/Matrix Duplicates (MS/MSD/MD) : All values checked were found to correspond.

Laboratory Control Sample (LCS): All values checked were found to correspond.

Surrogate Recoveries: The percent recoveries found in the SDG were calculated correctly.

The aqueous surrogate spike concentration in the raw data is 0.045 mg/L, however the spiking concentration listed in the QAPP or the 7 July 1994 SOP is 0.075 mg/L. The analyst indicated that the QAPP and the SOP both need to be revised and that the 0.045 mg/L spiking concentration listed in the raw data is correct.

Although the raw data values checked were found to correspond to the values in the SDG, there were discrepancies within the SDG and the QAPP. The diesel PQL in the SDG was 0.11 mg/L for water and 7.1 mg/Kg for soil, however, the QAPP and the MDL study included in the SDG list a diesel PQL of 0.2 mg/L for water and 3 mg/Kg for soil. This discrepancy could result in inconsistent "J" flagging of the data in Tetra Tech's Level I review. ARI should review their data packages and submit replacement pages for all of the affected data.

3.5.4 Magnetic Tape Audit of Performance Evaluation Sample H753

A Magnetic Tape Audit for the PE sample H753 was conducted on-site for EPA Methods 8260 and 8270. The Magnetic Tape Audit was initiated by downloading the data from the magnetic tape to the hard drive of the Finnigan Incos 50 MS Data System Computer. The tape audit was focused on EPA Method 8260 results, since an error had been detected only in this method and not in EPA Method 8270 results.

Carbon Tetrachloride (CCl_4) was the analyte missed in the PE sample, H753 for Method 8260. After reloading the tape, a peak with a mass spectra consistent with and at the correct retention time for, CCl_4, was observed. At this time, the peak was manually integrated and gave a value of 17.0 ng/ml, which was exactly the certified value. A diagnostic report was generated for this run when the sample was originally analyzed, and was again generated during this audit. The diagnostic report functions in such a way as to show all ion specific area responses, within the compounds retention time window, other QC parameters not withstanding. From the diagnostic report it was verified that the CCl_4 was indeed there, however, the top of the ion peak was missed, which caused this hit to be rejected. After examining the initial diagnostic report, the same information was observed, and at this point the Analyst admitted this information had been overlooked, and took responsibility for missing this analyte.

3.5.5 Debriefing Meeting

10:30 am, Friday, 30 September 1994

Tetra Tech, Inc. Personnel:	Mr. Rodrick Carr, Project Manager (Redmond, Washington) Ms. Lisa Arrasmith, Data Auditor, Quality Assurance (San Bernardino, California) Mr. Michael Wilson, Auditing Chemist, Quality Assurance (San Bernardino, California)
ARI Personnel:	Mr. John Hicks, Project Manager Mr. Brian Beebe, Organics Supervisor Mr. Peter Kepler, GC Supervisor Mrs. Suzanne Kitwin, Quality Assurance Coordinator

Findings:

- **Organic PE Sample-** For the organic section of PE sample H753, the laboratory missed only Carbon Tetrachloride in Method 8260, the reason being an analyst oversight on the diagnostic report. There was one false positive hit detected which was acetone for Method 8260 at 16 ug/ml. However, our experience with this analyte in PE samples indicates, although claimed not to be a certified analyte, is indeed present in the PE sample as a contaminant.

- **Inorganic PE Sample-** For the inorganic section of PE sample H753, no analytes were missed, although there were three false positive detections. The three false positives were Calcium at 0.06 mg/L, Potassium at 0.7 mg/L, and Sodium at 0.2 mg/L with Calcium and Sodium also detected in the blank. Calcium was detected below the Practical Quantitation Limit (PQL) and Sodium was detected at the PQL. The evidence indicates these are laboratory contaminants and not from the PE sample. Potassium was detected above the PQL but not in the blank, however Potassium is a ubiquitous compound and with the data available, no determination of the source can be elucidated.

- **Qualifier Agreements-** The qualifiers "Y" and "X" have been addressed and agreements were made to smooth out any data quality misunderstandings that may have developed due to their use.

- **EPA Method 6010** - All raw data values checked were found to correspond to the values reported in the SDG. However, there were several discrepancies within the SDG and the QAPP. For example, the manganese PQL was reported on page 167 as 0.00 mg/L. The MDL study included in the SDG for ICP metals in water dated 5/94 indicates a manganese PQL of 0.01 mg/L. Thirteen dissolved metal PQLs are not consistent with the total metals, the QAPP or MDL study included in the SDG for ICP metals in water dated 5/94.

- **EPA Method 7000s** - All raw data values checked were found to correspond to the values reported in the SDG. The discrepancies within the SDG and the QAPP are the lead PQL in the SDG is 0.006 mg/L, however, the lead PQL in the QAPP and the MDL study included in the SDG is 0.004 mg/L.

- **Method AK 102 Diesel Range Hydrocarbons** - The aqueous surrogate spike concentration in the raw data is 0.045 mg/L, however the spiking concentration listed in the QAPP or the 7 July 1994 SOP is 0.075 mg/L. The analyst indicated that the QAPP and the SOP both need to be revised and that the 0.045 mg/L spiking concentration listed in the raw data is correct.

Conclusions and Recommendation

- *Overall, ARI produces high quality chemical analyses. The data ARI generates are indicative of the high standards of integrity the analysts demonstrated during the audit.*

- *Although highly contaminated samples were sent for analysis to ARI, the laboratory has consistently given results that show good laboratory practices were being followed.*

- *When the analysts make procedural changes to maintain the highest level of data integrity, SOPs need to be updated immediately and submitted to Tetra Tech so that the QAPP too can be updated immediately.*

- *ARI should submit replacement pages for the detection limit discrepancies noted in order to prevent erroneous "J" flagging in the Tetra Tech data review process and eliminate future confusion, while preserving data quality.*

Overall Analytical Resources Inc. has performed within the scope of work prescribed for this work effort. At this time ARI's deliverables are expected to meet all data quality objectives.

4.0 LABORATORY PERFORMANCE EVALUATION SAMPLES

Performance evaluation (PE) samples are sent to subcontracting analytical laboratories to assess their analytical performance, precision and accuracy. The PE sample is a prepared sample with known certified concentrations of selected analytes which can be compared to the laboratory analytical results.

The samples were prepared by the nationally reputable commercial vendor, Environmental Resource Associates (ERA) of Arvada, Colorado. The PE sample contained a predetermined number and concentration of analytes for each method. The complete results of these PE samples are on file and archived at Tetra Tech's Redmond, Washington and San Bernardino, California offices.

Tetra Tech contracted ERA to prepare PE samples in Tetra Tech sample containers. Theses were received by Tetra Tech on 12 July, 1994. The PE samples were then relabeled with Kotzebue LRRS labels and shipped to ARI together with actual environmental samples from Kotzebue LRRS.

On July 14, 1994, ARI received the PE samples (ERA Lot No. 0711-94-02) and analyzed them by the following methods:

- Alaska AK102 for Diesel Range Hydrocarbons;
- EPA Methods 6010 and 7000 series for Metals;
- EPA Method 8081 for Pesticides and PCBs;
- EPA Method 8260 for Volatile Organics; and
- EPA Method 8270 for Semivolatile Organics.

The PE samples were received in good condition and assigned ARI laboratory identification as follows:

Kotzebue Sample ID	Laboratory Sample ID	Analytical Method
AOC10-SB1	H753D	AK102
AOC10-SW1	H753O	EPA 6010, 8081, 8260, 8270

After reviewing the reported results from ARI and the certified values with acceptance limits from ERA, the laboratory appears to have failed only two analytes. The percent correct were calculated for each method and tabulated below:

Analytical Method	Percent Correct	Number of Analytes Correctly Identified/Total Analytes
AK102	100%	1/1
EPA 6010	100%	20/20
EPA 8081	100%	1/1
EPA 8260	87%	13/15
EPA 8270	100%	21/21

Concerning the EPA Method 8260 PE sample results, two errors were detected. The first error was the false positive detection of acetone at 16 ug/L. Acetone was not a certified analyte, as stated by the vendor, and may be a contamination from the laboratory, however acetone was not detected in the method blank. The laboratory could not determine a reason for the acetone presence.

The second error concerned carbon tetrachloride. Carbon tetrachloride (CCl_4) was the analyte missed in the PE sample, H753 for Method 8260. After reloading the magnetic tape onto the system computer, the original raw data was examined. A peak with mass spectra consistent with and at the correct retention time for, CCl_4, was observed. At this time, the peak was manually integrated and gave a value of 17.0 ng/ml, which was exactly the certified value. A diagnostic report was generated for this run when the sample was originally analyzed, and was again generated during the audit. The diagnostic report functions

in such a way as to show all ion specific area responses, within the compounds retention time window, other QC parameters not withstanding. From the diagnostic report it was verified that the CCl_4 was indeed there, however, the top of the ion peak was missed, which caused this hit to be rejected. After examining the initial diagnostic report, the same information was observed, and at this point the Analyst admitted this information had been overlooked, and took responsibility for missing this analyte.

Conclusion:

For each method, except EPA Method 8260, the laboratory has performed adequately with a percent correct (within the certified acceptance limits) of 100%. However, the results for the volatile organic analysis EPA Method 8260 indicate the percent correct to be 87%. Normally, 90% is required to be the minimum acceptable value to pass the PE results criteria. However, due to the possibility that the false positive detection of acetone may be due to vendor contamination, since no acetone was detected in the method blank or other samples in the batch, 87% passes in this situation. Therefore, ARI performance was considered to have passed the overall PE results criteria.

5.0 Audits of Deliverables

5.1 Data Validation/Verification Review

The analytical data that resulted from environmental samples collected during the work effort at Kotzebue LRRS, were reviewed against the relevant criteria specified in Tetra Tech's original Statement of Work referred to as Level I criteria, as well as those provided in Tetra Tech QA's SOP entitled "*Preliminary Draft SOP for Quality Assurance Monitoring of Data Deliverables*" (effective date 26 January, 1995). An SOP entitled "*Data Qualification Guidelines for Inorganic & Organic Data Review Level I*" (effective date 7 March, 1994) was used to evaluate the data by Tetra Tech's Data Management Group. After reviewing the SDG against Level I SOP criteria, the Data Management Group compiles the necessary qualifiers and descriptors in tandem with input into the Informal Technical Information Report (ITIR).

Quality Assurance reviews the data verification/validation effort at two levels:

1. The qualifiers and descriptors applied to the sample results found in the ITIR; and
2. The qualifiers and descriptors found in the copy of the Sample Delivery Group (SDG) laboratory deliverable.

Compliance with the Level I Verification SOP included a review of the following technical components:

- Analytical holding times;
- Method and field blank results;
- Matrix spikes/matrix spike duplicate results;
- Surrogate recovery;
- Laboratory control sample results;
- Temperature blank results;
- Duplicate environmental sample results; and
- The SDG supplied case narrative.

The QA Auditor notes the discrepancy in a memo to be forwarded to the Project Manager and Project QA/QC Manager with a copy to the Data Management Group Manager.

- Why the condition was evaluated as a discrepancy;
- Where in the validation/verification portion of the ITIR the discrepancy was found; and
- Solutions for the discrepancies.

Once the discrepancy memo was issued, QA set a date for incorporation of suggested edits, followed by a request of documentation that indicated that the discrepancies had been resolved.

5.2 ITIR Review

Tetra Tech's Data Management Group prepared the Summary of Environmental Results, Surrogate Summary and Summary of Quality Control Sample portions of the ITIR. As ITIR sections were generated, QA reviewed those sections for the following elements:

- That the MDLs and PQLs were consistent with those in the QAPP;
- Units of concentration were consistent with those in the QAPP;
- The correct presentation of sample results that required dilutions; and
- The correct presentation of sample results that required second column confirmational analysis.

Any discrepancies were noted by the QA Auditor in a memorandum to the Project Manager, Project QA/QC Manager and Data Management Group Manager. It included the following information:

- Why the condition was evaluated as a discrepancy;
- Where in the ITIR portions the discrepancy was found; and
- Solutions for the discrepancies.

Once the discrepancy memorandum is issued, QA sets a date for the incorporation of the suggested edits. For a period of time QA continues to monitor the implementation of the corrective action. All documentation of the corrective actions used by QA to resolve the discrepancy are then forwarded to the Data Management Group Manager and the Project Manager.

5.3 Installation Restoration Program Information Management System (IRPIMS) Review

Due to the restrictive nature of the IRPIMS deliverable, it was not possible for QA to review it in its final electronic deliverable state. Deliverables in a stage prior to the final one were reviewed by QA using a Tetra Tech proprietary program which provides an output on a method specific basis and is known as the "Greenbar Report". The report is reviewed against the relevant SDG for the following elements:

- Detection limits;
- Quality control limits, spiking levels and relative percent difference for duplicate samples;
- Concentrations of analytes of concern;
- Why the condition was evaluated as a discrepancy;
- Where in the "Greenbar" report the discrepancy was found; and
- Solutions for the discrepancies.

The review of the "Greenbar Report" documented the differences between the IRPIMS deliverable and the hardcopy; this information was forwarded to the Project Manager, Project QA/QC Manager and the Data Management Manager.

QA set a date for the incorporation of the suggested edits and requested documentation that the discrepancies have been resolved. For a period of time QA monitored the activity for compliance. All documentation of the corrective actions used by Tetra Tech's QA to resolve the discrepancy was forwarded to the Project Manager and the Data Management Manager.

Table II presents the QA audits performed on the Tetra Tech deliverables:

Table II
Audits of Tetra Tech Deliverables

Date Of Audit	Auditor	Type Of Audit	Quality Assurance Activities	Documentation
			Data Validation Audit	
18 January, 1995	Mr. M. Wilson	Data Validation	Audit of Level I Data Validation of SDGs H819 and H886	Letter dated 18 January, 1995, detailing findings from audit
			Third Part Validation Audit	
8 February, 1995	Mr. M. Wilson	Third Party Validation	Audit of EcoChem's 3rd Party Validation of SDG H700	Letter dated 8 February, 1995,detailing the audit findings
			IRPIMS Audit	
10 February, 1995	Ms. C. Sisco	IRPIMS	IRPIMS Review - Kotzebue LRRS SDG H569	Letter dated 14 February, 1995 detailing findings
			Compliance Monitoring	
17-18 March, 1994	Mr. M. Wilson	Compliance	Preaudit Package	QA Audit Report, 18 May, 1994
1 August, 1994	Ms. L. Arrasmith	Compliance	Initial Review of ARI'S 1st SDG	Fax dated 1 August, 1994 detailing findings
22 September, 1994	Mr. M. Wilson	Compliance	Review of Test Method 8081	Fax dated 22 September,1994 detailing Method 8081 issue clarifications

Date Of Audit	Auditor	Type Of Audit	Quality Assurance Activities	Documentation
4 October, 1994	Mr. M. Wilson	Compliance	Review of Several SDGs from ARI	Letter dated 4 October, 1994
28 October, 1994	Ms. C. Sisco	Compliance	Review of SDG H819	Fax dated 31 October, 1994 detailing findings
5 December, 1994	Ms. S. Pacheco	Compliance	Questions Regarding SDG H834	Letter dated 5 December, 1994 answering questions regarding SDG H834

5.4 Audit Summaries of Deliverables

5.4.1 Audit of Level I Data Validation

Type: Level I Data Validation Audit
Date: 18 January, 1995
Document Audited: SDGs H819 and H886
Auditor: Mr. M. Wilson

Reported Discrepancies:

- **SDG H819** - Endosulfan II was reported in the Data Management Case Narrative (DMCN) to be in the method blank, however it was not detected.
    - Under the Laboratory Control Sample (LCS) heading of DMCN, it was indicated that all recoveries met QC criteria when in fact the entire LCS (Method 8270) was invalid due to the sample running out the 12 hour requirement.
    - Under the General Comments heading of the DMCN the following statement was written "Validation of environmental samples is based on results from the primary column". Since this quote only pertains to Method 8081 samples, the statement was incorrect. The correct statement should have read, "*Quantitation of the environmental results are based on the value from the primary column*". **This item needed global correction.**
    - The DMCN stated "No MS/MSD data were reported due to insufficient sample volume". There needs to be additional information included on why there was no LCS/LCSD analyzed, since this was the corrective action for insufficient sample amounts.
- **SDG H886** - Results from samples that saturated the detector, where the value in the results column was the letter "**S**", had been qualified **J**. In fact, the letter "**S**" should not have been qualified, since it is not a numerical value.
    - The laboratory case narrative (LCN) states that the LCS for EPA Method 8270 ran outside the 12 hour requirement. The DMCN does not indicate this and states the LCS met QC requirements.
    - EPA Method 8081 data had been qualified **J** to indicate doubt as to the analyte's authenticity. These data had been qualified incorrectly since **J** had nothing to do with authenticity.

Corrective Action: It was recommended that the inconsistent and incorrect validation be corrected.

Resolutions: *The auditor concluded that the errors and confusing format of the DCMN may not impact risk assessment parameters. The discrepancies were reported to the Data Management and Project Managers.*

5.4.2 Audit of Third Party Data Validation of a Level II SDG

Type: Third Party Data Validation of a Level II SDG
Date: 8 February, 1995
Document Audited: SDG H700
Third Party Validator: EcoChem, Seattle, Washington
Tetra Tech Auditor: Mr. M. Wilson

Reported Discrepancies: **Samples Background-SS3-01, Background-SD3-01, Background-SS2-01, and Background-SD2-01.**

- The samples were contaminated with known hydrocarbon residues which resulted in matrix interferences. The latter will occasionally produce false positive results due to coincidental detection of non-target compounds on both columns.
- These matrix interferences may have resulted in poor peak resolution in some cases.
- The Matrix Spike and Matrix Spike Duplicate (MS/MSD), which was performed on sample Background-SD2-01, showed elevated recoveries due to matrix interferences, however, the precision is acceptable as demonstrated by the Relative Percent Difference (RPD). These facts show adequate pesticide sensitivity on top of non-target interference.
- The baseline drift which is noticeable in all chromatograms, is a common effect caused by the temperature programming which changes the dynamic equilibrium inside the electron capture detector, resulting in drift. Since the drift is observed in all pesticide chromatograms, including instrument blanks for which matrix interferences do not apply, the matrix effected baseline drift theory has not been proven for these samples.
- The possibility of false negative determinations due to negative peak influences would be extremely rare.

Conclusion: *The pesticide data in SDG H700, produced by ARI, had been validated by EcoChem, Inc. using all the raw data associated with the analysis. The validation conducted was found to be consistent with good validation practices and the resulting qualifications were justified with the exception of the qualified PQLs for the samples Background-SS3-01, Background-SD3-01, Background-SS2-01, and Background-SD2-01. Based on all available information discussed above and in a letter dated 8 February, 1995, to Mr. Rick Osgood, Operations Manager,* ***it appears that the Background samples may have been overqualified.***

5.4.3 IRPIMS Audit

Type: IRPIMS Review
Date: 10 February, 1995
Document Audited: Kotzebue LRRS
Document Audited: SDG H569 and its "Greenbar Report"
Auditor: Ms. C. Sisco

Reported Discrepancies:

- EPA Method 8260 - Sample ID A0C5-SS1 - Surrogates were not reported for this sample ID.
- Analyte - Carbon Disulfide - The SDG is reporting ND while the Greenbar Report is reporting 0.
- EPA Method 8270 - Analyte - 2-Nitroaniline - The SDG is reporting ND while the Greenbar Report is reporting 2.2
- EPA Method 6010 - Analyte - Antimony - The SDG is reporting ND while the Greenbar Report is reporting 0.

Corrective Action: These minor discrepancies noted did not affect the overall quality of the deliverable or impact the Data Quality Objectives. Data Management to correct discovered errors.

Resolution: *The Project Manager and Projec QA/QC Manager were informed of the discrepancies. Data Management corrected the erroneous entries.*

5.4.4 Compliance Monitoring

5.4.4.1 Preaudit Package Review

Type: Preaudit Package Review
Date: 17-18 March, 1994
Document Audited: Preaudit Package provided by ARI
Auditor: Mr. M. Wilson

Reported Discrepancies:

- MDL studies reported without the method designation information (EPA Methods 8240 and 8270).
- EPA Method 8240 MDL shows Bromoform to be quantitated under the wrong internal standard.
- There are several instances where the units associated with results are not indicated.

Corrective Action: The observed deficiencies were reported to the Project Manager and ARI's

Project Manager.

5.4.4.2 SDG Review

Type: SDG Review
Date: 1 August, 1994
Document Audited: 1st Sample Delivery Group (SDG) received from ARI
Auditor: Ms. L. Arrasmith

Reported Discrepancies:

- The pesticide analysis (EPA Method 8081) report pages did not include client sample identifications.
- Descriptors or Qualifiers used throughout the SDG were not clearly defined, except for method AK102.
- Surrogate percent recovery control limits should be included on every report page for every applicable method.
- The MS/MSD QC pages should include the control limits as listed in the QAPP.
- The Form I report pages for MS/MSD do not actually report the values recovered.
- The report pages for EPA Method 8260 and Alaska AK102 should read "PQL" instead of "OL".
- Several samples in several methods (A0C1-SB9-1.0 and A0C05-SB5-2.0 in EPA Method 8270 for example) were rerun at 5 and 10 times dilutions, however, it is not clear that the original sample exceeded the calibration range in any way.

Resolutions: *The discrepancies were reported to the Project Manager, who in turn discussed them with ARI's Project Manager. Subsequent SDGs indicated that the above listed issues were rectified in a satisfactory manner.*

5.4.4.3 EPA Method 8081 Compliance Audit

Type: EPA Method 8081 Audit
Date: 22 September, 1994
Document Audited: Various SDGs from ARI
Auditor: Mr. M. Wilson

Reported Discrepancies:

- For the electronic deliverables three values are to be reported. These values are column #1 results, column #2 results, and the primary column result. The laboratory must designate the DB5 column as the primary column in the

electronic format. Thus, column #1 results and the DB5 column results will be identical.

- The **X** qualifier should not be used in the electronic deliverable since this would be inconsistent with the client's database format.

Resolutions: *The findings were reported to the Project Manager and ARI's Project Manager for discussion and resolution.*

5.4.4.4 Use of Qualifiers Generated by ARI for its SDGs

Type: Use of Qualifiers Generated by ARI for its SDGs
Date: 4 October, 1994
Document Audited: Various SDGs from ARI
Auditor: Mr. M. Wilson

Reported Discrepancies:

- Using qualifiers which raise PQL for individual analytes and qualifiers with ambiguous definitions.

Resolutions: *ARI agreed to alleviate data quality issues which are incompatible with data quality objectives.*

5.4.4.5 QAPP/SDG Compliance Monitoring

Type: QAPP/SDG Compliance Monitoring
Date: 28 October, 1994
Document Audited: Kotzebue LRRS SDG H819 from ARI versus QAPP dated 26 July, 1994
Auditor: Ms. C. Sisco

Reported Discrepancies:

- EPA Method 8081 - MDL study for DB5, both Soil and Water results are missing the following analytes: Endolsufan I and Endosulfan Sulfate.
- EPA Method 8260 - MDL study for both Soil and Water results are missing the following analytes: Bromoform and Bromochloromethane.
- EPA Method 8270 - Analytes bis(2-Chloroisopropyl) ether is reported in the QAPP but not reported on the MDL study or on the Analysis Data Sheets pages for EPA Method 8270.

Resolutions: *The discrepancies were reported to the Project and Data Management Managers.*

5.4.4.6 Sample Delivery Group (SDG) Review

Type: Sample Delivery Group (SDG) Review
Date: 5 December, 1994
Document Audited: SDG H834 from ARI

Auditor: Ms. S. Pacheco

Reported Discrepancies:

- The Alaska Method AK101 for Gasoline method blank was contaminated.
- When the result of the analysis is ND, it is inappropriate to use the prevalent ARI case narrative sentence "In the opinion of the analyst, the pattern of the sample was NOT a match for gasoline" .

6.0 Quality Assurance Project Plan Variances for Analytical Resources, Inc. - Seattle Regional Laboratory, Seattle, Washington

- The AFCEE did not approve the request of deleting 1-Chlorohexane and Trichloropropane from EPA Method 8260 unless the analyte list for the QAPP is amended with the concurrence of the Alaska Department of Environmental Conservation (ADEC) and EPA.
- The AFCEE did not approve increasing the PQL for Zinc. The AFCEE recommended that the laboratory repeat their Method Detection Limit studies and make corrective actions to meet the AFCEE reasonable requirement of 0.02 mg/L for ICP analysis for water.
- The AFCEE determined that no variance was required for Cadmium in water by ICP since Analytical Resources, Inc. (ARI) can achieve an PQL of 0.02 mg/L and the Handbook Limit is 0.04 mg/L.
- The AFCEE did not approve increasing the PQL of Aroclor (PCB-1221) from 1 ug/L to 1.1 ug/L on the confirmation column. The confirmation column should, at minimum, achieve the same PQL as the first column.

APPENDIX A

FIELD ACTIVITIES
RECORD KEEPING AUDIT CHECKLIST

Contract: _____ Date: _____

Site: _____ Auditor: _____

Yes	No	Location of Record Comments	Record Keeping Requirement
			EQUIPMENT CALIBRATION
____	____	_____	1. FID or PID pre calibrated?
____	____	_____	post calibrated?
		_____	Standards used _____
____	____	_____	2. pH Meter pre calibrated?
____	____	_____	post calibrated?
		_____	Standards used _____
		_____	3. Conductivity Meter
____	____	_____	pre calibration check?
____	____	_____	post calibration check?
			Standards used _____
____	____	_____	4. Turbidimeter standardization check?
		_____	
____	____	_____	5. CGI Meter pre calibration?
____	____	_____	post calibration?
			Standards used _____
			FIELD RECORDS

Yes	No	Location of Record Comments	Record Keeping Requirement
____	____	_____	1. Name & Address of Field Contact on log book cover.
____	____	_____	2. Date of Entry a) Log Book b) FDS c) Others: Specify 1)_____ 2)_____
____	____	_____	3. Names and affiliations of personnel on site.
____	____	_____	4. Description of Field Activities.
____	____	_____	5. Weather conditions.
____	____	_____	6. Location of activity.
____	____	_____	7. Observations of activities environment.
____	____	_____	8. Identification of Sampling Device.

Yes	No	Location of Record Comments	Record Keeping Requirement
____	____	_____	9. Any field measurements taken.
____	____	_____	10. Sequence of sample collection.
____	____	_____	11. Type of Sample Matrix.
____	____	_____	12. Date and Time of sample collection.
____	____	_____	13. Field sample I.D.#.
____	____	_____	14. Sample distribution.
____	____	_____	15. Samplers name.
____	____	_____	16. Sample type (replicate, QA/QC, etc.)
		_____	17. For Groundwater:
____	____	_____	a) Were samples filtered?
____	____	_____	b) Screen type & Size noted?
____	____	_____	c) Preservatives used noted?
____	____	_____	18. Each page in log book signed or initialled?
____	____	_____	19. Are corrections correctly lined out and initialled?
____	____	_____	20. If information is not in log book, It is referenced to another log book?
			PHOTOGRAPHS
____	____	_____	1. Roll and Frame number recorded.
____	____	_____	2. Time and date recorded.

Yes	No	Location of Record Comments	Record Keeping Requirement
____	____	_____	3. Photographer noted.
____	____	_____	4. Location of photograph noted.
____	____	_____	5. Subject of photograph noted.
____	____	_____	6. Significant or relevant features noted.
____	____	_____	7. Names of personnel in photograph, if any.

Additional comments:

ENVIRONMENTAL SOIL SAMPLING
SYSTEMS AUDIT CHECKLIST

Contract: _____ Date: _____

Site: _____ Auditor: _____

Yes	No	Comments	Operation
			PRESAMPLING OPERATIONS
____	____	_____	1. Sample type? (specify)
____	____	_____	2. Qualified personnel?
____	____	_____	3. Adequate facilities, equipment, and supplies?
____	____	_____	4. Decontamination performed according to current procedure? (Soap, potable water, Type II reagent grade water, methanol, hexane.)
____	____	_____	5. Sampling locations properly specified?
____	____	_____	6. Copy of task instructions or QAPP? Revision #_____
____	____	_____	7. Copy of daily sampling schedule?
			SAMPLING OPERATIONS

Yes	No	Comments	Operation
____	____	_____	1. Samples collected at proper sampling locations?
____	____	_____	2. Appropriate sample technique used to obtain representative sample?
____	____	_____	3. Appropriate techniques used to ensure sample integrity and avoid contamination?
____	____	_____	4. At least 10% replicate/duplicate samples collected?
____	____	_____	5. Sufficient volume of sample collected?
____	____	_____	6. Suitable sample container used for storage?
____	____	_____	7. Sample containers properly labeled?
____	____	_____	8. OVA measurements taken and recorded prior to sampling and every 30 minutes during sampling?
			<u>POST-SAMPLING OPERATIONS</u>
____	____	_____	1. Decontamination performed according to current procedure? (Soap, potable water, Type II reagent grade water, methanol, hexane.)
____	____	_____	2. Sampling date, time, and location properly recorded in logbook?

Yes	No	Comments	Operation
____	____	_____	3. Suitable sample shipping container label used?
____	____	_____	4. Chain-of-Custody form filled out?
____	____	_____	5. Chain-of-Custody seal affixed to sample container?
____	____	_____	6. Refrigerated sample storage?
____	____	_____	7. Overall recordkeeping procedure adequate?

Additional comments:

_____

_____

_____

_____

_____

_____

_____

ENVIRONMENTAL WATER SAMPLING SYSTEMS AUDIT CHECKLIST

Contract: _____ Date: _____

Site: _____ Auditor: _____

Yes	No	Comments	Operation
			PRESAMPLING OPERATIONS
____	____	Name 1._____ 2._____ 3._____	1. Qualified personnel?
		_____	2. Sample type? (specify)
____	____	_____	3. Adequate facilities, equipment, and supplies?
____	____	_____	4. Sampling locations properly specified?
____	____	_____	5. Copy of task instructions or QAPP? Revision #_____
____	____	_____	6. Copy of daily sampling schedule?
			SAMPLING OPERATIONS
____	____	_____	1. Least expected contaminated well sampled first?
____	____	_____	2. Samples collected at proper sampling locations?
____	____	_____	3. Breathing Zone and Well Bore monitored with a FID or PID and LEL meter respectively?
____	____	_____	4. Rinse probe with DI H_20 prior to placement?

Yes	No	Comments	Operation
____	____	_____	5. Static water level measured prior to purging?
____	____	_____	6. Each well volume measured for temperature, specific conductance and pH?
____	____	Well # _____ Gallons purged _____	7. Purge appropriate volume prior to sampling (3 borehole volumes).
____	____	_____	8. Appropriate sample technique used to obtain representative sample?
____	____	_____	9. Appropriate techniques used to ensure sample integrity and avoid contamination?
____	____	_____	10. All purging and sampling equipment decontaminated prior to purging or sampling (between each well)?
____	____	_____	11. Purged water measured and recorded?
____	____	_____	12. pH of preserved samples (excluding VOC samples) verified by pouring small amount of sample on to pH paper?
____	____	_____	13. Are VOC samples collected first? and check for air bubbles?
____	____	_____	14. At least 10% duplicate samples collected?
____	____	_____	15. Sufficient volume of sample collected?
____	____	_____	16. Suitable sample container used for storage?
____	____	_____	17. Sample bottles properly labeled?
____	____	_____	18. Sampling data sheet completed in a timely manner? (Within five minutes of activity.)

Yes	No	Comments	Operation
____	____	_____	19. OVA measurements taken and recorded prior to sampling and every 30 minutes during sampling?
			POST-SAMPLING OPERATIONS
____	____	_____	1. Decontamination performed according to current procedure? (Soap, potable water, Type II reagent grade water, methanol, hexane.)
____	____	_____	2. Well capped immediately following removal of pump and prior to decontamination?
____	____	_____	3. Sampling date, time, and location properly recorded in logbook?
____	____	_____	4. Suitable sample shipping container label used?
____	____	_____	5. Chain-of-Custody form filled out?
____	____	_____	6. Chain-of-Custody seal affixed to sample container?
____	____	_____	7. Refrigerated sample storage?
____	____	_____	8. Overall recordkeeping procedure adequate?

Additional comments:

_____

_____

_____

_____

_____

_____

TETRA TECH, INC. SAN BERNARDINO, CALIFORNIA

STANDARD OPERATING PROCEDURE

PERFORMANCE EVALUATION SAMPLES

Tt-QA SOP No. QA001-93

APPROVALS		Date
Auditor	Ms. Lisa L. Arrasmith	
Manager, Quality Assurance	Dr. Garabed Kassakhian	
Program Manager, Quality Assurance	Dr. William Brownlie	

Effective Date _____ Revision _____

LABORATORY PERFORMANCE EVALUATION SAMPLE

STANDARD OPERATING PROCEDURE

Performance Evaluation (PE) samples are sent to subcontracting analytical laboratories to assess their analytical performance, precision and accuracy. The PE sample is a prepared sample with known certified concentrations of selected contaminants which can be compared to the analytical results. To achieve maximum benefit of PE sample results, it is best if the PE sample is sent at, or as near as possible, to the beginning of a project.

There are three types of PE samples:

1. **USEPA PE Samples**

   These samples are prepared by the EPA, and are submitted to the laboratory through the contractor. An identical sample is analyzed by an EPA referee laboratory and the results of the latter are compared to those obtained by the subcontracting laboratory and the true values of the prepared PE samples. The results may or may not be disclosed by the EPA; if disclosed, the results may be as late as 10 to 14 months. The PE samples are supplied by the EPA *gratis*, and the Client bears only the direct cost of analysis, and contractor handling of the samples and paperwork.

2. **Commercial Off-the-shelf PE Samples**

   These are obtainable from nationally reputable commercial outlets, such as Environmental Resource Associates (ERA) (Arvada, Colorado) or Analytical Standards Incorporated (ASI) (Parkersburg, West Virginia), etc. The PE samples contain a preordained number of analytes of interest for each method. Although the samples are shipped to the laboratory by the contractor in containers identical to those used in its field effort, the "picket fence" nature of the chromatograms, and the presence of uncharacteristic analytes immediately alert the laboratory that a PE sample has been submitted.

   This type of PE sample is most useful during the early phases of laboratory selection, immediately after a laboratory audit. Together with the analytical results, a "sample" sample delivery group (SDG) is produced that the contractor reviews for adequacy and completeness of data, and the presence of the Quality Assurance/Quality Control elements that will be required by the QAPP or the CLP SOW.

3. **Customized Commercial PE Samples**

   The PE samples are customized to contain only those analytes that are usually present for the specific project. The concentrations are customized to match the average field concentrations. The samples are prepared in the contractor's containers identical to those used in the field. As was the case with the "off the shelf" PE samples above, the customized PE samples are issued dummy identifications in line with the field sampling numbering system.

An analytical laboratory can detect standard PE samples as soon as the first analysis is run, and that sample will receive special attention. Since the purpose of a PE sample is to measure laboratory

performance under normal conditions, PE samples must be disguised. This can be accomplished in the following manner:

1.0 Ordering and Scheduling

- If the project is ongoing or historical data exists, it is possible to order a customized PE sample to resemble an actual environmental sample. Determine which analytes need to be included in the PE sample, i.e. analytes of concern at the project and/or analytes that have been previously detected. If soil and water samples are to be tested, include both matrices in the PE sample.

- Ensure that all analytes fall at least within five times the laboratory's practical quantitation limit (PQL) or reporting limit. Check the project Quality Assurance Project Plan (QAPP) to find these levels.

- Once the analysis methods, analytes and concentrations have been identified, determine the appropriate type and number of Tetra Tech sample containers needed to submit to the PE sample vendor.

- Contact three PE sample vendors, such as ERA, ASI, etc. and price the sample. Choose the vendor who can offer the PE sample that best fits the requirements for the best price. Instruct the vendor to send a single copy of the certified results marked confidential to one designated Tetra Tech person.

- If the project extends over a period of a month or more, order the PE sample to arrive at the site on a staggered schedule. This will prevent the laboratory from using the wrong sample bottles for the wrong analysis as well as preventing the laboratory from identifying the PE sample as such on the first analysis, and treating the remaining analysis with special attention.

- Analytes with short holding times should not be scheduled for Friday shipment or Monday arrival. The weekend will reduce the holding time remaining for the laboratory. The sampling date entered on the Tetra Tech Chain-of-Custody (COC) must be the PE sample vendors preparation or shipment date. For instance, the PE sample vendor prepares and ships the volatile organic compound (VOC) PE sample Monday. It arrives at Tetra Tech Tuesday where it is recorded, processed shipped to arrive at the laboratory on Wednesday in it's third day of holding time.

  Then schedule the metals PE sample to arrive Tuesday to ship the same day and so forth. Shipping the PE sample in this manner will prevent the laboratory from flagging the PE sample as such.

2.0 PE Sample Receipt

Tetra Tech's receipt of the PE sample cooler from the vendor should be well documented via video recorder or camera. Important things to do and document are as follows:

- The PE sample cooler should be received from the vendor with an unbroken secure seal.

- An intact complete COC from the vendor should accompany the PE sample. Keep the vendor COC in a secure project PE sample file.

- Open the PE sample cooler, verify that the correct type and number of sample containers are present and their labels correspond to the information on the COC.

- Check the PE samples temperature by placing for four minutes a mercury thermometer in the temperature blank that accompanied the PE sample. The temperature should be 4°C ± 2°C. If the temperature exceeds this range contact the project manager before proceeding. Record the temperature of the temperature blank on the Tetra Tech COC.

- Number the PE sample with an ID number similar to a regular sample. Use a site number that does not exist. Exchange the vendor labels on the sample containers for completed Tetra Tech labels. Keep the vendor labels and Tetra Tech PE sample numbers in a secure project PE sample file.

- Record the appropriate PE sample information on a Tetra Tech COC, preferably a COC that already includes environmental samples. The sample date recorded on the COC for the PE sample should be the date prepared by the vendor.

- Ship the PE samples overnight to the laboratory the same day they are received at Tetra Tech if possible.

3.0 PE Sample Result Analysis

The certified results will either accompany the PE sample to Tetra Tech, or arrive within a few weeks of the PE sample. The certified results will give the actual concentration of each analyte in the PE sample and an acceptable range of recovery.

When the PE sample results arrive from the laboratory, compare the results to the vendor's certified results. The easiest way to do this is to comprise a table. The column headings in the table should be:

- Analyte and method.

- Laboratory method detection limit.

- Laboratory practical quantitation or reporting limit.

- Laboratory result (include dilution results and dilution factor).

- Vendor certified value.

- Vendor certified range.

- Good or Fail (good if the laboratory result falls within the vendor certified range, fail if it does not).

The table should include all the analytes included in the vendor's certified results and all the analytes the laboratory reported positive concentrations for. All analytes the laboratory reports within the vendor's acceptable range are good results. If the laboratory reports a positive concentration for an analyte that is not included in the vendors certified results, that is a false positive and a failed analyte. All analytes that fall outside the vendor's acceptable range (including nondetects or false negatives) are failed results.

Compose a letter to the laboratory informing them of the PE sample results. Request that they address any failures by a given date. At this point the laboratory may receive a copy of the vendor's certified values.

Finally, when the laboratory has addressed all their failures satisfactorily, compose a letter to the client informing them of the laboratories performance. Include suggestions, recommendations and conclusions regarding the laboratories future work with Tetra Tech. Also include the vendor's certified values, copies of the original laboratory results and any revised laboratory results.

TETRA TECH, INC. SAN BERNARDINO, CALIFORNIA

STANDARD OPERATING PROCEDURE

RAW DATA AND MAGNETIC TAPE AUDITS

Tt-QA SOP No. QA002-93

APPROVALS		Date
Auditor	Ms. Lisa L. Arrasmith	
Manager, Quality Assurance	Dr. Garabed Kassakhian	
Program Manager, Quality Assurance	Dr. William Brownlie	

Effective Date _____ Revision _____

RAW DATA AND MAGNETIC TAPE AUDITS

1.0 Introduction

The purpose of raw data and magnetic tape audits is to determine the degree to which the raw data matched the reported results sent to Tetra Tech, Inc. and whether the laboratory was using the Quality Control criteria stated in the Quality Assurance Project Plan (QAPP) during data reduction and reporting. The Magnetic Tape Audit consists of the examination of organic Performance Evaluation (PE) sample results.

1.1 Organics Raw Data Audit Methodology

The following is an outline of the procedure followed to audit the organics raw data. All calculations are based on the values from the computer output of the analytical instrument used to generate the raw data. The original raw data sheets must be used and not photocopies of the raw data.

- The tuning standards for GC/MS Methods are checked for ion intensity criteria as listed in each method.
- The initial and/or continuing calibrations are checked by calculating the Calibration Check Compounds (CCC) and the System Performance Check Compounds (SPCC) for each calibration, and comparing these values to the values reported in the SDGs. They should agree within 1%.
- The Laboratory Control Samples (LCS) recoveries are calculated for 10% of the compounds and then compared to SDG percent recoveries.
- The Matrix Spike/Matrix Spike Duplicate (MS/MSD) recoveries were calculated by using values from 10% of the spiked compounds. Calculate the % RSD for the same 10% and compare to the SDG data.
- Calculate the surrogate recovery for the blank, LCS, MS/MSD and the sample the MS/MSD was derived from. Ten percent of the environmental samples should also be calculated. Compare with SDG results.
- Visually inspect the chromatograms for the blank, the low level standard, and 10% of all other runs. Look for peaks unlabeled or crossed out, get an explanation for these peaks. Check to see that the elution order is correct.
- Check that the 12 hour time clock for GC/MS methods was observed for all samples, standards, spikes and blanks.
- When the raw data match the SDG data there is no discrepancy to be reported, and the statement "The raw data support the reported results." will be used.

1.1.1 Calculation Formulas for Organic Raw Data Audit

- Response Factor = $\frac{\text{(Response of Analyte)(Conc. of Internal Standard)}}{}$

(Response of Internal Standard)(Conc. of Analyte)

- % Difference = $\frac{\text{(Response Factor I - Response Factor from Daily Cal.)(100)}}{\text{Response Factor from Initial Cal.}}$

- % Relative Standard Deviation = $\frac{\text{(Std. Deviation of Response Factors)(100)}}{\text{Mean of Response Factors}}$

- % Recovery = $\frac{\text{(Measured Value for Reference Compound)(100)}}{\text{True Value for Reference Compound}}$

1.2 Inorganics Raw Data Audit Methodology

The following is an outline of the procedure followed to audit the inorganics raw data:

- Choose a Sample Delivery Group (SDG) to review. If a performance evaluation (PE) sample was submitted to the lab, include its SDG in the audit.

- Obtain the raw data for the SDG of interest, including instrument printouts, strip charts and copies of analyst's notes.

- Review the SDG's laboratory case narrative. Verify any discrepancies or out of control instrumentation in the SDG and the raw data.

- Find the USEPA Method SW6010 results in the SDG and the raw data package.

- Choose a sample from the SDG to review. Find the corresponding sample results in the raw data package.

- Compare the analytical results and analysis date in the SDG to the results and date from the raw data package.

- For soil samples, confirm calculations accounting for percent solids content. Confirm Matrix Spike percent recoveries and relative percent difference between MS/MSD and duplicate samples.

- Compare and confirm QC results reported in the SDG, the raw data package and the laboratory's QAPP for:

    - Initial and Continuing Calibrations Verifications;
    - Initial and Continuing Calibration Blanks;
    - Matrix Spikes, Matrix Duplicates and/or Matrix Spike Duplicates;
    - Method Blanks and Laboratory Control Samples.

- Document any and all discrepancies found. Immediately contact the department manager, section manager or analyst to discuss and resolve any discrepancies found between the

SDG, the raw data package and the QAPP. Completely document the resolution and/or explanation of any discrepancies.

- When all discrepancies are resolved (or none are found), repeat the review procedure for other samples in the SDG. Then repeat the review procedure for all other methods.

Acronyms used for inorganic review:

CCB: Continuing Calibration Blank
CCV: Continuing Calibration Verification
ICB: Initial Calibration Blank
ICV: Initial Calibration Verification
LCS: Laboratory Control Sample
MBAS: Methylene Blue Activated Substances
MS: Matrix Spike
MSD: Matrix Spike Duplicate
PBW: Preparation Blank, Water
TDS: Total Dissolved Solids

1.2.1 Calculations for Inorganics Raw Data Audit

Calculations for soil samples are confirmed from the raw data and the preparation log to the results reported in the SDG using the following calculation:

SDG result (mg/Kg) = instrument result (mg/L) * prep log conversion (L/g) * (1000 g/Kg)

1.3 Magnetic Tape Audit Methodology

Review all pertinent SDG data concerning the PE sample, the data files, directory files and data output files. Determine the names for the following:

- Initial Calibration with associated BFB Tune;
- Continuing Calibration(s) with associated BFB Tune(s);
- Method Blank(s);
- MS/MSD Samples;
- LCS Sample(s);
- PE Sample and any dilution(s).

For one PE Sample the minimum files needed are twenty-three. After verifying that the correct files were downloaded without corruption, the files are then renamed in order that, during manipulations for audit purposes, no original files are overwritten. Overwritten files may cause re-downloading of the magnetic tape.

At this point the data from the hard copy SDG and the results from the analyst's raw data and the downloaded computer data output files are compared to each other. Any discrepancies are noted. Assuming the Quant ID File has not changed global method parameters significantly, and the distinct and separate Calibration File Program has likewise not changed, the initial calibration data files are

reprocessed and the Calibration File Program then operates on the initial calibration reprocessed data output files. Again, assuming these data output files were correctly integrated by the computer and no significant manual integration was needed, the average response factors generated by the Calibration Program are imported into the Quant ID File. For SW-846 Method 8260, these are the response factors for all applicable quantification, however, this is true only if the continuing calibration that is reprocessed, meets CCC and SPCC criteria. If the CCC or SPCC fail criteria, either the Initial Calibration data files or Continuing Calibration data file are wrong, or a computer/operator integration has occurred incorrectly.

If all criteria are correct, then the remaining data files are reprocessed and the resulting data output files are compared to the reported SDG results. *These are the critical values that the tape audit verifies. Any discrepancies are noted and are identified as issues that need to be resolved.*

APPENDIX L - ANALYTICAL DATA SUMMARY

ANALYTICAL DATA SUMMARY
SITE SS02-WASTE ACCUMULATION
AREA NO. 2/LANDFILL

Base: Kotzebue LRRS						Table 2.1.1								
Site: SS2						Analytical Data Summary								
Extraction Method: EPA Method 3550						Method AK102								
Analytical Method: EPA Method AK102														
Matrix: Soil														
Units: mg/kg														
			Environmental Samples											
		Field ID:		SS02-SS1				SS02-SS2				SS02-SS3		
		Batch ID:		H632				H632				H632		
Parameters	MDL		PQL	Result	Validity	Comments	PQL	Result	Validity	Comments	PQL	Result	Validity	Comments
Diesel Hydrocarbons	0.9		30	2400*		a	3.2	7.0	B	a	3.0	25		a
AK102 Extended	NA		NA	31000**		g								
* Sample diluted at a factor of 10.														
** Sample diluted at a factor of 100.														

Base: Kotzebue LRRS						Table 2.1.1							
Site: SS2						Analytical Data Summary							
Extraction Method: EPA Method 3550						Method AK102							
Analytical Method: EPA Method AK102													
Matrix: Soil													
Units: mg/kg													
			Environmental Samples										
		Field ID:		SS02-SS3 DUP									
		Batch ID:		H632									
Parameters	MDL		PQL	Result	Validity	Comments							
Diesel Hydrocarbons	0.9		3.2	3.7		g							

Base: Kotzebue LRRS				Table 2.1.1											
Site: SS2				Analytical Data Summary											
Extraction Method: EPA Method 3550				Method AK102											
Analytical Method: EPA Method AK102															
Matrix: Soil															
Units: mg/kg															
			Environmental Samples												
		Field ID:	BKGRND SS2-02				BKGRND SS2-02 DUP								
		Batch ID:		H909				H909							
Parameters	MDL		PQL	Result	Validity	Comments	PQL	Result	Validity	Comments					
Diesel Hydrocarbons	0.9		25	2600		g	25	3800		g					

Base: Kotzebue LRRS						Table 2.1.2								
Site: SS2						Analytical Data Summary								
Extraction Method: EPA Method 3050						EPA Method 6010								
Analytical Method: EPA Method 6010														
Matrix: Soil														
Units: mg/kg														
			Environmental Samples											
		Field ID:		SS02-SS1				SS02-SS2				SS02-SS3		
		Batch ID:		H632				H632				H632		
Parameters	MDL		PQL	Result	Validity	Comments	PQL	Result	Validity	Comments	PQL	Result	Validity	Comments
Aluminum	0.96		3	6200	J	c	3	8200	J	c	3	6900	J	c
Antimony	3.2		10	ND	UJ	c	10	ND	UJ	c	10	ND	UJ	c
Arsenic	2.8		10	5	J		10	6	J		10	7	J	
Barium	0.43		1	98		g	1	98		g	1	110		g
Beryllium	0.19		0.1	0.1		g	0.1	0.1		g	0.1	0.1		g
Cadmium	0.56		2	ND	U	g	2	ND	U	g	2	ND	U	g
Calcium	2.1		6	17000	J	a,c	7	29000	J	a,c	7	19000	J	a,c
Chromium, total	0.19		0.6	12	J	a,c	0.6	16	J	a,c	0.6	11	J	a,c
Cobalt	0.28		1	6		g	1	7		g	1	7		g
Copper	0.077		0.2	9.3		a	0.2	11		a	0.3	11		a
Iron	0.58		2	12000	J	c	2	14000	J	c	2	15000	J	c
Magnesium	1.3		4	8200	J	c	4	9800	J	c	4	9500	J	c
Manganese	0.32		1	220	J	c	1	220	J	c	1	300	J	c
Molybdenum	0.21		0.7	0.3	J	k	0.7	ND	U	g	0.7	ND	U	g
Nickel	0.57		2	26		g	2	25		g	2	25		g
Potassium	16		50	410		g	50	260		g	50	320		g
Selenium	3.2		10	4	J		10	6	J		10	6	J	
Silver	0.13		0.4	0.1	J		0.4	ND	U	g	0.4	ND	U	g
Sodium	6.5		20	190		g	20	160		g	20	170		g
Thallium	1.3		4	8		g	4	7		g	4	9		g
Vanadium	0.12		0.4	26	J	c	0.4	30	J	c	0.4	28	J	c
Zinc	0.22		0.7	34		a	0.8	31		a	0.8	65		a
Silica	NR		34	280		g	35	490		g	36	570		g
NR = Not Reported.														

Base: Kotzebue LRRS					Table 2.1.3										
Site: SS2					Analytical Data Summary										
Extraction Method: See below					EPA Method 7000										
Analytical Method: See below															
Matrix: Soil															
Units: mg/kg															
				Environmental Samples											
			Field ID:		SS02-SS1				SS02-SS2				SS02-SS3		
	EPA		Batch ID:		H632				H632				H632		
Parameters	Method	MDL		PQL	Result	Validity	Comments	PQL	Result	Validity	Comments	PQL	Result	Validity	Comments
Lead	3050/7421	0.12		0.4	6.6*		g	0.4	3.6*		g	0.4	31**		g
Mercury	7471	0.0020		0.03	0.05	B	a	0.03	0.04	B	a	0.03	0.04	B	a
* Sample diluted at a factor of 5.00															
** Sample diluted at a factor of 20.00															

Base: Kotzebue LRRS
Site: SS2
Extraction Method: EPA Method 3550
Analytical Method: EPA Method 8081
Matrix: Soil
Units: mg/kg

Table 2.1.4
Analytical Data Summary
EPA Method 8081

				Environmental Samples												
			Field ID:		SS02-SS1		SS02-SS1					SS02-SS2		SS02-SS2		
			Batch ID:		H632		H632					H632		H632		
	DB-5	DB-608		DB-5	DB-5	DB-608	DB-608			DB-5	DB-5	DB-608	DB-608			
Parameters	MDL	MDL		PQL	Result	PQL	Result	Validity	Comments	PQL	Result	PQL	Result	Validity	Comments	
					Dilution 10		Dilution 10									
alpha BHC	0.0001	0.0001		0.0022	0.019	0.0019	ND	U	a,h	0.00023	0.0055	0.00020	0.0028	B	a	
beta BHC	0.0001	0.0001		0.0032	ND	0.0030	ND	U	g	0.00034	0.0044	0.00032	ND	U	h	
delta BHC	0.0001	0.0001		0.0033	0.021	0.0025	0.016	J	n	0.00035	0.11	0.00026	0.0031		n	
gamma BHC (Lindane)	0.0001	0.0001		0.0026	ND	0.0022	ND	U	g	0.00028	0.0014	0.00023	ND	U	h	
Heptachlor	0.0001	0.0001		0.0030	ND	0.0030	ND	U	g	0.0003	0.0003	0.0003	ND	U	h	
Aldrin	0.0001	0.0001		0.0021	ND	0.0027	ND	U	g	0.00022	ND	0.00028	ND	U	g	
Heptachlor Epoxide	0.0001	0.0001		0.0026	0.052	0.0033	ND	U	a,h	0.00028	0.46	0.00035	ND	U	a,h	
Endosulfan I	0.0001	0.0001		0.0038	ND	0.0038	ND	U	g	0.00040	0.0010	0.00040	ND	U	h	
Dieldrin	0.0001	0.0002		0.0041	ND	0.0051	ND	U	g	0.0004	ND	0.0005	ND	U	g	
4,4'-DDE	0.0001	0.0002		0.0034	0.036	0.0051	0.038		g	0.0004	0.070 E*	0.0005	0.074 E*	J	n	
Endrin	0.0001	0.0001		0.0034	ND	0.0035	ND	U	g	0.0004	0.0028	0.0004	0.0059	J	n	
Endosulfan II	0.0002	0.0002		0.0055	0.011	0.0053	ND	R	a	0.0006	0.0063	0.0006	ND	U	a,h	
4,4'-DDD	0.0001	0.0001		0.0041	0.028	0.0049	0.069		a	0.0004	0.056	0.0005	0.12		a	
Endosulfan Sulfate	0.0002	0.0002		0.0084	ND	0.0084	ND	U	g	0.0009	ND	0.0009	ND	U	g	
4,4'-DDT	0.0002	0.0001		0.0078	0.26	0.0045	0.24		a	0.0008	0.45 E*	0.0005	0.45 E*	J	n	
Methoxychlor	0.0006	0.0011		0.029	ND	0.037	ND	U	g	0.0031	ND	0.0039	ND	U	g	
Endrin Aldehyde	0.0002	0.0003		0.0076	0.0042	0.0089	ND	U	a,h	0.0008	0.0053	0.0009	ND	U	a,h	
gamma-Chlordane	0.0001	0.0001		0.0018	ND	0.0027	ND	U	g	0.00019	0.0034	0.00028	ND	U	h	
alpha-Chlordane	0.0001	0.0001		0.0022	0.0092	0.0039	ND	U	h	0.00023	ND	0.00040	ND	U	g	
Toxaphene	0.007	0.009		0.25	ND	0.31	ND	U	g	0.03	ND	0.03	ND	U	g	
Arochlor 1016	0.009	0.009		0.30	ND	0.29	ND	U	g	0.03	ND	0.03	ND	U	g	
Arochlor 1242	0.005	0.008		0.18	ND	0.26	ND	U	g	0.02	ND	0.03	ND	U	g	
Arochlor 1248	0.004	0.005		0.12	ND	0.16	ND	U	g	0.01	ND	0.02	ND	U	g	
Arochlor 1254	0.011	0.009		0.36	ND	0.31	ND	U	g	0.04	ND	0.03	ND	U	g	
Arochlor 1260	0.009	0.010		0.29	ND	0.15	ND	U	g	0.03	ND	0.02	ND	U	g	
Arochlor 1221	0.011	0.010		0.36	ND	0.32	ND	U	g	0.04	ND	0.03	ND	U	g	
Arochlor 1232	0.005	0.005		0.15	ND	0.02	ND	U	g	0.02	ND	0.00	ND	U	g	

* Analyte detected above linear calibration range.

Base: Kotzebue LRRS						Table 2.1.4									
Site: SS2						Analytical Data Summary									
Extraction Method: EPA Method 3550						EPA Method 8081									
Analytical Method: EPA Method 8081															
Matrix: Soil															
Units: mg/kg															
			Environmental Samples												
			Field ID:		SS02-SS2DL		SS02-SS2DL				SS02-SS3		SS02-SS3		
			Batch ID:		H632		H632				H632		H632		
	DB-5	DB-608		DB-5	DB-5	DB-608	DB-608			DB-5	DB-5	DB-608	DB-608		
Parameters	MDL	MDL		PQL	Result	PQL	Result	Validity	Comments	PQL	Result	PQL	Result	Validity	Comments
					Dilution 20		Dilution 20				Dilution 10		Dilution 10		
alpha BHC	0.0001	0.0001		0.0045	ND	0.0040	ND	U	a	0.0021	ND	0.0019	ND	U	a
beta BHC	0.0001	0.0001		0.0068	ND	0.0064	ND	U	g	0.0032	0.026	0.0030	ND	U	b,h
delta BHC	0.0001	0.0001		0.0070	0.14	0.0052	ND	U	h	0.0033	ND	0.0025	ND	U	g
gamma BHC (Lindane)	0.0001	0.0001		0.0056	ND	0.0046	ND	U	g	0.0026	ND	0.0022	ND	U	g
Heptachlor	0.0001	0.0001		0.0063	ND	0.0063	ND	U	g	0.0030	ND	0.0029	ND	U	g
Aldrin	0.0001	0.0001		0.0044	ND	0.0057	ND	U	g	0.0021	ND	0.0027	ND	U	g
Heptachlor Epoxide	0.0001	0.0001		0.0056	0.62	0.0070	ND	U	a,h	0.0026	ND	0.0033	ND	U	a
Endosulfan I	0.0001	0.0001		0.0081	ND	0.0081	ND	U	g	0.0038	ND	0.0038	ND	U	g
Dieldrin	0.0001	0.0002		0.0086	ND	0.011	ND	U	g	0.0041	ND	0.0050	ND	U	g
4,4'-DDE	0.0001	0.0002		0.0071	0.099	0.011	0.097		g	0.0034	0.029	0.0050	0.025	J	b
Endrin	0.0001	0.0001		0.0071	0.013	0.0074	0.010	J	n	0.0033	0.0070	0.0035	ND	U	b,h
Endosulfan II	0.0002	0.0002		0.012	0.036	0.01	ND	U	a,h	0.0054	ND	0.0053	ND	U	a
4,4'-DDD	0.0001	0.0001		0.0086	0.077	0.010	0.11		a	0.0041	0.032	0.0048	0.049	J	a,b
Endosulfan Sulfate	0.0002	0.0002		0.018	ND	0.018	ND	U	g	0.0083	ND	0.0083	ND	U	g
4,4'-DDT	0.0002	0.0001		0.016	0.30	0.0094	0.30		a	0.0077	0.11	0.0044	0.11	J	a,b
Methoxychlor	0.0008	0.0011		0.061	ND	0.077	ND	U	g	0.029	ND	0.036	ND	U	g
Endrin Aldehyde	0.0002	0.0003		0.016	0.0060	0.019	ND	U	a,h	0.0075	ND	0.0088	ND	U	a
gamma-Chlordane	0.0001	0.0001		0.0038	ND	0.0057	ND	U	g	0.0018	ND	0.0027	ND	U	g
alpha-Chlordane	0.0001	0.0001		0.0045	ND	0.0081	ND	U	g	0.0021	ND	0.0038	ND	U	g
Toxaphene	0.007	0.009		0.53	ND	0.65	ND	U	g	0.25	ND	0.30	ND	U	g
Arochlor 1016	0.009	0.009		0.63	ND	0.61	ND	U	g	0.30	ND	0.29	ND	U	g
Arochlor 1242	0.005	0.008		0.38	ND	0.54	ND	U	g	0.18	ND	0.26	ND	U	g
Arochlor 1248	0.004	0.005		0.25	ND	0.34	ND	U	g	0.12	ND	0.16	ND	U	g
Arochlor 1254	0.011	0.009		0.76	ND	0.65	ND	U	g	0.36	ND	0.31	ND	U	g
Arochlor 1260	0.009	0.010		0.62	ND	0.33	ND	U	g	0.29	ND	0.15	ND	U	g
Arochlor 1221	0.011	0.010		0.75	ND	0.68	ND	U	g	0.35	ND	0.32	ND	U	g
Arochlor 1232	0.005	0.005		0.33	ND	0.03	ND	U	g	0.15	ND	0.02	ND	U	g

Base: Kotzebue LRRS						Table 2.1.5								
Site: SS2						Analytical Data Summary								
Extraction Method: EPA Method 8260						EPA Method 8260								
Analytical Method: EPA Method 8260														
Matrix: Soil														
Units: mg/kg														
			Environmental Samples											
		Field ID:		SS02-SS1				SS02-SS2				SS02-SS3		
		Batch ID:		H632				H632				H632		
Parameters	MDL		PQL	Result	Validity	Comments	PQL	Result	Validity	Comments	PQL	Result	Validity	Comments
Chloromethane	0.0009		0.003	ND	U	g	0.003	ND	U	g	0.003	ND	U	g
Bromomethane	0.0008		0.003	ND	U	g	0.003	ND	U	g	0.003	ND	U	g
Vinyl Chloride	0.0010		0.003	ND	U	g	0.003	ND	U	g	0.003	ND	U	g
Chloroethane	0.0010		0.003	ND	U	g	0.003	ND	U	g	0.003	ND	U	g
Methylene Chloride	0.0009		0.003	0.001	B J	a	0.003	0.002	B J	a	0.003	0.001	B J	a
Acetone	0.0039		0.01	ND	U	g	0.01	ND	U	g	0.01	ND	U	g
Carbon Disulfide	0.0005		0.002	ND	U	g	0.002	ND	U	g	0.002	ND	U	g
1,1-Dichloroethene	0.0012		0.004	ND	U	g	0.004	ND	U	g	0.004	ND	U	g
1,1-Dichloroethane	0.0004		0.001	ND	U	g	0.001	ND	U	g	0.001	ND	U	g
trans-1,2-Dichloroethene	0.0009		0.003	ND	U	g	0.003	ND	U	g	0.003	ND	U	g
cis-1,2-Dichloroethylene	0.0011		0.004	ND	U	g	0.004	ND	U	g	0.004	ND	U	g
Chloroform	0.0005		0.001	ND	U	g	0.002	ND	U	g	0.001	ND	U	g
1,2-Dichloroethane	0.0005		0.002	ND	U	g	0.002	ND	U	g	0.002	ND	U	g
Methyl Ethyl Ketone (2-butanone)	0.0025		0.008	ND	U	g	0.008	ND	U	g	0.008	ND	U	g
1,1,1-Trichloroethane	0.0004		0.001	ND	U	g	0.001	ND	U	g	0.001	ND	U	g
Carbon Tetrachloride	0.0010		0.003	ND	U	g	0.003	ND	U	g	0.003	ND	U	g
Vinyl Acetate	0.0016		0.005	ND	U	g	0.005	ND	U	g	0.005	ND	U	g
Bromodichloromethane	0.0006		0.002	ND	U	g	0.002	ND	U	g	0.002	ND	U	g
1,2-Dichloropropane	0.0008		0.003	ND	U	g	0.003	ND	U	g	0.003	ND	U	g
cis-1,3-Dichloropropene	0.0007		0.002	ND	U	g	0.002	ND	U	g	0.002	ND	U	g
Trichloroethylene (tce)	0.0005		0.002	ND	U	g	0.002	ND	U	g	0.002	ND	U	g
Dibromochloromethane	0.0003		0.001	ND	U	g	0.001	ND	U	g	0.001	ND	U	g
1,1,2-Trichloroethane	0.0007		0.002	ND	U	g	0.002	ND	U	g	0.002	ND	U	g
Benzene	0.0005		0.0015	ND	U	g	0.0016	ND	U	g	0.0015	ND	U	g

Base: Kotzebue LRRS						Table 2.1.6								
Site: SS2						Analytical Data Summary								
Extraction Method: EPA Method 8260						EPA Method 8260								
Analytical Method: EPA Method 8260														
Matrix: Soil														
Units: mg/kg														
			Environmental Samples											
		Field ID:		SS02-SS1				SS02-SS2				SS02-SS3		
		Batch ID:		H632				H632				H632		
Parameters	MDL		PQL	Result	Validity	Comments	PQL	Result	Validity	Comments	PQL	Result	Validity	Comments
trans-1,3-Dichloropropene	0.0005		0.002	ND	U	g	0.002	ND	U	g	0.002	ND	U	g
2-Chloroethyl Vinyl Ether	0.0007		0.002	ND	U	g	0.002	ND	U	g	0.002	ND	U	g
Bromoform	0.0013		0.004	ND	U	g	0.004	ND	U	g	0.004	ND	U	g
Methyl Isobutyl Ketone	0.0016		0.005	ND	U	g	0.005	ND	U	g	0.005	ND	U	g
2-Hexanone	0.0028		0.009	ND	U	g	0.009	ND	U	g	0.009	ND	U	g
Tetrachloroethylene (pce)	0.0009		0.003	ND	U	g	0.003	ND	U	g	0.003	ND	U	g
1,1,2,2-Tetrachloroethane	0.0009		0.0029	ND	U	g	0.0030	ND	U	g	0.0030	ND	U	g
Toluene	0.0009		0.0029	ND	U	g	0.0030	ND	U	g	0.0030	ND	U	g
Chlorobenzene	0.0007		0.002	ND	U	g	0.002	ND	U	g	0.002	ND	U	g
Ethylbenzene	0.0004		0.0014	ND	U	g	0.0014	ND	U	g	0.0014	0.0008	J	
Styrene	0.0007		0.002	ND	U	g	0.002	ND	U	g	0.002	ND	U	g
1,1,2-Trichloro-1,2,2-trifluoroethane	0.0008		0.002	ND	U	g	0.002	ND	U	g	0.002	ND	U	g
Xylenes, total	0.0020		0.006	ND	U	g	0.007	0.002	J		0.007	0.007		g
1,1,1,2-Tetrachloroethane	0.0010		0.003	ND	U	g	0.003	ND	U	g	0.003	ND	U	g
1,2,3-Trichloropropane	0.0023		0.007	ND	U	g	0.007	ND	U	g	0.007	ND	U	g
Bromochloromethane	0.0007		0.002	ND	U	g	0.002	ND	U	g	0.002	ND	U	g
1-Chlorohexane	0.0007		0.002	ND	U	g	0.002	ND	U	g	0.002	ND	U	g
Bromobenzene	0.0007		0.0023	ND	U	g	0.0024	ND	U	g	0.0024	ND	U	g

Base: Kotzebue LRRS						Table 2.1.6								
Site: SS2						Analytical Data Summary								
Extraction Method: Not Applicable						EPA Method 9060								
Analytical Method: EPA Method 9060														
Matrix: Soil														
Units: mg/kg														
			Environmental Samples											
		Field ID:		SS0[illegible]8-B-1.0				SS02-GT9-B-1.0				SS02-GT10-B-1.0		
		Batch ID:		H671				H671				H671		
Parameters	MDL		PQL	Result	Validity	Comments	PQL	Result	Validity	Comments	PQL	Result	Validity	Comments
Total Organic Carbon	158		560	14200		g	560	5460		g	560	19200		g

Base: Kotzebue LRRS						Table 2.2.1							
Site: SS2						Analytical Data Summary							
Extraction Method: EPA Method 3510						Method AK102							
Analytical Method: EPA Method AK102													
Matrix: Water													
Units: mg/L													
			Environmental Samples										
		Field ID:		SS02-SW1-01									
		Batch ID:		H718									
Parameters	MDL		PQL	Result	Validity	Comments							
Diesel Hydrocarbons	0.06		0.11	ND	U	g							

Base: Kotzebue LRRS						Table 2.2.1							
Site: SS2						Analytical Data Summary							
Extraction Method: EPA Method 3510						Method AK102							
Analytical Method: EPA Method AK102													
Matrix: Water													
Units: mg/L													
			Environmental Samples										
		Field ID:		SS02-MW1-01									
		Batch ID:		H772									
Parameters	MDL		PQL	Result	Validity	Comments							
Diesel Hydrocarbons	0.06		0.11	ND	U	g							

Base: Kotzebue LRRS						Table 2.2.1								
Site: SS2						Analytical Data Summary								
Extraction Method: EPA Method 3510						Method AK102								
Analytical Method: EPA Method AK102														
Matrix: Water														
Units: mg/L														
			Environmental Samples											
		Field ID:		SS02-MW2-01				SS02-MW3-01				SS02-MW4-01		
		Batch ID:		H792				H792				H792		
Parameters	MDL		PQL	Result	Validity	Comments	PQL	Result	Validity	Comments	PQL	Result	Validity	Comments
Diesel Hydrocarbons	0.06		0.11	0.13	J	c	0.11	5.5	J	c	0.11	0.10	J	c

Base: Kotzebue LRRS						Table 2.2.2					
Site: SS2						Analytical Data Summary					
Extraction Method: EPA Method 3010 (unfiltered)/3005 (filtered)						EPA Method 6010					
Analytical Method: EPA Method 6010											
Matrix: Water											
Units: mg/L											
			Environmental Samples								
		Field ID:		SS02-SW1-01				SS02-SW1-01			
		Batch ID:		H718				H718			
Parameters	MDL		PQL	Result (Unfiltered)	Validity	Comments	PQL	Result (Filtered)	Validity	Comments	
Aluminum	0.01		0.03	ND	U	g	0.03	ND	U	g	
Antimony	0.03		0.1	ND	U	g	0.1	ND	U	g	
Arsenic	0.03		0.1	ND	U	g	0.1	ND	U	g	
Barium	0.004		0.01	0.11		g	0.01	0.11		g	
Beryllium	0.0002		0.001	ND	U	g	0.001	ND	U	g	
Cadmium	0.006		0.02	ND	U	g	0.03	ND	U	g	
Calcium	0.02		0.07	66		g	0.06	67		g	
Chromium, total	0.002		0.006	ND	U	g	0.006	ND	U	g	
Cobalt	0.003		0.01	ND	U	g	0.01	ND	U	g	
Copper	0.001		0.002	0.004	B	a,k	0.003	0.002	J		
Iron	0.006		0.02	0.10		g	0.03	ND	U	g	
Magnesium	0.01		0.04	21		g	0.03	22		g	
Manganese	0.003		0.01	0.02		g	0.01	0.02		g	
Molybdenum	0.002		0.007	ND	U	g	0.006	ND	U	g	
Nickel	0.006		0.02	ND	U	g	0.03	ND	U	g	
Potassium	0.2		0.5	4.6		g	0.6	4.8		g	
Selenium	0.03		0.1	ND	U	g	0.1	ND	U	g	
Silver	0.001		0.004	ND	U	g	0.003	ND	U	g	
Sodium	0.07		0.2	9.2		k	0.2	9.1		g	
Thallium	0.01		0.04	ND	U	g	0.03	ND	U	g	
Vanadium	0.001		0.004	ND	U	g	0.003	ND	U	g	
Zinc	0.002		0.008	0.006	B J	k	0.011	0.005	J		

Base: Kotzebue LRRS
Site: SS2
Extraction Method: EPA Method 3010 (unfiltered)/3005 (filtered)
Analytical Method: EPA Method 6010
Matrix: Water
Units: mg/L

Table 2.2.2
Analytical Data Summary
EPA Method 6010

			Environmental Samples							
		Field ID:		SS02-MW1-01				SS02-MW1-01		
		Batch ID:		H772				H772		
Parameters	MDL		PQL	Result (Unfiltered)	Validity	Comments	PQL	Result (Filtered)	Validity	Comments
Aluminum	0.01		0.03	1.8		k	0.03	0.02	B J	a,k
Antimony	0.03		0.1	ND	U	g	0.1	ND	U	g
Arsenic	0.03		0.1	ND	U	g	0.1	ND	U	g
Barium	0.004		0.01	0.22		g	0.01	0.14		g
Beryllium	0.0002		0.001	ND	U	g	0.001	ND	U	g
Cadmium	0.006		0.02	ND	U	g	0.02	ND	U	g
Calcium	0.02		0.07	65	J	c	0.07	59	J	c,k
Chromium, total	0.002		0.006	0.010		g	0.006	ND	U	g
Cobalt	0.003		0.01	0.005	J		0.01	ND	U	g
Copper	0.001		0.002	0.015		g	0.002	0.003		g
Iron	0.006		0.02	8.1		g	0.02	1.1		g
Magnesium	0.01		0.04	15		g	0.04	14		g
Manganese	0.003		0.01	0.36		g	0.01	0.27		g
Molybdenum	0.002		0.007	ND	U	g	0.007	ND	U	g
Nickel	0.006		0.02	0.01	J		0.02	ND	U	g
Potassium	0.2		0.5	4.3		g	0.5	4.0		g
Selenium	0.03		0.1	ND	U	g	0.1	ND	U	g
Silver	0.001		0.004	ND	U	g	0.004	ND	U	g
Sodium	0.07		0.2	46		g	0.2	58		k
Thallium	0.01		0.04	0.03	J		0.04	0.02	J	
Vanadium	0.001		0.004	0.011		g	0.004	ND	U	g
Zinc	0.002		0.008	0.018		a	0.008	ND	U	g

Base: Kotzebue LRRS						Table 2.2.2								
Site: SS2						Analytical Data Summary								
Extraction Method: EPA Method 3010 (unfiltered)/3005 (filtered)						EPA Method 6010								
Analytical Method: EPA Method 6010														
Matrix: Water														
Units: mg/L														
			Environmental Samples											
		Field ID:		SS02-MW2-01				SS02-MW2-01				SS02-MW3-01		
		Batch ID:		H792				H792				H792		
Parameters	MDL		PQL	Result (Unfiltered)	Validity	Comments	PQL	Result (Filtered)	Validity	Comments	PQL	Result (Unfiltered)	Validity	Comments
Aluminum	0.01		0.03	2.0		g	0.03	0.04		g	0.03	2.2		g
Antimony	0.03		0.1	ND	U	g	0.1	ND	U	g	0.1	ND	U	g
Arsenic	0.03		0.1	ND	U	g	0.1	ND	U	g	0.1	ND	U	g
Barium	0.004		0.01	0.10		g	0.01	0.04		g	0.01	0.08		g
Beryllium	0.0002		0.001	ND	U	g	0.001	ND	U	g	0.001	ND	U	g
Cadmium	0.006		0.02	ND	U	g	0.02	ND	U	g	0.02	ND	U	g
Calcium	0.02		0.07	25		k	0.07	21		g	0.07	26		k
Chromium, total	0.002		0.006	0.008		g	0.006	ND	U	g	0.006	0.008		g
Cobalt	0.003		0.01	0.003	J	c	0.01	ND	U	g	0.01	0.005	J	
Copper	0.001		0.002	0.011		a	0.002	0.003		g	0.002	0.012		a
Iron	0.006		0.02	4.1		g	0.02	0.07		g	0.02	5.2		g
Magnesium	0.01		0.04	18		g	0.04	16		g	0.04	17		g
Manganese	0.003		0.01	0.10		g	0.01	0.02		g	0.01	0.31		g
Molybdenum	0.002		0.007	0.003	J		0.007	ND	U	g	0.007	0.003	J	
Nickel	0.006		0.02	ND	U	g	0.02	ND	U	g	0.02	0.01	J	
Potassium	0.2		0.5	9.1		k	0.5	8.9		g	0.5	9.8		k
Selenium	0.03		0.1	ND	U	g	0.1	ND	U	g	0.1	ND	U	g
Silver	0.001		0.004	ND	U	g	0.004	ND	U	g	0.004	ND	U	g
Sodium	0.07		0.2	92		k	0.2	89		g	0.2	120		k
Thallium	0.01		0.04	0.02	J		0.04	ND	U	g	0.04	ND	U	g
Vanadium	0.001		0.004	0.007		g	0.004	ND	U	g	0.004	0.008		g
Zinc	0.002		0.008	0.018	B	a	0.008	0.003	B J	a	0.008	0.020		a

Base: Kotzebue LRRS						Table 2.2.2								
Site: SS2						Analytical Data Summary								
Extraction Method: EPA Method 3010 (unfiltered)/3005 (filtered)						EPA Method 6010								
Analytical Method: EPA Method 6010														
Matrix: Water														
Units: mg/L														
			Environmental Samples											
		Field ID:		SS02-MW3-01				SS02-MW4-01				SS02-MW4-01		
		Batch ID:		H792				H792				H792		
Parameters	MDL		PQL	Result (Filtered)	Validity	Comments	PQL	Result (Unfiltered)	Validity	Comments	PQL	Result (Filtered)	Validity	Comments
Aluminum	0.01		0.03	0.01	J		0.03	1.3		g	0.03	0.03	J	
Antimony	0.03		0.1	ND	U	g	0.1	ND	U	g	0.1	ND	U	g
Arsenic	0.03		0.1	ND	U	g	0.1	ND	U	g	0.1	ND	U	g
Barium	0.004		0.01	0.03		g	0.01	0.08		g	0.01	0.04		g
Beryllium	0.0002		0.001	ND	U	g	0.001	ND	U	g	0.001	ND	U	g
Cadmium	0.006		0.02	ND	U	g	0.02	ND	U	g	0.02	ND	U	g
Calcium	0.02		0.07	23		g	0.07	24		k	0.07	21		g
Chromium, total	0.002		0.006	ND	U	g	0.006	0.005	J		0.006	ND	U	g
Cobalt	0.003		0.01	ND	U	g	0.01	ND	U	g	0.01	ND	U	g
Copper	0.001		0.002	0.004		g	0.002	0.014		a	0.002	0.004		g
Iron	0.006		0.02	0.03		g	0.02	3.4		g	0.02	0.06		g
Magnesium	0.01		0.04	17		g	0.04	18		g	0.04	16		g
Manganese	0.003		0.01	0.29		g	0.01	0.09		g	0.01	0.02		g
Molybdenum	0.002		0.007	0.003	J		0.007	0.003	J		0.007	ND	U	g
Nickel	0.006		0.02	ND	U	g	0.02	0.01	J		0.02	ND	U	g
Potassium	0.2		0.5	10		g	0.5	8.8		k	0.5	8.8		g
Selenium	0.03		0.1	ND	U	g	0.1	ND	U	g	0.1	ND	U	g
Silver	0.001		0.004	ND	U	g	0.004	ND	U	g	0.004	ND	U	g
Sodium	0.07		0.2	130		g	0.2	91		k	0.2	89		g
Thallium	0.01		0.04	ND	U	g	0.04	ND	U	g	0.04	ND	U	g
Vanadium	0.001		0.004	ND	U	g	0.004	0.003	J		0.004	ND	U	g
Zinc	0.002		0.008	ND	U	a	0.008	0.021		a	0.008	ND	U	a

Base: Kotzebue LRRS					Table 2.2.3										
Site: SS2					Analytical Data Summary										
Extraction Method: See below					EPA Method 7000										
Analytical Method: See below															
Matrix: Water															
Units: mg/L															
				Environmental Samples											
			Field ID:		SS02-SW1-01				SS02-SW1-01						
	EPA		Batch ID:		H718				H718						
Parameters	Method	MDL		PQL	Result	Validity	Comments	PQL	Result	Validity	Comments				
					(Unfiltered)				(Filtered)						
Lead	3020/7421	0.001		0.004	0.002	B J	a	0.006	0.003	B J	a				
Mercury	7470	0.00002		0.00006	0.00002	B J	a,k	0.00006	ND	U	g				

Base: Kotzebue LRRS					Table 2.2.3										
Site: SS2					Analytical Data Summary										
Extraction Method: See below					EPA Method 7000										
Analytical Method: See below															
Matrix: Water															
Units: mg/L															
				Environmental Samples											
			Field ID:		SS02-MW1-01				SS02-MW1-01						
	EPA		Batch ID:		H772				H772						
Parameters	Method	MDL		PQL	Result (Unfiltered)	Validity	Comments	PQL	Result (Filtered)	Validity	Comments				
Lead	3020/7421	0.001		0.004	0.008		g	0.004	ND	U	k				
Mercury	7470	0.00002		0.00006	0.00007		g	0.00006	ND	UJ	t				

Base: Kotzebue LRRS						Table 2.2.3									
Site: SS2						Analytical Data Summary									
Extraction Method: See below						EPA Method 7000									
Analytical Method: See below															
Matrix: Water															
Units: mg/L															
				Environmental Samples											
			Field ID:		SS02-MW2-01				SS02-MW2-01				SS02-MW3-01		
	EPA		Batch ID:		H792				H792				H792		
Parameters	Method	MDL		PQL	Result (Unfiltered)	Validity	Comments	PQL	Result (Filtered)	Validity	Comments	PQL	Result (Unfiltered)	Validity	Comments
Lead	3020/7421	0.001		0.004	0.006		g	0.004	ND	U	g	0.004	0.007		g
Mercury	7470	0.00002		0.00006	ND	U	g	0.00006	ND	U	g	0.00006	ND	U	g

Base: Kotzebue LRRS						Table 2.2.3									
Site: SS2						Analytical Data Summary									
Extraction Method: See below						EPA Method 7000									
Analytical Method: See below															
Matrix: Water															
Units: mg/L															
				Environmental Samples											
			Field ID:		SS02-MW3-01				SS02-MW4-01				SS02-MW4-01		
	EPA		Batch ID:		H792				H792				H792		
Parameters	Method	MDL		PQL	Result (Filtered)	Validity	Comments	PQL	Result (Unfiltered)	Validity	Comments	PQL	Result (Filtered)	Validity	Comments
Lead	3020/7421	0.001		0.004	0.002	J		0.004	0.004		g	0.004	0.004		g
Mercury	7470	0.00002		0.00006	ND	U	g	0.00006	ND	U	g	0.00006	ND	U	g

Base: Kotzebue LRRS						Table 2.2.4								
Site: SS2						Analytical Data Summary								
Extraction Method: EPA Method 3510						EPA Method 8081								
Analytical Method: EPA Method 8081														
Matrix: Water														
Units: ug/L														
				Environmental Samples										
			Field ID:		SS02-SW1-01		SS02-SW1-01							
			Batch ID:		H718		H718							
	DB-5	DB-608		DB-5	DB-5	DB-608	DB-608							
Parameters	MDL	MDL		PQL	Result	PQL	Result	Validity	Comments					
alpha BHC	0.002	0.001		0.01	ND	0.01	ND	U	g					
beta BHC	0.002	0.003		0.01	ND	0.01	ND	U	g					
delta BHC	0.002	0.002		0.01	ND	0.01	ND	U	g					
gamma BHC (Lindane)	0.002	0.002		0.01	ND	0.01	ND	U	g					
Heptachlor	0.004	0.004		0.01	ND	0.01	ND	U	g					
Aldrin	0.005	0.010		0.02	ND	0.03	ND	U	g					
Heptachlor Epoxide	0.003	0.002		0.01	0.00	0.01	ND	U	h					
Endosulfan I	0.004	0.004		0.01	ND	0.01	ND	U	g					
Dieldrin	0.004	0.005		0.02	ND	0.01	ND	U	g					
4,4'-DDE	0.009	0.010		0.029	0.065	0.032	0.054		g					
Endrin	0.004	0.004		0.014	0.014	0.012	ND	U	h,k					
Endosulfan II	0.007	0.005		0.021	ND	0.015	ND	U	g					
4,4'-DDD	0.005	0.004		0.017	0.045	0.014	0.039		g					
Endosulfan Sulfate	0.003	0.003		0.01	ND	0.01	ND	U	g					
4,4'-DDT	0.010	0.008		0.031	0.039	0.026	0.030		g					
Methoxychlor	0.038	0.035		0.12	ND	0.11	ND	U	g					
Endrin Aldehyde	0.010	0.010		0.031	ND	0.031	ND	U	g					
gamma-Chlordane	0.003	0.003		0.01	ND	0.01	ND	U	g					
alpha-Chlordane	0.003	0.004		0.01	ND	0.01	ND	U	g					
Toxaphene	0.25	0.15		0.79	ND	0.46	ND	U	g					
Arochlor 1016	0.3	0.3		0.9	ND	0.9	ND	U	g					
Arochlor 1242	0.2	0.3		0.7	ND	1.0	ND	U	g					
Arochlor 1248	0.2	0.2		0.8	ND	0.7	ND	U	g					
Arochlor 1254	0.2	0.3		1.0	ND	1.0	ND	U	g					
Arochlor 1260	0.3	0.3		1.0	ND	0.9	ND	U	g					
Arochlor 1221	0.2	0.2		0.8	ND	0.8	ND	U	g					
Arochlor 1232	0.3	0.3		0.8	ND	1.1	ND	U	g					

Base: Kotzebue LRRS							Table 2.2.4								
Site: SS2							Analytical Data Summary								
Extraction Method: EPA Method 3510							EPA Method 8081								
Analytical Method: EPA Method 8081															
Matrix: Water															
Units: ug/L															
				Environmental Samples											
			Field ID:		SS02-MW1-01		SS02-MW1-01								
			Batch ID:		H772		H772								
	DB-5	DB-608		DB-5	DB-5	DB-608	DB-608								
Parameters	MDL	MDL		PQL	Result	PQL	Result	Validity	Comments						
alpha BHC	0.002	0.001		0.01	ND	0.01	ND	U	g						
beta BHC	0.002	0.003		0.01	ND	0.01	ND	U	g						
delta BHC	0.002	0.002		0.01	0.10	0.01	ND	U	h						
gamma BHC (Lindane)	0.002	0.002		0.01	ND	0.01	ND	U	g						
Heptachlor	0.004	0.004		0.01	ND	0.01	ND	U	g						
Aldrin	0.005	0.010		0.02	ND	0.03	ND	U	g						
Heptachlor Epoxide	0.003	0.002		0.01	0.36	0.01	ND	U	h						
Endosulfan I	0.004	0.004		0.01	ND	0.01	ND	U	g						
Dieldrin	0.004	0.005		0.02	ND	0.01	ND	U	g						
4,4'-DDE	0.009	0.010		0.029	ND	0.032	ND	U	g						
Endrin	0.004	0.004		0.014	ND	0.012	ND	U	a						
Endosulfan II	0.007	0.005		0.021	ND	0.015	ND	U	g						
4,4'-DDD	0.005	0.004		0.017	ND	0.014	ND	U	g						
Endosulfan Sulfate	0.003	0.003		0.01	ND	0.01	ND	U	g						
4,4'-DDT	0.010	0.008		0.031	ND	0.026	ND	U	g						
Methoxychlor	0.038	0.035		0.12	ND	0.11	ND	U	g						
Endrin Aldehyde	0.010	0.010		0.031	ND	0.031	ND	U	g						
gamma-Chlordane	0.003	0.003		0.01	ND	0.01	ND	U	g						
alpha-Chlordane	0.003	0.004		0.01	ND	0.01	ND	U	g						
Toxaphene	0.25	0.15		0.79	ND	0.46	ND	U	g						
Arochlor 1016	0.3	0.3		0.9	ND	0.9	ND	U	g						
Arochlor 1242	0.2	0.3		0.7	ND	1.0	ND	U	g						
Arochlor 1248	0.2	0.2		0.8	ND	0.7	ND	U	g						
Arochlor 1254	0.2	0.3		1.0	ND	1.0	ND	U	g						
Arochlor 1260	0.3	0.3		1.0	ND	0.9	ND	U	g						
Arochlor 1221	0.2	0.2		0.8	ND	0.8	ND	U	g						
Arochlor 1232	0.3	0.3		0.8	ND	1.1	ND	U	g						

Base: Kotzebue LRRS						Table 2.2.4									
Site: SS2						Analytical Data Summary									
Extraction Method: EPA Method 3510						EPA Method 8081									
Analytical Method: EPA Method 8081															
Matrix: Water															
Units: ug/L															
				Environmental Samples											
			Field ID:		SS02-MW2-01		SS02-MW2-01				SS02-MW3-01		SS02-MW3-01		
			Batch ID:		H792		H792				H792		H792		
	DB-5	DB-608		DB-5	DB-5	DB-608	DB-608			DB-5	DB-5	DB-608	DB-608		
Parameters	MDL	MDL		PQL	Result	PQL	Result	Validity	Comments	PQL	Result	PQL	Result	Validity	Comments
alpha BHC	0.002	0.001		0.01	ND	0.01	ND	U	g	0.01	ND	0.01	ND	U	g
beta BHC	0.002	0.003		0.01	ND	0.01	ND	U	g	0.01	ND	0.01	ND	U	g
delta BHC	0.002	0.002		0.01	ND	0.01	ND	U	g	0.01	0.05	0.01	ND	U	h
gamma BHC (Lindane)	0.002	0.002		0.01	0.03	0.01	ND	U	h	0.01	ND	0.01	ND	U	g
Heptachlor	0.004	0.004		0.01	ND	0.01	ND	U	g	0.01	ND	0.01	ND	U	g
Aldrin	0.005	0.010		0.02	ND	0.03	ND	U	g	0.02	ND	0.03	ND	U	g
Heptachlor Epoxide	0.003	0.002		0.01	0.02	0.01	ND	U	h	0.01	0.08	0.01	ND	U	h
Endosulfan I	0.004	0.004		0.01	ND	0.01	ND	U	g	0.01	ND	0.01	ND	U	g
Dieldrin	0.004	0.005		0.02	ND	0.01	ND	U	g	0.02	ND	0.01	ND	U	g
4,4'-DDE	0.009	0.010		0.029	0.074	0.032	0.062		g	0.029	0.066	0.032	0.057		g
Endrin	0.004	0.004		0.014	0.029	0.012	ND	U	h	0.014	ND	0.012	ND	U	g
Endosulfan II	0.007	0.005		0.021	ND	0.015	ND	U	k	0.021	ND	0.015	ND	U	k
4,4'-DDD	0.005	0.004		0.017	0.057	0.014	0.15		g	0.017	0.057	0.014	0.11		g
Endosulfan Sulfate	0.003	0.003		0.01	ND	0.01	ND	U	g	0.01	ND	0.01	ND	U	g
4,4'-DDT	0.010	0.008		0.031	0.40	0.026	0.39		g	0.031	0.27	0.026	0.25		g
Methoxychlor	0.038	0.035		0.12	ND	0.11	ND	U	g	0.12	ND	0.11	ND	U	g
Endrin Aldehyde	0.010	0.010		0.031	ND	0.031	ND	U	g	0.031	ND	0.031	ND	U	g
gamma-Chlordane	0.003	0.003		0.01	ND	0.01	ND	U	g	0.01	ND	0.01	ND	U	g
alpha-Chlordane	0.003	0.004		0.01	ND	0.01	ND	U	g	0.01	0.01	0.01	ND	U	h
Toxaphene	0.25	0.15		0.79	ND	0.46	ND	U	g	0.79	ND	0.46	ND	U	g
Arochlor 1016	0.3	0.3		0.9	ND	0.9	ND	U	g	0.9	ND	0.9	ND	U	g
Arochlor 1242	0.2	0.3		0.7	ND	1.0	ND	U	g	0.7	ND	1.0	ND	U	g
Arochlor 1248	0.2	0.2		0.8	ND	0.7	ND	U	g	0.8	ND	0.7	ND	U	g
Arochlor 1254	0.2	0.3		1.0	ND	1.0	ND	U	g	1.0	ND	1.0	ND	U	g
Arochlor 1260	0.3	0.3		1.0	ND	0.9	ND	U	g	1.0	ND	0.9	ND	U	g
Arochlor 1221	0.2	0.2		0.8	ND	0.8	ND	U	g	0.8	ND	0.8	ND	U	g
Arochlor 1232	0.3	0.3		0.8	ND	1.1	ND	U	g	0.8	ND	1.1	ND	U	g

Base: Kotzebue LRRS							Table 2.2.4								
Site: SS2							Analytical Data Summary								
Extraction Method: EPA Method 3510							EPA Method 8081								
Analytical Method: EPA Method 8081															
Matrix: Water															
Units: ug/L															
				Environmental Samples											
			Field ID:		SS02-MW4-01		SS02-MW4-01								
			Batch ID:		H792		H792								
	DB-5	DB-608		DB-5	DB-5	DB-608	DB-608								
Parameters	MDL	MDL		PQL	Result	PQL	Result	Validity	Comments						
alpha BHC	0.002	0.001		0.01	ND	0.01	ND	U	g						
beta BHC	0.002	0.003		0.01	ND	0.01	ND	U	g						
delta BHC	0.002	0.002		0.01	ND	0.01	ND	U	g						
gamma BHC (Lindane)	0.002	0.002		0.01	0.03	0.01	ND	U	h						
Heptachlor	0.004	0.004		0.01	ND	0.01	ND	U	g						
Aldrin	0.005	0.010		0.02	ND	0.03	ND	U	g						
Heptachlor Epoxide	0.003	0.002		0.01	0.01	0.01	ND	U	h						
Endosulfan I	0.004	0.004		0.01	ND	0.01	ND	U	g						
Dieldrin	0.004	0.005		0.02	ND	0.01	ND	U	g						
4,4'-DDE	0.009	0.010		0.029	0.071	0.032	0.060		g						
Endrin	0.004	0.004		0.014	0.027	0.012	ND	U	h						
Endosulfan II	0.007	0.005		0.021	ND	0.015	ND	U	k						
4,4'-DDD	0.005	0.004		0.017	0.053	0.014	0.13		g						
Endosulfan Sulfate	0.003	0.003		0.01	ND	0.01	ND	U	g						
4,4'-DDT	0.010	0.008		0.031	0.34	0.026	0.32		g						
Methoxychlor	0.038	0.035		0.12	ND	0.11	ND	U	g						
Endrin Aldehyde	0.010	0.010		0.031	ND	0.031	ND	U	g						
gamma-Chlordane	0.003	0.003		0.01	ND	0.01	ND	U	g						
alpha-Chlordane	0.003	0.004		0.01	ND	0.01	ND	U	g						
Toxaphene	0.25	0.15		0.79	ND	0.46	ND	U	g						
Arochlor 1016	0.3	0.3		0.9	ND	0.9	ND	U	g						
Arochlor 1242	0.2	0.3		0.7	ND	1.0	ND	U	g						
Arochlor 1248	0.2	0.2		0.8	ND	0.7	ND	U	g						
Arochlor 1254	0.2	0.3		1.0	ND	1.0	ND	U	g						
Arochlor 1260	0.3	0.3		1.0	ND	0.9	ND	U	g						
Arochlor 1221	0.2	0.2		0.8	ND	0.8	ND	U	g						
Arochlor 1232	0.3	0.3		0.8	ND	1.1	ND	U	g						

Base: Kotzebue LRRS
Site: SS2
Extraction Method: EPA Method 8260
Analytical Method: EPA Method 8260
Matrix: Water
Units: ug/L

Table 2.2.5
Analytical Data Summary
EPA Method 8260

Environmental Samples

		Field ID:	SS02-SW1-01			
		Batch ID:	H718			
Parameters	MDL	PQL	Result	Validity	Comments	
Chloromethane	1.03	3	ND	U	g	
Bromomethane	0.42	2	ND	U	g	
Vinyl Chloride	0.52	2	ND	U	g	
Chloroethane	0.59	2	ND	U	g	
Methylene Chloride	0.41	1	ND	U	g	
Acetone	2.90	9	ND	U	g	
Carbon Disulfide	0.40	2	ND	U	g	
1,1-Dichloroethene	0.71	2	ND	U	g	
1,1-Dichloroethane	0.50	2	ND	U	g	
trans-1,2-Dichloroethene	0.42	1	ND	U	g	
cis-1,2-Dichloroethylene	0.43	2	ND	U	g	
Chloroform	0.26	1	ND	U	g	
1,2-Dichloroethane	0.69	2	ND	U	g	
Methyl Ethyl Ketone (2-butanone)	0.52	2	ND	U	g	
1,1,1-Trichloroethane	0.54	2	ND	U	g	
Carbon Tetrachloride	0.42	2	ND	U	g	
Vinyl Acetate	0.52	2	ND	U	g	
Bromodichloromethane	0.44	2	ND	U	g	
1,2-Dichloropropane	0.48	2	ND	U	g	
cis-1,3-Dichloropropene	0.38	1	ND	U	g	
Trichloroethylene (tce)	0.18	1	ND	U	g	
Dibromochloromethane	0.24	1	ND	U	g	
1,1,2-Trichloroethane	0.42	1	ND	U	g	
Benzene	0.42	2	ND	U	g	

Base: Kotzebue LRRS						Table 2.2.5						
Site: SS2						Analytical Data Summary						
Extraction Method: EPA Method 8260						EPA Method 8260						
Analytical Method: EPA Method 8260												
Matrix: Water												
Units: ug/L												
			Environmental Samples									
		Field ID:		SS02-SW1-01								
		Batch ID:		H718								
Parameters	MDL		PQL	Result	Validity	Comments						
trans-1,3-Dichloropropene	0.48		2	ND	U	g						
2-Chloroethyl Vinyl Ether	0.82		3	ND	U	g						
Bromoform	0.48		2	ND	U	g						
Methyl Isobutyl Ketone	1.22		4	ND	U	g						
2-Hexanone	0.72		2	ND	U	g						
Tetrachloroethylene (pce)	0.30		1	ND	U	g						
1,1,2,2-Tetrachloroethane	0.56		2	ND	U	g						
Toluene	0.46		2	ND	U	g						
Chlorobenzene	0.20		1	ND	U	g						
Ethylbenzene	0.28		1	ND	U	g						
Styrene	0.08		1	ND	U	g						
1,1,2-Trichloro-1,2,2-trifluoroethane	0.37		1	ND	U	g						
Xylenes, total	0.68		2	ND	U	g						
1,1,1,2-Tetrachloroethane	0.46		2	ND	U	g						
1,2,3-Trichloropropane	0.41		1	ND	U	g						
Bromochloromethane	0.24		1	ND	U	g						
1-Chlorohexane	1.68		5	ND	U	g						
Bromobenzene	0.43		2	ND	U	g						

Base: Kotzebue LRRS
Site: SS2
Extraction Method: EPA Method 8260
Analytical Method: EPA Method 8260
Matrix: Water
Units: ug/L

Table 2.2.6
Analytical Data Summary
EPA Method 8260

Environmental Samples

Field ID:		SS02-MW1-01	
Batch ID:		H772	
Parameters	MDL	PQL	Result	Validity	Comments
---	---	---	---	---	---
Chloromethane	1.03	3	ND	U	g
Bromomethane	0.42	2	ND	U	g
Vinyl Chloride	0.52	2	ND	U	g
Chloroethane	0.59	2	ND	U	g
Methylene Chloride	0.41	1	ND	U	g
Acetone	2.90	9	ND	U	g
Carbon Disulfide	0.40	2	ND	U	g
1,1-Dichloroethene	0.71	2	ND	U	g
1,1-Dichloroethane	0.50	2	ND	U	g
trans-1,2-Dichloroethene	0.42	1	ND	U	g
cis-1,2-Dichloroethylene	0.43	2	ND	U	g
Chloroform	0.26	1	ND	U	g
1,2-Dichloroethane	0.69	2	ND	U	g
Methyl Ethyl Ketone (2-butanone)	0.52	2	ND	U	g
1,1,1-Trichloroethane	0.54	2	ND	U	g
Carbon Tetrachloride	0.42	2	ND	U	g
Vinyl Acetate	0.52	2	ND	U	g
Bromodichloromethane	0.44	2	ND	U	g
1,2-Dichloropropane	0.48	2	ND	U	g
cis-1,3-Dichloropropene	0.38	1	ND	U	g
Trichloroethylene (tce)	0.18	1	ND	U	g
Dibromochloromethane	0.24	1	ND	U	g
1,1,2-Trichloroethane	0.42	1	ND	U	g
Benzene	0.42	2	ND	U	g

Base: Kotzebue LRRS						Table 2.2.6						
Site: SS2						Analytical Data Summary						
Extraction Method: EPA Method 8260						EPA Method 8260						
Analytical Method: EPA Method 8260												
Matrix: Water												
Units: ug/L												
			Environmental Samples									
		Field ID:		SS02-MW1-01								
		Batch ID:		H772								
Parameters	MDL		PQL	Result	Validity	Comments						
trans-1,3-Dichloropropene	0.48		2	ND	U	g						
2-Chloroethyl Vinyl Ether	0.82		3	ND	U	g						
Bromoform	0.48		2	ND	U	g						
Methyl Isobutyl Ketone	1.22		4	ND	U	g						
2-Hexanone	0.72		2	ND	U	g						
Tetrachloroethylene (pce)	0.30		1	ND	U	g						
1,1,2,2-Tetrachloroethane	0.56		2	ND	U	g						
Toluene	0.46		2	ND	U	g						
Chlorobenzene	0.20		1	ND	U	g						
Ethylbenzene	0.28		1	ND	U	g						
Styrene	0.08		1	ND	U	g						
1,1,2-Trichloro-1,2,2-trifluoroethane	0.37		1	ND	U	g						
Xylenes, total	0.68		2	ND	U	g						
1,1,1,2-Tetrachloroethane	0.46		2	ND	U	g						
1,2,3-Trichloropropane	0.41		1	ND	U	g						
Bromochloromethane	0.24		1	ND	U	g						
1-Chlorohexane	1.68		5	ND	U	g						
Bromobenzene	0.43		2	ND	U	g						

Base: Kotzebue LRRS						Table 2.2.6								
Site: SS2						Analytical Data Summary								
Extraction Method: EPA Method 8260						EPA Method 8260								
Analytical Method: EPA Method 8260														
Matrix: Water														
Units: ug/L														
			Environmental Samples											
		Field ID:		SS02-MW2-01				SS02-MW3-01				SS02-MW4-01		
		Batch ID:		H792				H792				H792		
Parameters	MDL		PQL	Result	Validity	Comments	PQL	Result	Validity	Comments	PQL	Result	Validity	Comments
Chloromethane	1.03		3	ND	U	g	3	ND	U	g	3	ND	U	g
Bromomethane	0.42		2	ND	U	g	2	ND	U	g	2	ND	U	g
Vinyl Chloride	0.52		2	ND	U	g	2	ND	U	g	2	ND	U	g
Chloroethane	0.59		2	ND	U	g	2	ND	U	g	2	ND	U	g
Methylene Chloride	0.41		1	ND	U	g	1	ND	U	g	1	ND	U	g
Acetone	2.90		9	ND	U	g	9	ND	U	g	9	ND	U	g
Carbon Disulfide	0.40		2	ND	U	g	2	ND	U	g	2	ND	U	g
1,1-Dichloroethene	0.71		2	ND	U	g	2	ND	U	g	2	ND	U	g
1,1-Dichloroethane	0.50		2	ND	U	g	2	ND	U	g	2	ND	U	g
trans-1,2-Dichloroethene	0.42		1	ND	U	g	1	ND	U	g	1	ND	U	g
cis-1,2-Dichloroethylene	0.43		2	ND	U	g	2	ND	U	g	2	ND	U	g
Chloroform	0.26		1	ND	U	g	1	ND	U	g	1	1		g
1,2-Dichloroethane	0.69		2	ND	U	g	2	ND	U	g	2	ND	U	g
Methyl Ethyl Ketone (2-butanone)	0.52		2	ND	U	g	2	ND	U	g	2	ND	U	g
1,1,1-Trichloroethane	0.54		2	ND	U	g	2	ND	U	g	2	ND	U	g
Carbon Tetrachloride	0.42		2	ND	U	g	2	ND	U	g	2	ND	U	g
Vinyl Acetate	0.52		2	ND	U	g	2	ND	U	g	2	ND	U	g
Bromodichloromethane	0.44		2	ND	U	g	2	ND	U	g	2	ND	U	g
1,2-Dichloropropane	0.48		2	ND	U	g	2	ND	U	g	2	ND	U	g
cis-1,3-Dichloropropene	0.38		1	ND	U	g	1	ND	U	g	1	ND	U	g
Trichloroethylene (tce)	0.18		1	2		g	1	ND	U	g	1	2		g
Dibromochloromethane	0.24		1	ND	U	g	1	ND	U	g	1	ND	U	g
1,1,2-Trichloroethane	0.42		1	ND	U	g	1	ND	U	g	1	ND	U	g
Benzene	0.42		2	ND	U	g	2	ND	U	g	2	ND	U	g

Base: Kotzebue LRRS						Table 2.2.5								
Site: SS2						Analytical Data Summary								
Extraction Method: EPA Method 8260						EPA Method 8260								
Analytical Method: EPA Method 8260														
Matrix: Water														
Units: ug/L														
			Environmental Samples											
		Field ID:		SS02-MW2-01				SS02-MW3-01				SS02-MW4-01		
		Batch ID:		H792				H792				H792		
Parameters	MDL		PQL	Result	Validity	Comments	PQL	Result	Validity	Comments	PQL	Result	Validity	Comments
trans-1,3-Dichloropropene	0.48		2	ND	U	g	2	ND	U	g	2	ND	U	g
2-Chloroethyl Vinyl Ether	0.82		3	ND	U	g	3	ND	U	g	3	ND	U	g
Bromoform	0.48		2	ND	U	g	2	ND	U	g	2	ND	U	g
Methyl Isobutyl Ketone	1.22		4	ND	U	g	4	ND	U	g	4	ND	U	g
2-Hexanone	0.72		2	ND	U	g	2	ND	U	g	2	ND	U	g
Tetrachloroethylene (pce)	0.30		1	ND	U	g	1	ND	U	g	1	ND	U	g
1,1,2,2-Tetrachloroethane	0.56		2	ND	U	g	2	ND	U	g	2	ND	U	g
Toluene	0.46		2	ND	U	g	2	ND	U	g	2	ND	U	g
Chlorobenzene	0.20		1	ND	U	g	1	ND	U	g	1	ND	U	g
Ethylbenzene	0.28		1	ND	U	g	1	ND	U	g	1	ND	U	g
Styrene	0.08		1	ND	U	g	1	ND	U	g	1	ND	U	g
1,1,2-Trichloro-1,2,2-trifluoroethane	0.37		1	ND	U	g	1	ND	U	g	1	ND	U	g
Xylenes, total	0.68		2	ND	U	g	2	4		g	2	ND	U	g
1,1,1,2-Tetrachloroethane	0.46		2	ND	U	g	2	ND	U	g	2	ND	U	g
1,2,3-Trichloropropane	0.41		1	ND	U	g	1	ND	U	g	1	ND	U	g
Bromochloromethane	0.24		1	ND	U	g	1	ND	U	g	1	ND	U	g
1-Chlorohexane	1.68		5	ND	U	g	5	ND	U	g	5	ND	U	g
Bromobenzene	0.43		2	ND	U	g	2	ND	U	g	2	ND	U	g

Base: Kotzebue LRRS						Table 2.2.2.6							
Site: SS02						Analytical Data Summary							
Extraction Method: EPA Method 3520						EPA Method 8270							
Analytical Method: EPA Method 8270													
Matrix: Water													
Units: ug/L													
			Environmental Samples										
		Field ID:		SS02-SW1-01									
		Batch ID:		H718									
Parameters	MDL		PQL	Result	Validity	Comments							
Phenol	0.9		3	ND	U	d							
bis(2-Chloroethyl) Ether	1.9		6	ND	U	d							
2-Chlorophenol	0.2		1	ND	U	d							
1,3-Dichlorobenzene	0.3		1	1	B	d							
1,4-Dichlorobenzene	0.3		1	ND	U	d							
Benzyl Alcohol	0.7		2	ND	U	d							
1,2-Dichlorobenzene	0.2		1	ND	U	d							
2-Methylphenol	0.2		1	ND	U	d							
2,2'-Oxybis (1-Chloropropane)	0.2		1	ND	U	d							
4-Methylphenol	0.6		2	ND	U	d							
N-Nitrosodi-n-propylamine	1.3		4	ND	U	d							
Hexachloroethane	0.6		2	ND	U	d							
Nitrobenzene	0.3		1	ND	U	d							
Isophorone	0.5		2	ND	U	d							
2-Nitrophenol	0.5		2	ND	U	d							
2,4-Dimethylphenol	2.6		8	ND	U	d							
Benzoic Acid	3.1		10	ND	U	d							
bis(2-Chloroethoxy) Methane	0.5		2	ND	U	d							
2,4-Dichlorophenol	1.0		3	ND	U	d							
1,2,4-Trichlorobenzene	0.2		1	ND	U	d							
Naphthalene	0.2		1	ND	U	d							
4-Chloroaniline	2.0		6	ND	U	d							
Hexachlorobutadiene	0.7		2	ND	U	d							
4-Chloro-3-Methylphenol	1.1		3	ND	U	d							
2-Methylnaphthalene	0.6		2	ND	U	d							
Hexachlorocyclopentadiene	2.9		9	ND	U	d							
2,4,6-Trichlorophenol	1.5		5	ND	U	d							
2,4,5-Trichlorophenol	1.3		4	ND	U	d							
2-Chloronaphthalene	0.5		2	ND	U	d							
2-Nitroaniline	1.3		4	ND	U	d							
Dimethyl Phthalate	0.7		2	ND	U	d							
Acenaphthylene	0.6		2	ND	U	d							
3-Nitroaniline	5.4		20	ND	U	d							
Acenaphthene	0.6		2	ND	U	d							
2,4-Dinitrophenol	8.4		30	ND	U	d							
4-Nitrophenol	1.6		5	ND	U	d							
Dibenzofuran	0.6		2	ND	U	d							
2,6-Dinitrotoluene	1.5		5	ND	U	d							

Base: Kotzebue LRRS						Table 2.2.2.6								
Site: SS02						Analytical Data Summary								
Extraction Method: EPA Method 3520						EPA Method 8270								
Analytical Method: EPA Method 8270														
Matrix: Water														
Units: ug/L														
			Environmental Samples											
		Field ID:		SS02-SW1-01										
		Batch ID:		H718										
Parameters	MDL		PQL	Result	Validity	Comments								
2,4-Dinitrotoluene	1.3		4	ND	U	d								
Diethyl Phthalate	1.0		3	ND	U	d								
4-Chlorophenyl Phenyl Ether	0.5		2	ND	U	d								
Fluorene	0.5		2	ND	U	d								
4-Nitroaniline	4.5		10	ND	U	d								
4,6-Dinitro-2-Methylphenol	2.7		9	ND	U	d								
N-Nitrosodiphenylamine	0.6		2	ND	U	d								
4-Bromophenyl Phenyl Ether	0.6		2	ND	U	d								
Hexachlorobenzene	0.6		2	ND	U	d								
Pentachlorophenol	3.7		10	ND	U	d								
Phenanthrene	0.6		2	ND	U	d								
Anthracene	0.7		2	ND	U	d								
di-n-butyl Phthalate	1.0		3	ND	U	d								
Fluroanthene	0.6		2	ND	U	d								
Pyrene	0.6		2	ND	U	d								
Butylbenzylphthalate	0.7		2	ND	U	d								
3,3'-Dichlorobenzidine	2.1		7	ND	U	d								
Benzo(a)anthracene	0.6		2	ND	U	d								
bis(2-Ethylhexyl) Phthalate	0.6		2	ND	U	d								
Chrysene	0.6		2	ND	U	d								
di-n-Octylphthalate	0.6		2	ND	U	d								
Benzo(b)fluoranthene	0.6		2	ND	U	d								
Benzo(k)fluoranthene	0.8		3	ND	U	d								
Benzo(a)pyrene	0.7		2	ND	U	d								
Indeno(1,2,3-c,d)pyrene	0.5		2	ND	U	d								
Dibenzo(a,h)anthracene	0.6		2	ND	U	d								
Benzo(g,h,i)perylene	0.5		2	ND	U	d								

Base: Kotzebue LRRS						Table 2.2.2.6								
Site: SS02						Analytical Data Summary								
Extraction Method: EPA Method 3520						EPA Method 8270								
Analytical Method: EPA Method 8270														
Matrix: Water														
Units: ug/L														
			Environmental Samples											
		Field ID:		SS02-MW1-01										
		Batch ID:		H772										
Parameters	MDL		PQL	Result	Validity	Comments								
Phenol	0.9		3	ND	U	g								
bis(2-Chloroethyl) Ether	1.9		6	ND	U	g								
2-Chlorophenol	0.2		1	ND	U	g								
1,3-Dichlorobenzene	0.3		1	3		g								
1,4-Dichlorobenzene	0.3		1	ND	U	g								
Benzyl Alcohol	0.7		2	ND	U	g								
1,2-Dichlorobenzene	0.2		1	ND	U	g								
2-Methylphenol	0.2		1	ND	U	g								
2,2'-Oxybis (1-Chloropropane)	0.2		1	ND	U	g								
4-Methylphenol	0.6		2	ND	U	g								
N-Nitrosodi-n-propylamine	1.3		4	ND	U	g								
Hexachloroethane	0.6		2	ND	U	g								
Nitrobenzene	0.3		1	ND	U	g								
Isophorone	0.5		2	ND	U	g								
2-Nitrophenol	0.5		2	ND	U	g								
2,4-Dimethylphenol	2.6		8	ND	U	g								
Benzoic Acid	3.1		10	ND	U	g								
bis(2-Chloroethoxy) Methane	0.5		2	ND	U	g								
2,4-Dichlorophenol	1.0		3	ND	U	g								
1,2,4-Trichlorobenzene	0.2		1	ND	U	g								
Naphthalene	0.2		1	ND	U	g								
4-Chloroaniline	2.0		6	ND	U	g								
Hexachlorobutadiene	0.7		2	ND	U	g								
4-Chloro-3-Methylphenol	1.1		3	ND	U	g								
2-Methylnaphthalene	0.6		2	ND	U	g								
Hexachlorocyclopentadiene	2.9		9	ND	U	g								
2,4,6-Trichlorophenol	1.5		5	ND	U	g								
2,4,5-Trichlorophenol	1.3		4	ND	U	g								
2-Chloronaphthalene	0.5		2	ND	U	g								
2-Nitroaniline	1.3		4	ND	U	g								
Dimethyl Phthalate	0.7		2	ND	U	g								
Acenaphthylene	0.6		2	ND	U	g								
3-Nitroaniline	5.4		20	ND	U	g								
Acenaphthene	0.6		2	ND	U	g								
2,4-Dinitrophenol	8.4		30	ND	U	g								
4-Nitrophenol	1.6		5	ND	U	g								
Dibenzofuran	0.6		2	ND	U	g								
2,6-Dinitrotoluene	1.5		5	ND	U	g								

Base: Kotzebue LRRS						Table 2.2.2.6								
Site: SS02						Analytical Data Summary								
Extraction Method: EPA Method 3520						EPA Method 8270								
Analytical Method: EPA Method 8270														
Matrix: Water														
Units: ug/L														
			Environmental Samples											
		Field ID:		SS02-MW1-01										
		Batch ID:		H772										
Parameters	MDL		PQL	Result	Validity	Comments								
2,4-Dinitrotoluene	1.3		4	ND	U	g								
Diethyl Phthalate	1.0		3	ND	U	g								
4-Chlorophenyl Phenyl Ether	0.5		2	ND	U	g								
Fluorene	0.5		2	ND	U	g								
4-Nitroaniline	4.5		10	ND	U	g								
4,6-Dinitro-2-Methylphenol	2.7		9	ND	U	g								
N-Nitrosodiphenylamine	0.6		2	ND	U	g								
4-Bromophenyl Phenyl Ether	0.6		2	ND	U	g								
Hexachlorobenzene	0.6		2	ND	U	g								
Pentachlorophenol	3.7		10	ND	U	g								
Phenanthrene	0.6		2	ND	U	g								
Anthracene	0.7		2	ND	U	g								
di-n-butyl Phthalate	1.0		3	ND	U	g								
Fluroanthene	0.6		2	ND	U	g								
Pyrene	0.6		2	ND	U	g								
Butylbenzylphthalate	0.7		2	ND	U	g								
3,3'-Dichlorobenzidine	2.1		7	ND	U	g								
Benzo(a)anthracene	0.6		2	ND	U	g								
bis(2-Ethylhexyl) Phthalate	0.6		2	ND	U	g								
Chrysene	0.6		2	ND	U	g								
di-n-Octylphthalate	0.6		2	ND	U	g								
Benzo(b)fluoranthene	0.6		2	ND	U	g								
Benzo(k)fluoranthene	0.8		3	ND	U	g								
Benzo(a)pyrene	0.7		2	ND	U	g								
Indeno(1,2,3-c,d)pyrene	0.5		2	ND	U	g								
Dibenzo(a,h)anthracene	0.6		2	ND	U	g								
Benzo(g,h,i)perylene	0.5		2	ND	U	g								

Base: Kotzebue LRRS
Site: SS02
Extraction Method: EPA Method 3520
Analytical Method: EPA Method 8270
Matrix: Water
Units: ug/L

Table 2.2.2.6
Analytical Data Summary
EPA Method 8270

Environmental Samples

		Field ID:		SS02-MW2-01				SS02-MW3-01				SS02-MW4-01		
		Batch ID:		H792				H792				H792		
Parameters	MDL		PQL	Result	Validity	Comments	PQL	Result	Validity	Comments	PQL	Result	Validity	Comments
Phenol	0.9		3	ND	U	g	3	ND	U	g	3	ND	U	g
bis(2-Chloroethyl) Ether	1.9		6	ND	U	g	6	ND	U	g	6	ND	U	g
2-Chlorophenol	0.2		1	ND	U	g	1	ND	U	g	1	ND	U	g
1,3-Dichlorobenzene	0.3		1	1	B	k	1	1	B	k	1	1	B	k
1,4-Dichlorobenzene	0.3		1	ND	U	g	1	ND	U	g	1	ND	U	g
Benzyl Alcohol	0.7		2	ND	U	g	2	ND	U	g	2	ND	U	g
1,2-Dichlorobenzene	0.2		1	ND	U	g	1	ND	U	g	1	ND	U	g
2-Methylphenol	0.2		1	ND	U	g	1	ND	U	g	1	ND	U	g
2,2'-Oxybis (1-Chloropropane)	0.2		1	ND	U	g	1	ND	U	g	1	ND	U	g
4-Methylphenol	0.6		2	ND	U	g	2	ND	U	g	2	ND	U	g
N-Nitrosodi-n-propylamine	1.3		4	ND	U	g	4	ND	U	g	4	ND	U	g
Hexachloroethane	0.6		2	ND	U	g	2	ND	U	g	2	ND	U	g
Nitrobenzene	0.3		1	ND	U	g	2	ND	U	g	1	ND	U	g
Isophorone	0.5		2	ND	U	g	2	ND	U	g	2	ND	U	g
2-Nitrophenol	0.5		2	ND	U	g	2	ND	U	g	2	ND	U	g
2,4-Dimethylphenol	2.6		8	ND	U	g	8	ND	U	g	8	ND	U	g
Benzoic Acid	3.1		10	ND	U	g	10	ND	U	g	10	ND	U	g
bis(2-Chloroethoxy) Methane	0.5		2	ND	U	g	2	ND	U	g	2	ND	U	g
2,4-Dichlorophenol	1.0		3	ND	U	g	3	ND	U	g	3	ND	U	g
1,2,4-Trichlorobenzene	0.2		1	ND	U	g	1	ND	U	g	1	ND	U	g
Naphthalene	0.2		1	ND	U	g	4	ND	U	g	1	ND	U	g
4-Chloroaniline	2.0		6	ND	U	g	6	ND	U	g	6	ND	U	g
Hexachlorobutadiene	0.7		2	ND	U	g	2	ND	U	g	2	ND	U	g
4-Chloro-3-Methylphenol	1.1		3	ND	U	g	3	ND	U	g	3	ND	U	g
2-Methylnaphthalene	0.6		2	ND	U	g	2	2		g	2	ND	U	g
Hexachlorocyclopentadiene	2.9		9	ND	U	g	9	ND	U	g	9	ND	U	g
2,4,6-Trichlorophenol	1.5		5	ND	U	g	5	ND	U	g	5	ND	U	g
2,4,5-Trichlorophenol	1.3		4	ND	U	g	4	ND	U	g	4	ND	U	g
2-Chloronaphthalene	0.5		2	ND	U	g	2	ND	U	g	2	ND	U	g
2-Nitroaniline	1.3		4	ND	U	g	4	ND	U	g	4	ND	U	g
Dimethyl Phthalate	0.7		2	ND	U	g	2	ND	U	g	2	ND	U	g
Acenaphthylene	0.6		2	ND	U	g	2	ND	U	g	2	ND	U	g
3-Nitroaniline	5.4		20	ND	U	g	20	ND	U	g	20	ND	U	g
Acenaphthene	0.6		2	ND	U	g	2	1		g	2	ND	U	g
2,4-Dinitrophenol	8.4		30	ND	U	g	30	ND	U	g	30	ND	U	g
4-Nitrophenol	1.6		5	ND	U	g	5	ND	U	g	5	ND	U	g
Dibenzofuran	0.6		2	ND	U	g	2	ND	U	g	2	ND	U	g
2,6-Dinitrotoluene	1.5		5	ND	U	g	5	ND	U	g	5	ND	U	g

Base: Kotzebue LRRS						Table 2.2.2.6								
Site: SS02						Analytical Data Summary								
Extraction Method: EPA Method 3520						EPA Method 8270								
Analytical Method: EPA Method 8270														
Matrix: Water														
Units: ug/L														
			Environmental Samples											
		Field ID:		SS02-MW2-01				SS02-MW3-01				SS02-MW4-01		
		Batch ID:		H792				H792				H792		
Parameters	MDL		PQL	Result	Validity	gomments	PQL	Result	Validity	gomments	PQL	Result	Validity	gomments
2,4-Dinitrotoluene	1.3		4	ND	U	g	4	ND	U	g	4	ND	U	g
Diethyl Phthalate	1.0		3	ND	U	g	3	ND	U	g	3	ND	U	g
4-Chlorophenyl Phenyl Ether	0.5		2	ND	U	g	2	ND	U	g	2	ND	U	g
Fluorene	0.5		2	ND	U	g	2	2		g	2	ND	U	g
4-Nitroaniline	4.5		10	ND	U	g	10	ND	U	g	10	ND	U	g
4,6-Dinitro-2-Methylphenol	2.7		9	ND	U	g	9	ND	U	g	9	ND	U	g
N-Nitrosodiphenylamine	0.6		2	ND	U	g	2	ND	U	g	2	ND	U	g
4-Bromophenyl Phenyl Ether	0.6		2	ND	U	g	2	ND	U	g	2	ND	U	g
Hexachlorobenzene	0.6		2	ND	U	g	2	ND	U	g	2	ND	U	g
Pentachlorophenol	3.7		10	ND	U	g	10	ND	U	g	10	ND	U	g
Phenanthrene	0.6		2	ND	U	g	2	1	J		2	ND	U	g
Anthracene	0.7		2	ND	U	g	2	ND	U	g	2	ND	U	g
di-n-butyl Phthalate	1.0		3	ND	U	g	3	ND	U	g	3	ND	U	g
Fluroanthene	0.6		2	ND	U	g	2	ND	U	g	2	ND	U	g
Pyrene	0.6		2	ND	U	g	2	ND	U	g	2	ND	U	g
Butylbenzylphthalate	0.7		2	ND	U	g	2	ND	U	g	2	ND	U	g
3,3'-Dichlorobenzidine	2.1		7	ND	U	g	7	ND	U	g	7	ND	U	g
Benzo(a)anthracene	0.6		2	ND	U	g	2	ND	U	g	2	ND	U	g
bis(2-Ethylhexyl) Phthalate	0.6		2	ND	U	g	2	ND	U	g	2	7		g
Chrysene	0.6		2	ND	U	g	2	ND	U	g	2	ND	U	g
di-n-Octylphthalate	0.6		2	ND	U	g	2	2		g	2	ND	U	g
Benzo(b)fluoranthene	0.6		2	ND	U	g	2	ND	U	g	2	ND	U	g
Benzo(k)fluoranthene	0.8		3	ND	U	g	3	ND	U	g	3	ND	U	g
Benzo(a)pyrene	0.7		2	ND	U	g	2	ND	U	g	2	ND	U	g
Indeno(1,2,3-c,d)pyrene	0.5		2	ND	U	g	2	ND	U	g	2	ND	U	g
Dibenzo(a,h)anthracene	0.6		2	ND	U	g	2	ND	U	g	2	ND	U	g
Benzo(g,h,i)perylene	0.5		2	ND	U	g	2	ND	U	g	2	ND	U	g

Base: Kotzebue LRRS						Table 2.2.7						
Site: SS2						Analytical Data Summary						
Extraction Method: EPA Method 9060						EPA Method 9060						
Analytical Method: EPA Method 9060												
Matrix: Water												
Units: mg/L												
			Environmental Samples									
		Field ID:		SS02-MW3-01								
		Batch ID:		H792								
Parameters	MDL		PQL	Result	Validity	Comments						
Total Organic Carbon	0.2		0.60	10.5		g						

Base: Kotzebue LRRS							Table 2.3.1							
Site: SS2							Analytical Data Summary							
Extraction Method: EPA Method 3550							EPA Method 6010 TCLP							
Analytical Method: EPA Method 6010 TCLP														
Matrix: Soil														
Units: ug/L														
			Environmental Samples											
		Field ID:		SS02-TAR-01										
		Batch ID:		H859										
Parameters	MDL		PQL	Result	Validity	Comments								
Arsenic	NR*		0.1	ND	U	g								
Barium	NR*		0.0	0.65		a								
Cadmium	NR*		0.0	ND	U	g								
Chromium	NR*		0.0	ND	U	g								
Lead	NR*		0.0	ND	U	g								
Selenium	NR*		0.1	ND	U	g								
Silver	NR*		0.0	ND	U	g								
* Not MDL's have been provided for TCLP Methods.														

Base: Kotzebue LRRS						Table 2.3.2									
Site: SS2						Analytical Data Summary									
Extraction Method: EPA Method 3550						EPA Method 7000 TCLP									
Analytical Method: EPA Method 7000 TCLP															
Matrix: Soil															
Units: ug/L															
				Environmental Samples											
			Field ID:		SS02-TAR-01										
			Batch ID:		H859										
Parameters	MDL	MDL		PQL	Result	Validity	Comments								
Mercury	NR*	NR*		0.00006	ND	U	g								
* No MDL's have been provided for TCLP Methods.															

Base: Kotzebue LRRS						Table 2.3.3								
Site: SS2						Analytical Data Summary								
Extraction Method: EPA Method 3550						EPA Method 8081 TCLP								
Analytical Method: EPA Method 8081 TCLP														
Matrix: Soil														
Units: mg/kg														
				Environmental Samples										
			Field ID:		SS02-TAR-01									
			Batch ID:		H859									
	DB-5	DB-608		DB-5	DB-5	DB-608	DB-608							
Parameters	MDL	MDL		PQL	Result	PQL	Result	Validity	Comments					
gamma BHC (Lindane)	NR*	NR*		0.05	0.44	0.07	ND	R	e,h					
Heptachlor	NR*	NR*		0.13	ND	0.13	ND	UJ	e					
Heptachlor Epoxide	NR*	NR*		0.09	0.07	0.08	ND	R	a,e,h					
Endrin	NR*	NR*		0.14	0.19	0.12	ND	R	a,e,h					
Methoxychlor	NR*	NR*		1.2	ND	1.1	ND	UJ	e					
gamma-Chlordane	NR*	NR*		0.09	ND	0.09	ND	UJ	e					
alpha-Chlordane	NR*	NR*		0.11	ND	0.11	ND	UJ	e					
Toxaphene	NR*	NR*		7.9	ND	4.6	ND	UJ	e					
* No MDL's have been provided for TCLP Methods.														

Base: Kotzebue LRRS							Table 2.3.4								
Site: SS2							Analytical Data Summary								
Extraction Method: EPA Method 3550							EPA Method 8150 TCLP								
Analytical Method: EPA Method 8150 TCLP															
Matrix: Soil															
Units: ug/L															
				Environmental Samples											
			Field ID:		SS02-TAR-01										
			Batch ID:		H859										
	DB-5	DB-608		DB-5	DB-5	DB-608	DB-608								
Parameters	MDL	MDL		PQL	Result	PQL	Result	Validity	Comments						
2,4,5-TP (Silvex)	NR*	NR*		4.0	ND	4.0	ND	U	g						
2,4-D	NR*	NR*		16	ND	16	ND	U	g						
* No MDL'S have been provided for TCLP Methods.															

Base: Kotzebue LRRS						Table 2.3.5								
Site: SS2						Analytical Data Summary								
Extraction Method: EPA Method 8260						EPA Method 8260 TCLP								
Analytical Method: EPA Method 8260 TCLP														
Matrix: Soil														
Units: ug/L														
			Environmental Samples											
		Field ID:		SS02-TAR-01										
		Batch ID:		H859										
Parameters	MDL		PQL	Result	Validity	Comments								
Vinyl Chloride	NR*		17	ND	U	g								
1,1-Dichloroethene	NR*		23	ND	U	g								
Chloroform	NR*		8	ND	U	g								
1,2-Dichloroethane	NR*		22	ND	U	g								
Methyl Ethyl Ketone (2-butanone)	NR*		17	ND	U	g								
Carbon Tetrachloride	NR*		15	ND	U	g								
Trichloroethene	NR*		6	ND	U	g								
Benzene	NR*		15	ND	U	g								
Tetrachloroethene	NR*		10	ND	U	g								
Chlorobenzene	NR*		6	ND	U	g								
Xylenes, total	NR*		22	ND	U	g								
* No MDL's have been provided for TCLP Methods.														

Base: Kotzebue LRRS						Table 2.3.6							
Site: SS2						Analytical Data Summary							
Extraction Method: EPA Method 3550						EPA Method 8270 TCLP							
Analytical Method: EPA Method 8270 TCLP													
Matrix: Soil													
Units: ug/L													
			Environmental Samples										
		Field ID:		SS02-TAR-01									
		Batch ID:		H859									
Parameters	MDL		PQL	Result	Validity	Comments							
1,4-Dichlorobenzene	NR*		10	ND	U	g							
2-Methylphenol	NR*		6	ND	U	g							
4-Methylphenol	NR*		20	65		g							
Hexachloroethane	NR*		20	ND	U	g							
Nitrobenzene	NR*		10	ND	U	g							
Hexachlorobutadiene	NR*		20	ND	U	g							
2,4,6-Trichlorophenol	NR*		50	ND	U	g							
2,4,5-Trichlorophenol	NR*		40	ND	U	g							
2,4-Dinitrophenol	NR*		40	ND	U	g							
Hexachlorobenzene	NR*		20	ND	U	g							
Pentachlorophenol	NR*		100	ND	U	g							
Pyridine	NR*		100	ND	U	g							
* No MDL's have been provided for TCLP Methods.													

ANALYTICAL DATA SUMMARY
SITE ST04-WHITE ALICE TANKS (AOC9)

Base: Kotzebue LRRS						Table 2.1								
Site: AOC9						Analytical Data Summary								
Extraction Method: EPA Method 3550						Method AK102								
Analytical Method: Method AK102														
Matrix: Soil														
Units: mg/kg														
			Environmental Samples											
		Field ID:		AOC-09-SB1-1.5				AOC-09-SB2-2.0				AOC-09-SB2-2.0DL		
		Batch ID:		H590				H590				H590		
Parameters	MDL		PQL	Result	Validity	Comments	PQL	Result	Validity	Comments	PQL	Result	Validity	Comments
												Dilution 20		
Diesel Hydrocarbons	0.9		3.0	180		g	3.0	2900 E*		n	61	2900		g
* Analyte detected above linear calibration range.														

Base: Kotzebue LRRS						Table 2.1								
Site: AOC9						Analytical Data Summary								
Extraction Method: EPA Method 3550						Method AK102								
Analytical Method: Method AK102														
Matrix: Soil														
Units: mg/kg														
			Environmental Samples											
		Field ID:		AOC-09-SB3-1.5			AOC-09-SB1-1.5DUP							
		Batch ID:		H590				H590						
Parameters	MDL		PQL	Result	Validity	Comments	PQL	Result	Validity	Comments				
Diesel Hydrocarbons	0.9		4.1	79		g	3.0	160		g				

Base: Kotzebue LRRS						Table 2.1							
Site: AOC9						Analytical Data Summary							
Extraction Method: EPA Method 3550						Method AK102							
Analytical Method: Method AK102													
Matrix: Soil													
Units: mg/kg													
			Environmental Samples										
		Field ID:		AOC9-SB4-1.5									
		Batch ID:		H886									
Parameters	MDL		PQL	Result	Validity	Comments							
Diesel Hydrocarbons	0.9		9.7	130		g							

Base: Kotzebue LRRS						Table 2.2									
Site: AOC9						Analytical Data Summary									
Extraction Method: EPA Method 3550						EPA Method 8081									
Analytical Method: EPA Method 8081															
Matrix: Soil															
Units: mg/kg															
				Environmental Samples											
			Field ID:		AOC-09-SB1-1.5		AOC-09-SB1-1.5				AOC-09-SB2-2.0DL		AOC-09-SB2-2.0DL		
			Batch ID:		H590		H590				H590		H590		
	DB-5	DB-608		DB-5	DB-5	DB-608	DB-608			DB-5	DB-5	DB-608	DB-608		
Parameters	MDL	MDL		PQL	Result	PQL	Result	Validity	Comments	PQL	Result	PQL	Result	Validity	Comments
											Dilution 50		Dilution 50		
alpha BHC	0.0001	0.0001		0.00021	ND	0.00019	ND	U	g	0.011	ND	0.0096	ND	UJ	b
beta BHC	0.0001	0.0001		0.00032	0.0010	0.00030	ND	U	h	0.016	ND	0.015	ND	UJ	b
delta BHC	0.0001	0.0001		0.00033	ND	0.00024	ND	U	g	0.017	ND	0.013	ND	UJ	b
gamma BHC (Lindane)	0.0001	0.0001		0.00026	0.0011	0.00021	ND	U	h	0.013	ND	0.011	ND	UJ	b
Heptachlor	0.0001	0.0001		0.0003	ND	0.0003	ND	U	g	0.015	ND	0.015	ND	UJ	b
Aldrin	0.0001	0.0001		0.00020	ND	0.00026	ND	U	g	0.011	ND	0.014	ND	UJ	b
Heptachlor Epoxide	0.0001	0.0001		0.00026	0.00008	0.00033	ND	U	h	0.013	ND	0.017	ND	UJ	b
Endosulfan I	0.0001	0.0001		0.00038	0.00069	0.00038	ND	U	h	0.019	ND	0.019	ND	UJ	b
Dieldrin	0.0001	0.0002		0.0004	ND	0.0005	ND	U	g	0.021	ND	0.026	ND	UJ	b
4,4'-DDE	0.0001	0.0002		0.0003	0.0019	0.0005	0.0018		g	0.017	0.13	0.025	0.12	J	b
Endrin	0.0001	0.0001		0.0003	0.0023	0.0003	0.0053	J	n	0.017	0.036	0.018	0.043	J	n
Endosulfan II	0.0002	0.0002		0.0005	ND	0.0005	ND	U	g	0.028	ND	0.027	ND	UJ	b
4,4'-DDD	0.0001	0.0001		0.0004	0.014	0.0005	0.016		g	0.021	0.19	0.025	0.26	J	b
Endosulfan Sulfate	0.0002	0.0002		0.0008	ND	0.0008	ND	U	g	0.042	ND	0.042	ND	UJ	b
4,4'-DDT	0.0002	0.0001		0.0008	0.013	0.0004	0.015		g	0.039	0.47	0.023	0.49	J	b
Methoxychlor	0.0008	0.0011		0.0028	3.4	0.0036	0.0047	J	n	0.15	ND	0.18	ND	UJ	b
Endrin Aldehyde	0.0002	0.0003		0.0007	ND	0.0009	ND	U	g	0.038	ND	0.045	ND	UJ	b
gamma-Chlordane	0.0001	0.0001		0.00018	ND	0.00026	ND	U	g	0.0092	ND	0.014	ND	UJ	b
alpha-Chlordane	0.0001	0.0001		0.00021	ND	0.00038	ND	U	g	0.011	ND	0.019	ND	UJ	b
Toxaphene	0.007	0.009		0.02	ND	0.03	ND	U	g	1.3	ND	1.6	ND	UJ	b
Arochlor 1016	0.009	0.009		0.03	ND	0.03	ND	U	g	1.5	ND	1.5	ND	UJ	b
Arochlor 1242	0.005	0.008		0.02	ND	0.03	ND	U	g	0.92	ND	1.3	ND	UJ	b
Arochlor 1248	0.004	0.005		0.01	ND	0.02	ND	U	g	0.60	ND	0.81	ND	UJ	b
Arochlor 1254	0.011	0.009		0.04	ND	0.03	ND	U	g	1.8	ND	1.6	ND	UJ	b
Arochlor 1260	0.009	0.010		0.03	0.07	0.02	0.07		g	1.5	ND	0.78	ND	UJ	b
Arochlor 1221	0.011	0.010		0.03	ND	0.03	ND	U	g	1.8	ND	1.6	ND	UJ	b
Arochlor 1232	0.005	0.005		0.02	ND	0.0	ND	U	g	0.78	ND	0.08	ND	UJ	b

Base: Kotzebue LRRS								Table 2.2								
Site: AOC9								Analytical Data Summary								
Extraction Method: EPA Method 3550								EPA Method 8081								
Analytical Method: EPA Method 8081																
Matrix: Soil																
Units: mg/kg																
				Environmental Samples												
			Field ID:		AOC-09-SB3-1.5			AOC-09-SB3-1.5								
			Batch ID:		H590			H590								
	DB-5	DB-608		DB-5	DB-5	DB-608		DB-608								
Parameters	MDL	MDL		PQL	Result	PQL		Result	Validity	Comments						
alpha BHC	0.0001	0.0001		0.00029	0.0021	0.00026		0.0021	J	n						
beta BHC	0.0001	0.0001		0.00043	ND	0.00040		ND	U	g						
delta BHC	0.0001	0.0001		0.00045	0.0020	0.00033		ND	U	h						
gamma BHC (Lindane)	0.0001	0.0001		0.00035	0.0015	0.00029		ND	U	h						
Heptachlor	0.0001	0.0001		0.0004	ND	0.0004		ND	U	g						
Aldrin	0.0001	0.0001		0.00028	ND	0.00036		ND	U	g						
Heptachlor Epoxide	0.0001	0.0001		0.00035	0.0014	0.00045		ND	U	h						
Endosulfan I	0.0001	0.0001		0.00051	ND	0.00051		ND	U	g						
Dieldrin	0.0001	0.0002		0.0005	0.0006	0.0007		0.0004	J	n						
4,4'-DDE	0.0001	0.0002		0.0005	0.0046	0.0007		0.0047		g						
Endrin	0.0001	0.0001		0.0004	0.0010	0.0005		0.0048	J	n						
Endosulfan II	0.0002	0.0002		0.0007	ND	0.0007		ND	U	g						
4,4'-DDD	0.0001	0.0001		0.0005	0.0023	0.0006		0.0041		g						
Endosulfan Sulfate	0.0002	0.0002		0.0011	ND	0.0011		ND	U	g						
4,4'-DDT	0.0002	0.0001		0.0010	0.018	0.0006		0.018		g						
Methoxychlor	0.0008	0.0011		0.0039	ND	0.0049		ND	U	g						
Endrin Aldehyde	0.0002	0.0003		0.0010	ND	0.0012		ND	U	g						
gamma-Chlordane	0.0001	0.0001		0.00024	ND	0.00036		ND	U	g						
alpha-Chlordane	0.0001	0.0001		0.00029	ND	0.00051		ND	U	g						
Toxaphene	0.007	0.009		0.03	ND	0.04		ND	U	g						
Arochlor 1016	0.009	0.009		0.04	ND	0.04		ND	U	g						
Arochlor 1242	0.005	0.008		0.02	ND	0.03		ND	U	g						
Arochlor 1248	0.004	0.005		0.02	ND	0.02		ND	U	g						
Arochlor 1254	0.011	0.009		0.05	ND	0.04		ND	U	g						
Arochlor 1260	0.009	0.010		0.04	ND	0.02		ND	U	g						
Arochlor 1221	0.011	0.010		0.05	ND	0.04		ND	U	g						
Arochlor 1232	0.005	0.005		0.02	ND	0.02		ND	U	g						

Base: Kotzebue LRRS						Table 2.3								
Site: AOC9						Analytical Data Summary								
Extraction Method: EPA Method 8260						EPA Method 8260								
Analytical Method: EPA Method 8260														
Matrix: Soil														
Units: mg/kg														
			Environmental Samples											
		Field ID:		AOC-09-SB1-1.5				AOC-09-SB2-2.0				AOC-09-SB3-1.5		
		Batch ID:		H590				H590				H590		
Parameters	MDL		PQL	Result	Validity	Comments	PQL	Result	Validity	Comments	PQL	Result	Validity	Comments
Chloromethane	0.0009		0.003	ND	U	g	0.38	ND	U	g	0.005	ND	U	g
Bromomethane	0.0008		0.003	ND	U	g	0.35	ND	U	g	0.004	ND	U	g
Vinyl Chloride	0.0010		0.003	ND	U	g	0.41	ND	U	g	0.005	ND	U	g
Chloroethane	0.0010		0.003	ND	U	g	0.44	ND	U	g	0.005	ND	U	g
Methylene Chloride	0.0009		0.003	0.004	B	a	0.37	0.22	B J	a	0.005	0.011	B	a
Acetone	0.0039		0.01	0.01	B	k	1.7	1.4	B J	a,k	0.02	0.03	B	k
Carbon Disulfide	0.0005		0.002	ND	U	g	0.23	ND	U	g	0.003	ND	U	g
1,1-Dichloroethene	0.0012		0.004	ND	U	g	0.50	ND	U	g	0.006	ND	U	g
1,1-Dichloroethane	0.0004		0.001	ND	U	g	0.16	ND	U	g	0.002	ND	U	g
trans-1,2-Dichloroethene	0.0009		0.003	ND	U	g	0.38	ND	U	g	0.005	ND	U	g
cis-1,2-Dichloroethylene	0.0011		0.004	ND	U	g	0.49	ND	U	g	0.006	ND	U	g
Chloroform	0.0005		0.002	ND	U	g	0.20	ND	U	g	0.002	ND	U	g
1,2-Dichloroethane	0.0005		0.002	ND	U	g	0.22	ND	U	g	0.003	ND	U	g
Methyl Ethyl Ketone (2-butanone)	0.0025		0.008	ND	U	g	1.1	0.45	J		0.013	0.005	J	
1,1,1-Trichloroethane	0.0004		0.001	ND	U	g	0.19	ND	U	g	0.002	ND	U	g
Carbon Tetrachloride	0.0010		0.003	ND	U	g	0.42	ND	U	g	0.005	ND	U	g
Vinyl Acetate	0.0016		0.005	ND	U	g	0.70	ND	U	g	0.009	ND	U	g
Bromodichloromethane	0.0006		0.002	ND	U	g	0.28	ND	U	g	0.003	ND	U	g
1,2-Dichloropropane	0.0008		0.003	ND	U	g	0.36	ND	U	g	0.004	ND	U	g
cis-1,3-Dichloropropene	0.0007		0.002	ND	U	g	0.30	ND	U	g	0.004	ND	U	g
Trichloroethylene (tce)	0.0005		0.002	ND	U	g	0.23	ND	U	g	0.003	ND	U	g
Dibromochloromethane	0.0003		0.001	ND	U	g	0.15	ND	U	g	0.002	ND	U	g
1,1,2-Trichloroethane	0.0007		0.002	ND	U	g	0.30	ND	U	g	0.004	ND	U	g
Benzene	0.0005		0.0016	ND	U	g	0.20	ND	U	g	0.0025	ND	U	g

Base: Kotzebue LRRS
Site: AOC9
Extraction Method: EPA Method 8260
Analytical Method: EPA Method 8260
Matrix: Soil
Units: mg/kg

Table 2.3
Analytical Data Summary
EPA Method 8260

			Environmental Samples											
		Field ID:		AOC-09-SB1-1.5				AOC-09-SB2-2.0				AOC-09-SB3-1.5		
		Batch ID:		H590				H590				H590		
Parameters	MDL		PQL	Result	Validity	Comments	PQL	Result	Validity	Comments	PQL	Result	Validity	Comments
trans-1,3-Dichloropropene	0.0005		0.002	ND	U	g	0.23	ND	U	g	0.003	ND	U	g
2-Chloroethyl Vinyl Ether	0.0006		0.002	ND	U	g	0.28	ND	U	g	0.003	ND	U	g
Bromoform	0.0013		0.004	ND	U	g	0.54	ND	U	g	0.007	ND	U	g
Methyl Isobutyl Ketone	0.0015		0.005	ND	U	g	0.65	ND	U	g	0.008	ND	U	g
2-Hexanone	0.0027		0.009	ND	U	g	1.2	ND	U	g	0.015	ND	U	g
Tetrachloroethylene (pce)	0.0009		0.003	ND	U	g	0.39	ND	U	g	0.005	ND	U	g
1,1,2,2-Tetrachloroethane	0.0009		0.0030	ND	U	g	0.39	ND	U	g	0.0049	ND	U	g
Toluene	0.0009		0.0030	ND	U	g	0.39	ND	U	g	0.0049	ND	U	g
Chlorobenzene	0.0007		0.002	ND	U	g	0.31	ND	U	g	0.004	ND	U	g
Ethylbenzene	0.0004		0.0014	ND	U	g	0.19	ND	U	g	0.0023	ND	U	g
Styrene	0.0006		0.002	ND	U	g	0.28	ND	U	g	0.003	ND	U	g
1,1,2-Trichloro-1,2,2-trifluoroethane	0.0007		0.002	ND	U	g	0.32	ND	U	g	0.004	ND	U	g
Xylenes, total	0.0020		0.007	ND	U	g	0.87	ND	U	g	0.011	ND	U	g
1,1,1,2-Tetrachloroethane	0.0010		0.003	ND	U	g	0.43	ND	U	g	0.005	ND	U	g
1,2,3-Trichloropropane	0.0023		0.007	ND	U	g	0.98	ND	U	g	0.012	ND	U	g
Bromochloromethane	0.0007		0.002	ND	U	g	0.29	ND	U	g	0.004	ND	U	g
1-Chlorohexane	0.0007		0.002	ND	U	g	0.28	ND	U	g	0.004	ND	U	g
Bromobenzene	0.0007		0.0024	ND	U	g	0.32	ND	U	g	0.0039	ND	U	g

Base: Kotzebue LRRS
Site: AOC9
Extraction Method: EPA Method 8260
Analytical Method: EPA Method 8260
Matrix: Soil
Units: mg/kg

Table 2.3
Analytical Data Summary
EPA Method 8260

Environmental Samples

Field ID:	AOC-09-SB3-1.5RE		
Batch ID:	H590		

Parameters	MDL	PQL	Result	Validity	Comments
Chloromethane	0.0009	0.005	ND	U	g
Bromomethane	0.0008	0.004	ND	U	g
Vinyl Chloride	0.0010	0.005	ND	U	g
Chloroethane	0.0010	0.005	ND	U	g
Methylene Chloride	0.0009	0.005	0.003	B J	a
Acetone	0.0039	0.02	ND	U	a,k
Carbon Disulfide	0.0005	0.003	ND	U	g
1,1-Dichloroethene	0.0012	0.006	ND	U	g
1,1-Dichloroethane	0.0004	0.002	ND	U	g
trans-1,2-Dichloroethene	0.0009	0.005	ND	U	g
cis-1,2-Dichloroethylene	0.0011	0.006	ND	U	g
Chloroform	0.0005	0.002	ND	U	g
1,2-Dichloroethane	0.0005	0.003	ND	U	g
Methyl Ethyl Ketone (2-butanone)	0.0025	0.013	ND	U	g
1,1,1-Trichloroethane	0.0004	0.002	ND	U	g
Carbon Tetrachloride	0.0010	0.005	ND	U	g
Vinyl Acetate	0.0016	0.009	ND	U	g
Bromodichloromethane	0.0006	0.003	ND	U	g
1,2-Dichloropropane	0.0008	0.004	ND	U	g
cis-1,3-Dichloropropene	0.0007	0.004	ND	U	g
Trichloroethylene (tce)	0.0005	0.003	ND	U	g
Dibromochloromethane	0.0003	0.002	ND	U	g
1,1,2-Trichloroethane	0.0007	0.004	ND	U	g
Benzene	0.0005	0.0025	ND	U	g

Base: Kotzebue LRRS						Table 2.3								
Site: AOC9						Analytical Data Summary								
Extraction Method: EPA Method 8260						EPA Method 8260								
Analytical Method: EPA Method 8260														
Matrix: Soil														
Units: mg/kg														
			Environmental Samples											
		Field ID:	AOC-09-SB3-1.5RE											
		Batch ID:		H590										
Parameters	MDL		PQL	Result	Validity	Comments								
trans-1,3-Dichloropropene	0.0005		0.003	ND	U	g								
2-Chloroethyl Vinyl Ether	0.0006		0.003	ND	U	g								
Bromoform	0.0013		0.007	ND	U	g								
Methyl Isobutyl Ketone	0.0015		0.008	ND	U	g								
2-Hexanone	0.0027		0.014	ND	U	g								
Tetrachloroethylene (pce)	0.0009		0.005	ND	U	g								
1,1,2,2-Tetrachloroethane	0.0009		0.0048	ND	U	g								
Toluene	0.0009		0.0048	ND	U	g								
Chlorobenzene	0.0007		0.004	ND	U	g								
Ethylbenzene	0.0004		0.0023	ND	U	g								
Styrene	0.0006		0.003	ND	U	g								
1,1,2-Trichloro-1,2,2-trifluoroethane	0.0007		0.004	ND	U	g								
Xylenes, total	0.0020		0.011	ND	U	g								
1,1,1,2-Tetrachloroethane	0.0010		0.005	ND	U	g								
1,2,3-Trichloropropane	0.0023		0.012	ND	U	g								
Bromochloromethane	0.0007		0.004	ND	U	g								
1-Chlorohexane	0.0007		0.003	ND	U	g								
Bromobenzene	0.0007		0.003	ND	U	g								

Base: Kotzebue LRRS
Site: AOC9
Extraction Method: EPA Method 3550
Analytical Method: EPA Method 8270
Matrix: Soil
Units: mg/kg

Table 16.2.1.4
Analytical Data Summary
EPA Method 8270

Environmental Samples

		Field ID:	AOC-09-SB1-1.5				AOC-09-SB2-2.0				AOC-09-SB3-1.5			
		Batch ID:	H590				H590				H590			
Parameters	MDL	PQL	Result	Validity	Comments	PQL	Result	Validity	Comments	PQL	Result	Validity	Comments
Phenol	0.05	0.2	ND	U	g	0.2	ND	U	g	0.2	ND	U	g
bis(2-Chloroethyl) Ether	0.04	0.1	ND	U	g	0.1	ND	U	g	0.2	ND	U	g
2-Chlorophenol	0.07	0.2	ND	U	g	0.2	ND	U	g	0.3	ND	U	g
1,3-Dichlorobenzene	0.04	0.1	ND	U	k	0.1	ND	U	k	0.2	ND	U	k
1,4-Dichlorobenzene	0.03	0.1	ND	U	g	0.1	ND	U	g	0.1	ND	U	g
Benzyl Alcohol	0.05	0.2	ND	U	g	0.2	ND	U	g	0.2	ND	U	g
1,2-Dichlorobenzene	0.04	0.1	ND	U	g	0.1	ND	U	g	0.2	ND	U	g
2-Methylphenol	0.10	0.3	ND	U	g	0.3	ND	U	g	0.4	ND	U	g
2,2'-Oxybis (1-Chloropropane)	0.03	0.1	ND	U	g	0.1	ND	U	g	0.1	ND	U	g
4-Methylphenol	0.08	0.3	ND	U	g	0.3	ND	U	g	0.4	ND	U	g
N-Nitrosodi-n-propylamine	0.03	0.1	ND	U	g	0.1	ND	U	g	0.1	ND	U	g
Hexachloroethane	0.04	0.1	ND	U	g	0.1	ND	U	g	0.2	ND	U	g
Nitrobenzene	0.02	0.1	ND	U	g	0.7	ND	U	g	0.1	ND	U	g
Isophorone	0.03	0.1	ND	U	g	1.3	ND	U	g	0.1	ND	U	g
2-Nitrophenol	0.03	0.1	ND	U	g	0.6	ND	U	g	0.2	ND	U	g
2,4-Dimethylphenol	0.17	0.3	ND	U	g	0.4	ND	U	g	0.4	ND	U	g
Benzoic Acid	0.06	0.19	ND	U	g	1.0	ND	U	g	0.26	ND	U	g
bis(2-Chloroethoxy) Methane	0.04	0.1	ND	U	g	0.1	ND	U	g	0.2	ND	U	g
2,4-Dichlorophenol	0.04	0.1	ND	U	g	0.2	ND	U	g	0.2	ND	U	g
1,2,4-Trichlorobenzene	0.03	0.1	ND	U	g	0.1	ND	U	g	0.2	ND	U	g
Naphthalene	0.04	0.1	ND	U	g	0.1	ND	U	g	0.2	ND	U	g
4-Chloroaniline	0.10	0.3	ND	U	g	0.3	ND	U	g	0.5	ND	U	g
Hexachlorobutadiene	0.03	0.1	ND	U	g	0.1	ND	U	g	0.2	ND	U	g
4-Chloro-3-Methylphenol	0.06	0.2	ND	U	g	0.2	ND	U	g	0.3	ND	U	g
2-Methylnaphthalene	0.03	0.1	ND	U	g	0.1	ND	U	g	0.2	ND	U	g
Hexachlorocyclopentadiene	0.03	0.1	ND	U	g	0.1	ND	U	g	0.1	ND	U	g
2,4,6-Trichlorophenol	0.04	0.1	ND	U	g	0.1	ND	U	g	0.2	ND	U	g
2,4,5-Trichlorophenol	0.03	0.09	ND	U	g	0.09	ND	U	g	0.12	ND	U	g
2-Chloronaphthalene	0.03	0.1	ND	U	g	0.1	ND	U	g	0.2	ND	U	g
2-Nitroaniline	0.02	0.06	ND	U	g	0.06	ND	U	g	0.09	ND	U	g
Dimethyl Phthalate	0.04	0.1	0.1	J		0.1	ND	U	g	0.2	ND	U	g
Acenaphthylene	0.04	0.1	ND	U	g	0.1	ND	U	g	0.2	ND	U	g
3-Nitroaniline	0.11	0.38	ND	U	g	0.38	ND	U	g	0.51	ND	U	g
Acenaphthene	0.03	0.1	ND	U	g	0.1	ND	U	g	0.1	ND	U	g
2,4-Dinitrophenol	0.09	0.30	ND	U	g	0.30	ND	U	g	0.41	ND	U	g
4-Nitrophenol	0.07	0.70	ND	U	g	0.91	ND	U	g	0.30	ND	U	g
Dibenzofuran	0.03	0.1	ND	U	g	0.1	ND	U	g	0.1	ND	U	g
2,6-Dinitrotoluene	0.04	0.1	ND	U	g	0.1	ND	U	g	0.2	ND	U	g

Base: Kotzebue LRRS						Table 16.2.1.4								
Site: AOC9						Analytical Data Summary								
Extraction Method: EPA Method 3550						EPA Method 8270								
Analytical Method: EPA Method 8270														
Matrix: Soil														
Units: mg/kg														
			Environmental Samples											
		Field ID:		AOC-09-SB1-1.5				AOC-09-SB2-2.0				AOC-09-SB3-1.5		
		Batch ID:		H590				H590				H590		
Parameters	MDL		PQL	Result	Validity	Comments	PQL	Result	Validity	Comments	PQL	Result	Validity	Comments
2,4-Dinitrotoluene	0.02		0.1	ND	U	g	0.1	ND	U	g	0.1	ND	U	g
Diethyl Phthalate	0.04		0.1	ND	U	g	0.1	ND	U	g	0.2	ND	U	g
4-Chlorophenyl Phenyl Ether	0.02		0.1	ND	U	g	0.1	ND	U	g	0.1	ND	U	g
Fluorene	0.03		0.1	ND	U	g	0.1	ND	U	g	0.1	ND	U	g
4-Nitroaniline	0.13		0.45	ND	U	g	0.45	ND	U	g	0.61	ND	U	g
4,6-Dinitro-2-Methylphenol	0.09		0.30	ND	U	g	0.30	ND	U	g	0.41	ND	U	g
N-Nitrosodiphenylamine	0.08		0.3	ND	U	g	0.3	ND	U	g	0.4	ND	U	g
4-Bromophenyl Phenyl Ether	0.02		0.1	ND	U	g	0.1	ND	U	g	0.1	ND	U	g
Hexachlorobenzene	0.03		0.1	ND	U	g	0.1	ND	U	g	0.1	ND	U	g
Pentachlorophenol	0.03		0.11	ND	U	g	0.11	ND	U	g	0.15	ND	U	g
Phenanthrene	0.03		0.1	ND	U	g	0.1	ND	U	g	0.2	ND	U	g
Anthracene	0.04		0.1	ND	U	g	0.1	ND	U	g	0.2	ND	U	g
di-n-butyl Phthalate	0.06		0.2	ND	U	g	0.2	ND	U	g	0.3	ND	U	g
Fluroanthene	0.03		0.1	ND	U	g	0.1	ND	U	g	0.2	ND	U	g
Pyrene	0.03		0.1	ND	U	g	0.1	ND	U	g	0.1	ND	U	g
Butylbenzylphthalate	0.02		0.1	ND	U	g	0.1	ND	U	g	0.1	ND	U	g
3,3'-Dichlorobenzidine	0.06		0.2	ND	U	g	0.2	ND	U	g	0.3	ND	U	g
Benzo(a)anthracene	0.04		0.1	ND	U	g	0.1	ND	U	g	0.2	ND	U	g
bis(2-Ethylhexyl) Phthalate	0.04		0.1	0.6		g	0.1	0.3		g	0.2	0.3		g
Chrysene	0.05		0.2	ND	U	g	0.2	ND	U	g	0.2	ND	U	g
di-n-Octylphthalate	0.02		0.1	ND	U	g	0.1	ND	U	g	0.1	ND	U	g
Benzo(b)fluoranthene	0.04		0.1	ND	U	g	0.1	ND	U	g	0.2	ND	U	g
Benzo(k)fluoranthene	0.07		0.3	ND	U	g	0.3	ND	U	g	0.3	ND	U	g
Benzo(a)pyrene	0.04		0.1	ND	U	g	0.1	ND	U	g	0.2	ND	U	g
Indeno(1,2,3-c,d)pyrene	0.03		0.1	ND	U	g	0.1	ND	U	g	0.1	ND	U	g
Dibenzo(a,h)anthracene	0.02		0.1	ND	U	g	0.1	ND	U	g	0.1	ND	U	g
Benzo(g,h,i)perylene	0.03		0.1	ND	U	g	0.1	ND	U	g	0.1	ND	U	g

ANALYTICAL DATA SUMMARY
SITE ST05-BEACH TANKS

Base: Kotzebue LRRS						Table 2.1.1								
Site: ST5						Analytical Data Summary								
Extraction Method: EPA Method 3550						Method AK102								
Analytical Method: Method AK102														
Matrix: Soil														
Units: mg/kg														
			Environmental Samples											
		Field ID:		ST05-SB1-8.5				ST05-SB2-8.0				ST05-SB2-8.0DL		
		Batch ID:		H607				H607				H607		
Parameters	MDL		PQL	Result	Validity	Comments	PQL	Result	Validity	Comments	PQL	Result	Validity	Comments
												Dilution 100		
Diesel Hydrocarbons	0.9		3.3	4.0		g	3.2	S*	NA	NA	320	10000		g
* No value reported due to saturation of the detector.														

Base: Kotzebue LRRS						Table 2.1.1							
Site: ST5						Analytical Data Summary							
Extraction Method: EPA Method 3550						Method AK102							
Analytical Method: Method AK102													
Matrix: Soil													
Units: mg/kg													
			Environmental Samples										
		Field ID:		ST05-SB3-8.0				ST05-SB3-8.0DL					
		Batch ID:		H607				H607					
Parameters	MDL		PQL	Result	Validity	Comments	PQL	Result	Validity	Comments			
								Dilution 100					
Diesel Hydrocarbons	0.9		3.3	S*	NA	NA	330	7100		g			
* No value reported due to saturation of the detector.													

Base: Kotzebue LRRS						Table 2.1.1								
Site: ST5						Analytical Data Summary								
Extraction Method: EPA Method 3550						Method AK102								
Analytical Method: Method AK102														
Matrix: Soil														
Units: mg/kg														
			Environmental Samples											
		Field ID:		ST05-SB4-8.0				ST05-SB5-8.0				ST05-SB6-4.0		
		Batch ID:		H615				H615				H615		
Parameters	MDL		PQL	Result	Validity	Comments	PQL	Result	Validity	Comments	PQL	Result	Validity	Comments
Diesel Hydrocarbons	0.9		3.2	1.2	J		3.2	280	J	n	2.9	1200 E**	J	n
** Analyte detected above linear calibration range.														

Base: Kotzebue LRRS						Table 2.1.1								
Site: ST5						Analytical Data Summary								
Extraction Method: EPA Method 3550						Method AK102								
Analytical Method: Method AK102														
Matrix: Soil														
Units: mg/kg														
			Environmental Samples											
		Field ID:		ST05-SB6-4.0DL				ST05-SB7-4.0				ST05-SB7-4.0DL		
		Batch ID:		H615				H615				H615		
Parameters	MDL		PQL	Result	Validity	Comments	PQL	Result	Validity	Comments	PQL	Result	Validity	Comments
				Dilution 10								Dilution 50		
Diesel Hydrocarbons	0.9		29	1200	J	n	3.0	4000 E**	J	n	150	4300	J	n
** Analyte detected above linear calibration range.														

Base: Kotzebue LRRS						Table 2.1.1								
Site: ST5						Analytical Data Summary								
Extraction Method: EPA Method 3550						Method AK102								
Analytical Method: Method AK102														
Matrix: Soil														
Units: mg/kg														
			Environmental Samples											
		Field ID:		ST05-SB8-4.0				ST05-SB8-4.0DL				ST05-SB9-4.0		
		Batch ID:		H615				H615				H615		
Parameters	MDL		PQL	Result	Validity	Comments	PQL	Result	Validity	Comments	PQL	Result	Validity	Comments
								Dilution 100						
Diesel Hydrocarbons	0.9		3.1	S*	NA	NA	310	9000	J	n	3.2	S*	NA	NA
* No value reported due to saturation of the detector.														

Base: Kotzebue LRRS						Table 2.1.1							
Site: ST5						Analytical Data Summary							
Extraction Method: EPA Method 3550						Method AK102							
Analytical Method: Method AK102													
Matrix: Soil													
Units: mg/kg													
			Environmental Samples										
		Field ID:		ST05-SB9-4.0DL									
		Batch ID:		H615									
Parameters	MDL		PQL	Result	Validity	Comments							
				Dilution 100									
Diesel Hydrocarbons	0.9		320	6000	J	n							

Base: Kotzebue LRRS						Table 2.1.1								
Site: ST5						Analytical Data Summary								
Extraction Method: EPA Method 3550						Method AK102								
Analytical Method: Method AK102														
Matrix: Soil														
Units: mg/kg														
			Environmental Samples											
		Field ID:	ST05-SB10-7.0-8.5				ST05-SB10-7.0-8.5DL				ST05-SB11-6.5-7.0			
		Batch ID:		H700				H700				H700		
Parameters	MDL		PQL	Result	Validity	Comments	PQL	Result	Validity	Comments	PQL	Result	Validity	Comments
								Dilution 10						
Diesel Hydrocarbons	0.9		6.5	S*	NA	NA	65	7700		g	7.9	ND	U	g
* No value reported due to saturation of the detector.														

Base: Kotzebue LRRS						Table 2.1.1								
Site: ST5						Analytical Data Summary								
Extraction Method: EPA Method 3550						Method AK102								
Analytical Method: Method AK102														
Matrix: Soil														
Units: mg/kg														
			Environmental Samples											
		Field ID:	ST05-SB12-5.5-7.0											
		Batch ID:		H700										
Parameters	MDL		PQL	Result	Validity	Comments								
Diesel Hydrocarbons	0.9		7.7	ND	U	g								

Table 2.1.1
Analytical Data Summary
Method AK102

Base: Kotzebue LRRS
Site: ST5
Extraction Method: EPA Method 3550
Analytical Method: Method AK102
Matrix: Soil
Units: mg/kg

			Environmental Samples											
		Field ID:		ST05-SB13-12.8				ST05-SB13-7.0				ST05-SB13-7.0DL		
		Batch ID:		H718				H718				H718		
Parameters	MDL		PQL	Result	Validity	Comments	PQL	Result	Validity	Comments	PQL	Result Dilution 50	Validity	Comments
Diesel Hydrocarbons	0.9		8.3	5.8	J		7.7	5400 E**	J	n	390	7600	J	n

** Analyte detected above linear calibration range.

Base: Kotzebue LRRS						Table 2.1.1								
Site: ST5						Analytical Data Summary								
Extraction Method: EPA Method 3550						Method AK102								
Analytical Method: Method AK102														
Matrix: Soil														
Units: mg/kg														
			Environmental Samples											
		Field ID:		ST05-SB14-11.0				ST05-SB14-11.0DL				ST05-SB14-13.0		
		Batch ID:		H718				H718				H718		
Parameters	MDL		PQL	Result	Validity	Comments	PQL	Result	Validity	Comments	PQL	Result	Validity	Comments
								Dilution 50						
Diesel Hydrocarbons	0.9		7.9	S*	NA	NA	390	8700	J	n	8.6	84		g
* No value reported due to saturation of the detector.														

Base: Kotzebue LRRS						Table 2.1.1								
Site: ST5						Analytical Data Summary								
Extraction Method: EPA Method 3550						Method AK102								
Analytical Method: Method AK102														
Matrix: Soil														
Units: mg/kg														
			Environmental Samples											
		Field ID:		ST05-SB14-7.0				ST05-SB14-7.0DL				ST05-SB15-5.5		
		Batch ID:		H718				H718				H718		
Parameters	MDL		PQL	Result	Validity	Comments	PQL	Result	Validity	Comments	PQL	Result	Validity	Comments
								Dilution 50						
Diesel Hydrocarbons	0.9		7.7	4900 E**	J	n	380	6100	J	n	7.8	67		g
** Analyte detected above linear calibration range.														

Base: Kotzebue LRRS						Table 2.1.1								
Site: ST5						Analytical Data Summary								
Extraction Method: EPA Method 3550						Method AK102								
Analytical Method: Method AK102														
Matrix: Soil														
Units: mg/kg														
			Environmental Samples											
		Field ID:	ST05-SB15-5.5 DUP					ST05-SB16-5.5					ST05-SB16-5.5DL	
		Batch ID:		H718				H718					H718	
Parameters	MDL		PQL	Result	Validity	Comments	PQL	Result	Validity	Comments	PQL	Result	Validity	Comments
												Dilution 100		
Diesel Hydrocarbons	0.9		7.8	91		g	7.6	S*	NA	NA	760	11000		g
* No value reported due to saturation of the detector.														

Base: Kotzebue LRRS						Table 2.1.1								
Site: ST5						Analytical Data Summary								
Extraction Method: EPA Method 3550						Method AK102								
Analytical Method: Method AK102														
Matrix: Soil														
Units: mg/kg														
			Environmental Samples											
		Field ID:		ST05-SB18-8.5				ST05-SB19-6.0				ST05-SB20-6.7		
		Batch ID:		H746				H746				H746		
Parameters	MDL		PQL	Result	Validity	Comments	PQL	Result	Validity	Comments	PQL	Result	Validity	Comments
Diesel Hydrocarbons	0.9		7.8	4.3	J		7.5	30		g	7.7	880		g

Base: Kotzebue LRRS						Table 2.1.1							
Site: ST5						Analytical Data Summary							
Extraction Method: EPA Method 3550						Method AK102							
Analytical Method: Method AK102													
Matrix: Soil													
Units: mg/kg													
			Environmental Samples										
		Field ID:		ST05-SB21-8.5				ST05-SB21-8.5DL					
		Batch ID:		H746				H746					
Parameters	MDL		PQL	Result	Validity	Comments	PQL	Result	Validity	Comments			
								Dilution 10					
Diesel Hydrocarbons	0.9		8.1	S*	NA	NA	81	5800	J	n			
* No value reported due to saturation of the detector.													

Base: Kotzebue LRRS						Table 2.1.1								
Site: ST5						Analytical Data Summary								
Extraction Method: EPA Method 3550						Method AK102								
Analytical Method: Method AK102														
Matrix: Soil														
Units: mg/kg														
			Environmental Samples											
		Field ID:		ST05-SB22-8.5				ST05-SB23-8.5				ST05-SB23-8.5DL		
		Batch ID:		H753				H753				H753		
Parameters	MDL		PQL	Result	Validity	Comments	PQL	Result	Validity	Comments	PQL	Result	Validity	Comments
												Dilution 50		
Diesel Hydrocarbons	0.9		7.5	3.9	J		7.5	S*	NA	NA	380	6200		g
* No value reported due to saturation of the detector.														

Base: Kotzebue LRRS						Table 2.1.1							
Site: ST5						Analytical Data Summary							
Extraction Method: EPA Method 3550						Method AK102							
Analytical Method: Method AK102													
Matrix: Soil													
Units: mg/kg													
			Environmental Samples										
		Field ID:		ST05-SB24-8.0				ST05-SB24-8.0DL					
		Batch ID:		H753				H753					
Parameters	MDL		PQL	Result	Validity	Comments	PQL	Result	Validity	Comments			
								Dilution 100					
Diesel Hydrocarbons	0.9		7.3	S*	NA	NA	730	18000		g			
* No value reported due to saturation of the detector.													

Base: Kotzebue LRRS
Site: ST5
Extraction Method: EPA Method 3550
Analytical Method: EPA Method 8081
Matrix: Soil
Units: mg/kg

Table 2.1.2
Analytical Data Summary
EPA Method 8081

				Environmental Samples											
			Field ID:		ST05-SS1		ST05-SS1				ST05-SS2		ST05-SS2		
			Batch ID:		H753		H753				H753		H753		
	DB-5	DB-608		DB-5	DB-5	DB-608	DB-608			DB-5	DB-5	DB-608	DB-608		
Parameters	MDL	MDL		PQL	Result	PQL	Result	Validity	Comments	PQL	Result	PQL	Result	Validity	Comments
alpha BHC	0.0001	0.0001		0.00032	ND	0.00029	ND	U	g	0.00021	ND	0.00018	ND	U	g
beta BHC	0.0001	0.0001		0.00049	0.0020	0.00045	ND	U	h	0.00031	ND	0.00029	ND	U	g
delta BHC	0.0001	0.0001		0.00050	ND	0.00037	ND	U	g	0.00032	0.0018	0.00024	0.0020	J	n
gamma BHC (Lindane)	0.0001	0.0001		0.00040	0.0022	0.00033	ND	U	h	0.00025	0.0013	0.00021	ND	U	h
Heptachlor	0.0001	0.0001		0.0005	ND	0.0004	ND	U	g	0.0003	ND	0.0003	ND	U	g
Aldrin	0.0001	0.0001		0.00031	ND	0.00041	ND	U	g	0.00020	ND	0.00026	ND	U	g
Heptachlor Epoxide	0.0001	0.0001		0.00040	ND	0.00050	ND	U	g	0.00025	ND	0.00032	ND	U	g
Endosulfan I	0.0001	0.0001		0.00058	ND	0.00058	ND	U	g	0.00037	0.010	0.00037	ND	U	h
Dieldrin	0.0001	0.0002		0.0006	ND	0.0008	ND	U	g	0.0004	ND	0.0005	ND	U	g
4,4'-DDE	0.0001	0.0002		0.0005	0.0052	0.0008	0.0050		g	0.0003	0.046	0.0005	0.044		g
Endrin	0.0002	0.0001		0.0005	ND	0.0005	ND	U	a,k	0.0003	0.0069	0.0003	0.0040	B J	a,k,n
Endosulfan II	0.0002	0.0002		0.0008	0.0018	0.0008	ND	U	a,h	0.0005	ND	0.0005	ND	U	a
4,4'-DDD	0.0001	0.0001		0.0006	0.0026	0.0007	0.0037		g	0.0004	0.35	0.0005	0.94		g
Endosulfan Sulfate	0.0002	0.0002		0.0013	ND	0.0013	ND	U	g	0.0008	ND	0.0008	ND	U	g
4,4'-DDT	0.0002	0.0001		0.0012	0.0071	0.0007	0.0075	B	k	0.0007	0.85 E*	0.0004	1.1 E*	J	k,n
Methoxychlor	0.0008	0.0011		0.0044	ND	0.0055	ND	U	g	0.0028	ND	0.0035	ND	U	g
Endrin Aldehyde	0.0002	0.0003		0.0011	ND	0.0013	ND	U	g	0.0007	ND	0.0009	ND	U	g
gamma-Chlordane	0.0001	0.0001		0.00027	0.00021	0.00041	ND	U	h	0.00018	0.00095	0.00026	ND	U	h
alpha-Chlordane	0.0001	0.0001		0.00032	ND	0.00058	ND	U	g	0.00021	ND	0.00037	ND	U	g
Toxaphene	0.007	0.009		0.04	ND	0.05	ND	U	g	0.02	ND	0.03	ND	U	g
Arochlor 1016	0.009	0.009		0.04	ND	0.04	ND	U	g	0.03	ND	0.03	ND	U	g
Arochlor 1242	0.005	0.008		0.03	ND	0.04	ND	U	g	0.02	ND	0.02	ND	U	g
Arochlor 1248	0.004	0.005		0.02	ND	0.02	ND	U	g	0.01	ND	0.02	ND	U	g
Arochlor 1254	0.011	0.009		0.05	ND	0.05	ND	U	g	0.03	ND	0.03	ND	U	g
Arochlor 1260	0.009	0.010		0.04	ND	0.02	ND	U	g	0.03	ND	0.01	ND	U	g
Arochlor 1221	0.011	0.010		0.05	ND	0.05	ND	U	g	0.03	ND	0.03	ND	U	g
Arochlor 1232	0.005	0.005		0.02	ND	0.00	ND	U	g	0.01	ND	0.00	ND	U	g

* Analyte detected above linear calibration range.

Base: Kotzebue LRRS					Table 2.1.2										
Site: ST5					Analytical Data Summary										
Extraction Method: EPA Method 3550					EPA Method 8081										
Analytical Method: EPA Method 8081															
Matrix: Soil															
Units: mg/kg															
				Environmental Samples											
			Field ID:		ST05-SS2DL		ST05-SS2DL				ST05-SS3		ST05-SS3		
			Batch ID:		H753		H753				H753		H753		
	DB-5	DB-608		DB-5	DB-5	DB-608	DB-608			DB-5	DB-5	DB-608	DB-608		
Parameters	MDL	MDL		PQL	Result	PQL	Result	Validity	Comments	PQL	Result	PQL	Result	Validity	Comments
					Dilution 50		Dilution 50								
alpha BHC	0.0001	0.0001		0.010	ND	0.0092	ND	U	g	0.00022	ND	0.00020	ND	U	g
beta BHC	0.0001	0.0001		0.016	ND	0.015	ND	U	g	0.00033	ND	0.00031	ND	U	g
delta BHC	0.0001	0.0001		0.016	ND	0.012	ND	U	g	0.00034	ND	0.00026	ND	U	g
gamma BHC (Lindane)	0.0001	0.0001		0.013	ND	0.010	ND	U	g	0.00027	ND	0.00022	ND	U	g
Heptachlor	0.0001	0.0001		0.014	ND	0.014	ND	U	g	0.0003	ND	0.0003	ND	U	g
Aldrin	0.0001	0.0001		0.010	ND	0.013	ND	U	g	0.00022	ND	0.00028	ND	U	g
Heptachlor Epoxide	0.0001	0.0001		0.013	ND	0.016	ND	U	g	0.00027	0.00076	0.00034	ND	U	h
Endosulfan I	0.0001	0.0001		0.018	ND	0.018	ND	U	g	0.00040	ND	0.00040	ND	U	g
Dieldrin	0.0001	0.0002		0.020	ND	0.024	ND	U	g	0.0004	ND	0.0005	ND	U	g
4,4'-DDE	0.0001	0.0002		0.016	0.15	0.024	0.13		g	0.0003	0.019	0.0005	0.018		g
Endrin	0.0002	0.0001		0.016	0.020	0.017	ND	U	a,h,k	0.0003	0.0008	0.0004	ND	U	a,h,k
Endosulfan II	0.0002	0.0002		0.026	ND	0.026	ND	U	a,k	0.0006	0.0009	0.0006	ND	U	a,h,k
4,4'-DDD	0.0001	0.0001		0.020	0.35	0.023	0.88		g	0.0004	0.014	0.0005	0.014		g
Endosulfan Sulfate	0.0002	0.0002		0.040	ND	0.040	ND	U	g	0.0009	ND	0.0009	ND	U	g
4,4'-DDT	0.0002	0.0001		0.037	2.8	0.021	2.6		k	0.0008	0.11 E*	0.0005	0.10 E*	J	k,n
Methoxychlor	0.0008	0.0011		0.14	ND	0.18	ND	U	g	0.0030	ND	0.0038	ND	U	g
Endrin Aldehyde	0.0002	0.0003		0.036	ND	0.043	ND	U	g	0.0008	ND	0.0009	ND	U	g
gamma-Chlordane	0.0001	0.0001		0.0088	ND	0.013	ND	U	g	0.00019	0.00054	0.00028	ND	U	h
alpha-Chlordane	0.0001	0.0001		0.010	ND	0.018	ND	U	g	0.00022	ND	0.00040	ND	U	g
Toxaphene	0.007	0.009		1.2	ND	1.5	ND	U	g	0.03	ND	0.03	ND	U	g
Arochlor 1016	0.009	0.009		1.4	ND	1.4	ND	U	g	0.03	ND	0.03	ND	U	g
Arochlor 1242	0.005	0.008		0.88	ND	1.2	ND	U	g	0.02	ND	0.03	ND	U	g
Arochlor 1248	0.004	0.005		0.57	ND	0.77	ND	U	g	0.01	ND	0.02	ND	U	g
Arochlor 1254	0.011	0.009		1.7	ND	1.5	ND	U	g	0.04	ND	0.03	ND	U	g
Arochlor 1260	0.009	0.010		1.4	ND	0.74	ND	U	g	0.03	ND	0.02	ND	U	g
Arochlor 1221	0.011	0.010		1.7	ND	1.5	ND	U	g	0.04	ND	0.03	ND	U	g
Arochlor 1232	0.005	0.005		0.74	ND	0.07	ND	U	g	0.02	ND	0.00	ND	U	g
* Analyte detected above linear calibration range.															

Base: Kotzebue LRRS							Table 2.1.2								
Site: ST5							Analytical Data Summary								
Extraction Method: EPA Method 3550							EPA Method 8081								
Analytical Method: EPA Method 8081															
Matrix: Soil															
Units: mg/kg															
				Environmental Samples											
			Field ID:		ST05-SS3DL		ST05-SS3DL								
			Batch ID:		H753		H753								
	DB-5	DB-608		DB-5	DB-5	DB-608	DB-608								
Parameters	MDL	MDL		PQL	Result	PQL	Result	Validity	Comments						
					Dilution 10		Dilution 10								
alpha BHC	0.0001	0.0001		0.0022	ND	0.0020	ND	U	g						
beta BHC	0.0001	0.0001		0.0033	ND	0.0031	ND	U	g						
delta BHC	0.0001	0.0001		0.0034	ND	0.0026	ND	U	g						
gamma BHC (Lindane)	0.0001	0.0001		0.0027	ND	0.0023	ND	U	g						
Heptachlor	0.0001	0.0001		0.0031	ND	0.0031	ND	U	g						
Aldrin	0.0001	0.0001		0.0022	ND	0.0028	ND	U	g						
Heptachlor Epoxide	0.0001	0.0001		0.0027	0.0011	0.0034	ND	U	h						
Endosulfan I	0.0001	0.0001		0.0040	ND	0.0040	ND	U	g						
Dieldrin	0.0001	0.0002		0.0042	ND	0.0052	ND	U	g						
4,4'-DDE	0.0001	0.0002		0.0035	0.040	0.0052	0.036		g						
Endrin	0.0002	0.0001		0.0035	0.0047	0.0036	ND	U	a,h,k						
Endosulfan II	0.0002	0.0002		0.0057	ND	0.0055	ND	U	a						
4,4'-DDD	0.0001	0.0001		0.0042	0.028	0.0050	0.046		g						
Endosulfan Sulfate	0.0002	0.0002		0.0086	ND	0.0086	ND	U	g						
4,4'-DDT	0.0002	0.0001		0.0080	0.099	0.0046	0.092	B	k						
Methoxychlor	0.0008	0.0011		0.030	ND	0.038	ND	U	g						
Endrin Aldehyde	0.0002	0.0003		0.0078	ND	0.0092	ND	U	g						
gamma-Chlordane	0.0001	0.0001		0.0019	ND	0.0028	ND	U	g						
alpha-Chlordane	0.0001	0.0001		0.0022	ND	0.0040	ND	U	g						
Toxaphene	0.007	0.009		0.26	ND	0.32	ND	U	g						
Arochlor 1016	0.009	0.009		0.31	ND	0.30	ND	U	g						
Arochlor 1242	0.005	0.008		0.19	ND	0.27	ND	U	g						
Arochlor 1248	0.004	0.005		0.12	ND	0.17	ND	U	g						
Arochlor 1254	0.011	0.009		0.37	ND	0.32	ND	U	g						
Arochlor 1260	0.009	0.010		0.30	ND	0.16	ND	U	g						
Arochlor 1221	0.011	0.010		0.37	ND	0.33	ND	U	g						
Arochlor 1232	0.005	0.005		0.16	ND	0.02	ND	U	g						

Base: Kotzebue LRRS
Site: ST05
Extraction Method: EPA Method 5030
Analytical Method: EPA Method 8260
Matrix: Soil
Units: mg/kg

Table 7.2.1.3
Analytical Data Summary
EPA Method 8260

			Environmental Samples								
		Field ID:		ST05-SB1-8.0				ST05-SB3-8.0			
		Batch ID:		H607				H607			
Parameters	MDL		PQL	Result	Validity	Comments	PQL	Result		Comments	
Chloromethane	0.0009		0.003	ND	U	g	0.39	ND	U	g	
Bromomethane	0.0008		0.003	ND	U	g	0.36	ND	U	g	
Vinyl Chloride	0.0010		0.003	ND	U	g	0.42	ND	U	g	
Chloroethane	0.0010		0.003	ND	U	g	0.45	ND	U	g	
Methylene Chloride	0.0009		0.003	0.002	B J	a,k	0.38	0.35	J	a,k	
Acetone	0.0039		0.01	ND	U	g	1.7	ND	U	g	
Carbon Disulfide	0.0005		0.002	ND	U	g	0.24	ND	U	g	
1,1-Dichloroethene	0.0012		0.004	ND	U	g	0.51	ND	U	g	
1,1-Dichloroethane	0.0004		0.001	ND	U	g	0.16	ND	U	g	
trans-1,2-Dichloroethene	0.0009		0.003	ND	U	g	0.39	ND	U	g	
cis-1,2-Dichloroethene	0.0011		0.004	ND	U	g	0.51	ND	U	g	
Chloroform	0.0005		0.002	ND	U	g	0.20	ND	U	g	
1,2-Dichloroethane	0.0004		0.002	ND	U	g	0.22	ND	U	g	
Methyl Ethyl Ketone (2-butanone)	0.0025		0.008	ND	U	g	1.1	ND	U	g	
1,1,1-Trichloroethane	0.0004		0.001	ND	U	g	0.19	ND	U	g	
Carbon Tetrachloride	0.0010		0.003	ND	U	g	0.43	ND	U	g	
Vinyl Acetate	0.0016		0.005	ND	U	g	0.71	ND	U	g	
Bromodichloromethane	0.0006		0.002	ND	U	g	0.29	ND	U	g	
1,2-Dichloropropane	0.0008		0.003	ND	U	g	0.37	ND	U	g	
cis-1,3-Dichloropropene	0.0007		0.002	ND	U	g	0.31	ND	U	g	
Trichloroethene (tce)	0.0005		0.002	ND	U	g	0.24	ND	U	g	
Dibromochloromethane	0.0003		0.001	ND	U	g	0.15	ND	U	g	
1,1,2-Trichloroethane	0.0007		0.002	ND	U	g	0.31	ND	U	g	
Benzene	0.0005		0.0016	ND	U	g	0.21	ND	U	g	

Base: Kotzebue LRRS						Table 7.2.1.3							
Site: ST05						Analytical Data Summary							
Extraction Method: EPA Method 5030						EPA Method 8260							
Analytical Method: EPA Method 8260													
Matrix: Soil													
Units: mg/kg													
			Environmental Samples										
		Field ID:		ST05-SB1-8.0				ST05-SB3-8.0					
		Batch ID:		H607				H607					
Parameters	MDL		PQL	Result	Validity	Comments	PQL	Result	Validity	Comments			
trans-1,3-Dichloropropene	0.0005		0.002	ND	U	g	0.24	ND	U	g			
2-Chloroethyl Vinyl Ether	0.0006		0.002	ND	U	g	0.28	ND	U	g			
Bromoform	0.0013		0.004	ND	U	g	0.56	ND	U	g			
Methyl Isobutyl Ketone	0.0025		0.005	ND	U	g	0.67	ND	U	g			
2-Hexanone	0.0027		0.009	ND	U	g	1.2	ND	U	g			
Tetrachloroethene (pce)	0.0009		0.003	ND	U	g	0.40	ND	U	g			
1,1,2,2-Tetrachloroethane	0.0009		0.0030	ND	U	g	0.40	ND	U	g			
Toluene	0.0009		0.0030	ND	U	g	0.40	ND	U	g			
Chlorobenzene	0.0007		0.002	ND	U	g	0.32	0.27	J				
Ethylbenzene	0.0004		0.0014	ND	U	g	0.19	ND	U	g			
Styrene	0.0006		0.002	ND	U	g	0.28	ND	U	g			
1,1,2-Trichloro-1,2,2-trifluoroethane	0.0007		0.002	ND	U	g	0.33	ND	U	g			
Xylenes, total	0.0020		0.007	ND	U	g	0.89	0.45	J				
1,1,1,2-Tetrachloroethane	0.0010		0.003	ND	U	g	0.44	ND	U	g			
1,2,3-Trichloropropane	0.0023		0.008	ND	U	g	1.0	ND	U	g			
Bromochloromethane	0.0007		0.002	ND	U	g	0.30	ND	U	g			
1-Chlorohexane	0.0007		0.002	ND	U	g	0.29	ND	U	g			
Bromobenzene	0.0007		0.0024	ND	U	g	0.32	ND	U	g			

Base: Kotzebue LRRS						Table 7.2.1.3								
Site: ST05						Analytical Data Summary								
Extraction Method: EPA Method 5030						EPA Method 8260								
Analytical Method: EPA Method 8260														
Matrix: Soil														
Units: mg/kg														
			Environmental Samples											
		Field ID:		ST05-SB5-8.0										
		Batch ID:		H615										
Parameters	MDL		PQL	Result	Validity	Comments								
Chloromethane	0.0009		0.38	ND	U	g								
Bromomethane	0.0008		0.35	ND	U	g								
Vinyl Chloride	0.0010		0.41	ND	U	g								
Chloroethane	0.0010		0.43	ND	U	g								
Methylene Chloride	0.0009		0.37	0.12	B J	a								
Acetone	0.0039		1.7	0.93	B J	a								
Carbon Disulfide	0.0005		0.23	ND	U	g								
1,1-Dichloroethene	0.0012		0.50	ND	U	g								
1,1-Dichloroethane	0.0004		0.15	ND	U	g								
trans-1,2-Dichloroethene	0.0009		0.38	ND	U	g								
cis-1,2-Dichloroethene	0.0011		0.49	ND	U	g								
Chloroform	0.0005		0.20	ND	U	g								
1,2-Dichloroethane	0.0004		0.21	ND	U	g								
Methyl Ethyl Ketone (2-butanone)	0.0025		1.1	0.74	J									
1,1,1-Trichloroethane	0.0004		0.18	ND	U	g								
Carbon Tetrachloride	0.0010		0.42	ND	U	g								
Vinyl Acetate	0.0016		0.69	ND	U	g								
Bromodichloromethane	0.0006		0.28	ND	U	g								
1,2-Dichloropropane	0.0008		0.36	ND	U	g								
cis-1,3-Dichloropropene	0.0007		0.30	ND	U	g								
Trichloroethene (tce)	0.0005		0.23	ND	U	g								
Dibromochloromethane	0.0003		0.15	ND	U	g								
1,1,2-Trichloroethane	0.0007		0.30	ND	U	g								
Benzene	0.0005		0.20	ND	U	g								

Base: Kotzebue LRRS						Table 7.2.1.3								
Site: ST05						Analytical Data Summary								
Extraction Method: EPA Method 5030						EPA Method 8260								
Analytical Method: EPA Method 8260														
Matrix: Soil														
Units: mg/kg														
			Environmental Samples											
		Field ID:		ST05-SB5-8.0										
		Batch ID:		H615										
Parameters	MDL		PQL	Result	Validity	Comments								
trans-1,3-Dichloropropene	0.0005		0.23	ND	U	g								
2-Chloroethyl Vinyl Ether	0.0006		0.27	ND	U	g								
Bromoform	0.0013		0.54	ND	U	g								
Methyl Isobutyl Ketone	0.0025		0.64	ND	U	g								
2-Hexanone	0.0027		1.2	ND	U	g								
Tetrachloroethene (pce)	0.0009		0.39	ND	U	g								
1,1,2,2-Tetrachloroethane	0.0009		0.39	ND	U	g								
Toluene	0.0009		0.39	ND	U	g								
Chlorobenzene	0.0007		0.31	ND	U	g								
Ethylbenzene	0.0004		0.18	ND	U	g								
Styrene	0.0006		0.27	ND	U	g								
1,1,2-Trichloro-1,2,2-trifluoroethane	0.0007		0.32	ND	U	g								
Xylenes, total	0.0020		0.86	ND	U	g								
1,1,1,2-Tetrachloroethane	0.0010		0.43	ND	U	g								
1,2,3-Trichloropropane	0.0023		0.97	ND	U	g								
Bromochloromethane	0.0007		0.29	ND	U	g								
1-Chlorohexane	0.0007		0.28	ND	U	g								
Bromobenzene	0.0007		0.31	ND	U	g								

Base: Kotzebue LRRS
Site: ST05
Extraction Method: EPA Method 5030
Analytical Method: EPA Method 8260
Matrix: Soil
Units: mg/kg

Table 7.2.1.3
Analytical Data Summary
EPA Method 8260

			Environmental Samples											
		Field ID:	ST05-SB10-5.5-7.0				ST05-SB10-5.5-7.0RE				ST05-SB12-8.0-9.5			
		Batch ID:		H700				H700				H700		
Parameters	MDL		PQL	Result	Validity	Comments	PQL	Result	Validity	Comments	PQL	Result	Validity	Comments
Chloromethane	0.0009		0.38	ND	U	g	0.028	ND	U	g	0.003	ND	U	g
Bromomethane	0.0008		0.35	ND	U	g	0.026	ND	U	g	0.003	ND	U	g
Vinyl Chloride	0.0010		0.41	ND	U	g	0.030	ND	U	g	0.003	ND	U	g
Chloroethane	0.0010		0.44	ND	U	g	0.032	ND	U	g	0.003	ND	U	g
Methylene Chloride	0.0009		0.37	0.15	B J	a	0.027	0.016	B J	a	0.003	0.002	B J	a
Acetone	0.0039		1.7	0.89	B J	a	0.12	ND	U	g	0.01	ND	U	g
Carbon Disulfide	0.0005		0.23	ND	U	g	0.017	ND	U	g	0.002	ND	U	g
1,1-Dichloroethene	0.0012		0.50	ND	U	g	0.036	ND	U	g	0.004	ND	U	g
1,1-Dichloroethane	0.0004		0.16	ND	U	g	0.011	ND	U	g	0.001	ND	U	g
trans-1,2-Dichloroethene	0.0009		0.38	ND	U	g	0.028	ND	U	g	0.003	ND	U	g
cis-1,2-Dichloroethene	0.0011		0.49	ND	U	g	0.036	ND	U	g	0.004	ND	U	g
Chloroform	0.0005		0.20	ND	U	g	0.014	ND	U	g	0.002	ND	U	g
1,2-Dichloroethane	0.0004		0.22	ND	U	g	0.016	ND	U	g	0.002	ND	U	g
Methyl Ethyl Ketone (2-butanone)	0.0025		1.1	0.54	J		0.078	ND	U	g	0.008	ND	U	g
1,1,1-Trichloroethane	0.0004		0.19	ND	U	g	0.014	ND	U	g	0.001	ND	U	g
Carbon Tetrachloride	0.0010		0.42	ND	U	g	0.031	ND	U	g	0.003	ND	U	g
Vinyl Acetate	0.0016		0.70	ND	U	g	0.051	ND	U	g	0.005	ND	U	g
Bromodichloromethane	0.0006		0.28	ND	U	g	0.020	ND	U	g	0.002	ND	U	g
1,2-Dichloropropane	0.0008		0.36	ND	U	g	0.026	ND	U	g	0.003	ND	U	g
cis-1,3-Dichloropropene	0.0007		0.30	ND	U	g	0.022	ND	U	g	0.002	ND	U	g
Trichloroethene (tce)	0.0005		0.23	ND	U	g	0.017	ND	U	g	0.002	ND	U	g
Dibromochloromethane	0.0003		0.15	ND	U	g	0.011	ND	U	g	0.001	ND	U	g
1,1,2-Trichloroethane	0.0007		0.30	ND	U	g	0.022	ND	U	g	0.002	ND	U	g
Benzene	0.0005		0.20	ND	U	g	0.015	ND	U	g	0.0016	ND	U	g

Base: Kotzebue LRRS
Site: ST05
Extraction Method: EPA Method 5030
Analytical Method: EPA Method 8260
Matrix: Soil
Units: mg/kg

Table 7.2.1.3
Analytical Data Summary
EPA Method 8260

			Environmental Samples											
		Field ID:	ST05-SB10-5.5-7.0				ST05-SB10-5.5-7.0RE				ST05-SB12-8.0-9.5			
		Batch ID:		H700				H700				H700		
Parameters	MDL		PQL	Result	Validity	Comments	PQL	Result	Validity	Comments	PQL	Result	Validity	Comments
trans-1,3-Dichloropropene	0.0005		0.23	ND	U	g	0.017	ND	U	g	0.002	ND	U	g
2-Chloroethyl Vinyl Ether	0.0006		0.28	ND	U	g	0.020	ND	U	g	0.002	ND	U	g
Bromoform	0.0013		0.54	ND	U	g	0.040	ND	U	g	0.004	ND	U	g
Methyl Isobutyl Ketone	0.0025		0.65	ND	U	g	0.047	ND	U	g	0.005	ND	U	g
2-Hexanone	0.0027		1.2	ND	U	g	0.086	ND	U	g	0.009	ND	U	g
Tetrachloroethene (pce)	0.0009		0.39	ND	U	g	0.028	ND	U	g	0.003	ND	U	g
1,1,2,2-Tetrachloroethane	0.0009		0.39	ND	U	g	0.029	ND	U	g	0.0031	ND	U	g
Toluene	0.0009		0.39	ND	U	g	0.029	ND	U	g	0.0031	ND	U	g
Chlorobenzene	0.0007		0.31	ND	U	g	0.023	ND	U	g	0.002	ND	U	g
Ethylbenzene	0.0004		0.19	ND	U	g	0.014	ND	U	g	0.0015	ND	U	g
Styrene	0.0006		0.28	ND	U	g	0.020	ND	U	g	0.002	ND	U	g
1,1,2-Trichloro-1,2,2-trifluoroethane	0.0007		0.32	ND	U	g	0.023	ND	U	g	0.003	ND	U	g
Xylenes, total	0.0020		0.87	ND	U	g	0.063	ND	U	g	0.007	ND	U	g
1,1,1,2-Tetrachloroethane	0.0010		0.43	ND	U	g	0.031	ND	U	g	0.003	ND	U	g
1,2,3-Trichloropropane	0.0023		0.98	ND	U	g	0.071	ND	U	g	0.008	ND	U	g
Bromochloromethane	0.0007		0.29	ND	U	g	0.021	ND	U	g	0.002	ND	U	g
1-Chlorohexane	0.0007		0.28	ND	U	g	0.021	ND	U	g	0.002	ND	U	g
Bromobenzene	0.0007		0.32	ND	U	g	0.024	ND	U	g	0.0025	ND	U	g

Base: Kotzebue LRRS						Table 7.2.1.3								
Site: ST05						Analytical Data Summary								
Extraction Method: EPA Method 5030						EPA Method 8260								
Analytical Method: EPA Method 8260														
Matrix: Soil														
Units: mg/kg														
			Environmental Samples											
		Field ID:		ST05-SB13-6.0				ST05-SB14-5.5				ST05-SB14-9.5		
		Batch ID:		H718				H718				H718		
Parameters	MDL		PQL	Result	Validity	Comments	PQL	Result	Validity	Comments	PQL	Result	Validity	Comments
Chloromethane	0.0009		0.34	ND	U	g	0.37	ND	U	g	0.35	ND	U	g
Bromomethane	0.0008		0.32	ND	U	g	0.34	ND	U	g	0.33	ND	U	g
Vinyl Chloride	0.0010		0.37	ND	U	g	0.40	ND	U	g	0.38	ND	U	g
Chloroethane	0.0010		0.39	ND	U	g	0.42	ND	U	g	0.41	ND	U	g
Methylene Chloride	0.0009		0.34	0.23	B J	a	0.36	0.24	B J	a	0.35	0.23	B J	a
Acetone	0.0039		1.5	ND	U	g	1.6	0.75	B J	a	1.6	1.2	B J	a
Carbon Disulfide	0.0005		0.21	ND	U	g	0.23	ND	U	g	0.22	ND	U	g
1,1-Dichloroethene	0.0012		0.45	ND	U	g	0.49	ND	U	g	0.47	ND	U	g
1,1-Dichloroethane	0.0004		0.14	ND	U	g	0.15	ND	U	g	0.14	ND	U	g
trans-1,2-Dichloroethene	0.0009		0.34	ND	U	g	0.37	ND	U	g	0.35	ND	U	g
cis-1,2-Dichloroethene	0.0011		0.44	ND	U	g	0.48	ND	U	g	0.46	ND	U	g
Chloroform	0.0005		0.18	ND	U	g	0.19	ND	U	g	0.18	ND	U	g
1,2-Dichloroethane	0.0004		0.19	ND	U	g	0.21	ND	U	g	0.20	ND	U	g
Methyl Ethyl Ketone (2-butanone)	0.0025		0.96	ND	U	g	1.0	ND	U	g	0.99	ND	U	g
1,1,1-Trichloroethane	0.0004		0.17	ND	U	g	0.18	ND	U	g	0.17	ND	U	g
Carbon Tetrachloride	0.0010		0.38	ND	U	g	0.41	ND	U	g	0.39	ND	U	g
Vinyl Acetate	0.0016		0.63	ND	U	g	0.67	ND	U	g	0.65	ND	U	g
Bromodichloromethane	0.0006		0.25	ND	U	g	0.27	ND	U	g	0.26	ND	U	g
1,2-Dichloropropane	0.0008		0.33	ND	U	g	0.35	ND	U	g	0.34	ND	U	g
cis-1,3-Dichloropropene	0.0007		0.27	ND	U	g	0.29	ND	U	g	0.28	ND	U	g
Trichloroethene (tce)	0.0005		0.21	ND	U	g	0.23	ND	U	g	0.22	ND	U	g
Dibromochloromethane	0.0003		0.13	ND	U	g	0.14	ND	U	g	0.14	ND	U	g
1,1,2-Trichloroethane	0.0007		0.27	ND	U	g	0.29	ND	U	g	0.28	ND	U	g
Benzene	0.0005		0.18	ND	U	g	0.20	ND	U	g	0.19	ND	U	g

Base: Kotzebue LRRS
Site: ST05
Extraction Method: EPA Method 5030
Analytical Method: EPA Method 8260
Matrix: Soil
Units: mg/kg

Table 7.2.1.3
Analytical Data Summary
EPA Method 8260

			Environmental Samples											
		Field ID:		ST05-SB13-6.0				ST05-SB14-5.5				ST05-SB14-9.5		
		Batch ID:		H718				H718				H718		
Parameters	MDL		PQL	Result	Validity	Comments	PQL	Result	Validity	Comments	PQL	Result	Validity	Comments
trans-1,3-Dichloropropene	0.0005		0.21	ND	U	g	0.22	ND	U	g	0.21	ND	U	g
2-Chloroethyl Vinyl Ether	0.0006		0.25	ND	U	g	0.27	ND	U	g	0.26	ND	U	g
Bromoform	0.0013		0.49	ND	U	g	0.53	ND	U	g	0.51	ND	U	g
Methyl Isobutyl Ketone	0.0025		0.58	ND	U	g	0.63	ND	U	g	0.60	ND	U	g
2-Hexanone	0.0027		1.1	ND	U	g	1.1	ND	U	g	1.1	ND	U	g
Tetrachloroethene (pce)	0.0009		0.35	ND	U	g	0.38	ND	U	g	0.36	ND	U	g
1,1,2,2-Tetrachloroethane	0.0009		0.35	ND	U	g	0.38	ND	U	g	0.37	ND	U	g
Toluene	0.0009		0.35	ND	U	g	0.38	ND	U	g	0.37	ND	U	g
Chlorobenzene	0.0007		0.28	ND	U	g	0.53	ND	U	g	0.38	ND	U	g
Ethylbenzene	0.0004		0.17	ND	U	g	0.54	ND	J	n	0.17	0.44	J	n
Styrene	0.0006		0.25	ND	U	g	0.27	ND	U	g	0.26	ND	U	g
1,1,2-Trichloro-1,2,2-trifluoroethane	0.0007		0.29	ND	U	g	0.31	ND	U	g	0.30	ND	U	g
Xylenes, total	0.0020		0.78	ND	U	g	0.84	23		g	0.81	18		g
1,1,1,2-Tetrachloroethane	0.0010		0.39	ND	U	g	0.42	ND	U	g	0.40	ND	U	g
1,2,3-Trichloropropane	0.0023		0.88	ND	U	g	0.95	ND	U	g	0.91	ND	U	g
Bromochloromethane	0.0007		0.26	ND	U	g	0.28	ND	U	g	0.27	ND	U	g
1-Chlorohexane	0.0007		0.26	ND	U	g	0.28	ND	U	g	0.26	ND	U	g
Bromobenzene	0.0007		0.28	ND	U	g	0.31	ND	U	g	0.29	ND	U	g

Base: Kotzebue LRRS						Table 7.2.1.3								
Site: ST05						Analytical Data Summary								
Extraction Method: EPA Method 5030						EPA Method 8260								
Analytical Method: EPA Method 8260														
Matrix: Soil														
Units: mg/kg														
			Environmental Samples											
		Field ID:		ST05-SB15-5.0					ST05-SB16-4.0					
		Batch ID:		H718					H718					
Parameters	MDL		PQL	Result	Validity	Comments	PQL		Result	Validity	Comments			
Chloromethane	0.0009		0.014	ND	UJ	d	0.36		ND	U	g			
Bromomethane	0.0008		0.013	ND	UJ	d	0.34		ND	U	g			
Vinyl Chloride	0.0010		0.015	ND	UJ	d	0.39		ND	U	g			
Chloroethane	0.0010		0.016	ND	UJ	d	0.42		ND	U	g			
Methylene Chloride	0.0009		0.014	0.009	B J	a	0.35		0.30	B J	a			
Acetone	0.0039		0.06	ND	UJ	d	1.6		0.64	B J	a			
Carbon Disulfide	0.0005		0.009	ND	UJ	d	0.22		ND	U	g			
1,1-Dichloroethene	0.0012		0.019	ND	UJ	d	0.48		ND	U	g			
1,1-Dichloroethane	0.0004		0.006	ND	UJ	d	0.15		ND	U	g			
trans-1,2-Dichloroethene	0.0009		0.014	ND	UJ	d	0.36		ND	U	g			
cis-1,2-Dichloroethene	0.0011		0.018	ND	UJ	d	0.47		ND	U	g			
Chloroform	0.0005		0.007	ND	UJ	d	0.19		ND	U	g			
1,2-Dichloroethane	0.0004		0.008	ND	UJ	d	0.21		ND	U	g			
Methyl Ethyl Ketone (2-butanone)	0.0025		0.040	ND	UJ	d	1.0		ND	U	g			
1,1,1-Trichloroethane	0.0004		0.007	ND	UJ	d	0.18		ND	U	g			
Carbon Tetrachloride	0.0010		0.016	ND	UJ	d	0.40		ND	U	g			
Vinyl Acetate	0.0016		0.026	ND	UJ	d	0.66		ND	U	g			
Bromodichloromethane	0.0006		0.011	ND	UJ	d	0.27		ND	U	g			
1,2-Dichloropropane	0.0008		0.014	ND	UJ	d	0.35		ND	U	g			
cis-1,3-Dichloropropene	0.0007		0.011	ND	UJ	d	0.28		ND	U	g			
Trichloroethene (tce)	0.0005		0.009	ND	UJ	d	0.22		ND	U	g			
Dibromochloromethane	0.0003		0.006	ND	UJ	d	0.14		ND	U	g			
1,1,2-Trichloroethane	0.0007		0.011	ND	UJ	d	0.28		ND	U	g			
Benzene	0.0005		0.0076	ND	UJ	d	0.19		ND	U	g			

Base: Kotzebue LRRS						Table 7.2.1.3							
Site: ST05						Analytical Data Summary							
Extraction Method: EPA Method 5030						EPA Method 8260							
Analytical Method: EPA Method 8260													
Matrix: Soil													
Units: mg/kg													
			Environmental Samples										
		Field ID:		ST05-SB15-5.0				ST05-SB16-4.0					
		Batch ID:		H718				H718					
Parameters	MDL		PQL	Result	Validity	Comments	PQL	Result	Validity	Comments			
trans-1,3-Dichloropropene	0.0005		0.009	ND	U	g	0.22	ND	U	g			
2-Chloroethyl Vinyl Ether	0.0006		0.010	ND	U	g	0.26	ND	U	g			
Bromoform	0.0013		0.020	ND	U	g	0.52	ND	U	g			
Methyl Isobutyl Ketone	0.0025		0.024	ND	U	g	0.62	ND	U	g			
2-Hexanone	0.0027		0.044	ND	U	g	1.1	ND	U	g			
Tetrachloroethene (pce)	0.0009		0.015	ND	U	g	0.37	ND	U	g			
1,1,2,2-Tetrachloroethane	0.0009		0.015	ND	U	g	0.37	ND	U	g			
Toluene	0.0009		0.015	ND	U	g	0.37	ND	U	g			
Chlorobenzene	0.0007		0.012	ND	U	g	0.30	ND	U	g			
Ethylbenzene	0.0004		0.0070	ND	U	g	0.18	0.060	J				
Styrene	0.0006		0.010	ND	U	g	0.26	ND	U	g			
1,1,2-Trichloro-1,2,2-trifluoroethane	0.0007		0.012	ND	U	g	0.30	ND	U	g			
Xylenes, total	0.0020		0.033	ND	U	g	0.83	2.2	J	n			
1,1,1,2-Tetrachloroethane	0.0010		0.016	ND	U	g	0.41	ND	U	g			
1,2,3-Trichloropropane	0.0023		0.037	ND	U	g	0.93	ND	U	g			
Bromochloromethane	0.0007		0.011	ND	U	g	0.28	ND	U	g			
1-Chlorohexane	0.0007		0.011	ND	U	g	0.27	ND	U	g			
Bromobenzene	0.0007		0.012	ND	U	g	0.30	ND	U	g			

Base: Kotzebue LRRS						Table 7.2.1.3								
Site: ST05						Analytical Data Summary								
Extraction Method: EPA Method 5030						EPA Method 8260								
Analytical Method: EPA Method 8260														
Matrix: Soil														
Units: mg/kg														
			Environmental Samples											
		Field ID:		ST05-SB17-4.5				ST05-SB20-7.0						
		Batch ID:		H746				H746						
Parameters	MDL		PQL	Result	Validity	Comments	PQL	Result	Validity	Comments				
Chloromethane	0.0009		0.35	ND	U	g	0.36	ND	U	g				
Bromomethane	0.0008		0.33	ND	U	g	0.33	ND	U	g				
Vinyl Chloride	0.0010		0.38	ND	U	g	0.38	ND	U	g				
Chloroethane	0.0010		0.40	ND	U	g	0.41	ND	U	g				
Methylene Chloride	0.0009		0.34	0.36	B	a,k	0.35	0.39	B	a,k				
Acetone	0.0039		1.6	ND	U	a	1.6	1.2	B	a				
Carbon Disulfide	0.0005		0.21	ND	U	g	0.22	ND	U	g				
1,1-Dichloroethene	0.0012		0.46	ND	U	g	0.47	ND	U	g				
1,1-Dichloroethane	0.0004		0.14	ND	U	g	0.15	ND	U	g				
trans-1,2-Dichloroethene	0.0009		0.35	ND	U	g	0.36	ND	U	g				
cis-1,2-Dichloroethene	0.0011		0.45	ND	U	g	0.46	ND	U	g				
Chloroform	0.0005		0.18	ND	U	g	0.19	ND	U	g				
1,2-Dichloroethane	0.0004		0.20	ND	U	g	0.20	ND	U	g				
Methyl Ethyl Ketone (2-butanone)	0.0025		0.98	ND	U	g	1.0	ND	U	g				
1,1,1-Trichloroethane	0.0004		0.17	ND	U	g	0.17	ND	U	g				
Carbon Tetrachloride	0.0010		0.39	ND	U	g	0.40	ND	U	g				
Vinyl Acetate	0.0016		0.64	ND	U	g	0.65	ND	U	g				
Bromodichloromethane	0.0006		0.26	ND	U	g	0.26	ND	U	g				
1,2-Dichloropropane	0.0008		0.33	ND	U	g	0.34	ND	U	g				
cis-1,3-Dichloropropene	0.0007		0.27	ND	U	g	0.28	ND	U	g				
Trichloroethene (tce)	0.0005		0.21	ND	U	g	0.22	ND	U	g				
Dibromochloromethane	0.0003		0.13	ND	U	g	0.14	ND	U	g				
1,1,2-Trichloroethane	0.0007		0.27	ND	U	g	0.28	ND	U	g				
Benzene	0.0005		0.19	ND	U	g	0.19	ND	U	g				

Base: Kotzebue LRRS						Table 7.2.1.3								
Site: ST05						Analytical Data Summary								
Extraction Method: EPA Method 5030						EPA Method 8260								
Analytical Method: EPA Method 8260														
Matrix: Soil														
Units: mg/kg														
			Environmental Samples											
		Field ID:		ST05-SB17-4.5				ST05-SB20-7.0						
		Batch ID:		H746				H746						
Parameters	MDL		PQL	Result	Validity	Comments	PQL	Result	Validity	Comments				
trans-1,3-Dichloropropene	0.0005		0.21	ND	U	g	0.21	ND	U	g				
2-Chloroethyl Vinyl Ether	0.0006		0.25	ND	U	g	0.26	ND	U	g				
Bromoform	0.0013		0.50	ND	U	g	0.51	ND	U	g				
Methyl Isobutyl Ketone	0.0025		0.59	ND	U	g	0.61	ND	U	g				
2-Hexanone	0.0027		1.1	ND	U	g	1.1	ND	U	g				
Tetrachloroethene (pce)	0.0009		0.36	ND	U	g	0.36	ND	U	g				
1,1,2,2-Tetrachloroethane	0.0009		0.36	ND	U	g	0.37	ND	U	g				
Toluene	0.0009		0.36	ND	U	g	0.37	ND	U	g				
Chlorobenzene	0.0007		0.29	ND	U	g	0.29	ND	U	g				
Ethylbenzene	0.0004		0.17	ND	U	g	0.17	ND	U	g				
Styrene	0.0006		0.25	ND	U	g	0.26	ND	U	g				
1,1,2-Trichloro-1,2,2-trifluoroethane	0.0007		0.29	ND	U	g	0.30	ND	U	g				
Xylenes, total	0.0020		0.80	0.51	J	n	0.81	ND	U	g				
1,1,1,2-Tetrachloroethane	0.0010		0.40	ND	U	g	0.40	ND	U	g				
1,2,3-Trichloropropane	0.0023		0.90	ND	U	g	0.91	ND	U	g				
Bromochloromethane	0.0007		0.27	ND	U	g	0.27	ND	U	g				
1-Chlorohexane	0.0007		0.26	ND	U	g	0.27	ND	U	g				
Bromobenzene	0.0007		0.29	ND	U	g	0.29	ND	U	g				

Base: Kotzebue LRRS						Table 7.2.1.4								
Site: ST05						Analytical Data Summary								
Extraction Method: EPA Method 3550						EPA Method 8270								
Analytical Method: EPA Method 8270														
Matrix: Soil														
Units: mg/kg														
			Environmental Samples											
		Field ID:		ST05-SB1-8.5				ST05-SB3-8.0						
		Batch ID:		H607				H607						
Parameters	MDL		PQL	Result	Validity	Comments	PQL	Result	Validity	Comments				
Phenol	0.05		0.2	ND	U	g	2.0	ND	U	g				
bis(2-Chloroethyl) Ether	0.04		0.1	ND	U	g	1.4	ND	U	g				
2-Chlorophenol	0.07		0.3		U	g	2.6	ND	U	g				
1,3-Dichlorobenzene	0.04		0.1	ND	U	g	1.4	ND	U	g				
1,4-Dichlorobenzene	0.03		0.1	ND	U	g	0.9	ND	U	g				
Benzyl Alcohol	0.05		0.2	ND	U	g	1.9	ND	U	g				
1,2-Dichlorobenzene	0.04		0.1	ND	U	g	1.4	ND	U	g				
2-Methylphenol	0.10		0.4	ND	U	g	3.6	ND	U	g				
2,2'-Oxybis (1-Chloropropane)	0.03		0.1	ND	U	g	1.2	ND	U	g				
4-Methylphenol	0.08		0.3	ND	U	g	2.8	ND	U	g				
N-Nitrosodi-n-propylamine	0.03		0.1	ND	U	g	1.0	ND	U	g				
Hexachloroethane	0.04		0.1	ND	U	g	1.4	ND	U	g				
Nitrobenzene	0.02		0.1	ND	U	g	0.9	ND	U	g				
Isophorone	0.03		0.1	ND	U	g	1.2	2.8		g				
2-Nitrophenol	0.03		0.1	ND	U	g	1.3	ND	U	g				
2,4-Dimethylphenol	0.17		0.3	ND	U	g	3.5	ND	U	g				
Benzoic Acid	0.06		0.21	ND	U	g	2.1	ND	U	g				
bis(2-Chloroethoxy) Methane	0.04		0.1	ND	U	g	1.3	ND	U	g				
2,4-Dichlorophenol	0.04		0.2	ND	U	g	1.6	ND	U	g				
1,2,4-Trichlorobenzene	0.03		0.1	ND	U	g	1.2	ND	U	g				
Naphthalene	0.04		0.1	ND	U	g	1.3	ND	U	g				
4-Chloroaniline	0.10		0.4	ND	U	g	3.8	ND	U	g				
Hexachlorobutadiene	0.03		0.1	ND	U	g	1.2	ND	U	g				
4-Chloro-3-Methylphenol	0.06		0.2	ND	U	g	2.2	ND	U	g				
2-Methylnaphthalene	0.03		0.1	ND	U	g	1.2	ND	U	g				
Hexachlorocyclopentadiene	0.03		0.1	ND	U	g	0.9	ND	U	g				
2,4,6-Trichlorophenol	0.04		0.2	ND	U	g	1.6	ND	U	g				
2,4,5-Trichlorophenol	0.03		0.09	ND	U	g	0.92	ND	U	g				
2-Chloronaphthalene	0.03		0.1	ND	U	g	1.2	ND	U	g				
2-Nitroaniline	0.02		0.07	ND	U	g	0.70	ND	U	g				
Dimethyl Phthalate	0.04		0.1	ND	U	g	1.3	ND	U	g				
Acenaphthylene	0.04		0.1	ND	U	g	1.5	ND	U	g				
3-Nitroaniline	0.11		0.41	ND	U	g	4.1	ND	U	g				
Acenaphthene	0.03		0.1	ND	U	g	1.1	ND	U	g				
2,4-Dinitrophenol	0.09		0.33	ND	U	g	3.3	ND	U	g				
4-Nitrophenol	0.07		0.24	ND	U	g	2.4	ND	U	g				
Dibenzofuran	0.03		0.1	ND	U	g	1.1	ND	U	g				
2,6-Dinitrotoluene	0.04		0.2	ND	U	g	1.6	ND	U	g				

Base: Kotzebue LRRS						Table 7.2.1.4								
Site: ST05						Analytical Data Summary								
Extraction Method: EPA Method 3550						EPA Method 8270								
Analytical Method: EPA Method 8270														
Matrix: Soil														
Units: mg/kg														
			Environmental Samples											
		Field ID:		ST05-SB1-8.5				ST05-SB3-8.0						
		Batch ID:		H607				H607						
Parameters	MDL		PQL	Result	Validity	Comments	PQL	Result	Validity	Comments				
2,4-Dinitrotoluene	0.02		0.1	ND	U	g	0.8	ND	U	g				
Diethyl Phthalate	0.04		0.1	ND	U	g	1.3	ND	U	g				
4-Chlorophenyl Phenyl Ether	0.02		0.1	ND	U	g	0.8	ND	U	g				
Fluorene	0.03		0.1	ND	U	g	1.1	ND	U	g				
4-Nitroaniline	0.13		0.49	ND	U	g	4.9	ND	U	g				
4,6-Dinitro-2-Methylphenol	0.09		0.33	ND	U	g	3.3	ND	U	g				
N-Nitrosodiphenylamine	0.08		0.3	ND	U	g	3.1	ND	U	g				
4-Bromophenyl Phenyl Ether	0.02		0.1	ND	U	g	0.8	ND	U	g				
Hexachlorobenzene	0.03		0.1	ND	U	g	1.2	ND	U	g				
Pentachlorophenol	0.03		0.12	ND	U	g	1.2	ND	U	g				
Phenanthrene	0.03		0.1	ND	U	g	1.2	ND	U	g				
Anthracene	0.04		0.2	ND	U	g	1.6	ND	U	g				
di-n-butyl Phthalate	0.06		0.2	ND	U	g	2.3	ND	U	g				
Fluroanthene	0.03		0.1	ND	U	g	1.2	ND	U	g				
Pyrene	0.03		0.1	ND	U	g	1.1	ND	U	g				
Butylbenzylphthalate	0.02		0.1	ND	U	g	0.8	ND	U	g				
3,3'-Dichlorobenzidine	0.06		0.2	ND	U	g	2.1	ND	U	g				
Benzo(a)anthracene	0.04		0.1	ND	U	g	1.4	ND	U	g				
bis(2-Ethylhexyl) Phthalate	0.04		0.1	ND	U	g	1.5	ND	U	g				
Chrysene	0.05		0.2	ND	U	g	1.7	ND	U	g				
di-n-Octylphthalate	0.02		0.1	ND	U	g	0.8	ND	U	g				
Benzo(b)fluoranthene	0.04		0.2	ND	U	g	1.6	ND	U	g				
Benzo(k)fluoranthene	0.07		0.3	ND	U	g	2.7	ND	U	g				
Benzo(a)pyrene	0.04		0.1	ND	U	g	1.5	ND	U	g				
Indeno(1,2,3-c,d)pyrene	0.03		0.1	ND	U	g	1.0	ND	U	g				
Dibenzo(a,h)anthracene	0.02		0.1	ND	U	g	0.8	ND	U	g				
Benzo(g,h,i)perylene	0.03		0.1	ND	U	g	1.2	ND	U	g				

Base: Kotzebue LRRS						Table 7.2.1.4								
Site: ST05						Analytical Data Summary								
Extraction Method: EPA Method 3550						EPA Method 8270								
Analytical Method: EPA Method 8270														
Matrix: Soil														
Units: mg/kg														
			Environmental Samples											
		Field ID:		ST05-SB5-8.0										
		Batch ID:		H615										
Parameters	MDL		PQL	Result	Validity	Comments								
				Dilution 2										
Phenol	0.05		0.4	ND	U	g								
bis(2-Chloroethyl) Ether	0.04		0.3	ND	U	g								
2-Chlorophenol	0.07		0.5	ND	U	g								
1,3-Dichlorobenzene	0.04		0.3	ND	U	g								
1,4-Dichlorobenzene	0.03		0.2	ND	U	g								
Benzyl Alcohol	0.05		0.4	ND	U	g								
1,2-Dichlorobenzene	0.04		0.3	ND	U	g								
2-Methylphenol	0.10		0.7	ND	U	g								
2,2'-Oxybis (1-Chloropropane)	0.03		0.2	ND	U	g								
4-Methylphenol	0.08		0.5	ND	U	g								
N-Nitrosodi-n-propylamine	0.03		0.2	ND	U	g								
Hexachloroethane	0.04		0.3	ND	U	g								
Nitrobenzene	0.02		0.2	ND	U	g								
Isophorone	0.03		0.2	ND	U	g								
2-Nitrophenol	0.03		0.2	ND	U	g								
2,4-Dimethylphenol	0.17		0.7	ND	U	g								
Benzoic Acid	0.06		0.40	ND	U	g								
bis(2-Chloroethoxy) Methane	0.04		0.3	ND	U	g								
2,4-Dichlorophenol	0.04		0.3	ND	U	g								
1,2,4-Trichlorobenzene	0.03		0.2	ND	U	g								
Naphthalene	0.04		0.2	ND	U	g								
4-Chloroaniline	0.10		0.7	ND	U	g								
Hexachlorobutadiene	0.03		0.2	ND	U	g								
4-Chloro-3-Methylphenol	0.06		0.4	ND	U	g								
2-Methylnaphthalene	0.03		0.2	ND	U	g								
Hexachlorocyclopentadiene	0.03		0.2	ND	U	g								
2,4,6-Trichlorophenol	0.04		0.3	ND	U	g								
2,4,5-Trichlorophenol	0.03		0.18	ND	U	g								
2-Chloronaphthalene	0.03		0.2	ND	U	g								
2-Nitroaniline	0.02		0.13	ND	U	g								
Dimethyl Phthalate	0.04		0.3	ND	U	g								
Acenaphthylene	0.04		0.3	ND	U	g								
3-Nitroaniline	0.11		0.78	ND	U	g								
Acenaphthene	0.03		0.2	ND	U	g								
2,4-Dinitrophenol	0.09		0.63	ND	U	g								
4-Nitrophenol	0.07		0.47	ND	U	g								
Dibenzofuran	0.03		0.2	ND	U	g								
2,6-Dinitrotoluene	0.04		0.3	ND	U	g								

Base: Kotzebue LRRS
Site: ST05
Extraction Method: EPA Method 3550
Analytical Method: EPA Method 8270
Matrix: Soil
Units: mg/kg

Table 7.2.1.4
Analytical Data Summary
EPA Method 8270

		Environmental Samples	
	Field ID:		ST05-SB5-8.0
	Batch ID:		H615

Parameters	MDL	PQL	Result Dilution 2	Validity	Comments
2,4-Dinitrotoluene	0.02	0.2	ND	U	g
Diethyl Phthalate	0.04	0.2	ND	U	g
4-Chlorophenyl Phenyl Ether	0.02	0.2	ND	U	g
Fluorene	0.03	0.2	ND	U	g
4-Nitroaniline	0.13	0.94	ND	U	g
4,6-Dinitro-2-Methylphenol	0.09	0.63	ND	U	g
N-Nitrosodiphenylamine	0.08	0.6	ND	U	g
4-Bromophenyl Phenyl Ether	0.02	0.2	ND	U	g
Hexachlorobenzene	0.03	0.2	ND	U	g
Pentachlorophenol	0.03	0.23	ND	U	g
Phenanthrene	0.03	0.2	ND	U	g
Anthracene	0.04	0.3	ND	U	g
di-n-butyl Phthalate	0.06	0.4	ND	U	g
Fluroanthene	0.03	0.2	ND	U	g
Pyrene	0.03	0.2	ND	U	g
Butylbenzylphthalate	0.02	0.2	ND	U	g
3,3'-Dichlorobenzidine	0.06	0.4	ND	U	g
Benzo(a)anthracene	0.04	0.3	ND	U	g
bis(2-Ethylhexyl) Phthalate	0.04	0.3	ND	U	g
Chrysene	0.05	0.3	ND	U	g
di-n-Octylphthalate	0.02	0.2	ND	U	g
Benzo(b)fluoranthene	0.04	0.3	ND	U	g
Benzo(k)fluoranthene	0.07	0.5	ND	U	g
Benzo(a)pyrene	0.04	0.3	ND	U	g
Indeno(1,2,3-c,d)pyrene	0.03	0.2	ND	U	g
Dibenzo(a,h)anthracene	0.02	0.2	ND	U	g
Benzo(g,h,i)perylene	0.03	0.2	ND	U	g

Base: Kotzebue LRRS
Site: ST05
Extraction Method: EPA Method 3550
Analytical Method: EPA Method 8270
Matrix: Soil
Units: mg/kg

Table 7.2.1.4
Analytical Data Summary
EPA Method 8270

Environmental Samples

Parameters	MDL	Field ID:	ST05-SB10-7.0-8.5				ST05-SB12-8.0-9.5			
		Batch ID:	PQL	H700 Result	Validity	Comments	PQL	H700 Result	Validity	Comments
Phenol	0.05		2.0	ND	U	g	0.2	ND	U	g
bis(2-Chloroethyl) Ether	0.04		1.4	ND	U	g	0.1	ND	U	g
2-Chlorophenol	0.07		2.6	ND	U	g	0.3	ND	U	g
1,3-Dichlorobenzene	0.04		1.4	ND	U	g	0.1	ND	U	g
1,4-Dichlorobenzene	0.03		0.9	ND	U	g	0.1	ND	U	g
Benzyl Alcohol	0.05		1.9	ND	U	g	0.2	ND	U	g
1,2-Dichlorobenzene	0.04		1.4	ND	U	g	0.1	ND	U	g
2-Methylphenol	0.10		3.6	ND	U	g	0.3	ND	U	g
2,2'-Oxybis (1-Chloropropane)	0.03		1.2	ND	U	g	0.1	ND	U	g
4-Methylphenol	0.08		2.8	ND	U	g	0.3	ND	U	g
N-Nitrosodi-n-propylamine	0.03		1.0	ND	U	g	0.1	ND	U	g
Hexachloroethane	0.04		1.4	ND	U	g	0.1	ND	U	g
Nitrobenzene	0.02		1.4	ND	U	g	0.1	ND	U	g
Isophorone	0.03		2.3	ND	U	g	0.1	ND	U	g
2-Nitrophenol	0.03		2.2	ND	U	g	0.1	ND	U	g
2,4-Dimethylphenol	0.17		3.4	ND	U	g	0.3	ND	U	g
Benzoic Acid	0.06		2.0	ND	U	g	0.20	ND	U	g
bis(2-Chloroethoxy) Methane	0.04		1.3	ND	U	g	0.1	ND	U	g
2,4-Dichlorophenol	0.04		1.6	ND	U	g	0.2	ND	U	g
1,2,4-Trichlorobenzene	0.03		1.2	ND	U	g	0.1	ND	U	g
Naphthalene	0.04		1.3	ND	U	g	0.1	ND	U	g
4-Chloroaniline	0.10		3.7	ND	U	g	0.4	ND	U	g
Hexachlorobutadiene	0.03		1.2	ND	U	g	0.1	ND	U	g
4-Chloro-3-Methylphenol	0.06		2.1	ND	U	g	0.2	ND	U	g
2-Methylnaphthalene	0.03		1.2	1.0	J		0.1	ND	U	g
Hexachlorocyclopentadiene	0.03		0.9	ND	U	g	0.1	ND	U	g
2,4,6-Trichlorophenol	0.04		1.5	ND	U	g	0.2	ND	U	g
2,4,5-Trichlorophenol	0.03		0.91	ND	U	g	0.09	ND	U	g
2-Chloronaphthalene	0.03		1.2	ND	U	g	0.1	ND	U	g
2-Nitroaniline	0.02		0.69	ND	U	g	0.07	ND	U	g
Dimethyl Phthalate	0.04		1.3	ND	U	g	0.1	ND	U	g
Acenaphthylene	0.04		1.5	ND	U	g	0.1	ND	U	g
3-Nitroaniline	0.11		4.0	ND	U	g	0.39	ND	U	g
Acenaphthene	0.03		1.1	ND	U	g	0.1	ND	U	g
2,4-Dinitrophenol	0.09		3.2	ND	U	g	0.32	ND	U	g
4-Nitrophenol	0.07		4.9	ND	U	g	0.24	ND	U	g
Dibenzofuran	0.03		1.1	ND	U	g	0.1	ND	U	g
2,6-Dinitrotoluene	0.04		1.5	ND	U	g	0.2	ND	U	g

Base: Kotzebue LRRS
Site: ST05
Extraction Method: EPA Method 3550
Analytical Method: EPA Method 8270
Matrix: Soil
Units: mg/kg

Table 7.2.1.4
Analytical Data Summary
EPA Method 8270

			Environmental Samples							
		Field ID:	ST05-SB10-7.0-8.5				ST05-SB12-8.0-9.5			
		Batch ID:		H700				H700		
Parameters	MDL		PQL	Result	Validity	Comments	PQL	Result	Validity	Comments
2,4-Dinitrotoluene	0.02		0.8	ND	U	g	0.1	ND	U	g
Diethyl Phthalate	0.04		1.3	ND	U	g	0.1	ND	U	g
4-Chlorophenyl Phenyl Ether	0.02		0.8	ND	U	g	0.1	ND	U	g
Fluorene	0.03		1.1	ND	U	g	0.1	ND	U	g
4-Nitroaniline	0.13		4.8	ND	U	g	0.47	ND	U	g
4,6-Dinitro-2-Methylphenol	0.09		3.2	ND	U	g	0.32	ND	U	g
N-Nitrosodiphenylamine	0.08		3.1	ND	U	g	0.3	ND	U	g
4-Bromophenyl Phenyl Ether	0.02		0.8	ND	U	g	0.1	ND	U	g
Hexachlorobenzene	0.03		1.2	ND	U	g	0.1	ND	U	g
Pentachlorophenol	0.03		1.2	ND	U	g	0.12	ND	U	g
Phenanthrene	0.03		1.2	ND	U	g	0.1	ND	U	g
Anthracene	0.04		1.6	ND	U	g	0.2	ND	U	g
di-n-butyl Phthalate	0.06		2.3	ND	U	g	0.2	ND	U	g
Fluroanthene	0.03		1.2	ND	U	g	0.1	ND	U	g
Pyrene	0.03		1.0	ND	U	g	0.1	ND	U	g
Butylbenzylphthalate	0.02		0.8	ND	U	g	0.1	ND	U	g
3,3'-Dichlorobenzidine	0.06		2.1	ND	U	g	0.2	ND	U	g
Benzo(a)anthracene	0.04		1.4	ND	U	g	0.1	ND	U	g
bis(2-Ethylhexyl) Phthalate	0.04		1.5	ND	U	g	0.1	ND	U	g
Chrysene	0.05		1.6	ND	U	g	0.2	ND	U	g
di-n-Octylphthalate	0.02		0.8	ND	U	g	0.1	ND	U	g
Benzo(b)fluoranthene	0.04		1.6	ND	U	g	0.2	ND	U	g
Benzo(k)fluoranthene	0.07		2.7	ND	U	g	0.3	ND	U	g
Benzo(a)pyrene	0.04		1.4	ND	U	g	0.1	ND	U	g
Indeno(1,2,3-c,d)pyrene	0.03		1.0	ND	U	g	0.1	ND	U	g
Dibenzo(a,h)anthracene	0.02		0.8	ND	U	g	0.1	ND	U	g
Benzo(g,h,i)perylene	0.03		1.2	ND	U	g	0.1	ND	U	g

Base: Kotzebue LRRS
Site: ST05
Extraction Method: EPA Method 3550
Analytical Method: EPA Method 8270
Matrix: Soil
Units: mg/kg

Table 7.2.1.4
Analytical Data Summary
EPA Method 8270

			Environmental Samples											
		Field ID:		ST05-SB13-5.5				ST05-SB14-12.5				ST05-SB14-8.5		
		Batch ID:		H718				H718				H718		
Parameters	MDL		PQL	Result	Validity	Comments	PQL	Result	Validity	Comments	PQL	Result	Validity	Comments
Phenol	0.05		1.8	ND	U	g	0.2	ND	U	g	0.2	ND	U	g
bis(2-Chloroethyl) Ether	0.04		1.3	ND	U	g	0.1	ND	U	g	0.1	ND	U	g
2-Chlorophenol	0.07		2.4	ND	U	g	0.3	ND	U	g	0.3	ND	U	g
1,3-Dichlorobenzene	0.04		1.3	ND	U	g	0.1	ND	U	g	0.1	ND	U	g
1,4-Dichlorobenzene	0.03		0.9	ND	U	g	0.1	ND	U	g	0.1	ND	U	g
Benzyl Alcohol	0.05		1.7	ND	U	g	0.2	ND	U	g	0.2	ND	U	g
1,2-Dichlorobenzene	0.04		1.3	ND	U	g	0.1	ND	U	g	0.1	ND	U	g
2-Methylphenol	0.10		3.3	ND	U	g	0.4	ND	U	g	0.4	ND	U	g
2,2'-Oxybis (1-Chloropropane)	0.03		1.1	ND	U	g	0.1	ND	U	g	0.1	ND	U	g
4-Methylphenol	0.08		2.6	ND	U	g	0.3	ND	U	g	0.3	ND	U	g
N-Nitrosodi-n-propylamine	0.03		0.9	ND	U	g	0.1	ND	U	g	0.1	ND	U	g
Hexachloroethane	0.04		1.3	ND	U	g	0.1	ND	U	g	0.1	ND	U	g
Nitrobenzene	0.02		1.6	ND	U	g	0.1	ND	U	g	0.1	ND	U	g
Isophorone	0.03		1.1	ND	U	g	0.1	ND	U	g	0.1	ND	U	g
2-Nitrophenol	0.03		2.6	ND	U	g	0.1	ND	U	g	0.2	ND	U	g
2,4-Dimethylphenol	0.17		3.2	ND	U	g	0.3	ND	U	g	0.3	ND	U	g
Benzoic Acid	0.06		1.9	ND	U	g	0.21	ND	U	g	0.20	ND	U	g
bis(2-Chloroethoxy) Methane	0.04		1.2	ND	U	g	0.1	ND	U	g	0.1	ND	U	g
2,4-Dichlorophenol	0.04		1.5	ND	U	g	0.2	ND	U	g	0.2	ND	U	g
1,2,4-Trichlorobenzene	0.03		1.1	ND	U	g	0.1	ND	U	g	0.1	ND	U	g
Naphthalene	0.04		1.2	ND	U	g	0.1	1.9		g	0.1	2.2		g
4-Chloroaniline	0.10		3.5	ND	U	g	0.4	ND	U	g	0.4	ND	U	g
Hexachlorobutadiene	0.03		1.1	ND	U	g	0.1	ND	U	g	0.1	ND	U	g
4-Chloro-3-Methylphenol	0.06		2.0	ND	U	g	0.2	ND	U	g	0.2	ND	U	g
2-Methylnaphthalene	0.03		1.1	3.7		g	0.1	4.1		g	0.1	5.0		g
Hexachlorocyclopentadiene	0.03		0.9	ND	U	g	0.1	ND	U	g	0.1	ND	U	g
2,4,6-Trichlorophenol	0.04		1.4	ND	U	g	0.2	ND	U	g	0.2	ND	U	g
2,4,5-Trichlorophenol	0.03		0.85	ND	U	g	0.09	ND	U	g	0.09	ND	U	g
2-Chloronaphthalene	0.03		1.1	ND	U	g	0.1	ND	U	g	0.1	ND	U	g
2-Nitroaniline	0.02		0.65	ND	U	g	0.22	ND	U	g	0.46	ND	U	g
Dimethyl Phthalate	0.04		1.2	ND	U	g	0.1	ND	U	g	0.1	ND	U	g
Acenaphthylene	0.04		1.4	ND	U	g	0.1	ND	U	g	0.1	ND	U	g
3-Nitroaniline	0.11		3.8	ND	U	g	0.40	ND	U	g	0.40	ND	U	g
Acenaphthene	0.03		1.0	ND	U	g	0.1	0.1	J	n	0.1	0.1	J	n
2,4-Dinitrophenol	0.09		3.0	ND	U	g	0.32	ND	U	g	0.32	ND	U	g
4-Nitrophenol	0.07		7.1	ND	U	g	0.44	ND	U	g	0.52	ND	U	g
Dibenzofuran	0.03		1.1	ND	U	g	0.1	ND	U	g	0.1	0.1	J	n
2,6-Dinitrotoluene	0.04		1.4	ND	U	g	0.2	ND	U	g	0.2	ND	U	g

Base: Kotzebue LRRS						Table 7.2.1.4								
Site: ST05						Analytical Data Summary								
Extraction Method: EPA Method 3550						EPA Method 8270								
Analytical Method: EPA Method 8270														
Matrix: Soil														
Units: mg/kg														
			Environmental Samples											
		Field ID:		ST05-SB13-5.5				ST05-SB14-12.5				ST05-SB14-8.5		
		Batch ID:		H718				H718				H718		
Parameters	MDL		PQL	Result	Validity	Comments	PQL	Result	Validity	Comments	PQL	Result	Validity	Comments
2,4-Dinitrotoluene	0.02		0.8	ND	U	g	0.1	ND	U	g	0.1	ND	U	g
Diethyl Phthalate	0.04		1.2	ND	U	g	0.1	ND	U	g	0.1	ND	U	g
4-Chlorophenyl Phenyl Ether	0.02		0.7	ND	U	g	0.1	ND	U	g	0.1	ND	U	g
Fluorene	0.03		1.0	0.5	J	n	0.1	0.1	J		0.1	0.2		g
4-Nitroaniline	0.13		4.5	ND	U	g	0.48	ND	U	g	0.48	ND	U	g
4,6-Dinitro-2-Methylphenol	0.09		3.0	ND	U	g	0.32	ND	U	g	0.32	ND	U	g
N-Nitrosodiphenylamine	0.08		2.9	ND	U	g	0.3	ND	U	g	0.3	ND	U	g
4-Bromophenyl Phenyl Ether	0.02		0.7	ND	U	g	0.1	ND	U	g	0.1	ND	U	g
Hexachlorobenzene	0.03		1.1	ND	U	g	0.1	ND	U	g	0.1	ND	U	g
Pentachlorophenol	0.03		1.1	ND	U	g	0.12	ND	U	g	0.12	ND	U	g
Phenanthrene	0.03		1.1	ND	U	g	0.1	0.1	J		0.1	0.1	J	
Anthracene	0.04		1.5	ND	U	g	0.2	ND	U	g	0.2	ND	U	g
di-n-butyl Phthalate	0.06		2.1	ND	U	g	0.2	ND	U	g	0.2	ND	U	g
Fluroanthene	0.03		1.1	ND	U	g	0.1	ND	U	g	0.1	ND	U	g
Pyrene	0.03		1.0	ND	U	g	0.1	ND	U	g	0.1	ND	U	g
Butylbenzylphthalate	0.02		0.8	ND	U	g	0.1	ND	U	g	0.1	ND	U	g
3,3'-Dichlorobenzidine	0.06		2.0	ND	U	g	0.2	ND	U	g	0.2	ND	U	g
Benzo(a)anthracene	0.04		1.3	ND	U	g	0.1	ND	U	g	0.1	ND	U	g
bis(2-Ethylhexyl) Phthalate	0.04		1.4	ND	U	g	0.1	ND	U	g	0.1	ND	U	g
Chrysene	0.05		1.5	ND	U	g	0.2	ND	U	g	0.2	ND	U	g
di-n-Octylphthalate	0.02		0.8	ND	U	g	0.1	ND	U	g	0.1	ND	U	g
Benzo(b)fluoranthene	0.04		1.5	ND	U	g	0.2	ND	U	g	0.2	ND	U	g
Benzo(k)fluoranthene	0.07		2.5	ND	U	g	0.3	ND	U	g	0.3	ND	U	g
Benzo(a)pyrene	0.04		1.3	ND	U	g	0.1	ND	U	g	0.1	ND	U	g
Indeno(1,2,3-c,d)pyrene	0.03		0.9	ND	U	g	0.1	ND	U	g	0.1	ND	U	g
Dibenzo(a,h)anthracene	0.02		0.7	ND	U	g	0.1	ND	U	g	0.1	ND	U	g
Benzo(g,h,i)perylene	0.03		1.1	ND	U	g	0.1	ND	U	g	0.1	ND	U	g

Base: Kotzebue LRRS
Site: ST05
Extraction Method: EPA Method 3550
Analytical Method: EPA Method 8270
Matrix: Soil
Units: mg/kg

Table 7.2.1.4
Analytical Data Summary
EPA Method 8270

			Environmental Samples							
		Field ID:		ST05-SB15-6.0				ST05-SB16-5.5		
		Batch ID:		H718				H718		
Parameters	MDL		PQL	Result	Validity	Comments	PQL	Result	Validity	Comments
Phenol	0.05		0.2	ND	U	g	1.9	ND	U	g
bis(2-Chloroethyl) Ether	0.04		0.1	ND	U	g	1.4	ND	U	g
2-Chlorophenol	0.07		0.3	ND	U	g	2.5	ND	U	g
1,3-Dichlorobenzene	0.04		0.1	ND	U	g	1.3	ND	U	g
1,4-Dichlorobenzene	0.03		0.1	ND	U	g	0.9	ND	U	g
Benzyl Alcohol	0.05		0.2	ND	U	g	1.8	ND	U	g
1,2-Dichlorobenzene	0.04		0.1	ND	U	g	1.3	ND	U	g
2-Methylphenol	0.10		0.4	ND	U	g	3.4	ND	U	g
2,2'-Oxybis (1-Chloropropane)	0.03		0.1	ND	U	g	1.1	ND	U	g
4-Methylphenol	0.08		0.3	ND	U	g	2.7	ND	U	g
N-Nitrosodi-n-propylamine	0.03		0.1	ND	U	g	6.9	ND	U	d
Hexachloroethane	0.04		0.1	ND	U	g	1.4	ND	U	g
Nitrobenzene	0.02		0.1	ND	U	g	2.6	ND	U	g
Isophorone	0.03		0.1	ND	U	g	1.3	ND	U	g
2-Nitrophenol	0.03		0.1	ND	U	g	3.7	ND	U	g
2,4-Dimethylphenol	0.17		0.3	ND	U	g	3.3	ND	U	g
Benzoic Acid	0.06		0.21	ND	U	g	2.0	ND	U	g
bis(2-Chloroethoxy) Methane	0.04		0.1	ND	U	g	1.6	ND	U	g
2,4-Dichlorophenol	0.04		0.2	ND	U	g	1.7	ND	U	g
1,2,4-Trichlorobenzene	0.03		0.1	ND	U	g	1.2	ND	U	g
Naphthalene	0.04		0.1	ND	U	g	1.2	18		g
4-Chloroaniline	0.10		0.4	ND	U	g	3.6	ND	U	g
Hexachlorobutadiene	0.03		0.1	ND	U	g	1.2	ND	U	g
4-Chloro-3-Methylphenol	0.06		0.2	ND	U	g	2.0	ND	U	g
2-Methylnaphthalene	0.03		0.1	ND	U	g	1.2	55		g
Hexachlorocyclopentadiene	0.03		0.1	ND	U	g	0.9	ND	U	g
2,4,6-Trichlorophenol	0.04		0.2	ND	U	g	1.5	ND	U	g
2,4,5-Trichlorophenol	0.03		0.09	ND	U	g	0.87	ND	U	g
2-Chloronaphthalene	0.03		0.1	ND	U	g	1.2	ND	U	g
2-Nitroaniline	0.02		0.07	ND	U	g	2.0	ND	U	g
Dimethyl Phthalate	0.04		0.1	ND	U	g	1.2	ND	U	g
Acenaphthylene	0.04		0.1	ND	U	g	1.4	ND	U	g
3-Nitroaniline	0.11		0.40	ND	U	g	3.8	ND	U	g
Acenaphthene	0.03		0.1	ND	U	g	1.1	0.6	J	n
2,4-Dinitrophenol	0.09		0.32	ND	U	g	3.1	ND	U	g
4-Nitrophenol	0.07		0.24	ND	U	g	9.2	ND	U	g
Dibenzofuran	0.03		0.1	ND	U	g	1.1	0.9	J	n
2,6-Dinitrotoluene	0.04		0.2	ND	U	g	1.5	ND	U	g

Base: Kotzebue LRRS
Site: ST05
Extraction Method: EPA Method 3550
Analytical Method: EPA Method 8270
Matrix: Soil
Units: mg/kg

Table 7.2.1.4
Analytical Data Summary
EPA Method 8270

			Environmental Samples							
		Field ID:		ST05-SB15-6.0				ST05-SB16-5.5		
		Batch ID:		H718				H718		
Parameters	MDL		PQL	Result	Validity	Comments	PQL	Result	Validity	Comments
2,4-Dinitrotoluene	0.02		0.1	ND	U	g	0.8	ND	U	g
Diethyl Phthalate	0.04		0.1	ND	U	g	1.2	ND	U	g
4-Chlorophenyl Phenyl Ether	0.02		0.1	ND	U	g	0.8	ND	U	g
Fluorene	0.03		0.1	ND	U	g	1.0	1.7		g
4-Nitroaniline	0.13		0.48	ND	U	g	4.6	ND	U	g
4,6-Dinitro-2-Methylphenol	0.09		0.32	ND	U	g	3.1	ND	U	g
N-Nitrosodiphenylamine	0.08		0.3	ND	U	g	2.9	ND	U	g
4-Bromophenyl Phenyl Ether	0.02		0.1	ND	U	g	0.8	ND	U	g
Hexachlorobenzene	0.03		0.1	ND	U	g	1.1	ND	U	g
Pentachlorophenol	0.03		0.12	ND	U	g	1.1	ND	U	g
Phenanthrene	0.03		0.1	ND	U	g	1.1	0.9	J	
Anthracene	0.04		0.2	ND	U	g	1.5	ND	U	g
di-n-butyl Phthalate	0.06		0.2	ND	U	g	2.2	ND	U	g
Fluroanthene	0.03		0.1	ND	U	g	1.2	ND	U	g
Pyrene	0.03		0.1	ND	U	g	1.0	ND	U	g
Butylbenzylphthalate	0.02		0.1	ND	U	g	0.8	ND	U	g
3,3'-Dichlorobenzidine	0.06		0.2	ND	U	g	2.0	ND	U	g
Benzo(a)anthracene	0.04		0.1	ND	U	g	1.3	ND	U	g
bis(2-Ethylhexyl) Phthalate	0.04		0.1	ND	U	g	1.4	ND	U	g
Chrysene	0.05		0.2	ND	U	g	1.6	ND	U	g
di-n-Octylphthalate	0.02		0.1	ND	U	g	0.8	ND	U	g
Benzo(b)fluoranthene	0.04		0.2	ND	U	g	1.5	ND	U	g
Benzo(k)fluoranthene	0.07		0.3	ND	U	g	2.6	ND	U	g
Benzo(a)pyrene	0.04		0.1	ND	U	g	1.4	ND	U	g
Indeno(1,2,3-c,d)pyrene	0.03		0.1	ND	U	g	0.9	ND	U	g
Dibenzo(a,h)anthracene	0.02		0.1	ND	U	g	0.8	ND	U	g
Benzo(g,h,i)perylene	0.03		0.1	ND	U	g	1.1	ND	U	g

Base: Kotzebue LRRS
Site: ST05
Extraction Method: EPA Method 3550
Analytical Method: EPA Method 8270
Matrix: Soil
Units: mg/kg

Table 7.2.1.4
Analytical Data Summary
EPA Method 8270

			Environmental Samples							
		Field ID:		ST05-SB17-6.5				ST05-SB20-6.0		
		Batch ID:		H746				H746		
Parameters	MDL		PQL	Result	Validity	Comments	PQL	Result	Validity	Comments
Phenol	0.05		1.9	ND	U	g	0.2	ND	U	g
bis(2-Chloroethyl) Ether	0.04		1.4	ND	U	g	0.1	ND	U	g
2-Chlorophenol	0.07		2.5	ND	U	g	0.2	ND	U	g
1,3-Dichlorobenzene	0.04		1.4	ND	U	g	0.1	ND	U	g
1,4-Dichlorobenzene	0.03		0.9	ND	U	g	0.1	ND	U	g
Benzyl Alcohol	0.05		1.8	ND	U	g	0.2	ND	U	g
1,2-Dichlorobenzene	0.04		1.3	ND	U	g	0.1	ND	U	g
2-Methylphenol	0.10		3.5	ND	U	g	0.3	ND	U	g
2,2'-Oxybis (1-Chloropropane)	0.03		1.2	ND	U	g	0.1	ND	U	g
4-Methylphenol	0.08		2.7	ND	U	g	0.3	ND	U	g
N-Nitrosodi-n-propylamine	0.03		1.0	ND	U	g	0.1	ND	U	g
Hexachloroethane	0.04		1.4	ND	U	g	0.1	ND	U	g
Nitrobenzene	0.02		1.8	ND	U	g	0.1	ND	U	g
Isophorone	0.03		1.2	ND	U	g	0.1	ND	U	g
2-Nitrophenol	0.03		2.0	ND	U	g	0.1	ND	U	g
2,4-Dimethylphenol	0.17		3.3	ND	U	g	0.3	ND	U	g
Benzoic Acid	0.06		2.0	ND	U	g	0.19	ND	U	g
bis(2-Chloroethoxy) Methane	0.04		1.3	ND	U	g	0.1	ND	U	g
2,4-Dichlorophenol	0.04		1.6	ND	U	g	0.2	ND	U	g
1,2,4-Trichlorobenzene	0.03		1.2	ND	U	g	0.1	ND	U	g
Naphthalene	0.04		1.3	12		g	0.1	ND	U	g
4-Chloroaniline	0.10		3.7	ND	U	g	0.3	ND	U	g
Hexachlorobutadiene	0.03		1.2	ND	U	g	0.1	ND	U	g
4-Chloro-3-Methylphenol	0.06		2.1	ND	U	g	0.2	ND	U	g
2-Methylnaphthalene	0.03		1.2	36		g	0.1	0.1	J	
Hexachlorocyclopentadiene	0.03		0.9	ND	U	g	0.1	ND	U	g
2,4,6-Trichlorophenol	0.04		1.5	ND	U	g	0.1	ND	U	g
2,4,5-Trichlorophenol	0.03		0.90	ND	U	g	0.09	ND	U	g
2-Chloronaphthalene	0.03		1.2	ND	U	g	0.1	ND	U	g
2-Nitroaniline	0.02		2.3	ND	U	g	0.06	ND	U	g
Dimethyl Phthalate	0.04		1.3	ND	U	g	0.1	ND	U	g
Acenaphthylene	0.04		1.4	ND	U	g	0.1	ND	U	g
3-Nitroaniline	0.11		3.9	ND	U	g	0.38	ND	U	g
Acenaphthene	0.03		1.1	0.6	J	n	0.1	ND	U	g
2,4-Dinitrophenol	0.09		3.2	ND	U	g	0.30	ND	U	g
4-Nitrophenol	0.07		4.1	ND	U	g	0.22	ND	U	g
Dibenzofuran	0.03		1.1	0.4	J	n	0.1	ND	U	g
2,6-Dinitrotoluene	0.04		1.5	ND	U	g	0.1	ND	U	g

Base: Kotzebue LRRS						Table 7.2.1.4								
Site: ST05						Analytical Data Summary								
Extraction Method: EPA Method 3550						EPA Method 8270								
Analytical Method: EPA Method 8270														
Matrix: Soil														
Units: mg/kg														
			Environmental Samples											
		Field ID:		ST05-SB17-6.5				ST05-SB20-6.0						
		Batch ID:		H746				H746						
Parameters	MDL		PQL	Result	Validity	Comments	PQL	Result	Validity	Comments				
2,4-Dinitrotoluene	0.02		0.8	ND	U	g	0.1	ND	U	g				
Diethyl Phthalate	0.04		1.2	ND	U	g	0.1	ND	U	g				
4-Chlorophenyl Phenyl Ether	0.02		0.8	ND	U	g	0.1	ND	U	g				
Fluorene	0.03		1.1	0.9	J		0.1	ND	U	g				
4-Nitroaniline	0.13		4.7	ND	U	g	0.45	ND	U	g				
4,6-Dinitro-2-Methylphenol	0.09		3.2	ND	U	g	0.30	ND	U	g				
N-Nitrosodiphenylamine	0.08		3.0	ND	U	g	0.3	ND	U	g				
4-Bromophenyl Phenyl Ether	0.02		0.8	ND	U	g	0.1	ND	U	g				
Hexachlorobenzene	0.03		1.2	ND	U	g	0.1	ND	U	g				
Pentachlorophenol	0.03		1.2	ND	U	g	0.11	ND	U	g				
Phenanthrene	0.03		1.2	0.5	J		0.1	ND	U	g				
Anthracene	0.04		1.6	ND	U	g	0.1	ND	U	g				
di-n-butyl Phthalate	0.06		2.2	ND	U	g	0.2	ND	U	g				
Fluroanthene	0.03		1.2	ND	U	g	0.1	ND	U	g				
Pyrene	0.03		1.0	ND	U	g	0.1	ND	U	g				
Butylbenzylphthalate	0.02		0.8	ND	U	g	0.1	ND	U	g				
3,3'-Dichlorobenzidine	0.06		2.1	ND	U	g	0.2	ND	U	g				
Benzo(a)anthracene	0.04		1.4	ND	U	g	0.1	ND	U	g				
bis(2-Ethylhexyl) Phthalate	0.04		1.4	ND	U	g	0.1	ND	U	g				
Chrysene	0.05		1.6	ND	U	g	0.2	ND	U	g				
di-n-Octylphthalate	0.02		0.8	ND	U	g	0.1	ND	U	g				
Benzo(b)fluoranthene	0.04		1.5	ND	U	g	0.1	ND	U	g				
Benzo(k)fluoranthene	0.07		2.7	ND	U	g	0.3	ND	U	g				
Benzo(a)pyrene	0.04		1.4	ND	U	g	0.1	ND	U	g				
Indeno(1,2,3-c,d)pyrene	0.03		1.0	ND	U	g	0.1	ND	U	g				
Dibenzo(a,h)anthracene	0.02		0.8	ND	U	g	0.1	ND	U	g				
Benzo(g,h,i)perylene	0.03		1.1	ND	U	g	0.1	ND	U	g				

Base: Kotzebue LRRS						Table 2.1.5							
Site: ST5						Analytical Data Summary							
Extraction Method: Not Applicable						EPA Method 9060							
Analytical Method: EPA Method 9060													
Matrix: Soil													
Units: mg/L													
			Environmental Samples										
		Field ID:		ST05-GT7-B-1.0									
		Batch ID:		H671									
Parameters	MDL		PQL	Result	Validity	Comments							
Total Organic Carbon	158		560	24100		g							

Base: Kotzebue LRRS						Table 2.2.1								
Site: ST5						Analytical Data Summary								
Extraction Method: EPA Method 3510						Method AK102								
Analytical Method: Method AK102														
Matrix: Water														
Units: mg/L														
			Environmental Samples											
		Field ID:		ST05-SW1-01				ST05-SW2-01				ST05-SW3-01		
		Batch ID:		H718				H718				H718		
Parameters	MDL		PQL	Result	Validity	Comments	PQL	Result	Validity	Comments	PQL	Result	Validity	Comments
Diesel Hydrocarbons	0.06		0.11	ND	U	g	0.11	ND	U	g	0.11	ND	U	g

Base: Kotzebue LRRS						Table 2.2.1							
Site: ST5						Analytical Data Summary							
Extraction Method: EPA Method 3510						Method AK102							
Analytical Method: Method AK102													
Matrix: Water													
Units: mg/L													
			Environmental Samples										
		Field ID:		ST05-SW4-01									
		Batch ID:		H718									
Parameters	MDL		PQL	Result	Validity	Comments							
Diesel Hydrocarbons	0.06		0.11	ND	U	g							

Base: Kotzebue LRRS						Table 2.2.1								
Site: ST5						Analytical Data Summary								
Extraction Method: EPA Method 3510						Method AK102								
Analytical Method: Method AK102														
Matrix: Water														
Units: mg/L														
			Environmental Samples											
		Field ID:		ST05-MW1-01				ST05-MW10-01				ST05-MW2-01		
		Batch ID:		H785				H785				H785		
Parameters	MDL		PQL	Result	Validity	Comments	PQL	Result	Validity	Comments	PQL	Result	Validity	Comments
Diesel Hydrocarbons	0.06		0.11	ND	U	g	0.11	ND	U	g	0.11	4.7		g

Base: Kotzebue LRRS						Table 2.2.1								
Site: ST5						Analytical Data Summary								
Extraction Method: EPA Method 3510						Method AK102								
Analytical Method: Method AK102														
Matrix: Water														
Units: mg/L														
			Environmental Samples											
		Field ID:		ST05-MW4-01				ST05-MW5-01				ST05-MW6-01		
		Batch ID:		H785				H785				H785		
Parameters	MDL		PQL	Result	Validity	Comments	PQL	Result	Validity	Comments	PQL	Result	Validity	Comments
Diesel Hydrocarbons	0.06		0.11	ND	U	g	0.11	2.2		g	0.11	16 E*	J	n
* Analyte detected above linear calibration range.														

Base: Kotzebue LRRS						Table 2.2.1							
Site: ST5						Analytical Data Summary							
Extraction Method: EPA Method 3510						Method AK102							
Analytical Method: Method AK102													
Matrix: Water													
Units: mg/L													
			Environmental Samples										
		Field ID:	ST05-MW6-01DL										
		Batch ID:	H785										
Parameters	MDL		PQL	Result	Validity	Comments							
				Dilution 10									
Diesel Hydrocarbons	0.06		1.1	14		g							

Base: Kotzebue LRRS						Table 2.2.1								
Site: ST5						Analytical Data Summary								
Extraction Method: EPA Method 3510						Method AK102								
Analytical Method: Method AK102														
Matrix: Water														
Units: mg/L														
			Environmental Samples											
		Field ID:		ST05-MW3-01				ST05-MW7-01				ST05-MW8-01		
		Batch ID:		H792				H792				H792		
Parameters	MDL		PQL	Result	Validity	Comments	PQL	Result	Validity	Comments	PQL	Result	Validity	Comments
Diesel Hydrocarbons	0.06		0.11	5.1	J	c	0.11	0.22	J	c	0.11	18 E*	J	c,n
* Analyte detected above linear calibration range.														

Base: Kotzebue LRRS
Site: ST5
Extraction Method: EPA Method 3520
Analytical Method: EPA Method 8270
Matrix: Water
Units: ug/L

Table 2.2.4
Analytical Data Summary
EPA Method 8270

			Environmental Samples											
		Field ID:		ST05-MW4-01				ST05-MW5-01				ST05-MW6-01		
		Batch ID:		H785				H785				H785		
Parameters	MDL		PQL	Result	Validity	Comments	PQL	Result	Validity	Comments	PQL	Result	Validity	Comments
Phenol	0.9		3	ND	U	g	3	ND	U	g	3	ND	U	g
bis(2-Chloroethyl) Ether	1.9		6	ND	U	g	6	ND	U	g	6	ND	U	g
2-Chlorophenol	0.2		1	ND	U	g	1	ND	U	g	1	ND	U	g
1,3-Dichlorobenzene	0.3		1	1		g	1	1	J	n	1	1	J	n
1,4-Dichlorobenzene	0.3		1	ND	U	g	1	ND	U	g	1	ND	U	g
Benzyl Alcohol	0.7		2	ND	U	g	2	ND	U	g	2	ND	U	g
1,2-Dichlorobenzene	0.2		1	ND	U	g	1	ND	U	g	1	ND	U	g
2-Methylphenol	0.2		1	ND	U	g	1	ND	U	g	1	ND	U	g
2,2'-Oxybis (1-Chloropropane)	0.2		1	ND	U	g	1	ND	U	g	1	ND	U	g
4-Methylphenol	0.6		2	ND	U	g	2	ND	U	g	2	ND	U	g
N-Nitrosodi-n-propylamine	1.3		4	ND	U	g	4	ND	U	g	4	ND	U	g
Hexachloroethane	0.6		2	ND	U	g	2	ND	U	g	2	ND	U	g
Nitrobenzene	0.3		1	ND	U	g	1	ND	U	g	1	7*		g
Isophorone	0.5		2	ND	U	g	2	ND	U	g	2	ND	U	g
2-Nitrophenol	0.5		2	ND	U	g	2	ND	U	g	2	3*		g
2,4-Dimethylphenol	2.6		8	ND	U	g	8	ND	U	g	8	ND	U	g
Benzoic Acid	3.1		10	ND	U	g	10	ND	U	g	10	ND	U	g
bis(2-Chloroethoxy) Methane	0.5		2	ND	U	g	2	ND	U	g	2	3*		g
2,4-Dichlorophenol	1.0		3	ND	U	g	3	ND	U	g	3	ND	U	g
1,2,4-Trichlorobenzene	0.2		1	ND	U	g	1	ND	U	g	1	ND	U	g
Naphthalene	0.2		1	ND	U	g	1	9	J	n	1	220 E**	J	n
4-Chloroaniline	2.0		6	ND	U	g	6	ND	U	g	6	ND	U	g
Hexachlorobutadiene	0.7		2	ND	U	g	2	ND	U	g	2	ND	U	g
4-Chloro-3-Methylphenol	1.1		3	ND	U	g	3	ND	U	g	3	ND	U	g
2-Methylnaphthalene	0.6		2	ND	U	g	2	30		g	2	170 E**	J	n
Hexachlorocyclopentadiene	2.9		9	ND	U	g	9	ND	U	g	9	ND	U	g
2,4,6-Trichlorophenol	1.5		5	ND	U	g	5	ND	U	g	5	ND	U	g
2,4,5-Trichlorophenol	1.3		4	ND	U	g	4	ND	U	g	4	ND	U	g
2-Chloronaphthalene	0.5		2	ND	U	g	2	ND	U	g	2	ND	U	g
2-Nitroaniline	1.3		4	ND	U	g	4	ND	U	g	4	7*		g
Dimethyl Phthalate	0.7		2	ND	U	g	2	ND	U	g	2	ND	U	g
Acenaphthylene	0.6		2	ND	U	g	2	ND	U	g	2	2	J	n
3-Nitroaniline	5.4		20	ND	U	g	20	ND	U	g	20	ND	U	g
Acenaphthene	0.6		2	ND	U	g	2	ND	U	g	2	2	J	n
2,4-Dinitrophenol	8.4		30	ND	U	g	30	ND	U	g	30	ND	U	g
4-Nitrophenol	1.6		5	ND	U	g	5	ND	U	g	5	13*		g
Dibenzofuran	0.6		2	ND	U	g	2	ND	U	g	2	1	J	n
2,6-Dinitrotoluene	1.5		5	ND	U	g	5	ND	U	g	5	ND	U	g

* In the opinion of the analyst, the relevant compound may not be present at or below the indicated concentration due to interfering background contamination that prevents a positive or negative spectral confirmation.
** Analyte detected above linear calibration range.

Base: Kotzebue LRRS						Table 2.2.2									
Site: ST5						Analytical Data Summary									
Extraction Method: EPA Method 3010 (unfiltered)/3005 (filtered)						EPA Method 6010									
Analytical Method: EPA Method 6010															
Matrix: Water															
Units: mg/L															
			Environmental Samples												
		Field ID:		ST05-MW2-01				ST05-MW4-01				ST05-MW5-01			
		Batch ID:		H785				H785				H785			
Parameters	MDL		PQL	Result	Validity	Comments	PQL	Result	Validity	Comments	PQL	Result	Validity	Comments	
Calcium	0.02		0.07	130	J	c	0.07	68	J	c	0.07	94	J	c	
Iron	0.006		0.02	41		g	0.02	3.4		g	0.02	16		g	
Magnesium	0.01		0.04	34		g	0.04	12		g	0.04	22		g	
Potassium	0.2		0.5	4.8		g	0.5	1.1		g	0.5	3.1		g	
Sodium	0.07		0.2	20		g	0.2	4.0		g	0.2	18		g	

Base: Kotzebue LRRS						Table 2.2.2										
Site: ST5						Analytical Data Summary										
Extraction Method: EPA Method 3010 (unfiltered)/3005 (filtered)						EPA Method 6010										
Analytical Method: EPA Method 6010																
Matrix: Water																
Units: mg/L																
			Environmental Samples													
		Field ID:		ST05-MW6-01												
		Batch ID:		H785												
Parameters	MDL		PQL	Result	Validity	Comments										
Calcium	0.02		0.07	81	J	c										
Iron	0.006		0.02	16		g										
Magnesium	0.01		0.04	55		g										
Potassium	0.2		0.5	21		g										
Sodium	0.07		0.2	560		g										

Base: Kotzebue LRRS						Table 2.2.2									
Site: ST5						Analytical Data Summary									
Extraction Method: EPA Method 3010 (unfiltered)/3005 (filtered)						EPA Method 6010									
Analytical Method: EPA Method 6010															
Matrix: Water															
Units: mg/L															
			Environmental Samples												
		Field ID:		ST05-MW3-01				ST05-MW7-01				ST05-MW8-01			
		Batch ID:		H792				H792				H792			
Parameters	MDL		PQL	Result	Validity	Comments	PQL	Result	Validity	Comments	PQL	Result	Validity	Comments	
Calcium	0.02		0.07	100		k	0.07	110		k	0.07	120		k	
Iron	0.006		0.02	2.2		g	0.02	6.6		g	0.02	14		g	
Magnesium	0.01		0.04	12		g	0.04	20		g	0.04	43		g	
Potassium	0.2		0.5	3.3		k	0.5	1.4	B	k	0.5	11		k	
Sodium	0.07		0.2	5.3		k	0.2	7.6		k	0.2	180		k	

Base: Kotzebue LRRS						Table 2.2.2										
Site: ST5						Analytical Data Summary										
Extraction Method: EPA Method 3010 (unfiltered)/3005 (filtered)						EPA Method 6010										
Analytical Method: EPA Method 6010																
Matrix: Water																
Units: mg/L																
			Environmental Samples													
		Field ID:		ST05-MW9-01												
		Batch ID:		H792												
Parameters	MDL		PQL	Result	Validity	Comments										
Calcium	0.02		0.07	82		k										
Iron	0.006		0.02	10		g										
Magnesium	0.01		0.04	19		g										
Potassium	0.2		0.5	7.8		k										
Sodium	0.07		0.2	48		k										

Base: Kotzebue LRRS
Site: ST5
Extraction Method: EPA Method 8260
Analytical Method: EPA Method 8260
Matrix: Water
Units: ug/L

Table 2.2.3
Analytical Data Summary
EPA Method 8260

			Environmental Samples											
		Field ID:		ST05-SW1-01				ST05-SW2-01				ST05-SW3-01		
		Batch ID:		H718				H718				H718		
Parameters	MDL		PQL	Result	Validity	Comments	PQL	Result	Validity	Comments	PQL	Result	Validity	Comments
Chloromethane	1.03		3	ND	U	g	3	ND	U	g	3	ND	U	g
Bromomethane	0.42		2	ND	U	g	2	ND	U	g	2	ND	U	g
Vinyl Chloride	0.52		2	ND	U	g	2	ND	U	g	2	ND	U	g
Chloroethane	0.59		2	ND	U	g	2	ND	U	g	2	ND	U	g
Methylene Chloride	0.41		1	ND	U	g	1	ND	U	g	1	ND	U	g
Acetone	2.90		9	ND	U	g	9	ND	U	g	9	ND	U	g
Carbon Disulfide	0.40		2	ND	U	g	2	ND	U	g	2	ND	U	g
1,1-Dichloroethene	0.71		2	ND	U	g	2	ND	U	g	2	ND	U	g
1,1-Dichloroethane	0.50		2	ND	U	g	2	ND	U	g	2	ND	U	g
trans-1,2-Dichloroethene	0.42		1	ND	U	g	1	ND	U	g	1	ND	U	g
cis-1,2-Dichloroethylene	0.43		2	ND	U	g	2	ND	U	g	2	ND	U	g
Chloroform	0.26		1	ND	U	g	1	ND	U	g	1	ND	U	g
1,2-Dichloroethane	0.71		2	ND	U	g	2	ND	U	g	2	ND	U	g
Methyl Ethyl Ketone (2-butanone)	0.52		2	ND	U	g	2	ND	U	g	2	ND	U	g
1,1,1-Trichloroethane	0.54		2	ND	U	g	2	ND	U	g	2	ND	U	g
Carbon Tetrachloride	0.42		2	ND	U	g	2	ND	U	g	2	ND	U	g
Vinyl Acetate	0.52		2	ND	U	g	2	ND	U	g	2	ND	U	g
Bromodichloromethane	0.42		2	ND	U	g	2	ND	U	g	2	ND	U	g
1,2-Dichloropropane	0.48		2	ND	U	g	2	ND	U	g	2	ND	U	g
cis-1,3-Dichloropropene	0.38		1	ND	U	g	1	ND	U	g	1	ND	U	g
Trichloroethylene (tce)	0.18		1	ND	U	g	1	ND	U	g	1	ND	U	g
Dibromochloromethane	0.20		1	ND	U	g	1	ND	U	g	1	ND	U	g
1,1,2-Trichloroethane	0.42		1	ND	U	g	1	ND	U	g	1	ND	U	g
Benzene	0.42		2	ND	U	g	2	ND	U	g	2	ND	U	g

Base: Kotzebue LRRS
Site: ST5
Extraction Method: EPA Method 8260
Analytical Method: EPA Method 8260
Matrix: Water
Units: ug/L

Table 2.2.3
Analytical Data Summary
EPA Method 8260

			Environmental Samples											
		Field ID:		ST05-SW1-01				ST05-SW2-01				ST05-SW3-01		
		Batch ID:		H718				H718				H718		
Parameters	MDL		PQL	Result	Validity	Comments	PQL	Result	Validity	Comments	PQL	Result	Validity	Comments
trans-1,3-Dichloropropene	0.48		2	ND	U	g	2	ND	U	g	2	ND	U	g
2-Chloroethyl Vinyl Ether	0.82		3	ND	U	g	3	ND	U	g	3	ND	U	g
Bromoform	0.48		2	ND	U	g	2	ND	U	g	2	ND	U	g
Methyl Isobutyl Ketone	1.22		4	ND	U	g	4	ND	U	g	4	ND	U	g
2-Hexanone	0.72		2	ND	U	g	2	ND	U	g	2	ND	U	g
Tetrachloroethylene (pce)	0.30		1	ND	U	g	1	ND	U	g	1	ND	U	g
1,1,2,2-Tetrachloroethane	0.56		2	ND	U	g	2	ND	U	g	2	ND	U	g
Toluene	0.46		2	ND	U	g	2	ND	U	g	2	ND	U	g
Chlorobenzene	0.20		1	ND	U	g	1	ND	U	g	1	ND	U	g
Ethylbenzene	0.28		1	ND	U	g	1	ND	U	g	1	ND	U	g
Styrene	0.08		1	ND	U	g	1	ND	U	g	1	ND	U	g
1,1,2-Trichloro-1,2,2-trifluoroethane	0.37		1	ND	U	g	1	ND	U	g	1	ND	U	g
Xylenes, total	0.68		2	ND	U	g	2	ND	U	g	2	ND	U	g
1,1,1,2-Tetrachloroethane	0.46		2	ND	U	g	2	ND	U	g	2	ND	U	g
1,2,3-Trichloropropane	0.41		1	ND	U	g	1	ND	U	g	1	ND	U	g
Bromochloromethane	0.24		1	ND	U	g	1	ND	U	g	1	ND	U	g
1-Chlorohexane	1.68		5	ND	U	g	5	ND	U	g	5	ND	U	g
Bromobenzene	0.43		2	ND	U	g	2	ND	U	g	2	ND	U	g

Base: Kotzebue LRRS
Site: ST5
Extraction Method: EPA Method 8260
Analytical Method: EPA Method 8260
Matrix: Water
Units: ug/L

Table 2.2.3
Analytical Data Summary
EPA Method 8260

		Environmental Samples		
	Field ID:		ST05-SW4-01	
	Batch ID:		H718	
Parameters	MDL	PQL	Result	Validity	Comments
Chloromethane	1.03	3	ND	U	g
Bromomethane	0.42	2	ND	U	g
Vinyl Chloride	0.52	2	ND	U	g
Chloroethane	0.59	2	ND	U	g
Methylene Chloride	0.41	1	ND	U	g
Acetone	2.90	9	ND	U	g
Carbon Disulfide	0.40	2	ND	U	g
1,1-Dichloroethene	0.71	2	ND	U	g
1,1-Dichloroethane	0.50	2	ND	U	g
trans-1,2-Dichloroethene	0.42	1	ND	U	g
cis-1,2-Dichloroethylene	0.43	2	ND	U	g
Chloroform	0.26	1	ND	U	g
1,2-Dichloroethane	0.71	2	ND	U	g
Methyl Ethyl Ketone (2-butanone)	0.52	2	ND	U	g
1,1,1-Trichloroethane	0.54	2	ND	U	g
Carbon Tetrachloride	0.42	2	ND	U	g
Vinyl Acetate	0.52	2	ND	U	g
Bromodichloromethane	0.42	2	ND	U	g
1,2-Dichloropropane	0.48	2	ND	U	g
cis-1,3-Dichloropropene	0.38	1	ND	U	g
Trichloroethylene (tce)	0.18	1	ND	U	g
Dibromochloromethane	0.20	1	ND	U	g
1,1,2-Trichloroethane	0.42	1	ND	U	g
Benzene	0.42	2	ND	U	g

Base: Kotzebue LRRS						Table 2.2.3							
Site: ST5						Analytical Data Summary							
Extraction Method: EPA Method 8260						EPA Method 8260							
Analytical Method: EPA Method 8260													
Matrix: Water													
Units: ug/L													
			Environmental Samples										
		Field ID:		ST05-SW4-01									
		Batch ID:		H718									
Parameters	MDL		PQL	Result	Validity	Comments							
trans-1,3-Dichloropropene	0.48		2	ND	U	g							
2-Chloroethyl Vinyl Ether	0.82		3	ND	U	g							
Bromoform	0.48		2	ND	U	g							
Methyl Isobutyl Ketone	1.22		4	ND	U	g							
2-Hexanone	0.72		2	ND	U	g							
Tetrachloroethylene (pce)	0.30		1	ND	U	g							
1,1,2,2-Tetrachloroethane	0.56		2	ND	U	g							
Toluene	0.46		2	ND	U	g							
Chlorobenzene	0.20		1	ND	U	g							
Ethylbenzene	0.28		1	ND	U	g							
Styrene	0.08		1	ND	U	g							
1,1,2-Trichloro-1,2,2-trifluoroethane	0.37		1	ND	U	g							
Xylenes, total	0.68		2	ND	U	g							
1,1,1,2-Tetrachloroethane	0.46		2	ND	U	g							
1,2,3-Trichloropropane	0.41		1	ND	U	g							
Bromochloromethane	0.24		1	ND	U	g							
1-Chlorohexane	1.68		5	ND	U	g							
Bromobenzene	0.43		2	ND	U	g							

Base: Kotzebue LRRS
Site: ST5
Extraction Method: EPA Method 8260
Analytical Method: EPA Method 8260
Matrix: Water
Units: ug/L

Table 2.2.3
Analytical Data Summary
EPA Method 8260

			Environmental Samples											
		Field ID:		ST05-MW1-01				ST05-MW10-01				ST05-MW2-01		
		Batch ID:		H785				H785				H785		
Parameters	MDL		PQL	Result	Validity	Comments	PQL	Result	Validity	Comments	PQL	Result	Validity	Comments
Chloromethane	1.03		3	ND	U	g	3	ND	U	g	3	ND	U	g
Bromomethane	0.42		2	ND	U	g	2	ND	U	g	2	ND	U	g
Vinyl Chloride	0.52		2	ND	U	g	2	ND	U	g	2	ND	U	g
Chloroethane	0.59		2	ND	U	g	2	ND	U	g	2	ND	U	g
Methylene Chloride	0.41		1	ND	U	g	1	ND	U	g	1	ND	U	g
Acetone	2.90		9	ND	U	g	9	ND	U	g	9	ND	U	g
Carbon Disulfide	0.40		2	ND	U	g	2	ND	U	g	2	ND	U	g
1,1-Dichloroethene	0.71		2	ND	U	g	2	ND	U	g	2	ND	U	g
1,1-Dichloroethane	0.50		2	ND	U	g	2	ND	U	g	2	ND	U	g
trans-1,2-Dichloroethene	0.42		1	ND	U	g	1	ND		g	1	ND	U	g
cis-1,2-Dichloroethylene	0.43		2	ND	U	g	2	ND	U	g	2	ND	U	g
Chloroform	0.26		1	ND	U	g	1	ND	U	g	1	ND	U	g
1,2-Dichloroethane	0.71		2	ND	U	g	2	ND	U	g	2	ND	U	g
Methyl Ethyl Ketone (2-butanone)	0.52		2	ND	U	g	2	ND	U	g	2	ND	U	g
1,1,1-Trichloroethane	0.54		2	ND	U	g	2	ND	U	g	2	ND	U	g
Carbon Tetrachloride	0.42		2	ND	U	g	2	ND	U	g	2	ND	U	g
Vinyl Acetate	0.52		2	ND	U	g	2	ND	U	g	2	ND	U	g
Bromodichloromethane	0.42		2	ND	U	g	2	ND	U	g	2	ND	U	g
1,2-Dichloropropane	0.48		2	ND	U	g	2	ND	U	g	2	ND	U	g
cis-1,3-Dichloropropene	0.38		1	ND	U	g	1	ND	U	g	1	ND	U	g
Trichloroethylene (tce)	0.18		1	ND	U	g	1	ND	U	g	1	ND	U	g
Dibromochloromethane	0.20		1	ND	U	g	1	ND	U	g	1	ND	U	g
1,1,2-Trichloroethane	0.42		1	ND	U	g	1	ND	U	g	1	ND	U	g
Benzene	0.42		2	ND	U	g	2	ND	U	g	2	1		g

Base: Kotzebue LRRS						Table 2.2.3								
Site: ST5						Analytical Data Summary								
Extraction Method: EPA Method 8260						EPA Method 8260								
Analytical Method: EPA Method 8260														
Matrix: Water														
Units: ug/L														
			Environmental Samples											
		Field ID:		ST05-MW1-01				ST05-MW10-01				ST05-MW2-01		
		Batch ID:		H785				H785				H785		
Parameters	MDL		PQL	Result	Validity	Comments	PQL	Result	Validity	Comments	PQL	Result	Validity	Comments
trans-1,3-Dichloropropene	0.48		2	ND	U	g	2	ND	U	g	2	ND	U	g
2-Chloroethyl Vinyl Ether	0.82		3	ND	U	g	3	ND	U	g	3	ND	U	g
Bromoform	0.48		2	ND	U	g	2	ND	U	g	2	ND	U	g
Methyl Isobutyl Ketone	1.22		4	ND	U	g	4	ND	U	g	4	ND	U	g
2-Hexanone	0.72		2	ND	U	g	2	ND	U	g	2	ND	U	g
Tetrachloroethylene (pce)	0.30		1	ND	U	g	1	ND	U	g	1	ND	U	g
1,1,2,2-Tetrachloroethane	0.56		2	ND	U	g	2	ND	U	g	2	ND	U	g
Toluene	0.46		2	ND	U	g	2	ND	U	g	2	ND	U	g
Chlorobenzene	0.20		1	ND	U	g	1	ND	U	g	1	ND	U	g
Ethylbenzene	0.28		1	ND	U	g	1	ND	U	g	1	80	J	n
Styrene	0.08		1	ND	U	g	1	ND	U	g	1	ND	U	g
1,1,2-Trichloro-1,2,2-trifluoroethane	0.37		1	ND	U	g	1	ND	U	g	1	ND	U	g
Xylenes, total	0.68		2	ND	U	g	2	ND	U	g	2	330	J	n
1,1,1,2-Tetrachloroethane	0.46		2	ND	U	g	2	ND	U	g	2	ND	U	g
1,2,3-Trichloropropane	0.41		1	ND	U	g	1	ND	U	g	1	ND	U	g
Bromochloromethane	0.24		1	ND	U	g	1	ND	U	g	1	ND	U	g
1-Chlorohexane	1.68		5	ND	U	g	5	ND	U	g	5	ND	U	g
Bromobenzene	0.43		2	ND	U	g	2	ND	U	g	2	ND	U	g

Base: Kotzebue LRRS						Table 2.2.3								
Site: ST5						Analytical Data Summary								
Extraction Method: EPA Method 8260						EPA Method 8260								
Analytical Method: EPA Method 8260														
Matrix: Water														
Units: ug/L														
			Environmental Samples											
		Field ID:	ST05-MW2-01DL					ST05-MW4-01				ST05-MW5-01		
		Batch ID:	H785					H785				H785		
Parameters	MDL		PQL	Result	Validity	Comments	PQL	Result	Validity	Comments	PQL	Result	Validity	Comments
				Dilution 5										
Chloromethane	1.03		16	ND	U	g	3	ND	U	g	3	ND	U	g
Bromomethane	0.42		8	ND	U	g	2	ND	U	g	2	ND	U	g
Vinyl Chloride	0.52		8	ND	U	g	2	ND	U	g	2	ND	U	g
Chloroethane	0.59		9	ND	U	g	2	ND	U	g	2	ND	U	g
Methylene Chloride	0.41		7	ND	U	g	1	ND	U	g	1	ND	U	g
Acetone	2.90		46	ND	U	g	9	ND	U	g	9	ND	U	g
Carbon Disulfide	0.40		8	ND	U	g	2	ND	U	g	2	ND	U	g
1,1-Dichloroethene	0.71		11	ND	U	g	2	ND	U	g	2	ND	U	g
1,1-Dichloroethane	0.50		8	ND	U	g	2	ND	U	g	2	ND	U	g
trans-1,2-Dichloroethene	0.42		7	ND	U	g	1	ND	U	g	1	ND	U	g
cis-1,2-Dichloroethylene	0.43		8	ND	U	g	2	ND	U	g	2	ND	U	g
Chloroform	0.26		4	ND	U	g	1	ND	U	g	1	ND	U	g
1,2-Dichloroethane	0.71		11	ND	U	g	2	ND	U	g	2	ND	U	g
Methyl Ethyl Ketone (2-butanone)	0.52		8	ND	U	g	2	ND	U	g	2	ND	U	g
1,1,1-Trichloroethane	0.54		9	ND	U	g	2	ND	U	g	2	ND	U	g
Carbon Tetrachloride	0.42		8	ND	U	g	2	ND	U	g	2	ND	U	g
Vinyl Acetate	0.52		8	ND	U	g	2	ND	U	g	2	ND	U	g
Bromodichloromethane	0.42		8	ND	U	g	2	ND	U	g	2	ND	U	g
1,2-Dichloropropane	0.48		8	ND	U	g	2	ND	U	g	2	ND	U	g
cis-1,3-Dichloropropene	0.38		6	ND	U	g	1	ND	U	g	1	ND	U	g
Trichloroethylene (tce)	0.18		3	ND	U	g	1	ND	U	g	1	ND	U	g
Dibromochloromethane	0.20		4	ND	U	g	1	ND	U	g	1	ND	U	g
1,1,2-Trichloroethane	0.42		7	ND	U	g	1	ND	U	g	1	ND	U	g
Benzene	0.42		8	ND	U	g	2	ND	U	g	2	ND	U	g

Base: Kotzebue LRRS

Site: ST5

Extraction Method: EPA Method 8260

Analytical Method: EPA Method 8260

Matrix: Water

Units: ug/L

Table 2.2.3
Analytical Data Summary
EPA Method 8260

Environmental Samples

		Field ID:	ST05-MW2-01DL					ST05-MW4-01				ST05-MW5-01			
		Batch ID:		H785				H785				H785			
Parameters	MDL		PQL	Result	Validity	Comments	PQL	Result	Validity	Comments	PQL	Result	Validity	Comments
				Dilution 5										
trans-1,3-Dichloropropene	0.48		8	ND	U	g	2	ND	U	g	2	ND	U	g
2-Chloroethyl Vinyl Ether	0.82		13	ND	U	g	3	ND	U	g	3	ND	U	g
Bromoform	0.48		8	ND	U	g	2	ND	U	g	2	ND	U	g
Methyl Isobutyl Ketone	1.22		19	ND	U	g	4	ND	U	g	4	ND	U	g
2-Hexanone	0.72		11	ND	U	g	2	ND	U	g	2	ND	U	g
Tetrachloroethylene (pce)	0.30		5	ND	U	g	1	ND	U	g	1	ND	U	g
1,1,2,2-Tetrachloroethane	0.56		9	ND	U	g	2	ND	U	g	2	ND	U	g
Toluene	0.46		8	ND	U	g	2	ND	U	g	2	ND	U	g
Chlorobenzene	0.20		3	ND	U	g	1	ND	U	g	1	ND	U	g
Ethylbenzene	0.28		4	67	J	n	1	ND	U	g	1	ND	U	g
Styrene	0.08		5	ND	U	g	1	ND	U	g	1	ND	U	g
1,1,2-Trichloro-1,2,2-trifluoroethane	0.37		6	ND	U	g	1	ND	U	g	1	ND	U	g
Xylenes, total	0.68		11	320	J	n	2	ND	U	g	2	ND	U	g
1,1,1,2-Tetrachloroethane	0.46		8	ND	U	g	2	ND	U	g	2	ND	U	g
1,2,3-Trichloropropane	0.41		7	ND	U	g	1	ND	U	g	1	ND	U	g
Bromochloromethane	0.24		3	ND	U	g	1	ND	U	g	1	ND	U	g
1-Chlorohexane	1.68		27	ND	U	g	5	ND	U	g	5	ND	U	g
Bromobenzene	0.43		8	ND	U	g	2	ND	U	g	2	ND	U	g

Base: Kotzebue LRRS						Table 2.2.3							
Site: ST5						Analytical Data Summary							
Extraction Method: EPA Method 8260						EPA Method 8260							
Analytical Method: EPA Method 8260													
Matrix: Water													
Units: ug/L													
			Environmental Samples										
		Field ID:		ST05-MW6-01									
		Batch ID:		H785									
Parameters	MDL		PQL	Result	Validity	Comments							
				Dilution 10									
Chloromethane	1.03		33	ND	U	g							
Bromomethane	0.42		15	ND	U	g							
Vinyl Chloride	0.52		17	ND	U	g							
Chloroethane	0.59		19	ND	U	g							
Methylene Chloride	0.41		13	ND	U	g							
Acetone	2.90		92	ND	U	g							
Carbon Disulfide	0.40		15	ND	U	g							
1,1-Dichloroethene	0.71		23	ND	U	g							
1,1-Dichloroethane	0.50		16	ND	U	g							
trans-1,2-Dichloroethene	0.42		13	ND	U	g							
cis-1,2-Dichloroethylene	0.43		15	ND	U	g							
Chloroform	0.26		8	ND	U	g							
1,2-Dichloroethane	0.71		22	ND	U	g							
Methyl Ethyl Ketone (2-butanone)	0.52		17	ND	U	g							
1,1,1-Trichloroethane	0.54		17	ND	U	g							
Carbon Tetrachloride	0.42		15	ND	U	g							
Vinyl Acetate	0.52		17	ND	U	g							
Bromodichloromethane	0.42		15	ND	U	g							
1,2-Dichloropropane	0.48		15	ND	U	g							
cis-1,3-Dichloropropene	0.38		12	ND	U	g							
Trichloroethylene (tce)	0.18		6	ND	U	g							
Dibromochloromethane	0.20		8	ND	U	g							
1,1,2-Trichloroethane	0.42		13	ND	U	g							
Benzene	0.42		15	9	J								

Base: Kotzebue LRRS						Table 2.2.3						
Site: ST5						Analytical Data Summary						
Extraction Method: EPA Method 8260						EPA Method 8260						
Analytical Method: EPA Method 8260												
Matrix: Water												
Units: ug/L												
			Environmental Samples									
		Field ID:		ST05-MW6-01								
		Batch ID:		H785								
Parameters	MDL		PQL	Result	Validity	Comments						
				Dilution 10								
trans-1,3-Dichloropropene	0.48		15	ND	U	g						
2-Chloroethyl Vinyl Ether	0.82		26	ND	U	g						
Bromoform	0.48		15	ND	U	g						
Methyl Isobutyl Ketone	1.22		39	ND	U	g						
2-Hexanone	0.72		23	ND	U	g						
Tetrachloroethylene (pce)	0.30		10	ND	U	g						
1,1,2,2-Tetrachloroethane	0.56		18	ND	U	g						
Toluene	0.46		15	15		g						
Chlorobenzene	0.20		6	ND	U	g						
Ethylbenzene	0.28		9	38		g						
Styrene	0.08		10	ND	U	g						
1,1,2-Trichloro-1,2,2-trifluoroethane	0.37		12	ND	U	g						
Xylenes, total	0.68		22	430	J	n						
1,1,1,2-Tetrachloroethane	0.46		15	ND	U	g						
1,2,3-Trichloropropane	0.41		13	ND	U	g						
Bromochloromethane	0.24		7	ND	U	g						
1-Chlorohexane	1.68		53	ND	U	g						
Bromobenzene	0.43		15	ND	U	g						

Base: Kotzebue LRRS						Table 2.2.3								
Site: ST5						Analytical Data Summary								
Extraction Method: EPA Method 8260						EPA Method 8260								
Analytical Method: EPA Method 8260														
Matrix: Water														
Units: ug/L														
			Environmental Samples											
		Field ID:		ST05-MW3-01				ST05-MW7-01				ST05-MW8-01		
		Batch ID:		H792				H792				H792		
Parameters	MDL		PQL	Result	Validity	Comments	PQL	Result	Validity	Comments	PQL	Result	Validity	Comments
Chloromethane	1.03		3	ND	U	g	3	ND	U	g	3	ND	U	g
Bromomethane	0.42		2	ND	U	g	2	ND	U	g	2	ND	U	g
Vinyl Chloride	0.52		2	ND	U	g	2	ND	U	g	2	ND	U	g
Chloroethane	0.59		2	ND	U	g	2	ND	U	g	2	ND	U	g
Methylene Chloride	0.41		1	ND	U	g	1	ND	U	g	1	ND	U	g
Acetone	2.90		9	ND	U	g	9	ND	U	g	9	ND	U	g
Carbon Disulfide	0.40		2	ND	U	g	2	ND	U	g	2	1	J	
1,1-Dichloroethene	0.71		2	ND	U	g	2	ND	U	g	2	ND	U	g
1,1-Dichloroethane	0.50		2	ND	U	g	2	ND	U	g	2	ND	U	g
trans-1,2-Dichloroethene	0.42		1	ND	U	g	1	ND	U	g	1	ND	U	g
cis-1,2-Dichloroethylene	0.43		2	ND	U	g	2	ND	U	g	2	ND	U	g
Chloroform	0.26		1	ND	U	g	1	ND	U	g	1	ND	U	g
1,2-Dichloroethane	0.71		2	ND	U	g	2	ND	U	g	2	ND	U	g
Methyl Ethyl Ketone (2-butanone)	0.52		2	ND	U	g	2	ND	U	g	2	7		g
1,1,1-Trichloroethane	0.54		2	ND	U	g	2	ND	U	g	2	ND	U	g
Carbon Tetrachloride	0.42		2	ND	U	g	2	ND	U	g	2	ND	U	g
Vinyl Acetate	0.52		2	ND	U	g	2	ND	U	g	2	ND	U	g
Bromodichloromethane	0.42		2	ND	U	g	2	ND	U	g	2	ND	U	g
1,2-Dichloropropane	0.48		2	ND	U	g	2	ND	U	g	2	ND	U	g
cis-1,3-Dichloropropene	0.38		1	ND	U	g	1	ND	U	g	1	ND	U	g
Trichloroethylene (tce)	0.18		1	2		g	1	ND	U	g	1	ND	U	g
Dibromochloromethane	0.20		1	ND	U	g	1	ND	U	g	1	ND	U	g
1,1,2-Trichloroethane	0.42		1	ND	U	g	1	ND	U	g	1	ND	U	g
Benzene	0.42		2	ND	U	g	2	ND	U	g	2	4		g

Base: Kotzebue LRRS						Table 2.2.3								
Site: ST5						Analytical Data Summary								
Extraction Method: EPA Method 8260						EPA Method 8260								
Analytical Method: EPA Method 8260														
Matrix: Water														
Units: ug/L														
			Environmental Samples											
		Field ID:		ST05-MW3-01				ST05-MW7-01				ST05-MW8-01		
		Batch ID:		H792				H792				H792		
Parameters	MDL		PQL	Result	Validity	Comments	PQL	Result	Validity	Comments	PQL	Result	Validity	Comments
trans-1,3-Dichloropropene	0.48		2	ND	U	g	2	ND	U	g	2	ND	U	g
2-Chloroethyl Vinyl Ether	0.82		3	ND	U	g	3	ND	U	g	3	ND	U	g
Bromoform	0.48		2	ND	U	g	2	ND	U	g	2	ND	U	g
Methyl Isobutyl Ketone	1.22		4	ND	U	g	4	ND	U	g	4	ND	U	g
2-Hexanone	0.72		2	ND	U	g	2	ND	U	g	2	ND	U	g
Tetrachloroethylene (pce)	0.30		1	ND	U	g	1	ND	U	g	1	ND	U	g
1,1,2,2-Tetrachloroethane	0.56		2	ND	U	g	2	ND	U	g	2	ND	U	g
Toluene	0.46		2	ND	U	g	2	ND	U	g	2	13		g
Chlorobenzene	0.20		1	ND	U	g	1	ND	U	g	1	ND	U	g
Ethylbenzene	0.28		1	ND	U	g	1	ND	U	g	1	27		g
Styrene	0.08		1	ND	U	g	1	ND	U	g	1	ND	U	g
1,1,2-Trichloro-1,2,2-trifluoroethane	0.37		1	ND	U	g	1	ND	U	g	1	ND	U	g
Xylenes, total	0.68		2	ND	U	g	2	ND	U	g	2	420	J	n
1,1,1,2-Tetrachloroethane	0.46		2	ND	U	g	2	ND	U	g	2	ND	U	g
1,2,3-Trichloropropane	0.41		1	ND	U	g	1	ND	U	g	1	ND	U	g
Bromochloromethane	0.24		1	ND	U	g	1	ND	U	g	1	ND	U	g
1-Chlorohexane	1.68		5	ND	U	g	5	ND	U	g	5	ND	U	g
Bromobenzene	0.43		2	ND	U	g	2	ND	U	g	2	ND	U	g

Base: Kotzebue LRRS						Table 2.2.3								
Site: ST5						Analytical Data Summary								
Extraction Method: EPA Method 8260						EPA Method 8260								
Analytical Method: EPA Method 8260														
Matrix: Water														
Units: ug/L														
			Environmental Samples											
		Field ID:		ST05-MW9-01										
		Batch ID:		H792										
Parameters	MDL		PQL	Result	Validity	Comments								
Chloromethane	1.03		3	ND	U	g								
Bromomethane	0.42		2	ND	U	g								
Vinyl Chloride	0.52		2	ND	U	g								
Chloroethane	0.59		2	ND	U	g								
Methylene Chloride	0.41		1	ND	U	g								
Acetone	2.90		9	8	J									
Carbon Disulfide	0.40		2	1	J									
1,1-Dichloroethene	0.71		2	ND	U	g								
1,1-Dichloroethane	0.50		2	ND	U	g								
trans-1,2-Dichloroethene	0.42		1	ND	U	g								
cis-1,2-Dichloroethylene	0.43		2	ND	U	g								
Chloroform	0.26		1	ND	U	g								
1,2-Dichloroethane	0.71		2	ND	U	g								
Methyl Ethyl Ketone (2-butanone)	0.52		2	ND	U	g								
1,1,1-Trichloroethane	0.54		2	ND	U	g								
Carbon Tetrachloride	0.42		2	ND	U	g								
Vinyl Acetate	0.52		2	ND	U	g								
Bromodichloromethane	0.42		2	ND	U	g								
1,2-Dichloropropane	0.48		2	ND	U	g								
cis-1,3-Dichloropropene	0.38		1	ND	U	g								
Trichloroethylene (tce)	0.18		1	ND	U	g								
Dibromochloromethane	0.20		1	ND	U	g								
1,1,2-Trichloroethane	0.42		1	ND	U	g								
Benzene	0.42		2	1	J									

Base: Kotzebue LRRS						Table 2.2.3							
Site: ST5						Analytical Data Summary							
Extraction Method: EPA Method 8260						EPA Method 8260							
Analytical Method: EPA Method 8260													
Matrix: Water													
Units: ug/L													
			Environmental Samples										
		Field ID:		ST05-MW9-01									
		Batch ID:		H792									
Parameters	MDL		PQL	Result	Validity	Comments							
trans-1,3-Dichloropropene	0.48		2	ND	U	g							
2-Chloroethyl Vinyl Ether	0.82		3	ND	U	g							
Bromoform	0.48		2	ND	U	g							
Methyl Isobutyl Ketone	1.22		4	ND	U	g							
2-Hexanone	0.72		2	ND	U	g							
Tetrachloroethylene (pce)	0.30		1	ND	U	g							
1,1,2,2-Tetrachloroethane	0.56		2	ND	U	g							
Toluene	0.46		2	43		g							
Chlorobenzene	0.20		1	ND	U	g							
Ethylbenzene	0.28		1	20		g							
Styrene	0.08		1	ND	U	g							
1,1,2-Trichloro-1,2,2-trifluoroethane	0.37		1	ND	U	g							
Xylenes, total	0.68		2	360	J	n							
1,1,1,2-Tetrachloroethane	0.46		2	ND	U	g							
1,2,3-Trichloropropane	0.41		1	ND	U	g							
Bromochloromethane	0.24		1	ND	U	g							
1-Chlorohexane	1.68		5	ND	U	g							
Bromobenzene	0.43		2	ND	U	g							

Base: Kotzebue LRRS
Site: ST05
Extraction Method: EPA Method 3520
Analytical Method: EPA Method 8270
Matrix: Water
Units: ug/L

Table 7.2.2.6
Analytical Data Summary
EPA Method 8270

			Environmental Samples												
		Field ID:		ST05-SW1-01				ST05-SW2-01				ST05-SW3-01			
		Batch ID:		H718				H718				H718			
Parameters	MDL		PQL	Result	Validity	Comments	PQL	Result	Validity	Comments	PQL	Result	Validity	Comments	
Phenol	0.9		3	ND	UJ	d	3	ND	UJ	d	3	ND	UJ	d	
bis(2-Chloroethyl) Ether	1.9		6	ND	UJ	d	6	ND	UJ	d	6	ND	UJ	d	
2-Chlorophenol	0.2		1	ND	UJ	d	1	ND	UJ	d	1	ND	UJ	d	
1,3-Dichlorobenzene	0.3		1	ND	UJ	d	1	ND	UJ	d	1	1	J	d	
1,4-Dichlorobenzene	0.3		1	ND	UJ	d	1	ND	UJ	d	1	ND	UJ	d	
Benzyl Alcohol	0.7		2	ND	UJ	d	2	ND	UJ	d	2	ND	UJ	d	
1,2-Dichlorobenzene	0.2		1	ND	UJ	d	1	ND	UJ	d	1	ND	UJ	d	
2-Methylphenol	0.2		1	ND	UJ	d	1	ND	UJ	d	1	ND	UJ	d	
2,2'-Oxybis (1-Chloropropane)	0.2		1	ND	UJ	d	1	ND	UJ	d	1	ND	UJ	d	
4-Methylphenol	0.6		2	ND	UJ	d	2	ND	UJ	d	2	ND	UJ	d	
N-Nitrosodi-n-propylamine	1.3		4	ND	UJ	d	4	ND	UJ	d	4	ND	UJ	d	
Hexachloroethane	0.6		2	ND	UJ	d	2	ND	UJ	d	2	ND	UJ	d	
Nitrobenzene	0.3		1	ND	UJ	d	1	ND	UJ	d	1	ND	UJ	d	
Isophorone	0.5		2	ND	UJ	d	2	ND	UJ	d	2	ND	UJ	d	
2-Nitrophenol	0.5		2	ND	UJ	d	2	ND	UJ	d	2	ND	UJ	d	
2,4-Dimethylphenol	2.6		8	ND	UJ	d	8	ND	UJ	d	8	ND	UJ	d	
Benzoic Acid	3.1		10	ND	UJ	d	10	ND	UJ	d	10	ND	UJ	d	
bis(2-Chloroethoxy) Methane	0.5		2	ND	UJ	d	2	ND	UJ	d	2	ND	UJ	d	
2,4-Dichlorophenol	1.0		3	ND	UJ	d	3	ND	UJ	d	3	ND	UJ	d	
1,2,4-Trichlorobenzene	0.2		1	ND	UJ	d	1	ND	UJ	d	1	ND	UJ	d	
Naphthalene	0.2		1	ND	UJ	d	1	ND	UJ	d	1	ND	UJ	d	
4-Chloroaniline	2.0		6	ND	UJ	d	6	ND	UJ	d	6	ND	UJ	d	
Hexachlorobutadiene	0.7		2	ND	UJ	d	2	ND	UJ	d	2	ND	UJ	d	
4-Chloro-3-Methylphenol	1.1		3	ND	UJ	d	3	ND	UJ	d	3	ND	UJ	d	
2-Methylnaphthalene	0.6		2	ND	UJ	d	2	ND	UJ	d	2	ND	UJ	d	
Hexachlorocyclopentadiene	2.9		9	ND	UJ	d	9	ND	UJ	d	9	ND	UJ	d	
2,4,6-Trichlorophenol	1.5		5	ND	UJ	d	5	ND	UJ	d	5	ND	UJ	d	
2,4,5-Trichlorophenol	1.3		4	ND	UJ	d	4	ND	UJ	d	4	ND	UJ	d	
2-Chloronaphthalene	0.5		2	ND	UJ	d	2	ND	UJ	d	2	ND	UJ	d	
2-Nitroaniline	1.3		4	ND	UJ	d	4	ND	UJ	d	4	ND	UJ	d	
Dimethyl Phthalate	0.7		2	ND	UJ	d	2	ND	UJ	d	2	ND	UJ	d	
Acenaphthylene	0.6		2	ND	UJ	d	2	ND	UJ	d	2	ND	UJ	d	
3-Nitroaniline	5.4		20	ND	UJ	d	20	ND	UJ	d	20	ND	UJ	d	
Acenaphthene	0.6		2	ND	UJ	d	2	ND	UJ	d	2	ND	UJ	d	
2,4-Dinitrophenol	8.4		30	ND	UJ	d	30	ND	UJ	d	30	ND	UJ	d	
4-Nitrophenol	1.6		5	ND	UJ	d	5	ND	UJ	d	5	ND	UJ	d	
Dibenzofuran	0.6		2	ND	UJ	d	2	ND	UJ	d	2	ND	UJ	d	
2,6-Dinitrotoluene	1.5		5	ND	UJ	d	5	ND	UJ	d	5	ND	UJ	d	

Base: Kotzebue LRRS
Site: ST05
Extraction Method: EPA Method 3520
Analytical Method: EPA Method 8270
Matrix: Water
Units: ug/L

Table 7.2.2.6
Analytical Data Summary
EPA Method 8270

			Environmental Samples												
		Field ID:		ST05-SW1-01				ST05-SW2-01				ST05-SW3-01			
		Batch ID:		H718				H718				H718			
Parameters	MDL		PQL	Result	Validity	Comments	PQL	Result	Validity	Comments	PQL	Result	Validity	Comments	
2,4-Dinitrotoluene	1.3		4	ND	UJ	d	4	ND	UJ	d	4	ND	UJ	d	
Diethyl Phthalate	1.0		3	ND	UJ	d	3	ND	UJ	d	3	ND	UJ	d	
4-Chlorophenyl Phenyl Ether	0.5		2	ND	UJ	d	2	ND	UJ	d	2	ND	UJ	d	
Fluorene	0.5		2	ND	UJ	d	2	ND	UJ	d	2	ND	UJ	d	
4-Nitroaniline	4.5		10	ND	UJ	d	10	ND	UJ	d	10	ND	UJ	d	
4,6-Dinitro-2-Methylphenol	2.7		9	ND	UJ	d	9	ND	UJ	d	9	ND	UJ	d	
N-Nitrosodiphenylamine	0.6		2	ND	UJ	d	2	ND	UJ	d	2	ND	UJ	d	
4-Bromophenyl Phenyl Ether	0.6		2	ND	UJ	d	2	ND	UJ	d	2	ND	UJ	d	
Hexachlorobenzene	0.6		2	ND	UJ	d	2	ND	UJ	d	2	ND	UJ	d	
Pentachlorophenol	3.7		10	ND	UJ	d	10	ND	UJ	d	10	ND	UJ	d	
Phenanthrene	0.6		2	ND	UJ	d	2	ND	UJ	d	2	ND	UJ	d	
Anthracene	0.7		2	ND	UJ	d	2	ND	UJ	d	2	ND	UJ	d	
di-n-butyl Phthalate	1.0		3	ND	UJ	d	3	ND	UJ	d	3	ND	UJ	d	
Fluroanthene	0.6		2	ND	UJ	d	2	ND	UJ	d	2	ND	UJ	d	
Pyrene	0.6		2	ND	UJ	d	2	ND	UJ	d	2	ND	UJ	d	
Butylbenzylphthalate	0.7		2	ND	UJ	d	2	ND	UJ	d	2	ND	UJ	d	
3,3'-Dichlorobenzidine	2.1		7	ND	UJ	d	7	ND	UJ	d	7	ND	UJ	d	
Benzo(a)anthracene	0.6		2	ND	UJ	d	2	ND	UJ	d	2	ND	UJ	d	
bis(2-Ethylhexyl) Phthalate	0.6		2	ND	UJ	d	2	ND	UJ	d	2	ND	UJ	d	
Chrysene	0.6		2	ND	UJ	d	2	ND	UJ	d	2	ND	UJ	d	
di-n-Octylphthalate	0.6		2	ND	UJ	d	2	ND	UJ	d	2	ND	UJ	d	
Benzo(b)fluoranthene	0.6		2	ND	UJ	d	2	ND	UJ	d	2	ND	UJ	d	
Benzo(k)fluoranthene	0.8		3	ND	UJ	d	3	ND	UJ	d	3	ND	UJ	d	
Benzo(a)pyrene	0.7		2	ND	UJ	d	2	ND	UJ	d	2	ND	UJ	d	
Indeno(1,2,3-c,d)pyrene	0.5		2	ND	UJ	d	2	ND	UJ	d	2	ND	UJ	d	
Dibenzo(a,h)anthracene	0.6		2	ND	UJ	d	2	ND	UJ	d	2	ND	UJ	d	
Benzo(g,h,i)perylene	0.5		2	ND	UJ	d	2	ND	UJ	d	2	ND	UJ	d	

Base: Kotzebue LRRS
Site: ST05
Extraction Method: EPA Method 3520
Analytical Method: EPA Method 8270
Matrix: Water
Units: ug/L

Table 7.2.2.6
Analytical Data Summary
EPA Method 8270

		Environmental Samples	
Field ID:		ST05-SW4-01	
Batch ID:		H718	

Parameters	MDL	PQL	Result	Validity	Comments
Phenol	0.9	3	ND	UJ	d
bis(2-Chloroethyl) Ether	1.9	6	ND	UJ	d
2-Chlorophenol	0.2	1	ND	UJ	d
1,3-Dichlorobenzene	0.3	1	1	J	d
1,4-Dichlorobenzene	0.3	1	ND	UJ	d
Benzyl Alcohol	0.7	2	ND	UJ	d
1,2-Dichlorobenzene	0.2	1	ND	UJ	d
2-Methylphenol	0.2	1	ND	UJ	d
2,2'-Oxybis (1-Chloropropane)	0.2	1	ND	UJ	d
4-Methylphenol	0.6	2	ND	UJ	d
N-Nitrosodi-n-propylamine	1.3	4	ND	UJ	d
Hexachloroethane	0.6	2	ND	UJ	d
Nitrobenzene	0.3	1	ND	UJ	d
Isophorone	0.5	2	ND	UJ	d
2-Nitrophenol	0.5	2	ND	UJ	d
2,4-Dimethylphenol	2.6	8	ND	UJ	d
Benzoic Acid	3.1	10	ND	UJ	d
bis(2-Chloroethoxy) Methane	0.5	2	ND	UJ	d
2,4-Dichlorophenol	1.0	3	ND	UJ	d
1,2,4-Trichlorobenzene	0.2	1	ND	UJ	d
Naphthalene	0.2	1	ND	UJ	d
4-Chloroaniline	2.0	6	ND	UJ	d
Hexachlorobutadiene	0.7	2	ND	UJ	d
4-Chloro-3-Methylphenol	1.1	3	ND	UJ	d
2-Methylnaphthalene	0.6	2	ND	UJ	d
Hexachlorocyclopentadiene	2.9	9	ND	UJ	d
2,4,6-Trichlorophenol	1.5	5	ND	UJ	d
2,4,5-Trichlorophenol	1.3	4	ND	UJ	d
2-Chloronaphthalene	0.5	2	ND	UJ	d
2-Nitroaniline	1.3	4	ND	UJ	d
Dimethyl Phthalate	0.7	2	ND	UJ	d
Acenaphthylene	0.6	2	ND	UJ	d
3-Nitroaniline	5.4	20	ND	UJ	d
Acenaphthene	0.6	2	ND	UJ	d
2,4-Dinitrophenol	8.4	30	ND	UJ	d
4-Nitrophenol	1.6	5	ND	UJ	d
Dibenzofuran	0.6	2	ND	UJ	d
2,6-Dinitrotoluene	1.5	5	ND	UJ	d

Base: Kotzebue LRRS						Table 7.2.2.6									
Site: ST05						Analytical Data Summary									
Extraction Method: EPA Method 3520						EPA Method 8270									
Analytical Method: EPA Method 8270															
Matrix: Water															
Units: ug/L															
			Environmental Samples												
		Field ID:		ST05-SW4-01											
		Batch ID:		H718											
Parameters	MDL		PQL	Result	Validity	Comments									
2,4-Dinitrotoluene	1.3		4	ND	UJ	d									
Diethyl Phthalate	1.0		3	ND	UJ	d									
4-Chlorophenyl Phenyl Ether	0.5		2	ND	UJ	d									
Fluorene	0.5		2	ND	UJ	d									
4-Nitroaniline	4.5		10	ND	UJ	d									
4,6-Dinitro-2-Methylphenol	2.7		9	ND	UJ	d									
N-Nitrosodiphenylamine	0.6		2	ND	UJ	d									
4-Bromophenyl Phenyl Ether	0.6		2	ND	UJ	d									
Hexachlorobenzene	0.6		2	ND	UJ	d									
Pentachlorophenol	3.7		10	ND	UJ	d									
Phenanthrene	0.6		2	ND	UJ	d									
Anthracene	0.7		2	ND	UJ	d									
di-n-butyl Phthalate	1.0		3	ND	UJ	d									
Fluroanthene	0.6		2	ND	UJ	d									
Pyrene	0.6		2	ND	UJ	d									
Butylbenzylphthalate	0.7		2	ND	UJ	d									
3,3'-Dichlorobenzidine	2.1		7	ND	UJ	d									
Benzo(a)anthracene	0.6		2	ND	UJ	d									
bis(2-Ethylhexyl) Phthalate	0.6		2	ND	UJ	d									
Chrysene	0.6		2	ND	UJ	d									
di-n-Octylphthalate	0.6		2	ND	UJ	d									
Benzo(b)fluoranthene	0.6		2	ND	UJ	d									
Benzo(k)fluoranthene	0.8		3	ND	UJ	d									
Benzo(a)pyrene	0.7		2	ND	UJ	d									
Indeno(1,2,3-c,d)pyrene	0.5		2	ND	UJ	d									
Dibenzo(a,h)anthracene	0.6		2	ND	UJ	d									
Benzo(g,h,i)perylene	0.5		2	ND	UJ	d									

Base: Kotzebue LRRS
Site: ST05
Extraction Method: EPA Method 3520
Analytical Method: EPA Method 8270
Matrix: Water
Units: ug/L

Table 7.2.2.5
Analytical Data Summary
EPA Method 8270

			Environmental Samples												
		Field ID:		ST05-MW1-01				ST05-MW10-01				ST05-MW2-01			
		Batch ID:		H785				H785				H785			
Parameters	MDL		PQL	Result	Validity	Comments	PQL	Result	Validity	Comments	PQL	Result	Validity	Comments	
												Dilution 5			
Phenol	0.9		3	ND	U	g	3	ND	U	g	14	ND	U	g	
bis(2-Chloroethyl) Ether	1.9		6	ND	U	g	6	ND	U	g	30	ND	U	g	
2-Chlorophenol	0.2		1	ND	U	g	1	ND	U	g	4	ND	U	g	
1,3-Dichlorobenzene	0.3		1	1	J		1	1	J		4	ND	U	g	
1,4-Dichlorobenzene	0.3		1	ND	U	g	1	ND	U	g	5	ND	U	g	
Benzyl Alcohol	0.7		2	ND	U	g	2	ND	U	g	12	ND	U	g	
1,2-Dichlorobenzene	0.2		1	ND	U	g	1	ND	U	g	3	ND	U	g	
2-Methylphenol	0.2		1	ND	U	g	1	ND	U	g	4	ND	U	g	
2,2'-Oxybis (1-Chloropropane)	0.2		1	ND	U	g	1	ND	U	g	3	ND	U	g	
4-Methylphenol	0.6		2	ND	U	g	2	ND	U	g	9	ND	U	g	
N-Nitrosodi-n-propylamine	1.3		4	ND	U	g	4	ND	U	g	20	ND	U	g	
Hexachloroethane	0.6		2	ND	U	g	2	ND	U	g	10	ND	U	g	
Nitrobenzene	0.3		1	ND	U	g	1	ND	U	g	5	ND	U	g	
Isophorone	0.5		2	ND	U	g	2	ND	U	g	9	ND	U	g	
2-Nitrophenol	0.5		2	ND	U	g	2	ND	U	g	8	ND	U	g	
2,4-Dimethylphenol	2.6		8	ND	U	g	8	ND	U	g	41	ND	U	g	
Benzoic Acid	3.1		10	ND	U	g	10	ND	U	g	50	ND	U	g	
bis(2-Chloroethoxy) Methane	0.5		2	ND	U	g	2	ND	U	g	8	ND	U	g	
2,4-Dichlorophenol	1.0		3	ND	U	g	3	ND	U	g	16	ND	U	g	
1,2,4-Trichlorobenzene	0.2		1	ND	U	g	1	ND	U	g	3	ND	U	g	
Naphthalene	0.2		1	ND	U	g	1	ND	U	g	4	80		g	
4-Chloroaniline	2.0		6	ND	U	g	6	ND	U	g	32	ND	U	g	
Hexachlorobutadiene	0.7		2	ND	U	g	2	ND	U	g	12	ND	U	g	
4-Chloro-3-Methylphenol	1.1		3	ND	U	g	3	ND	U	g	17	ND	U	g	
2-Methylnaphthalene	0.6		2	ND	U	g	2	ND	U	g	10	36		g	
Hexachlorocyclopentadiene	2.9		9	ND	U	g	9	ND	U	g	46	ND	U	g	
2,4,6-Trichlorophenol	1.5		5	ND	U	g	5	ND	U	g	24	ND	U	g	
2,4,5-Trichlorophenol	1.3		4	ND	U	g	4	ND	U	g	20	ND	U	g	
2-Chloronaphthalene	0.5		2	ND	U	g	2	ND	U	g	8	ND	U	g	
2-Nitroaniline	1.3		4	ND	U	g	4	ND	U	g	20	ND	U	g	
Dimethyl Phthalate	0.7		2	ND	U	g	2	ND	U	g	12	ND	U	g	
Acenaphthylene	0.6		2	ND	U	g	2	ND	U	g	10	ND	U	g	
3-Nitroaniline	5.4		20	ND	U	g	20	ND	U	g	87	ND	U	g	
Acenaphthene	0.6		2	ND	U	g	2	ND	U	g	9	ND	U	g	
2,4-Dinitrophenol	8.4		30	ND	U	g	30	ND	U	g	130	ND	U	g	
4-Nitrophenol	1.6		5	ND	U	g	5	ND	U	g	25	ND	U	g	
Dibenzofuran	0.6		2	ND	U	g	2	ND	U	g	10	ND	U	g	
2,6-Dinitrotoluene	1.5		5	ND	U	g	5	ND	U	g	23	ND	U	g	

Base: Kotzebue LRRS
Site: ST05
Extraction Method: EPA Method 3520
Analytical Method: EPA Method 8270
Matrix: Water
Units: ug/L

Table 7.2.2.6
Analytical Data Summary
EPA Method 8270

			Environmental Samples												
		Field ID:		ST05-MW1-01				ST05-MW10-01				ST05-MW2-01			
		Batch ID:		H785				H785				H785			
Parameters	MDL		PQL	Result	Validity	Comments	PQL	Result	Validity	Comments	PQL	Result	Validity	Comments	
												Dilution 5			
2,4-Dinitrotoluene	1.3		4	ND	U	g	4	ND	U	g	21	ND	U	g	
Diethyl Phthalate	1.0		3	ND	U	g	3	ND	U	g	16	ND	U	g	
4-Chlorophenyl Phenyl Ether	0.5		2	ND	U	g	2	ND	U	g	8	ND	U	g	
Fluorene	0.5		2	ND	U	g	2	ND	U	g	8	ND	U	g	
4-Nitroaniline	4.5		10	ND	U	g	10	ND	U	g	71	ND	U	g	
4,6-Dinitro-2-Methylphenol	2.7		9	ND	U	g	9	ND	U	g	44	ND	U	g	
N-Nitrosodiphenylamine	0.6		2	ND	U	g	2	ND	U	g	10	ND	U	g	
4-Bromophenyl Phenyl Ether	0.6		2	ND	U	g	2	ND	U	g	9	ND	U	g	
Hexachlorobenzene	0.6		2	ND	U	g	2	ND	U	g	10	ND	U	g	
Pentachlorophenol	3.7		10	ND	U	g	10	ND	U	g	59	ND	U	g	
Phenanthrene	0.6		2	ND	U	g	2	ND	U	g	10	ND	U	g	
Anthracene	0.7		2	ND	U	g	2	ND	U	g	11	ND	U	g	
di-n-butyl Phthalate	1.0		3	ND	U	g	3	ND	U	g	15	ND	U	g	
Fluroanthene	0.6		2	ND	U	g	2	ND	U	g	9	ND	U	g	
Pyrene	0.6		2	ND	U	g	2	ND	U	g	10	ND	U	g	
Butylbenzylphthalate	0.7		2	ND	U	g	2	ND	U	g	11	ND	U	g	
3,3'-Dichlorobenzidine	2.1		7	ND	U	g	7	ND	U	g	33	ND	U	g	
Benzo(a)anthracene	0.6		2	ND	U	g	2	ND	U	g	9	ND	U	g	
bis(2-Ethylhexyl) Phthalate	0.6		2	ND	U	g	2	ND	U	g	10	ND	U	g	
Chrysene	0.6		2	ND	U	g	2	ND	U	g	10	ND	U	g	
di-n-Octylphthalate	0.6		2	ND	U	g	2	ND	U	g	10	ND	U	g	
Benzo(b)fluoranthene	0.6		2	ND	U	g	2	ND	U	g	10	ND	U	g	
Benzo(k)fluoranthene	0.8		3	ND	U	g	3	ND	U	g	13	ND	U	g	
Benzo(a)pyrene	0.7		2	ND	U	g	2	ND	U	g	12	ND	U	g	
Indeno(1,2,3-c,d)pyrene	0.5		2	ND	U	g	2	ND	U	g	8	ND	U	g	
Dibenzo(a,h)anthracene	0.6		2	ND	U	g	2	ND	U	g	9	ND	U	g	
Benzo(g,h,i)perylene	0.5		2	ND	U	g	2	ND	U	g	9	ND	U	g	

Base: Kotzebue LRRS
Site: ST05
Extraction Method: EPA Method 3520
Analytical Method: EPA Method 8270
Matrix: Water
Units: ug/L

Table 7.2.2.6
Analytical Data Summary
EPA Method 8270

Environmental Samples

		Field ID:		ST05-MW4-01				ST05-MW5-01				ST05-MW6-01			
		Batch ID:		H785				H785				H785			
Parameters	MDL		PQL	Result	Validity	Comments	PQL	Result	Validity	Comments	PQL	Result	Validity	Comments	
Phenol	0.9		3	ND	U	g	3	ND	U	g	3	ND	U	g	
bis(2-Chloroethyl) Ether	1.9		6	ND	U	g	6	ND	U	g	6	ND	U	g	
2-Chlorophenol	0.2		1	ND	U	g	1	ND	U	g	1	ND	U	g	
1,3-Dichlorobenzene	0.3		1	1		g	1	1	J	n	1	1	J	n	
1,4-Dichlorobenzene	0.3		1	ND	U	g	1	ND	U	g	1	ND	U	g	
Benzyl Alcohol	0.7		2	ND	U	g	2	ND	U	g	2	ND	U	g	
1,2-Dichlorobenzene	0.2		1	ND	U	g	1	ND	U	g	1	ND	U	g	
2-Methylphenol	0.2		1	ND	U	g	1	ND	U	g	1	ND	U	g	
2,2'-Oxybis (1-Chloropropane)	0.2		1	ND	U	g	1	ND	U	g	1	ND	U	g	
4-Methylphenol	0.6		2	ND	U	g	2	ND	U	g	2	ND	U	g	
N-Nitrosodi-n-propylamine	1.3		4	ND	U	g	4	ND	U	g	4	ND	U	g	
Hexachloroethane	0.6		2	ND	U	g	2	ND	U	g	2	ND	U	g	
Nitrobenzene	0.3		1	ND	U	g	1	ND	U	g	7	ND	U	g	
Isophorone	0.5		2	ND	U	g	2	ND	U	g	2	ND	U	g	
2-Nitrophenol	0.5		2	ND	U	g	2	ND	U	g	3	ND	U	g	
2,4-Dimethylphenol	2.6		8	ND	U	g	8	ND	U	g	8	ND	U	g	
Benzoic Acid	3.1		10	ND	U	g	10	ND	U	g	10	ND	U	g	
bis(2-Chloroethoxy) Methane	0.5		2	ND	U	g	2	ND	U	g	3	ND	U	g	
2,4-Dichlorophenol	1.0		3	ND	U	g	3	ND	U	g	3	ND	U	g	
1,2,4-Trichlorobenzene	0.2		1	ND	U	g	1	ND	U	g	1	ND	U	g	
Naphthalene	0.2		1	ND	U	g	1	9	J	n	1	220 E**	J	n	
4-Chloroaniline	2.0		6	ND	U	g	6	ND	U	g	6	ND	U	g	
Hexachlorobutadiene	0.7		2	ND	U	g	2	ND	U	g	2	ND	U	g	
4-Chloro-3-Methylphenol	1.1		3	ND	U	g	3	ND	U	g	3	ND	U	g	
2-Methylnaphthalene	0.6		2	ND	U	g	2	30		g	2	170 E**	J	n	
Hexachlorocyclopentadiene	2.9		9	ND	U	g	9	ND	U	g	9	ND	U	g	
2,4,6-Trichlorophenol	1.5		5	ND	U	g	5	ND	U	g	5	ND	U	g	
2,4,5-Trichlorophenol	1.3		4	ND	U	g	4	ND	U	g	4	ND	U	g	
2-Chloronaphthalene	0.5		2	ND	U	g	2	ND	U	g	2	ND	U	g	
2-Nitroaniline	1.3		4	ND	U	g	4	ND	U	g	7	ND	U	g	
Dimethyl Phthalate	0.7		2	ND	U	g	2	ND	U	g	2	ND	U	g	
Acenaphthylene	0.6		2	ND	U	g	2	ND	U	g	2	2	J	n	
3-Nitroaniline	5.4		20	ND	U	g	20	ND	U	g	20	ND	U	g	
Acenaphthene	0.6		2	ND	U	g	2	ND	U	g	2	2	J	n	
2,4-Dinitrophenol	8.4		30	ND	U	g	30	ND	U	g	30	ND	U	g	
4-Nitrophenol	1.6		5	ND	U	g	5	ND	U	g	13	ND	U	g	
Dibenzofuran	0.6		2	ND	U	g	2	ND	U	g	2	1	J	n	
2,6-Dinitrotoluene	1.5		5	ND	U	g	5	ND	U	g	5	ND	U	g	

** Analyte detected above linear calibration range.

Base: Kotzebue LRRS
Site: ST05
Extraction Method: EPA Method 3520
Analytical Method: EPA Method 8270
Matrix: Water
Units: ug/L

Table 7.2.2.6
Analytical Data Summary
EPA Method 8270

			Environmental Samples												
		Field ID:		ST05-MW4-01				ST05-MW5-01				ST05-MW6-01			
		Batch ID:		H785				H785				H785			
Parameters	MDL		PQL	Result	Validity	Comments	PQL	Result	Validity	Comments	PQL	Result	Validity	Comments	
2,4-Dinitrotoluene	1.3		4	ND	U	g	4	ND	U	g	4	ND	U	g	
Diethyl Phthalate	1.0		3	ND	U	g	3	ND	U	g	3	ND	U	g	
4-Chlorophenyl Phenyl Ether	0.5		2	ND	U	g	2	ND	U	g	2	ND	U	g	
Fluorene	0.5		2	ND	U	g	2	1	J		2	3		g	
4-Nitroaniline	4.5		10	ND	U	g	10	ND	U	g	10	ND	U	g	
4,6-Dinitro-2-Methylphenol	2.7		9	ND	U	g	9	ND	U	g	9	ND	U	g	
N-Nitrosodiphenylamine	0.6		2	ND	U	g	2	ND	U	g	2	ND	U	g	
4-Bromophenyl Phenyl Ether	0.6		2	ND	U	g	2	ND	U	g	2	ND	U	g	
Hexachlorobenzene	0.6		2	ND	U	g	2	ND	U	g	2	ND	U	g	
Pentachlorophenol	3.7		10	ND	U	g	10	ND	U	g	10	ND	U	g	
Phenanthrene	0.6		2	ND	U	g	2	1	J		2	1	J		
Anthracene	0.7		2	ND	U	g	2	ND	U	g	2	ND	U	g	
di-n-butyl Phthalate	1.0		3	ND	U	g	3	ND	U	g	3	ND	U	g	
Fluroanthene	0.6		2	ND	U	g	2	ND	U	g	2	ND	U	g	
Pyrene	0.6		2	ND	U	g	2	ND	U	g	2	ND	U	g	
Butylbenzylphthalate	0.7		2	ND	U	g	2	ND	U	g	2	ND	U	g	
3,3'-Dichlorobenzidine	2.1		7	ND	U	g	7	ND	U	g	7	ND	U	g	
Benzo(a)anthracene	0.6		2	ND	U	g	2	ND	U	g	2	ND	U	g	
bis(2-Ethylhexyl) Phthalate	0.6		2	ND	U	g	2	1	J		2	1	J		
Chrysene	0.6		2	ND	U	g	2	ND	U	g	2	ND	U	g	
di-n-Octylphthalate	0.6		2	ND	U	g	2	ND	U	g	2	ND	U	g	
Benzo(b)fluoranthene	0.6		2	ND	U	g	2	ND	U	g	2	ND	U	g	
Benzo(k)fluoranthene	0.8		3	ND	U	g	3	ND	U	g	3	ND	U	g	
Benzo(a)pyrene	0.7		2	ND	U	g	2	ND	U	g	2	ND	U	g	
Indeno(1,2,3-c,d)pyrene	0.5		2	ND	U	g	2	ND	U	g	2	ND	U	g	
Dibenzo(a,h)anthracene	0.6		2	ND	U	g	2	ND	U	g	2	ND	U	g	
Benzo(g,h,i)perylene	0.5		2	ND	U	g	2	ND	U	g	2	ND	U	g	

Base: Kotzebue LRRS
Site: ST05
Extraction Method: EPA Method 3520
Analytical Method: EPA Method 8270
Matrix: Water
Units: ug/L

Table 7.2.2.6
Analytical Data Summary
EPA Method 8270

Environmental Samples

Field ID:	ST05-MW6-01DL
Batch ID:	H785

Parameters	MDL	PQL	Result	Validity	Comments
			Dilution 8		
Phenol	0.9	22	ND	U	g
bis(2-Chloroethyl) Ether	1.9	49	ND	U	g
2-Chlorophenol	0.2	6	ND	U	g
1,3-Dichlorobenzene	0.3	7	ND	U	g
1,4-Dichlorobenzene	0.3	8	ND	U	g
Benzyl Alcohol	0.7	19	ND	U	g
1,2-Dichlorobenzene	0.2	5	ND	U	g
2-Methylphenol	0.2	6	ND	U	g
2,2'-Oxybis (1-Chloropropane)	0.2	5	ND	U	g
4-Methylphenol	0.6	14	ND	U	g
N-Nitrosodi-n-propylamine	1.3	32	ND	U	g
Hexachloroethane	0.6	15	ND	U	g
Nitrobenzene	0.3	8	ND	U	g
Isophorone	0.5	14	ND	U	g
2-Nitrophenol	0.5	13	ND	U	g
2,4-Dimethylphenol	2.6	65	ND	U	g
Benzoic Acid	3.1	80	ND	U	g
bis(2-Chloroethoxy) Methane	0.5	12	ND	U	g
2,4-Dichlorophenol	1.0	25	ND	U	g
1,2,4-Trichlorobenzene	0.2	5	ND	U	g
Naphthalene	0.2	6	230	J	n
4-Chloroaniline	2.0	52	ND	U	g
Hexachlorobutadiene	0.7	19	ND	U	g
4-Chloro-3-Methylphenol	1.1	27	ND	U	g
2-Methylnaphthalene	0.6	16	180	J	n
Hexachlorocyclopentadiene	2.9	74	ND	U	g
2,4,6-Trichlorophenol	1.5	38	ND	U	g
2,4,5-Trichlorophenol	1.3	32	ND	U	g
2-Chloronaphthalene	0.5	13	ND	U	g
2-Nitroaniline	1.3	33	ND	U	g
Dimethyl Phthalate	0.7	18	ND	U	g
Acenaphthylene	0.6	16	ND	U	g
3-Nitroaniline	5.4	140	ND	U	g
Acenaphthene	0.6	15	ND	U	g
2,4-Dinitrophenol	8.4	210	ND	U	g
4-Nitrophenol	1.6	41	ND	U	g
Dibenzofuran	0.6	16	ND	U	g
2,6-Dinitrotoluene	1.5	37	ND	U	g

Base: Kotzebue LRRS						Table 7.2.2.5										
Site: ST05						Analytical Data Summary										
Extraction Method: EPA Method 3520						EPA Method 8270										
Analytical Method: EPA Method 8270																
Matrix: Water																
Units: ug/L																
			Environmental Samples													
		Field ID:		ST05-MW6-01DL												
		Batch ID:		H785												
Parameters	MDL		PQL	Result	Validity	Comments										
				Dilution 8												
2,4-Dinitrotoluene	1.3		34	ND	U	g										
Diethyl Phthalate	1.0		25	ND	U	g										
4-Chlorophenyl Phenyl Ether	0.5		13	ND	U	g										
Fluorene	0.5		13	ND	U	g										
4-Nitroaniline	4.5		110	ND	U	g										
4,6-Dinitro-2-Methylphenol	2.7		70	ND	U	g										
N-Nitrosodiphenylamine	0.6		15	ND	U	g										
4-Bromophenyl Phenyl Ether	0.6		14	ND	U	g										
Hexachlorobenzene	0.6		16	ND	U	g										
Pentachlorophenol	3.7		95	ND	U	g										
Phenanthrene	0.6		16	ND	U	g										
Anthracene	0.7		18	ND	U	g										
di-n-butyl Phthalate	1.0		24	ND	U	g										
Fluroanthene	0.6		14	ND	U	g										
Pyrene	0.6		16	ND	U	g										
Butylbenzylphthalate	0.7		18	ND	U	g										
3,3'-Dichlorobenzidine	2.1		53	ND	U	g										
Benzo(a)anthracene	0.6		14	ND	U	g										
bis(2-Ethylhexyl) Phthalate	0.6		16	ND	U	g										
Chrysene	0.6		16	ND	U	g										
di-n-Octylphthalate	0.6		16	ND	U	g										
Benzo(b)fluoranthene	0.6		16	ND	U	g										
Benzo(k)fluoranthene	0.8		21	ND	U	g										
Benzo(a)pyrene	0.7		19	ND	U	g										
Indeno(1,2,3-c,d)pyrene	0.5		13	ND	U	g										
Dibenzo(a,h)anthracene	0.6		15	ND	U	g										
Benzo(g,h,i)perylene	0.5		14	ND	U	g										

Base: Kotzebue LRRS
Site: ST05
Extraction Method: EPA Method 3520
Analytical Method: EPA Method 8270
Matrix: Water
Units: ug/L

Table 7.2.2.5
Analytical Data Summary
EPA Method 8270

Environmental Samples

Parameters	MDL	Field ID:	ST05-MW3-01				ST05-MW7-01				ST05-MW8-01			
		Batch ID:	H792				H792				H792			
		PQL	Result	Validity	Comments	PQL	Result	Validity	Comments	PQL	Result	Validity	Comments	
Phenol	0.9	3	ND	U	g	3	ND	U	g	3	3	J	n	
bis(2-Chloroethyl) Ether	1.9	6	ND	U	g	6	ND	U	g	6	ND	U	g	
2-Chlorophenol	0.2	1	ND	U	g	1	ND	U	g	1	ND	U	g	
1,3-Dichlorobenzene	0.3	1	1	B	k	1	1	B	k	1	ND	U	k	
1,4-Dichlorobenzene	0.3	1	ND	U	g	1	ND	U	g	1	ND	U	g	
Benzyl Alcohol	0.7	2	ND	U	g	2	ND	U	g	2	ND	U	g	
1,2-Dichlorobenzene	0.2	1	ND	U	g	1	ND	U	g	1	ND	U	g	
2-Methylphenol	0.2	1	ND	U	g	1	ND	U	g	1	ND	U	g	
2,2'-Oxybis (1-Chloropropane)	0.2	1	ND	U	g	1	ND	U	g	1	ND	U	g	
4-Methylphenol	0.6	2	ND	U	g	2	ND	U	g	2	ND	U	g	
N-Nitrosodi-n-propylamine	1.3	4	ND	U	g	4	ND	U	g	4	ND	U	g	
Hexachloroethane	0.6	2	ND	U	g	2	ND	U	g	2	ND	U	g	
Nitrobenzene	0.3	1	ND	U	g	1	ND	U	g	6	ND	U	g	
Isophorone	0.5	2	ND	U	g	2	ND	U	g	2	ND	U	g	
2-Nitrophenol	0.5	2	ND	U	g	2	ND	U	g	3	ND	U	g	
2,4-Dimethylphenol	2.6	8	ND	U	g	8	ND	U	g	8	ND	U	g	
Benzoic Acid	3.1	10	ND	U	g	10	ND	U	g	10	54	J	n	
bis(2-Chloroethoxy) Methane	0.5	2	ND	U	g	2	ND	U	g	2	ND	U	g	
2,4-Dichlorophenol	1.0	3	ND	U	g	3	ND	U	g	3	ND	U	g	
1,2,4-Trichlorobenzene	0.2	1	ND	U	g	1	ND	U	g	1	ND	U	g	
Naphthalene	0.2	1	ND	U	g	1	ND	U	g	1	170 E**	J	n	
4-Chloroaniline	2.0	6	ND	U	g	6	ND	U	g	6	ND	U	g	
Hexachlorobutadiene	0.7	2	ND	U	g	2	ND	U	g	2	ND	U	g	
4-Chloro-3-Methylphenol	1.1	3	ND	U	g	3	ND	U	g	22	ND	U	g	
2-Methylnaphthalene	0.6	2	ND	U	g	2	ND	U	g	2	170 E**	J	n	
Hexachlorocyclopentadiene	2.9	9	ND	U	g	9	ND	U	g	9	ND	U	g	
2,4,6-Trichlorophenol	1.5	5	ND	U	g	5	ND	U	g	5	ND	U	g	
2,4,5-Trichlorophenol	1.3	4	ND	U	g	4	ND	U	g	4	ND	U	g	
2-Chloronaphthalene	0.5	2	ND	U	g	2	ND	U	g	2	ND	U	g	
2-Nitroaniline	1.3	4	ND	U	g	4	ND	U	g	10	ND	U	g	
Dimethyl Phthalate	0.7	2	ND	U	g	2	ND	U	g	2	ND	U	g	
Acenaphthylene	0.6	2	ND	U	g	2	ND	U	g	2	ND	U	g	
3-Nitroaniline	5.4	20	ND	U	g	20	ND	U	g	20	ND	U	g	
Acenaphthene	0.6	2	ND	U	g	2	ND	U	g	2	1	J	n	
2,4-Dinitrophenol	8.4	30	ND	U	g	30	ND	U	g	30	ND	U	g	
4-Nitrophenol	1.6	5	ND	U	g	5	ND	U	g	12	ND	U	g	
Dibenzofuran	0.6	2	ND	U	g	2	ND	U	g	2	1	J	n	
2,6-Dinitrotoluene	1.5	5	ND	U	g	5	ND	U	g	27	ND	U	g	

** Analyte detected above linear calibration range.

Base: Kotzebue LRRS						Table 7.2.2.5									
Site: ST05						Analytical Data Summary									
Extraction Method: EPA Method 3520						EPA Method 8270									
Analytical Method: EPA Method 8270															
Matrix: Water															
Units: ug/L															
			Environmental Samples												
		Field ID:		ST05-MW3-01				ST05-MW7-01				ST05-MW8-01			
		Batch ID:		H792				H792				H792			
Parameters	MDL		PQL	Result	Validity	Comments	PQL	Result	Validity	Comments	PQL	Result	Validity	Comments	
2,4-Dinitrotoluene	1.3		4	ND	U	g	4	ND	U	g	4	ND	U	g	
Diethyl Phthalate	1.0		3	ND	U	g	3	ND	U	g	3	ND	U	g	
4-Chlorophenyl Phenyl Ether	0.5		2	ND	U	g	2	ND	U	g	2	ND	U	g	
Fluorene	0.5		2	1	J		2	ND	U	g	2	4		g	
4-Nitroaniline	4.5		10	ND	U	g	10	ND	U	g	10	ND	U	g	
4,6-Dinitro-2-Methylphenol	2.7		9	ND	U	g	9	ND	U	g	9	ND	U	g	
N-Nitrosodiphenylamine	0.6		2	ND	U	g	2	ND	U	g	2	ND	U	g	
4-Bromophenyl Phenyl Ether	0.6		2	ND	U	g	2	ND	U	g	2	ND	U	g	
Hexachlorobenzene	0.6		2	ND	U	g	2	ND	U	g	2	ND	U	g	
Pentachlorophenol	3.7		10	ND	U	g	10	ND	U	g	10	ND	U	g	
Phenanthrene	0.6		2	ND	U	g	2	ND	U	g	2	1	J		
Anthracene	0.7		2	ND	U	g	2	ND	U	g	2	ND	U	g	
di-n-butyl Phthalate	1.0		3	ND	U	g	3	ND	U	g	3	ND	U	g	
Fluroanthene	0.6		2	ND	U	g	2	ND	U	g	2	ND	U	g	
Pyrene	0.6		2	ND	U	g	2	ND	U	g	2	ND	U	g	
Butylbenzylphthalate	0.7		2	ND	U	g	2	ND	U	g	2	ND	U	g	
3,3'-Dichlorobenzidine	2.1		7	ND	U	g	7	ND	U	g	7	ND	U	g	
Benzo(a)anthracene	0.6		2	ND	U	g	2	ND	U	g	2	ND	U	g	
bis(2-Ethylhexyl) Phthalate	0.6		2	ND	U	g	2	ND	U	g	2	1	J		
Chrysene	0.6		2	ND	U	g	2	ND	U	g	2	ND	U	g	
di-n-Octylphthalate	0.6		2	ND	U	g	2	ND	U	g	2	3		g	
Benzo(b)fluoranthene	0.6		2	ND	U	g	2	ND	U	g	2	ND	U	g	
Benzo(k)fluoranthene	0.8		3	ND	U	g	3	ND	U	g	3	ND	U	g	
Benzo(a)pyrene	0.7		2	ND	U	g	2	ND	U	g	2	ND	U	g	
Indeno(1,2,3-c,d)pyrene	0.5		2	ND	U	g	2	ND	U	g	2	ND	U	g	
Dibenzo(a,h)anthracene	0.6		2	ND	U	g	2	ND	U	g	2	ND	U	g	
Benzo(g,h,i)perylene	0.5		2	ND	U	g	2	ND	U	g	2	ND	U	g	

Base: Kotzebue LRRS
Site: ST05
Extraction Method: EPA Method 3520
Analytical Method: EPA Method 8270
Matrix: Water
Units: ug/L

Table 7.2.2.6
Analytical Data Summary
EPA Method 8270

Environmental Samples

		Field ID:	ST05-MW8-01DL				ST05-MW9-01				ST05-MW9-01DL			
		Batch ID:	H792				H792				H792			
Parameters	MDL		PQL	Result	Validity	Comments	PQL	Result	Validity	Comments	PQL	Result	Validity	Comments
				Dilution 5								Dilution 8		
Phenol	0.9		10	ND	U	g	3	ND	U	g	22	ND	U	g
bis(2-Chloroethyl) Ether	1.9		30	ND	U	g	6	ND	U	g	49	ND	U	g
2-Chlorophenol	0.2		4	ND	U	g	1	ND	U	g	6	ND	U	g
1,3-Dichlorobenzene	0.3		4	ND	U	k	1	1	J	k,n	7	ND	U	k
1,4-Dichlorobenzene	0.3		5	ND	U	g	1	ND	U	g	8	ND	U	g
Benzyl Alcohol	0.7		10	ND	U	g	2	ND	U	g	19	ND	U	g
1,2-Dichlorobenzene	0.2		3	ND	U	g	1	ND	U	g	5	ND	U	g
2-Methylphenol	0.2		4	ND	U	g	1	ND	U	g	6	ND	U	g
2,2'-Oxybis (1-Chloropropane)	0.2		3	ND	U	g	1	ND	U	g	5	ND	U	g
4-Methylphenol	0.6		9	9	J	n	2	9	J	n	14	11	J	n
N-Nitrosodi-n-propylamine	1.3		20	ND	U	g	4	ND	U	g	32	ND	U	g
Hexachloroethane	0.6		10	ND	U	g	2	ND	U	g	15	ND	U	g
Nitrobenzene	0.3		5	ND	U	g	7	ND	U	g	8	ND	U	g
Isophorone	0.5		9	ND	U	g	2	ND	U	g	14	ND	U	g
2-Nitrophenol	0.5		8	ND	U	g	6	ND	U	g	13	ND	U	g
2,4-Dimethylphenol	2.6		40	ND	U	g	8	ND	U	g	65	ND	U	g
Benzoic Acid	3.1		50	55	J	n	10	ND	U	g	80	ND	U	g
bis(2-Chloroethoxy) Methane	0.5		8	ND	U	g	2	ND	U	g	12	ND	U	g
2,4-Dichlorophenol	1.0		20	ND	U	g	3	ND	U	g	25	ND	U	g
1,2,4-Trichlorobenzene	0.2		3	ND	U	g	1	ND	U	g	5	ND	U	g
Naphthalene	0.2		4	170		g	1	160 E**	J	n	6	170		g
4-Chloroaniline	2.0		30	ND	U	g	6	ND	U	g	52	ND	U	g
Hexachlorobutadiene	0.7		10	ND	U	g	2	ND	U	g	19	ND	U	g
4-Chloro-3-Methylphenol	1.1		20	ND	U	g	17	ND	U	g	27	ND	U	g
2-Methylnaphthalene	0.6		10	160		g	2	180 E**	J	n	16	190		g
Hexachlorocyclopentadiene	2.9		50	ND	U	g	9	ND	U	g	74	ND	U	g
2,4,6-Trichlorophenol	1.5		20	ND	U	g	5	ND	U	g	38	ND	U	g
2,4,5-Trichlorophenol	1.3		20	ND	U	g	4	ND	U	g	32	ND	U	g
2-Chloronaphthalene	0.5		8	ND	U	g	2	ND	U	g	13	ND	U	g
2-Nitroaniline	1.3		20	ND	U	g	15	ND	U	g	33	ND	U	g
Dimethyl Phthalate	0.7		10	ND	U	g	2	ND	U	g	18	ND	U	g
Acenaphthylene	0.6		10	ND	U	g	2	ND	U	g	16	ND	U	g
3-Nitroaniline	5.4		90	ND	U	g	20	ND	U	g	140	ND	U	g
Acenaphthene	0.6		9	ND	U	g	2	2	J	n	15	ND	U	g
2,4-Dinitrophenol	8.4		100	ND	U	g	30	ND	U	g	210	ND	U	g
4-Nitrophenol	1.6		30	19		g	10	ND	U	g	46	46*		g
Dibenzofuran	0.6		10	ND	U	g	2	ND	U	g	16	ND	U	g
2,6-Dinitrotoluene	1.5		20	ND	U	g	5	ND	U	g	37	ND	U	g

** Analyte detected above linear calibration range.

Base: Kotzebue LRRS						Table 7.2.2.6									
Site: ST05						Analytical Data Summary									
Extraction Method: EPA Method 3520						EPA Method 8270									
Analytical Method: EPA Method 8270															
Matrix: Water															
Units: ug/L															
			Environmental Samples												
		Field ID:	ST05-MW8-01DL					ST05-MW9-01				ST05-MW9-01DL			
		Batch ID:	H792					H792				H792			
Parameters	MDL		PQL	Result	Validity	Comments	PQL	Result	Validity	Comments	PQL	Result	Validity	Comments	
				Dilution 5								Dilution 8			
2,4-Dinitrotoluene	1.3		20	ND	U	g	4	ND	U	g	34	ND	U	g	
Diethyl Phthalate	1.0		20	ND	U	g	5	ND	U	g	25	ND	U	g	
4-Chlorophenyl Phenyl Ether	0.5		8	ND	U	g	2	ND	U	g	13	ND	U	g	
Fluorene	0.5		8	4	J	n	2	3	J	n	13	ND	U	g	
4-Nitroaniline	4.5		70	ND	U	g	10	ND	U	g	110	ND	U	g	
4,6-Dinitro-2-Methylphenol	2.7		40	ND	U	g	9	ND	U	g	70	ND	U	g	
N-Nitrosodiphenylamine	0.6		10	ND	U	g	2	ND	U	g	15	ND	U	g	
4-Bromophenyl Phenyl Ether	0.6		9	ND	U	g	2	ND	U	g	14	ND	U	g	
Hexachlorobenzene	0.6		10	ND	U	g	2	ND	U	g	16	ND	U	g	
Pentachlorophenol	3.7		60	ND	U	g	10	ND	U	g	95	ND	U	g	
Phenanthrene	0.6		10	ND	U	g	2	2	J		16	ND	U	g	
Anthracene	0.7		10	ND	U	g	2	ND	U	g	18	ND	U	g	
di-n-butyl Phthalate	1.0		20	ND	U	g	3	ND	U	g	24	ND	U	g	
Fluroanthene	0.6		9	ND	U	g	2	ND	U	g	14	ND	U	g	
Pyrene	0.6		10	ND	U	g	2	ND	U	g	16	ND	U	g	
Butylbenzylphthalate	0.7		10	ND	U	g	2	ND	U	g	18	ND	U	g	
3,3'-Dichlorobenzidine	2.1		30	ND	U	g	7	ND	U	g	53	ND	U	g	
Benzo(a)anthracene	0.6		9	ND	U	g	2	ND	U	g	14	ND	U	g	
bis(2-Ethylhexyl) Phthalate	0.6		10	ND	U	g	2	ND	U	g	16	ND	U	g	
Chrysene	0.6		10	ND	U	g	2	ND	U	g	16	ND	U	g	
di-n-Octylphthalate	0.6		10	ND	U	g	2	ND	U	g	16	ND	U	g	
Benzo(b)fluoranthene	0.6		10	ND	U	g	2	ND	U	g	16	ND	U	g	
Benzo(k)fluoranthene	0.8		10	ND	U	g	3	ND	U	g	21	ND	U	g	
Benzo(a)pyrene	0.7		10	ND	U	g	2	ND	U	g	19	ND	U	g	
Indeno(1,2,3-c,d)pyrene	0.5		8	ND	U	g	2	ND	U	g	13	ND	U	g	
Dibenzo(a,h)anthracene	0.6		9	ND	U	g	2	ND	U	g	15	ND	U	g	
Benzo(g,h,i)perylene	0.5		9	ND	U	g	2	ND	U	g	14	ND	U	g	

Base: Kotzebue LRRS						Table 2.2.6								
Site: ST5						Analytical Data Summary								
Extraction Method: Not Applicable						EPA Method 9060								
Analytical Method: EPA Method 9060														
Matrix: Water														
Units: mg/L														
			Environmental Samples											
		Field ID:		ST05-MW2-01				ST05-MW4-01				ST05-MW5-01		
		Batch ID:		H785				H785				H785		
Parameters	MDL		PQL	Result	Validity	Comments	PQL	Result	Validity	Comments	PQL	Result	Validity	Comments
Total Organic Carbon	0.2		0.60	16.2		a	0.60	8.29		a	0.60	11.1		a

Base: Kotzebue LRRS				Table 2.2.6										
Site: ST5				Analytical Data Summary										
Extraction Method: Not Applicable				EPA Method 9060										
Analytical Method: EPA Method 9060														
Matrix: Water														
Units: mg/L														
			Environmental Samples											
		Field ID:		ST05-MW6-01										
		Batch ID:		H785										
Parameters	MDL		PQL	Result	Validity	Comments								
Total Organic Carbon	0.2		0.60	7.70		a								

Base: Kotzebue LRRS						Table 2.2.5								
Site: ST5						Analytical Data Summary								
Extraction Method: Not Applicable						EPA Method 9060								
Analytical Method: EPA Method 9060														
Matrix: Water														
Units: mg/L														
			Environmental Samples											
		Field ID:		ST05-MW3-01				ST05-MW7-01				ST05-MW8-01		
		Batch ID:		H792				H785				H785		
Parameters	MDL		PQL	Result	Validity	Comments	PQL	Result	Validity	Comments	PQL	Result	Validity	Comments
Total Organic Carbon	0.2		0.60	12.5		g	0.60	11.8		g	0.60	48.8		g

Base: Kotzebue LRRS						Table 2.2.5							
Site: ST5						Analytical Data Summary							
Extraction Method: Not Applicable						EPA Method 9060							
Analytical Method: EPA Method 9060													
Matrix: Water													
Units: mg/L													
			Environmental Samples										
		Field ID:		ST05-MW9-01									
		Batch ID:		H792									
Parameters	MDL		PQL	Result	Validity	Comments							
Total Organic Carbon	0.2		0.60	40.2		g							

ANALYTICAL DATA SUMMARY

SITE SS07-LAKE

Base: Kotzebue LRRS						Table 2.1.1								
Site: SS7						Analytical Data Summary								
Extraction Method: EPA Method 3550						Method AK102								
Analytical Method: Method AK102														
Matrix: Soil														
Units: mg/kg														
			Environmental Samples											
		Field ID:		SS07-SD1-01				SS07-SD2-01				SS07-SD3-01		
		Batch ID:		H686				H686				H686		
Parameters	MDL		PQL	Result	Validity	Comments	PQL	Result	Validity	Comments	PQL	Result	Validity	Comments
Diesel Hydrocarbons	0.9		11	60		g	19	440		g	15	160		g
AK102 Extended	NA		NA	NA	NA	NA	NA	2400		g	NA	NA	NA	NA

Base: Kotzebue LRRS
Site: SS7
Extraction Method: EPA Method 3050
Analytical Method: EPA Method 6010
Matrix: Soil
Units: mg/kg

Table 2.1.2
Analytical Data Summary
EPA Method 6010

			Environmental Samples								
		Field ID:		SS07-SD1-01				SS07-SD3-01			
		Batch ID:		H686				H686			
Parameters	MDL		PQL	Result	Validity	Comments	PQL	Result	Validity	Comments	
Aluminum	1.4		6	24000		g	5	11000		g	
Antimony	5		20	ND	U	c	10	ND	UJ	c	
Arsenic	4		20	10	J		10	ND	U	g	
Barium	0.6		3	300		g	2	180		g	
Beryllium	0.03		0.1	0.5		g	0.1	0.2		g	
Cadmium	0.8		3	ND	U	g	3	ND	U	g	
Calcium	3.1		13	5400		a	10	6800		a	
Chromium, total	0.28		1.2	38	J	a,c	0.9	14	J	a,c	
Cobalt	0.4		2	19		g	1	6		g	
Copper	0.11		0.5	33		a	0.4	19		a	
Iron	0.9		4	40000		g	3	17000		g	
Magnesium	2.0		8	9800		g	6	3700		g	
Manganese	0.5		2	380		g	1	270		g	
Molybdenum	0.31		1.3	ND	U	g	1.0	ND	U	g	
Nickel	0.8		3	51		g	3	21		g	
Potassium	23		100	2000		g	70	610		g	
Selenium	5		20	ND	U	g	20	ND	U	g	
Silver	0.19		0.8	0.7	J		0.6	ND	U	g	
Sodium	10		40	190		g	30	180		g	
Thallium	1.9		8	19		g	6	5	J		
Vanadium	0.18		0.7	53	J	c	0.6	20	J	c	
Zinc	0.33		1.5	110		a	1.2	1200		a	

Base: Kotzebue LRRS						Table 2.1.3								
Site: SS7						Analytical Data Summary								
Extraction Method: See below						EPA Method 7000								
Analytical Method: See below														
Matrix: Soil														
Units: mg/kg														
				Environmental Samples										
			Field ID:		SS07-SD1-01				SS07-SD3-01					
	EPA		Batch ID:		H686				H686					
Parameters	Method	MDL		PQL	Result	Validity	Comments	PQL	Result	Validity	Comments			
Lead	3050/7421	0.17		0.8	15*		g	0.5	33**		g			
Mercury	7471	0.014		0.05	0.06		g	0.05	0.06		g			
* Sample diluted at a factor of 5.00														
** Sample diluted at a factor of 10.00														

Base: Kotzebue LRRS

Site: SS7

Extraction Method: EPA Method 3550

Analytical Method: EPA Method 8081

Matrix: Soil

Units: mg/kg

Table 2.1.4
Analytical Data Summary
EPA Method 8081

				Environmental Samples											
			Field ID:		SS07-SS1		SS07-SS1				SS07-SS1DL		SS07-SS1DL		
			Batch ID:		H632		H632				H632		H632		
	DB-5	DB-608		DB-5	DB-5	DB-608	DB-608			DB-5	DB-5	DB-608	DB-608		
Parameters	MDL	MDL		PQL	Result	PQL	Result	Validity	Comments	PQL	Result Dilution 20	PQL	Result Dilution 20	Validity	Comments
alpha BHC	0.0001	0.0001		0.00021	ND	0.00018	ND	U	a	0.0041	ND	0.0037	ND	U	g
beta BHC	0.0001	0.0001		0.00031	0.00078	0.00029	ND	U	h	0.0063	ND	0.0058	ND	U	g
delta BHC	0.0001	0.0001		0.00032	0.0037	0.00024	0.0026	J	n	0.0064	ND	0.0048	ND	U	g
gamma BHC (Lindane)	0.0001	0.0001		0.00025	ND	0.00021	ND	U	g	0.0051	ND	0.0042	ND	U	g
Heptachlor	0.0001	0.0001		0.0003	ND	0.0003	ND	U	g	0.0058	ND	0.0057	ND	U	g
Aldrin	0.0001	0.0001		0.00020	ND	0.00026	ND	U	g	0.0040	ND	0.0052	ND	U	g
Heptachlor Epoxide	0.0001	0.0001		0.00025	0.018	0.00032	ND	U	a,h	0.0051	0.015	0.0064	ND	U	a,h
Endosulfan I	0.0001	0.0001		0.00037	ND	0.00037	ND	U	g	0.0074	ND	0.0074	ND	U	g
Dieldrin	0.0001	0.0002		0.0004	ND	0.0005	ND	U	g	0.0079	ND	0.0098	ND	U	g
4,4'-DDE	0.0001	0.0002		0.0003	0.069 E*	0.0005	0.069 E*	J	n	0.0065	0.092	0.0097	0.085		g
Endrin	0.0001	0.0001		0.0003	0.0033	0.0003	0.0018	J	a	0.0065	0.012	0.0067	ND	U	h
Endosulfan II	0.0002	0.0002		0.0005	0.0021	0.0005	ND	U	a,h	0.011	ND	0.010	ND	U	a
4,4'-DDD	0.0001	0.0001		0.0004	0.031	0.0005	0.17		a	0.0079	0.058	0.0094	0.15	J	a
Endosulfan Sulfate	0.0002	0.0002		0.0008	ND	0.0008	ND	U	g	0.016	ND	0.016	ND	U	g
4,4'-DDT	0.0002	0.0001		0.0008	0.84 E*	0.0004	0.95 E*	J	a,n	0.015	0.65	0.0086	0.65		a
Methoxychlor	0.0008	0.0011		0.0028	ND	0.0035	ND	U	g	0.056	ND	0.071	ND	U	g
Endrin Aldehyde	0.0002	0.0003		0.0007	ND	0.0009	ND	U	a	0.015	ND	0.017	ND	U	a
gamma-Chlordane	0.0001	0.0001		0.00018	ND	0.00026	ND	U	g	0.0035	ND	0.0052	ND	U	a
alpha-Chlordane	0.0001	0.0001		0.00021	0.0015	0.00037	ND	U	h	0.0041	ND	0.0074	ND	U	g
Toxaphene	0.007	0.009		0.02	ND	0.03	ND	U	g	0.48	ND	0.59	ND	U	g
Arochlor 1016	0.009	0.009		0.03	ND	0.03	ND	U	g	0.58	ND	0.56	ND	U	g
Arochlor 1242	0.005	0.008		0.02	ND	0.02	ND	U	g	0.35	ND	0.50	ND	U	g
Arochlor 1248	0.004	0.005		0.01	ND	0.02	ND	U	g	0.23	ND	0.31	ND	U	g
Arochlor 1254	0.011	0.009		0.03	ND	0.03	ND	U	g	0.70	ND	0.59	ND	U	g
Arochlor 1260	0.009	0.010		0.03	ND	0.01	ND	U	g	0.57	ND	0.30	ND	U	g
Arochlor 1221	0.011	0.010		0.03	ND	0.03	ND	U	g	0.69	ND	0.62	ND	U	g
Arochlor 1232	0.005	0.005		0.01	ND	0.00	ND	U	g	0.30	ND	0.03	ND	U	g

* Analyte detected above linear calibration range.

Base: Kotzebue LRRS						Table 2.1.4									
Site: SS7						Analytical Data Summary									
Extraction Method: EPA Method 3550						EPA Method 8081									
Analytical Method: EPA Method 8081															
Matrix: Soil															
Units: mg/kg															
				Environmental Samples											
			Field ID:		SS07-SS2		SS07-SS2				SS07-SS2DL		SS07-SS2DL		
			Batch ID:		H632		H632				H632		H632		
	DB-5	DB-608		DB-5	DB-5	DB-608	DB-608			DB-5	DB-5	DB-608	DB-608		
Parameters	MDL	MDL		PQL	Result	PQL	Result	Validity	Comments	PQL	Result Dilution 20	PQL	Result Dilution 20	Validity	Comments
alpha BHC	0.0001	0.0001		0.00021	ND	0.00019	ND	U	a	0.0042	ND	0.0038	ND	U	a
beta BHC	0.0001	0.0001		0.00032	0.0012	0.00030	ND	U	h	0.0064	ND	0.0060	ND	U	g
delta BHC	0.0001	0.0001		0.00033	0.0056	0.00025	0.0022	J	n	0.0066	ND	0.0049	ND	U	g
gamma BHC (Lindane)	0.0001	0.0001		0.00026	0.0012	0.00022	0.0012	J	n	0.0052	ND	0.0043	ND	U	g
Heptachlor	0.0001	0.0001		0.0003	ND	0.0003	ND	U	g	0.0059	ND	0.0059	ND	U	g
Aldrin	0.0001	0.0001		0.00021	ND	0.00027	ND	U	g	0.0041	ND	0.0053	ND	U	g
Heptachlor Epoxide	0.0001	0.0001		0.00026	0.036	0.00033	ND	U	a,h	0.0052	0.028	0.0066	ND	U	a,h
Endosulfan I	0.0001	0.0001		0.00038	0.0017	0.00038	ND	U	h	0.0076	ND	0.0076	ND	U	g
Dieldrin	0.0001	0.0002		0.0004	ND	0.0005	ND	U	g	0.0081	ND	0.010	ND	U	g
4,4'-DDE	0.0001	0.0002		0.0003	0.074 E*	0.0005	0.072 E*	J	n	0.0067	0.090	0.010	0.087		g
Endrin	0.0001	0.0001		0.0003	0.0062	0.0003	0.0020	J	n	0.0066	0.010	0.0069	ND	U	h
Endosulfan II	0.0002	0.0002		0.0005	ND	0.0005	ND	U	a	0.011	ND	0.011	ND	U	g
4,4'-DDD	0.0001	0.0001		0.0004	0.058	0.0005	0.21		a	0.0081	0.072	0.0096	0.17		a
Endosulfan Sulfate	0.0002	0.0002		0.0008	ND	0.0008	ND	U	g	0.017	ND	0.017	ND	U	g
4,4'-DDT	0.0002	0.0001		0.0008	0.86 E*	0.0004	0.98 E*	J	n	0.015	0.65	0.0088	0.67		a
Methoxychlor	0.0008	0.0011		0.0029	ND	0.0036	ND	U	g	0.057	ND	0.072	ND	U	g
Endrin Aldehyde	0.0002	0.0003		0.0007	0.0020	0.0009	ND	U	a,h	0.015	ND	0.018	ND	U	a
gamma-Chlordane	0.0001	0.0001		0.00018	0.0030	0.00027	ND	U	h	0.0036	ND	0.0053	ND	U	g
alpha-Chlordane	0.0001	0.0001		0.00021	ND	0.00038	ND	U	g	0.0042	ND	0.0076	ND	U	g
Toxaphene	0.007	0.009		0.02	ND	0.03	ND	U	g	0.50	ND	0.61	ND	U	g
Arochlor 1016	0.009	0.009		0.03	ND	0.03	ND	U	g	0.59	ND	0.57	ND	U	g
Arochlor 1242	0.005	0.008		0.02	ND	0.03	ND	U	g	0.36	ND	0.51	ND	U	g
Arochlor 1248	0.004	0.005		0.01	ND	0.02	ND	U	g	0.24	ND	0.32	ND	U	g
Arochlor 1254	0.011	0.009		0.04	ND	0.03	ND	U	g	0.71	ND	0.61	ND	U	g
Arochlor 1260	0.009	0.010		0.03	ND	0.02	ND	U	g	0.58	ND	0.30	ND	U	g
Arochlor 1221	0.011	0.010		0.04	ND	0.03	ND	U	g	0.71	ND	0.63	ND	U	g
Arochlor 1232	0.005	0.005		0.02	ND	0.00	ND	U	g	0.30	ND	0.30	ND	U	g
* Analyte detected above linear calibration range.															

Base: Kotzebue LRRS						Table 2.1.4									
Site: SS7						Analytical Data Summary									
Extraction Method: EPA Method 3550						EPA Method 8081									
Analytical Method: EPA Method 8081															
Matrix: Soil															
Units: mg/kg															
				Environmental Samples											
			Field ID:		SS07-SD1-01		SS07-SD1-01				SS07-SD2-01		SS07-SD2-01		
			Batch ID:		H686		H686				H686		H686		
	DB-5	DB-608		DB-5	DB-5	DB-608	DB-608			DB-5	DB-5	DB-608	DB-608		
Parameters	MDL	MDL		PQL	Result	PQL	Result	Validity	Comments	PQL	Result	PQL	Result	Validity	Comments
alpha BHC	0.0001	0.0001		0.00031	0.012	0.00028	0.0044	B J	a,n	0.00061	0.017	0.00054	0.0059	B J	n
beta BHC	0.0001	0.0001		0.00047	0.0044	0.00044	ND	U	h	0.00092	ND	0.00086	ND	U	g
delta BHC	0.0001	0.0001		0.00048	0.0051	0.00036	ND	U	a,h	0.00094	ND	0.00071	ND	U	a
gamma BHC (Lindane)	0.0001	0.0001		0.00038	0.0033	0.00032	0.0036	J	n	0.00075	0.010	0.00062	ND	U	h
Heptachlor	0.0001	0.0001		0.0004	0.0010	0.0004	ND	U	h	0.0009	0.0029	0.0008	ND	U	h
Aldrin	0.0001	0.0001		0.00030	ND	0.00039	ND	U	g	0.00059	ND	0.00077	ND	U	g
Heptachlor Epoxide	0.0001	0.0001		0.00038	0.033	0.00048	0.0020	B J	n	0.00075	0.027	0.00094	0.0046	B J	n
Endosulfan I	0.0023	0.0001		0.00056	0.0016	0.00056	ND	U	h	0.0011	ND	0.0011	ND	U	g
Dieldrin	0.0001	0.0002		0.0006	ND	0.0007	ND	U	g	0.0012	ND	0.0014	ND	U	g
4,4'-DDE	0.0001	0.0002		0.0005	0.0022	0.0007	0.0042	J	n	0.0010	ND	0.0014	ND	U	g
Endrin	0.0001	0.0001		0.0005	0.0016	0.0005	0.0070	B J	n	0.0010	0.0048	0.0010	0.011	J	a,n
Endosulfan II	0.0002	0.0002		0.0008	0.0080	0.0008	ND	U	a,h	0.0016	0.011	0.0005	ND	U	a,h
4,4'-DDD	0.0001	0.0001		0.0006	0.0063	0.0007	0.0042	J	n	0.0012	ND	0.0014	ND	U	g
Endosulfan Sulfate	0.0051	0.0002		0.0012	ND	0.0012	ND	U	g	0.0024	ND	0.0024	ND	U	g
4,4'-DDT	0.0002	0.0001		0.0011	0.011	0.0006	0.028	B J	n	0.0022	0.092	0.0013	0.022	J	a,n
Methoxychlor	0.0008	0.0011		0.0042	0.0047	0.0053	ND	U	h	0.0082	0.073	0.010	ND	U	h
Endrin Aldehyde	0.0002	0.0003		0.0011	0.0077	0.0013	ND	U	a,h	0.0021	0.013	0.0025	ND	U	a,h
gamma-Chlordane	0.0001	0.0001		0.00026	0.00015	0.00039	ND	U	a,h	0.00052	0.0015	0.00077	ND	U	a,h
alpha-Chlordane	0.0001	0.0001		0.00031	ND	0.00056	ND	U	g	0.00061	ND	0.0011	ND	U	g
Toxaphene	0.007	0.009		0.04	ND	0.04	ND	U	g	0.07	ND	0.09	ND	U	g
Arochlor 1016	0.009	0.009		0.04	ND	0.04	ND	U	g	0.08	ND	0.08	ND	U	g
Arochlor 1242	0.005	0.008		0.03	ND	0.04	ND	U	g	0.05	ND	0.07	ND	U	g
Arochlor 1248	0.004	0.005		0.02	ND	0.02	ND	U	g	0.03	ND	0.05	ND	U	g
Arochlor 1254	0.011	0.009		0.05	ND	0.04	ND	U	g	0.10	ND	0.09	ND	U	g
Arochlor 1260	0.009	0.010		0.04	ND	0.02	ND	U	g	0.08	ND	0.04	ND	U	g
Arochlor 1221	0.011	0.010		0.05	ND	0.05	ND	U	g	0.10	ND	0.09	ND	U	g
Arochlor 1232	0.005	0.005		0.02	ND	0.00	ND	U	g	0.04	ND	0.00	ND	U	g

Base: Kotzebue LRRS						Table 2.1.4									
Site: SS7						Analytical Data Summary									
Extraction Method: EPA Method 3550						EPA Method 8081									
Analytical Method: EPA Method 8081															
Matrix: Soil															
Units: mg/kg															
				Environmental Samples											
			Field ID:		SS07-SD3-01		SS07-SD3-01				SS07-SD3-01DL		SS07-SD3-01DL		
			Batch ID:		H686		H686				H686		H686		
	DB-5	DB-608		DB-5	DB-5	DB-608	DB-608			DB-5	DB-5	DB-608	DB-608		
Parameters	MDL	MDL		PQL	Result	PQL	Result	Validity	Comments	PQL	Result	PQL	Result	Validity	Comments
					Dilution 10		Diluton 10				Dilution 100		Dilution 100		
alpha BHC	0.0001	0.0001		0.0049	ND	0.0044	ND	U	a	0.049	ND	0.044	ND	U	a
beta BHC	0.0001	0.0001		0.0075	ND	0.0070	ND	U	g	0.075	ND	0.070	ND	U	g
delta BHC	0.0001	0.0001		0.0077	0.32	0.0057	ND	U	a,b,h	0.077	0.64	0.057	ND	U	a,b,h
gamma BHC (Lindane)	0.0001	0.0001		0.0061	0.032	0.0050	0.026	J	b n	0.061	ND	0.050	ND	U	g
Heptachlor	0.0001	0.0001		0.0069	ND	0.0068	ND	U	g	0.069	ND	0.069	ND	U	g
Aldrin	0.0001	0.0001		0.0048	ND	0.0062	ND	U	g	0.048	ND	0.062	ND	U	g
Heptachlor Epoxide	0.0001	0.0001		0.0061	2.3	0.0077	ND	U	a,b,h	0.061	2.3	0.077	ND	U	a,b,h
Endosulfan I	0.0023	0.0001		0.0088	ND	0.0088	ND	U	g	0.088	ND	0.088	ND	U	g
Dieldrin	0.0001	0.0002		0.0095	ND	0.012	ND	U	g	0.095	ND	0.12	ND	U	g
4,4'-DDE	0.0001	0.0002		0.0078	0.12	0.012	0.11	J	b	0.078	0.58	0.12	0.48	J	b
Endrin	0.0001	0.0001		0.0077	0.043	0.0080	0.023	J	a,b,n	0.077	0.19	0.080	ND	U	a,b,h
Endosulfan II	0.0002	0.0002		0.013	ND	0.012	ND	U	g	0.13	ND	0.12	ND	U	a
4,4'-DDD	0.0001	0.0001		0.0095	3.2 E*	0.011	3.1 E*	J	n	0.095	3.1	0.11	2.9	J	b
Endosulfan Sulfate	0.0051	0.0002		0.019	ND	0.019	ND	U	g	0.19	ND	0.19	ND	U	g
4,4'-DDT	0.0002	0.0001		0.018	0.45	0.010	0.39	J	a,b	0.18	0.78	0.10	0.59	J	a,b
Methoxychlor	0.0008	0.0011		0.067	ND	0.084	ND	U	g	0.67	ND	0.84	ND	U	g
Endrin Aldehyde	0.0002	0.0003		0.017	ND	0.021	ND	U	a	0.17	ND	0.21	ND	U	a
gamma-Chlordane	0.0001	0.0001		0.0042	ND	0.0062	ND	U	a	0.042	ND	0.062	ND	U	a
alpha-Chlordane	0.0001	0.0001		0.0049	0.032	0.0089	ND	U	b,h	0.049	0.057	0.089	ND	U	b,h
Toxaphene	0.007	0.009		0.58	ND	0.71	ND	U	g	5.8	ND	7.1	ND	U	g
Arochlor 1016	0.009	0.009		0.69	ND	0.67	ND	U	g	6.9	ND	6.7	ND	U	g
Arochlor 1242	0.005	0.008		0.42	ND	0.59	ND	U	g	4.2	ND	5.9	ND	U	g
Arochlor 1248	0.004	0.005		0.28	ND	0.37	ND	U	g	2.8	ND	3.7	ND	U	g
Arochlor 1254	0.011	0.009		0.83	ND	0.71	ND	U	g	8.3	ND	7.1	ND	U	g
Arochlor 1260	0.009	0.010		0.68	ND	0.36	ND	U	g	6.8	ND	3.6	ND	U	g
Arochlor 1221	0.011	0.010		0.82	ND	0.74	ND	U	g	8.2	ND	7.4	ND	U	g
Arochlor 1232	0.005	0.005		0.36	ND	0.04	ND	U	g	3.6	ND	0.36	ND	U	g

* Analyte detected above linear calibration range.

Base: Kotzebue LRRS						Table 2.1.5							
Site: SS7						Analytical Data Summary							
Extraction Method: EPA Method 8260						EPA Method 8260							
Analytical Method: EPA Method 8260													
Matrix: Soil													
Units: mg/kg													
			Environmental Samples										
		Field ID:		SS07-SD3-01									
		Batch ID:		H686									
Parameters	MDL		PQL	Result	Validity	Comments							
Chloromethane	0.0009		0.005	ND	U	g							
Bromomethane	0.0008		0.004	ND	U	g							
Vinyl Chloride	0.0010		0.005	ND	U	g							
Chloroethane	0.0010		0.005	ND	U	g							
Methylene Chloride	0.0009		0.005	0.003	B J	a							
Acetone	0.0039		0.02	0.16		g							
Carbon Disulfide	0.0005		0.003	ND	U	g							
1,1-Dichloroethene	0.0012		0.006	ND	U	g							
1,1-Dichloroethane	0.0004		0.002	ND	U	g							
trans-1,2-Dichloroethene	0.0009		0.005	ND	U	g							
cis-1,2-Dichloroethylene	0.0011		0.006	ND	U	g							
Chloroform	0.0005		0.002	ND	U	g							
1,2-Dichloroethane	0.0005		0.003	ND	U	g							
Methyl Ethyl Ketone (2-butanone)	0.0025		0.013	0.068		g							
1,1,1-Trichloroethane	0.0004		0.002	ND	U	g							
Carbon Tetrachloride	0.0010		0.005	ND	U	g							
Vinyl Acetate	0.0016		0.008	ND	U	g							
Bromodichloromethane	0.0006		0.003	ND	U	g							
1,2-Dichloropropane	0.0008		0.004	ND	U	g							
cis-1,3-Dichloropropene	0.0007		0.004	ND	U	g							
Trichloroethylene (tce)	0.0005		0.003	ND	U	g							
Dibromochloromethane	0.0003		0.002	ND	U	g							
1,1,2-Trichloroethane	0.0007		0.004	ND	U	g							
Benzene	0.0005		0.0025	ND	U	g							

Base: Kotzebue LRRS						Table 2.1.5								
Site: SS7						Analytical Data Summary								
Extraction Method: EPA Method 8260						EPA Method 8260								
Analytical Method: EPA Method 8260														
Matrix: Soil														
Units: mg/kg														
			Environmental Samples											
		Field ID:		SS07-SD3-01										
		Batch ID:		H686										
Parameters	MDL		PQL	Result	Validity	Comments								
trans-1,3-Dichloropropene	0.0005		0.003	ND	U	g								
2-Chloroethyl Vinyl Ether	0.0006		0.003	ND	U	g								
Bromoform	0.0013		0.007	ND	U	g								
Methyl Isobutyl Ketone	0.0015		0.008	ND	U	g								
2-Hexanone	0.0027		0.014	ND	U	g								
Tetrachloroethylene (pce)	0.0009		0.005	ND	U	g								
1,1,2,2-Tetrachloroethane	0.0009		0.0048	ND	U	g								
Toluene	0.0009		0.0048	ND	U	g								
Chlorobenzene	0.0007		0.004	ND	U	g								
Ethylbenzene	0.0004		0.0022	0.0007	J									
Styrene	0.0006		0.003	ND	U	g								
1,1,2-Trichloro-1,2,2-trifluoroethane	0.0007		0.004	ND	U	g								
Xylenes, total	0.0020		0.011	0.010	J									
1,1,1,2-Tetrachloroethane	0.0010		0.005	ND	U	g								
1,2,3-Trichloropropane	0.0023		0.012	ND	U	g								
Bromochloromethane	0.0007		0.004	ND	U	g								
1-Chlorohexane	0.0007		0.003	ND	U	g								
Bromobenzene	0.0007		0.0038	ND	U	g								

Base: Kotzebue LRRS
Site: SS7
Extraction Method: EPA Method 3550
Analytical Method: EPA Method 8270
Matrix: Soil
Units: mg/kg

Table 2.1.6
Analytical Data Summary
EPA Method 8270

Environmental Samples

Parameters	MDL	Field ID:		SS07-SD1-01			SS07-SD2-01				SS07-SD3-01			
		Batch ID:		H686			H686				H686			
			PQL	Result	Validity	Comments	PQL	Result	Validity	Comments	PQL	Result	Validity	Comments
Phenol	0.05		0.3	ND	U	g	0.5	ND	U	g	0.4	ND	U	g
bis(2-Chloroethyl) Ether	0.04		0.2	ND	U	g	0.4	ND	U	g	0.3	ND	U	g
2-Chlorophenol	0.07		0.4	ND	U	g	0.7	ND	U	g	0.5	ND	U	g
1,3-Dichlorobenzene	0.04		0.2	ND	U	g	0.4	ND	U	g	0.3	ND	U	g
1,4-Dichlorobenzene	0.03		0.1	ND	U	g	0.2	ND	U	g	0.2	ND	U	g
Benzyl Alcohol	0.05		0.3	ND	U	g	0.5	ND	U	g	0.4	ND	U	g
1,2-Dichlorobenzene	0.04		0.2	ND	U	g	0.4	ND	U	g	0.3	ND	U	g
2-Methylphenol	0.10		0.5	ND	U	g	0.9	ND	U	g	0.7	ND	U	g
2,2'-Oxybis (1-Chloropropane)	0.03		0.2	ND	U	g	0.3	ND	U	g	0.2	ND	U	g
4-Methylphenol	0.08		0.4	ND	U	g	0.7	ND	U	g	0.6	ND	U	g
N-Nitrosodi-n-propylamine	0.03		0.1	ND	U	g	0.3	ND	U	g	0.2	ND	U	g
Hexachloroethane	0.04		0.2	ND	U	g	0.4	ND	U	g	0.3	ND	U	g
Nitrobenzene	0.02		0.1	ND	U	g	0.2	ND	U	g	0.2	ND	U	g
Isophorone	0.03		0.2	ND	U	g	0.3	ND	U	g	0.2	ND	U	g
2-Nitrophenol	0.03		0.2	ND	U	g	0.3	ND	U	g	0.3	ND	U	g
2,4-Dimethylphenol	0.17		0.5	ND	U	g	0.9	ND	U	g	0.7	ND	U	g
Benzoic Acid	0.06		0.28	ND	U	g	0.54	0.66		g	0.43	0.76		g
bis(2-Chloroethoxy) Methane	0.04		0.2	ND	U	g	0.3	ND	U	g	0.3	ND	U	g
2,4-Dichlorophenol	0.04		0.2	ND	U	g	0.4	ND	U	g	0.3	ND	U	g
1,2,4-Trichlorobenzene	0.03		0.2	ND	U	g	0.3	ND	U	g	0.3	ND	U	g
Naphthalene	0.04		0.2	ND	U	g	0.3	ND	U	g	0.3	ND	U	g
4-Chloroaniline	0.10		0.5	ND	U	g	1.0	ND	U	g	0.8	ND	U	g
Hexachlorobutadiene	0.03		0.2	ND	U	g	0.3	ND	U	g	0.3	ND	U	g
4-Chloro-3-Methylphenol	0.06		0.3	ND	U	g	0.6	ND	U	g	0.4	ND	U	g
2-Methylnaphthalene	0.03		0.2	ND	U	g	0.3	ND	U	g	0.3	ND	U	g
Hexachlorocyclopentadiene	0.03		0.1	ND	U	g	0.2	ND	U	g	0.2	ND	U	g
2,4,6-Trichlorophenol	0.04		0.2	ND	U	g	0.4	ND	U	g	0.3	ND	U	g
2,4,5-Trichlorophenol	0.03		0.13	ND	U	g	0.24	ND	U	g	0.19	ND	U	g
2-Chloronaphthalene	0.03		0.2	ND	U	g	0.3	ND	U	g	0.3	ND	U	g
2-Nitroaniline	0.02		0.09	ND	U	g	0.18	ND	U	g	0.15	ND	U	g
Dimethyl Phthalate	0.04		0.2	ND	U	g	0.3	ND	U	g	0.3	ND	U	g
Acenaphthylene	0.04		0.2	ND	U	g	0.4	ND	U	g	0.3	ND	U	g
3-Nitroaniline	0.11		0.55	ND	U	g	1.1	ND	U	g	0.84	ND	U	g
Acenaphthene	0.03		0.2	ND	U	g	0.3	ND	U	g	0.2	ND	U	g
2,4-Dinitrophenol	0.09		0.44	ND	U	g	0.86	ND	U	g	0.68	ND	U	g
4-Nitrophenol	0.07		0.33	ND	U	g	0.64	ND	U	g	0.50	ND	U	g
Dibenzofuran	0.03		0.2	ND	U	g	0.3	ND	U	g	0.2	ND	U	g
2,6-Dinitrotoluene	0.04		0.2	ND	U	g	0.4	ND	U	g	0.3	ND	U	g

Base: Kotzebue LRRS
Site: SS7
Extraction Method: EPA Method 3550
Analytical Method: EPA Method 8270
Matrix: Soil
Units: mg/kg

Table 2.1.6
Analytical Data Summary
EPA Method 8270

			Environmental Samples											
		Field ID:		SS07-SD1-01				SS07-SD2-01				SS07-SD3-01		
		Batch ID:		H686				H686				H686		
Parameters	MDL		PQL	Result	Validity	Comments	PQL	Result	Validity	Comments	PQL	Result	Validity	Comments
2,4-Dinitrotoluene	0.02		0.1	ND	U	g	0.2	ND	U	g	0.2	ND	U	g
Diethyl Phthalate	0.04		0.2	ND	U	g	0.3	ND	U	g	0.3	ND	U	g
4-Chlorophenyl Phenyl Ether	0.02		0.1	ND	U	g	0.2	ND	U	g	0.2	ND	U	g
Fluorene	0.03		0.1	ND	U	g	0.3	ND	U	g	0.2	ND	U	g
4-Nitroaniline	0.13		0.66	ND	U	g	1.3	ND	U	g	1.0	ND	U	g
4,6-Dinitro-2-Methylphenol	0.09		0.44	ND	U	g	0.86	ND	U	g	0.68	ND	U	g
N-Nitrosodiphenylamine	0.08		0.4	ND	U	g	0.8	ND	U	g	0.6	ND	U	g
4-Bromophenyl Phenyl Ether	0.02		0.1	ND	U	g	0.2	ND	U	g	0.2	ND	U	g
Hexachlorobenzene	0.03		0.2	ND	U	g	0.3	ND	U	g	0.2	ND	U	g
Pentachlorophenol	0.03		0.16	ND	U	g	0.32	ND	U	g	0.25	ND	U	g
Phenanthrene	0.03		0.2	ND	U	g	0.3	ND	U	g	0.3	ND	U	g
Anthracene	0.04		0.2	ND	U	g	0.4	ND	U	g	0.3	ND	U	g
di-n-butyl Phthalate	0.06		0.3	ND	U	g	0.6	ND	U	g	0.5	ND	U	g
Fluroanthene	0.03		0.2	ND	U	g	0.3	ND	U	g	0.3	ND	U	g
Pyrene	0.03		0.1	ND	U	g	0.3	ND	U	g	0.2	ND	U	g
Butylbenzylphthalate	0.02		0.1	ND	U	g	0.2	ND	U	g	0.2	ND	U	g
3,3'-Dichlorobenzidine	0.06		0.3	ND	U	g	0.6	ND	U	g	0.4	ND	U	g
Benzo(a)anthracene	0.04		0.2	ND	U	g	0.4	ND	U	g	0.3	ND	U	g
bis(2-Ethylhexyl) Phthalate	0.04		0.2	ND	U	g	0.4	ND	U	g	0.3	ND	U	g
Chrysene	0.05		0.2	ND	U	g	0.4	ND	U	g	0.3	ND	U	g
di-n-Octylphthalate	0.02		0.1	ND	U	g	0.2	ND	U	g	0.2	ND	U	g
Benzo(b)fluoranthene	0.04		0.2	ND	U	g	0.4	ND	U	g	0.3	ND	U	g
Benzo(k)fluoranthene	0.07		0.4	ND	U	g	0.7	ND	U	g	0.6	ND	U	g
Benzo(a)pyrene	0.04		0.2	ND	U	g	0.4	ND	U	g	0.3	ND	U	g
Indeno(1,2,3-c,d)pyrene	0.03		0.1	ND	U	g	0.3	ND	U	g	0.2	ND	U	g
Dibenzo(a,h)anthracene	0.02		0.1	ND	U	g	0.2	ND	U	g	0.2	ND	U	g
Benzo(g,h,i)perylene	0.03		0.2	ND	U	g	0.3	ND	U	g	0.2	ND	U	g

Base: Kotzebue LRRS						Table 2.2.1								
Site: SS7						Analytical Data Summary								
Extraction Method: EPA Method 3510						Method AK102								
Analytical Method: Method AK102														
Matrix: Water														
Units: mg/L														
			Environmental Samples											
		Field ID:		SS07-SW1-01				SS07-SW2-01				SS07-SW3-01		
		Batch ID:		H686				H686				H686		
Parameters	MDL		PQL	Result	Validity	Comments	PQL	Result	Validity	Comments	PQL	Result	Validity	Comments
Diesel Hydrocarbons	0.06		0.11	ND	U	g	0.11	ND	U	g	0.11	ND	U	g

Base: Kotzebue LRRS						Table 2.2.2							
Site: SS7						Analytical Data Summary							
Extraction Method: EPA Method 3010 (unfiltered)/3005 (filtered)						EPA Method 6010							
Analytical Method: EPA Method 6010													
Matrix: Water													
Units: mg/L													
			Environmental Samples										
		Field ID:		SS07-SW3-01				SS07-SW3-01					
		Batch ID:		H686				H686					
Parameters	MDL		PQL	Result (Unfiltered)	Validity	Comments	PQL	Result (Filtered)	Validity	Comments			
Aluminum	0.01		0.03	0.08		g	0.03	0.05		g			
Antimony	0.03		0.1	ND	U	g	0.1	ND	U	g			
Arsenic	0.03		0.1	ND	U	g	0.1	ND	U	g			
Barium	0.004		0.01	0.05		g	0.01	0.04		g			
Beryllium	0.0002		0.001	ND	U	g	0.001	ND	U	g			
Cadmium	0.006		0.02	ND	U	g	0.03	ND	U	g			
Calcium	0.02		0.07	13		g	0.06	13		g			
Chromium, total	0.002		0.006	ND	U	g	0.006	ND	U	g			
Cobalt	0.003		0.01	ND	U	g	0.01	ND	U	g			
Copper	0.001		0.002	0.005		g	0.003	0.004		g			
Iron	0.006		0.02	1.8		g	0.03	1.4		g			
Magnesium	0.01		0.04	3.5		g	0.03	3.5		g			
Manganese	0.003		0.01	0.03		g	0.01	0.02		g			
Molybdenum	0.002		0.007	ND	U	g	0.006	ND	U	g			
Nickel	0.006		0.02	ND	U	g	0.03	ND	U	g			
Potassium	0.2		0.5	0.7		g	0.6	0.5	J				
Selenium	0.03		0.1	ND	U	g	0.1	ND	U	g			
Silver	0.001		0.004	ND	U	g	0.003	ND	U	g			
Sodium	0.07		0.2	2.7		g	0.2	2.9		g			
Thallium	0.01		0.04	ND	U	g	0.03	ND	U	g			
Vanadium	0.001		0.004	ND	U	g	0.003	ND	U	g			
Zinc	0.002		0.008	0.007	B J	a	0.0011	0.005	B J	a			

Base: Kotzebue LRRS						Table 2.2.3									
Site: SS7						Analytical Data Summary									
Extraction Method: See below						EPA Method 7000									
Analytical Method: See below															
Matrix: Water															
Units: mg/L															
				Environmental Samples											
			Field ID:		SS07-SW3-01				SS07-SW3-01						
	EPA		Batch ID:		H686				H686						
Parameters	Method	MDL		PQL	Result	Validity	Comments	PQL	Result	Validity	Comments				
					(Unfiltered)				(Filtered)						
Lead	3020/7421	0.001		0.004	ND	U	g	0.006	ND	U	g				
Mercury	7470	0.00002		0.00006	ND	U	g	0.00006	ND	U	g				

Base: Kotzebue LRRS						Table 2.2.4									
Site: SS7						Analytical Data Summary									
Extraction Method: EPA Method 3510						EPA Method 8081									
Analytical Method: EPA Method 8081															
Matrix: Water															
Units: ug/L															
				Environmental Samples											
			Field ID:		SS07-SW1-01		SS07-SW1-01				SS07-SW2-01		SS07-SW2-01		
			Batch ID:		H686		H686				H686		H686		
	DB-5	DB-608		DB-5	DB-5	DB-608	DB-608			DB-5	DB-5	DB-608	DB-608		
Parameters	MDL	MDL		PQL	Result	PQL	Result	Validity	Comments	PQL	Result	PQL	Result	Validity	Comments
alpha BHC	0.002	0.001		0.01	0.04	0.01	ND	U	a,h	0.01	0.04	0.01	ND	U	a,h
beta BHC	0.002	0.003		0.01	ND	0.01	ND	U	g	0.01	ND	0.01	ND	U	g
delta BHC	0.002	0.002		0.01	0.05	0.01	ND	U	a,h	0.01	ND	0.01	ND	U	a
gamma BHC (Lindane)	0.002	0.002		0.01	ND	0.01	ND	U	g	0.01	ND	0.01	ND	U	g
Heptachlor	0.004	0.004		0.01	ND	0.01	ND	U	g	0.01	ND	0.01	ND	U	g
Aldrin	0.005	0.010		0.02	ND	0.03	ND	U	g	0.02	ND	0.03	ND	U	g
Heptachlor Epoxide	0.003	0.002		0.01	0.12	0.01	0.02	B J	a,n	0.01	0.03	0.01	ND	U	a,h
Endosulfan I	0.004	0.004		0.01	ND	0.01	ND	U	g	0.01	ND	0.01	ND	U	g
Dieldrin	0.004	0.005		0.02	ND	0.01	ND	U	g	0.02	ND	0.01	ND	U	g
4,4'-DDE	0.009	0.010		0.029	ND	0.032	ND	U	g	0.029	ND	0.032	ND	U	g
Endrin	0.004	0.004		0.014	0.010	0.012	ND	U	h	0.014	ND	0.012	ND	U	g
Endosulfan II	0.007	0.005		0.021	0.022	0.015	ND	U	a,h	0.021	ND	0.015	ND	U	a
4,4'-DDD	0.005	0.004		0.017	ND	0.014	ND	U	a	0.017	ND	0.014	ND	U	a
Endosulfan Sulfate	0.003	0.003		0.01	ND	0.01	ND	U	g	0.01	ND	0.01	ND	U	g
4,4'-DDT	0.010	0.008		0.031	ND	0.026	ND	U	a	0.031	ND	0.026	ND	U	a
Methoxychlor	0.038	0.035		0.12	ND	0.11	ND	U	g	0.12	ND	0.11	ND	U	g
Endrin Aldehyde	0.010	0.010		0.031	ND	0.031	ND	U	a	0.031	ND	0.031	ND	U	a
gamma-Chlordane	0.003	0.003		0.01	ND	0.01	ND	U	a	0.01	ND	0.01	ND	U	a
alpha-Chlordane	0.003	0.004		0.01	ND	0.01	ND	U	g	0.01	ND	0.01	ND	U	g
Toxaphene	0.25	0.15		0.79	ND	0.46	ND	U	g	0.79	ND	0.46	ND	U	g
Arochlor 1016	0.3	0.3		0.9	ND	0.9	ND	U	g	0.9	ND	0.9	ND	U	g
Arochlor 1242	0.2	0.3		0.7	ND	1.0	ND	U	g	0.7	ND	1.0	ND	U	g
Arochlor 1248	0.3	0.2		0.8	ND	0.7	ND	U	g	0.8	ND	0.7	ND	U	g
Arochlor 1254	0.2	0.3		1.0	ND	1.0	ND	U	g	1.0	ND	1.0	ND	U	g
Arochlor 1260	0.3	0.3		1.0	ND	0.9	ND	U	g	1.0	ND	0.9	ND	U	g
Arochlor 1221	0.2	0.2		0.8	ND	0.8	ND	U	g	0.8	ND	0.8	ND	U	g
Arochlor 1232	0.3	0.3		0.8	ND	1.1	ND	U	g	0.8	ND	1.1	ND	U	g

Base: Kotzebue LRRS							Table 2.2.4							
Site: SS7							Analytical Data Summary							
Extraction Method: EPA Method 3510							EPA Method 8081							
Analytical Method: EPA Method 8081														
Matrix: Water														
Units: ug/L														
				Environmental Samples										
			Field ID:		SS07-SW3-01		SS07-SW3-01							
			Batch ID:		H686		H686							
	DB-5	DB-608		DB-5	DB-5	DB-608	DB-608							
Parameters	MDL	MDL		PQL	Result	PQL	Result	Validity	Comments					
alpha BHC	0.002	0.001		0.01	0.04	0.01	ND	U	a,h					
beta BHC	0.002	0.003		0.01	ND	0.01	ND	U	g					
delta BHC	0.002	0.002		0.01	ND	0.01	ND	U	a					
gamma BHC (Lindane)	0.002	0.002		0.01	ND	0.01	ND	U	g					
Heptachlor	0.004	0.004		0.01	ND	0.01	ND	U	g					
Aldrin	0.005	0.010		0.02	ND	0.03	ND	U	g					
Heptachlor Epoxide	0.003	0.002		0.01	0.01	0.01	ND	U	a,h					
Endosulfan I	0.004	0.004		0.01	ND	0.01	ND	U	g					
Dieldrin	0.004	0.005		0.02	ND	0.01	ND	U	g					
4,4'-DDE	0.009	0.010		0.029	ND	0.032	ND	U	g					
Endrin	0.004	0.004		0.014	0.008	0.012	ND	U	h					
Endosulfan II	0.007	0.005		0.021	ND	0.015	ND	U	a					
4,4'-DDD	0.005	0.004		0.017	ND	0.014	ND	U	a					
Endosulfan Sulfate	0.003	0.003		0.01	ND	0.01	ND	U	g					
4,4'-DDT	0.010	0.008		0.031	ND	0.026	ND	U	a					
Methoxychlor	0.038	0.035		0.12	ND	0.11	ND	U	g					
Endrin Aldehyde	0.010	0.010		0.031	ND	0.031	ND	U	a					
gamma-Chlordane	0.003	0.003		0.01	ND	0.01	ND	U	a					
alpha-Chlordane	0.003	0.004		0.01	ND	0.01	ND	U	g					
Toxaphene	0.25	0.15		0.79	ND	0.46	ND	U	g					
Arochlor 1016	0.3	0.3		0.9	ND	0.9	ND	U	g					
Arochlor 1242	0.2	0.3		0.7	ND	1.0	ND	U	g					
Arochlor 1248	0.3	0.2		0.8	ND	0.7	ND	U	g					
Arochlor 1254	0.2	0.3		1.0	ND	1.0	ND	U	g					
Arochlor 1260	0.3	0.3		1.0	ND	0.9	ND	U	g					
Arochlor 1221	0.2	0.2		0.8	ND	0.8	ND	U	g					
Arochlor 1232	0.3	0.3		0.8	ND	1.1	ND	U	g					

Base: Kotzebue LRRS						Table 2.2.5							
Site: SS7						Analytical Data Summary							
Extraction Method: EPA Method 8260						EPA Method 8260							
Analytical Method: EPA Method 8260													
Matrix: Water													
Units: ug/L													
			Environmental Samples										
		Field ID:		SS07-SW3-01									
		Batch ID:		H686									
Parameters	MDL		PQL	Result	Validity	Comments							
Chloromethane	1.03		3	ND	U	g							
Bromomethane	0.42		2	ND	U	g							
Vinyl Chloride	0.52		2	ND	U	g							
Chloroethane	0.59		2	ND	U	g							
Methylene Chloride	0.41		1	ND	U	g							
Acetone	2.90		9	ND	U	g							
Carbon Disulfide	0.40		2	ND	U	g							
1,1-Dichloroethene	0.71		2	ND	U	g							
1,1-Dichloroethane	0.50		2	ND	U	g							
trans-1,2-Dichloroethene	0.42		1	ND	U	g							
cis-1,2-Dichloroethylene	0.43		2	ND	U	g							
Chloroform	0.26		1	ND	U	g							
1,2-Dichloroethane	0.69		2	ND	U	g							
Methyl Ethyl Ketone (2-butano	0.52		2	ND	U	g							
1,1,1-Trichloroethane	0.54		2	ND	U	g							
Carbon Tetrachloride	0.42		2	ND	U	g							
Vinyl Acetate	0.52		2	ND	U	g							
Bromodichloromethane	0.44		2	ND	U	g							
1,2-Dichloropropane	0.48		2	ND	U	g							
cis-1,3-Dichloropropene	0.38		1	ND	U	g							
Trichloroethylene (tce)	0.18		1	ND	U	g							
Dibromochloromethane	0.24		1	ND	U	g							
1,1,2-Trichloroethane	0.42		1	ND	U	g							
Benzene	0.42		2	ND	U	g							

Base: Kotzebue LRRS						Table 2.2.6								
Site: SS7						Analytical Data Summary								
Extraction Method: EPA Method 8260						EPA Method 8260								
Analytical Method: EPA Method 8260														
Matrix: Water														
Units: ug/L														
			Environmental Samples											
		Field ID:		SS07-SW3-01										
		Batch ID:		H686										
Parameters	MDL		PQL	Result	Validity	Comments								
trans-1,3-Dichloropropene	0.48		2	ND	U	g								
2-Chloroethyl Vinyl Ether	0.82		3	ND	U	g								
Bromoform	0.48		2	ND	U	g								
Methyl Isobutyl Ketone	1.22		4	ND	U	g								
2-Hexanone	0.72		2	ND	U	g								
Tetrachloroethylene (pce)	0.30		1	ND	U	g								
1,1,2,2-Tetrachloroethane	0.56		2	ND	U	g								
Toluene	0.46		2	ND	U	g								
Chlorobenzene	0.20		1	ND	U	g								
Ethylbenzene	0.28		1	ND	U	g								
Styrene	0.08		1	ND	U	g								
1,1,2-Trichloro-1,2,2-trifluoroet	0.37		1	ND	U	g								
Xylenes, total	0.68		2	ND	U	g								
1,1,1,2-Tetrachloroethane	0.46		2	ND	U	g								
1,2,3-Trichloropropane	0.41		1	ND	U	g								
Bromochloromethane	0.24		1	ND	U	g								
1-Chlorohexane	1.68		5	ND	U	g								
Bromobenzene	0.43		2	ND	U	g								

Base: Kotzebue LRRS						Table 2.2.6								
Site: SS7						Analytical Data Summary								
Extraction Method: EPA Method 3520						EPA Method 8270								
Analytical Method: EPA Method 8270														
Matrix: Water														
Units: ug/L														
			Environmental Samples											
		Field ID:		SS07-SW1-01				SS07-SW2-01				SS07-SW3-01		
		Batch ID:		H686				H686				H686		
Parameters	MDL		PQL	Result	Validity	Comments	PQL	Result	Validity	Comments	PQL	Result	Validity	Comments
Phenol	0.9		3	ND	U	g	3	ND	U	g	3	ND	U	g
bis(2-Chloroethyl) Ether	1.9		6	ND	U	g	6	ND	U	g	6	ND	U	g
2-Chlorophenol	0.2		1	ND	U	g	1	ND	U	g	1	ND	U	g
1,3-Dichlorobenzene	0.3		1	ND	U	g	1	ND	U	g	1	ND	U	g
1,4-Dichlorobenzene	0.3		1	ND	U	g	1	ND	U	g	1	ND	U	g
Benzyl Alcohol	0.7		2	ND	U	g	2	ND	U	g	2	ND	U	g
1,2-Dichlorobenzene	0.2		1	ND	U	g	1	ND	U	g	1	ND	U	g
2-Methylphenol	0.2		1	ND	U	g	1	ND	U	g	1	ND	U	g
2,2'-Oxybis (1-Chloropropane)	0.2		1	ND	U	g	1	ND	U	g	1	ND	U	g
4-Methylphenol	0.6		2	ND	U	g	2	ND	U	g	2	ND	U	g
N-Nitrosodi-n-propylamine	1.3		4	ND	U	g	4	ND	U	g	4	ND	U	g
Hexachloroethane	0.6		2	ND	U	g	2	ND	U	g	2	ND	U	g
Nitrobenzene	0.3		1	ND	U	g	1	ND	U	g	1	ND	U	g
Isophorone	0.5		2	ND	U	g	2	ND	U	g	2	ND	U	g
2-Nitrophenol	0.5		2	ND	U	g	2	ND	U	g	2	ND	U	g
2,4-Dimethylphenol	2.6		8	ND	U	g	8	ND	U	g	8	ND	U	g
Benzoic Acid	3.1		10	ND	U	g	10	ND	U	g	10	ND	U	g
bis(2-Chloroethoxy) Methane	0.5		2	ND	U	g	2	ND	U	g	2	ND	U	g
2,4-Dichlorophenol	1.0		3	ND	U	g	3	ND	U	g	3	ND	U	g
1,2,4-Trichlorobenzene	0.2		1	ND	U	g	1	ND	U	g	1	ND	U	g
Naphthalene	0.2		1	ND	U	g	1	ND	U	g	1	ND	U	g
4-Chloroaniline	2.0		6	ND	U	g	6	ND	U	g	6	ND	U	g
Hexachlorobutadiene	0.7		2	ND	U	g	2	ND	U	g	2	ND	U	g
4-Chloro-3-Methylphenol	1.1		3	ND	U	g	3	ND	U	g	3	ND	U	g
2-Methylnaphthalene	0.6		2	ND	U	g	2	ND	U	g	2	ND	U	g
Hexachlorocyclopentadiene	2.9		9	ND	U	g	9	ND	U	g	9	ND	U	g
2,4,6-Trichlorophenol	1.5		5	ND	U	g	5	ND	U	g	5	ND	U	g
2,4,5-Trichlorophenol	1.3		4	ND	U	g	4	ND	U	g	4	ND	U	g
2-Chloronaphthalene	0.5		2	ND	U	g	2	ND	U	g	2	ND	U	g
2-Nitroaniline	1.3		4	ND	U	g	4	ND	U	g	4	ND	U	g
Dimethyl Phthalate	0.7		2	ND	U	g	2	ND	U	g	2	ND	U	g
Acenaphthylene	0.6		2	ND	U	g	2	ND	U	g	2	ND	U	g
3-Nitroaniline	5.4		20	ND	U	g	20	ND	U	g	20	ND	U	g
Acenaphthene	0.6		2	ND	U	g	2	ND	U	g	2	ND	U	g
2,4-Dinitrophenol	8.4		30	ND	U	g	30	ND	U	g	30	ND	U	g
4-Nitrophenol	1.6		5	ND	U	g	5	ND	U	g	5	ND	U	g
Dibenzofuran	0.6		2	ND	U	g	2	ND	U	g	2	ND	U	g
2,6-Dinitrotoluene	1.5		5	ND	U	g	5	ND	U	g	5	ND	U	g

Base: Kotzebue LRRS						Table 2.2.6								
Site: SS7						Analytical Data Summary								
Extraction Method: EPA Method 3520						EPA Method 8270								
Analytical Method: EPA Method 8270														
Matrix: Water														
Units: ug/L														
			Environmental Samples											
		Field ID:		SS07-SW1-01				SS07-SW2-01				SS07-SW3-01		
		Batch ID:		H686				H686				H686		
Parameters	MDL		PQL	Result	Validity	Comments	PQL	Result	Validity	Comments	PQL	Result	Validity	Comments
2,4-Dinitrotoluene	1.3		4	ND	U	g	4	ND	U	g	4	ND	U	g
Diethyl Phthalate	1.0		3	ND	U	g	3	ND	U	g	3	ND	U	g
4-Chlorophenyl Phenyl Ether	0.5		2	ND	U	g	2	ND	U	g	2	ND	U	g
Fluorene	0.5		2	ND	U	g	2	ND	U	g	2	ND	U	g
4-Nitroaniline	4.5		10	ND	U	g	10	ND	U	g	10	ND	U	g
4,6-Dinitro-2-Methylphenol	2.7		9	ND	U	g	9	ND	U	g	9	ND	U	g
N-Nitrosodiphenylamine	0.6		2	ND	U	g	2	ND	U	g	2	ND	U	g
4-Bromophenyl Phenyl Ether	0.6		2	ND	U	g	2	ND	U	g	2	ND	U	g
Hexachlorobenzene	0.6		2	ND	U	g	2	ND	U	g	2	ND	U	g
Pentachlorophenol	3.7		10	ND	U	g	10	ND	U	g	10	ND	U	g
Phenanthrene	0.6		2	ND	U	g	2	ND	U	g	2	ND	U	g
Anthracene	0.7		2	ND	U	g	2	ND	U	g	2	ND	U	g
di-n-butyl Phthalate	1.0		3	ND	U	g	3	ND	U	g	3	ND	U	g
Fluroanthene	0.6		2	ND	U	g	2	ND	U	g	2	ND	U	g
Pyrene	0.6		2	ND	U	g	2	ND	U	g	2	ND	U	g
Butylbenzylphthalate	0.7		2	ND	U	g	2	ND	U	g	2	ND	U	g
3,3'-Dichlorobenzidine	2.1		7	ND	U	g	7	ND	U	g	7	ND	U	g
Benzo(a)anthracene	0.6		2	ND	U	g	2	ND	U	g	2	ND	U	g
bis(2-Ethylhexyl) Phthalate	0.6		2	ND	U	g	2	ND	U	g	2	ND	U	g
Chrysene	0.6		2	ND	U	g	2	ND	U	g	2	ND	U	g
di-n-Octylphthalate	0.6		2	ND	U	g	2	ND	U	g	2	ND	U	g
Benzo(b)fluoranthene	0.6		2	ND	U	g	2	ND	U	g	2	ND	U	g
Benzo(k)fluoranthene	0.8		3	ND	U	g	3	ND	U	g	3	ND	U	g
Benzo(a)pyrene	0.7		2	ND	U	g	2	ND	U	g	2	ND	U	g
Indeno(1,2,3-c,d)pyrene	0.5		2	ND	U	g	2	ND	U	g	2	ND	U	g
Dibenzo(a,h)anthracene	0.6		2	ND	U	g	2	ND	U	g	2	ND	U	g
Benzo(g,h,i)perylene	0.5		2	ND	U	g	2	ND	U	g	2	ND	U	g

ANALYTICAL DATA SUMMARY
SITE SS08-BARRACKS PAD

Base: Kotzebue LRRS						Table 2.1								
Site: SS8						Analytical Data Summary								
Extraction Method: EPA Method 3550						Method AK102								
Analytical Method: Method AK102														
Matrix: Soil														
Units: mg/kg														
			Environmental Samples											
		Field ID:		SS08-SB1-1.0				SS08-SB1-1.0DL				SS08-SB2-1.0		
		Batch ID:		H599				H599				H599		
Parameters	MDL		PQL	Result	Validity	Comments	PQL	Result	Validity	Comments	PQL	Result	Validity	Comments
								Dilution 100						
Diesel Hydrocarbons	0.9		3.3	S*	NA	NA	330	33000		g	3.6	150		g
AK102 Extended	NA		NA	290		g	NA	NA	NA	NA	NA	NA	NA	NA
* No value reported due to saturation of the detector.														

Base: Kotzebue LRRS						Table 2.1								
Site: SS8						Analytical Data Summary								
Extraction Method: EPA Method 3550						Method AK102								
Analytical Method: Method AK102														
Matrix: Soil														
Units: mg/kg														
			Environmental Samples											
		Field ID:		SS08-SB3-1.0				SS08-SB4-1.5				SS08-SB4-1.5DUP		
		Batch ID:		H599				H599				H599		
Parameters	MDL		PQL	Result	Validity	Comments	PQL	Result	Validity	Comments	PQL	Result	Validity	Comments
Diesel Hydrocarbons	0.9		3.4	29		g	7.1	35		g	7.1	37		g

Base: Kotzebue LRRS						Table 2.1							
Site: SS8						Analytical Data Summary							
Extraction Method: EPA Method 3550						Method AK102							
Analytical Method: Method AK102													
Matrix: Soil													
Units: mg/kg													
			Environmental Samples										
		Field ID:		SS08-SB5-1.5									
		Batch ID:		H599									
Parameters	MDL		PQL	Result	Validity	Comments							
Diesel Hydrocarbons	0.9		3.2	3.3		g							

Base: Kotzebue LRRS

Site: SS8

Extraction Method: EPA Method 3050

Analytical Method: EPA Method 6010

Matrix: Soil

Units: mg/kg

Table 2.2
Analytical Data Summary
EPA Method 6010

			Environmental Samples								
		Field ID:		SS08-SB1-1.0				SS08-SB4-1.5			
		Batch ID:		H599				H599			
Parameters	MDL		PQL	Result	Validity	Comments	PQL	Result	Validity	Comments	
				Dilution 1.00				Dilution 1.00			
Aluminum	1.0		4	8800	J	a,c,k	3	7600		a,c	
Antimony	3		10	ND	UJ	c	10	ND	UJ	c	
Arsenic	3		10	10		g	10	7	J		
Barium	0.5		2	120		g	2	130		g	
Beryllium	0.02		0.1	0.2		g	0.1	0.1		g	
Cadmium	0.6		2	ND	U	g	2	ND	U	g	
Calcium	2.3		8	38000	J	c	7	22000	J	c	
Chromium, total	0.21		0.7	18		g	0.7	16		g	
Cobalt	0.3		1	7		g	1	8		g	
Copper	0.08		0.3	17		g	0.3	11		g	
Iron	0.6		2	16000	J	c	2	16000	J	c	
Magnesium	1.4		5	9500	J	c	5	11000	J	c	
Manganese	0.3		1	270	J	c	1	300	J	c	
Molybdenum	0.23		0.8	ND	U	g	0.7	ND	U	g	
Nickel	0.6		2	30		g	2	38		g	
Potassium	17		60	560		g	50	350		g	
Selenium	4		10	7	J		10	7	J		
Silver	0.14		0.5	ND	U	g	0.4	0.2	J		
Sodium	7		20	190		a	20	160		a	
Thallium	1.4		5	11		g	4	10		g	
Vanadium	0.13		0.5	29	J	c	0.4	29	J	c	
Zinc	0.24		0.9	140		g	0.9	31		g	

Base: Kotzebue LRRS					Table 2.3											
Site: SS8					Analytical Data Summary											
Extraction Method: See below					EPA Method 7000											
Analytical Method: See below																
Matrix: Soil																
Units: mg/kg																
				Environmental Samples												
			Field ID:		SS08-SB1-1.0				SS08-SB4-1.5							
	EPA		Batch ID:		H599				H599							
Parameters	Method	MDL		PQL	Result	Validity	Comments	PQL	Result	Validity	Comments					
Lead	3050/7421	0.13		0.4	13*	J	c	0.4	3.8**	J	c					
Mercury	7471	0.008		0.03	0.02	B J	a	0.02	0.02	B J	a					
* Sample diluted at a factor of 5.00.																
** Sample diluted at a factor of 2.00.																

Base: Kotzebue LRRS
Site: SS8
Extraction Method: EPA Method 3550
Analytical Method: EPA Method 8081
Matrix: Soil
Units: mg/kg

Table 2.4
Analytical Data Summary
EPA Method 8081

				Environmental Samples													
			Field ID:		SS08-SB1-1.0DL		SS08-SB1-1.0DL				SS08-SB2-1.0DL		SS08-SB2-1.0DL				
			Batch ID:		H599		H599				H599		H599				
	DB-5	DB-608		DB-5	DB-5	DB-608	DB-608			DB-5	DB-5	DB-608	DB-608				
Parameters	MDL	MDL		PQL	Result	PQL	Result	Validity	Comments	PQL	Result	PQL	Result	Validity	Comments		
					Dilution 10		Dilution 10				Dilution 10		Dilution 10				
alpha BHC	0.0001	0.0001		0.0023	0.016	0.0021	0.017	J	n	0.0026	0.018	0.0023	ND	U	h		
beta BHC	0.0001	0.0001		0.0035	0.012	0.0033	ND	U	h	0.0040	ND	0.0037	ND	U	g		
delta BHC	0.0001	0.0001		0.0036	ND	0.0027	ND	U	g	0.0041	0.022	0.0030	ND	U	h		
gamma BHC (Lindane)	0.0001	0.0001		0.0029	0.015	0.0024	ND	U	h	0.0032	ND	0.0027	ND	U	g		
Heptachlor	0.0001	0.0001		0.0033	ND	0.0032	ND	U	g	0.0037	ND	0.0036	ND	U	g		
Aldrin	0.0001	0.0001		0.0023	ND	0.0029	ND	U	g	0.0026	ND	0.0033	ND	U	g		
Heptachlor Epoxide	0.0001	0.0001		0.0029	ND	0.0036	ND	U	g	0.0032	0.038	0.0041	ND	U	h		
Endosulfan I	0.0001	0.0001		0.0042	ND	0.0042	ND	U	g	0.0047	ND	0.0047	ND	U	g		
Dieldrin	0.0001	0.0002		0.0045	ND	0.0055	ND	U	g	0.0050	ND	0.0062	ND	U	g		
4,4'-DDE	0.0001	0.0002		0.0037	0.032	0.0055	0.027		g	0.0041	0.054	0.0062	0.051		g		
Endrin	0.0001	0.0001		0.0036	0.011	0.0038	0.010	J	n	0.0041	0.0095	0.0043	0.0056	J	n		
Endosulfan II	0.0002	0.0002		0.0060	ND	0.0058	ND	U	g	0.0067	0.022	0.0065	ND	U	h		
4,4'-DDD	0.0001	0.0001		0.0045	0.12	0.0053	0.12		g	0.0050	0.18	0.0059	0.21		g		
Endosulfan Sulfate	0.0002	0.0002		0.0091	ND	0.0091	ND	U	g	0.010	ND	0.010	ND	U	g		
4,4'-DDT	0.0002	0.0001		0.0085	0.016	0.0049	0.015		g	0.0095	0.26	0.0055	0.26		g		
Methoxychlor	0.0008	0.0011		0.032	ND	0.040	ND	U	g	0.036	ND	0.045	ND	U	g		
Endrin Aldehyde	0.0002	0.0003		0.0082	ND	0.0097	ND	U	g	0.0093	ND	0.011	ND	U	g		
gamma-Chlordane	0.0001	0.0001		0.0020	0.0046	0.0029	ND	U	h	0.0022	ND	0.0033	ND	U	g		
alpha-Chlordane	0.0001	0.0001		0.0023	0.0073	0.0042	ND	U	h	0.0026	ND	0.0047	ND	U	g		
Toxaphene	0.007	0.009		0.27	ND	0.33	ND	U	g	0.31	ND	0.38	ND	U	g		
Arochlor 1016	0.009	0.009		0.32	ND	0.31	ND	U	g	0.37	ND	0.35	ND	U	g		
Arochlor 1242	0.005	0.008		0.20	ND	0.28	ND	U	g	0.22	ND	0.32	ND	U	g		
Arochlor 1248	0.004	0.005		0.13	ND	0.17	ND	U	g	0.15	ND	0.20	ND	U	g		
Arochlor 1254	0.011	0.009		0.39	ND	0.33	ND	U	g	0.44	ND	0.38	ND	U	g		
Arochlor 1260	0.009	0.010		0.32	ND	0.17	ND	U	g	0.36	ND	0.19	ND	U	g		
Arochlor 1221	0.011	0.010		0.39	ND	0.35	ND	U	g	0.44	ND	0.39	ND	U	g		
Arochlor 1232	0.005	0.005		0.17	ND	0.02	ND	U	g	0.19	ND	0.02	ND	U	g		

Base: Kotzebue LRRS
Site: SS8
Extraction Method: EPA Method 3550
Analytical Method: EPA Method 8081
Matrix: Soil
Units: mg/kg

Table 2.4
Analytical Data Summary
EPA Method 8081

				Environmental Samples												
			Field ID:		SS08-SB3-1.0		SS08-SB3-1.0				SS08-SB3-1.0DL		SS08-SB3-1.0DL			
			Batch ID:		H599		H599				H599		H599			
	DB-5	DB-608		DB-5	DB-5	DB-608	DB-608			DB-5	DB-5	DB-608	DB-608			
Parameters	MDL	MDL		PQL	Result	PQL	Result	Validity	Comments	PQL	Result Dilution 10	PQL	Result Dilution 10	Validity	Comments	
alpha BHC	0.0001	0.0001		0.00024	ND	0.00022	ND	U	g	0.0024	ND	0.0022	ND	U	g	
beta BHC	0.0001	0.0001		0.00037	ND	0.00034	ND	U	g	0.0037	ND	0.0034	ND	U	g	
delta BHC	0.0001	0.0001		0.00038	0.0012	0.00028	0.0017	J	n	0.0038	ND	0.0028	ND	U	g	
gamma BHC (Lindane)	0.0001	0.0001		0.00030	ND	0.00025	ND	U	g	0.0030	ND	0.0025	ND	U	g	
Heptachlor	0.0001	0.0001		0.0003	ND	0.0003	ND	U	g	0.0034	ND	0.0034	ND	U	g	
Aldrin	0.0001	0.0001		0.00024	ND	0.00031	ND	U	g	0.0024	ND	0.0031	ND	U	g	
Heptachlor Epoxide	0.0001	0.0001		0.00030	ND	0.00038	ND	U	g	0.0030	ND	0.0038	ND	U	g	
Endosulfan I	0.0001	0.0001		0.00044	ND	0.00044	ND	U	g	0.0044	ND	0.0044	ND	U	g	
Dieldrin	0.0001	0.0002		0.0005	ND	0.0006	ND	U	g	0.0047	ND	0.0058	ND	U	g	
4,4'-DDE	0.0001	0.0002		0.0004	0.012	0.0006	0.013		g	0.0038	0.037	0.0057	0.036		g	
Endrin	0.0001	0.0001		0.0004	0.0008	0.0004	0.0015	J	n	0.0038	0.0076	0.0040	ND	U	h	
Endosulfan II	0.0002	0.0002		0.0006	ND	0.0006	ND	U	g	0.0062	ND	0.0060	ND	U	g	
4,4'-DDD	0.0001	0.0001		0.0005	0.12 E*	0.0006	0.12 E*	J	n	0.0047	0.089	0.0055	0.10		g	
Endosulfan Sulfate	0.0002	0.0002		0.0010	ND	0.0010	ND	U	g	0.0095	ND	0.0095	ND	U	g	
4,4'-DDT	0.0002	0.0001		0.0009	0.059	0.0005	0.059		g	0.0088	0.056	0.0051	0.063		g	
Methoxychlor	0.0008	0.0011		0.0033	ND	0.0042	ND	U	g	0.033	ND	0.042	ND	U	g	
Endrin Aldehyde	0.0002	0.0003		0.0009	ND	0.0010	ND	U	g	0.0086	ND	0.010	ND	U	g	
gamma-Chlordane	0.0001	0.0001		0.00021	0.00024	0.00031	0.00068		g	0.0021	0.0016	0.0031	ND	U	h	
alpha-Chlordane	0.0001	0.0001		0.00024	ND	0.00044	ND	U	g	0.0024	ND	0.0044	ND	U	g	
Toxaphene	0.007	0.009		0.03	ND	0.03	ND	U	g	0.28	ND	0.35	ND	U	g	
Arochlor 1016	0.009	0.009		0.03	ND	0.03	ND	U	g	0.34	ND	0.33	ND	U	g	
Arochlor 1242	0.005	0.008		0.02	ND	0.03	ND	U	g	0.21	ND	0.29	ND	U	g	
Arochlor 1248	0.004	0.005		0.01	ND	0.02	ND	U	g	0.14	ND	0.18	ND	U	g	
Arochlor 1254	0.011	0.009		0.04	ND	0.03	ND	U	g	0.41	ND	0.35	ND	U	g	
Arochlor 1260	0.009	0.010		0.03	ND	0.02	ND	U	g	0.33	ND	0.17	ND	U	g	
Arochlor 1221	0.011	0.010		0.04	ND	0.04	ND	U	g	0.41	ND	0.36	ND	U	g	
Arochlor 1232	0.005	0.005		0.02	ND	0.02	ND	U	g	0.17	ND	0.02	ND	U	g	

* Analyte detected above linear calibration range.

Base: Kotzebue LRRS
Site: SS8
Extraction Method: EPA Method 3550
Analytical Method: EPA Method 8081
Matrix: Soil
Units: mg/kg

Table 2.4
Analytical Data Summary
EPA Method 8081

				Environmental Samples											
			Field ID:		SS08-SB4-1.5		SS08-SB4-1.5				SS08-SB5-1.5		SS08-SB5-1.5		
			Batch ID:		H599		H599				H599		H599		
	DB-5	DB-608		DB-5	DB-5	DB-608	DB-608			DB-5	DB-5	DB-608	DB-608		
Parameters	MDL	MDL		PQL	Result	PQL	Result	Validity	Comments	PQL	Result	PQL	Result	Validity	Comments
alpha BHC	0.0001	0.0001		0.00022	ND	0.00020	ND	U	g	0.00022	ND	0.00020	ND	U	g
beta BHC	0.0001	0.0001		0.00034	0.00074	0.00032	ND	U	h	0.00034	ND	0.00031	ND	U	g
delta BHC	0.0001	0.0001		0.00035	0.0018	0.00026	ND	U	h	0.00034	ND	0.00026	ND	U	g
gamma BHC (Lindane)	0.0001	0.0001		0.00028	ND	0.00023	ND	U	g	0.00027	ND	0.00023	ND	U	g
Heptachlor	0.0001	0.0001		0.0003	ND	0.0003	ND	U	g	0.0003	ND	0.0003	ND	U	g
Aldrin	0.0001	0.0001		0.00022	ND	0.00028	ND	U	g	0.00022	ND	0.00028	ND	U	g
Heptachlor Epoxide	0.0001	0.0001		0.00028	0.0018	0.00035	ND	U	h	0.00027	ND	0.00034	ND	U	g
Endosulfan I	0.0001	0.0001		0.00040	ND	0.00040	ND	U	g	0.00040	ND	0.00040	ND	U	g
Dieldrin	0.0001	0.0002		0.0004	ND	0.0005	ND	U	g	0.0004	ND	0.0005	ND	U	g
4,4'-DDE	0.0001	0.0002		0.0004	0.0066	0.0005	0.0072		g	0.0004	0.0044	0.0005	0.0046		g
Endrin	0.0001	0.0001		0.0004	ND	0.0004	ND	U	g	0.0003	0.0008	0.0004	0.0008		g
Endosulfan II	0.0002	0.0002		0.0006	ND	0.0006	ND	U	g	0.0006	ND	0.0006	ND	U	g
4,4'-DDD	0.0001	0.0001		0.0004	0.0079	0.0005	0.0095		g	0.0004	0.13 E*	0.0005	0.13 E*	J	n
Endosulfan Sulfate	0.0002	0.0002		0.0009	ND	0.0009	ND	U	g	0.0009	ND	0.0009	ND	U	g
4,4'-DDT	0.0002	0.0001		0.0008	0.0077	0.0005	0.011		g	0.0008	0.017	0.0005	0.016		g
Methoxychlor	0.0008	0.0011		0.0030	ND	0.0038	ND	U	g	0.0030	ND	0.0038	ND	U	g
Endrin Aldehyde	0.0002	0.0003		0.0008	ND	0.0009	ND	U	g	0.0008	ND	0.0009	ND	U	g
gamma-Chlordane	0.0001	0.0001		0.00019	ND	0.00028	ND	U	g	0.00019	ND	0.00028	ND	U	g
alpha-Chlordane	0.0001	0.0001		0.00022	ND	0.00040	ND	U	g	0.00022	ND	0.00040	ND	U	g
Toxaphene	0.007	0.009		0.03	ND	0.03	ND	U	g	0.03	ND	0.03	ND	U	g
Arochlor 1016	0.009	0.009		0.03	ND	0.03	ND	U	g	0.03	ND	0.03	ND	U	g
Arochlor 1242	0.005	0.008		0.02	ND	0.03	ND	U	g	0.02	ND	0.03	ND	U	g
Arochlor 1248	0.004	0.005		0.01	ND	0.02	ND	U	g	0.01	ND	0.02	ND	U	g
Arochlor 1254	0.011	0.009		0.04	ND	0.03	ND	U	g	0.04	ND	0.03	ND	U	g
Arochlor 1260	0.009	0.010		0.03	ND	0.02	ND	U	g	0.03	ND	0.02	ND	U	g
Arochlor 1221	0.011	0.010		0.04	ND	0.03	ND	U	g	0.04	ND	0.03	ND	U	g
Arochlor 1232	0.005	0.005		0.02	ND	0.02	ND	U	g	0.02	ND	0.02	ND	U	g

* Analyte detected above linear calibration range.

Base: Kotzebue LRRS
Site: SS8
Extraction Method: EPA Method 3550
Analytical Method: EPA Method 8081
Matrix: Soil
Units: mg/kg

Table 2.4
Analytical Data Summary
EPA Method 8081

			Environmental Samples							
			Field ID:	SS08-SB5-1.5DL		SS08-SB5-1.5DL				
			Batch ID:	H599		H599				
	DB-5	DB-608	DB-5	DB-5	DB-608	DB-608				
Parameters	MDL	MDL	PQL	Result	PQL	Result	Validity	Comments		
				Dilution 10		Dilution 10				
alpha BHC	0.0001	0.0001	0.0022	ND	0.0020	ND	U	g		
beta BHC	0.0001	0.0001	0.0034	ND	0.0031	ND	U	g		
delta BHC	0.0001	0.0001	0.0034	ND	0.0026	ND	U	g		
gamma BHC (Lindane)	0.0001	0.0001	0.0027	ND	0.0023	ND	U	g		
Heptachlor	0.0001	0.0001	0.0031	ND	0.0031	ND	U	g		
Aldrin	0.0001	0.0001	0.0022	ND	0.0028	ND	U	g		
Heptachlor Epoxide	0.0001	0.0001	0.0027	0.0015	0.0034	ND	U	h		
Endosulfan I	0.0001	0.0001	0.0040	ND	0.0040	ND	U	g		
Dieldrin	0.0001	0.0002	0.0042	ND	0.0053	ND	U	g		
4,4'-DDE	0.0001	0.0002	0.0035	0.026	0.0052	0.019		g		
Endrin	0.0001	0.0001	0.0035	0.0069	0.0036	ND	U	h		
Endosulfan II	0.0002	0.0002	0.0057	ND	0.0055	ND	U	g		
4,4'-DDD	0.0001	0.0001	0.0042	0.093	0.0050	0.098		g		
Endosulfan Sulfate	0.0002	0.0002	0.0087	ND	0.0087	ND	U	g		
4,4'-DDT	0.0002	0.0001	0.0081	0.028	0.0046	0.024		g		
Methoxychlor	0.0008	0.0011	0.030	ND	0.038	ND	U	g		
Endrin Aldehyde	0.0002	0.0003	0.0078	ND	0.0092	ND	U	g		
gamma-Chlordane	0.0001	0.0001	0.0019	ND	0.0028	ND	U	g		
alpha-Chlordane	0.0001	0.0001	0.0022	ND	0.0040	ND	U	g		
Toxaphene	0.007	0.009	0.26	ND	0.32	ND	U	g		
Arochlor 1016	0.009	0.009	0.31	ND	0.30	ND	U	g		
Arochlor 1242	0.005	0.008	0.19	ND	0.27	ND	U	g		
Arochlor 1248	0.004	0.005	0.12	ND	0.17	ND	U	g		
Arochlor 1254	0.011	0.009	0.37	ND	0.32	ND	U	g		
Arochlor 1260	0.009	0.010	0.30	ND	0.16	ND	U	g		
Arochlor 1221	0.011	0.010	0.37	ND	0.33	ND	U	g		
Arochlor 1232	0.005	0.005	0.16	ND	0.02	ND	U	g		

Base: Kotzebue LRRS						Table 2.5									
Site: SS8						Analytical Data Summary									
Extraction Method: EPA Method 8260						EPA Method 8260									
Analytical Method: EPA Method 8260															
Matrix: Soil															
Units: mg/kg															
			Environmental Samples												
		Field ID:		SS08-SB2-1.0				SS08-SB3-1.0				SS08-SB4-1.5			
		Batch ID:		H599				H599				H599			
Parameters	MDL		PQL	Result	Validity	Comments	PQL	Result	Validity	Comments	PQL	Result	Validity	Comments	
Chloromethane	0.0009		0.003	ND	U	g	0.003	ND	U	g	0.003	ND	U	g	
Bromomethane	0.0008		0.003	ND	U	g	0.003	ND	U	g	0.003	ND	U	g	
Vinyl Chloride	0.0010		0.003	ND	U	g	0.003	ND	U	g	0.003	ND	U	g	
Chloroethane	0.0010		0.004	ND	U	g	0.003	ND	U	g	0.003	ND	U	g	
Methylene Chloride	0.0009		0.003	0.002	B J	a	0.003	0.003	B J	a	0.003	0.002	B J	a	
Acetone	0.0039		0.01	ND	U	g	0.01	0.005	J		0.01	0.03		g	
Carbon Disulfide	0.0005		0.002	ND	U	g	0.002	ND	U	g	0.002	ND	U	g	
1,1-Dichloroethene	0.0012		0.004	ND	U	g	0.004	ND	U	g	0.004	ND	U	g	
1,1-Dichloroethane	0.0004		0.001	ND	U	g	0.001	ND	U	g	0.001	ND	U	g	
trans-1,2-Dichloroethene	0.0009		0.003	ND	U	g	0.003	ND	U	g	0.003	ND	U	g	
cis-1,2-Dichloroethylene	0.0011		0.004	ND	U	g	0.004	ND	U	g	0.004	ND	U	g	
Chloroform	0.0005		0.002	ND	U	g	0.002	ND	U	g	0.002	ND	U	g	
1,2-Dichloroethane	0.0005		0.002	ND	U	g	0.002	ND	U	g	0.002	ND	U	g	
Methyl Ethyl Ketone (2-butanone)	0.0025		0.009	ND	U	g	0.008	ND	U	g	0.008	ND	U	g	
1,1,1-Trichloroethane	0.0004		0.002	ND	U	g	0.001	ND	U	g	0.001	ND	U	g	
Carbon Tetrachloride	0.0010		0.004	ND	U	g	0.003	ND	U	g	0.003	ND	U	g	
Vinyl Acetate	0.0016		0.006	ND	U	g	0.005	ND	U	g	0.005	ND	U	g	
Bromodichloromethane	0.0006		0.002	ND	U	g	0.002	ND	U	g	0.002	ND	U	g	
1,2-Dichloropropane	0.0008		0.003	ND	U	g	0.003	ND	U	g	0.003	ND	U	g	
cis-1,3-Dichloropropene	0.0007		0.003	ND	U	g	0.002	ND	U	g	0.002	ND	U	g	
Trichloroethylene (tce)	0.0005		0.002	ND	U	g	0.002	ND	U	g	0.002	ND	U	g	
Dibromochloromethane	0.0003		0.001	ND	U	g	0.001	ND	U	g	0.001	ND	U	g	
1,1,2-Trichloroethane	0.0007		0.003	ND	U	g	0.002	ND	U	g	0.002	ND	U	g	
Benzene	0.0005		0.0017	ND	U	g	0.0016	ND	U	g	0.0016	ND	U	g	

Base: Kotzebue LRRS						Table 2.6									
Site: SS8						Analytical Data Summary									
Extraction Method: EPA Method 8260						EPA Method 8260									
Analytical Method: EPA Method 8260															
Matrix: Soil															
Units: mg/kg															
			Environmental Samples												
		Field ID:		SS08-SB2-1.0				SS08-SB3-1.0				SS08-SB4-1.5			
		Batch ID:		H599				H599				H599			
Parameters	MDL		PQL	Result	Validity	Comments	PQL	Result	Validity	Comments	PQL	Result	Validity	Comments	
trans-1,3-Dichloropropene	0.0005		0.002	ND	U	g	0.002	ND	U	g	0.002	ND	U	g	
2-Chloroethyl Vinyl Ether	0.0006		0.002	ND	U	g	0.002	ND	U	g	0.002	ND	U	g	
Bromoform	0.0013		0.005	ND	U	g	0.004	ND	U	g	0.004	ND	U	g	
Methyl Isobutyl Ketone	0.0015		0.006	ND	U	g	0.005	ND	U	g	0.005	ND	U	g	
2-Hexanone	0.0027		0.010	ND	U	g	0.009	ND	U	g	0.009	ND	U	g	
Tetrachloroethylene (pce)	0.0009		0.003	ND	U	g	0.003	ND	U	g	0.003	ND	U	g	
1,1,2,2-Tetrachloroethane	0.0009		0.0033	ND	U	g	0.0031	ND	U	g	0.0031	ND	U	g	
Toluene	0.0009		0.0033	ND	U	g	0.0031	ND	U	g	0.0031	ND	U	g	
Chlorobenzene	0.0007		0.003	ND	U	g	0.002	ND	U	g	0.002	ND	U	g	
Ethylbenzene	0.0004		0.0016	ND	U	g	0.0015	ND	U	g	0.0015	ND	U	g	
Styrene	0.0006		0.002	ND	U	g	0.002	ND	U	g	0.002	ND	U	g	
1,1,2-Trichloro-1,2,2-trifluoroethane	0.0007		0.003	ND	U	g	0.003	ND	U	g	0.003	ND	U	g	
Xylenes, total	0.0020		0.007	ND	U	g	0.007	ND	U	g	0.007	ND	U	g	
1,1,1,2-Tetrachloroethane	0.0010		0.004	ND	U	g	0.003	ND	U	g	0.003	ND	U	g	
1,2,3-Trichloropropane	0.0023		0.008	ND	U	g	0.008	ND	U	g	0.008	ND	U	g	
Bromochloromethane	0.0007		0.002	ND	U	g	0.002	ND	U	g	0.002	ND	U	g	
1-Chlorohexane	0.0007		0.002	ND	U	g	0.002	ND	U	g	0.002	ND	U	g	
Bromobenzene	0.0007		0.0027	ND	U	g	0.0025	ND	U	g	0.0025	ND	U	g	

Base: Kotzebue LRRS						Table 2.6												
Site: SS8						Analytical Data Summary												
Extraction Method: EPA Method 8260						EPA Method 8260												
Analytical Method: EPA Method 8260																		
Matrix: Soil																		
Units: mg/kg																		
			Environmental Samples															
		Field ID:		SS08-SB5-1.5														
		Batch ID:		H599														
Parameters	MDL		PQL	Result	Validity	Comments												
Chloromethane	0.0009		0.003	ND	U	g												
Bromomethane	0.0008		0.003	ND	U	g												
Vinyl Chloride	0.0010		0.003	ND	U	g												
Chloroethane	0.0010		0.003	ND	U	g												
Methylene Chloride	0.0009		0.003	0.003	B J	a												
Acetone	0.0039		0.01	0.004	J													
Carbon Disulfide	0.0005		0.002	ND	U	g												
1,1-Dichloroethene	0.0012		0.004	ND	U	g												
1,1-Dichloroethane	0.0004		0.001	ND	U	g												
trans-1,2-Dichloroethene	0.0009		0.003	ND	U	g												
cis-1,2-Dichloroethylene	0.0011		0.004	ND	U	g												
Chloroform	0.0005		0.002	ND	U	g												
1,2-Dichloroethane	0.0005		0.002	ND	U	g												
Methyl Ethyl Ketone (2-butanone)	0.0025		0.008	ND	U	g												
1,1,1-Trichloroethane	0.0004		0.001	ND	U	g												
Carbon Tetrachloride	0.0010		0.003	ND	U	g												
Vinyl Acetate	0.0016		0.005	ND	U	g												
Bromodichloromethane	0.0006		0.002	ND	U	g												
1,2-Dichloropropane	0.0008		0.003	ND	U	g												
cis-1,3-Dichloropropene	0.0007		0.002	ND	U	g												
Trichloroethylene (tce)	0.0005		0.002	ND	U	g												
Dibromochloromethane	0.0003		0.001	ND	U	g												
1,1,2-Trichloroethane	0.0007		0.002	ND	U	g												
Benzene	0.0005		0.0016	ND	U	g												

Base: Kotzebue LRRS				Table 2.5													
Site: SS8							Analytical Data Summary										
Extraction Method: EPA Method 8260							EPA Method 8260										
Analytical Method: EPA Method 8260																	
Matrix: Soil																	
Units: mg/kg																	
			Environmental Samples														
		Field ID:		SS08-SB5-1.5													
		Batch ID:		H599													
Parameters	MDL		PQL	Result	Validity	Comments											
trans-1,3-Dichloropropene	0.0005		0.002	ND	U	g											
2-Chloroethyl Vinyl Ether	0.0006		0.002	ND	U	g											
Bromoform	0.0013		0.004	ND	U	g											
Methyl Isobutyl Ketone	0.0015		0.005	ND	U	g											
2-Hexanone	0.0027		0.009	ND	U	g											
Tetrachloroethylene (pce)	0.0009		0.003	ND	U	g											
1,1,2,2-Tetrachloroethane	0.0009		0.0031	ND	U	g											
Toluene	0.0009		0.0031	ND	U	g											
Chlorobenzene	0.0007		0.002	ND	U	g											
Ethylbenzene	0.0004		0.0015	ND	U	g											
Styrene	0.0006		0.002	ND	U	g											
1,1,2-Trichloro-1,2,2-trifluoroethane	0.0007		0.003	ND	U	g											
Xylenes, total	0.0020		0.007	ND	U	g											
1,1,1,2-Tetrachloroethane	0.0010		0.003	ND	U	g											
1,2,3-Trichloropropane	0.0023		0.008	ND	U	g											
Bromochloromethane	0.0007		0.002	ND	U	g											
1-Chlorohexane	0.0007		0.002	ND	U	g											
Bromobenzene	0.0007		0.0025	ND	U	g											

Base: Kotzebue LRRS
Site: SS08
Extraction Method: EPA Method 3550
Analytical Method: EPA Method 8270
Matrix: Soil
Units: mg/kg

Table 4.2.1.6
Analytical Data Summary
EPA Method 8270

			Environmental Samples												
		Field ID:		SS08-SB1-1.0				SS08-SB2-1.0				SS08-SB3-1.0			
		Batch ID:		H599				H599				H599			
Parameters	MDL		PQL	Result	Validity	Comments	PQL	Result	Validity	Comments	PQL	Result	Validity	Comments	
Phenol	0.05		2.0	ND	U	g	0.2	ND	U	g	0.2	ND	U	g	
bis(2-Chloroethyl) Ether	0.04		1.5	ND	U	g	0.2	ND	U	g	0.2	ND	U	g	
2-Chlorophenol	0.07		2.7	ND	U	g	0.3	ND	U	g	0.3	ND	U	g	
1,3-Dichlorobenzene	0.04		1.4	ND	U	g	0.2	ND	U	g	0.1	ND	U	g	
1,4-Dichlorobenzene	0.03		0.9	ND	U	g	0.1	ND	U	g	0.1	ND	U	g	
Benzyl Alcohol	0.05		1.9	ND	U	g	0.2	ND	U	g	0.2	ND	U	g	
1,2-Dichlorobenzene	0.04		1.4	ND	U	g	0.2	ND	U	g	0.1	ND	U	g	
2-Methylphenol	0.10		3.7	ND	U	g	0.4	ND	U	g	0.4	ND	U	g	
2,2'-Oxybis (1-Chloropropane)	0.03		1.2	ND	U	g	0.1	ND	U	g	0.1	ND	U	g	
4-Methylphenol	0.08		2.9	ND	U	g	0.3	ND	U	g	0.3	ND	U	g	
N-Nitrosodi-n-propylamine	0.03		1.0	ND	U	g	0.1	ND	U	g	0.1	ND	U	g	
Hexachloroethane	0.04		1.5	ND	U	g	0.2	ND	U	g	0.2	ND	U	g	
Nitrobenzene	0.02		2.1	ND	U	g	0.1	ND	U	g	0.1	ND	U	g	
Isophorone	0.03		19	ND	U	g	0.1	ND	U	g	0.1	ND	U	g	
2-Nitrophenol	0.03		9.3	ND	U	g	0.1	ND	U	g	0.1	ND	U	g	
2,4-Dimethylphenol	0.17		3.5	ND	U	g	0.4	ND	U	g	0.4	ND	U	g	
Benzoic Acid	0.06		2.1	ND	U	g	0.23	ND	U	g	0.22	ND	U	g	
bis(2-Chloroethoxy) Methane	0.04		1.3	ND	U	g	0.1	ND	U	g	0.1	ND	U	g	
2,4-Dichlorophenol	0.04		8.1	ND	U	g	0.2	ND	U	g	0.2	ND	U	g	
1,2,4-Trichlorobenzene	0.03		1.2	ND	U	g	0.1	ND	U	g	0.1	ND	U	g	
Naphthalene	0.04		1.3	25		g	0.1	ND	U	g	0.1	ND	U	g	
4-Chloroaniline	0.10		3.8	ND	U	g	0.4	ND	U	g	0.4	ND	U	g	
Hexachlorobutadiene	0.03		1.3	ND	U	g	0.1	ND	U	g	0.1	ND	U	g	
4-Chloro-3-Methylphenol	0.06		2.2	ND	U	g	0.2	ND	U	g	0.2	ND	U	g	
2-Methylnaphthalene	0.03		1.3	59		g	0.1	ND	U	g	0.1	ND	U	g	
Hexachlorocyclopentadiene	0.03		0.9	ND	U	g	0.1	ND	U	g	0.1	ND	U	g	
2,4,6-Trichlorophenol	0.04		1.6	ND	U	g	0.2	ND	U	g	0.2	ND	U	g	
2,4,5-Trichlorophenol	0.03		0.94	ND	U	g	0.10	ND	U	g	0.10	ND	U	g	
2-Chloronaphthalene	0.03		1.2	ND	U	g	0.1	ND	U	g	0.1	ND	U	g	
2-Nitroaniline	0.02		0.71	8.7		g	0.08	ND	U	g	0.07	ND	U	g	
Dimethyl Phthalate	0.04		1.3	ND	U	g	0.1	ND	U	g	0.1	ND	U	g	
Acenaphthylene	0.04		1.5	ND	U	g	0.2	ND	U	g	0.2	ND	U	g	
3-Nitroaniline	0.11		4.1	ND	U	g	0.44	ND	U	g	0.43	ND	U	g	
Acenaphthene	0.03		1.1	2.8		g	0.1	ND	U	g	0.1	ND	U	g	
2,4-Dinitrophenol	0.09		3.3	ND	U	g	0.36	ND	U	g	0.34	ND	U	g	
4-Nitrophenol	0.07		2.5	ND	U	g	0.26	ND	U	g	0.25	ND	U	g	
Dibenzofuran	0.03		1.2	2.9		g	0.1	ND	U	g	0.1	ND	U	g	
2,6-Dinitrotoluene	0.04		1.6	ND	U	g	0.2	ND	U	g	0.2	ND	U	g	

Base: Kotzebue LRRS						Table 4.2.1.6									
Site: SS08						Analytical Data Summary									
Extraction Method: EPA Method 3550						EPA Method 8270									
Analytical Method: EPA Method 8270															
Matrix: Soil															
Units: mg/kg															
			Environmental Samples												
		Field ID:		SS08-SB1-1.0				SS08-SB2-1.0				SS08-SB3-1.0			
		Batch ID:		H599				H599				H599			
Parameters	MDL		PQL	Result	Validity	Comments	PQL	Result	Validity	Comments	PQL	Result	Validity	Comments	
2,4-Dinitrotoluene	0.02		3.4	ND	U	g	0.1	ND	U	g	0.1	ND	U	g	
Diethyl Phthalate	0.04		1.3	ND	U	g	0.1	ND	U	g	0.1	ND	U	g	
4-Chlorophenyl Phenyl Ether	0.02		0.8	ND	U	g	0.1	ND	U	g	0.1	ND	U	g	
Fluorene	0.03		1.1	6.3		g	0.1	ND	U	g	0.1	ND	U	g	
4-Nitroaniline	0.13		5.0	ND	U	g	0.53	ND	U	g	0.51	ND	U	g	
4,6-Dinitro-2-Methylphenol	0.09		3.3	ND	U	g	0.36	ND	U	g	0.34	ND	U	g	
N-Nitrosodiphenylamine	0.08		3.2	ND	U	g	0.3	ND	U	g	0.3	ND	U	g	
4-Bromophenyl Phenyl Ether	0.02		0.8	ND	U	g	0.1	ND	U	g	0.1	ND	U	g	
Hexachlorobenzene	0.03		1.2	ND	U	g	0.1	ND	U	g	0.1	ND	U	g	
Pentachlorophenol	0.03		1.2	ND	U	g	0.13	ND	U	g	0.13	ND	U	g	
Phenanthrene	0.03		1.2	2.0		g	0.1	ND	U	g	0.1	ND	U	g	
Anthracene	0.04		1.6	ND	U	g	0.2	ND	U	g	0.2	ND	U	g	
di-n-butyl Phthalate	0.06		2.3	ND	U	g	0.2	ND	U	g	0.2	ND	U	g	
Fluroanthene	0.03		1.3	1.2	J		0.1	ND	U	g	0.1	ND	U	g	
Pyrene	0.03		1.1	1.2		g	0.1	ND	U	g	0.1	ND	U	g	
Butylbenzylphthalate	0.02		0.8	ND	U	g	0.1	ND	U	g	0.1	ND	U	g	
3,3'-Dichlorobenzidine	0.06		2.2	ND	U	g	0.2	ND	U	g	0.2	ND	U	g	
Benzo(a)anthracene	0.04		1.5	ND	U	g	0.2	ND	U	g	0.1	ND	U	g	
bis(2-Ethylhexyl) Phthalate	0.04		1.5	ND	U	g	0.2	0.8		g	0.2	ND	U	g	
Chrysene	0.05		1.7	ND	U	g	0.2	ND	U	g	0.2	ND	U	g	
di-n-Octylphthalate	0.02		0.9	ND	U	g	0.1	ND	U	g	0.1	ND	U	g	
Benzo(b)fluoranthene	0.04		1.6	ND	U	g	0.2	ND	U	g	0.2	ND	U	g	
Benzo(k)fluoranthene	0.07		2.8	ND	U	g	0.3	ND	U	g	0.3	ND	U	g	
Benzo(a)pyrene	0.04		1.5	ND	U	g	0.2	ND	U	g	0.2	ND	U	g	
Indeno(1,2,3-c,d)pyrene	0.03		1.0	ND	U	g	0.1	ND	U	g	0.1	ND	U	g	
Dibenzo(a,h)anthracene	0.02		0.8	ND	U	g	0.1	ND	U	g	0.1	ND	U	g	
Benzo(g,h,i)perylene	0.03		1.2	ND	U	g	0.1	ND	U	g	0.1	ND	U	g	

Base: Kotzebue LRRS
Site: SS08
Extraction Method: EPA Method 3550
Analytical Method: EPA Method 8270
Matrix: Soil
Units: mg/kg

Table 4.2.1.6
Analytical Data Summary
EPA Method 8270

			Environmental Samples							
		Field ID:		SS08-SB4-1.5				SS08-SB5-1.5		
		Batch ID:		H599				H599		
Parameters	MDL		PQL	Result	Validity	Comments	PQL	Result	Validity	Comments
Phenol	0.05		0.2	ND	U	g	0.2	ND	U	g
bis(2-Chloroethyl) Ether	0.04		0.1	ND	U	g	0.1	ND	U	g
2-Chlorophenol	0.07		0.3	ND	U	g	0.3	ND	U	g
1,3-Dichlorobenzene	0.04		0.1	ND	U	g	0.1	ND	U	g
1,4-Dichlorobenzene	0.03		0.1	ND	U	g	0.1	ND	U	g
Benzyl Alcohol	0.05		0.2	ND	U	g	0.2	ND	U	g
1,2-Dichlorobenzene	0.04		0.1	ND	U	g	0.1	ND	U	g
2-Methylphenol	0.10		0.3	ND	U	g	0.3	ND	U	g
2,2'-Oxybis (1-Chloropropane)	0.03		0.1	ND	U	g	0.1	ND	U	g
4-Methylphenol	0.08		0.3	ND	U	g	0.3	ND	U	g
N-Nitrosodi-n-propylamine	0.03		0.1	ND	U	g	0.1	ND	U	g
Hexachloroethane	0.04		0.1	ND	U	g	0.1	ND	U	g
Nitrobenzene	0.02		0.1	ND	U	g	0.1	ND	U	g
Isophorone	0.03		0.1	ND	U	g	0.1	ND	U	g
2-Nitrophenol	0.03		0.1	ND	U	g	0.1	ND	U	g
2,4-Dimethylphenol	0.17		0.3	ND	U	g	0.3	ND	U	g
Benzoic Acid	0.06		0.20	ND	U	g	0.20	ND	U	g
bis(2-Chloroethoxy) Methane	0.04		0.1	ND	U	g	0.1	ND	U	g
2,4-Dichlorophenol	0.04		0.2	ND	U	g	0.2	ND	U	g
1,2,4-Trichlorobenzene	0.03		0.1	ND	U	g	0.1	ND	U	g
Naphthalene	0.04		0.1	ND	U	g	0.1	ND	U	g
4-Chloroaniline	0.10		0.4	ND	U	g	0.4	ND	U	g
Hexachlorobutadiene	0.03		0.1	ND	U	g	0.1	ND	U	g
4-Chloro-3-Methylphenol	0.06		0.2	ND	U	g	0.2	ND	U	g
2-Methylnaphthalene	0.03		0.1	ND	U	g	0.1	ND	U	g
Hexachlorocyclopentadiene	0.03		0.1	ND	U	g	0.1	ND	U	g
2,4,6-Trichlorophenol	0.04		0.1	ND	U	g	0.2	ND	U	g
2,4,5-Trichlorophenol	0.03		0.09	ND	U	g	0.09	ND	U	g
2-Chloronaphthalene	0.03		0.1	ND	U	g	0.1	ND	U	g
2-Nitroaniline	0.02		0.07	ND	U	g	0.07	ND	U	g
Dimethyl Phthalate	0.04		0.1	ND	U	g	0.1	ND	U	g
Acenaphthylene	0.04		0.1	ND	U	g	0.1	ND	U	g
3-Nitroaniline	0.11		0.39	ND	U	g	0.39	ND	U	g
Acenaphthene	0.03		0.1	ND	U	g	0.1	ND	U	g
2,4-Dinitrophenol	0.09		0.31	ND	U	g	0.32	ND	U	g
4-Nitrophenol	0.07		0.23	ND	U	g	0.24	ND	U	g
Dibenzofuran	0.03		0.1	ND	U	g	0.1	ND	U	g
2,6-Dinitrotoluene	0.04		0.1	ND	U	g	0.2	ND	U	g

Base: Kotzebue LRRS
Site: SS08
Extraction Method: EPA Method 3550
Analytical Method: EPA Method 8270
Matrix: Soil
Units: mg/kg

Table 4.2.1.6
Analytical Data Summary
EPA Method 8270

			Environmental Samples							
		Field ID:	SS08-SB4-1.5				SS08-SB5-1.5			
		Batch ID:	H599				H599			
Parameters	MDL	PQL	Result	Validity	Comments	PQL	Result	Validity	Comments	
2,4-Dinitrotoluene	0.02	0.1	ND	U	g	0.1	ND	U	g	
Diethyl Phthalate	0.04	0.1	ND	U	g	0.1	ND	U	g	
4-Chlorophenyl Phenyl Ether	0.02	0.1	ND	U	g	0.1	ND	U	g	
Fluorene	0.03	0.1	ND	U	g	0.1	ND	U	g	
4-Nitroaniline	0.13	0.47	ND	U	g	0.47	ND	U	g	
4,6-Dinitro-2-Methylphenol	0.09	0.31	ND	U	g	0.32	ND	U	g	
N-Nitrosodiphenylamine	0.08	0.3	ND	U	g	0.3	ND	U	g	
4-Bromophenyl Phenyl Ether	0.02	0.1	ND	U	g	0.1	ND	U	g	
Hexachlorobenzene	0.03	0.1	ND	U	g	0.1	ND	U	g	
Pentachlorophenol	0.03	0.12	ND	U	g	0.12	ND	U	g	
Phenanthrene	0.03	0.1	ND	U	g	0.1	ND	U	g	
Anthracene	0.04	0.2	ND	U	g	0.2	ND	U	g	
di-n-butyl Phthalate	0.06	0.2	ND	U	g	0.2	ND	U	g	
Fluroanthene	0.03	0.1	ND	U	g	0.1	ND	U	g	
Pyrene	0.03	0.1	ND	U	g	0.1	ND	U	g	
Butylbenzylphthalate	0.02	0.1	ND	U	g	0.1	ND	U	g	
3,3'-Dichlorobenzidine	0.06	0.2	ND	U	g	0.2	ND	U	g	
Benzo(a)anthracene	0.04	0.1	ND	U	g	0.1	ND	U	g	
bis(2-Ethylhexyl) Phthalate	0.04	0.1	ND	U	g	0.1	ND	U	g	
Chrysene	0.05	0.2	ND	U	g	0.2	ND	U	g	
di-n-Octylphthalate	0.02	0.1	ND	U	g	0.1	ND	U	g	
Benzo(b)fluoranthene	0.04	0.2	ND	U	g	0.2	ND	U	g	
Benzo(k)fluoranthene	0.07	0.3	ND	U	g	0.3	ND	U	g	
Benzo(a)pyrene	0.04	0.1	ND	U	g	0.1	ND	U	g	
Indeno(1,2,3-c,d)pyrene	0.03	0.1	ND	U	g	0.1	ND	U	g	
Dibenzo(a,h)anthracene	0.02	0.1	ND	U	g	0.1	ND	U	g	
Benzo(g,h,i)perylene	0.03	0.1	ND	U	g	0.1	ND	U	g	

ANALYTICAL DATA SUMMARY
SITE SS11-FUEL SPILL

Base: Kotzebue LRRS						Table 2.1.1								
Site: SS11						Analytical Data Summary								
Extraction Method: EPA Method 3550						Method AK102								
Analytical Method: Method AK102														
Matrix: Soil														
Units: mg/kg														
			Environmental Samples											
		Field ID:		SS11-SB1-1.0				SS11-SB2-0.5				SS11-SB3-1.0		
		Batch ID:		H590				H590				H590		
Parameters	MDL		PQL	Result	Validity	Comments	PQL	Result	Validity	Comments	PQL	Result	Validity	Comments
Diesel Hydrocarbons	0.9		3.1	5.0		g	4.2	31		g	3.0	29		g

Base: Kotzebue LRRS						Table 2.1.1							
Site: SS11						Analytical Data Summary							
Extraction Method: EPA Method 3550						Method AK102							
Analytical Method: Method AK102													
Matrix: Soil													
Units: mg/kg													
			Environmental Samples										
		Field ID:		SS11-SB4-0.5									
		Batch ID:		H590									
Parameters	MDL		PQL	Result	Validity	Comments							
Diesel Hydrocarbons	0.9		3.0	6.6		g							

Base: Kotzebue LRRS						Table 2.1.1							
Site: SS11						Analytical Data Summary							
Extraction Method: EPA Method 3550						Method AK102							
Analytical Method: Method AK102													
Matrix: Soil													
Units: mg/kg													
			Environmental Samples										
		Field ID:		SS11-SD1									
		Batch ID:		H886									
Parameters	MDL		PQL	Result	Validity	Comments							
Diesel Hydrocarbons	0.9		10	710		g							

Base: Kotzebue LRRS						Table 2.1.2									
Site: SS11						Analytical Data Summary									
Extraction Method: EPA Method 3550						EPA Method 8081									
Analytical Method: EPA Method 8081															
Matrix: Soil															
Units: mg/kg															
				Environmental Samples											
			Field ID:		SS11-SB1-1.0		SS11-SB1-1.0				SS11-SB2-0.5		SS11-SB2-0.5		
			Batch ID:		H590		H590				H590		H590		
	DB-5	DB-608		DB-5	DB-5	DB-608	DB-608				DB-5	DB-608	DB-608		
Parameters	MDL	MDL		PQL	Result	PQL	Result	Validity	Comments	PQL	Result	PQL	Result	Validity	Comments
alpha BHC	0.0001	0.0001		0.00022	ND	0.00020	ND	U	g	0.00030	0.0092	0.00027	ND	U	h
beta BHC	0.0001	0.0001		0.00033	0.0011	0.00031	ND	U	h	0.00046	0.0028	0.00043	ND	U	h
delta BHC	0.0001	0.0001		0.00034	0.0018	0.00026	ND	U	h	0.00047	0.016	0.00035	ND	U	h
gamma BHC (Lindane)	0.0001	0.0001		0.00027	ND	0.00022	ND	U	g	0.00037	0.0023	0.00031	ND	U	h
Heptachlor	0.0001	0.0001		0.0003	ND	0.0003	ND	U	g	0.0004	ND	0.0004	ND	U	g
Aldrin	0.0001	0.0001		0.00021	0.00050	0.00028	ND	U	h	0.00030	ND	0.00038	ND	U	g
Heptachlor Epoxide	0.0001	0.0001		0.00027	0.0033	0.00034	ND	U	h	0.00037	0.17	0.00047	ND	U	h
Endosulfan I	0.0001	0.0001		0.00039	ND	0.00039	ND	U	g	0.00054	ND	0.00054	ND	U	g
Dieldrin	0.0001	0.0002		0.0004	ND	0.0005	ND	U	g	0.0006	ND	0.0007	ND	U	g
4,4'-DDE	0.0001	0.0002		0.0003	0.0024	0.0005	0.0020		g	0.0005	0.0090	0.0007	0.010		g
Endrin	0.0001	0.0001		0.0003	0.0013	0.0004	ND	U	h	0.0005	ND	0.0005	ND	U	g
Endosulfan II	0.0002	0.0002		0.0006	ND	0.0005	ND	U	g	0.0008	0.0096	0.0008	ND	U	h
4,4'-DDD	0.0001	0.0001		0.0004	0.0023	0.0005	0.0016		g	0.0006	0.0064	0.0007	0.011		g
Endosulfan Sulfate	0.0002	0.0002		0.0009	ND	0.0009	ND	U	g	0.0012	ND	0.0012	ND	U	g
4,4'-DDT	0.0002	0.0001		0.0008	0.0042	0.0005	0.0081	J	n	0.0011	0.085	0.0006	0.083		g
Methoxychlor	0.0008	0.0011		0.0030	ND	0.0037	ND	U	g	0.0041	0.0030	0.0052	ND	U	h
Endrin Aldehyde	0.0002	0.0003		0.0008	0.0007	0.0009	ND	U	h	0.0011	0.0041	0.0013	ND	U	h
gamma-Chlordane	0.0001	0.0001		0.00019	0.00022	0.00028	ND	U	h	0.00026	0.0014	0.00038	ND	U	h
alpha-Chlordane	0.0001	0.0001		0.00022	ND	0.00039	ND	U	g	0.00030	0.0020	0.00054	ND	U	h
Toxaphene	0.007	0.009		0.03	ND	0.03	ND	U	g	0.04	ND	0.04	ND	U	g
Arochlor 1016	0.009	0.009		0.03	ND	0.03	ND	U	g	0.04	ND	0.04	ND	U	g
Arochlor 1242	0.005	0.008		0.02	ND	0.03	ND	U	g	0.03	ND	0.04	ND	U	g
Arochlor 1248	0.004	0.005		0.01	ND	0.02	ND	U	g	0.02	ND	0.02	ND	U	g
Arochlor 1254	0.011	0.009		0.04	ND	0.03	ND	U	g	0.05	ND	0.04	ND	U	g
Arochlor 1260	0.009	0.010		0.03	ND	0.02	ND	U	g	0.04	ND	0.02	ND	U	g
Arochlor 1221	0.011	0.010		0.04	ND	0.03	ND	U	g	0.05	ND	0.05	ND	U	g
Arochlor 1232	0.005	0.005		0.02	ND	0.00	ND	U	g	0.02	ND	0.00	ND	U	g

Base: Kotzebue LRRS

Site: SS11

Extraction Method: EPA Method 3550

Analytical Method: EPA Method 8081

Matrix: Soil

Units: mg/kg

Table 2.1.2
Analytical Data Summary
EPA Method 8081

				Environmental Samples											
			Field ID:		SS11-SB3-1.0DL		SS11-SB3-1.0DL				SS11-SB4-0.5		SS11-SB4-0.5		
			Batch ID:		H590		H590				H590		H590		
	DB-5	DB-608		DB-5	DB-5	DB-608	DB-608			DB-5	DB-5	DB-608	DB-608		
Parameters	MDL	MDL		PQL	Result	PQL	Result	Validity	Comments	PQL	Result	PQL	Result	Validity	Comments
					Dilution 50		Dilution 50								
alpha BHC	0.0001	0.0001		0.011	ND	0.0097	ND	UJ	b	0.00021	ND	0.00019	ND	U	g
beta BHC	0.0001	0.0001		0.017	ND	0.015	ND	UJ	b	0.00032	0.00063	0.00030	0.00081	J	n
delta BHC	0.0001	0.0001		0.017	ND	0.013	ND	UJ	b	0.00033	0.0012	0.00025	0.0017	J	n
gamma BHC (Lindane)	0.0001	0.0001		0.013	ND	0.011	ND	UJ	b	0.00026	ND	0.00022	ND	U	g
Heptachlor	0.0001	0.0001		0.015	ND	0.015	ND	UJ	b	0.0003	ND	0.0003	ND	U	g
Aldrin	0.0001	0.0001		0.011	ND	0.014	ND	UJ	b	0.00021	ND	0.00027	ND	U	g
Heptachlor Epoxide	0.0001	0.0001		0.013	ND	0.017	ND	UJ	b	0.00026	0.00018	0.00033	ND	U	h
Endosulfan I	0.0001	0.0001		0.020	ND	0.020	ND	UJ	b	0.00038	ND	0.00038	ND	U	g
Dieldrin	0.0001	0.0002		0.021	ND	0.026	ND	UJ	b	0.0004	ND	0.0005	ND	U	g
4,4'-DDE	0.0001	0.0002		0.017	0.15	0.026	0.14	J	b	0.0003	0.88 E**	0.0005	1.2 E**	J	n
Endrin	0.0001	0.0001		0.017	0.031	0.018	0.031	J	b,n	0.0003	0.035	0.0003	0.16	J	n
Endosulfan II	0.0002	0.0002		0.028	ND	0.027	ND	UJ	b	0.0005	ND	0.0005	ND	U	g
4,4'-DDD	0.0001	0.0001		0.021	0.46	0.025	0.60	J	b	0.0004	0.64 E**	0.0005	0.64 E**	J	n
Endosulfan Sulfate	0.0002	0.0002		0.043	ND	0.043	ND	UJ	b	0.0008	ND	0.0008	ND	U	g
4,4'-DDT	0.0002	0.0001		0.040	0.83	0.023	0.84	J	b	0.0008	1.0 E**	0.0004	1.5 E**	J	n
Methoxychlor	0.0008	0.0011		0.15	ND	0.19	ND	UJ	b	0.0029	3.5	0.0037	0.15	J	n
Endrin Aldehyde	0.0002	0.0003		0.039	ND	0.045	ND	UJ	b	0.0008	ND	0.0009	ND	U	g
gamma-Chlordane	0.0001	0.0001		0.0093	ND	0.014	ND	UJ	b	0.00018	ND	0.00027	ND	U	g
alpha-Chlordane	0.0001	0.0001		0.011	ND	0.020	ND	UJ	b	0.00021	0.0028	0.00038	ND	U	h
Toxaphene	0.007	0.009		1.3	ND	1.6	ND	UJ	b	0.03	ND	0.03	ND	U	g
Arochlor 1016	0.009	0.009		1.5	ND	1.5	ND	UJ	b	0.03	ND	0.03	ND	U	g
Arochlor 1242	0.005	0.006		0.93	ND	1.3	ND	UJ	b	0.02	ND	0.03	ND	U	g
Arochlor 1248	0.004	0.005		0.61	ND	0.82	ND	UJ	b	0.01	ND	0.02	ND	U	g
Arochlor 1254	0.011	0.009		1.8	ND	1.6	ND	UJ	b	0.18*	ND	0.18*	ND	U	g
Arochlor 1260	0.009	0.010		1.5	ND	0.79	ND	UJ	b	0.03	2.7	0.02	2.2		g
Arochlor 1221	0.011	0.010		1.8	ND	1.6	ND	UJ	b	0.04	ND	0.03	ND	U	g
Arochlor 1232	0.005	0.005		0.79	ND	0.08	ND	UJ	b	0.02	ND	0.02	ND	U	g

* In the opinion of the analyst, the relevant compound may not be present at or below the indicated concentration due to interfering background contamination that prevents a positive or negative spectral confirmation.

** Analyte detected above linear calibration range.

Base: Kotzebue LRRS							Table 2.1.2			
Site: SS11							Analytical Data Summary			
Extraction Method: EPA Method 3550							EPA Method 8081			
Analytical Method: EPA Method 8081										
Matrix: Soil										
Units: mg/kg										
				Environmental Samples						
			Field ID:		SS11-SB4-0.5DL		SS11-SB4-0.5DL			
			Batch ID:		H590		H590			
	DB-5	DB-608		DB-5	DB-5	DB-608	DB-608			
Parameters	MDL	MDL		PQL	Result	PQL	Result	Validity	Comments	
					Dilution 100		Dilution 100			
alpha BHC	0.0001	0.0001		0.021	ND	0.019	ND	U	g	
beta BHC	0.0001	0.0001		0.032	ND	0.030	ND	U	g	
delta BHC	0.0001	0.0001		0.033	ND	0.025	ND	U	g	
gamma BHC (Lindane)	0.0001	0.0001		0.026	ND	0.022	ND	U	g	
Heptachlor	0.0001	0.0001		0.030	ND	0.030	ND	U	g	
Aldrin	0.0001	0.0001		0.021	ND	0.027	ND	U	g	
Heptachlor Epoxide	0.0001	0.0001		0.026	ND	0.033	ND	U	g	
Endosulfan I	0.0001	0.0001		0.038	ND	0.038	ND	U	g	
Dieldrin	0.0001	0.0002		0.041	ND	0.051	ND	U	g	
4,4'-DDE	0.0001	0.0002		0.034	1.1	0.050	1.1		g	
Endrin	0.0001	0.0001		0.034	0.11	0.035	0.25	J	n	
Endosulfan II	0.0002	0.0002		0.055	ND	0.053	ND	U	g	
4,4'-DDD	0.0001	0.0001		0.041	0.54	0.049	0.54		g	
Endosulfan Sulfate	0.0002	0.0002		0.084	ND	0.084	ND	U	g	
4,4'-DDT	0.0002	0.0001		0.078	5.3	0.045	5.4		g	
Methoxychlor	0.0008	0.0011		0.29	ND	0.37	ND	U	g	
Endrin Aldehyde	0.0002	0.0003		0.076	ND	0.089	ND	U	g	
gamma-Chlordane	0.0001	0.0001		0.018	ND	0.027	ND	U	g	
alpha-Chlordane	0.0001	0.0001		0.021	ND	0.038	ND	U	g	
Toxaphene	0.007	0.009		2.5	ND	3.1	ND	U	g	
Arochlor 1016	0.009	0.009		3.0	ND	2.9	ND	U	g	
Arochlor 1242	0.005	0.008		1.8	ND	2.6	ND	U	g	
Arochlor 1248	0.004	0.005		1.2	ND	1.6	ND	U	g	
Arochlor 1254	0.011	0.009		3.6	ND	3.1	ND	U	g	
Arochlor 1260	0.009	0.010		2.9	3.0	1.5	3.2		g	
Arochlor 1221	0.011	0.010		3.6	ND	3.2	ND	U	g	
Arochlor 1232	0.005	0.005		1.5	ND	0.15	ND	U	g	

Base: Kotzebue LRRS						Table 2.1.2									
Site: SS11						Analytical Data Summary									
Extraction Method: EPA Method 3550						EPA Method 8081									
Analytical Method: EPA Method 8081															
Matrix: Soil															
Units: mg/kg															
				Environmental Samples											
			Field ID:		SS11-SD1		SS11-SD1				SS11-SD1DL		SS11-SD1DL		
			Batch ID:		H886		H886				H886		H886		
	DB-5	DB-608		DB-5	DB-5	DB-608	DB-608			DB-5	DB-5	DB-608	DB-608		
Parameters	MDL	MDL		PQL	Result	PQL	Result	Validity	Comments	PQL	Result Dilution 50	PQL	Result Dilution 50	Validity	Comments
alpha BHC	0.0001	0.0001		0.00031	0.0046	0.00028	0.0021	J	n	0.015	ND	0.014	ND	U	g
beta BHC	0.0001	0.0001		0.00047	0.0028	0.00044	ND	U	h	0.023	ND	0.022	ND	U	g
delta BHC	0.0001	0.0001		0.00048	ND	0.00036	ND	U	g	0.024	ND	0.018	ND	U	g
gamma BHC (Lindane)	0.0001	0.0001		0.00038	0.0030	0.00031	ND	U	h	0.019	ND	0.016	ND	U	g
Heptachlor	0.0001	0.0001		0.0004	ND	0.0004	ND	U	g	0.022	ND	0.021	ND	U	g
Aldrin	0.0001	0.0001		0.00030	ND	0.00039	ND	U	g	0.015	ND	0.019	ND	U	g
Heptachlor Epoxide	0.0001	0.0001		0.00038	0.0024	0.00048	ND	U	h	0.019	ND	0.024	ND	U	a
Endosulfan I	0.0001	0.0001		0.00055	0.0086	0.00055	ND	U	h	0.028	ND	0.028	ND	U	g
Dieldrin	0.0001	0.0002		0.0006	ND	0.0007	ND	U	g	0.030	ND	0.037	ND	U	g
4,4'-DDE	0.0001	0.0002		0.0005	0.20 E**	0.0007	0.21 E**	J	n	0.024	0.28	0.036	0.26		g
Endrin	0.0001	0.0001		0.0005	0.012	0.0005	0.021	J	n	0.024	0.036	0.025	0.043		a
Endosulfan II	0.0002	0.0002		0.0008	ND	0.0008	ND	U	a	0.040	ND	0.038	ND	U	a
4,4'-DDD	0.0001	0.0001		0.0006	1.4 E**	0.0007	1.9 E**	J	a,n	0.030	1.3	0.035	1.4		a
Endosulfan Sulfate	0.0002	0.0002		0.0012	ND	0.0012	ND	U	g	0.060	ND	0.060	ND	U	g
4,4'-DDT	0.0002	0.0001		0.0011	0.28 E**	0.0006	0.28 E**	J	n	0.056	0.23	0.032	0.25		g
Methoxychlor	0.0008	0.0011		0.0042	0.0062	0.0053	0.013	J	n	0.21	ND	0.26	ND	U	g
Endrin Aldehyde	0.0002	0.0003		0.0011	ND	0.0013	ND	U	g	0.055	0.018	0.064	ND	U	h
gamma-Chlordane	0.0001	0.0001		0.00026	0.0095	0.00039	0.0023	J	n	0.013	ND	0.019	ND	U	g
alpha-Chlordane	0.0001	0.0001		0.00031	ND	0.00055	ND	U	g	0.015	ND	0.028	ND	U	g
Toxaphene	0.007	0.009		0.04	ND	0.04	ND	U	g	1.8	ND	2.2	ND	U	g
Arochlor 1016	0.009	0.009		0.04	ND	0.04	ND	U	g	2.2	ND	2.1	ND	U	g
Arochlor 1242	0.005	0.008		0.03	ND	0.04	ND	U	g	1.3	ND	1.9	ND	U	g
Arochlor 1248	0.004	0.005		0.02	ND	0.02	ND	U	g	0.86	ND	1.2	ND	U	g
Arochlor 1254	0.011	0.009		0.05	ND	0.04	ND	U	g	2.6	ND	2.2	ND	U	g
Arochlor 1260	0.009	0.010		0.04	0.23	0.02	0.22		g	2.1	ND	1.1	ND	U	g
Arochlor 1221	0.011	0.010		0.05	ND	0.05	ND	U	g	2.6	ND	2.3	ND	U	g
Arochlor 1232	0.005	0.005		0.02	ND	0.00	ND	U	g	1.1	ND	0.11	ND	U	g

** Analyte detected above linear calibration range.

Base: Kotzebue LRRS
Site: SS11
Extraction Method: EPA Method 8260
Analytical Method: EPA Method 8260
Matrix: Soil
Units: mg/kg

Table 2.1.3
Analytical Data Summary
EPA Method 8260

			Environmental Samples											
		Field ID:		SS11-SB1-1.0				SS11-SB2-0.5				SS11-SB3-1.0		
		Batch ID:		H590				H590				H590		
Parameters	MDL		PQL	Result	Validity	Comments	PQL	Result	Validity	Comments	PQL	Result	Validity	Comments
Chloromethane	0.0009		0.010	ND	U	g	0.004	ND	U	g	0.003	ND	U	g
Bromomethane	0.0008		0.009	ND	U	g	0.004	ND	U	g	0.003	ND	U	g
Vinyl Chloride	0.0010		0.010	ND	U	g	0.004	ND	U	g	0.003	ND	U	g
Chloroethane	0.0010		0.011	ND	U	g	0.004	ND	U	g	0.003	ND	U	g
Methylene Chloride	0.0009		0.009	0.007	B J	a	0.004	0.004	B	a	0.003	0.005	B	a
Acetone	0.0039		0.04	ND	U	k	0.02	ND	U	k	0.01	ND	U	k
Carbon Disulfide	0.0005		0.006	ND	U	g	0.002	ND	U	g	0.002	ND	U	g
1,1-Dichloroethene	0.0012		0.013	ND	U	g	0.005	ND	U	g	0.004	ND	U	g
1,1-Dichloroethane	0.0004		0.004	ND	U	g	0.002	ND	U	g	0.001	ND	U	g
trans-1,2-Dichloroethene	0.0009		0.010	ND	U	g	0.004	ND	U	g	0.003	ND	U	g
cis-1,2-Dichloroethylene	0.0011		0.012	ND	U	g	0.005	ND	U	g	0.004	ND	U	g
Chloroform	0.0005		0.005	ND	U	g	0.002	ND	U	g	0.002	ND	U	g
1,2-Dichloroethane	0.0005		0.005	ND	U	g	0.002	ND	U	g	0.002	ND	U	g
Methyl Ethyl Ketone (2-butanone)	0.0025		0.027	ND	U	g	0.011	ND	U	g	0.008	ND	U	g
1,1,1-Trichloroethane	0.0004		0.005	ND	U	g	0.002	ND	U	g	0.001	ND	U	g
Carbon Tetrachloride	0.0010		0.011	ND	U	g	0.004	ND	U	g	0.003	ND	U	g
Vinyl Acetate	0.0016		0.018	ND	U	g	0.007	ND	U	g	0.005	ND	U	g
Bromodichloromethane	0.0006		0.007	ND	U	g	0.003	ND	U	g	0.002	ND	U	g
1,2-Dichloropropane	0.0008		0.009	ND	U	g	0.004	ND	U	g	0.003	ND	U	g
cis-1,3-Dichloropropene	0.0007		0.008	ND	U	g	0.003	ND	U	g	0.002	ND	U	g
Trichloroethylene (tce)	0.0005		0.006	0.002	J	g	0.002	ND	U	g	0.002	ND	U	g
Dibromochloromethane	0.0003		0.004	ND	U	g	0.001	ND	U	g	0.001	ND	U	g
1,1,2-Trichloroethane	0.0007		0.008	ND	U	g	0.003	ND	U	g	0.002	ND	U	g
Benzene	0.0005		0.0051	ND	U	g	0.0020	ND	U	g	0.0015	ND	U	g

Base: Kotzebue LRRS
Site: SS11
Extraction Method: EPA Method 8260
Analytical Method: EPA Method 8260
Matrix: Soil
Units: mg/kg

Table 2.1.3
Analytical Data Summary
EPA Method 8260

			Environmental Samples											
		Field ID:		SS11-SB1-1.0				SS11-SB2-0.5				SS11-SB3-1.0		
		Batch ID:		H590				H590				H590		
Parameters	MDL		PQL	Result	Validity	Comments	PQL	Result	Validity	Comments	PQL	Result	Validity	Comments
trans-1,3-Dichloropropene	0.0005		0.006	ND	U	g	0.002	ND	U	g	0.002	ND	U	g
2-Chloroethyl Vinyl Ether	0.0006		0.007	ND	U	g	0.003	ND	U	g	0.002	ND	U	g
Bromoform	0.0013		0.014	ND	U	g	0.005	ND	U	g	0.004	ND	U	g
Methyl Isobutyl Ketone	0.0015		0.016	ND	U	g	0.007	ND	U	g	0.005	ND	U	g
2-Hexanone	0.0027		0.030	ND	U	g	0.012	ND	U	g	0.009	ND	U	g
Tetrachloroethylene (pce)	0.0009		0.010	ND	U	g	0.004	ND	U	g	0.003	ND	U	g
1,1,2,2-Tetrachloroethane	0.0009		0.0099	ND	U	g	0.0040	ND	U	g	0.0030	ND	U	g
Toluene	0.0009		0.0099	ND	U	g	0.0040	ND	U	g	0.0030	ND	U	g
Chlorobenzene	0.0007		0.008	ND	U	g	0.003	ND	U	g	0.002	ND	U	g
Ethylbenzene	0.0004		0.0047	ND	U	g	0.0019	ND	U	g	0.0014	ND	U	g
Styrene	0.0006		0.007	ND	U	g	0.003	ND	U	g	0.002	ND	U	g
1,1,2-Trichloro-1,2,2-trifluoroethane	0.0007		0.008	ND	U	g	0.003	ND	U	g	0.002	ND	U	g
Xylenes, total	0.0020		0.022	ND	U	g	0.009	ND	U	g	0.007	ND	U	g
1,1,1,2-Tetrachloroethane	0.0010		0.011	ND	U	g	0.004	ND	U	g	0.003	ND	U	g
1,2,3-Trichloropropane	0.0003		0.025	ND	U	g	0.010	ND	U	g	0.007	ND	U	g
Bromochloromethane	0.0007		0.007	ND	U	g	0.003	ND	U	g	0.002	ND	U	g
1-Chlorohexane	0.0007		0.007	ND	U	g	0.003	ND	U	g	0.002	ND	U	g
Bromobenzene	0.0007		0.0080	ND	U	g	0.0032	ND	U	g	0.0024	ND	U	g

Base: Kotzebue LRRS
Site: SS11
Extraction Method: EPA Method 8260
Analytical Method: EPA Method 8260
Matrix: Soil
Units: mg/kg

Table 2.1.3
Analytical Data Summary
EPA Method 8260

			Environmental Samples			
		Field ID:		SS11-SB4-0.5		
		Batch ID:		H590		
Parameters	MDL		PQL	Result	Validity	Comments
Chloromethane	0.0009		0.003	ND	U	g
Bromomethane	0.0008		0.003	ND	U	g
Vinyl Chloride	0.0010		0.003	ND	U	g
Chloroethane	0.0010		0.003	ND	U	g
Methylene Chloride	0.0009		0.003	0.005	B	a
Acetone	0.0039		0.01	ND	U	k
Carbon Disulfide	0.0005		0.002	ND	U	g
1,1-Dichloroethene	0.0012		0.004	ND	U	g
1,1-Dichloroethane	0.0004		0.001	ND	U	g
trans-1,2-Dichloroethene	0.0009		0.003	ND	U	g
cis-1,2-Dichloroethylene	0.0011		0.004	ND	U	g
Chloroform	0.0005		0.002	ND	U	g
1,2-Dichloroethane	0.0005		0.002	ND	U	g
Methyl Ethyl Ketone (2-butanone)	0.0025		0.008	ND	U	g
1,1,1-Trichloroethane	0.0004		0.001	ND	U	g
Carbon Tetrachloride	0.0010		0.003	ND	U	g
Vinyl Acetate	0.0016		0.005	ND	U	g
Bromodichloromethane	0.0006		0.002	ND	U	g
1,2-Dichloropropane	0.0008		0.003	ND	U	g
cis-1,3-Dichloropropene	0.0007		0.002	ND	U	g
Trichloroethylene (tce)	0.0005		0.002	ND	U	g
Dibromochloromethane	0.0003		0.001	ND	U	g
1,1,2-Trichloroethane	0.0007		0.002	ND	U	g
Benzene	0.0005		0.0016	ND	U	g

Base: Kotzebue LRRS						Table 2.1.3							
Site: SS11						Analytical Data Summary							
Extraction Method: EPA Method 8260						EPA Method 8260							
Analytical Method: EPA Method 8260													
Matrix: Soil													
Units: mg/kg													
			Environmental Samples										
		Field ID:		SS11-SB4-0.5									
		Batch ID:		H590									
Parameters	MDL		PQL	Result	Validity	Comments							
trans-1,3-Dichloropropene	0.0005		0.002	ND	U	g							
2-Chloroethyl Vinyl Ether	0.0006		0.002	ND	U	g							
Bromoform	0.0013		0.004	ND	U	g							
Methyl Isobutyl Ketone	0.0015		0.005	ND	U	g							
2-Hexanone	0.0027		0.009	ND	U	g							
Tetrachloroethylene (pce)	0.0009		0.003	ND	U	g							
1,1,2,2-Tetrachloroethane	0.0009		0.0030	ND	U	g							
Toluene	0.0009		0.0030	ND	U	g							
Chlorobenzene	0.0007		0.002	ND	U	g							
Ethylbenzene	0.0004		0.0014	ND	U	g							
Styrene	0.0006		0.002	ND	U	g							
1,1,2-Trichloro-1,2,2-trifluoroethane	0.0007		0.002	ND	U	g							
Xylenes, total	0.0020		0.007	ND	U	g							
1,1,1,2-Tetrachloroethane	0.0010		0.003	ND	U	g							
1,2,3-Trichloropropane	0.0023		0.008	ND	U	g							
Bromochloromethane	0.0007		0.002	ND	U	g							
1-Chlorohexane	0.0007		0.002	ND	U	g							
Bromobenzene	0.0007		0.0024	ND	U	g							

Base: Kotzebue LRRS						Table 2.1.3							
Site: SS11						Analytical Data Summary							
Extraction Method: EPA Method 8260						EPA Method 8260							
Analytical Method: EPA Method 8260													
Matrix: Soil													
Units: mg/kg													
			Environmental Samples										
		Field ID:		SS11-SD1									
		Batch ID:		H886									
Parameters	MDL		PQL	Result	Validity	Comments							
Chloromethane	0.0009		0.004	ND	U	g							
Bromomethane	0.0008		0.004	ND	U	g							
Vinyl Chloride	0.0010		0.005	ND	U	g							
Chloroethane	0.0010		0.005	ND	U	g							
Methylene Chloride	0.0009		0.004	0.010	B	k							
Acetone	0.0039		0.02	0.03	B	k							
Carbon Disulfide	0.0005		0.003	ND	U	g							
1,1-Dichloroethene	0.0012		0.006	ND	U	g							
1,1-Dichloroethane	0.0004		0.002	ND	U	g							
trans-1,2-Dichloroethene	0.0009		0.004	ND	U	g							
cis-1,2-Dichloroethylene	0.0011		0.006	ND	U	g							
Chloroform	0.0005		0.002	ND	U	g							
1,2-Dichloroethane	0.0005		0.002	ND	U	g							
Methyl Ethyl Ketone (2-butanone)	0.0025		0.012	0.009	B	a,k							
1,1,1-Trichloroethane	0.0004		0.002	ND	U	g							
Carbon Tetrachloride	0.0010		0.005	ND	U	g							
Vinyl Acetate	0.0016		0.008	ND	U	g							
Bromodichloromethane	0.0006		0.003	ND	U	g							
1,2-Dichloropropane	0.0008		0.004	ND	U	g							
cis-1,3-Dichloropropene	0.0007		0.003	ND	U	g							
Trichloroethylene (tce)	0.0005		0.003	ND	U	g							
Dibromochloromethane	0.0003		0.002	ND	U	g							
1,1,2-Trichloroethane	0.0007		0.003	ND	U	g							
Benzene	0.0005		0.0023	ND	U	g							

Base: Kotzebue LRRS						Table 2.1.3							
Site: SS11						Analytical Data Summary							
Extraction Method: EPA Method 8260						EPA Method 8260							
Analytical Method: EPA Method 8260													
Matrix: Soil													
Units: mg/kg													
			Environmental Samples										
		Field ID:		SS11-SD1									
		Batch ID:		H886									
Parameters	MDL		PQL	Result	Validity	Comments							
trans-1,3-Dichloropropene	0.0005		0.003	ND	U	g							
2-Chloroethyl Vinyl Ether	0.0006		0.003	ND	U	g							
Bromoform	0.0013		0.006	ND	U	g							
Methyl Isobutyl Ketone	0.0015		0.007	ND	U	g							
2-Hexanone	0.0027		0.014	ND	U	g							
Tetrachloroethylene (pce)	0.0009		0.004	ND	U	g							
1,1,2,2-Tetrachloroethane	0.0009		0.0045	ND	U	g							
Toluene	0.0009		0.0045	0.099	J								
Chlorobenzene	0.0007		0.004	ND	U	g							
Ethylbenzene	0.0004		0.0021	0.0012	J	g							
Styrene	0.0006		0.003	ND	U	g							
1,1,2-Trichloro-1,2,2-trifluoroethane	0.0007		0.004	0.002	B J	a							
Xylenes, total	0.0020		0.010	0.014		g							
1,1,1,2-Tetrachloroethane	0.0010		0.005	ND	U	g							
1,2,3-Trichloropropane	0.0023		0.011	ND	U	g							
Bromochloromethane	0.0011		0.003	ND	U	g							
1-Chlorohexane	0.0007		0.003	ND	U	g							
Bromobenzene	0.0007		0.0036	ND	U	g							

Base: Kotzebue LRRS
Site: SS11
Extraction Method: EPA Method 3550
Analytical Method: EPA Method 8270
Matrix: Soil
Units: mg/kg

Table 5.2.1.4
Analytical Data Summary
EPA Method 8270

			Environmental Samples											
		Field ID:		SS11-SB1-1.0				SS11-SB2-0.5				SS11-SB3-1.0		
		Batch ID:		H590				H590				H590		
Parameters	MDL		PQL	Result	Validity	Comments	PQL	Result	Validity	Comments	PQL	Result	Validity	Comments
Phenol	0.05		0.2	ND	U	g	0.3	ND	U	g	0.2	ND	U	g
bis(2-Chloroethyl) Ether	0.04		0.1	ND	U	g	0.2	ND	U	g	0.1	ND	U	g
2-Chlorophenol	0.07		0.2	ND	U	g	0.3	ND	U	g	0.2	ND	U	g
1,3-Dichlorobenzene	0.04		0.1	ND	U	k	0.2	ND	U	k	0.1	ND	U	k
1,4-Dichlorobenzene	0.03		0.1	ND	U	g	0.1	ND	U	g	0.1	ND	U	g
Benzyl Alcohol	0.05		0.2	ND	U	g	0.2	ND	U	g	0.2	ND	U	g
1,2-Dichlorobenzene	0.04		0.1	ND	U	g	0.2	ND	U	g	0.1	ND	U	g
2-Methylphenol	0.010		0.3	ND	U	g	0.5	ND	U	g	0.3	ND	U	g
2,2'-Oxybis (1-Chloropropane)	0.03		0.1	ND	U	g	0.2	ND	U	g	0.1	ND	U	g
4-Methylphenol	0.08		0.3	ND	U	g	0.4	ND	U	g	0.3	ND	U	g
N-Nitrosodi-n-propylamine	0.03		0.1	ND	U	g	0.1	ND	U	g	0.1	ND	U	g
Hexachloroethane	0.04		0.1	ND	U	g	0.2	ND	U	g	0.1	ND	U	g
Nitrobenzene	0.02		0.1	ND	U	g	0.1	ND	U	g	0.1	ND	U	g
Isophorone	0.03		0.1	ND	U	g	0.2	ND	U	g	0.1	ND	U	g
2-Nitrophenol	0.03		0.1	ND	U	g	0.2	ND	U	g	0.1	ND	U	g
2,4-Dimethylphenol	0.17		0.3	ND	U	g	0.4	ND	U	g	0.3	ND	U	g
Benzoic Acid	0.06		0.20	ND	U	g	0.27	ND	U	g	0.19	ND	U	g
bis(2-Chloroethoxy) Methane	0.04		0.1	ND	U	g	0.2	ND	U	g	0.1	ND	U	g
2,4-Dichlorophenol	0.04		0.2	ND	U	g	0.2	ND	U	g	0.2	ND	U	g
1,2,4-Trichlorobenzene	0.03		0.1	ND	U	g	0.2	ND	U	g	0.1	ND	U	g
Naphthalene	0.04		0.1	ND	U	g	0.2	ND	U	g	0.1	ND	U	g
4-Chloroaniline	0.10		0.4	ND	U	g	0.5	ND	U	g	0.4	ND	U	g
Hexachlorobutadiene	0.03		0.1	ND	U	g	0.2	ND	U	g	0.1	ND	U	g
4-Chloro-3-Methylphenol	0.06		0.2	ND	U	g	0.3	ND	U	g	0.2	ND	U	g
2-Methylnaphthalene	0.03		0.1	ND	U	g	0.2	ND	U	g	0.1	ND	U	g
Hexachlorocyclopentadiene	0.03		0.1	ND	U	g	0.1	ND	U	g	0.1	ND	U	g
2,4,6-Trichlorophenol	0.04		0.1	ND	U	g	0.2	ND	U	g	0.1	ND	U	g
2,4,5-Trichlorophenol	0.03		0.09	ND	U	g	0.12	ND	U	g	0.09	ND	U	g
2-Chloronaphthalene	0.03		0.1	ND	U	g	0.2	ND	U	g	0.1	ND	U	g
2-Nitroaniline	0.02		0.07	ND	U	g	0.09	ND	U	g	0.07	ND	U	g
Dimethyl Phthalate	0.04		0.1	ND	U	g	0.2	ND	U	g	0.1	ND	U	g
Acenaphthylene	0.04		0.1	ND	U	g	0.2	ND	U	g	0.1	ND	U	g
3-Nitroaniline	0.11		0.38	ND	U	g	0.53	ND	U	g	0.38	ND	U	g
Acenaphthene	0.03		0.1	ND	U	g	0.1	ND	U	g	0.1	ND	U	g
2,4-Dinitrophenol	0.09		0.31	ND	U	g	0.42	ND	U	g	0.31	ND	U	g
4-Nitrophenol	0.07		0.23	ND	U	g	0.31	ND	U	g	0.23	ND	U	g
Dibenzofuran	0.03		0.1	ND	U	g	0.1	ND	U	g	0.1	ND	U	g
2,6-Dinitrotoluene	0.04		0.1	ND	U	g	0.2	ND	U	g	0.1	ND	U	g

Base: Kotzebue LRRS						Table 5.2.1.4								
Site: SS11						Analytical Data Summary								
Extraction Method: EPA Method 3550						EPA Method 8270								
Analytical Method: EPA Method 8270														
Matrix: Soil														
Units: mg/kg														
			Environmental Samples											
		Field ID:		SS11-SB1-1.0				SS11-SB2-0.5				SS11-SB3-1.0		
		Batch ID:		H590				H590				H590		
Parameters	MDL		PQL	Result	Validity	Comments	PQL	Result	Validity	Comments	PQL	Result	Validity	Comments
2,4-Dinitrotoluene	0.02		0.1	ND	U	g	0.1	ND	U	g	0.1	ND	U	g
Diethyl Phthalate	0.04		0.1	ND	U	g	0.2	ND	U	g	0.1	ND	U	g
4-Chlorophenyl Phenyl Ether	0.02		0.1	ND	U	g	0.1	ND	U	g	0.1	ND	U	g
Fluorene	0.03		0.1	ND	U	g	0.1	ND	U	g	0.1	ND	U	g
4-Nitroaniline	0.13		0.46	ND	U	g	0.63	ND	U	g	0.46	ND	U	g
4,6-Dinitro-2-Methylphenol	0.09		0.31	ND	U	g	0.42	ND	U	g	0.31	ND	U	g
N-Nitrosodiphenylamine	0.08		0.3	ND	U	g	0.4	ND	U	g	0.3	ND	U	g
4-Bromophenyl Phenyl Ether	0.02		0.1	ND	U	g	0.1	ND	U	g	0.1	ND	U	g
Hexachlorobenzene	0.03		0.1	ND	U	g	0.2	ND	U	g	0.1	ND	U	g
Pentachlorophenol	0.03		0.11	ND	U	g	0.16	ND	U	g	0.11	ND	U	g
Phenanthrene	0.03		0.1	ND	U	g	0.2	ND	U	g	0.1	ND	U	g
Anthracene	0.04		0.2	ND	U	g	0.2	ND	U	g	0.2	ND	U	g
di-n-butyl Phthalate	0.06		0.2	ND	U	g	0.3	ND	U	g	0.2	ND	U	g
Fluroanthene	0.03		0.1	ND	U	g	0.2	ND	U	g	0.1	ND	U	g
Pyrene	0.03		0.1	ND	U	g	0.1	ND	U	g	0.1	ND	U	g
Butylbenzylphthalate	0.02		0.1	ND	U	g	0.1	ND	U	g	0.1	ND	U	g
3,3'-Dichlorobenzidine	0.06		0.2	ND	U	g	0.3	ND	U	g	0.2	ND	U	g
Benzo(a)anthracene	0.04		0.1	ND	U	g	0.2	ND	U	g	0.1	ND	U	g
bis(2-Ethylhexyl) Phthalate	0.04		0.1	0.05	J		0.2	0.1	J		0.1	0.2		g
Chrysene	0.05		0.2	ND	U	g	0.2	ND	U	g	0.2	ND	U	g
di-n-Octylphthalate	0.02		0.1	ND	U	g	0.1	ND	U	g	0.1	ND	U	g
Benzo(b)fluoranthene	0.04		0.1	ND	U	g	0.2	ND	U	g	0.1	ND	U	g
Benzo(k)fluoranthene	0.07		0.3	ND	U	g	0.4	ND	U	g	0.3	ND	U	g
Benzo(a)pyrene	0.04		0.1	ND	U	g	0.2	ND	U	g	0.1	ND	U	g
Indeno(1,2,3-c,d)pyrene	0.03		0.1	ND	U	g	0.1	ND	U	g	0.1	ND	U	g
Dibenzo(a,h)anthracene	0.02		0.1	ND	U	g	0.1	ND	U	g	0.1	ND	U	g
Benzo(g,h,i)perylene	0.03		0.1	ND	U	g	0.2	ND	U	g	0.1	ND	U	g

Base: Kotzebue LRRS
Site: SS11
Extraction Method: EPA Method 3550
Analytical Method: EPA Method 8270
Matrix: Soil
Units: mg/kg

Table 5.2.1.4
Analytical Data Summary
EPA Method 8270

Environmental Samples

		Field ID:	SS11-SB4-0.5			
		Batch ID:	H590			
Parameters	MDL	PQL	Result	Validity	Comments	
Phenol	0.05	0.2	ND	U	g	
bis(2-Chloroethyl) Ether	0.04	0.1	ND	U	g	
2-Chlorophenol	0.07	0.2	ND	U	g	
1,3-Dichlorobenzene	0.04	0.1	ND	U	k	
1,4-Dichlorobenzene	0.03	0.1	ND	U	g	
Benzyl Alcohol	0.05	0.2	ND	U	g	
1,2-Dichlorobenzene	0.04	0.1	ND	U	g	
2-Methylphenol	0.10	0.3	ND	U	g	
2,2'-Oxybis (1-Chloropropane)	0.03	0.1	ND	U	g	
4-Methylphenol	0.08	0.3	ND	U	g	
N-Nitrosodi-n-propylamine	0.03	0.1	ND	U	g	
Hexachloroethane	0.04	0.1	ND	U	g	
Nitrobenzene	0.02	0.1	ND	U	g	
Isophorone	0.03	0.1	ND	U	g	
2-Nitrophenol	0.03	0.1	ND	U	g	
2,4-Dimethylphenol	0.17	0.3	ND	U	g	
Benzoic Acid	0.06	0.19	ND	U	g	
bis(2-Chloroethoxy) Methane	0.04	0.1	ND	U	g	
2,4-Dichlorophenol	0.04	0.2	ND	U	g	
1,2,4-Trichlorobenzene	0.03	0.1	ND	U	g	
Naphthalene	0.04	0.1	ND	U	g	
4-Chloroaniline	0.10	0.4	ND	U	g	
Hexachlorobutadiene	0.03	0.1	ND	U	g	
4-Chloro-3-Methylphenol	0.06	0.2	ND	U	g	
2-Methylnaphthalene	0.03	0.1	ND	U	g	
Hexachlorocyclopentadiene	0.03	0.1	ND	U	g	
2,4,6-Trichlorophenol	0.04	0.1	ND	U	g	
2,4,5-Trichlorophenol	0.03	0.09	ND	U	g	
2-Chloronaphthalene	0.03	0.1	ND	U	g	
2-Nitroaniline	0.02	0.07	ND	U	g	
Dimethyl Phthalate	0.04	0.1	ND	U	g	
Acenaphthylene	0.04	0.1	ND	U	g	
3-Nitroaniline	0.11	0.38	ND	U	g	
Acenaphthene	0.03	0.1	ND	U	g	
2,4-Dinitrophenol	0.09	0.31	ND	U	g	
4-Nitrophenol	0.07	0.23	ND	U	g	
Dibenzofuran	0.03	0.1	ND	U	g	
2,6-Dinitrotoluene	0.04	0.1	ND	U	g	

Base: Kotzebue LRRS						Table 5.2.1.4								
Site: SS11						Analytical Data Summary								
Extraction Method: EPA Method 3550						EPA Method 8270								
Analytical Method: EPA Method 8270														
Matrix: Soil														
Units: mg/kg														
			Environmental Samples											
		Field ID:		SS11-SB4-0.5										
		Batch ID:		H590										
Parameters	MDL		PQL	Result	Validity	Comments								
2,4-Dinitrotoluene	0.02		0.1	ND	U	g								
Diethyl Phthalate	0.04		0.1	ND	U	g								
4-Chlorophenyl Phenyl Ether	0.02		0.1	ND	U	g								
Fluorene	0.03		0.1	ND	U	g								
4-Nitroaniline	0.13		0.46	ND	U	g								
4,6-Dinitro-2-Methylphenol	0.09		0.31	ND	U	g								
N-Nitrosodiphenylamine	0.08		0.3	ND	U	g								
4-Bromophenyl Phenyl Ether	0.02		0.1	ND	U	g								
Hexachlorobenzene	0.03		0.1	ND	U	g								
Pentachlorophenol	0.03		0.11	ND	U	g								
Phenanthrene	0.03		0.1	ND	U	g								
Anthracene	0.04		0.2	ND	U	g								
di-n-butyl Phthalate	0.06		0.2	ND	U	g								
Fluroanthene	0.03		0.1	ND	U	g								
Pyrene	0.03		0.1	ND	U	g								
Butylbenzylphthalate	0.02		0.1	ND	U	g								
3,3'-Dichlorobenzidine	0.06		0.2	ND	U	g								
Benzo(a)anthracene	0.04		0.1	ND	U	g								
bis(2-Ethylhexyl) Phthalate	0.04		0.1	0.1	J									
Chrysene	0.05		0.2	ND	U	g								
di-n-Octylphthalate	0.02		0.1	ND	U	g								
Benzo(b)fluoranthene	0.04		0.1	ND	U	g								
Benzo(k)fluoranthene	0.07		0.3	ND	U	g								
Benzo(a)pyrene	0.04		0.1	ND	U	g								
Indeno(1,2,3-c,d)pyrene	0.03		0.1	ND	U	g								
Dibenzo(a,h)anthracene	0.02		0.1	ND	U	g								
Benzo(g,h,i)perylene	0.03		0.1	ND	U	g								

Base: Kotzebue LRRS						Table 5.2.1.4											
Site: SS11						Analytical Data Summary											
Extraction Method: EPA Method 3550						EPA Method 8270											
Analytical Method: EPA Method 8270																	
Matrix: Soil																	
Units: mg/kg																	
			Environmental Samples														
		Field ID:		SS11-SD1													
		Batch ID:		H886													
Parameters	MDL		PQL	Result	Validity	Comments											
Phenol	0.05		0.3	ND	U	g											
bis(2-Chloroethyl) Ether	0.04		0.2	ND	U	g											
2-Chlorophenol	0.07		0.3	ND	U	g											
1,3-Dichlorobenzene	0.04		0.2	ND	U	g											
1,4-Dichlorobenzene	0.03		0.1	ND	U	g											
Benzyl Alcohol	0.05		0.3	ND	U	g											
1,2-Dichlorobenzene	0.04		0.2	ND	U	g											
2-Methylphenol	0.10		0.5	ND	U	g											
2,2'-Oxybis (1-Chloropropane)	0.03		0.2	ND	U	g											
4-Methylphenol	0.08		0.4	0.3	J												
N-Nitrosodi-n-propylamine	0.03		0.1	ND	U	g											
Hexachloroethane	0.04		0.2	ND	U	g											
Nitrobenzene	0.02		0.1	ND	U	g											
Isophorone	0.03		0.5	ND	U	g											
2-Nitrophenol	0.03		0.2	ND	U	g											
2,4-Dimethylphenol	0.17		0.5	ND	U	g											
Benzoic Acid	0.06		0.27	ND	U	g											
bis(2-Chloroethoxy) Methane	0.04		0.2	ND	U	g											
2,4-Dichlorophenol	0.04		0.2	ND	U	g											
1,2,4-Trichlorobenzene	0.03		0.2	ND	U	g											
Naphthalene	0.04		0.2	ND	U	g											
4-Chloroaniline	0.10		0.5	ND	U	g											
Hexachlorobutadiene	0.03		0.2	ND	U	g											
4-Chloro-3-Methylphenol	0.06		0.3	ND	U	g											
2-Methylnaphthalene	0.03		0.2	ND	U	g											
Hexachlorocyclopentadiene	0.03		0.1	ND	U	g											
2,4,6-Trichlorophenol	0.04		0.2	ND	U	g											
2,4,5-Trichlorophenol	0.03		0.12	ND	U	g											
2-Chloronaphthalene	0.03		0.2	ND	U	g											
2-Nitroaniline	0.02		0.21	ND	U	g											
Dimethyl Phthalate	0.04		0.2	ND	U	g											
Acenaphthylene	0.04		0.2	ND	U	g											
3-Nitroaniline	0.11		0.54	ND	U	g											
Acenaphthene	0.03		0.1	ND	U	g											
2,4-Dinitrophenol	0.09		0.43	ND	U	g											
4-Nitrophenol	0.07		1.4	ND	U	g											
Dibenzofuran	0.03		0.2	ND	U	g											
2,6-Dinitrotoluene	0.04		0.8	ND	U	g											

Base: Kotzebue LRRS						Table 5.2.1.4								
Site: SS11						Analytical Data Summary								
Extraction Method: EPA Method 3550						EPA Method 8270								
Analytical Method: EPA Method 8270														
Matrix: Soil														
Units: mg/kg														
			Environmental Samples											
		Field ID:		SS11-SD1										
		Batch ID:		H886										
Parameters	MDL		PQL	Result	Validity	Comments								
2,4-Dinitrotoluene	0.02		0.1	ND	U	g								
Diethyl Phthalate	0.04		0.2	ND	U	g								
4-Chlorophenyl Phenyl Ether	0.02		0.1	ND	U	g								
Fluorene	0.03		0.1	ND	U	g								
4-Nitroaniline	0.13		0.65	ND	U	g								
4,6-Dinitro-2-Methylphenol	0.09		0.43	ND	U	g								
N-Nitrosodiphenylamine	0.08		0.4	ND	U	g								
4-Bromophenyl Phenyl Ether	0.02		0.1	ND	U	g								
Hexachlorobenzene	0.03		0.2	ND	U	g								
Pentachlorophenol	0.03		0.16	ND	U	g								
Phenanthrene	0.03		0.2	ND	U	g								
Anthracene	0.04		0.2	ND	U	g								
di-n-butyl Phthalate	0.06		0.3	ND	U	g								
Fluroanthene	0.03		0.2	ND	U	g								
Pyrene	0.03		0.1	ND	U	g								
Butylbenzylphthalate	0.02		0.1	ND	U	g								
3,3'-Dichlorobenzidine	0.06		0.3	ND	U	g								
Benzo(a)anthracene	0.04		0.2	ND	U	g								
bis(2-Ethylhexyl) Phthalate	0.04		0.2	0.4		g								
Chrysene	0.05		0.2	ND	U	g								
di-n-Octylphthalate	0.02		0.1	ND	U	g								
Benzo(b)fluoranthene	0.04		0.2	ND	U	g								
Benzo(k)fluoranthene	0.07		0.4	ND	U	g								
Benzo(a)pyrene	0.04		0.2	ND	U	g								
Indeno(1,2,3-c,d)pyrene	0.03		0.1	ND	U	g								
Dibenzo(a,h)anthracene	0.02		0.1	ND	U	g								
Benzo(g,h,i)perylene	0.03		0.2	ND	U	g								

Base: Kotzebue LRRS						Table 2.2.1								
Site: SS11						Analytical Data Summary								
Extraction Method: EPA Method 3550						Method AK102								
Analytical Method: Method AK102														
Matrix: Water														
Units: mg/L														
			Environmental Samples											
		Field ID:		SS11-SW1										
		Batch ID:		H882										
Parameters	MDL		PQL	Result	Validity	Comments								
Diesel Hydrocarbons	0.06		0.11	0.81		g								

Base: Kotzebue LRRS							Table 2.2.2							
Site: SS11							Analytical Data Summary							
Extraction Method: EPA Method 3550							EPA Method 8081							
Analytical Method: EPA Method 8081														
Matrix: Water														
Units: ug/L														
			Environmental Samples											
			Field ID:		SS11-SW1		SS11-SW1							
			Batch ID:		H882		H882							
	DB-5	DB-608		DB-5	DB-5	DB-608	DB-608							
Parameters	MDL	MDL		PQL	Result	PQL	Result	Validity	Comments					
alpha BHC	0.002	0.001		0.01	0.07	0.01	ND	U	h					
beta BHC	0.002	0.003		0.01	0.07	0.01	0.06		g					
delta BHC	0.002	0.002		0.01	0.06	0.01	0.11	J	n					
gamma BHC (Lindane)	0.002	0.002		0.01	ND	0.01	ND	U	g					
Heptachlor	0.004	0.004		0.01	0.01	0.01	ND	U	h,n					
Aldrin	0.005	0.010		0.02	'0.03	0.03	ND	U	h					
Heptachlor Epoxide	0.003	0.002		0.01	0.02	0.01	0.01	B J	a,n					
Endosulfan I	0.00017	0.004		0.01	ND	0.01	ND	U	g					
Dieldrin	0.004	0.005		0.02	ND	0.01	ND	U	g					
4,4'-DDE	0.009	0.010		0.029	0.072	0.032	ND	U	h					
Endrin	0.004	0.004		0.014	0.021	0.012	ND	U	h					
Endosulfan II	0.007	0.005		0.021	0.027	0.015	ND	U	h,k					
4,4'-DDD	0.005	0.004		0.017	0.052	0.014	0.037		g					
Endosulfan Sulfate	0.0004	0.003		0.01	ND	0.01	ND	U	g					
4,4'-DDT	0.010	0.008		0.031	ND	0.026	ND	U	g					
Methoxychlor	0.038	0.035		0.12	ND	0.11	ND	U	g					
Endrin Aldehyde	0.010	0.010		0.031	ND	0.031	ND	U	g					
gamma-Chlordane	0.003	0.003		0.01	0.01	0.01	ND	U	h					
alpha-Chlordane	0.003	0.004		0.01	ND	0.01	ND	U	g					
Toxaphene	0.25	0.15		0.79	ND	0.46	ND	U	g					
Arochlor 1016	0.3	0.3		0.9	ND	0.9	ND	U	g					
Arochlor 1242	0.2	0.3		0.7	ND	1.0	ND	U	g					
Arochlor 1248	0.3	0.2		0.8	ND	0.7	ND	U	g					
Arochlor 1254	0.2	0.3		1.0	ND	1.0	ND	U	g					
Arochlor 1260	0.3	0.3		1.0	ND	0.9	ND	U	g					
Arochlor 1221	0.2	0.2		0.8	ND	0.8	ND	U	g					
Arochlor 1232	0.3	0.3		0.8	ND	1.1	ND	U	g					

Base: Kotzebue LRRS						Table 2.2.3							
Site: SS11						Analytical Data Summary							
Extraction Method: EPA Method 8260						EPA Method 8260							
Analytical Method: EPA Method 8260													
Matrix: Water													
Units: ug/L													
			Environmental Samples										
		Field ID:		SS11-SW1									
		Batch ID:		H882									
Parameters	MDL		PQL	Result	Validity	Comments							
Chloromethane	1.03		3	ND	UJ	t							
Bromomethane	0.42		2	ND	UJ	t							
Vinyl Chloride	0.52		2	ND	UJ	t							
Chloroethane	0.59		2	ND	UJ	t							
Methylene Chloride	0.41		1	ND	UJ	t							
Acetone	2.90		9	5	J	t							
Carbon Disulfide	0.40		2	ND	UJ	t							
1,1-Dichloroethene	0.71		2	ND	UJ	t							
1,1-Dichloroethane	0.50		2	ND	UJ	t							
trans-1,2-Dichloroethene	0.42		1	ND	UJ	t							
cis-1,2-Dichloroethylene	0.43		2	ND	UJ	t							
Chloroform	0.26		1	ND	UJ	t							
1,2-Dichloroethane	0.69		2	ND	UJ	t							
Methyl Ethyl Ketone (2-butanone)	0.52		2	ND	UJ	t							
1,1,1-Trichloroethane	0.54		2	ND	UJ	t							
Carbon Tetrachloride	0.42		2	ND	UJ	t							
Vinyl Acetate	0.52		2	ND	UJ	t							
Bromodichloromethane	0.44		2	ND	UJ	t							
1,2-Dichloropropane	0.48		2	ND	UJ	t							
cis-1,3-Dichloropropene	0.38		1	ND	UJ	t							
Trichloroethylene (tce)	0.18		1	ND	UJ	t							
Dibromochloromethane	0.24		1	ND	UJ	t							
1,1,2-Trichloroethane	0.42		1	ND	UJ	t							
Benzene	0.42		2	ND	UJ	t							

Base: Kotzebue LRRS						Table 2.2.3								
Site: SS11						Analytical Data Summary								
Extraction Method: EPA Method 8260						EPA Method 8260								
Analytical Method: EPA Method 8260														
Matrix: Water														
Units: ug/L														
			Environmental Samples											
		Field ID:		SS11-SW1										
		Batch ID:		H882										
Parameters	MDL		PQL	Result	Validity	Comments								
trans-1,3-Dichloropropene	0.48		2	ND	UJ	t								
2-Chloroethyl Vinyl Ether	0.82		3	ND	UJ	t								
Bromoform	0.48		2	ND	UJ	t								
Methyl Isobutyl Ketone	1.22		4	ND	UJ	t								
2-Hexanone	0.72		2	ND	UJ	t								
Tetrachloroethylene (pce)	0.30		1	ND	UJ	t								
1,1,2,2-Tetrachloroethane	0.56		2	ND	UJ	t								
Toluene	0.46		2	ND	UJ	t								
Chlorobenzene	0.20		1	ND	UJ	t								
Ethylbenzene	0.28		1	ND	UJ	t								
Styrene	0.08		1	ND	UJ	t								
1,1,2-Trichloro-1,2,2-trifluoroethane	0.37		1	ND	UJ	t								
Xylenes, total	0.68		2	ND	UJ	t								
1,1,1,2-Tetrachloroethane	0.46		2	ND	UJ	t								
1,2,3-Trichloropropane	0.41		1	ND	UJ	t								
Bromochloromethane	0.24		1	ND	UJ	t								
1-Chlorohexane	1.68		5	ND	UJ	t								
Bromobenzene	0.43		2	ND	UJ	t								

Base: Kotzebue LRRS						Table 2.2.4								
Site: SS11						Analytical Data Summary								
Extraction Method: EPA Method 3550						EPA Method 8270								
Analytical Method: EPA Method 8270														
Matrix: Water														
Units: ug/L														
			Environmental Samples											
		Field ID:		SS11-SW1										
		Batch ID:		H882										
Parameters	MDL		PQL	Result	Validity	Comments								
Phenol	0.9		3	ND	U	g								
bis(2-Chloroethyl) Ether	1.9		6	ND	U	g								
2-Chlorophenol	0.2		1	ND	U	g								
1,3-Dichlorobenzene	0.3		1	1	B	k								
1,4-Dichlorobenzene	0.3		1	ND	U	g								
Benzyl Alcohol	0.7		2	ND	U	g								
1,2-Dichlorobenzene	0.2		1	ND	U	g								
2-Methylphenol	0.2		1	ND	U	g								
2,2'-Oxybis (1-Chloropropane)	0.2		1	ND	U	g								
4-Methylphenol	0.6		2	ND	U	g								
N-Nitrosodi-n-propylamine	1.3		4	ND	U	g								
Hexachloroethane	0.6		2	ND	U	g								
Nitrobenzene	0.3		1	ND	U	g								
Isophorone	0.5		2	ND	U	g								
2-Nitrophenol	0.5		2	ND	U	g								
2,4-Dimethylphenol	2.6		8	ND	U	g								
Benzoic Acid	3.0		10	ND	U	g								
bis(2-Chloroethoxy) Methane	0.5		2	ND	U	g								
2,4-Dichlorophenol	1.0		3	ND	U	g								
1,2,4-Trichlorobenzene	0.2		1	ND	U	g								
Naphthalene	0.2		1	ND	U	g								
4-Chloroaniline	2.0		6	ND	U	g								
Hexachlorobutadiene	0.7		2	ND	U	g								
4-Chloro-3-Methylphenol	1.1		3	ND	U	g								
2-Methylnaphthalene	0.6		2	ND	U	g								
Hexachlorocyclopentadiene	2.9		9	ND	U	g								
2,4,6-Trichlorophenol	1.5		5	ND	U	g								
2,4,5-Trichlorophenol	1.3		4	ND	U	g								
2-Chloronaphthalene	0.5		2	ND	U	g								
2-Nitroaniline	1.3		4	ND	U	g								
Dimethyl Phthalate	0.7		2	ND	U	g								
Acenaphthylene	0.6		2	ND	U	g								
3-Nitroaniline	5.4		17	ND	U	g								
Acenaphthene	0.6		2	ND	U	g								
2,4-Dinitrophenol	8.4		27	ND	U	g								
4-Nitrophenol	1.6		5	ND	U	g								
Dibenzofuran	0.6		2	ND	U	g								
2,6-Dinitrotoluene	1.5		5	ND	U	g								

Base: Kotzebue LRRS
Site: SS11
Extraction Method: EPA Method 3550
Analytical Method: EPA Method 8270
Matrix: Water
Units: ug/L

Table 2.2.4
Analytical Data Summary
EPA Method 8270

		Environmental Samples				
	Field ID:		SS11-SW1			
	Batch ID:		H882			
Parameters	MDL	PQL	Result	Validity	Comments	
2,4-Dinitrotoluene	1.3	4	ND	U	g	
Diethyl Phthalate	1.0	3	ND	U	g	
4-Chlorophenyl Phenyl Ether	0.5	2	ND	U	g	
Fluorene	0.5	2	ND	U	g	
4-Nitroaniline	4.5	14	ND	U	g	
4,6-Dinitro-2-Methylphenol	2.7	9	ND	U	g	
N-Nitrosodiphenylamine	0.6	2	ND	U	g	
4-Bromophenyl Phenyl Ether	0.6	2	ND	U	g	
Hexachlorobenzene	0.6	2	ND	U	g	
Pentachlorophenol	3.7	12	ND	U	g	
Phenanthrene	0.6	2	ND	U	g	
Anthracene	0.7	2	ND	U	g	
di-n-butyl Phthalate	1.0	3	ND	U	g	
Fluroanthene	0.6	2	ND	U	g	
Pyrene	0.6	2	ND	U	g	
Butylbenzylphthalate	0.7	2	ND	U	g	
3,3'-Dichlorobenzidine	2.1	7	ND	U	g	
Benzo(a)anthracene	0.6	2	ND	U	g	
bis(2-Ethylhexyl) Phthalate	0.6	2	ND	U	g	
Chrysene	0.6	2	ND	U	g	
di-n-Octylphthalate	0.6	2	ND	U	g	
Benzo(b)fluoranthene	0.6	2	ND	U	g	
Benzo(k)fluoranthene	0.8	3	ND	U	g	
Benzo(a)pyrene	0.7	2	ND	U	g	
Indeno(1,2,3-c,d)pyrene	0.5	2	ND	U	g	
Dibenzo(a,h)anthracene	0.6	2	ND	U	g	
Benzo(g,h,i)perylene	0.5	2	ND	U	g	

ANALYTICAL DATA SUMMARY
SITE SS12-SPILLS NO. 2 AND 3

Base: Kotzebue LRRS						Table 2.1.1								
Site: SS12						Analytical Data Summary								
Extraction Method: EPA Method 3550						Method AK102								
Analytical Method: Method AK102														
Matrix: Soil														
Units: mg/kg														
			Environmental Samples											
		Field ID:		SS12-SB1-1.5				SS12-SB1-1.5DL				SS12-SB10-2.0		
		Batch ID:		H607				H607				H607		
Parameters	MDL		PQL	Result	Validity	Comments	PQL	Result	Validity	Comments	PQL	Result	Validity	Comments
								Dilution 100						
Diesel Hydrocarbons	0.9		3.1	S*	NA	NA	310	11000		g	3.1	2400 E**	J	n
* No value reported due to saturation of the detector.														
** Analyte detected above linear calibration range.														

Base: Kotzebue LRRS						Table 2.1.1								
Site: SS12						Analytical Data Summary								
Extraction Method: EPA Method 3550						Method AK102								
Analytical Method: Method AK102														
Matrix: Soil														
Units: mg/kg														
			Environmental Samples											
		Field ID:		SS12-SB10-2.0DL				SS12-SB11-3.0ms				SS12-SB12-2.0		
		Batch ID:		H607				H607				H607		
Parameters	MDL		PQL	Result	Validity	Comments	PQL	Result	Validity	Comments	PQL	Result	Validity	Comments
				Dilution 50										
Diesel Hydrocarbons	0.9		150	1600		g	3.0	8.7		g	3.0	4500 E**	J	n
** Analyte detected above linear calibration range.														

Base: Kotzebue LRRS						Table 2.1.1							
Site: SS12						Analytical Data Summary							
Extraction Method: EPA Method 3550						Method AK102							
Analytical Method: Method AK102													
Matrix: Soil													
Units: mg/kg													
			Environmental Samples										
		Field ID:		SS12-SB11-30ms DUP				SS12-SB12-2.0DL				SS12-SB13-2.0	
		Batch ID:		H607				H607				H607	
Parameters	MDL		PQL	Result	Validity	Comments	PQL	Result	Validity	Comments	PQL	Result	Validity	Comments
								Dilution 50					
Diesel Hydrocarbons	0.9		3.0	7.7		g	150	5000		g	3.1	410		g
* No value reported due to saturation of the detector.													

Base: Kotzebue LRRS						Table 2.1.1								
Site: SS12						Analytical Data Summary								
Extraction Method: EPA Method 3550						Method AK102								
Analytical Method: Method AK102														
Matrix: Soil														
Units: mg/kg														
			Environmental Samples											
		Field ID:		SS12-SB14-1.5				SS12-SB14-1.5DL				SS12-SB15-1.5		
		Batch ID:		H607				H607				H607		
Parameters	MDL		PQL	Result	Validity	Comments	PQL	Result	Validity	Comments	PQL	Result	Validity	Comments
								Dilution 100						
Diesel Hydrocarbons	0.9		3.5	S*	NA	NA	350	37000		g	3.8	S*	NA	NA
* No value reported due to saturation of the detector.														

Base: Kotzebue LRRS						Table 2.1.1								
Site: SS12						Analytical Data Summary								
Extraction Method: EPA Method 3550						Method AK102								
Analytical Method: Method AK102														
Matrix: Soil														
Units: mg/kg														
			Environmental Samples											
		Field ID:		SS12-SB15-1.5DL				SS12-SB2-2.5				SS12-SB2-2.5DL		
		Batch ID:		H607				H607				H607		
Parameters	MDL		PQL	Result	Validity	Comments	PQL	Result	Validity	Comments	PQL	Result	Validity	Comments
				Dilution 100								Dilution 10		
Diesel Hydrocarbons	0.9		380	42000		g	3.0	630 E**	J	n	30	520		g
** Analyte detected above linear calibration range.														

Base: Kotzebue LRRS						Table 2.1.1								
Site: SS12						Analytical Data Summary								
Extraction Method: EPA Method 3550						Method AK102								
Analytical Method: Method AK102														
Matrix: Soil														
Units: mg/kg														
			Environmental Samples											
		Field ID:		SS12-SB3-1.5				SS12-SB3-1.5DL				SS12-SB4-2.0		
		Batch ID:		H607				H607				H607		
Parameters	MDL		PQL	Result	Validity	Comments	PQL	Result	Validity	Comments	PQL	Result	Validity	Comments
								Dilution 20						
Diesel Hydrocarbons	0.9		3.4	3400 E**	J	n	68	3100		g	3.1	S*	NA	NA
* No value reported due to saturation of the detector.														
** Analyte detected above linear calibration range.														

Base: Kotzebue LRRS						Table 2.1.1								
Site: SS12						Analytical Data Summary								
Extraction Method: EPA Method 3550						Method AK102								
Analytical Method: Method AK102														
Matrix: Soil														
Units: mg/kg														
			Environmental Samples											
		Field ID:		SS12-SB4-2.0DL				SS12-SB5-1.0				SS12-SB5-1.0DL		
		Batch ID:		H607				H607				H607		
Parameters	MDL		PQL	Result	Validity	Comments	PQL	Result	Validity	Comments	PQL	Result	Validity	Comments
				Dilution 100								Dilution 100		
Diesel Hydrocarbons	0.9		310	8500		g	3.0	S*	NA	NA	300	11000		g
* No value reported due to saturation of the detector.														

Base: Kotzebue LRRS						Table 2.1.1								
Site: SS12						Analytical Data Summary								
Extraction Method: EPA Method 3550						Method AK102								
Analytical Method: Method AK102														
Matrix: Soil														
Units: mg/kg														
			Environmental Samples											
		Field ID:		SS12-SB6-1.0				SS12SB5-1.0 DUP				SS12-SB7-1.5		
		Batch ID:		H607				H607				H607		
Parameters	MDL		PQL	Result	Validity	Comments	PQL	Result	Validity	Comments	PQL	Result	Validity	Comments
Diesel Hydrocarbons	0.9		2.9	200		g	300	11000		g	3.1	S*	NA	NA
* No value reported due to saturation of the detector.														

Base: Kotzebue LRRS						Table 2.1.1								
Site: SS12						Analytical Data Summary								
Extraction Method: EPA Method 3550						Method AK102								
Analytical Method: Method AK102														
Matrix: Soil														
Units: mg/kg														
			Environmental Samples											
		Field ID:		SS12-SB7-1.5DL				SS12-SB8-2.5				SS12-SB8-2.5DL		
		Batch ID:		H607				H607				H607		
Parameters	MDL		PQL	Result	Validity	Comments	PQL	Result	Validity	Comments	PQL	Result	Validity	Comments
				Dilution 100								Dilution 100		
Diesel Hydrocarbons	0.9		310	14000		g	3.2	720 E**	J	n	320	15000		g
** Analyte detected above linear calibration range.														

Base: Kotzebue LRRS						Table 2.1.1							
Site: SS12						Analytical Data Summary							
Extraction Method: EPA Method 3550						Method AK102							
Analytical Method: Method AK102													
Matrix: Soil													
Units: mg/kg													
			Environmental Samples										
		Field ID:		SS12-SB9-2.0				SS12-SB9-2.0DL					
		Batch ID:		H607				H607					
Parameters	MDL		PQL	Result	Validity	Comments	PQL	Result	Validity	Comments			
								Dilution 20					
Diesel Hydrocarbons	0.9		3.2	3300 E**	J	n	63	2600		g			
** Analyte detected above linear calibration range.													

Base: Kotzebue LRRS						Table 2.1.1							
Site: SS12						Analytical Data Summary							
Extraction Method: EPA Method 3550						Method AK102							
Analytical Method: Method AK102													
Matrix: Soil													
Units: mg/kg													
			Environmental Samples										
		Field ID:		SS12-SB16-1.5				SS12-SB16-1.5DL				SS12-SB17-3.5	
		Batch ID:		H615				H615				H615	
Parameters	MDL		PQL	Result	Validity	Comments	PQL	Result	Validity	Comments	PQL	Result	Validity	Comments
								Dilution 100					
Diesel Hydrocarbons	0.9		4.2	S*	NA	NA	420	7100		k	3.7	S*	NA	NA
* No value reported due to saturation of the detector.													

Base: Kotzebue LRRS						Table 2.1.1								
Site: SS12						Analytical Data Summary								
Extraction Method: EPA Method 3550						Method AK102								
Analytical Method: Method AK102														
Matrix: Soil														
Units: mg/kg														
			Environmental Samples											
		Field ID:		SS12-SB17-3.5DL				SS12-SB18-1.5				SS12-SB18-1.5DL		
		Batch ID:		H615				H615				H615		
Parameters	MDL		PQL	Result	Validity	Comments	PQL	Result	Validity	Comments	PQL	Result	Validity	Comments
				Dilution 100								Dilution 10		
Diesel Hydrocarbons	0.9		370	6500		k	3.3	1000 E**	J	k,n	33	870		k
** Analyte detected above linear calibration range.														

Base: Kotzebue LRRS						Table 2.1.1							
Site: SS12						Analytical Data Summary							
Extraction Method: EPA Method 3550						Method AK102							
Analytical Method: Method AK102													
Matrix: Soil													
Units: mg/kg													
			Environmental Samples										
		Field ID:		SS12-SB19-1.0				SS12-SB19-1.0DL				SS12-SB20-1.0	
		Batch ID:		H615				H615				H615	
Parameters	MDL		PQL	Result	Validity	Comments	PQL	Result	Validity	Comments	PQL	Result	Validity	Comments
								Dilution 100					
Diesel Hydrocarbons	0.9		14	S*	NA	NA	1400	53000		k	11	S*	NA	NA
* No value reported due to saturation of the detector.														

Base: Kotzebue LRRS						Table 2.1.1								
Site: SS12						Analytical Data Summary								
Extraction Method: EPA Method 3550						Method AK102								
Analytical Method: Method AK102														
Matrix: Soil														
Units: mg/kg														
			Environmental Samples											
		Field ID:		SS12-SB20-1.0DL				SS12-SB20-1.0 DUP				SS12-SB21-1.0		
		Batch ID:		H615				H615				H615		
Parameters	MDL		PQL	Result	Validity	Comments	PQL	Result	Validity	Comments	PQL	Result	Validity	Comments
				Dilution 100										
Diesel Hydrocarbons	0.9		1100	30000		k	1100	18000		g	16	8800 E**	J	k, n
** Analyte detected above linear calibration range.														

Base: Kotzebue LRRS						Table 2.1.1								
Site: SS12						Analytical Data Summary								
Extraction Method: EPA Method 3550						Method AK102								
Analytical Method: Method AK102														
Matrix: Soil														
Units: mg/kg														
			Environmental Samples											
		Field ID:		SS12-SB21-1.0DL				SS12-SB22-0.5				SS12-SB23-0.5		
		Batch ID:		H615				H615				H615		
Parameters	MDL		PQL	Result	Validity	Comments	PQL	Result	Validity	Comments	PQL	Result	Validity	Comments
				Dilution 10										
Diesel Hydrocarbons	0.9		160	9200		k	21	780		k	6.1	290		k

Base: Kotzebue LRRS						Table 2.1.1							
Site: SS12						Analytical Data Summary							
Extraction Method: EPA Method 3550						Method AK102							
Analytical Method: Method AK102													
Matrix: Soil													
Units: mg/kg													
			Environmental Samples										
		Field ID:		SS12-SB24-1.0				SS12-SB24-1.0DL					
		Batch ID:		H615				H615					
Parameters	MDL		PQL	Result	Validity	Comments	PQL	Result	Validity	Comments			
								Dilution 10					
Diesel Hydrocarbons	0.9		5.1	2100 E**	J	k,n	51	1900		k			
** Analyte detected above linear calibration range.													

Base: Kotzebue LRRS						Table 2.1.1								
Site: SS12						Analytical Data Summary								
Extraction Method: EPA Method 3550						Method AK102								
Analytical Method: Method AK102														
Matrix: Soil														
Units: mg/kg														
			Environmental Samples											
		Field ID:		SS12-SB25-4.0				SS12-SB25-4.0DL				SS12-SB26-5.0		
		Batch ID:		H632				H632				H632		
Parameters	MDL		PQL	Result	Validity	Comments	PQL	Result	Validity	Comments	PQL	Result	Validity	Comments
								Dilution 50						
Diesel Hydrocarbons	0.9		3.1	S*	NA	NA	160	4400		a	3.7	S*	NA	NA
* No value reported due to saturation of the detector.														

Base: Kotzebue LRRS						Table 2.1.1							
Site: SS12						Analytical Data Summary							
Extraction Method: EPA Method 3550						Method AK102							
Analytical Method: Method AK102													
Matrix: Soil													
Units: mg/kg													
			Environmental Samples										
		Field ID:		SS12-SB26-5.0DL									
		Batch ID:		H632									
Parameters	MDL		PQL	Result	Validity	Comments							
				Dilution 100									
Diesel Hydrocarbons	0.9		370	22000		a							

Base: Kotzebue LRRS						Table 2.1.1								
Site: SS12						Analytical Data Summary								
Extraction Method: EPA Method 3550						Method AK102								
Analytical Method: Method AK102														
Matrix: Soil														
Units: mg/kg														
			Environmental Samples											
		Field ID:		SS12-SD4				SS12-SD4 DUP						
		Batch ID:		H746				H746						
Parameters	MDL		PQL	Result	Validity	Comments	PQL	Result	Validity	Comments				
Diesel Hydrocarbons	0.9		12	160		g	12	170		g				

Base: Kotzebue LRRS						Table 2.1.1							
Site: SS12						Analytical Data Summary							
Extraction Method: EPA Method 3550						Method AK102							
Analytical Method: Method AK102													
Matrix: Soil													
Units: mg/kg													
			Environmental Samples										
		Field ID:		SS12-SB27-7.8				SS12-SB27-7.8DL					
		Batch ID:		H753				H753					
Parameters	MDL		PQL	Result	Validity	Comments	PQL	Result	Validity	Comments			
								Dilution 100					
Diesel Hydrocarbons	0.9		8.0	S*	NA	NA	800	18000		g			
* No value reported due to saturation of the detector.													

Base: Kotzebue LRRS				Table 2.1.1										
Site: SS12				Analytical Data Summary										
Extraction Method: EPA Method 3550				Method AK102										
Analytical Method: Method AK102														
Matrix: Soil														
Units: mg/kg														
			Environmental Samples											
		Field ID:		SS12-SB28-3.5				SS12-SB29-3.5				SS12-SB29-3.5DL		
		Batch ID:		H834				H834				H834		
Parameters	MDL		PQL	Result	Validity	Comments	PQL	Result	Validity	Comments	PQL	Result	Validity	Comments
												Dilution 50		
Diesel Hydrocarbons	0.9		7.3	1100		g	13	S*	NA	NA	670	13000		g
* No value reported due to saturation of the detector.														

Base: Kotzebue LRRS						Table 2.1.1								
Site: SS12						Analytical Data Summary								
Extraction Method: EPA Method 3550						Method AK102								
Analytical Method: Method AK102														
Matrix: Soil														
Units: mg/kg														
			Environmental Samples											
		Field ID:		SS12-SB30-2.0				SS12-SB31-2.0				SS12-SB32-1.1		
		Batch ID:		H859				H859				H859		
Parameters	MDL		PQL	Result	Validity	Comments	PQL	Result	Validity	Comments	PQL	Result	Validity	Comments
Diesel Hydrocarbons	0.9		9.9	500		g	17	1200		g	11	700		g

Base: Kotzebue LRRS				Table 2.1.1										
Site: SS12				Analytical Data Summary										
Extraction Method: EPA Method 3550				Method AK102										
Analytical Method: Method AK102														
Matrix: Soil														
Units: mg/kg														
			Environmental Samples											
		Field ID:		SS12-SB33-1.0				SS12-SB34-1.0				SS12-SB35-1.2		
		Batch ID:		H859				H859				H859		
Parameters	MDL		PQL	Result	Validity	Comments	PQL	Result	Validity	Comments	PQL	Result	Validity	Comments
Diesel Hydrocarbons	0.9		12	730		g	13	1900		g	12	690		g

Base: Kotzebue LRRS						Table 2.1.1								
Site: SS12						Analytical Data Summary								
Extraction Method: EPA Method 3550						Method AK102								
Analytical Method: Method AK102														
Matrix: Soil														
Units: mg/kg														
			Environmental Samples											
		Field ID:		SS12-SB36-0.8				SS12-SB36-0.8DL				SS12-SB37-2.0		
		Batch ID:		H859				H859				H859		
Parameters	MDL		PQL	Result	Validity	Comments	PQL	Result	Validity	Comments	PQL	Result	Validity	Comments
								Dilution 50						
Diesel Hydrocarbons	0.9		17	S*	NA	NA	870	22000		g	30	2100		g
* No value reported due to saturation of the detector.														

Base: Kotzebue LRRS						Table 2.1.1								
Site: SS12						Analytical Data Summary								
Extraction Method: EPA Method 3550						Method AK102								
Analytical Method: Method AK102														
Matrix: Soil														
Units: mg/kg														
			Environmental Samples											
		Field ID:		SS12-SB37-2.0 DUP				SS12-SB38-1.0				SS12-SB39-1.5		
		Batch ID:		H859				H859				H859		
Parameters	MDL		PQL	Result	Validity	Comments	PQL	Result	Validity	Comments	PQL	Result	Validity	Comments
Diesel Hydrocarbons	0.9		31	2500		g	9.5	180		g	13	640		g

Base: Kotzebue LRRS						Table 2.1.1								
Site: SS12						Analytical Data Summary								
Extraction Method: EPA Method 3550						Method AK102								
Analytical Method: Method AK102														
Matrix: Soil														
Units: mg/kg														
			Environmental Samples											
		Field ID:		SS12-SB40-2.5				SS12-SD5-01				SS12-SD5-01DL		
		Batch ID:		H859				H859				H859		
Parameters	MDL		PQL	Result	Validity	Comments	PQL	Result	Validity	Comments	PQL	Result	Validity	Comments
												Dilution 10		
Diesel Hydrocarbons	0.9		14	1000		g	15	7000 E**	J	n	150	6900		g
** Analyte detected above linear calibration range.														

Base: Kotzebue LRRS						Table 2.1.1							
Site: SS12						Analytical Data Summary							
Extraction Method: EPA Method 3550						Method AK102							
Analytical Method: Method AK102													
Matrix: Soil													
Units: mg/kg													
			Environmental Samples										
		Field ID:		SS12-SD5-01 DUP									
		Batch ID:		H859									
Parameters	MDL		PQL	Result	Validity	Comments							
Diesel Hydrocarbons	0.9		150	6300		g							

Base: Kotzebue LRRS						Table 2.1.2									
Site: SS12						Analytical Data Summary									
Extraction Method: EPA Method 3550						EPA Method 8081									
Analytical Method: EPA Method 8081															
Matrix: Soil															
Units: mg/kg															
				Environmental Samples											
			Field ID:		SS12-SB1-1.5DL		SS12-SB1-1.5DL					SS12-SB10-2.0		SS12-SB10-2.0		
			Batch ID:		H607		H607					H607		H607		
	DB-5	DB-608		DB-5	DB-5	DB-608	DB-608			DB-5		DB-5	DB-608	DB-608		
Parameters	MDL	MDL		PQL	Result	PQL	Result	Validity	Comments	PQL		Result	PQL	Result	Validity	Comments
					Dilution 20		Dilution 20					Dilution 50		Dilution 50		
alpha BHC	0.0001	0.0001		0.0044	ND	0.0039	ND	U	g	0.011		ND	0.0095	ND	UJ	b
beta BHC	0.0001	0.0001		0.0087	ND	0.0062	ND	U	g	0.016		ND	0.015	ND	UJ	b
delta BHC	0.0001	0.0001		0.0069	ND	0.0051	ND	U	g	0.017		ND	0.012	ND	UJ	b
gamma BHC (Lindane)	0.0001	0.0001		0.0054	ND	0.0045	ND	U	g	0.013		ND	0.011	ND	UJ	b
Heptachlor	0.0001	0.0001		0.0062	ND	0.0061	ND	U	g	0.015		ND	0.015	ND	UJ	b
Aldrin	0.0001	0.0001		0.0043	ND	0.0056	ND	U	g	0.010		ND	0.013	ND	UJ	b
Heptachlor Epoxide	0.0001	0.0001		0.0054	ND	0.0089	ND	U	g	0.013		0.025	0.017	ND	U	b,h
Endosulfan I	0.0001	0.0001		0.0079	ND	0.0079	ND	U	g	0.019		ND	0.019	ND	UJ	b
Dieldrin	0.0001	0.0002		0.0085	ND	0.010	ND	U	g	0.020		ND	0.025	ND	UJ	b
4,4'-DDE	0.0001	0.0002		0.0070	0.043	0.010	0.036	J	b	0.017		0.12	0.025	0.10	J	b
Endrin	0.0001	0.0001		0.0089	0.013	0.0072	ND	U	b,h	0.017		0.053	0.017	0.083	J	b,n
Endosulfan II	0.0002	0.0002		0.011	ND	0.011	ND	U	g	0.027		ND	0.027	ND	UJ	b
4,4'-DDD	0.0001	0.0001		0.0085	0.16	0.010	0.17	J	b	0.020		0.51	0.024	0.49	J	b
Endosulfan Sulfate	0.0002	0.0002		0.017	ND	0.017	ND	U	g	0.042		ND	0.042	ND	UJ	b
4,4'-DDT	0.002	0.0001		0.016	0.057	0.0092	0.055	J	b,k	0.039		0.092	0.022	0.11	J	b,k
Methoxychlor	0.0008	0.0011		0.080	ND	0.076	ND	U	g	0.15		ND	0.18	ND	UJ	b
Endrin Aldehyde	0.0002	0.0003		0.016	ND	0.018	ND	U	g	0.038		ND	0.045	ND	UJ	b
gamma-Chlordane	0.0001	0.0001		0.0038	ND	0.0056	ND	U	g	0.0091		ND	0.013	ND	UJ	b
alpha-Chlordane	0.0001	0.0001		0.0044	ND	0.0079	ND	U	g	0.011		ND	0.019	ND	UJ	b
Toxaphene	0.007	0.009		0.52	ND	0.63	ND	U	g	1.3		ND	1.5	ND	UJ	b
Arochlor 1016	0.009	0.009		0.62	ND	0.60	ND	U	g	1.5		ND	1.4	ND	UJ	b
Arochlor 1242	0.005	0.008		0.38	ND	0.53	ND	U	g	0.91		ND	1.3	ND	UJ	b
Arochlor 1248	0.004	0.005		0.25	ND	0.33	ND	U	g	0.60		ND	0.80	ND	UJ	b
Arochlor 1254	0.011	0.009		0.74	ND	0.64	ND	U	g	1.8		ND	1.5	ND	UJ	b
Arochlor 1260	0.009	0.010		0.60	ND	0.32	ND	U	g	1.5		0.85	0.77	0.91	J	b
Arochlor 1221	0.011	0.010		0.74	ND	0.66	ND	U	g	1.8		ND	1.6	ND	UJ	b
Arochlor 1232	0.005	0.005		0.32	ND	0.03	ND	U	g	0.77		ND	0.08	ND	UJ	b

Base: Kotzebue LRRS
Site: SS12
Extraction Method: EPA Method 3550
Analytical Method: EPA Method 8081
Matrix: Soil
Units: mg/kg

Table 2.1.2
Analytical Data Summary
EPA Method 8081

				Environmental Samples											
			Field ID:		SS12-SB11-3.0ms		SS12-SB11-3.0ms				SS12-SB11-3.0msDL		SS12-SB11-3.0msDL		
			Batch ID:		H607		H607					H607		H607	
	DB-5	DB-608		DB-5	DB-5	DB-608	DB-608			DB-5	DB-5	DB-608	DB-608		
Parameters	MDL	MDL		PQL	Result	PQL	Result	Validity	Comments	PQL	Result Dilution 100	PQL	Result Dilution 100	Validity	Comments
alpha BHC	0.0001	0.0001		0.00021	ND	0.00019	ND	U	g	0.021	ND	0.019	ND	U	g
beta BHC	0.0001	0.0001		0.00032	0.0016	0.00030	ND	U	h	0.032	ND	0.030	ND	U	g
delta BHC	0.0001	0.0001		0.00033	ND	0.00025	ND	U	g	0.033	ND	0.025	ND	U	g
gamma BHC (Lindane)	0.0001	0.0001		0.00026	ND	0.00022	ND	U	g	0.026	ND	0.022	ND	U	g
Heptachlor	0.0001	0.0001		0.0003	ND	0.0003	ND	U	g	0.030	ND	0.030	ND	U	g
Aldrin	0.0001	0.0001		0.00021	ND	0.00027	ND	U	g	0.021	ND	0.027	ND	U	g
Heptachlor Epoxide	0.0001	0.0001		0.00026	ND	0.00033	ND	U	g	0.026	0.011	0.033	ND	U	h
Endosulfan I	0.0001	0.0001		0.00038	ND	0.00038	ND	U	g	0.038	ND	0.038	ND	U	g
Dieldrin	0.0001	0.0002		0.0004	ND	0.0005	ND	U	g	0.041	ND	0.051	ND	U	g
4,4'-DDE	0.0001	0.0002		0.0003	0.21 E**	0.0005	0.21 E**	J	n	0.034	0.43	0.050	0.35		g
Endrin	0.0001	0.0001		0.0003	0.0086	0.0003	0.0038	J	n	0.034	ND	0.035	ND	U	g
Endosulfan II	0.0002	0.0002		0.0005	0.0019	0.00	ND	U	h	0.055	ND	0.053	ND	U	g
4,4'-DDD	0.0001	0.0001		0.0004	0.26	0.0005	1.2		g	0.041	0.27	0.049	0.94		g
Endosulfan Sulfate	0.0002	0.0002		0.0008	ND	0.0008	ND	U	g	0.084	ND	0.084	ND	U	g
4,4'-DDT	0.002	0.0001		0.0008	S*	0.0004	S*	NA	NA	0.078	2.7	0.045	2.7		k
Methoxychlor	0.0008	0.0011		0.0029	ND	0.0037	ND	U	g	0.29	ND	0.37	ND	U	g
Endrin Aldehyde	0.0002	0.0003		0.0008	ND	0.0009	ND	U	g	0.076	ND	0.089	ND	U	g
gamma-Chlordane	0.0001	0.0001		0.00018	ND	0.00027	ND	U	g	0.018	ND	0.027	ND	U	g
alpha-Chlordane	0.0001	0.0001		0.00021	0.0049	0.00038	ND	U	h	0.021	ND	0.038	ND	U	g
Toxaphene	0.007	0.009		0.03	ND	0.03	ND	U	g	2.5	ND	3.1	ND	U	g
Arochlor 1016	0.009	0.009		0.03	ND	0.03	ND	U	g	3.0	ND	2.9	ND	U	g
Arochlor 1242	0.005	0.008		0.02	ND	0.03	ND	U	g	1.8	ND	2.6	ND	U	g
Arochlor 1248	0.004	0.005		0.01	ND	0.02	ND	U	g	1.2	ND	1.6	ND	U	g
Arochlor 1254	0.011	0.009		0.04	ND	0.03	ND	U	g	3.6	ND	3.1	ND	U	g
Arochlor 1260	0.009	0.010		0.03	ND	0.02	ND	U	g	2.9	ND	1.5	ND	U	g
Arochlor 1221	0.011	0.010		0.04	ND	0.03	ND	U	g	3.6	ND	3.2	ND	U	g
Arochlor 1232	0.005	0.005		0.02	ND	0.00	ND	U	g	1.5	ND	0.15	ND	U	g

* No value reported due to saturation of the detector.
** Analyte detected above linear calibration range.

Base: Kotzebue LRRS
Site: SS12
Extraction Method: EPA Method 3550
Analytical Method: EPA Method 8081
Matrix: Soil
Units: mg/kg

Table 2.1.2
Analytical Data Summary
EPA Method 8081

				Environmental Samples											
			Field ID:		SS12-SB12-2.0		SS12-SB12-2.0				SS12-SB12-2.0DL		SS12-SB12-2.0DL		
			Batch ID:		H607		H607				H607		H607		
	DB-5	DB-608		DB-5	DB-5	DB-608	DB-608			DB-5	DB-5	DB-608	DB-608		
Parameters	MDL	MDL		PQL	Result	PQL	Result	Validity	Comments	PQL	Result Dilution 20	PQL	Result Dilution 20	Validity	Comments
alpha BHC	0.0001	0.0001		0.00021	ND	0.00019	ND	U	g	0.0043	ND	0.0038	ND	U	g
beta BHC	0.0001	0.0001		0.00032	0.0035	0.00030	ND	U	h	0.0064	ND	0.0060	ND	U	g
delta BHC	0.0001	0.0001		0.00033	ND	0.00025	ND	U	g	0.0066	ND	0.0049	ND	U	g
gamma BHC (Lindane)	0.0001	0.0001		0.00026	ND	0.00022	ND	U	g	0.0052	ND	0.0043	ND	U	g
Heptachlor	0.0001	0.0001		0.0003	ND	0.0003	ND	U	g	0.0060	ND	0.0059	ND	U	g
Aldrin	0.0001	0.0001		0.00021	ND	0.00027	ND	U	g	0.0042	ND	0.0054	ND	U	g
Heptachlor Epoxide	0.0001	0.0001		0.00026	ND	0.00033	ND	U	g	0.0052	ND	0.0066	ND	U	g
Endosulfan I	0.0001	0.0001		0.00038	ND	0.00038	ND	U	g	0.0076	ND	0.0076	ND	U	g
Dieldrin	0.0001	0.0002		0.0004	ND	0.0005	ND	U	g	0.0081	ND	0.010	ND	U	g
4,4'-DDE	0.0001	0.0002		0.0003	0.032	0.0005	0.032		g	0.0067	0.072	0.010	0.061		g
Endrin	0.0001	0.0001		0.0003	0.0012	0.0003	0.0015		g	0.0067	0.011	0.0069	ND	U	h
Endosulfan II	0.0002	0.0002		0.0005	ND	0.0005	ND	U	g	0.011	ND	0.011	ND	U	g
4,4'-DDD	0.0001	0.0001		0.0004	0.094	0.0005	0.18		g	0.0081	0.083	0.0096	0.14		g
Endosulfan Sulfate	0.0002	0.0002		0.0008	ND	0.0008	ND	U	g	0.017	ND	0.017	ND	U	g
4,4'-DDT	0.002	0.0001		0.0008	0.44 E**	0.0004	0.44 E**	J	k,n	0.015	0.30	0.0089	0.30	J	k
Methoxychlor	0.0008	0.0011		0.0029	ND	0.0036	ND	U	g	0.058	ND	0.073	ND	U	g
Endrin Aldehyde	0.0002	0.0003		0.0008	ND	0.0009	ND	U	g	0.015	ND	0.018	ND	U	g
gamma-Chlordane	0.0001	0.0001		0.00018	ND	0.00027	ND	U	g	0.0036	ND	0.0054	ND	U	g
alpha-Chlordane	0.0001	0.0001		0.00021	0.00007	0.00038	ND	U	h	0.0043	ND	0.0076	ND	U	g
Toxaphene	0.007	0.009		0.02	ND	0.03	ND	U	g	0.50	ND	0.61	ND	U	g
Arochlor 1016	0.009	0.009		0.03	ND	0.03	ND	U	g	0.59	ND	0.57	ND	U	g
Arochlor 1242	0.005	0.008		0.02	ND	0.03	ND	U	g	0.36	ND	0.51	ND	U	g
Arochlor 1248	0.004	0.005		0.01	ND	0.02	ND	U	g	0.24	ND	0.32	ND	U	g
Arochlor 1254	0.011	0.009		0.04	ND	0.03	ND	U	g	0.72	ND	0.61	ND	U	g
Arochlor 1260	0.009	0.010		0.03	ND	0.02	ND	U	g	0.58	ND	0.31	ND	U	g
Arochlor 1221	0.011	0.010		0.04	ND	0.03	ND	U	g	0.71	ND	0.64	ND	U	g
Arochlor 1232	0.005	0.005		0.02	ND	0.00	ND	U	g	0.31	ND	0.03	ND	U	g

** Analyte detected above linear calibration range.

Base: Kotzebue LRRS						Table 2.1.2									
Site: SS12						Analytical Data Summary									
Extraction Method: EPA Method 3550						EPA Method 8081									
Analytical Method: EPA Method 8081															
Matrix: Soil															
Units: mg/kg															
				Environmental Samples											
			Field ID:		SS12-SB2-2.5		SS12-SB2-2.5				SS12-SB2-2.5DL		SS12-SB2-2.5DL		
			Batch ID:		H607		H607				H607		H607		
	DB-5	DB-608		DB-5	DB-5	DB-608	DB-608			DB-5	DB-5	DB-608	DB-608		
Parameters	MDL	MDL		PQL	Result	PQL	Result	Validity	Comments	PQL	Result Dilution 100	PQL	Result Dilution 100	Validity	Comments
alpha BHC	0.0001	0.0001		0.00021	ND	0.00019	ND	U	g	0.021	ND	0.019	ND	U	g
beta BHC	0.0001	0.0001		0.00032	0.011	0.00030	ND	U	h	0.032	ND	0.030	ND	U	g
delta BHC	0.0001	0.0001		0.00033	ND	0.00025	ND	U	g	0.033	0.24	0.025	ND	U	h
gamma BHC (Lindane)	0.0001	0.0001		0.00026	ND	0.00022	ND	U	g	0.026	ND	0.022	ND	U	g
Heptachlor	0.0001	0.0001		0.0003	ND	0.0003	ND	U	g	0.030	ND	0.029	ND	U	g
Aldrin	0.0001	0.0001		0.00021	0.00094	0.00027	ND	U	h	0.021	ND	0.027	ND	U	g
Heptachlor Epoxide	0.0001	0.0001		0.00026	ND	0.00033	ND	U	g	0.026	0.84	0.033	ND	U	h
Endosulfan I	0.0001	0.0001		0.00038	ND	0.00038	ND	U	g	0.038	ND	0.038	ND	U	g
Dieldrin	0.0001	0.0002		0.0004	ND	0.0005	ND	U	g	0.041	ND	0.050	ND	U	g
4,4'-DDE	0.0001	0.0002		0.0003	0.042	0.0005	0.045	J		0.034	0.36	0.050	0.26		g
Endrin	0.0001	0.0001		0.0003	0.0036	0.0003	0.0026	J	n	0.033	ND	0.035	ND	U	g
Endosulfan II	0.0002	0.0002		0.0005	ND	0.0005	ND	U	g	0.054	0.094	0.053	ND	U	h
4,4'-DDD	0.0001	0.0001		0.0004	0.42	0.0005	1.1	J	g	0.041	0.36	0.048	0.80		g
Endosulfan Sulfate	0.0002	0.0002		0.0008	ND	0.0008	ND	U	g	0.083	ND	0.083	ND	U	g
4,4'-DDT	0.002	0.0001		0.0008	S*	0.0004	S*	NA	NA	0.077	2.1	0.044	2.1		k
Methoxychlor	0.0008	0.0011		0.0029	ND	0.0036	ND	U	g	0.29	ND	0.36	ND	U	g
Endrin Aldehyde	0.0002	0.0003		0.0008	0.0004	0.0009	0.0026	J	n	0.075	ND	0.088	ND	U	g
gamma-Chlordane	0.0001	0.0001		0.00018	ND	0.00027	ND	U	g	0.018	ND	0.027	ND	U	g
alpha-Chlordane	0.0001	0.0001		0.00021	0.0016	0.00038	ND	U	h	0.021	ND	0.038	ND	U	g
Toxaphene	0.007	0.009		0.02	ND	0.03	ND	U	g	2.5	ND	3.0	ND	U	g
Arochlor 1016	0.009	0.009		0.03	ND	0.03	ND	U	g	3.0	ND	2.9	ND	U	g
Arochlor 1242	0.005	0.008		0.02	ND	0.03	ND	U	g	1.8	ND	2.6	ND	U	g
Arochlor 1248	0.004	0.005		0.01	ND	0.02	ND	U	g	1.2	ND	1.6	ND	U	g
Arochlor 1254	0.011	0.009		0.04	ND	0.03	ND	U	g	3.6	ND	3.1	ND	U	g
Arochlor 1260	0.009	0.010		0.03	ND	0.02	ND	U	g	2.9	ND	1.5	ND	U	g
Arochlor 1221	0.011	0.010		0.04	ND	0.03	ND	U	g	3.5	ND	3.2	ND	U	g
Arochlor 1232	0.005	0.005		0.02	ND	0.00	ND	U	g	1.5	ND	0.15	ND	U	g

* No value reported due to saturation of the detector.

Base: Kotzebue LRRS

Site: SS12

Extraction Method: EPA Method 3550

Analytical Method: EPA Method 8081

Matrix: Soil

Units: mg/kg

Table 2.1.2

Analytical Data Summary

EPA Method 8081

				Environmental Samples											
			Field ID:		SS12-SB4-2.0		SS12-SB4-2.0				SS12-SB4-2.0DL		SS12-SB4-2.0DL		
			Batch ID:		H607		H607				H607		H607		
	DB-5	DB-608		DB-5	DB-5	DB-608	DB-608			DB-5	DB-5	DB-608	DB-608		
Parameters	MDL	MDL		PQL	Result	PQL	Result	Validity	Comments	PQL	Result Dilution 50	PQL	Result Dilution 50	Validity	Comments
alpha BHC	0.0001	0.0001		0.00022	0.0029	0.00019	0.0040	J	n	0.011	ND	0.0097	ND	U	g
beta BHC	0.0001	0.0001		0.00033	0.0032	0.00031	0.0059	J	n	0.016	ND	0.015	ND	U	g
delta BHC	0.0001	0.0001		0.00034	ND	0.00025	ND	U	g	0.017	ND	0.013	ND	U	g
gamma BHC (Lindane)	0.0001	0.0001		0.00027	0.0085	0.00022	0.0028	J	n	0.013	0.071	0.011	ND	U	b,h
Heptachlor	0.0001	0.0001		0.0003	0.0035	0.0003	0.0007	J	n	0.015	ND	0.015	ND	U	g
Aldrin	0.0001	0.0001		0.00021	ND	0.00027	ND	U	g	0.011	ND	0.014	ND	U	g
Heptachlor Epoxide	0.0001	0.0001		0.00027	0.0012	0.00034	0.0062	J	n	0.013	0.13	0.017	ND	U	b,h
Endosulfan I	0.0001	0.0001		0.00039	ND	0.00039	ND	U	g	0.019	ND	0.019	ND	U	g
Dieldrin	0.0001	0.0002		0.0004	ND	0.0005	ND	U	g	0.021	ND	0.026	ND	U	g
4,4'-DDE	0.0001	0.0002		0.0003	0.020	0.0005	0.022		g	0.017	0.12	0.026	0.10	J	b
Endrin	0.0001	0.0001		0.0003	0.0038	0.0004	0.0066	J	n	0.017	ND	0.018	ND	U	g
Endosulfan II	0.0002	0.0002		0.0006	ND	0.0005	ND	U	g	0.028	ND	0.027	ND	U	g
4,4'-DDD	0.0001	0.0001		0.0004	0.098	0.0005	0.29		g	0.021	0.13	0.025	0.16	J	b
Endosulfan Sulfate	0.0002	0.0002		0.0008	ND	0.0008	ND	U	g	0.042	ND	0.042	ND	U	g
4,4'-DDT	0.002	0.0001		0.0008	0.83 E**	0.0005	0.86 E**	J	k,n	0.039	0.56	0.023	0.55	J	b,k
Methoxychlor	0.0008	0.0011		0.0029	0.0026	0.0037	ND	U	h	0.15	ND	0.19	ND	U	g
Endrin Aldehyde	0.0002	0.0003		0.0008	ND	0.0009	ND	U	g	0.038	ND	0.045	ND	U	g
gamma-Chlordane	0.0001	0.0001		0.00018	0.0025	0.00027	0.0033	J	n	0.0092	ND	0.014	ND	U	g
alpha-Chlordane	0.0001	0.0001		0.00022	0.0029	0.00039	ND	U	h	0.011	ND	0.019	ND	U	g
Toxaphene	0.007	0.009		0.03	ND	0.03	ND	U	g	1.3	ND	1.6	ND	U	g
Arochlor 1016	0.009	0.009		0.03	ND	0.03	ND	U	g	1.5	ND	1.5	ND	U	g
Arochlor 1242	0.005	0.008		0.02	ND	0.03	ND	U	g	0.92	ND	1.3	ND	U	g
Arochlor 1248	0.004	0.005		0.01	ND	0.02	ND	U	g	0.60	ND	0.82	ND	U	g
Arochlor 1254	0.011	0.009		0.04	ND	0.03	ND	U	g	1.8	ND	1.6	ND	U	g
Arochlor 1260	0.009	0.010		0.03	ND	0.02	ND	U	g	1.5	ND	0.78	ND	U	g
Arochlor 1221	0.011	0.010		0.04	ND	0.03	ND	U	g	1.8	ND	1.6	ND	U	g
Arochlor 1232	0.005	0.005		0.02	ND	0.00	ND	U	g	0.78	ND	0.08	ND	U	g

** Analyte detected above linear calibration range.

Base: Kotzebue LRRS						Table 2.1.2									
Site: SS12						Analytical Data Summary									
Extraction Method: EPA Method 3550						EPA Method 8081									
Analytical Method: EPA Method 8081															
Matrix: Soil															
Units: mg/kg															
				Environmental Samples											
			Field ID:		SS12-SB7-1.5		SS12-SB7-1.5				SS12-SB9-2.0		SS12-SB9-2.0		
			Batch ID:		H607		H607				H607		H607		
	DB-5	DB-608		DB-5	DB-5	DB-608	DB-608			DB-5	DB-5	DB-608	DB-608		
Parameters	MDL	MDL		PQL	Result	PQL	Result	Validity	Comments	PQL	Result	PQL	Result	Validity	Comments
											Dilution 50		Dilution 50		
alpha BHC	0.0001	0.0001		0.00022	0.0015	0.00020	0.0018		g	0.011	ND	0.010	ND	UJ	b
beta BHC	0.0001	0.0001		0.00034	ND	0.00031	ND	U	g	0.017	ND	0.016	ND	UJ	b
delta BHC	0.0001	0.0001		0.00034	ND	0.00026	ND	U	g	0.018	ND	0.013	ND	UJ	b
gamma BHC (Lindane)	0.0001	0.0001		0.00027	0.0011	0.00023	0.018	J	n	0.014	ND	0.011	ND	UJ	b
Heptachlor	0.0001	0.0001		0.0003	ND	0.0003	ND	U	g	0.016	ND	0.016	ND	UJ	b
Aldrin	0.0001	0.0001		0.00022	ND	0.00028	ND	U	g	0.011	ND	0.014	ND	UJ	b
Heptachlor Epoxide	0.0001	0.0001		0.00027	ND	0.00034	ND	U	g	0.014	ND	0.018	ND	UJ	b
Endosulfan I	0.0001	0.0001		0.00040	ND	0.00040	ND	U	g	0.020	ND	0.020	ND	UJ	b
Dieldrin	0.0001	0.0002		0.0004	0.0028	0.0005	0.0043	J	n	0.022	ND	0.027	ND	UJ	b
4,4'-DDE	0.0001	0.0002		0.0004	0.0023	0.0005	0.0033		g	0.018	0.12	0.026	0.11	J	b
Endrin	0.0001	0.0001		0.0003	ND	0.0004	ND	U	g	0.018	0.048	0.018	0.089	J	b,n
Endosulfan II	0.0002	0.0002		0.0006	ND	0.0006	ND	U	g	0.029	ND	0.028	ND	UJ	b
4,4'-DDD	0.0001	0.0001		0.0004	0.0024	0.0005	0.0041	J	g	0.022	0.55	0.026	0.55	J	b
Endosulfan Sulfate	0.0002	0.0002		0.0009	ND	0.0009	ND	U	g	0.044	ND	0.044	ND	UJ	b
4,4'-DDT	0.002	0.0001		0.0008	0.0059	0.0005	0.0058		k	0.041	0.076	0.023	0.11	J	b,k
Methoxychlor	0.0008	0.0011		0.0030	ND	0.0038	ND	U	g	0.15	ND	0.19	ND	UJ	b
Endrin Aldehyde	0.0002	0.0003		0.0008	0.0011	0.0009	ND	U	h	0.040	ND	0.047	ND	UJ	b
gamma-Chlordane	0.0001	0.0001		0.00019	0.0024	0.00028	ND	U	h	0.0096	ND	0.014	ND	UJ	b
alpha-Chlordane	0.0001	0.0001		0.00022	0.00062	0.00040	ND	U	h	0.011	ND	0.020	ND	UJ	b
Toxaphene	0.007	0.009		0.03	ND	0.03	ND	U	g	1.3	ND	1.6	ND	UJ	b
Arochlor 1016	0.009	0.009		0.03	ND	0.03	ND	U	g	1.6	ND	1.5	ND	UJ	b
Arochlor 1242	0.005	0.008		0.02	ND	0.03	ND	U	g	0.96	ND	1.4	ND	UJ	b
Arochlor 1248	0.004	0.005		0.01	ND	0.02	ND	U	g	0.63	ND	0.85	ND	UJ	b
Arochlor 1254	0.011	0.009		0.04	ND	0.03	ND	U	g	1.9	ND	1.6	ND	UJ	b
Arochlor 1260	0.009	0.010		0.03	ND	0.02	ND	U	g	1.5	0.96	0.81	0.87	J	b
Arochlor 1221	0.011	0.010		0.04	ND	0.03	ND	U	g	1.9	ND	1.7	ND	UJ	b
Arochlor 1232	0.005	0.005		0.02	ND	0.00	ND	U	g	0.81	ND	0.08	ND	UJ	b

Base: Kotzebue LRRS							Table 2.1.2								
Site: SS12							Analytical Data Summary								
Extraction Method: EPA Method 3550							EPA Method 8081								
Analytical Method: EPA Method 8081															
Matrix: Soil															
Units: mg/kg															
				Environmental Samples											
			Field ID:		SS12-SB16-1.5		SS12-SB16-1.5				SS12-SB16-1.5DL		SS12-SB16-1.5DL		
			Batch ID:		H615		H615				H615		H615		
	DB-5	DB-608		DB-5	DB-5	DB-608	DB-608			DB-5	DB-5	DB-608	DB-608		
Parameters	MDL	MDL		PQL	Result	PQL	Result	Validity	Comments	PQL	Result	PQL	Result	Validity	Comments
					Dilution 10		Dilution 10				Dilution 100		Dilution 100		
alpha BHC	0.0001	0.0001		0.0030	0.032	0.0027	ND	U	h	0.030	0.19	0.027	ND	U	b,h
beta BHC	0.0001	0.0001		0.0045	0.029	0.0042	ND	U	h	0.045	ND	0.042	ND	U	g
delta BHC	0.0001	0.0001		0.0046	0.048	0.0035	ND	U	h	0.046	0.20	0.035	ND	U	b,h
gamma BHC (Lindane)	0.0001	0.0001		0.0037	0.017	0.0030	ND	U	h	0.037	ND	0.030	ND	U	g
Heptachlor	0.0001	0.0001		0.0042	ND	0.0041	ND	U	g	0.042	ND	0.041	ND	U	g
Aldrin	0.0001	0.0001		0.0029	ND	0.0038	ND	U	g	0.029	ND	0.038	ND	U	g
Heptachlor Epoxide	0.0001	0.0001		0.0037	0.27	0.0046	ND	U	a,h	0.037	0.13	0.046	ND	U	a,b,h
Endosulfan I	0.0001	0.0001		0.0053	ND	0.0053	ND	U	g	0.053	ND	0.053	ND	U	g
Dieldrin	0.0001	0.0002		0.0057	ND	0.0071	ND	U	g	0.057	ND	0.071	ND	U	g
4,4'-DDE	0.0001	0.0002		0.0047	0.087	0.0070	0.10		g	0.047	0.33	0.070	0.28	J	b
Endrin	0.0001	0.0001		0.0047	0.019	0.0048	0.031	J	a,n	0.047	0.074	0.048	ND	U	a,b,h
Endosulfan II	0.0002	0.0002		0.0076	0.019	0.0074	ND	U	h	0.076	0.16	0.074	ND	U	b,h
4,4'-DDD	0.0001	0.0001		0.0057	1.7 E**	0.0068	1.8 E**	J	k,n	0.057	0.90	0.068	0.85	J	b,k
Endosulfan Sulfate	0.0002	0.0002		0.012	ND	0.012	ND	U	g	0.12	ND	0.12	ND	U	g
4,4'-DDT	0.002	0.0001		0.011	0.097	0.0062	0.093		a	0.11	0.17	0.062	0.16	J	a,b
Methoxychlor	0.0008	0.0011		0.040	ND	0.051	ND	U	g	0.40	ND	0.51	ND	U	g
Endrin Aldehyde	0.0002	0.0003		0.011	0.024	0.012	ND	U	h	0.11	ND	0.12	ND	U	g
gamma-Chlordane	0.0001	0.0001		0.0025	ND	0.0038	ND	U	g	0.025	ND	0.038	ND	U	g
alpha-Chlordane	0.0001	0.0001		0.0030	0.014	0.0053	ND	U	h	0.030	ND	0.053	ND	U	g
Toxaphene	0.007	0.009		0.35	ND	0.43	ND	U	g	3.5	ND	4.3	ND	U	g
Arochlor 1016	0.009	0.009		0.42	ND	0.40	ND	U	g	4.2	ND	4.0	ND	U	g
Arochlor 1242	0.005	0.008		0.25	ND	0.36	ND	U	g	2.5	ND	3.6	ND	U	g
Arochlor 1248	0.004	0.005		0.17	ND	0.22	ND	U	g	1.7	ND	2.2	ND	U	g
Arochlor 1254	0.011	0.009		0.50	ND	0.43	ND	U	g	5.0	ND	4.3	ND	U	g
Arochlor 1260	0.009	0.010		0.41	ND	0.21	ND	U	g	4.1	ND	2.1	ND	U	g
Arochlor 1221	0.011	0.010		0.50	ND	0.45	ND	U	g	5.0	ND	4.5	ND	U	g
Arochlor 1232	0.005	0.005		0.21	ND	0.02	ND	U	g	2.1	ND	0.21	ND	U	g

** Analyte detected above linear calibration range.

Base: Kotzebue LRRS							Table 2.1.2								
Site: SS12							Analytical Data Summary								
Extraction Method: EPA Method 3550							EPA Method 8081								
Analytical Method: EPA Method 8081															
Matrix: Soil															
Units: mg/kg															
				Environmental Samples											
			Field ID:		SS12-SB20-1.0		SS12-SB20-1.0				SS12-SB23-0.5		SS12-SB23-0.5		
			Batch ID:		H615		H615				H615		H615		
	DB-5	DB-608		DB-5	DB-5	DB-608	DB-608			DB-5	DB-5	DB-608	DB-608		
Parameters	MDL	MDL		PQL	Result	PQL	Result	Validity	Comments	PQL	Result	PQL	Result	Validity	Comments
					Dilution 10		Dilution 10				Dilution 10		Dilution 10		
alpha BHC	0.0001	0.0001		0.0077	0.077	0.0068	ND	U	b,h	0.013	ND	0.011	ND	U	g
beta BHC	0.0001	0.0001		0.012	0.039	0.011	ND	U	b,h	0.019	ND	0.018	ND	U	g
delta BHC	0.0001	0.0001		0.012	0.083	0.0089	0.055	J	b	0.020	ND	0.015	ND	U	g
gamma BHC (Lindane)	0.0001	0.0001		0.0094	ND	0.0078	ND	UJ	b	0.015	ND	0.013	ND	U	g
Heptachlor	0.0001	0.0001		0.011	ND	0.011	ND	UJ	b	0.018	ND	0.017	ND	U	g
Aldrin	0.0001	0.0001		0.0075	ND	0.0097	ND	UJ	b	0.012	ND	0.016	ND	U	g
Heptachlor Epoxide	0.0001	0.0001		0.0094	0.39	0.012	0.010	J	a,b,n	0.015	0.081	0.020	ND	U	a,b,h
Endosulfan I	0.0001	0.0001		0.014	ND	0.014	ND	UJ	b	0.023	ND	0.023	ND	U	g
Dieldrin	0.0001	0.0002		0.015	ND	0.018	ND	UJ	b	0.024	ND	0.030	ND	U	g
4,4'-DDE	0.0001	0.0002		0.012	0.16	0.018	0.14	J	b	0.020	0.14	0.030	0.14	J	b
Endrin	0.0001	0.0001		0.012	ND	0.012	ND	UJ	a,b	0.020	0.039	0.021	ND	U	a,b,h
Endosulfan II	0.0002	0.0002		0.020	0.083	0.019	ND	U	b,h	0.032	0.075	0.031	ND	U	b,h
4,4'-DDD	0.0001	0.0001		0.015	1.1	0.017	1.1	J	b,k	0.024	0.42	0.029	0.41	J	b,k
Endosulfan Sulfate	0.0002	0.0002		0.030	ND	0.030	ND	UJ	b	0.049	ND	0.049	ND	U	g
4,4'-DDT	0.002	0.0001		0.028	0.093	0.016	0.098	J	a,b	0.046	0.091	0.026	0.10	J	a,b
Methoxychlor	0.0008	0.0011		0.10	ND	0.13	ND	UJ	b	0.17	ND	0.22	ND	U	g
Endrin Aldehyde	0.0002	0.0003		0.027	0.044	0.032	ND	U	b,h	0.045	ND	0.052	ND	U	g
gamma-Chlordane	0.0001	0.0001		0.0065	ND	0.0097	ND	UJ	b	0.011	ND	0.016	ND	U	g
alpha-Chlordane	0.0001	0.0001		0.0077	0.040	0.014	ND	U	b,h	0.013	ND	0.023	ND	U	g
Toxaphene	0.007	0.009		0.90	ND	1.1	ND	UJ	b	1.5	ND	1.8	ND	U	g
Arochlor 1016	0.009	0.009		1.1	ND	1.0	ND	UJ	b	1.8	ND	1.7	ND	U	g
Arochlor 1242	0.005	0.008		0.65	ND	0.92	ND	UJ	b	1.1	ND	1.5	ND	U	g
Arochlor 1248	0.004	0.005		0.43	ND	0.57	ND	UJ	b	0.70	ND	0.95	ND	U	g
Arochlor 1254	0.011	0.009		1.3	ND	1.1	ND	UJ	b	2.1	ND	1.8	ND	U	g
Arochlor 1260	0.009	0.010		1.0	ND	0.55	ND	UJ	b	1.7	ND	0.91	ND	U	g
Arochlor 1221	0.011	0.010		1.3	ND	1.1	ND	UJ	b	2.1	ND	1.9	ND	U	g
Arochlor 1232	0.005	0.005		0.55	ND	0.06	ND	UJ	b	0.91	ND	0.09	ND	U	g

Base: Kotzebue LRRS							Table 2.1.2			
Site: SS12							Analytical Data Summary			
Extraction Method: EPA Method 3550							EPA Method 8081			
Analytical Method: EPA Method 8081										
Matrix: Soil										
Units: mg/kg										
				Environmental Samples						
			Field ID:		SS12-SD4		SS12-SD4			
			Batch ID:		H746		H746			
	DB-5	DB-608		DB-5	DB-5	DB-608	DB-608			
Parameters	MDL	MDL		PQL	Result	PQL	Result	Validity	Comments	
alpha BHC	0.0001	0.0001		0.00033	ND	0.00030	ND	U	g	
beta BHC	0.0001	0.0001		0.00050	0.0038	0.00047	ND	U	h	
delta BHC	0.0001	0.0001		0.00051	ND	0.00038	ND	U	g	
gamma BHC (Lindane)	0.0001	0.0001		0.00041	0.0021	0.00034	ND	U	h	
Heptachlor	0.0001	0.0001		0.0005	ND	0.0005	ND	U	g	
Aldrin	0.0001	0.0001		0.00032	ND	0.00042	ND	U	g	
Heptachlor Epoxide	0.0001	0.0001		0.00041	ND	0.00051	ND	U	g	
Endosulfan I	0.0001	0.0001		0.00059	ND	0.00059	ND	U	g	
Dieldrin	0.0001	0.0002		0.0006	0.0010	0.0008	0.0015		g	
4,4'-DDE	0.0001	0.0002		0.0005	0.0040	0.0008	0.0034		g	
Endrin	0.0001	0.0001		0.0005	0.0015	0.0005	ND	U	a,h	
Endosulfan II	0.0002	0.0002		0.0008	0.0050	0.0008	ND	U	a,h	
4,4'-DDD	0.0001	0.0001		0.0006	0.0040	0.0007	0.0041		g	
Endosulfan Sulfate	0.0002	0.0002		0.0013	ND	0.0013	ND	U	g	
4,4'-DDT	0.002	0.0001		0.0012	0.0036	0.0007	0.0038		g	
Methoxychlor	0.0008	0.0011		0.0045	ND	0.0056	ND	U	g	
Endrin Aldehyde	0.0002	0.0003		0.0012	0.0019	0.0014	ND	U	h	
gamma-Chlordane	0.0001	0.0001		0.00028	0.00038	0.00042	ND	U	h	
alpha-Chlordane	0.0001	0.0001		0.00033	ND	0.00059	ND	U	g	
Toxaphene	0.007	0.009		0.04	ND	0.05	ND	U	g	
Arochlor 1016	0.009	0.009		0.05	ND	0.04	ND	U	g	
Arochlor 1242	0.005	0.008		0.03	ND	0.04	ND	U	g	
Arochlor 1248	0.004	0.005		0.02	ND	0.02	ND	U	g	
Arochlor 1254	0.011	0.009		0.06	ND	0.05	ND	U	g	
Arochlor 1260	0.009	0.010		0.05	ND	0.02	ND	U	g	
Arochlor 1221	0.011	0.010		0.06	ND	0.05	ND	U	g	
Arochlor 1232	0.005	0.005		0.02	ND	0.00	ND	U	g	

Base: Kotzebue LRRS
Site: SS12
Extraction Method: EPA Method 3550
Analytical Method: EPA Method 8081
Matrix: Soil
Units: mg/kg

Table 2.1.2
Analytical Data Summary
EPA Method 8081

			Environmental Samples						
			Field ID:		SS12-SD5-01		SS12-SD5-01		
			Batch ID:		H859		H859		
	DB-5	DB-608		DB-5	DB-5	DB-608	DB-608		
Parameters	MDL	MDL		PQL	Result	PQL	Result	Validity	Comments
alpha BHC	0.0001	0.0001		0.00047	0.0045	0.00042	0.0058	J	e
beta BHC	0.0001	0.0001		0.00071	ND	0.00086	ND	UJ	e
delta BHC	0.0001	0.0001		0.00073	0.0038	0.00054	0.0012	J	e,n
gamma BHC (Lindane)	0.0001	0.0001		0.00057	ND	0.00048	ND	UJ	e
Heptachlor	0.0001	0.0001		0.0007	ND	0.0006	ND	UJ	e
Aldrin	0.0001	0.0001		0.00046	0.0031	0.00059	0.0033	J	e,n
Heptachlor Epoxide	0.0001	0.0001		0.00057	0.0017	0.00073	0.0043	B J	e,n
Endosulfan I	0.0001	0.0001		0.00084	ND	0.00084	ND	UJ	e
Dieldrin	0.0001	0.0002		0.0009	ND	0.0011	ND	UJ	e
4,4'-DDE	0.0001	0.0002		0.0007	0.0066	0.0011	0.0055	J	e
Endrin	0.0001	0.0001		0.0007	0.0048	0.0008	ND	U	a,e,h
Endosulfan II	0.0002	0.0002		0.0012	ND	0.0012	ND	UJ	e
4,4'-DDD	0.0001	0.0001		0.0009	0.014	0.0011	0.013	J	a,e
Endosulfan Sulfate	0.0002	0.0002		0.0018	ND	0.0018	ND	UJ	e
4,4'-DDT	0.002	0.0001		0.0017	0.0076	0.0010	0.0061	J	e
Methoxychlor	0.0008	0.0011		0.0063	ND	0.0080	ND	UJ	e
Endrin Aldehyde	0.0002	0.0003		0.0017	0.0012	0.0019	ND	U	e,h
gamma-Chlordane	0.0001	0.0001		0.00040	ND	0.00059	ND	UJ	e
alpha-Chlordane	0.0001	0.0001		0.00047	0.0031	0.00084	0.0013	J	e,n
Toxaphene	0.007	0.009		0.05	ND	0.07	ND	UJ	e
Arochlor 1016	0.009	0.009		0.07	ND	0.06	ND	UJ	e
Arochlor 1242	0.005	0.008		0.04	ND	0.06	ND	UJ	e
Arochlor 1248	0.004	0.005		0.008	ND	0.08	ND	UJ	e
Arochlor 1254	0.011	0.009		0.08	ND	0.07	ND	UJ	e
Arochlor 1260	0.009	0.010		0.06	ND	0.03	ND	UJ	e
Arochlor 1221	0.011	0.010		0.08	ND	0.07	ND	UJ	e
Arochlor 1232	0.005	0.005		0.03	ND	0.00	ND	UJ	e

Base: Kotzebue LRRS						Table 6.2.1.3								
Site: SS12						Analytical Data Summary								
Extraction Method: EPA Method 5030						EPA Method 8260								
Analytical Method: EPA Method 8260														
Matrix: Soil														
Units: mg/kg														
			Environmental Samples											
		Field ID:		SS12-SB1-1.5				SS12-SB10-2.0				SS12-SB11-3.0ms		
		Batch ID:		H607				H607				H607		
Parameters	MDL		PQL	Result	Validity	Comments	PQL	Result	Validity	Comments	PQL	Result	Validity	Comments
Chloromethane	0.0009		0.36	ND	U	g	0.40	ND	U	g	0.003	ND	U	g
Bromomethane	0.0008		0.33	ND	U	g	0.37	ND	U	g	0.003	ND	U	g
Vinyl Chloride	0.0010		0.38	ND	U	g	0.43	ND	U	g	0.003	ND	U	g
Chloroethane	0.0010		0.41	ND	U	g	0.45	ND	U	g	0.003	ND	U	g
Methylene Chloride	0.0009		0.35	0.48		a	0.39	0.20	B J	a	0.003	0.001	B J	a
Acetone	0.0039		1.6	ND	U	g	1.8	3.5	B J	a	0.01	ND	U	a
Carbon Disulfide	0.0005		0.22	ND	U	g	0.24	ND	U	g	0.002	ND	U	g
1,1-Dichloroethene	0.0012		0.47	ND	U	g	0.52	ND	U	g	0.004	ND	U	g
1,1-Dichloroethane	0.0004		0.15	ND	U	g	0.16	ND	U	g	0.001	ND	U	g
trans-1,2-Dichloroethene	0.0009		0.36	ND	U	g	0.40	ND	U	g	0.003	ND	U	g
cis-1,2-Dichloroethene	0.0011		0.46	ND	U	g	0.51	ND	U	g	0.004	ND	U	g
Chloroform	0.0005		0.19	ND	U	k	0.21	ND	U	k	0.001	ND	U	k
1,2-Dichloroethane	0.0005		0.20	ND	U	g	0.22	ND	U	g	0.002	ND	U	g
Methyl Ethyl Ketone (2-butanone)	0.0025		1.0	ND	U	g	1.1	ND	U	g	0.008	ND	U	g
1,1,1-Trichloroethane	0.0004		0.17	ND	U	g	0.19	ND	U	g	0.001	ND	U	g
Carbon Tetrachloride	0.0010		0.40	ND	U	g	0.44	ND	U	g	0.003	ND	U	g
Vinyl Acetate	0.0016		0.65	ND	U	g	0.72	ND	U	g	0.005	ND	U	g
Bromodichloromethane	0.0006		0.26	ND	U	g	0.29	ND	U	g	0.002	ND	U	g
1,2-Dichloropropane	0.0008		0.34	ND	U	g	0.38	ND	U	g	0.003	ND	U	g
cis-1,3-Dichloropropene	0.0007		0.28	ND	U	g	0.31	ND	U	g	0.002	ND	U	g
Trichloroethene (tce)	0.0005		0.22	ND	U	g	0.24	ND	U	g	0.002	0.001	J	
Dibromochloromethane	0.0003		0.14	ND	U	g	0.15	ND	U	g	0.001	ND	U	g
1,1,2-Trichloroethane	0.0007		0.28	ND	U	g	0.31	ND	U	g	0.002	ND	U	g
Benzene	0.0005		0.19	ND	U	g	0.21	ND	U	g	0.0015	ND	U	g

Base: Kotzebue LRRS
Site: SS12
Extraction Method: EPA Method 5030
Analytical Method: EPA Method 8260
Matrix: Soil
Units: mg/kg

Table 6.2.1.3
Analytical Data Summary
EPA Method 8260

			Environmental Samples											
		Field ID:		SS12-SB1-1.5				SS12-SB10-2.0			SS12-SB11-3.0ms			
		Batch ID:		H607				H607				H607		
Parameters	MDL		PQL	Result	Validity	Comments	PQL	Result	Validity	Comments	PQL	Result	Validity	Comments
trans-1,3-Dichloropropene	0.0005		0.21	ND	U	g	0.24	ND	U	g	0.002	ND	U	g
2-Chloroethyl Vinyl Ether	0.0006		0.26	ND	U	g	0.29	ND	U	g	0.002	ND	U	g
Bromoform	0.0013		0.51	ND	U	g	0.57	ND	U	g	0.004	ND	U	g
Methyl Isobutyl Ketone	0.0015		0.61	ND	U	g	0.67	ND	U	g	0.005	ND	U	g
2-Hexanone	0.0027		1.1	ND	U	g	1.2	ND	U	g	0.009	ND	U	g
Tetrachloroethene (pce)	0.0009		0.36	ND	U	g	0.40	ND	U	g	0.003	ND	U	g
1,1,2,2-Tetrachloroethane	0.0009		0.37	ND	U	k	0.41	ND	U	k	0.0029	ND	U	k
Toluene	0.0009		0.37	ND	U	g	0.41	ND	U	g	0.0029	ND	U	g
Chlorobenzene	0.0007		0.29	ND	U	g	0.32	ND	U	g	0.002	ND	U	g
Ethylbenzene	0.0004		0.17	ND	U	g	0.19	ND	U	g	0.0014	ND	U	g
Styrene	0.0006		0.26	ND	U	g	0.29	ND	U	g	0.002	ND	U	g
1,1,2-Trichloro-1,2,2-trifluoroethane	0.0007		0.30	ND	U	g	0.33	ND	U	g	0.002	ND	U	g
Xylenes, total	0.0020		0.81	ND	U	g	0.90	ND	U	g	0.006	ND	U	g
1,1,1,2-Tetrachloroethane	0.0010		0.40	ND	U	g	0.45	ND	U	g	0.003	ND	U	g
1,2,3-Trichloropropane	0.0023		0.91	ND	U	g	1.0	ND	U	g	0.007	ND	U	g
Bromochloromethane	0.0007		0.27	ND	U	g	0.30	ND	U	g	0.002	ND	U	g
1-Chlorohexane	0.0007		0.27	ND	U	g	0.30	ND	U	g	0.002	ND	U	g
Bromobenzene	0.0007		0.30	ND	U	g	0.33	ND	U	g	0.0024	ND	U	g

Base: Kotzebue LRRS						Table 6.2.1.3								
Site: SS12						Analytical Data Summary								
Extraction Method: EPA Method 5030						EPA Method 8260								
Analytical Method: EPA Method 8260														
Matrix: Soil														
Units: mg/kg														
			Environmental Samples											
		Field ID:		SS12-SB12-2.0				SS12-SB2-2.5				SS12-SB4-2.0		
		Batch ID:		H607				H607				H607		
Parameters	MDL		PQL	Result	Validity	Comments	PQL	Result	Validity	Comments	PQL	Result	Validity	Comments
Chloromethane	0.0009		0.34	ND	U	g	0.37	ND	U	g	0.36	ND	U	g
Bromomethane	0.0008		0.32	ND	U	g	0.34	ND	U	g	0.34	ND	U	g
Vinyl Chloride	0.0010		0.37	ND	U	g	0.40	ND	U	g	0.39	ND	U	g
Chloroethane	0.0010		0.39	ND	U	g	0.42	ND	U	g	0.42	ND	U	g
Methylene Chloride	0.0009		0.34	0.39		a	0.36	0.43		a	0.35	0.32	J	a
Acetone	0.0039		1.5	0.74	J		1.6	ND	U	g	1.6	ND	U	g
Carbon Disulfide	0.0005		0.21	ND	U	g	0.23	ND	U	g	0.22	ND	U	g
1,1-Dichloroethene	0.0012		0.45	ND	U	g	0.49	ND	U	g	0.48	ND	U	g
1,1-Dichloroethane	0.0004		0.14	ND	U	g	0.15	ND	U	g	0.15	ND	U	g
trans-1,2-Dichloroethene	0.0009		0.34	ND	U	g	0.37	ND	U	g	0.36	ND	U	g
cis-1,2-Dichloroethene	0.0011		0.44	ND	U	g	0.48	ND	U	g	0.47	ND	U	g
Chloroform	0.0005		0.18	ND	U	k	0.19	ND	U	k	0.19	ND	U	k
1,2-Dichloroethane	0.0005		0.19	ND	U	g	0.21	ND	U	g	0.21	ND	U	g
Methyl Ethyl Ketone (2-butanone)	0.0025		0.96	ND	U	g	1.0	ND	U	g	1.0	ND	U	g
1,1,1-Trichloroethane	0.0004		0.17	ND	U	g	0.18	ND	U	g	0.18	ND	U	g
Carbon Tetrachloride	0.0010		0.38	ND	U	g	0.41	ND	U	g	0.40	ND	U	g
Vinyl Acetate	0.0016		0.63	ND	U	g	0.67	ND	U	g	0.66	ND	U	g
Bromodichloromethane	0.0006		0.25	ND	U	g	0.27	ND	U	g	0.27	ND	U	g
1,2-Dichloropropane	0.0008		0.33	ND	U	g	0.35	ND	U	g	0.35	ND	U	g
cis-1,3-Dichloropropene	0.0007		0.27	ND	U	g	0.29	ND	U	g	0.28	ND	U	g
Trichloroethene (tce)	0.0005		0.21	ND	U	g	0.23	ND	U	g	0.22	ND	U	g
Dibromochloromethane	0.0003		0.13	ND	U	g	0.14	ND	U	g	0.14	ND	U	g
1,1,2-Trichloroethane	0.0007		0.27	ND	U	g	0.29	ND	U	g	0.28	ND	U	g
Benzene	0.0005		0.18	ND	U	g	0.20	ND	U	g	0.19	ND	U	g

Base: Kotzebue LRRS
Site: SS12
Extraction Method: EPA Method 5030
Analytical Method: EPA Method 8260
Matrix: Soil
Units: mg/kg

Table 6.2.1.3
Analytical Data Summary
EPA Method 8260

			Environmental Samples											
		Field ID:		SS12-SB12-2.0				SS12-SB2-2.5				SS12-SB4-2.0		
		Batch ID:		H607				H607				H607		
Parameters	MDL		PQL	Result	Validity	Comments	PQL	Result	Validity	Comments	PQL	Result	Validity	Comments
trans-1,3-Dichloropropene	0.0005		0.21	ND	U	g	0.22	ND	U	g	0.22	ND	U	g
2-Chloroethyl Vinyl Ether	0.0006		0.25	ND	U	g	0.27	ND	U	g	0.26	ND	U	g
Bromoform	0.0013		0.49	ND	U	g	0.53	ND	U	g	0.52	ND	U	g
Methyl Isobutyl Ketone	0.0015		0.58	ND	U	g	0.63	ND	U	g	0.62	ND	U	g
2-Hexanone	0.0027		1.1	ND	U	g	1.1	ND	U	g	1.1	ND	U	g
Tetrachloroethene (pce)	0.0009		0.35	ND	U	g	0.38	ND	U	g	0.37	ND	U	g
1,1,2,2-Tetrachloroethane	0.0009		0.35	ND	U	g	0.38	ND	U	g	0.37	ND	U	g
Toluene	0.0009		0.35	ND	U	k	0.38	ND	U	k	0.37	ND	U	k
Chlorobenzene	0.0007		0.28	ND	U	g	0.30	ND	U	g	0.30	ND	U	g
Ethylbenzene	0.0004		0.17	ND	U	g	0.18	ND	U	g	0.18	ND	U	g
Styrene	0.0006		0.25	ND	U	g	0.27	ND	U	g	0.26	ND	U	g
1,1,2-Trichloro-1,2,2-trifluoroethane	0.0007		0.29	ND	U	g	0.31	ND	U	g	0.30	ND	U	g
Xylenes, total	0.0020		0.78	ND	U	g	0.84	ND	U	g	0.83	ND	U	g
1,1,1,2-Tetrachloroethane	0.0010		0.39	ND	U	g	0.42	ND	U	g	0.41	ND	U	g
1,2,3-Trichloropropane	0.0023		0.88	ND	U	g	0.95	ND	U	g	0.93	ND	U	g
Bromochloromethane	0.0007		0.26	ND	U	g	0.28	ND	U	g	0.28	ND	U	g
1-Chlorohexane	0.0007		0.26	ND	U	g	0.28	ND	U	g	0.27	ND	U	g
Bromobenzene	0.0007		0.28	ND	U	g	0.31	ND	U	g	0.30	ND	U	g

Base: Kotzebue LRRS
Site: SS12
Extraction Method: EPA Method 5030
Analytical Method: EPA Method 8260
Matrix: Soil
Units: mg/kg

Table 6.2.1.3
Analytical Data Summary
EPA Method 8260

			Environmental Samples							
		Field ID:		SS12-SB7-1.5				SS12-SB9-2.0		
		Batch ID:		H607				H607		
Parameters	MDL		PQL	Result	Validity	Comments	PQL	Result	Validity	Comments
Chloromethane	0.0009		0.37	ND	U	g	0.36	ND	U	g
Bromomethane	0.0008		0.34	ND	U	g	0.34	ND	U	g
Vinyl Chloride	0.0010		0.39	ND	U	g	0.39	ND	U	g
Chloroethane	0.0010		0.42	ND	U	g	0.42	ND	U	g
Methylene Chloride	0.0009		0.36	0.37		a	0.36	0.33	B J	a
Acetone	0.0039		1.6	0.76	J		1.6	1.2	B J	a
Carbon Disulfide	0.0005		0.22	ND	U	g	0.22	ND	U	g
1,1-Dichloroethene	0.0012		0.48	ND	U	g	0.48	ND	U	g
1,1-Dichloroethane	0.0004		0.15	ND	U	g	0.15	ND	U	g
trans-1,2-Dichloroethene	0.0009		0.37	ND	U	g	0.36	ND	U	g
cis-1,2-Dichloroethene	0.0011		0.47	ND	U	g	0.47	ND	U	g
Chloroform	0.0005		0.19	ND	U	k	0.19	ND	U	k
1,2-Dichloroethane	0.0005		0.21	ND	U	g	0.21	ND	U	g
Methyl Ethyl Ketone (2-butanone)	0.0025		1.0	0.42	J		1.0	0.46	J	
1,1,1-Trichloroethane	0.0004		0.18	ND	U	g	0.18	ND	U	g
Carbon Tetrachloride	0.0010		0.41	ND	U	g	0.40	ND	U	g
Vinyl Acetate	0.0016		0.67	ND	U	g	0.67	ND	U	g
Bromodichloromethane	0.0006		0.27	ND	U	g	0.27	ND	U	g
1,2-Dichloropropane	0.0008		0.35	ND	U	g	0.35	ND	U	g
cis-1,3-Dichloropropene	0.0007		0.29	ND	U	g	0.29	ND	U	g
Trichloroethene (tce)	0.0005		0.22	ND	U	g	0.22	ND	U	g
Dibromochloromethane	0.0003		0.14	ND	U	g	0.14	ND	U	g
1,1,2-Trichloroethane	0.0007		0.29	ND	U	g	0.29	ND	U	g
Benzene	0.0005		0.20	ND	U	g	0.19	ND	U	g

Base: Kotzebue LRRS						Table 6.2.1.3								
Site: SS12						Analytical Data Summary								
Extraction Method: EPA Method 5030						EPA Method 8260								
Analytical Method: EPA Method 8260														
Matrix: Soil														
Units: mg/kg														
			Environmental Samples											
		Field ID:		SS12-SB7-1.5				SS12-SB9-2.0						
		Batch ID:		H607				H607						
Parameters	MDL		PQL	Result	Validity	Comments	PQL	Result	Validity	Comments				
trans-1,3-Dichloropropene	0.0005		0.22	ND	U	g	0.22	ND	U	g				
2-Chloroethyl Vinyl Ether	0.0006		0.27	ND	U	g	0.26	ND	U	g				
Bromoform	0.0013		0.52	ND	U	g	0.52	ND	U	g				
Methyl Isobutyl Ketone	0.0015		0.62	ND	U	g	0.62	ND	U	g				
2-Hexanone	0.0027		1.1	ND	U	g	1.1	ND	U	g				
Tetrachloroethene (pce)	0.0009		0.37	ND	U	g	0.37	ND	U	g				
1,1,2,2-Tetrachloroethane	0.0009		0.38	ND	U	g	0.38	ND	U	g				
Toluene	0.0009		0.38	0.21	J	k	0.38	ND	U	k				
Chlorobenzene	0.0007		0.30	0.098	J		0.30	ND	U	g				
Ethylbenzene	0.0004		0.18	0.23		g	0.18	ND	U	g				
Styrene	0.0006		0.27	ND	U	g	0.26	ND	U	g				
1,1,2-Trichloro-1,2,2-trifluoroethane	0.0007		0.31	ND	U	g	0.31	ND	U	g				
Xylenes, total	0.0020		0.83	18		g	0.83	ND	U	g				
1,1,1,2-Tetrachloroethane	0.0010		0.42	ND	U	g	0.41	ND	U	g				
1,2,3-Trichloropropane	0.0023		0.94	ND	U	g	0.93	ND	U	g				
Bromochloromethane	0.0007		0.28	ND	U	g	0.28	ND	U	g				
1-Chlorohexane	0.0007		0.27	ND	U	g	0.27	ND	U	g				
Bromobenzene	0.0007		0.30	ND	U	g	0.30	ND	U	g				

Base: Kotzebue LRRS
Site: SS12
Extraction Method: EPA Method 5030
Analytical Method: EPA Method 8260
Matrix: Soil
Units: mg/kg

Table 6.2.1.3
Analytical Data Summary
EPA Method 8260

			Environmental Samples											
		Field ID:		SS12-SB16-1.5				SS12-SB20-1.0			SS12-SB20-1.0RE			
		Batch ID:		H615				H615				H615		
Parameters	MDL		PQL	Result	Validity	Comments	PQL	Result	Validity	Comments	PQL	Result	Validity	Comments
Chloromethane	0.0009		0.50	ND	U	g	0.009	ND	UJ	b	0.009	ND	UJ	b
Bromomethane	0.0008		0.47	ND	U	g	0.009	ND	UJ	b	0.009	ND	UJ	b
Vinyl Chloride	0.0010		0.54	ND	U	g	0.010	ND	UJ	b	0.010	ND	UJ	b
Chloroethane	0.0010		0.58	ND	U	g	0.011	ND	UJ	b	0.011	ND	UJ	b
Methylene Chloride	0.0009		0.49	0.26	B J	a	0.009	0.011	J	a	0.009	0.009	B J	a,b
Acetone	0.0039		2.2	1.3	B J	a	0.04	0.40	J	b	0.04	0.10	J	b
Carbon Disulfide	0.0005		0.31	ND	U	g	0.006	ND	UJ	b	0.006	ND	UJ	b
1,1-Dichloroethene	0.0012		0.66	ND	U	g	0.012	ND	UJ	b	0.012	ND	UJ	b
1,1-Dichloroethane	0.0004		0.21	ND	U	g	0.004	ND	UJ	b	0.004	ND	UJ	b
trans-1,2-Dichloroethene	0.0009		0.50	ND	U	g	0.009	ND	UJ	b	0.009	ND	UJ	b
cis-1,2-Dichloroethene	0.0011		0.65	ND	U	g	0.012	ND	UJ	b	0.012	ND	UJ	b
Chloroform	0.0005		0.26	ND	U	g	0.005	ND	UJ	b	0.005	ND	UJ	b
1,2-Dichloroethane	0.0005		0.29	ND	U	g	0.005	ND	UJ	b	0.005	ND	UJ	b
Methyl Ethyl Ketone (2-butanone)	0.0025		1.4	0.51	J		0.027	0.14	J	b	0.026	0.035	J	b
1,1,1-Trichloroethane	0.0004		0.25	ND	U	g	0.005	ND	UJ	b	0.004	ND	UJ	b
Carbon Tetrachloride	0.0010		0.56	ND	U	g	0.011	ND	UJ	b	0.010	ND	UJ	b
Vinyl Acetate	0.0016		0.92	ND	U	g	0.017	ND	UJ	b	0.017	ND	UJ	b
Bromodichloromethane	0.0006		0.37	ND	U	g	0.007	ND	UJ	b	0.007	ND	UJ	b
1,2-Dichloropropane	0.0008		0.48	ND	U	g	0.009	ND	UJ	b	0.009	ND	UJ	b
cis-1,3-Dichloropropene	0.0007		0.39	ND	U	g	0.007	ND	UJ	b	0.007	ND	UJ	b
Trichloroethene (tce)	0.0005		0.31	ND	U	g	0.006	ND	UJ	b	0.006	ND	UJ	b
Dibromochloromethane	0.0003		0.19	ND	U	g	0.004	ND	UJ	b	0.004	ND	UJ	b
1,1,2-Trichloroethane	0.0007		0.39	ND	U	g	0.007	ND	UJ	b	0.007	ND	UJ	b
Benzene	0.0005		0.27	ND	U	g	0.0051	ND	UJ	b	0.0049	ND	UJ	b

Base: Kotzebue LRRS
Site: SS12
Extraction Method: EPA Method 5030
Analytical Method: EPA Method 8260
Matrix: Soil
Units: mg/kg

Table 6.2.1.3
Analytical Data Summary
EPA Method 8260

			Environmental Samples											
		Field ID:		SS12-SB16-1.5				SS12-SB20-1.0			SS12-SB20-1.0RE			
		Batch ID:		H615				H615				H615		
Parameters	MDL		PQL	Result	Validity	Comments	PQL	Result	Validity	Comments	PQL	Result	Validity	Comments
trans-1,3-Dichloropropene	0.0005		0.30	ND	U	g	0.006	ND	UJ	b	0.006	ND	UJ	b
2-Chloroethyl Vinyl Ether	0.0006		0.37	ND	U	g	0.007	ND	UJ	b	0.007	ND	UJ	b
Bromoform	0.0013		0.72	ND	U	g	0.014	ND	UJ	b	0.013	ND	UJ	b
Methyl Isobutyl Ketone	0.0015		0.86	ND	U	g	0.016	ND	UJ	b	0.016	ND	UJ	b
2-Hexanone	0.0027		1.6	ND	U	g	0.029	ND	UJ	b	0.028	ND	UJ	b
Tetrachloroethene (pce)	0.0009		0.51	ND	U	g	0.010	ND	UJ	b	0.009	ND	UJ	b
1,1,2,2-Tetrachloroethane	0.0009		0.52	ND	U	g	0.0098	ND	UJ	b	0.0095	ND	UJ	b
Toluene	0.0009		0.52	ND	U	g	0.0098	0.094	J	b	0.0095	0.028	J	b
Chlorobenzene	0.0007		0.41	ND	U	g	0.008	ND	UJ	b	0.007	ND	UJ	b
Ethylbenzene	0.0004		0.25	ND	U	g	0.0046	0.0092	J	b	0.0045	0.003	J	b
Styrene	0.0006		0.37	ND	U	g	0.007	ND	UJ	b	0.007	ND	UJ	b
1,1,2-Trichloro-1,2,2-trifluoroethane	0.0007		0.42	ND	U	g	0.008	ND	UJ	b	0.008	ND	UJ	b
Xylenes, total	0.0020		1.1	ND	U	g	0.022	0.037	J	b	0.021	0.028	J	b
1,1,1,2-Tetrachloroethane	0.0010		0.57	ND	U	g	0.011	ND	UJ	b	0.010	ND	UJ	b
1,2,3-Trichloropropane	0.0023		1.3	ND	U	g	0.024	ND	UJ	b	0.023	ND	UJ	b
Bromochloromethane	0.0007		0.38	ND	U	g	0.007	ND	UJ	b	0.007	ND	UJ	b
1-Chlorohexane	0.0007		0.38	ND	U	g	0.007	ND	UJ	b	0.007	ND	UJ	b
Bromobenzene	0.0007		0.42	ND	U	g	0.015	ND*	UJ	b	0.0076	ND	UJ	b

Base: Kotzebue LRRS						Table 6.2.1.3								
Site: SS12						Analytical Data Summary								
Extraction Method: EPA Method 5030						EPA Method 8260								
Analytical Method: EPA Method 8260														
Matrix: Soil														
Units: mg/kg														
			Environmental Samples											
		Field ID:		SS12-SB23-0.5										
		Batch ID:		H615										
Parameters	MDL		PQL	Result	Validity	Comments								
Chloromethane	0.0009		0.005	ND	U	g								
Bromomethane	0.0008		0.005	ND	U	g								
Vinyl Chloride	0.0010		0.006	ND	U	g								
Chloroethane	0.0010		0.006	ND	U	g								
Methylene Chloride	0.0009		0.005	0.003	B J	a								
Acetone	0.0039		0.02	0.02	J									
Carbon Disulfide	0.0005		0.003	ND	U	g								
1,1-Dichloroethene	0.0012		0.007	ND	U	g								
1,1-Dichloroethane	0.0004		0.002	ND	U	g								
trans-1,2-Dichloroethene	0.0009		0.005	ND	U	g								
cis-1,2-Dichloroethene	0.0011		0.007	ND	U	g								
Chloroform	0.0005		0.003	ND	U	g								
1,2-Dichloroethane	0.0005		0.003	ND	U	g								
Methyl Ethyl Ketone (2-butanone)	0.0025		0.015	ND	U	g								
1,1,1-Trichloroethane	0.0004		0.003	ND	U	g								
Carbon Tetrachloride	0.0010		0.006	ND	U	g								
Vinyl Acetate	0.0016		0.010	ND	U	g								
Bromodichloromethane	0.0006		0.004	ND	U	g								
1,2-Dichloropropane	0.0008		0.005	ND	U	g								
cis-1,3-Dichloropropene	0.0007		0.004	ND	U	g								
Trichloroethene (tce)	0.0005		0.003	ND	U	g								
Dibromochloromethane	0.0003		0.002	ND	U	g								
1,1,2-Trichloroethane	0.0007		0.004	ND	U	g								
Benzene	0.0005		0.0028	ND	U	g								

Base: Kotzebue LRRS						Table 6.2.1.3							
Site: SS12						Analytical Data Summary							
Extraction Method: EPA Method 5030						EPA Method 8260							
Analytical Method: EPA Method 8260													
Matrix: Soil													
Units: mg/kg													
			Environmental Samples										
		Field ID:		SS12-SB23-0.5									
		Batch ID:		H615									
Parameters	MDL		PQL	Result	Validity	Comments							
trans-1,3-Dichloropropene	0.0005		0.003	ND	U	g							
2-Chloroethyl Vinyl Ether	0.0006		0.004	ND	U	g							
Bromoform	0.0013		0.007	ND	U	g							
Methyl Isobutyl Ketone	0.0015		0.009	ND	U	g							
2-Hexanone	0.0027		0.016	ND	U	g							
Tetrachloroethene (pce)	0.0009		0.005	ND	U	g							
1,1,2,2-Tetrachloroethane	0.0009		0.0054	ND	U	g							
Toluene	0.0009		0.0054	0.0053	J								
Chlorobenzene	0.0007		0.004	ND	U	g							
Ethylbenzene	0.0004		0.0025	ND	U	g							
Styrene	0.0006		0.004	ND	U	g							
1,1,2-Trichloro-1,2,2-trifluoroethane	0.0007		0.004	ND	U	g							
Xylenes, total	0.0020		0.012	ND	U	g							
1,1,1,2-Tetrachloroethane	0.0010		0.006	ND	U	g							
1,2,3-Trichloropropane	0.0023		0.013	ND	U	g							
Bromochloromethane	0.0007		0.004	ND	U	g							
1-Chlorohexane	0.0007		0.004	ND	U	g							
Bromobenzene	0.0007		0.0043	ND	U	g							

Base: Kotzebue LRRS						Table 6.2.1.3								
Site: SS12						Analytical Data Summary								
Extraction Method: EPA Method 5030						EPA Method 8260								
Analytical Method: EPA Method 8260														
Matrix: Soil														
Units: mg/kg														
			Environmental Samples											
		Field ID:		SS12-SD4										
		Batch ID:		H746										
Parameters	MDL		PQL	Result	Validity	Comments								
Chloromethane	0.0009		0.004	ND	U	g								
Bromomethane	0.0008		0.004	ND	U	g								
Vinyl Chloride	0.0010		0.005	ND	U	g								
Chloroethane	0.0010		0.005	ND	U	g								
Methylene Chloride	0.0009		0.004	0.005	B	a,k								
Acetone	0.0039		0.02	ND	U	a								
Carbon Disulfide	0.0005		0.003	ND	U	g								
1,1-Dichloroethene	0.0012		0.006	ND	U	g								
1,1-Dichloroethane	0.0004		0.002	ND	U	g								
trans-1,2-Dichloroethene	0.0009		0.004	ND	U	g								
cis-1,2-Dichloroethene	0.0011		0.005	ND	U	g								
Chloroform	0.0005		0.002	ND	U	g								
1,2-Dichloroethane	0.0005		0.002	ND	U	g								
Methyl Ethyl Ketone (2-butanone)	0.0025		0.012	ND	U	g								
1,1,1-Trichloroethane	0.0004		0.002	ND	U	g								
Carbon Tetrachloride	0.0010		0.005	ND	U	g								
Vinyl Acetate	0.0016		0.008	ND	U	g								
Bromodichloromethane	0.0006		0.003	ND	U	g								
1,2-Dichloropropane	0.0008		0.004	ND	U	g								
cis-1,3-Dichloropropene	0.0007		0.003	ND	U	g								
Trichloroethene (tce)	0.0005		0.003	ND	U	g								
Dibromochloromethane	0.0003		0.002	ND	U	g								
1,1,2-Trichloroethane	0.0007		0.003	ND	U	g								
Benzene	0.0005		0.0022	ND	U	g								

Base: Kotzebue LRRS						Table 6.2.1.3							
Site: SS12						Analytical Data Summary							
Extraction Method: EPA Method 5030						EPA Method 8260							
Analytical Method: EPA Method 8260													
Matrix: Soil													
Units: mg/kg													
			Environmental Samples										
		Field ID:		SS12-SD4									
		Batch ID:		H746									
Parameters	MDL		PQL	Result	Validity	Comments							
trans-1,3-Dichloropropene	0.0005		0.003	ND	U	g							
2-Chloroethyl Vinyl Ether	0.0006		0.003	ND	U	g							
Bromoform	0.0013		0.006	ND	U	g							
Methyl Isobutyl Ketone	0.0015		0.007	ND	U	g							
2-Hexanone	0.0027		0.013	ND	U	g							
Tetrachloroethene (pce)	0.0009		0.004	ND	U	g							
1,1,2,2-Tetrachloroethane	0.0009		0.0044	ND	U	g							
Toluene	0.0009		0.0044	ND	U	g							
Chlorobenzene	0.0007		0.003	ND	U	g							
Ethylbenzene	0.0004		0.0021	ND	U	g							
Styrene	0.0006		0.003	ND	U	g							
1,1,2-Trichloro-1,2,2-trifluoroethane	0.0007		0.004	ND	U	g							
Xylenes, total	0.0020		0.010	ND	U	g							
1,1,1,2-Tetrachloroethane	0.0010		0.005	ND	U	g							
1,2,3-Trichloropropane	0.0023		0.011	ND	U	g							
Bromochloromethane	0.0007		0.003	ND	U	g							
1-Chlorohexane	0.0007		0.003	ND	U	g							
Bromobenzene	0.0007		0.0035	ND	U	g							

Base: Kotzebue LRRS
Site: SS12
Extraction Method: EPA Method 5030
Analytical Method: EPA Method 8260
Matrix: Soil
Units: mg/kg

Table 6.2.1.3
Analytical Data Summary
EPA Method 8260

			Environmental Samples							
		Field ID:		SS12-SB27-7.5				SS12-SB27-7.5RE		
		Batch ID:		H753				H753		
Parameters	MDL		PQL	Result	Validity	Comments	PQL	Result	Validity	Comments
Chloromethane	0.0009		0.76	ND	UJ	b	16	ND	U	g
Bromomethane	0.0008		0.71	ND	UJ	b	15	ND	U	g
Vinyl Chloride	0.0010		0.82	ND	UJ	b	17	ND	U	g
Chloroethane	0.0010		0.88	ND	UJ	b	18	ND	U	g
Methylene Chloride	0.0009		0.75	0.60	B J	a,b	15	7.6	J	a
Acetone	0.0039		3.4	1.2	B J	a,b	71	ND	U	a
Carbon Disulfide	0.0005		0.47	ND	UJ	b	9.7	ND	U	g
1,1-Dichloroethene	0.0012		1.0	ND	UJ	b	21	ND	U	g
1,1-Dichloroethane	0.0004		0.31	ND	UJ	b	6.5	ND	U	g
trans-1,2-Dichloroethene	0.0009		0.76	ND	UJ	b	16	ND	U	g
cis-1,2-Dichloroethene	0.0011		0.99	ND	UJ	b	21	ND	U	g
Chloroform	0.0005		0.40	ND	UJ	b	8.3	ND	U	g
1,2-Dichloroethane	0.0005		0.43	ND	UJ	b	9.0	ND	U	g
Methyl Ethyl Ketone (2-butanone)	0.0025		7.7	ND	UJ	b	44	ND	U	g
1,1,1-Trichloroethane	0.0004		0.37	ND	UJ	b	7.7	ND	U	g
Carbon Tetrachloride	0.0010		0.85	ND	UJ	b	18	ND	U	g
Vinyl Acetate	0.0016		1.4	ND	UJ	b	29	ND	U	g
Bromodichloromethane	0.0006		0.56	ND	UJ	b	12	ND	U	g
1,2-Dichloropropane	0.0008		0.73	ND	UJ	b	15	ND	U	g
cis-1,3-Dichloropropene	0.0007		0.60	ND	UJ	b	12	ND	U	g
Trichloroethene (tce)	0.0005		0.47	1.0	J	b	9.7	ND	U	g
Dibromochloromethane	0.0003		0.29	ND	UJ	b	6.1	ND	U	g
1,1,2-Trichloroethane	0.0007		0.60	ND	UJ	b	12	ND	U	g
Benzene	0.0005		0.41	1.6	J	b	8.5	ND	U	g

Base: Kotzebue LRRS
Site: SS12
Extraction Method: EPA Method 5030
Analytical Method: EPA Method 8260
Matrix: Soil
Units: mg/kg

Table 6.2.1.3
Analytical Data Summary
EPA Method 8260

			Environmental Samples							
		Field ID:		SS12-SB27-7.5				SS12-SB27-7.5DL		
		Batch ID:		H753				H753		
Parameters	MDL		PQL	Result	Validity	Comments	PQL	Result	Validity	Comments
trans-1,3-Dichloropropene	0.0005		0.46	ND	UJ	b	9.5	ND	U	g
2-Chloroethyl Vinyl Ether	0.0006		0.56	ND	UJ	b	12	ND	U	g
Bromoform	0.0013		1.1	ND	UJ	b	23	ND	U	g
Methyl Isobutyl Ketone	0.0015		1.3	ND	UJ	b	27	ND	U	g
2-Hexanone	0.0027		2.8	ND	UJ	b	49	ND	U	g
Tetrachloroethene (pce)	0.0009		0.78	ND	UJ	b	16	ND	U	g
1,1,2,2-Tetrachloroethane	0.0009		0.79	ND	UJ	b	16	ND	U	g
Toluene	0.0009		0.79	52	J	b	16	26		g
Chlorobenzene	0.0007		0.62	ND	UJ	b	13	ND	U	g
Ethylbenzene	0.0004		0.37	23	J	b	7.7	22	J	g
Styrene	0.0006		0.56	ND	UJ	b	12	ND	U	g
1,1,2-Trichloro-1,2,2-trifluoroethane	0.0007		0.64	ND	UJ	b	13	ND	U	g
Xylenes, total	0.0020		1.7	490 E**	J	b,n	36	440		g
1,1,1,2-Tetrachloroethane	0.0010		0.87	ND	UJ	b	18	ND	U	g
1,2,3-Trichloropropane	0.0023		2.0	ND	UJ	b	41	ND	U	g
Bromochloromethane	0.0007		0.58	ND	UJ	b	12	ND	U	g
1-Chlorohexane	0.0007		0.57	ND	UJ	b	12	ND	U	g
Bromobenzene	0.0007		0.63	ND	UJ	b	13	ND	U	g

** Analyte detected above linear calibration range.

Base: Kotzebue LRRS
Site: SS12
Extraction Method: EPA Method 5030
Analytical Method: EPA Method 8260
Matrix: Soil
Units: mg/kg

Table 6.2.1.3
Analytical Data Summary
EPA Method 8260

			Environmental Samples							
		Field ID:		SS12-SD5-01				SS12-SD5-01RE		
		Batch ID:		H859				H859		
Parameters	MDL		PQL	Result	Validity	Comments	PQL	Result	Validity	Comments
Chloromethane	0.0009		0.005	ND	UJ	n	0.005	ND	UJ	n
Bromomethane	0.0008		0.005	ND	UJ	n	0.005	ND	UJ	n
Vinyl Chloride	0.0010		0.006	ND	UJ	n	0.006	ND	UJ	n
Chloroethane	0.0010		0.006	ND	UJ	n	0.006	ND	UJ	n
Methylene Chloride	0.0009		0.005	0.009	B J	a,n	0.005	0.009	B J	a,n
Acetone	0.0039		0.02	0.05	B J	a,n	0.02	0.06	B J	a,n
Carbon Disulfide	0.0005		0.003	ND	UJ	n	0.003	ND	UJ	n
1,1-Dichloroethene	0.0012		0.007	ND	UJ	n	0.007	ND	UJ	n
1,1-Dichloroethane	0.0004		0.002	ND	UJ	n	0.002	ND	UJ	n
trans-1,2-Dichloroethene	0.0009		0.005	ND	UJ	n	0.005	ND	UJ	n
cis-1,2-Dichloroethene	0.0011		0.007	ND	UJ	n	0.007	ND	UJ	n
Chloroform	0.0005		0.003	ND	UJ	n	0.003	ND	UJ	n
1,2-Dichloroethane	0.0005		0.003	ND	UJ	n	0.003	ND	UJ	n
Methyl Ethyl Ketone (2-butanone)	0.0025		0.014	0.011	B J	a,n	0.015	0.008	J	n
1,1,1-Trichloroethane	0.0004		0.002	ND	UJ	n	0.003	ND	UJ	n
Carbon Tetrachloride	0.0010		0.006	ND	UJ	n	0.006	ND	UJ	n
Vinyl Acetate	0.0016		0.009	ND	UJ	n	0.010	ND	UJ	n
Bromodichloromethane	0.0006		0.004	ND	UJ	n	0.004	ND	UJ	n
1,2-Dichloropropane	0.0008		0.005	ND	UJ	n	0.005	ND	UJ	n
cis-1,3-Dichloropropene	0.0007		0.004	ND	UJ	n	0.004	ND	UJ	n
Trichloroethene (tce)	0.0005		0.003	ND	UJ	n	0.003	ND	UJ	n
Dibromochloromethane	0.0003		0.002	ND	UJ	n	0.002	ND	UJ	n
1,1,2-Trichloroethane	0.0007		0.004	ND	UJ	n	0.004	ND	UJ	n
Benzene	0.0005		0.0027	ND	UJ	n	0.0028	ND	UJ	n

Base: Kotzebue LRRS						Table 6.2.1.3								
Site: SS12						Analytical Data Summary								
Extraction Method: EPA Method 5030						EPA Method 8260								
Analytical Method: EPA Method 8260														
Matrix: Soil														
Units: mg/kg														
			Environmental Samples											
		Field ID:		SS12-SD5-01				SS12-SD5-01RE						
		Batch ID:		H859				H859						
Parameters	MDL		PQL	Result	Validity	Comments	PQL	Result	Validity	Comments				
trans-1,3-Dichloropropene	0.0005		0.003	ND	UJ	n	0.003	ND	UJ	n				
2-Chloroethyl Vinyl Ether	0.0006		0.004	ND	UJ	n	0.004	ND	UJ	n				
Bromoform	0.0013		0.007	ND	UJ	n	0.007	ND	UJ	n				
Methyl Isobutyl Ketone	0.0015		0.009	ND	UJ	n	0.009	ND	UJ	n				
2-Hexanone	0.0027		0.016	ND	UJ	n	0.016	ND	UJ	n				
Tetrachloroethene (pce)	0.0009		0.005	ND	UJ	n	0.005	ND	UJ	n				
1,1,2,2-Tetrachloroethane	0.0009		0.0053	ND	UJ	n	0.0054	ND	UJ	n				
Toluene	0.0009		0.0053	ND	UJ	n	0.0054	ND	UJ	n				
Chlorobenzene	0.0007		0.004	ND	UJ	n	0.004	ND	UJ	n				
Ethylbenzene	0.0004		0.0025	ND	UJ	n	0.0025	ND	UJ	n				
Styrene	0.0006		0.004	ND	UJ	n	0.004	ND	UJ	n				
1,1,2-Trichloro-1,2,2-trifluoroethane	0.0007		0.004	ND	UJ	a,n	0.004	ND	UJ	n				
Xylenes, total	0.0020		0.012	ND	UJ	n	0.012	ND	UJ	n				
1,1,1,2-Tetrachloroethane	0.0010		0.006	ND	UJ	n	0.006	ND	UJ	n				
1,2,3-Trichloropropane	0.0023		0.013	ND	UJ	n	0.013	ND	UJ	n				
Bromochloromethane	0.0007		0.004	ND	UJ	n	0.004	ND	UJ	n				
1-Chlorohexane	0.0007		0.004	ND	UJ	n	0.004	ND	UJ	n				
	0.0007		0.0042	ND	UJ	n	0.0043	ND	UJ	n				

Base: Kotzebue LRRS
Site: SS12
Extraction Method: EPA Method 3550
Analytical Method: EPA Method 8270
Matrix: Soil
Units: mg/kg

Table 6.2.1.4
Analytical Data Summary
EPA Method 8270

Environmental Samples

		Field ID:		SS12-SB1-1.5					SS12-SB10-2.0				SS12-SB11-3.0ms			
		Batch ID:		H607					H607					H607		
Parameters	MDL		PQL	Result	Validity	Comments	PQL	Result	Validity	Comments	PQL	Result	Validity	Comments
Phenol	0.05		1.9	ND	U	g	0.2	ND	U	g	0.2	ND	U	g
bis(2-Chloroethyl) Ether	0.04		1.4	ND	U	g	0.1	ND	U	g	0.1	ND	U	g
2-Chlorophenol	0.07		2.5	ND	U	g	0.2	ND	U	g	0.2	ND	U	g
1,3-Dichlorobenzene	0.04		1.3	ND	U	k	0.1	ND	U	k	0.1	ND	U	k
1,4-Dichlorobenzene	0.03		0.9	ND	U	g	0.1	ND	U	g	0.1	ND	U	g
Benzyl Alcohol	0.05		1.8	ND	U	g	0.2	ND	U	g	0.2	ND	U	g
1,2-Dichlorobenzene	0.04		1.3	ND	U	g	0.1	ND	U	g	0.1	ND	U	g
2-Methylphenol	0.10		3.4	ND	U	g	0.3	ND	U	g	0.3	ND	U	g
2,2'-Oxybis (1-Chloropropane)	0.03		1.1	ND	U	g	0.1	ND	U	g	0.1	ND	U	g
4-Methylphenol	0.08		2.7	ND	U	g	0.3	ND	U	g	0.3	ND	U	g
N-Nitrosodi-n-propylamine	0.03		0.9	ND	U	g	0.1	ND	U	g	0.1	ND	U	g
Hexachloroethane	0.04		1.4	ND	U	g	0.1	ND	U	g	0.1	ND	U	g
Nitrobenzene	0.02		2.5	ND	U	g	0.2	ND	U	g	0.1	ND	U	g
Isophorone	0.03		15	ND	U	g	0.1	ND	U	g	0.1	ND	U	g
2-Nitrophenol	0.03		6.6	ND	U	g	0.3	ND	U	g	0.1	ND	U	g
2,4-Dimethylphenol	0.17		9.9	ND	U	g	0.3	ND	U	g	0.3	ND	U	g
Benzoic Acid	0.06		2.0	ND	U	g	0.31	ND	U	g	0.19	ND	U	g
bis(2-Chloroethoxy) Methane	0.04		6.5	ND	U	g	0.2	ND	U	g	0.1	ND	U	g
2,4-Dichlorophenol	0.04		2.0	ND	U	g	0.2	ND	U	g	0.1	ND	U	g
1,2,4-Trichlorobenzene	0.03		1.2	ND	U	g	0.1	ND	U	g	0.1	ND	U	g
Naphthalene	0.04		1.2	4.0		g	0.1	ND	U	g	0.1	ND	U	g
4-Chloroaniline	0.10		3.6	ND	U	g	0.4	ND	U	g	0.3	ND	U	g
Hexachlorobutadiene	0.03		1.2	ND	U	g	0.1	ND	U	g	0.1	ND	U	g
4-Chloro-3-Methylphenol	0.06		2.0	ND	U	g	0.2	ND	U	g	0.2	ND	U	g
2-Methylnaphthalene	0.03		1.2	9.6		g	0.1	ND	U	g	0.1	ND	U	g
Hexachlorocyclopentadiene	0.03		0.9	ND	U	g	0.1	ND	U	g	0.1	ND	U	g
2,4,6-Trichlorophenol	0.04		1.5	ND	U	g	0.1	ND	U	g	0.1	ND	U	g
2,4,5-Trichlorophenol	0.03		0.88	ND	U	g	0.09	ND	U	g	0.09	ND	U	g
2-Chloronaphthalene	0.03		1.2	ND	U	g	0.1	ND	U	g	0.1	ND	U	g
2-Nitroaniline	0.02		5.0	ND	U	g	0.41	ND	U	g	0.06	ND	U	g
Dimethyl Phthalate	0.04		1.2	ND	U	g	0.1	ND	U	g	0.1	ND	U	g
Acenaphthylene	0.04		1.4	ND	U	g	0.1	ND	U	g	0.1	ND	U	g
3-Nitroaniline	0.11		3.9	ND	U	g	0.38	ND	U	g	0.37	ND	U	g
Acenaphthene	0.03		1.1	0.7	J		0.1	ND	U	g	0.1	ND	U	g
2,4-Dinitrophenol	0.09		3.1	ND	U	g	0.31	ND	U	g	0.30	ND	U	g
4-Nitrophenol	0.07		10	ND	U	g	1.2	ND	U	g	0.22	ND	U	g
Dibenzofuran	0.03		1.1	ND	U	g	0.1	ND	U	g	0.1	ND	U	g
2,6-Dinitrotoluene	0.04		2.9	ND	U	g	0.2	ND	U	g	0.1	ND	U	g

Base: Kotzebue LRRS						Table 6.2.1.4								
Site: SS12						Analytical Data Summary								
Extraction Method: EPA Method 3550						EPA Method 8270								
Analytical Method: EPA Method 8270														
Matrix: Soil														
Units: mg/kg														
			Environmental Samples											
		Field ID:		SS12-SB1-1.5				SS12-SB10-2.0				SS12-SB11-3.0ms		
		Batch ID:		H607				H607				H607		
Parameters	MDL		PQL	Result	Validity	Comments	PQL	Result	Validity	Comments	PQL	Result	Validity	Comments
2,4-Dinitrotoluene	0.02		0.8	ND	U	g	0.1	ND	U	g	0.1	ND	U	g
Diethyl Phthalate	0.04		1.2	ND	U	g	0.1	ND	U	g	0.1	ND	U	g
4-Chlorophenyl Phenyl Ether	0.02		0.8	ND	U	g	0.1	ND	U	g	0.1	ND	U	g
Fluorene	0.03		1.1	1.1		g	0.1	ND	U	g	0.1	ND	U	g
4-Nitroaniline	0.13		4.6	ND	U	g	0.46	ND	U	g	0.45	ND	U	g
4,6-Dinitro-2-Methylphenol	0.09		3.1	ND	U	g	0.31	ND	U	g	0.30	ND	U	g
N-Nitrosodiphenylamine	0.08		2.9	ND	U	g	0.3	ND	U	g	0.3	ND	U	g
4-Bromophenyl Phenyl Ether	0.02		0.8	ND	U	g	0.1	ND	U	g	0.1	ND	U	g
Hexachlorobenzene	0.03		1.1	ND	U	g	0.1	ND	U	g	0.1	ND	U	g
Pentachlorophenol	0.03		1.1	ND	U	g	0.11	ND	U	g	0.11	ND	U	g
Phenanthrene	0.03		1.1	0.4	J		0.1	ND	U	g	0.1	ND	U	g
Anthracene	0.04		1.5	ND	U	g	0.2	ND	U	g	0.1	ND	U	g
di-n-butyl Phthalate	0.06		2.2	ND	U	g	0.2	ND	U	g	0.2	ND	U	g
Fluroanthene	0.03		1.2	ND	U	g	0.1	0.1	J	g	0.1	ND	U	g
Pyrene	0.03		1.0	ND	U	g	0.1	0.1		g	0.1	ND	U	g
Butylbenzylphthalate	0.02		0.8	ND	U	g	0.1	ND	U	g	0.1	ND	U	g
3,3'-Dichlorobenzidine	0.06		2.0	ND	U	g	0.2	ND	U	g	0.2	ND	U	g
Benzo(a)anthracene	0.04		1.4	ND	U	g	0.1	ND	U	g	0.1	ND	U	g
bis(2-Ethylhexyl) Phthalate	0.04		1.4	ND	U	g	0.1	ND	U	g	0.1	ND	U	g
Chrysene	0.05		1.6	ND	U	g	0.2	ND	U	g	0.2	ND	U	g
di-n-Octylphthalate	0.02		0.8	ND	U	g	0.1	ND	U	g	0.1	ND	U	g
Benzo(b)fluoranthene	0.04		1.5	ND	U	g	0.1	ND	U	g	0.1	ND	U	g
Benzo(k)fluoranthene	0.07		2.6	ND	U	g	0.3	ND	U	g	0.3	ND	U	g
Benzo(a)pyrene	0.04		1.4	ND	U	g	0.1	ND	U	g	0.1	ND	U	g
Indeno(1,2,3-c,d)pyrene	0.03		0.9	ND	U	g	0.1	ND	U	g	0.1	ND	U	g
Dibenzo(a,h)anthracene	0.02		0.8	ND	U	g	0.1	ND	U	g	0.1	ND	U	g
Benzo(g,h,i)perylene	0.03		1.1	ND	U	g	0.1	ND	U	g	0.1	ND	U	g

Base: Kotzebue LRRS
Site: SS12
Extraction Method: EPA Method 3550
Analytical Method: EPA Method 8270
Matrix: Soil
Units: mg/kg

Table 6.2.1.4
Analytical Data Summary
EPA Method 8270

			Environmental Samples											
		Field ID:		SS12-SB12-2.0				SS12-SB2-2.5				SS12-SB4-2.0		
		Batch ID:		H607				H607				H607		
Parameters	MDL		PQL	Result	Validity	Comments	PQL	Result	Validity	Comments	PQL	Result	Validity	Comments
Phenol	0.05		0.2	ND	U	g	0.2	ND	U	g	1.9	ND	U	g
bis(2-Chloroethyl) Ether	0.04		0.1	ND	U	g	0.1	ND	U	g	1.3	ND	U	g
2-Chlorophenol	0.07		0.2	ND	U	g	0.2	ND	U	g	2.5	ND	U	g
1,3-Dichlorobenzene	0.04		0.1	ND	U	k	0.1	ND	U	k	1.3	ND	U	k
1,4-Dichlorobenzene	0.03		0.1	ND	U	g	0.1	ND	U	g	0.9	ND	U	g
Benzyl Alcohol	0.05		0.2	ND	U	g	0.2	ND	U	g	1.8	ND	U	g
1,2-Dichlorobenzene	0.04		0.1	ND	U	g	0.1	ND	U	g	1.3	ND	U	g
2-Methylphenol	0.10		0.3	ND	U	g	0.3	ND	U	g	3.4	ND	U	g
2,2'-Oxybis (1-Chloropropane)	0.03		0.1	ND	U	g	0.1	ND	U	g	1.1	ND	U	g
4-Methylphenol	0.08		0.2	ND	U	g	0.3	ND	U	g	2.6	ND	U	g
N-Nitrosodi-n-propylamine	0.03		0.1	ND	U	g	0.1	ND	U	g	0.9	ND	U	g
Hexachloroethane	0.04		0.1	ND	U	g	0.1	ND	U	g	1.3	ND	U	g
Nitrobenzene	0.02		0.5	ND	U	g	0.1	ND	U	g	0.9	ND	U	g
Isophorone	0.03		0.1	ND	U	g	0.1	ND	U	g	1.1	ND	U	g
2-Nitrophenol	0.03		0.1	ND	U	g	0.1	ND	U	g	1.2	ND	U	g
2,4-Dimethylphenol	0.17		0.3	ND	U	g	0.3	ND	U	g	3.2	ND	U	g
Benzoic Acid	0.06		0.35	ND	U	g	0.19	ND	U	g	1.9	ND	U	g
bis(2-Chloroethoxy) Methane	0.04		0.1	ND	U	g	0.1	ND	U	g	1.2	ND	U	g
2,4-Dichlorophenol	0.04		0.1	ND	U	g	0.1	ND	U	g	1.5	ND	U	g
1,2,4-Trichlorobenzene	0.03		0.1	ND	U	g	0.1	ND	U	g	1.1	ND	U	g
Naphthalene	0.04		0.1	0.2		g	0.1	ND	U	g	1.2	ND	U	g
4-Chloroaniline	0.10		0.3	ND	U	g	0.3	ND	U	g	3.5	ND	U	g
Hexachlorobutadiene	0.03		0.1	ND	U	g	0.1	ND	U	g	1.2	ND	U	g
4-Chloro-3-Methylphenol	0.06		0.2	ND	U	g	0.2	ND	U	g	2.0	ND	U	g
2-Methylnaphthalene	0.03		0.1	1.4		g	0.1	ND	U	g	1.2	ND	U	g
Hexachlorocyclopentadiene	0.03		0.1	ND	U	g	0.1	ND	U	g	0.9	ND	U	g
2,4,6-Trichlorophenol	0.04		0.1	ND	U	g	0.1	ND	U	g	1.5	ND	U	g
2,4,5-Trichlorophenol	0.03		0.08	ND	U	g	0.08	ND	U	g	0.86	ND	U	g
2-Chloronaphthalene	0.03		0.1	ND	U	g	0.1	ND	U	g	1.1	ND	U	g
2-Nitroaniline	0.02		0.06	ND	U	g	0.06	ND	U	g	2.1	ND	U	g
Dimethyl Phthalate	0.04		0.1	ND	U	g	0.1	ND	U	g	1.2	ND	U	g
Acenaphthylene	0.04		0.1	ND	U	g	0.1	ND	U	g	1.4	ND	U	g
3-Nitroaniline	0.11		0.34	ND	U	g	0.37	ND	U	g	3.8	ND	U	g
Acenaphthene	0.03		0.1	ND	U	g	0.1	ND	U	g	1.0	ND	U	g
2,4-Dinitrophenol	0.09		0.27	ND	U	g	0.30	ND	U	g	3.1	ND	U	g
4-Nitrophenol	0.07		0.20	ND	U	g	0.22	ND	U	g	2.3	ND	U	g
Dibenzofuran	0.03		0.1	0.1		g	0.1	ND	U	g	1.1	ND	U	g
2,6-Dinitrotoluene	0.04		0.2	ND	U	g	0.1	ND	U	g	1.5	ND	U	g

Base: Kotzebue LRRS
Site: SS12
Extraction Method: EPA Method 3550
Analytical Method: EPA Method 8270
Matrix: Soil
Units: mg/kg

Table 6.2.1.4
Analytical Data Summary
EPA Method 8270

			Environmental Samples											
		Field ID:		SS12-SB12-2.0				SS12-SB2-2.5				SS12-SB4-2.0		
		Batch ID:		H607				H607				H607		
Parameters	MDL		PQL	Result	Validity	Comments	PQL	Result	Validity	Comments	PQL	Result	Validity	Comments
2,4-Dinitrotoluene	0.02		0.1	ND	U	g	0.1	ND	U	g	0.8	ND	U	g
Diethyl Phthalate	0.04		0.1	ND	U	g	0.1	ND	U	g	1.2	ND	U	g
4-Chlorophenyl Phenyl Ether	0.02		0.1	ND	U	g	0.1	ND	U	g	0.8	ND	U	g
Fluorene	0.03		0.1	0.1		g	0.1	ND	U	g	1.0	ND	U	g
4-Nitroaniline	0.13		0.41	ND	U	g	0.45	ND	U	g	4.6	ND	U	g
4,6-Dinitro-2-Methylphenol	0.09		0.27	ND	U	g	0.30	ND	U	g	3.1	ND	U	g
N-Nitrosodiphenylamine	0.08		0.3	ND	U	g	0.3	ND	U	g	2.9	ND	U	g
4-Bromophenyl Phenyl Ether	0.02		0.1	ND	U	g	0.1	ND	U	g	0.8	ND	U	g
Hexachlorobenzene	0.03		0.1	ND	U	g	0.1	ND	U	g	1.1	ND	U	g
Pentachlorophenol	0.03		0.10	ND	U	g	0.11	ND	U	g	1.1	ND	U	g
Phenanthrene	0.03		0.1	0.1	J		0.1	ND	U	g	1.1	ND	U	g
Anthracene	0.04		0.1	ND	U	g	0.1	ND	U	g	1.5	ND	U	g
di-n-butyl Phthalate	0.06		0.2	ND	U	g	0.2	ND	U	g	2.1	ND	U	g
Fluroanthene	0.03		0.1	ND	U	g	0.1	ND	U	g	1.2	ND	U	g
Pyrene	0.03		0.1	0.03	J		0.1	ND	U	g	1.0	ND	U	g
Butylbenzylphthalate	0.02		0.1	ND	U	g	0.1	ND	U	g	0.8	ND	U	g
3,3'-Dichlorobenzidine	0.06		0.2	ND	U	g	0.2	ND	U	g	2.0	ND	U	g
Benzo(a)anthracene	0.04		0.1	ND	U	g	0.1	ND	U	g	1.3	ND	U	g
bis(2-Ethylhexyl) Phthalate	0.04		0.1	ND	U	g	0.1	ND	U	g	1.4	ND	U	g
Chrysene	0.05		0.1	ND	U	g	0.2	ND	U	g	1.6	ND	U	g
di-n-Octylphthalate	0.02		0.1	ND	U	g	0.1	ND	U	g	0.8	ND	U	g
Benzo(b)fluoranthene	0.04		0.1	ND	U	g	0.1	ND	U	g	1.5	ND	U	g
Benzo(k)fluoranthene	0.07		0.2	ND	U	g	0.3	ND	U	g	2.6	ND	U	g
Benzo(a)pyrene	0.04		0.1	ND	U	g	0.1	ND	U	g	1.4	ND	U	g
Indeno(1,2,3-c,d)pyrene	0.03		0.1	ND	U	g	0.1	ND	U	g	0.9	ND	U	g
Dibenzo(a,h)anthracene	0.02		0.1	ND	U	g	0.1	ND	U	g	0.8	ND	U	g
Benzo(g,h,i)perylene	0.03		0.1	ND	U	g	0.1	ND	U	g	1.1	ND	U	g

Base: Kotzebue LRRS
Site: SS12
Extraction Method: EPA Method 3550
Analytical Method: EPA Method 8270
Matrix: Soil
Units: mg/kg

Table 6.2.1.4
Analytical Data Summary
EPA Method 8270

			Environmental Samples											
		Field ID:		SS12-SB7-1.5				SS12-SB7-1.5DL				SS12-SB9-2.0		
		Batch ID:		H607				H607				H607		
Parameters	MDL		PQL	Result	Validity	Comments	PQL	Result	Validity	Comments	PQL	Result	Validity	Comments
								Dilution 3						
Phenol	0.05		1.9	ND	U	g	5.7	ND	U	g	0.2	ND	U	g
bis(2-Chloroethyl) Ether	0.04		1.4	ND	U	g	4.1	ND	U	g	0.1	ND	U	g
2-Chlorophenol	0.07		2.5	ND	U	g	7.5	ND	U	g	0.3	ND	U	g
1,3-Dichlorobenzene	0.04		1.3	ND	U	k	4.0	ND	U	k	0.1	ND	U	k
1,4-Dichlorobenzene	0.03		0.9	ND	U	g	2.7	ND	U	g	0.1	ND	U	g
Benzyl Alcohol	0.05		1.8	ND	U	g	5.4	ND	U	g	0.2	ND	U	g
1,2-Dichlorobenzene	0.04		1.3	ND	U	g	4.0	ND	U	g	0.1	ND	U	g
2-Methylphenol	0.10		3.5	ND	U	g	10	ND	U	g	0.4	ND	U	g
2,2'-Oxybis (1-Chloropropane)	0.03		1.1	ND	U	g	3.4	ND	U	g	0.1	ND	U	g
4-Methylphenol	0.08		2.7	ND	U	g	8.1	ND	U	g	0.3	ND	U	g
N-Nitrosodi-n-propylamine	0.03		0.9	ND	U	g	2.8	ND	U	g	0.1	ND	U	g
Hexachloroethane	0.04		1.4	ND	U	g	4.1	ND	U	g	0.1	ND	U	g
Nitrobenzene	0.02		0.9	ND	U	g	2.6	ND	U	g	0.4	ND	U	g
Isophorone	0.03		18	ND	U	g	20	ND	U	g	1.6	ND	U	g
2-Nitrophenol	0.03		7.2	ND	U	g	7.5	ND	U	g	0.8	ND	U	g
2,4-Dimethylphenol	0.17		12	ND	U	g	9.9	ND	U	g	0.3	ND	U	g
Benzoic Acid	0.06		2.0	ND	U	g	6.0	ND	U	g	0.91	ND	U	g
bis(2-Chloroethoxy) Methane	0.04		5.2	ND	U	g	3.8	ND	U	g	0.1	ND	U	g
2,4-Dichlorophenol	0.04		2.7	ND	U	g	4.7	ND	U	g	0.2	ND	U	g
1,2,4-Trichlorobenzene	0.03		1.2	ND	U	g	6.0	ND	U	g	0.1	ND	U	g
Naphthalene	0.04		1.2	28		g	27	ND	U	g	0.1	ND	U	g
4-Chloroaniline	0.10		3.6	ND	U	g	11	ND	U	g	0.4	ND	U	g
Hexachlorobutadiene	0.03		1.2	ND	U	g	3.6	ND	U	g	0.1	ND	U	g
4-Chloro-3-Methylphenol	0.06		2.1	ND	U	g	6.2	ND	U	g	0.2	ND	U	g
2-Methylnaphthalene	0.03		1.2	84 E**	J	n	3.6	95		g	0.2	ND	U	g
Hexachlorocyclopentadiene	0.03		0.9	ND	U	g	2.7	ND	U	g	0.1	ND	U	g
2,4,6-Trichlorophenol	0.04		1.5	ND	U	g	4.5	ND	U	g	0.2	ND	U	g
2,4,5-Trichlorophenol	0.03		0.88	ND	U	g	2.7	ND	U	g	0.09	ND	U	g
2-Chloronaphthalene	0.03		1.2	ND	U	g	3.5	ND	U	g	0.1	ND	U	g
2-Nitroaniline	0.02		4.7	ND	U	g	7.0	ND	U	g	0.41	ND	U	g
Dimethyl Phthalate	0.04		1.2	ND	U	g	3.7	ND	U	g	0.1	ND	U	g
Acenaphthylene	0.04		1.4	ND	U	g	4.3	ND	U	g	0.1	ND	U	g
3-Nitroaniline	0.11		3.9	ND	U	g	12	ND	U	g	0.39	ND	U	g
Acenaphthene	0.03		1.1	3.5		g	3.2	4.8		g	0.1	ND	U	g
2,4-Dinitrophenol	0.09		3.1	ND	U	g	9.4	ND	U	g	0.32	ND	U	g
4-Nitrophenol	0.07		7.5	ND	U	g	14	ND	U	g	0.24	ND	U	g
Dibenzofuran	0.03		1.1	3.0		g	3.3	3.8		g	0.1	ND	U	g
2,6-Dinitrotoluene	0.04		2.6	ND	U	g	5.1	ND	U	g	0.2	ND	U	g

** Analyte detected above linear calibration range.

Base: Kotzebue LRRS						Table 6.2.1.4								
Site: SS12						Analytical Data Summary								
Extraction Method: EPA Method 3550						EPA Method 8270								
Analytical Method: EPA Method 8270														
Matrix: Soil														
Units: mg/kg														
			Environmental Samples											
		Field ID:		SS12-SB7-1.5				SS12-SB7-1.5DL				SS12-SB9-2.0		
		Batch ID:		H607				H607				H607		
Parameters	MDL		PQL	Result	Validity	Comments	PQL	Result	Validity	Comments	PQL	Result	Validity	Comments
								Dilution 3						
2,4-Dinitrotoluene	0.02		0.8	ND	U	g	2.3	ND	U	g	0.1	ND	U	g
Diethyl Phthalate	0.04		1.2	ND	U	g	3.7	ND	U	g	0.1	ND	U	g
4-Chlorophenyl Phenyl Ether	0.02		0.8	ND	U	g	2.3	ND	U	g	0.1	ND	U	g
Fluorene	0.03		1.1	4.2		g	3.2	5.5		g	0.1	ND	U	g
4-Nitroaniline	0.13		4.7	ND	U	g	14	ND	U	g	0.47	ND	U	g
4,6-Dinitro-2-Methylphenol	0.09		3.1	ND	U	g	9.4	ND	U	g	0.32	ND	U	g
N-Nitrosodiphenylamine	0.08		3.0	ND	U	g	8.9	ND	U	g	0.3	ND	U	g
4-Bromophenyl Phenyl Ether	0.02		0.8	ND	U	g	2.3	ND	U	g	0.1	ND	U	g
Hexachlorobenzene	0.03		1.1	ND	U	g	3.4	ND	U	g	0.1	ND	U	g
Pentachlorophenol	0.03		1.2	ND	U	g	3.5	ND	U	g	0.12	ND	U	g
Phenanthrene	0.03		1.2	5.4		g	3.5	5.6		g	0.1	ND	U	g
Anthracene	0.04		1.5	0.8	J		4.6	ND	U	g	0.2	ND	U	g
di-n-butyl Phthalate	0.06		2.2	ND	U	g	6.6	ND	U	g	0.2	ND	U	g
Fluroanthene	0.03		1.2	1.7		g	3.6	ND	U	g	0.1	0.1		g
Pyrene	0.03		1.0	1.1		g	3.0	ND	U	g	0.1	0.3		g
Butylbenzylphthalate	0.02		0.8	ND	U	g	2.3	ND	U	g	0.1	ND	U	g
3,3'-Dichlorobenzidine	0.06		2.0	ND	U	g	6.1	ND	U	g	0.2	ND	U	g
Benzo(a)anthracene	0.04		1.4	ND	U	g	4.1	ND	U	g	0.1	0.05	J	
bis(2-Ethylhexyl) Phthalate	0.04		1.4	ND	U	g	4.2	ND	U	g	0.1	0.05	J	
Chrysene	0.05		1.6	ND	U	g	4.8	ND	U	g	0.2	0.1	J	
di-n-Octylphthalate	0.02		0.8	ND	U	g	2.4	ND	U	g	0.1	ND	U	g
Benzo(b)fluoranthene	0.04		1.5	ND	U	g	4.6	ND	U	g	0.2	ND	U	g
Benzo(k)fluoranthene	0.07		2.6	ND	U	g	7.9	ND	U	g	0.3	ND	U	g
Benzo(a)pyrene	0.04		1.4	ND	U	g	4.2	ND	U	g	0.1	ND	U	g
Indeno(1,2,3-c,d)pyrene	0.03		0.9	ND	U	g	2.8	ND	U	g	0.1	ND	U	g
Dibenzo(a,h)anthracene	0.02		0.8	ND	U	g	2.3	ND	U	g	0.1	ND	U	g
Benzo(g,h,i)perylene	0.03		1.1	ND	U	g	3.4	ND	U	g	0.1	ND	U	g

Base: Kotzebue LRRS
Site: SS12
Extraction Method: EPA Method 3550
Analytical Method: EPA Method 8270
Matrix: Soil
Units: mg/kg

Table 6.2.1.4
Analytical Data Summary
EPA Method 8270

			Environmental Samples											
		Field ID:		SS12-SB16-1.5				SS12-SB16-1.5DL				SS12-SB20-1.0		
		Batch ID:		H615				H615				H615		
Parameters	MDL		PQL	Result	Validity	Comments	PQL	Result	Validity	Comments	PQL	Result	Validity	Comments
								Dilution 4						
Phenol	0.05		0.2	ND	U	g	1.0	ND	U	g	0.7	ND	U	g
bis(2-Chloroethyl) Ether	0.04		0.2	ND	U	g	0.7	ND	U	g	0.5	ND	U	g
2-Chlorophenol	0.07		0.3	ND	U	g	1.3	ND	U	g	0.9	ND	U	g
1,3-Dichlorobenzene	0.04		0.2	ND	U	k	0.7	ND	U	k	0.5	ND	U	k
1,4-Dichlorobenzene	0.03		0.1	ND	U	g	0.5	ND	U	g	0.3	ND	U	g
Benzyl Alcohol	0.05		0.2	ND	U	g	0.9	ND	U	g	0.6	ND	U	g
1,2-Dichlorobenzene	0.04		0.2	ND	U	g	0.7	ND	U	g	0.5	ND	U	g
2-Methylphenol	0.10		0.5	ND	U	g	1.8	ND	U	g	1.2	ND	U	g
2,2'-Oxybis (1-Chloropropane)	0.03		0.2	ND	U	g	0.6	ND	U	g	0.4	ND	U	g
4-Methylphenol	0.08		0.4	ND	U	g	1.4	ND	U	g	0.9	0.7	J	
N-Nitrosodi-n-propylamine	0.03		2.2	ND	U	g	0.5	ND	U	g	0.3	ND	U	g
Hexachloroethane	0.04		0.2	ND	U	g	0.7	ND	U	g	0.5	ND	U	g
Nitrobenzene	0.02		1.1	ND	U	g	6.5	ND	U	g	0.7	ND	U	g
Isophorone	0.03		4.1	ND	U	g	8.0	ND	U	g	2.5	ND	U	g
2-Nitrophenol	0.03		0.2	ND	U	g	1.1	ND	U	g	0.4	ND	U	g
2,4-Dimethylphenol	0.17		0.4	ND	U	g	6.2	ND	U	g	1.2	ND	U	g
Benzoic Acid	0.06		0.51	ND	U	g	3.8	ND	U	g	0.70	ND	U	g
bis(2-Chloroethoxy) Methane	0.04		0.2	ND	U	g	0.7	ND	U	g	0.4	ND	U	g
2,4-Dichlorophenol	0.04		0.2	ND	U	g	1.4	ND	U	g	0.5	ND	U	g
1,2,4-Trichlorobenzene	0.03		0.2	ND	U	g	0.6	ND	U	g	0.4	ND	U	g
Naphthalene	0.04		0.2	1.0		g	4.1	ND	U	g	0.4	1.2		g
4-Chloroaniline	0.10		0.7	ND	U	g	5.1	ND	U	g	1.3	ND	U	g
Hexachlorobutadiene	0.03		0.2	ND	U	g	0.6	ND	U	g	0.4	ND	U	g
4-Chloro-3-Methylphenol	0.06		0.4	ND	U	g	1.1	ND	U	g	1.7	ND	U	g
2-Methylnaphthalene	0.03		0.2	5.3		g	0.6	7.6		g	0.4	4.2		g
Hexachlorocyclopentadiene	0.03		0.1	ND	U	g	0.5	ND	U	g	0.3	ND	U	g
2,4,6-Trichlorophenol	0.04		0.2	ND	U	g	0.8	ND	U	g	0.5	ND	U	g
2,4,5-Trichlorophenol	0.03		0.12	ND	U	g	0.46	ND	U	g	0.31	ND	U	g
2-Chloronaphthalene	0.03		0.2	ND	U	g	0.6	ND	U	g	0.4	ND	U	g
2-Nitroaniline	0.02		1.1	ND	U	g	2.4	ND	U	g	1.5	ND	U	g
Dimethyl Phthalate	0.04		0.2	ND	U	g	0.7	ND	U	g	0.4	ND	U	g
Acenaphthylene	0.04		0.5	ND	U	g	0.7	ND	U	g	0.5	ND	U	g
3-Nitroaniline	0.11		0.51	ND	U	g	2.0	ND	U	g	2.0	ND	U	g
Acenaphthene	0.03		0.7	ND	U	g	0.7	ND	U	g	0.4	ND	U	g
2,4-Dinitrophenol	0.09		0.41	ND	U	g	1.6	ND	U	g	1.1	ND	U	g
4-Nitrophenol	0.07		2.8	ND	U	g	14	ND	U	g	5.0	ND	U	g
Dibenzofuran	0.03		0.1	ND	U	g	0.9	ND	U	g	0.4	ND	U	g
2,6-Dinitrotoluene	0.04		0.4	ND	U	g	2.2	ND	U	g	0.5	ND	U	g

Base: Kotzebue LRRS						Table 6.2.1.4								
Site: SS12						Analytical Data Summary								
Extraction Method: EPA Method 3550						EPA Method 8270								
Analytical Method: EPA Method 8270														
Matrix: Soil														
Units: mg/kg														
			Environmental Samples											
		Field ID:		SS12-SB16-1.5				SS12-SB16-1.5DL				SS12-SB20-1.0		
		Batch ID:		H615				H615				H615		
Parameters	MDL		PQL	Result	Validity	Comments	PQL	Result	Validity	Comments	PQL	Result	Validity	Comments
								Dilution 4						
2,4-Dinitrotoluene	0.02		0.4	ND	U	g	2.0	ND	U	g	0.8	ND	U	g
Diethyl Phthalate	0.04		0.3	ND	U	g	0.6	ND	U	g	0.4	ND	U	g
4-Chlorophenyl Phenyl Ether	0.02		0.9	ND	U	g	0.4	ND	U	g	0.3	ND	U	g
Fluorene	0.03		1.0	ND	U	g	0.6	1.3		g	0.4	0.9		g
4-Nitroaniline	0.13		0.61	ND	U	g	2.4	ND	U	g	1.6	ND	U	g
4,6-Dinitro-2-Methylphenol	0.09		0.41	ND	U	g	1.6	ND	U	g	1.1	ND	U	g
N-Nitrosodiphenylamine	0.08		0.4	ND	U	g	1.6	ND	U	g	1.0	ND	U	g
4-Bromophenyl Phenyl Ether	0.02		0.1	ND	U	g	0.4	ND	U	g	0.3	ND	U	g
Hexachlorobenzene	0.03		0.1	ND	U	g	0.6	ND	U	g	0.4	ND	U	g
Pentachlorophenol	0.03		0.15	ND	U	g	0.61	ND	U	g	0.41	ND	U	g
Phenanthrene	0.03		0.2	0.1	J		0.6	ND	U	g	0.4	0.2	J	
Anthracene	0.04		0.2	ND	U	g	0.8	ND	U	g	0.5	ND	U	g
di-n-butyl Phthalate	0.06		0.3	ND	U	g	1.2	ND	U	g	0.8	ND	U	g
Fluroanthene	0.03		0.2	ND	U	g	0.6	ND	U	g	0.4	ND	U	g
Pyrene	0.03		0.1	ND	U	g	0.5	ND	U	g	0.4	ND	U	g
Butylbenzylphthalate	0.02		0.1	ND	U	g	0.4	ND	U	g	0.3	ND	U	g
3,3'-Dichlorobenzidine	0.06		0.3	ND	U	g	1.1	ND	U	g	0.7	ND	U	g
Benzo(a)anthracene	0.04		0.2	ND	U	g	0.7	ND	U	g	0.5	ND	U	g
bis(2-Ethylhexyl) Phthalate	0.04		0.2	0.8		g	0.7	0.7		g	0.5	0.2	J	
Chrysene	0.05		0.2	ND	U	g	0.8	ND	U	g	0.6	ND	U	g
di-n-Octylphthalate	0.02		0.1	ND	U	g	0.4	ND	U	g	0.3	ND	U	g
Benzo(b)fluoranthene	0.04		0.2	ND	U	g	0.8	ND	U	g	0.5	ND	U	g
Benzo(k)fluoranthene	0.07		0.3	ND	U	g	1.4	ND	U	g	0.9	ND	U	g
Benzo(a)pyrene	0.04		0.2	ND	U	g	0.7	ND	U	g	0.5	ND	U	g
Indeno(1,2,3-c,d)pyrene	0.03		0.1	ND	U	g	0.5	ND	U	g	0.3	ND	U	g
Dibenzo(a,h)anthracene	0.02		0.1	ND	U	g	0.4	ND	U	g	0.3	ND	U	g
Benzo(g,h,i)perylene	0.03		0.1	ND	U	g	0.6	ND	U	g	0.4	ND	U	g

Base: Kotzebue LRRS
Site: SS12
Extraction Method: EPA Method 3550
Analytical Method: EPA Method 8270
Matrix: Soil
Units: mg/kg

Table 6.2.1.4
Analytical Data Summary
EPA Method 8270

Environmental Samples

		Field ID:	SS12-SB23-0.5			
		Batch ID:	H615			
Parameters	MDL	PQL	Result	Validity	Comments	
Phenol	0.05	0.4	0.1	J		
bis(2-Chloroethyl) Ether	0.04	0.3	ND	U	g	
2-Chlorophenol	0.07	0.5	ND	U	g	
1,3-Dichlorobenzene	0.04	0.3	ND	U	k	
1,4-Dichlorobenzene	0.03	0.2	ND	U	g	
Benzyl Alcohol	0.05	0.3	ND	U	g	
1,2-Dichlorobenzene	0.04	0.3	ND	U	g	
2-Methylphenol	0.10	0.7	ND	U	g	
2,2'-Oxybis (1-Chloropropane)	0.03	0.2	ND	U	g	
4-Methylphenol	0.08	0.5	0.2	J		
N-Nitrosodi-n-propylamine	0.03	0.2	ND	U	g	
Hexachloroethane	0.04	0.3	ND	U	g	
Nitrobenzene	0.02	0.2	ND	U	g	
Isophorone	0.03	0.2	ND	U	g	
2-Nitrophenol	0.03	0.2	ND	U	g	
2,4-Dimethylphenol	0.17	0.6	ND	U	g	
Benzoic Acid	0.06	0.38	0.32	J		
bis(2-Chloroethoxy) Methane	0.04	0.2	ND	U	g	
2,4-Dichlorophenol	0.04	0.3	ND	U	g	
1,2,4-Trichlorobenzene	0.03	0.2	ND	U	g	
Naphthalene	0.04	0.2	ND	U	g	
4-Chloroaniline	0.10	0.7	ND	U	g	
Hexachlorobutadiene	0.03	0.2	ND	U	g	
4-Chloro-3-Methylphenol	0.06	0.4	ND	U	g	
2-Methylnaphthalene	0.03	0.2	0.1	J		
Hexachlorocyclopentadiene	0.03	0.2	ND	U	g	
2,4,6-Trichlorophenol	0.04	0.3	ND	U	g	
2,4,5-Trichlorophenol	0.03	0.17	ND	U	g	
2-Chloronaphthalene	0.03	0.2	ND	U	g	
2-Nitroaniline	0.02	0.13	ND	U	g	
Dimethyl Phthalate	0.04	0.2	ND	U	g	
Acenaphthylene	0.04	0.3	ND	U	g	
3-Nitroaniline	0.11	0.74	ND	U	g	
Acenaphthene	0.03	0.2	ND	U	g	
2,4-Dinitrophenol	0.09	0.60	ND	U	g	
4-Nitrophenol	0.07	0.52	ND	U	g	
Dibenzofuran	0.03	0.2	ND	U	g	
2,6-Dinitrotoluene	0.04	0.3	ND	U	g	

Base: Kotzebue LRRS
Site: SS12
Extraction Method: EPA Method 3550
Analytical Method: EPA Method 8270
Matrix: Soil
Units: mg/kg

Table 6.2.1.4
Analytical Data Summary
EPA Method 8270

			Environmental Samples			
		Field ID:		SS12-SB23-0.5		
		Batch ID:		H615		
Parameters	MDL		PQL	Result	Validity	Comments
2,4-Dinitrotoluene	0.02		0.1	ND	U	g
Diethyl Phthalate	0.04		0.2	ND	U	g
4-Chlorophenyl Phenyl Ether	0.02		0.1	ND	U	g
Fluorene	0.03		0.2	ND	U	g
4-Nitroaniline	0.13		0.89	ND	U	g
4,6-Dinitro-2-Methylphenol	0.09		0.60	ND	U	g
N-Nitrosodiphenylamine	0.08		0.6	ND	U	g
4-Bromophenyl Phenyl Ether	0.02		0.1	ND	U	g
Hexachlorobenzene	0.03		0.2	ND	U	g
Pentachlorophenol	0.03		0.22	ND	U	g
Phenanthrene	0.03		0.2	ND	U	g
Anthracene	0.04		0.3	ND	U	g
di-n-butyl Phthalate	0.06		0.4	ND	U	g
Fluroanthene	0.03		0.2	ND	U	g
Pyrene	0.03		0.2	ND	U	g
Butylbenzylphthalate	0.02		0.1	ND	U	g
3,3'-Dichlorobenzidine	0.06		0.4	ND	U	g
Benzo(a)anthracene	0.04		0.3	ND	U	g
bis(2-Ethylhexyl) Phthalate	0.04		0.3	2.4		g
Chrysene	0.05		0.3	ND	U	g
di-n-Octylphthalate	0.02		0.2	ND	U	g
Benzo(b)fluoranthene	0.04		0.3	ND	U	g
Benzo(k)fluoranthene	0.07		0.5	ND	U	g
Benzo(a)pyrene	0.04		0.3	ND	U	g
Indeno(1,2,3-c,d)pyrene	0.03		0.2	ND	U	g
Dibenzo(a,h)anthracene	0.02		0.1	ND	U	g
Benzo(g,h,i)perylene	0.03		0.2	ND	U	g

Base: Kotzebue LRRS
Site: SS12
Extraction Method: EPA Method 3550
Analytical Method: EPA Method 8270
Matrix: Soil
Units: mg/kg

Table 6.2.1.4
Analytical Data Summary
EPA Method 8270

			Environmental Samples			
		Field ID:		SS12-SD4		
		Batch ID:		H746		
Parameters	MDL		PQL	Result	Validity	Comments
Phenol	0.05		0.3	ND	U	g
bis(2-Chloroethyl) Ether	0.04		0.2	ND	U	g
2-Chlorophenol	0.07		0.4	ND	U	g
1,3-Dichlorobenzene	0.04		0.2	ND	U	g
1,4-Dichlorobenzene	0.03		0.1	ND	U	g
Benzyl Alcohol	0.06		0.3	ND	U	g
1,2-Dichlorobenzene	0.04		0.2	ND	U	g
2-Methylphenol	0.10		0.5	ND	U	g
2,2'-Oxybis (1-Chloropropane)	0.03		0.2	ND	U	g
4-Methylphenol	0.08		0.4	ND	U	g
N-Nitrosodi-n-propylamine	0.03		0.1	ND	U	g
Hexachloroethane	0.04		0.2	ND	U	g
Nitrobenzene	0.02		0.1	ND	U	g
Isophorone	0.03		0.2	ND	U	g
2-Nitrophenol	0.03		0.2	ND	U	g
2,4-Dimethylphenol	0.17		0.5	ND	U	g
Benzoic Acid	0.06		0.29	ND	U	g
bis(2-Chloroethoxy) Methane	0.04		0.2	ND	U	g
2,4-Dichlorophenol	0.04		0.2	ND	U	g
1,2,4-Trichlorobenzene	0.03		0.2	ND	U	g
Naphthalene	0.04		0.2	ND	U	g
4-Chloroaniline	0.10		0.5	ND	U	g
Hexachlorobutadiene	0.03		0.2	ND	U	g
4-Chloro-3-Methylphenol	0.06		0.3	ND	U	g
2-Methylnaphthalene	0.03		0.2	ND	U	g
Hexachlorocyclopentadiene	0.03		0.1	ND	U	g
2,4,6-Trichlorophenol	0.04		0.2	ND	U	g
2,4,5-Trichlorophenol	0.03		0.13	ND	U	g
2-Chloronaphthalene	0.03		0.2	ND	U	g
2-Nitroaniline	0.02		0.10	ND	U	g
Dimethyl Phthalate	0.04		0.2	ND	U	g
Acenaphthylene	0.04		0.2	ND	U	g
3-Nitroaniline	0.11		0.56	ND	U	g
Acenaphthene	0.03		0.2	ND	U	g
2,4-Dinitrophenol	0.09		0.45	ND	U	g
4-Nitrophenol	0.07		0.34	ND	U	g
Dibenzofuran	0.03		0.2	ND	U	g
2,6-Dinitrotoluene	0.04		0.2	ND	U	g

Base: Kotzebue LRRS						Table 6.2.1.4								
Site: SS12						Analytical Data Summary								
Extraction Method: EPA Method 3550						EPA Method 8270								
Analytical Method: EPA Method 8270														
Matrix: Soil														
Units: mg/kg														
			Environmental Samples											
		Field ID:		SS12-SD4										
		Batch ID:		H746										
Parameters	MDL		PQL	Result	Validity	Comments								
2,4-Dinitrotoluene	0.02		0.1	ND	U	g								
Diethyl Phthalate	0.04		0.2	ND	U	g								
4-Chlorophenyl Phenyl Ether	0.02		0.1	ND	U	g								
Fluorene	0.03		0.2	ND	U	g								
4-Nitroaniline	0.13		0.67	ND	U	g								
4,6-Dinitro-2-Methylphenol	0.09		0.45	ND	U	g								
N-Nitrosodiphenylamine	0.08		0.4	ND	U	g								
4-Bromophenyl Phenyl Ether	0.02		0.1	ND	U	g								
Hexachlorobenzene	0.03		0.2	ND	U	g								
Pentachlorophenol	0.03		0.17	ND	U	g								
Phenanthrene	0.03		0.2	ND	U	g								
Anthracene	0.04		0.2	ND	U	g								
di-n-butyl Phthalate	0.06		0.3	ND	U	g								
Fluroanthene	0.03		0.2	ND	U	g								
Pyrene	0.03		0.1	ND	U	g								
Butylbenzylphthalate	0.02		0.1	ND	U	g								
3,3'-Dichlorobenzidine	0.06		0.3	ND	U	g								
Benzo(a)anthracene	0.04		0.2	ND	U	g								
bis(2-Ethylhexyl) Phthalate	0.04		0.2	0.1	J									
Chrysene	0.05		0.2	ND	U	g								
di-n-Octylphthalate	0.02		0.1	ND	U	g								
Benzo(b)fluoranthene	0.04		0.2	ND	U	g								
Benzo(k)fluoranthene	0.07		0.4	ND	U	g								
Benzo(a)pyrene	0.04		0.2	ND	U	g								
Indeno(1,2,3-c,d)pyrene	0.03		0.1	ND	U	g								
Dibenzo(a,h)anthracene	0.02		0.1	ND	U	g								
Benzo(g,h,i)perylene	0.03		0.2	ND	U	g								

Base: Kotzebue LRRS
Site: SS12
Extraction Method: EPA Method 3550
Analytical Method: EPA Method 8270
Matrix: Soil
Units: mg/kg

Table 6.2.1.4
Analytical Data Summary
EPA Method 8270

			Environmental Samples							
		Field ID:		SS12-SB27-7.8				SS12-SB27-7.8DL		
		Batch ID:		H753				H753		
Parameters	MDL		PQL	Result	Validity	Comments	PQL	Result Dilution 3	Validity	Comments
Phenol	0.05		2.0	ND	U	g	5.9	ND	U	g
bis(2-Chloroethyl) Ether	0.04		1.4	ND	U	g	4.3	ND	U	g
2-Chlorophenol	0.07		2.6	ND	U	g	7.8	ND	U	g
1,3-Dichlorobenzene	0.04		1.4	ND	U	g	4.2	ND	U	g
1,4-Dichlorobenzene	0.03		0.9	ND	U	g	2.8	ND	U	g
Benzyl Alcohol	0.05		1.9	ND	U	g	5.6	ND	U	g
1,2-Dichlorobenzene	0.04		1.4	ND	U	g	4.1	ND	U	g
2-Methylphenol	0.10		3.6	ND	U	g	11	ND	U	g
2,2'-Oxybis (1-Chloropropane)	0.03		1.2	ND	U	g	3.6	ND	U	g
4-Methylphenol	0.08		2.8	ND	U	g	8.4	ND	U	g
N-Nitrosodi-n-propylamine	0.03		1.0	ND	U	g	2.9	ND	U	g
Hexachloroethane	0.04		1.4	ND	U	g	4.3	ND	U	g
Nitrobenzene	0.02		1.8	ND	U	g	3.7	ND	U	g
Isophorone	0.03		1.2	ND	U	g	3.6	ND	U	g
2-Nitrophenol	0.03		3.5	ND	U	g	3.7	ND	U	g
2,4-Dimethylphenol	0.17		3.4	ND	U	g	10	ND	U	g
Benzoic Acid	0.06		2.1	ND	U	g	6.2	ND	U	g
bis(2-Chloroethoxy) Methane	0.04		1.6	ND	U	g	3.9	ND	U	g
2,4-Dichlorophenol	0.04		1.6	ND	U	g	4.8	ND	U	g
1,2,4-Trichlorobenzene	0.03		1.2	ND	U	g	3.6	ND	U	g
Naphthalene	0.04		1.3	31		g	3.9	32		g
4-Chloroaniline	0.10		3.7	ND	U	g	11	ND	U	g
Hexachlorobutadiene	0.03		1.2	ND	U	g	3.7	ND	U	g
4-Chloro-3-Methylphenol	0.06		2.1	ND	U	g	6.4	ND	U	g
2-Methylnaphthalene	0.03		1.2	62 E**	J	n	3.7	64		g
Hexachlorocyclopentadiene	0.03		0.9	ND	U	g	2.8	ND	U	g
2,4,6-Trichlorophenol	0.04		1.5	ND	U	g	4.6	ND	U	g
2,4,5-Trichlorophenol	0.03		0.91	ND	U	g	2.7	ND	U	g
2-Chloronaphthalene	0.03		1.2	ND	U	g	3.6	ND	U	g
2-Nitroaniline	0.02		2.2	ND	U	g	2.1	ND	U	g
Dimethyl Phthalate	0.04		1.3	ND	U	g	3.9	ND	U	g
Acenaphthylene	0.04		1.5	ND	U	g	4.4	ND	U	g
3-Nitroaniline	0.11		4.0	ND	U	g	12	ND	U	g
Acenaphthene	0.03		1.1	0.7	J		3.3	ND	U	g
2,4-Dinitrophenol	0.09		3.2	ND	U	g	9.7	ND	U	g
4-Nitrophenol	0.07		4.7	ND	U	g	7.2	ND	U	g
Dibenzofuran	0.03		1.1	1.1	J	g	3.4	ND	U	g
2,6-Dinitrotoluene	0.04		1.5	ND	U	g	4.6	ND	U	g

** Analyte detected above linear calibration range.

Base: Kotzebue LRRS						Table 6.2.1.4							
Site: SS12						Analytical Data Summary							
Extraction Method: EPA Method 3550						EPA Method 8270							
Analytical Method: EPA Method 8270													
Matrix: Soil													
Units: mg/kg													
			Environmental Samples										
		Field ID:		SS12-SB27-7.8				SS12-SB27-7.8DL					
		Batch ID:		H753				H753					
Parameters	MDL		PQL	Result	Validity	Comments	PQL	Result	Validity	Comments			
								Dilution 3					
2,4-Dinitrotoluene	0.02		0.8	ND	U	g	2.4	ND	U	g			
Diethyl Phthalate	0.04		1.3	ND	U	g	3.8	ND	U	g			
4-Chlorophenyl Phenyl Ether	0.02		0.8	ND	U	g	2.4	ND	U	g			
Fluorene	0.03		1.1	1.2		g	3.3	ND	U	g			
4-Nitroaniline	0.13		4.8	ND	U	g	14	ND	U	g			
4,6-Dinitro-2-Methylphenol	0.09		3.2	ND	U	g	9.7	ND	U	g			
N-Nitrosodiphenylamine	0.08		3.1	ND	U	g	9.2	ND	U	g			
4-Bromophenyl Phenyl Ether	0.02		0.8	ND	U	g	2.4	ND	U	g			
Hexachlorobenzene	0.03		1.2	ND	U	g	3.5	ND	U	g			
Pentachlorophenol	0.03		1.2	ND	U	g	3.6	ND	U	g			
Phenanthrene	0.03		1.2	ND	U	g	3.6	ND	U	g			
Anthracene	0.04		1.6	ND	U	g	4.8	ND	U	g			
di-n-butyl Phthalate	0.06		2.3	ND	U	g	6.8	ND	U	g			
Fluroanthene	0.03		1.2	ND	U	g	3.7	ND	U	g			
Pyrene	0.03		1.0	ND	U	g	3.1	ND	U	g			
Butylbenzylphthalate	0.02		0.8	ND	U	g	2.4	ND	U	g			
3,3'-Dichlorobenzidine	0.06		2.1	ND	U	g	6.3	ND	U	g			
Benzo(a)anthracene	0.04		1.4	ND	U	g	4.2	ND	U	g			
bis(2-Ethylhexyl) Phthalate	0.04		1.5	ND	U	g	4.4	ND	U	g			
Chrysene	0.05		1.6	ND	U	g	4.9	ND	U	g			
di-n-Octylphthalate	0.02		0.8	ND	U	g	2.5	ND	U	g			
Benzo(b)fluoranthene	0.04		1.6	ND	U	g	4.7	ND	U	g			
Benzo(k)fluoranthene	0.07		2.7	ND	U	g	8.2	ND	U	g			
Benzo(a)pyrene	0.04		1.4	ND	U	g	4.3	ND	U	g			
Indeno(1,2,3-c,d)pyrene	0.03		1.0	ND	U	g	2.9	ND	U	g			
Dibenzo(a,h)anthracene	0.02		0.8	ND	U	g	2.4	ND	U	g			
Benzo(g,h,i)perylene	0.03		1.2	ND	U	g	3.5	ND	U	g			

Base: Kotzebue LRRS						Table 6.2.1.4								
Site: SS12						Analytical Data Summary								
Extraction Method: EPA Method 3550						EPA Method 8270								
Analytical Method: EPA Method 8270														
Matrix: Soil														
Units: mg/kg														
			Environmental Samples											
		Field ID:		SS12-SD5-01										
		Batch ID:		H859										
Parameters	MDL		PQL	Result	Validity	Comments								
Phenol	2.0		0.4	ND	U	g								
bis(2-Chloroethyl) Ether	1.4		0.3	ND	U	g								
2-Chlorophenol	2.6		0.5	ND	U	g								
1,3-Dichlorobenzene	1.4		0.3	ND	U	g								
1,4-Dichlorobenzene	0.9		0.2	ND	U	g								
Benzyl Alcohol	1.9		0.4	ND	U	g								
1,2-Dichlorobenzene	1.4		0.3	ND	U	g								
2-Methylphenol	3.6		0.7	ND	U	g								
2,2'-Oxybis (1-Chloropropane)	1.2		0.2	ND	U	g								
4-Methylphenol	2.8		0.6	ND	U	g								
N-Nitrosodi-n-propylamine	1.0		0.2	ND	U	g								
Hexachloroethane	1.4		0.3	ND	U	g								
Nitrobenzene	0.9		0.2	ND	U	g								
Isophorone	1.2		1.3	ND	U	g								
2-Nitrophenol	1.2		0.8	ND	U	g								
2,4-Dimethylphenol	3.4		1.9	ND	U	g								
Benzoic Acid	2.1		0.41	ND	U	g								
bis(2-Chloroethoxy) Methane	1.3		0.3	ND	U	g								
2,4-Dichlorophenol	1.6		0.3	ND	U	g								
1,2,4-Trichlorobenzene	1.2		0.2	ND	U	g								
Naphthalene	1.3		0.3	ND	U	g								
4-Chloroaniline	3.7		0.8	ND	U	g								
Hexachlorobutadiene	1.2		0.2	ND	U	g								
4-Chloro-3-Methylphenol	2.1		0.4	ND	U	g								
2-Methylnaphthalene	1.2		0.2	ND	U	g								
Hexachlorocyclopentadiene	0.9		0.2	ND	U	g								
2,4,6-Trichlorophenol	1.5		0.3	ND	U	g								
2,4,5-Trichlorophenol	0.91		0.18	ND	U	g								
2-Chloronaphthalene	1.2		0.2	ND	U	g								
2-Nitroaniline	0.69		0.69	ND	U	g								
Dimethyl Phthalate	1.3		0.3	ND	U	g								
Acenaphthylene	1.5		0.3	ND	U	g								
3-Nitroaniline	4.0		1.1	ND	U	g								
Acenaphthene	1.1		0.2	ND	U	g								
2,4-Dinitrophenol	3.2		0.65	ND	U	g								
4-Nitrophenol	2.4		4.8	ND	U	g								
Dibenzofuran	1.1		0.2	ND	U	g								
2,6-Dinitrotoluene	1.5		0.4	ND	U	g								

Base: Kotzebue LRRS						Table 6.2.1.4								
Site: SS12						Analytical Data Summary								
Extraction Method: EPA Method 3550						EPA Method 8270								
Analytical Method: EPA Method 8270														
Matrix: Soil														
Units: mg/kg														
			Environmental Samples											
		Field ID:		SS12-SD5-01										
		Batch ID:		H859										
Parameters	MDL		PQL	Result	Validity	Comments								
2,4-Dinitrotoluene	0.02		0.3	ND	U	g								
Diethyl Phthalate	0.04		0.3	ND	U	g								
4-Chlorophenyl Phenyl Ether	0.02		0.2	ND	U	g								
Fluorene	0.03		0.2	ND	U	g								
4-Nitroaniline	0.13		0.97	ND	U	g								
4,6-Dinitro-2-Methylphenol	0.09		0.65	ND	U	g								
N-Nitrosodiphenylamine	0.08		0.6	ND	U	g								
4-Bromophenyl Phenyl Ether	0.02		0.2	ND	U	g								
Hexachlorobenzene	0.03		0.2	ND	U	g								
Pentachlorophenol	0.03		0.24	ND	U	g								
Phenanthrene	0.03		0.2	ND	U	g								
Anthracene	0.04		0.3	ND	U	g								
di-n-butyl Phthalate	0.06		0.5	ND	U	g								
Fluroanthene	0.03		0.2	ND	U	g								
Pyrene	0.03		0.2	ND	U	g								
Butylbenzylphthalate	0.02		0.2	ND	U	g								
3,3'-Dichlorobenzidine	0.06		0.4	ND	U	g								
Benzo(a)anthracene	0.04		0.3	ND	U	g								
bis(2-Ethylhexyl) Phthalate	0.04		0.3	0.1	J									
Chrysene	0.05		0.3	ND	U	g								
di-n-Octylphthalate	0.02		0.2	ND	U	g								
Benzo(b)fluoranthene	0.04		0.3	ND	U	g								
Benzo(k)fluoranthene	0.07		0.5	ND	U	g								
Benzo(a)pyrene	0.04		0.3	ND	U	g								
Indeno(1,2,3-c,d)pyrene	0.03		0.2	ND	U	g								
Dibenzo(a,h)anthracene	0.02		0.2	ND	U	g								
Benzo(g,h,i)perylene	0.03		0.2	ND	U	g								

Base: Kotzebue LRRS						Table 2.2.1								
Site: SS12						Analytical Data Summary								
Extraction Method: EPA Method 3510						Method AK102								
Analytical Method: Method AK102														
Matrix: Water														
Units: mg/L														
			Environmental Samples											
		Field ID:		SS12-SW1-01				SS12-SW1-01DL				SS12-SW2-01		
		Batch ID:		H686				H686				H686		
Parameters	MDL		PQL	Result	Validity	Comments	PQL	Result	Validity	Comments	PQL	Result	Validity	Comments
								Dilution 10						
Diesel Hydrocarbons	0.06		0.1	14 E*	J	n	1.1	7.0		g	0.11	18	J	n
* Analyte detected above linear calibration range.														

Base: Kotzebue LRRS						Table 2.2.1								
Site: SS12						Analytical Data Summary								
Extraction Method: EPA Method 3510						Method AK102								
Analytical Method: Method AK102														
Matrix: Water														
Units: mg/L														
			Environmental Samples											
		Field ID:	SS12-SW2-01DL					SS12-SW3-01				SS12-SW4-01		
		Batch ID:	H686					H686				H686		
Parameters	MDL		PQL	Result	Validity	Comments	PQL	Result	Validity	Comments	PQL	Result	Validity	Comments
				Dilution 10										
Diesel Hydrocarbons	0.06		1.1	8.8		g	0.11	2.0		g	0.11	0.14		g

Base: Kotzebue LRRS						Table 2.2.1							
Site: SS12						Analytical Data Summary							
Extraction Method: EPA Method 3510						Method AK102							
Analytical Method: Method AK102													
Matrix: Water													
Units: mg/L													
			Environmental Samples										
		Field ID:		SS12-SW5-01									
		Batch ID:		H859									
Parameters	MDL		PQL	Result	Validity	Comments							
Diesel Hydrocarbons	0.06		0.11	0.13		g							

Base: Kotzebue LRRS						Table 2.2.2								
Site: SS12						Analytical Data Summary								
Extraction Method: EPA Method 3010 (unfiltered)/3005 (filtered)						EPA Method 6010								
Analytical Method: EPA Method 6010														
Matrix: Water														
Units: mg/L														
			Environmental Samples											
		Field ID:		SS12-SW1-01				SS12-SW2-01				SS12-SW3-01		
		Batch ID:		H753				H753				H753		
Parameters	MDL		PQL	Result	Validity	Comments	PQL	Result	Validity	Comments	PQL	Result	Validity	Comments
Calcium	0.02		0.07	120	J	c	0.07	120	J	c	0.07	42	J	c
Iron	0.006		0.02	4.0		g	0.02	4.1		g	0.02	1.2		g
Magnesium	0.01		0.04	41		g	0.04	39		g	0.04	11		g
Potassium	0.2		0.5	0.6		g	0.5	0.7		g	0.5	ND	U	g
Sodium	0.07		0.2	24		g	0.2	24		g	0.2	14		g

Base: Kotzebue LRRS						Table 2.2.2							
Site: SS12						Analytical Data Summary							
Extraction Method: EPA Method 3010 (unfiltered)/3005 (filtered)						EPA Method 6010							
Analytical Method: EPA Method 6010													
Matrix: Water													
Units: mg/L													
			Environmental Samples										
		Field ID:		SS12-SW4-01									
		Batch ID:		H753									
Parameters	MDL		PQL	Result	Validity	Comments							
Calcium	0.02		0.07	18	J	c							
Iron	0.006		0.02	0.21		g							
Magnesium	0.01		0.04	5.2		g							
Potassium	0.2		0.5	ND	U	g							
Sodium	0.07		0.2	8.9		g							

Base: Kotzebue LRRS
Site: SS12
Extraction Method: EPA Method 3510
Analytical Method: EPA Method 8081
Matrix: Water
Units: ug/L

Table 2.2.3
Analytical Data Summary
EPA Method 8081

			Environmental Samples												
			Field ID:		SS12-SW1-01		SS12-SW1-01				SS12-SW2-01		SS12-SW2-01		
			Batch ID:		H686		H686				H686		H686		
	DB-5	DB-608		DB-5	DB-5	DB-608	DB-608			DB-5	DB-5	DB-608	DB-608		
Parameters	MDL	MDL		PQL	Result	PQL	Result	Validity	Comments	PQL	Result	PQL	Result	Validity	Comments
alpha BHC	0.002	0.001		0.01	0.10	0.01	ND	U	a,h	0.01	0.08	0.01	ND	U	a,h
beta BHC	0.002	0.003		0.01	0.19	0.01	0.08	J	n	0.01	0.09	0.01	0.23	J	n
delta BHC	0.002	0.002		0.01	ND	0.01	ND	U	a	0.01	ND	0.01	ND	U	a
gamma BHC (Lindane)	0.002	0.002		0.01	ND	0.01	ND	U	g	0.01	ND	0.01	ND	U	g
Heptachlor	0.004	0.004		0.01	0.05	0.01	0.06	J	n	0.01	0.05	0.01	0.14	J	n
Aldrin	0.005	0.010		0.02	0.04	0.03	0.04	J	n	0.02	0.05	0.03	0.10	J	n
Heptachlor Epoxide	0.003	0.002		0.01	0.30	0.01	0.16	J	n	0.01	0.08	0.01	ND	U	a,h
Endosulfan I	0.004	0.004		0.01	ND	0.01	ND	U	g	0.01	ND	0.01	ND	U	g
Dieldrin	0.004	0.005		0.02	0.03	0.01	0.09	J	n	0.02	0.03	0.01	0.08	J	n
4,4'-DDE	0.009	0.010		0.029	ND	0.032	ND	U	g	0.029	ND	0.032	ND	U	g
Endrin	0.004	0.004		0.014	0.015	0.012	ND	U	h	0.014	0.017	0.012	ND	U	h
Endosulfan II	0.007	0.005		0.021	ND	0.015	ND	U	a	0.021	ND	0.015	ND	U	a
4,4'-DDD	0.005	0.004		0.017	0.063	0.014	0.055	B	a	0.017	0.075	0.014	0.053	B	a
Endosulfan Sulfate	0.003	0.003		0.01	0.10	0.01	ND	U	h	0.01	0.07	0.01	0.03	J	n
4,4'-DDT	0.0010	0.008		0.031	ND	0.026	ND	U	a	0.031	ND	0.026	ND	U	a
Methoxychlor	0.038	0.035		0.12	ND	0.11	ND	U	g	0.12	ND	0.11	ND	U	g
Endrin Aldehyde	0.010	0.010		0.031	0.020	0.031	ND	U	a,h	0.031	ND	0.031	ND	U	a
gamma-Chlordane	0.003	0.003		0.01	0.02	0.01	ND	U	a,h	0.01	0.02	0.01	ND	U	a,h
alpha-Chlordane	0.003	0.004		0.01	ND	0.01	ND	U	g	0.01	ND	0.01	ND	U	g
Toxaphene	0.25	0.15		0.79	ND	0.46	ND	U	g	0.79	ND	0.46	ND	U	g
Arochlor 1016	0.3	0.3		2.5	ND	2.5	ND	U	g	2.5	ND	2.5	ND	U	g
Arochlor 1242	0.2	0.3		2.5	ND	2.5	ND	U	g	2.5	ND	2.5	ND	U	g
Arochlor 1248	0.23	0.2		0.8	ND	0.7	ND	U	g	0.8	ND	0.7	ND	U	g
Arochlor 1254	0.2	0.3		1.0	ND	1.0	ND	U	g	1.0	ND	1.0	ND	U	g
Arochlor 1260	0.3	0.3		1.0	ND	0.9	ND	U	g	1.0	ND	0.9	ND	U	g
Arochlor 1221	0.2	0.2		4.0	ND	4.0	ND	U	g	4.0	ND	4.0	ND	U	g
Arochlor 1232	0.3	0.3		2.5	ND	2.5	ND	U	g	2.5	ND	2.5	ND	U	g

Base: Kotzebue LRRS						Table 2.2.3								
Site: SS12						Analytical Data Summary								
Extraction Method: EPA Method 3510						EPA Method 8081								
Analytical Method: EPA Method 8081														
Matrix: Water														
Units: ug/L														
			Environmental Samples											
			Field ID:		SS12-SW3-01		SS12-SW3-01				SS12-SW4-01		SS12-SW4-01		
			Batch ID:		H686		H686				H686		H686		
	DB-5	DB-608		DB-5	DB-5	DB-608	DB-608			DB-5	DB-5	DB-608	DB-608		
Parameters	MDL	MDL		PQL	Result	PQL	Result	Validity	Comments	PQL	Result	PQL	Result	Validity	Comments
alpha BHC	0.002	0.001		0.01	0.05	0.01	ND	U	a,h	0.01	0.13	0.01	0.05	B J	a, n
beta BHC	0.002	0.003		0.01	0.08	0.01	0.04	J	n	0.01	ND	0.01	ND	U	g
delta BHC	0.002	0.002		0.01	0.06	0.01	ND	U	a,h	0.01	0.28	0.01	ND	U	a,h
gamma BHC (Lindane)	0.002	0.002		0.01	ND	0.01	ND	U	g	0.01	ND	0.01	ND	U	g
Heptachlor	0.004	0.004		0.01	0.01	0.01	ND	U	h	0.01	ND	0.01	ND	U	g
Aldrin	0.005	0.010		0.02	ND	0.03	ND	U	g	0.02	0.04	0.03	ND	U	h
Heptachlor Epoxide	0.003	0.002		0.01	0.12	0.01	0.05	B J	a, n	0.01	1.6	0.01	ND	U	a,h
Endosulfan I	0.004	0.004		0.01	ND	0.01	ND	U	g	0.01	0.03	0.01	ND	U	h
Dieldrin	0.004	0.005		0.02	ND	0.01	ND	U	g	0.02	ND	0.01	ND	U	g
4,4'-DDE	0.009	0.010		0.029	ND	0.032	ND	U	g	0.029	ND	0.032	ND	U	g
Endrin	0.004	0.004		0.014	ND	0.012	ND	U	g	0.014	ND	0.012	ND	U	g
Endosulfan II	0.007	0.005		0.021	0.048	0.015	ND	U	a,h	0.021	0.13	0.015	ND	U	a,h
4,4'-DDD	0.005	0.004		0.017	ND	0.014	ND	U	a	0.017	0.057	0.014	0.052	B	a
Endosulfan Sulfate	0.003	0.003		0.01	0.02	0.01	ND	U	h	0.01	ND	0.01	ND	U	g
4,4'-DDT	0.0010	0.008		0.031	ND	0.026	ND	U	a	0.031	0.094	0.026	0.19	B J	a, n
Methoxychlor	0.038	0.035		0.12	ND	0.11	ND	U	g	0.12	ND	0.11	ND	U	g
Endrin Aldehyde	0.010	0.010		0.031	0.013	0.031	ND	U	a,h	0.031	0.070	0.031	ND	U	a,h
gamma-Chlordane	0.003	0.003		0.01	0.01	0.01	ND	U	a,h	0.01	0.03	0.01	ND	U	a,h
alpha-Chlordane	0.003	0.004		0.01	ND	0.01	ND	U	g	0.01	ND	0.01	ND	U	g
Toxaphene	0.25	0.15		0.79	ND	0.46	ND	U	g	0.79	ND	0.46	ND	U	g
Arochlor 1016	0.3	0.3		0.9	ND	0.9	ND	U	g	0.9	ND	0.9	ND	U	g
Arochlor 1242	0.2	0.3		0.7	ND	1.0	ND	U	g	0.7	ND	1.0	ND	U	g
Arochlor 1248	0.23	0.2		0.8	ND	0.7	ND	U	g	0.8	ND	0.7	ND	U	g
Arochlor 1254	0.2	0.3		1.0	ND	1.0	ND	U	g	1.0	ND	1.0	ND	U	g
Arochlor 1260	0.3	0.3		1.0	ND	0.9	ND	U	g	1.0	ND	0.9	ND	U	g
Arochlor 1221	0.2	0.2		0.8	ND	0.8	ND	U	g	0.8	ND	0.8	ND	U	g
Arochlor 1232	0.3	0.3		0.8	ND	1.1	ND	U	g	0.8	ND	1.1	ND	U	g

Base: Kotzebue LRRS							Table 2.2.3							
Site: SS12							Analytical Data Summary							
Extraction Method: EPA Method 3510							EPA Method 8081							
Analytical Method: EPA Method 8081														
Matrix: Water														
Units: ug/L														
			Environmental Samples											
			Field ID:		SS12-SW5-01		SS12-SW5-01							
			Batch ID:		H859		H859							
	DB-5	DB-608		DB-5	DB-5	DB-608	DB-608							
Parameters	MDL	MDL		PQL	Result	PQL	Result	Validity	Comments					
alpha BHC	0.002	0.001		0.01	ND	0.01	ND	U	g					
beta BHC	0.002	0.003		0.01	ND	0.01	ND	U	g					
delta BHC	0.002	0.002		0.01	0.05	0.01	ND	U	h					
gamma BHC (Lindane)	0.002	0.002		0.01	ND	0.01	ND	U	g					
Heptachlor	0.004	0.004		0.01	ND	0.01	ND	U	g					
Aldrin	0.005	0.010		0.02	ND	0.03	ND	U	g					
Heptachlor Epoxide	0.003	0.002		0.01	0.01	0.01	ND	U	h					
Endosulfan I	0.004	0.004		0.01	ND	0.01	ND	U	g					
Dieldrin	0.004	0.005		0.02	ND	0.01	ND	U	g					
4,4'-DDE	0.009	0.010		0.029	ND	0.032	ND	U	g					
Endrin	0.004	0.004		0.014	ND	0.012	ND	U	g					
Endosulfan II	0.007	0.005		0.021	ND	0.015	ND	U	g					
4,4'-DDD	0.005	0.004		0.017	ND	0.014	ND	U	g					
Endosulfan Sulfate	0.003	0.003		0.01	ND	0.01	ND	U	g					
4,4'-DDT	0.0010	0.008		0.031	ND	0.026	ND	U	g					
Methoxychlor	0.038	0.035		0.12	ND	0.11	ND	U	g					
Endrin Aldehyde	0.010	0.010		0.031	ND	0.031	ND	U	g					
gamma-Chlordane	0.003	0.003		0.01	ND	0.01	ND	U	g					
alpha-Chlordane	0.003	0.004		0.01	ND	0.01	ND	U	g					
Toxaphene	0.25	0.15		0.79	ND	0.46	ND	U	g					
Arochlor 1016	0.3	0.3		0.9	ND	0.9	ND	U	g					
Arochlor 1242	0.2	0.3		0.7	ND	1.0	ND	U	g					
Arochlor 1248	0.23	0.2		0.8	ND	0.7	ND	U	g					
Arochlor 1254	0.2	0.3		1.0	ND	1.0	ND	U	g					
Arochlor 1260	0.3	0.3		1.0	ND	0.9	ND	U	g					
Arochlor 1221	0.2	0.2		0.8	ND	0.8	ND	U	g					
Arochlor 1232	0.3	0.3		0.8	ND	1.1	ND	U	g					

Base: Kotzebue LRRS						Table 2.2.4								
Site: SS12						Analytical Data Summary								
Extraction Method: EPA Method 8260						EPA Method 8260								
Analytical Method: EPA Method 8260														
Matrix: Water														
Units: ug/L														
			Environmental Samples											
		Field ID:		SS12-SW1-01				SS12-SW2-01				SS12-SW3-01		
		Batch ID:		H686				H686				H686		
Parameters	MDL		PQL	Result	Validity	Comments	PQL	Result	Validity	Comments	PQL	Result	Validity	Comments
Chloromethane	1.03		3	ND	U	g	3	ND	U	g	3	ND	U	g
Bromomethane	0.42		2	ND	U	g	2	ND	U	g	2	ND	U	g
Vinyl Chloride	0.52		2	ND	U	g	2	ND	U	g	2	ND	U	g
Chloroethane	0.59		2	ND	U	g	2	ND	U	g	2	ND	U	g
Methylene Chloride	0.41		1	ND	U	g	1	ND	U	g	1	ND	U	g
Acetone	2.90		9	17		g	9	22		g	9	ND	U	g
Carbon Disulfide	0.40		2	ND	U	g	2	ND	U	g	2	ND	U	g
1,1-Dichloroethene	0.71		2	ND	U	g	2	ND	U	g	2	ND	U	g
1,1-Dichloroethane	0.50		2	ND	U	g	2	ND	U	g	2	ND	U	g
trans-1,2-Dichloroethene	0.42		1	ND	U	g	1	ND	U	g	1	ND	U	g
cis-1,2-Dichloroethylene	0.43		2	ND	U	g	2	ND	U	g	2	ND	U	g
Chloroform	0.26		1	ND	U	g	1	ND	U	g	1	ND	U	g
1,2-Dichloroethane	0.69		2	ND	U	g	2	ND	U	g	2	ND	U	g
Methyl Ethyl Ketone (2-butanone)	0.52		2	ND	U	g	2	2		g	2	ND	U	g
1,1,1-Trichloroethane	0.54		2	ND	U	g	2	ND	U	g	2	ND	U	g
Carbon Tetrachloride	0.42		2	ND	U	g	2	ND	U	g	2	ND	U	g
Vinyl Acetate	0.52		2	ND	U	g	2	ND	U	g	2	ND	U	g
Bromodichloromethane	0.44		2	ND	U	g	2	ND	U	g	2	ND	U	g
1,2-Dichloropropane	0.48		2	ND	U	g	2	ND	U	g	2	ND	U	g
cis-1,3-Dichloropropene	0.38		1	ND	U	g	1	ND	U	g	1	ND	U	g
Trichloroethylene (tce)	0.18		1	ND	U	g	1	ND	U	g	1	ND	U	g
Dibromochloromethane	0.24		1	ND	U	g	1	ND	U	g	1	ND	U	g
1,1,2-Trichloroethane	0.42		1	ND	U	g	1	ND	U	g	1	ND	U	g
Benzene	0.42		2	ND	U	g	2	ND	U	g	2	ND	U	g

Base: Kotzebue LRRS
Site: SS12
Extraction Method: EPA Method 8260
Analytical Method: EPA Method 8260
Matrix: Water
Units: ug/L

Table 2.2.4
Analytical Data Summary
EPA Method 8260

			Environmental Samples											
		Field ID:		SS12-SW1-01				SS12-SW2-01				SS12-SW3-01		
		Batch ID:		H686				H686				H686		
Parameters	MDL		PQL	Result	Validity	Comments	PQL	Result	Validity	Comments	PQL	Result	Validity	Comments
trans-1,3-Dichloropropene	0.48		2	ND	U	g	2	ND	U	g	2	ND	U	g
2-Chloroethyl Vinyl Ether	0.82		3	ND	U	g	3	ND	U	g	3	ND	U	g
Bromoform	0.48		2	ND	U	g	2	ND	U	g	2	ND	U	g
Methyl Isobutyl Ketone	1.22		4	ND	U	g	4	ND	U	g	4	ND	U	g
2-Hexanone	0.72		2	ND	U	g	2	ND	U	g	2	ND	U	g
Tetrachloroethylene (pce)	0.30		1	ND	U	g	1	ND	U	g	1	ND	U	g
1,1,2,2-Tetrachloroethane	0.56		2	ND	U	g	2	ND	U	g	2	ND	U	g
Toluene	0.46		2	1	J		2	ND	U	g	2	1	J	
Chlorobenzene	0.20		1	ND	U	g	1	ND	U	g	1	ND	U	g
Ethylbenzene	0.28		1	ND	U	g	1	ND	U	g	1	ND	U	g
Styrene	0.08		1	ND	U	g	1	ND	U	g	1	ND	U	g
1,1,2-Trichloro-1,2,2-trifluoroethane	0.37		1	ND	U	g	1	ND	U	g	1	ND	U	g
Xylenes, total	0.68		2	ND	U	g	2	ND	U	g	2	ND	U	g
1,1,1,2-Tetrachloroethane	0.46		2	ND	U	g	2	ND	U	g	2	ND	U	g
1,2,3-Trichloropropane	0.41		1	ND	U	g	1	ND	U	g	1	ND	U	g
Bromochloromethane	0.24		1	ND	U	g	1	ND	U	g	1	ND	U	g
1-Chlorohexane	1.68		5	ND	U	g	5	ND	U	g	5	ND	U	g
Bromobenzene	0.43		2	ND	U	g	2	ND	U	g	2	ND	U	g

Base: Kotzebue LRRS						Table 2.2.4								
Site: SS12						Analytical Data Summary								
Extraction Method: EPA Method 8260						EPA Method 8260								
Analytical Method: EPA Method 8260														
Matrix: Water														
Units: ug/L														
			Environmental Samples											
		Field ID:		SS12-SW4-01										
		Batch ID:		H686										
Parameters	MDL		PQL	Result	Validity	Comments								
Chloromethane	1.03		3	ND	U	g								
Bromomethane	0.42		2	ND	U	g								
Vinyl Chloride	0.52		2	ND	U	g								
Chloroethane	0.59		2	ND	U	g								
Methylene Chloride	0.41		1	ND	U	g								
Acetone	2.90		9	ND	U	g								
Carbon Disulfide	0.40		2	ND	U	g								
1,1-Dichloroethene	0.71		2	ND	U	g								
1,1-Dichloroethane	0.50		2	ND	U	g								
trans-1,2-Dichloroethene	0.42		1	ND	U	g								
cis-1,2-Dichloroethylene	0.43		2	ND	U	g								
Chloroform	0.26		1	ND	U	g								
1,2-Dichloroethane	0.69		2	ND	U	g								
Methyl Ethyl Ketone (2-butanone)	0.52		2	ND	U	g								
1,1,1-Trichloroethane	0.54		2	ND	U	g								
Carbon Tetrachloride	0.42		2	ND	U	g								
Vinyl Acetate	0.52		2	ND	U	g								
Bromodichloromethane	0.44		2	ND	U	g								
1,2-Dichloropropane	0.48		2	ND	U	g								
cis-1,3-Dichloropropene	0.38		1	ND	U	g								
Trichloroethylene (tce)	0.18		1	ND	U	g								
Dibromochloromethane	0.24		1	ND	U	g								
1,1,2-Trichloroethane	0.42		1	ND	U	g								
Benzene	0.42		2	ND	U	g								

Base: Kotzebue LRRS						Table 2.2.4						
Site: SS12						Analytical Data Summary						
Extraction Method: EPA Method 8260						EPA Method 8260						
Analytical Method: EPA Method 8260												
Matrix: Water												
Units: ug/L												
			Environmental Samples									
		Field ID:		SS12-SW4-01								
		Batch ID:		H686								
Parameters	MDL		PQL	Result	Validity	Comments						
trans-1,3-Dichloropropene	0.48		2	ND	U	g						
2-Chloroethyl Vinyl Ether	0.82		3	ND	U	g						
Bromoform	0.48		2	ND	U	g						
Methyl Isobutyl Ketone	1.22		4	ND	U	g						
2-Hexanone	0.72		2	ND	U	g						
Tetrachloroethylene (pce)	0.30		1	ND	U	g						
1,1,2,2-Tetrachloroethane	0.56		2	ND	U	g						
Toluene	0.46		2	ND	U	g						
Chlorobenzene	0.20		1	ND	U	g						
Ethylbenzene	0.28		1	ND	U	g						
Styrene	0.08		1	ND	U	g						
1,1,2-Trichloro-1,2,2-trifluoroethane	0.37		1	ND	U	g						
Xylenes, total	0.68		2	ND	U	g						
1,1,1,2-Tetrachloroethane	0.46		2	ND	U	g						
1,2,3-Trichloropropane	0.41		1	ND	U	g						
Bromochloromethane	0.24		1	ND	U	g						
1-Chlorohexane	1.68		5	ND	U	g						
Bromobenzene	0.43		2	ND	U	g						

Base: Kotzebue LRRS						Table 2.2.4								
Site: SS12						Analytical Data Summary								
Extraction Method: EPA Method 8260						EPA Method 8260								
Analytical Method: EPA Method 8260														
Matrix: Water														
Units: ug/L														
			Environmental Samples											
		Field ID:		SS12-SW5-01										
		Batch ID:		H859										
Parameters	MDL		PQL	Result	Validity	Comments								
Chloromethane	1.03		3	ND	U	g								
Bromomethane	0.42		2	ND	U	g								
Vinyl Chloride	0.52		2	ND	U	g								
Chloroethane	0.59		2	ND	U	g								
Methylene Chloride	0.41		1	ND	U	g								
Acetone	2.90		9	ND	U	g								
Carbon Disulfide	0.40		2	ND	U	g								
1,1-Dichloroethene	0.71		2	ND	U	g								
1,1-Dichloroethane	0.50		2	ND	U	g								
trans-1,2-Dichloroethene	0.42		1	ND	U	g								
cis-1,2-Dichloroethylene	0.43		2	ND	U	g								
Chloroform	0.26		1	ND	U	g								
1,2-Dichloroethane	0.69		2	ND	U	g								
Methyl Ethyl Ketone (2-butanone)	0.52		2	ND	U	g								
1,1,1-Trichloroethane	0.54		2	ND	U	g								
Carbon Tetrachloride	0.42		2	ND	U	g								
Vinyl Acetate	0.52		2	ND	U	g								
Bromodichloromethane	0.44		2	ND	U	g								
1,2-Dichloropropane	0.48		2	ND	U	g								
cis-1,3-Dichloropropene	0.38		1	ND	U	g								
Trichloroethylene (tce)	0.18		1	ND	U	g								
Dibromochloromethane	0.24		1	ND	U	g								
1,1,2-Trichloroethane	0.42		1	ND	U	g								
Benzene	0.42		2	ND	U	g								

Base: Kotzebue LRRS						Table 2.2.4							
Site: SS12						Analytical Data Summary							
Extraction Method: EPA Method 8260						EPA Method 8260							
Analytical Method: EPA Method 8260													
Matrix: Water													
Units: ug/L													
			Environmental Samples										
		Field ID:		SS12-SW5-01									
		Batch ID:		H859									
Parameters	MDL		PQL	Result	Validity	Comments							
trans-1,3-Dichloropropene	0.48		2	ND	U	g							
2-Chloroethyl Vinyl Ether	0.82		3	ND	U	g							
Bromoform	0.48		2	ND	U	g							
Methyl Isobutyl Ketone	1.22		4	ND	U	g							
2-Hexanone	0.72		2	ND	U	g							
Tetrachloroethylene (pce)	0.30		1	ND	U	g							
1,1,2,2-Tetrachloroethane	0.56		2	ND	U	g							
Toluene	0.46		2	ND	U	g							
Chlorobenzene	0.20		1	ND	U	g							
Ethylbenzene	0.28		1	ND	U	g							
Styrene	0.08		1	ND	U	g							
1,1,2-Trichloro-1,2,2-trifluoroethane	0.37		1	ND	U	g							
Xylenes, total	0.68		2	ND	U	g							
1,1,1,2-Tetrachloroethane	0.46		2	ND	U	g							
1,2,3-Trichloropropane	0.41		1	ND	U	g							
Bromochloromethane	0.24		1	ND	U	g							
1-Chlorohexane	1.68		5	ND	U	g							
Bromobenzene	0.43		2	ND	U	g							

Base: Kotzebue LRRS
Site: SS12
Extraction Method: EPA Method 3520
Analytical Method: EPA Method 8270
Matrix: Water
Units: ug/L

Table 6.2.2.5
Analytical Data Summary
EPA Method 8270

Environmental Samples

Parameters	MDL	Field ID:	SS12-SW1-01				SS12-SW2-01				SS12-SW3-01			
		Batch ID:	H686				H686				H686			
			PQL	Result	Validity	Comments	PQL	Result	Validity	Comments	PQL	Result	Validity	Comments
Phenol	0.9		3	ND	U	g	3	ND	U	g	3	ND	U	g
bis(2-Chloroethyl) Ether	1.9		6	ND	U	g	6	ND	U	g	6	ND	U	g
2-Chlorophenol	0.2		1	ND	U	g	1	ND	U	g	1	ND	U	g
1,3-Dichlorobenzene	0.3		1	1		g	1	1		g	1	1		g
1,4-Dichlorobenzene	0.3		1	ND	U	g	1	ND	U	g	1	ND	U	g
Benzyl Alcohol	0.7		2	ND	U	g	2	ND	U	g	2	ND	U	g
1,2-Dichlorobenzene	0.2		1	ND	U	g	1	ND	U	g	1	ND	U	g
2-Methylphenol	0.2		1	ND	U	g	1	ND	U	g	1	ND	U	g
2,2'-Oxybis (1-Chloropropane)	0.2		1	ND	U	g	1	ND	U	g	1	ND	U	g
4-Methylphenol	0.6		2	ND	U	g	2	ND	U	g	2	ND	U	g
N-Nitrosodi-n-propylamine	1.3		4	ND	U	g	4	ND	U	g	4	ND	U	g
Hexachloroethane	0.6		2	ND	U	g	2	ND	U	g	2	ND	U	g
Nitrobenzene	0.3		1	ND	U	g	1	ND	U	g	1	ND	U	g
Isophorone	0.5		2	1	J		2	1	J		2	ND	U	g
2-Nitrophenol	0.5		2	ND	U	g	2	ND	U	g	2	ND	U	g
2,4-Dimethylphenol	2.6		8	ND	U	g	8	ND	U	g	8	ND	U	g
Benzoic Acid	3.1		10	ND	U	g	10	ND	U	g	10	ND	U	g
bis(2-Chloroethoxy) Methane	0.5		2	ND	U	g	2	ND	U	g	2	ND	U	g
2,4-Dichlorophenol	1.0		3	ND	U	g	3	ND	U	g	3	ND	U	g
1,2,4-Trichlorobenzene	0.2		1	ND	U	g	1	ND	U	g	1	ND	U	g
Naphthalene	0.2		1	ND	U	g	1	ND	U	g	1	ND	U	g
4-Chloroaniline	2.0		6	ND	U	g	6	ND	U	g	6	ND	U	g
Hexachlorobutadiene	0.7		2	ND	U	g	2	ND	U	g	2	ND	U	g
4-Chloro-3-Methylphenol	1.1		3	ND	U	g	3	ND	U	g	3	ND	U	g
2-Methylnaphthalene	0.6		2	ND	U	g	2	ND	U	g	2	ND	U	g
Hexachlorocyclopentadiene	2.9		9	ND	U	g	9	ND	U	g	9	ND	U	g
2,4,6-Trichlorophenol	1.5		5	ND	U	g	5	ND	U	g	5	ND	U	g
2,4,5-Trichlorophenol	1.3		4	ND	U	g	4	ND	U	g	4	ND	U	g
2-Chloronaphthalene	0.5		2	ND	U	g	2	ND	U	g	2	ND	U	g
2-Nitroaniline	1.3		4	ND	U	g	5	ND	U	g	4	ND	U	g
Dimethyl Phthalate	0.7		2	ND	U	g	2	ND	U	g	2	ND	U	g
Acenaphthylene	0.6		5	ND	U	g	2	ND	U	g	2	ND	U	g
3-Nitroaniline	5.4		20	ND	U	g	20	ND	U	g	20	ND	U	g
Acenaphthene	0.6		2	ND	U	g	2	ND	U	g	2	ND	U	g
2,4-Dinitrophenol	8.4		30	ND	U	g	30	ND	U	g	30	ND	U	g
4-Nitrophenol	1.6		6	ND	U	g	17	ND	U	g	5	ND	U	g
Dibenzofuran	0.6		4	ND	U	g	2	ND	U	g	2	ND	U	g
2,6-Dinitrotoluene	1.5		5	ND	U	g	5	ND	U	g	5	ND	U	g

Base: Kotzebue LRRS						Table 6.2.2.6								
Site: SS12						Analytical Data Summary								
Extraction Method: EPA Method 3520						EPA Method 8270								
Analytical Method: EPA Method 8270														
Matrix: Water														
Units: ug/L														
			Environmental Samples											
		Field ID:		SS12-SW1-01				SS12-SW2-01				SS12-SW3-01		
		Batch ID:		H686				H686				H686		
Parameters	MDL		PQL	Result	Validity	Comments	PQL	Result	Validity	Comments	PQL	Result	Validity	Comments
2,4-Dinitrotoluene	1.3		4	ND	U	g	4	ND	U	g	4	ND	U	g
Diethyl Phthalate	1.0		3	ND	U	g	3	ND	U	g	3	ND	U	g
4-Chlorophenyl Phenyl Ether	0.5		2	ND	U	g	2	ND	U	g	2	ND	U	g
Fluorene	0.5		2	ND	U	g	2	ND	U	g	2	ND	U	g
4-Nitroaniline	4.5		10	ND	U	g	10	ND	U	g	10	ND	U	g
4,6-Dinitro-2-Methylphenol	2.7		9	ND	U	g	9	ND	U	g	9	ND	U	g
N-Nitrosodiphenylamine	0.6		2	ND	U	g	2	ND	U	g	2	ND	U	g
4-Bromophenyl Phenyl Ether	0.6		2	ND	U	g	2	ND	U	g	2	ND	U	g
Hexachlorobenzene	0.6		2	ND	U	g	2	ND	U	g	2	ND	U	g
Pentachlorophenol	3.7		10	ND	U	g	10	ND	U	g	10	ND	U	g
Phenanthrene	0.6		2	ND	U	g	2	ND	U	g	2	ND	U	g
Anthracene	0.7		2	ND	U	g	2	ND	U	g	2	ND	U	g
di-n-butyl Phthalate	1.0		3	ND	U	g	3	ND	U	g	3	ND	U	g
Fluroanthene	0.6		2	ND	U	g	2	ND	U	g	2	ND	U	g
Pyrene	0.6		2	ND	U	g	2	ND	U	g	2	ND	U	g
Butylbenzylphthalate	0.7		2	ND	U	g	2	ND	U	g	2	ND	U	g
3,3'-Dichlorobenzidine	2.1		7	ND	U	g	7	ND	U	g	7	ND	U	g
Benzo(a)anthracene	0.6		2	ND	U	g	2	ND	U	g	2	ND	U	g
bis(2-Ethylhexyl) Phthalate	0.6		2	ND	U	g	2	ND	U	g	2	ND	U	g
Chrysene	0.6		2	ND	U	g	2	ND	U	g	2	ND	U	g
di-n-Octylphthalate	0.6		2	ND	U	g	2	ND	U	g	2	ND	U	g
Benzo(b)fluoranthene	0.6		2	ND	U	g	2	ND	U	g	2	ND	U	g
Benzo(k)fluoranthene	0.8		3	ND	U	g	3	ND	U	g	3	ND	U	g
Benzo(a)pyrene	0.7		2	ND	U	g	2	ND	U	g	2	ND	U	g
Indeno(1,2,3-c,d)pyrene	0.5		2	ND	U	g	2	ND	U	g	2	ND	U	g
Dibenzo(a,h)anthracene	0.6		2	ND	U	g	2	ND	U	g	2	ND	U	g
Benzo(g,h,i)perylene	0.5		2	ND	U	g	2	ND	U	g	2	ND	U	g

Base: Kotzebue LRRS						Table 6.2.2.6							
Site: SS12						Analytical Data Summary							
Extraction Method: EPA Method 3520						EPA Method 8270							
Analytical Method: EPA Method 8270													
Matrix: Water													
Units: ug/L													
			Environmental Samples										
		Field ID:		SS12-SW4-01									
		Batch ID:		H686									
Parameters	MDL		PQL	Result	Validity	Comments							
Phenol	0.9		3	ND	U	g							
bis(2-Chloroethyl) Ether	1.9		6	ND	U	g							
2-Chlorophenol	0.2		1	ND	U	g							
1,3-Dichlorobenzene	0.3		1	1	J								
1,4-Dichlorobenzene	0.3		1	ND	U	g							
Benzyl Alcohol	0.7		2	ND	U	g							
1,2-Dichlorobenzene	0.2		1	ND	U	g							
2-Methylphenol	0.2		1	ND	U	g							
2,2'-Oxybis (1-Chloropropane)	0.2		1	ND	U	g							
4-Methylphenol	0.6		2	ND	U	g							
N-Nitrosodi-n-propylamine	1.3		4	ND	U	g							
Hexachloroethane	0.6		2	ND	U	g							
Nitrobenzene	0.3		1	ND	U	g							
Isophorone	0.5		2	ND	U	g							
2-Nitrophenol	0.5		2	ND	U	g							
2,4-Dimethylphenol	2.6		8	ND	U	g							
Benzoic Acid	3.1		10	ND	U	g							
bis(2-Chloroethoxy) Methane	0.5		2	ND	U	g							
2,4-Dichlorophenol	1.0		3	ND	U	g							
1,2,4-Trichlorobenzene	0.2		1	ND	U	g							
Naphthalene	0.2		1	ND	U	g							
4-Chloroaniline	2.0		6	ND	U	g							
Hexachlorobutadiene	0.7		2	ND	U	g							
4-Chloro-3-Methylphenol	1.1		3	ND	U	g							
2-Methylnaphthalene	0.6		2	ND	U	g							
Hexachlorocyclopentadiene	2.9		9	ND	U	g							
2,4,6-Trichlorophenol	1.5		5	ND	U	g							
2,4,5-Trichlorophenol	1.3		4	ND	U	g							
2-Chloronaphthalene	0.5		2	ND	U	g							
2-Nitroaniline	1.3		4	ND	U	g							
Dimethyl Phthalate	0.7		2	ND	U	g							
Acenaphthylene	0.6		2	ND	U	g							
3-Nitroaniline	5.4		20	ND	U	g							
Acenaphthene	0.6		2	ND	U	g							
2,4-Dinitrophenol	8.4		30	ND	U	g							
4-Nitrophenol	1.6		5	ND	U	g							
Dibenzofuran	0.6		2	ND	U	g							
2,6-Dinitrotoluene	1.5		5	ND	U	g							

Base: Kotzebue LRRS						Table 6.2.2.5								
Site: SS12						Analytical Data Summary								
Extraction Method: EPA Method 3520						EPA Method 8270								
Analytical Method: EPA Method 8270														
Matrix: Water														
Units: ug/L														
			Environmental Samples											
		Field ID:		SS12-SW4-01										
		Batch ID:		H686										
Parameters	MDL		PQL	Result	Validity	Comments								
2,4-Dinitrotoluene	1.3		4	ND	U	g								
Diethyl Phthalate	1.0		3	ND	U	g								
4-Chlorophenyl Phenyl Ether	0.5		2	ND	U	g								
Fluorene	0.5		2	ND	U	g								
4-Nitroaniline	4.5		10	ND	U	g								
4,6-Dinitro-2-Methylphenol	2.7		9	ND	U	g								
N-Nitrosodiphenylamine	0.6		2	ND	U	g								
4-Bromophenyl Phenyl Ether	0.6		2	ND	U	g								
Hexachlorobenzene	0.6		2	ND	U	g								
Pentachlorophenol	3.7		10	ND	U	g								
Phenanthrene	0.6		2	ND	U	g								
Anthracene	0.7		2	ND	U	g								
di-n-butyl Phthalate	1.0		3	ND	U	g								
Fluroanthene	0.6		2	ND	U	g								
Pyrene	0.6		2	ND	U	g								
Butylbenzylphthalate	0.7		2	ND	U	g								
3,3'-Dichlorobenzidine	2.1		7	ND	U	g								
Benzo(a)anthracene	0.6		2	ND	U	g								
bis(2-Ethylhexyl) Phthalate	0.6		2	ND	U	g								
Chrysene	0.6		2	ND	U	g								
di-n-Octylphthalate	0.6		2	ND	U	g								
Benzo(b)fluoranthene	0.6		2	ND	U	g								
Benzo(k)fluoranthene	0.8		3	ND	U	g								
Benzo(a)pyrene	0.7		2	ND	U	g								
Indeno(1,2,3-c,d)pyrene	0.5		2	ND	U	g								
Dibenzo(a,h)anthracene	0.6		2	ND	U	g								
Benzo(g,h,i)perylene	0.5		2	ND	U	g								

Base: Kotzebue LRRS
Site: SS12
Extraction Method: EPA Method 3520
Analytical Method: EPA Method 8270
Matrix: Water
Units: ug/L

Table 6.2.2.6
Analytical Data Summary
EPA Method 8270

Environmental Samples

Field ID:		SS12-SW5-01	
Batch ID:		H859	

Parameters	MDL	PQL	Result	Validity	Comments
Phenol	0.9	3	ND	U	g
bis(2-Chloroethyl) Ether	1.9	6	ND	U	g
2-Chlorophenol	0.2	1	ND	U	g
1,3-Dichlorobenzene	0.3	1	ND	U	g
1,4-Dichlorobenzene	0.3	1	ND	U	g
Benzyl Alcohol	0.7	2	ND	U	g
1,2-Dichlorobenzene	0.2	1	ND	U	g
2-Methylphenol	0.2	1	ND	U	g
2,2'-Oxybis (1-Chloropropane)	0.2	1	ND	U	g
4-Methylphenol	0.6	2	ND	U	g
N-Nitrosodi-n-propylamine	1.3	4	ND	U	g
Hexachloroethane	0.6	2	ND	U	g
Nitrobenzene	0.3	1	ND	U	g
Isophorone	0.5	2	ND	U	g
2-Nitrophenol	0.5	2	ND	U	g
2,4-Dimethylphenol	2.6	8	ND	U	g
Benzoic Acid	3.1	10	ND	U	g
bis(2-Chloroethoxy) Methane	0.5	2	ND	U	g
2,4-Dichlorophenol	1.0	3	ND	U	g
1,2,4-Trichlorobenzene	0.2	1	ND	U	g
Naphthalene	0.2	1	ND	U	g
4-Chloroaniline	2.0	6	ND	U	g
Hexachlorobutadiene	0.7	2	ND	U	g
4-Chloro-3-Methylphenol	1.1	3	ND	U	g
2-Methylnaphthalene	0.6	2	ND	U	g
Hexachlorocyclopentadiene	2.9	9	ND	U	g
2,4,6-Trichlorophenol	1.5	5	ND	U	g
2,4,5-Trichlorophenol	1.3	4	ND	U	g
2-Chloronaphthalene	0.5	2	ND	U	g
2-Nitroaniline	1.3	4	ND	U	g
Dimethyl Phthalate	0.7	2	ND	U	g
Acenaphthylene	0.6	2	ND	U	g
3-Nitroaniline	5.4	20	ND	U	g
Acenaphthene	0.6	2	ND	U	g
2,4-Dinitrophenol	8.4	30	ND	U	g
4-Nitrophenol	1.6	5	ND	U	g
Dibenzofuran	0.6	2	ND	U	g
2,6-Dinitrotoluene	1.5	5	ND	U	g

Base: Kotzebue LRRS						Table 6.2.2.5							
Site: SS12						Analytical Data Summary							
Extraction Method: EPA Method 3520						EPA Method 8270							
Analytical Method: EPA Method 8270													
Matrix: Water													
Units: ug/L													
			Environmental Samples										
		Field ID:		SS12-SW5-01									
		Batch ID:		H859									
Parameters	MDL		PQL	Result	Validity	Comments							
2,4-Dinitrotoluene	1.3		4	ND	U	g							
Diethyl Phthalate	1.0		3	ND	U	g							
4-Chlorophenyl Phenyl Ether	0.5		2	ND	U	g							
Fluorene	0.5		2	ND	U	g							
4-Nitroaniline	4.5		10	ND	U	g							
4,6-Dinitro-2-Methylphenol	2.7		9	ND	U	g							
N-Nitrosodiphenylamine	0.6		2	ND	U	g							
4-Bromophenyl Phenyl Ether	0.6		2	ND	U	g							
Hexachlorobenzene	0.6		2	ND	U	g							
Pentachlorophenol	3.7		10	ND	U	g							
Phenanthrene	0.6		2	ND	U	g							
Anthracene	0.7		2	ND	U	g							
di-n-butyl Phthalate	1.0		3	ND	U	g							
Fluroanthene	0.6		2	ND	U	g							
Pyrene	0.6		2	ND	U	g							
Butylbenzylphthalate	0.7		2	ND	U	g							
3,3'-Dichlorobenzidine	2.1		7	ND	U	g							
Benzo(a)anthracene	0.6		2	ND	U	g							
bis(2-Ethylhexyl) Phthalate	0.6		2	1	J								
Chrysene	0.6		2	ND	U	g							
di-n-Octylphthalate	0.6		2	ND	U	g							
Benzo(b)fluoranthene	0.6		2	ND	U	g							
Benzo(k)fluoranthene	0.8		3	ND	U	g							
Benzo(a)pyrene	0.7		2	ND	U	g							
Indeno(1,2,3-c,d)pyrene	0.5		2	ND	U	g							
Dibenzo(a,h)anthracene	0.6		2	ND	U	g							
Benzo(g,h,i)perylene	0.5		2	ND	U	g							

ANALYTICAL DATA SUMMARY
SITE SS13-LANDFARM (AOC1)

Base: Kotzebue LRRS						Table 2.1.1								
Site: AOC1						Analytical Data Summary								
Extraction Method: EPA Method 3550						Method AK102								
Analytical Method: Method AK102														
Matrix: Soil														
Units: mg/kg														
			Environmental Samples											
		Field ID:		AOC1-SB1-1.5				AOC1-SB1-1.5DL				AOC1-SB10-2.0		
		Batch ID:		H569				H569				H569		
Parameters	MDL		PQL	Result	Validity	Comments	PQL	Result	Validity	Comments	PQL	Result	Validity	Comments
								Dilution 10						
Diesel Hydrocarbons	0.9		3.1	1400 E*	J	c,k,n	31	1100	J	c,k	3.0	4000 E*	J	c,k,n
AK102-Extended	NA		NA	650		g	NA	NA	NA	NA	NA	NA	NA	NA
* Analyte detected above linear calibration range.														

Base: Kotzebue LRRS						Table 2.1.1								
Site: AOC1						Analytical Data Summary								
Extraction Method: EPA Method 3550						Method AK102								
Analytical Method: Method AK102														
Matrix: Soil														
Units: mg/kg														
			Environmental Samples											
		Field ID:	AOC1-SB10-2.0DL					AOC1-SB12-3.0				AOC1-SB12-3.0DL		
		Batch ID:		H569				H569				H569		
Parameters	MDL		PQL	Result	Validity	Comments	PQL	Result	Validity	Comments	PQL	Result	Validity	Comments
				Dilution 20								Dilution 10		
Diesel Hydrocarbons	0.9		61	4100	J	c,k	3.2	2100 E*	J	c,k,n	32	1500	J	c,k
* Analyte detected above linear calibration range.														

Base: Kotzebue LRRS						Table 2.1.1								
Site: AOC1						Analytical Data Summary								
Extraction Method: EPA Method 3550						Method AK102								
Analytical Method: Method AK102														
Matrix: Soil														
Units: mg/kg														
			Environmental Samples											
		Field ID:		AOC1-SB2-1.0				AOC1-SB2-1.0DL				AOC1-SB3-2.0		
		Batch ID:		H569				H569				H569		
Parameters	MDL		PQL	Result	Validity	Comments	PQL	Result	Validity	Comments	PQL	Result	Validity	Comments
								Dilution 10						
Diesel Hydrocarbons	0.9		3.0	720 E*	J	c,k,n	30	520	J	c,k	3.1	4600 E*	J	c,k,n
AK102-Extended	NA		NA	NA	NA	NA	NA	NA	NA	NA	NA	580		g
* Analyte detected above linear calibration range.														

Base: Kotzebue LRRS						Table 2.1.1								
Site: AOC1						Analytical Data Summary								
Extraction Method: EPA Method 3550						Method AK102								
Analytical Method: Method AK102														
Matrix: Soil														
Units: mg/kg														
			Environmental Samples											
		Field ID:		AOC1-SB3-2.0DL				AOC1-SB4-2.0				AOC1-SB4-2.0DL		
		Batch ID:		H569				H569				H569		
Parameters	MDL		PQL	Result	Validity	Comments	PQL	Result	Validity	Comments	PQL	Result	Validity	Comments
				Dilution 50								Dilution 10		
Diesel Hydrocarbons	0.9		160	5100	J	c,k	3.1	3100 E*	J	c,k,n	31	3400	J	c,k
* Analyte detected above linear calibration range.														

Base: Kotzebue LRRS						Table 2.1.1								
Site: AOC1						Analytical Data Summary								
Extraction Method: EPA Method 3550						Method AK102								
Analytical Method: Method AK102														
Matrix: Soil														
Units: mg/kg														
			Environmental Samples											
		Field ID:		AOC1-SB5-3.5				AOC1-SB6-4.0				AOC1-SB7-1.5		
		Batch ID:		H569				H569				H569		
Parameters	MDL		PQL	Result	Validity	Comments	PQL	Result	Validity	Comments	PQL	Result	Validity	Comments
Diesel Hydrocarbons	0.9		3.0	180	J	c,k	2.9	38	J	c,k	3.0	5.0	J	c,k

Base: Kotzebue LRRS				Table 2.1.1										
Site: AOC1				Analytical Data Summary										
Extraction Method: EPA Method 3550				Method AK102										
Analytical Method: Method AK102														
Matrix: Soil														
Units: mg/kg														
			Environmental Samples											
		Field ID:		AOC1-SB8-1.0				AOC1-SB9-1.0				AOC1-SB9-1.0DL		
		Batch ID:		H569				H569				H569		
Parameters	MDL		PQL	Result	Validity	Comments	PQL	Result	Validity	Comments	PQL	Result	Validity	Comments
												Dilution 10		
Diesel Hydrocarbons	0.9		3.0	1.7	J	c,k	3.1	2000 E*	J	c,k,n	31	2400	J	c,k
* Analyte detected above linear calibration range.														

Base: Kotzebue LRRS				Table 2.1.1										
Site: AOC1				Analytical Data Summary										
Extraction Method: EPA Method 3550				Method AK102										
Analytical Method: Method AK102														
Matrix: Soil														
Units: mg/kg														
			Environmental Samples											
		Field ID:		AOC1-SB11-3.5				AOC1-SB11-3.5DL				AOC1-SB12-0.75		
		Batch ID:		H834				H834				H834		
Parameters	MDL		PQL	Result	Validity	Comments	PQL	Result	Validity	Comments	PQL	Result	Validity	Comments
								Dilution 10						
Diesel Hydrocarbons	3.9		8.8	3800 E*	J	n	88	4800		g	12	520		g
* Analyte detected above linear calibration range.														

Base: Kotzebue LRRS						Table 2.1.2								
Site: AOC1						Analytical Data Summary								
Extraction Method: EPA Method 3050						EPA Method 6010								
Analytical Method: EPA Method 6010														
Matrix: Soil														
Units: mg/kg														
			Environmental Samples											
		Field ID:		AOC1-SB10-2.0				AOC1-SB2-1.0				AOC1-SB4-2.0		
		Batch ID:		H569				H569				H569		
Parameters	MDL		PQL	Result	Validity	Comments	PQL	Result	Validity	Comments	PQL	Result	Validity	Comments
Aluminum	1.0		3	8900		a,k	3	10000		a,k	3	12000		a,k
Antimony	3		10	ND	UJ	c	10	4	J	c	10	ND	UJ	c
Arsenic	3		10	7	J		10	9	J		10	8	J	
Barium	0.5		1	120		g	2	140		g	1	150		g
Beryllium	0.02		0.1	0.1		g	0.1	0.2		g	0.1	0.1		g
Cadmium	0.6		2	ND	U	g	2	ND	U	g	2	ND	U	g
Calcium	2.3		7	26000		k	7	27000		k	7	30000		k
Chromium, total	0.20		0.7	20		g	0.7	17		g	0.6	22		g
Cobalt	0.3		1	7		g	1	7		g	1	8		g
Copper	0.08		0.3	12		k	0.3	13		k	0.3	14		k
Iron	0.6		2	14000		g	2	17000		g	2	19000		g
Magnesium	1.4		5	9900		g	5	11000		g	5	12000		g
Manganese	0.3		1	310		g	1	300		g	1	330		g
Molybdenum	0.23		0.7	ND	U	g	0.8	ND	U	g	0.7	ND	U	g
Nickel	0.6		2	33		g	2	31		g	2	37		g
Potassium	17		50	450		g	50	660		g	50	750		g
Selenium	3		10	9	J		10	6	J		10	6	J	
Silver	0.13		0.4	ND	U	g	0.4	ND	U	g	0.4	ND	U	g
Sodium	7		20	230		a,k	20	160		a,k	20	310		a,k
Thallium	1.4		4	10		g	4	10		g	4	11		g
Vanadium	0.13		0.4	25	J	c	0.4	30	J	c	0.4	39	J	c
Zinc	0.24		0.8	41		k	0.9	46		k	0.8	61		k

Base: Kotzebue LRRS						Table 2.1.2								
Site: AOC1						Analytical Data Summary								
Extraction Method: EPA Method 3050						EPA Method 6010								
Analytical Method: EPA Method 6010														
Matrix: Soil														
Units: mg/kg														
			Environmental Samples											
		Field ID:		AOC1-SB7-1.5										
		Batch ID:		H569										
Parameters	MDL		PQL	Result	Validity	Comments								
Aluminum	1.1		3	8900		a,k								
Antimony	4		10	ND	UJ	c								
Arsenic	3		10	8	J									
Barium	0.5		2	95		g								
Beryllium	0.02		0.1	0.1		g								
Cadmium	0.6		2	ND	U	g								
Calcium	2.4		8	29000		k								
Chromium, total	0.21		0.7	14		g								
Cobalt	0.3		1	7		g								
Copper	0.09		0.3	12		k								
Iron	0.6		2	15000		g								
Magnesium	1.5		5	9500		g								
Manganese	0.4		1	210		g								
Molybdenum	0.24		0.8	ND	U	g								
Nickel	0.6		2	26		g								
Potassium	17		60	330		g								
Selenium	4		10	4	J									
Silver	0.14		0.4	ND	U	g								
Sodium	7		20	160		a,k								
Thallium	1.4		5	11		g								
Vanadium	0.14		0.4	34	J	c								
Zinc	0.25		0.9	62		k								

Base: Kotzebue LRRS						Table 2.1.3									
Site: AOC1						Analytical Data Summary									
Extraction Method: See below						EPA Method 7000									
Analytical Method: See below															
Matrix: Soil															
Units: mg/kg															
				Environmental Samples											
			Field ID:		AOC1-SB10-2.0				AOC1-SB2-1.0				AOC1-SB4-2.0		
	EPA		Batch ID:		H569				H569				H569		
Parameters	Method	MDL		PQL	Result	Validity	Comments	PQL	Result	Validity	Comments	PQL	Result	Validity	Comments
Lead	3050/7421	0.13		0.4	21*	J	c,k	0.4	8.7**	J	c,k	0.4	16*	J	c,k
Mercury	7471	0.009		0.03	0.02	B J	a,b	0.02	0.03	B	a	0.03	0.04	B	a
* Sample diluted at a factor of 20.00															
** Sample diluted at a factor of 5.00															

Base: Kotzebue LRRS						Table 2.1.3		
Site: AOC1						Analytical Data Summary		
Extraction Method: See below						EPA Method 7000		
Analytical Method: See below								
Matrix: Soil								
Units: mg/kg								
				Environmental Samples				
			Field ID:		AOC1-SB7-1.5			
	EPA		Batch ID:		H569			
Parameters	Method	MDL		PQL	Result	Validity	Comments	
Lead	3050/7421	0.13		0.4	5.5**	J	c,k	
Mercury	7471	0.008		0.03	0.03	B	a	
** Sample diluted at a factor of 5.00								

Base: Kotzebue LRRS						Table 2.1.5								
Site: AOC1						Analytical Data Summary								
Extraction Method: EPA Method 8260						EPA Method 8260								
Analytical Method: EPA Method 8260														
Matrix: Soil														
Units: mg/kg														
			Environmental Samples											
		Field ID:		AOC1-SB1-1.5				AOC1-SB10-2.0				AOC1-SB10-2.0**		
		Batch ID:		H569				H569				H569		
Parameters	MDL		PQL	Result	Validity	Comments	PQL	Result	Validity	Comments	PQL	Result	Validity	Comments
Chloromethane	0.0009		0.003	ND	U	g	0.023	ND	U	g	0.37	ND	U	g
Bromomethane	0.0008		0.003	ND	U	g	0.021	ND	U	g	0.34	ND	U	g
Vinyl Chloride	0.0010		0.003	ND	U	g	0.025	ND	U	g	0.40	ND	U	g
Chloroethane	0.0010		0.003	ND	U	g	0.026	ND	U	g	0.42	ND	U	g
Methylene Chloride	0.0009		0.003	0.002	B J	a	0.022	ND	U	g	0.36	0.28	B J	a
Acetone	0.0039		0.01	ND	U	k	0.10	0.12*		k	1.6	0.72	J	k
Carbon Disulfide	0.0005		0.002	ND	U	g	0.014	ND	U	g	0.22	ND	U	g
1,1-Dichloroethene	0.0012		0.004	ND	U	g	0.030	ND	U	g	0.48	ND	U	g
1,1-Dichloroethane	0.0004		0.001	ND	U	g	0.009	ND	U	g	0.15	ND	U	g
trans-1,2-Dichloroethene	0.0009		0.003	ND	U	g	0.023	ND	U	g	0.37	ND	U	g
cis-1,2-Dichloroethylene	0.0011		0.004	ND	U	g	0.029	ND	U	g	0.47	ND	U	g
Chloroform	0.0005		0.001	ND	U	k	0.012	ND	U	k	0.19	ND	U	k
1,2-Dichloroethane	0.0005		0.002	ND	U	g	0.013	ND	U	g	0.21	ND	U	g
Methyl Ethyl Ketone (2-butanone)	0.0025		0.008	ND	U	k	0.064	ND	U	k	1.0	ND	U	k
1,1,1-Trichloroethane	0.0004		0.001	ND	U	g	0.011	ND	U	g	0.18	ND	U	g
Carbon Tetrachloride	0.0010		0.003	ND	U	g	0.025	ND	U	g	0.41	ND	U	g
Vinyl Acetate	0.0016		0.005	ND	U	g	0.042	ND	U	g	0.67	ND	U	g
Bromodichloromethane	0.0006		0.002	ND	U	g	0.017	ND	U	g	0.27	ND	U	g
1,2-Dichloropropane	0.0008		0.003	ND	U	g	0.022	ND	U	g	0.35	ND	U	g
cis-1,3-Dichloropropene	0.0007		0.002	ND	U	g	0.018	ND	U	g	0.29	ND	U	g
Trichloroethylene (tce)	0.0005		0.002	ND	U	g	0.014	ND	U	g	0.22	ND	U	g
Dibromochloromethane	0.0003		0.001	ND	U	g	0.009	ND	U	g	0.14	ND	U	g
1,1,2-Trichloroethane	0.0007		0.002	ND	U	g	0.018	ND	U	g	0.29	ND	U	g
Benzene	0.0005		0.0015	ND	U	g	0.012	ND	U	g	0.20	ND	U	g

* In the opinion of the analyst, the relevant compound may not be present at or below the indicated concentration due to interfering background contamination that prevents a positive or negative spectral confirmation.

** Reanalyzed.

Base: Kotzebue LRRS							Table 2.1.4								
Site: AOC1							Analytical Data Summary								
Extraction Method: EPA Method 3550							EPA Method 8081								
Analytical Method: EPA Method 8081															
Matrix: Soil															
Units: mg/kg															
				Environmental Samples											
			Field ID:		AOC1-SB1-1.5		AOC1-SB1-1.5				AOC1-SB1-1.5DL		AOC1-SB1-1.5DL		
			Batch ID:		H569		H569				H569		H569		
	DB-5	DB-608		DB-5	DB-5	DB-608	DB-608			DB-5	DB-5	DB-608	DB-608		
Parameters	MDL	MDL		PQL	Result	PQL	Result	Validity	Comments	PQL	Result Dilution 50	PQL	Result Dilution 50	Validity	Comments
alpha BHC	0.0001	0.0001		0.00022	ND	0.00020	ND	U	g	0.011	ND	0.010	ND	U	g
beta BHC	0.0001	0.0001		0.00034	0.0013	0.00032	ND	U	h	0.017	ND	0.016	ND	U	g
delta BHC	0.0001	0.0001		0.00035	0.0033	0.00026	0.0021		g	0.018	ND	0.013	ND	U	g
gamma BHC (Lindane)	0.0001	0.0001		0.00028	ND	0.00023	ND	U	g	0.014	ND	0.011	ND	U	g
Heptachlor	0.0001	0.0001		0.0003	ND	0.0003	ND	U	g	0.016	ND	0.016	ND	U	g
Aldrin	0.0001	0.0001		0.00022	ND	0.00028	ND	U	g	0.011	0.015	0.014	ND	U	h
Heptachlor Epoxide	0.0001	0.0001		0.00028	0.016	0.00035	0.00063	J	k,n	0.014	ND	0.018	ND	U	k
Endosulfan I	0.0001	0.0001		0.00040	0.0032	0.00040	0.0013	J	n	0.020	ND	0.020	ND	U	g
Dieldrin	0.0001	0.0002		0.0004	ND	0.0005	ND	U	g	0.022	ND	0.027	ND	U	g
4,4'-DDE	0.0001	0.0002		0.0004	0.021	0.0005	0.020		g	0.018	0.087	0.026	ND	U	h
Endrin	0.0001	0.0001		0.0004	0.0046	0.0004	0.0050		g	0.018	0.011	0.018	ND	U	h
Endosulfan II	0.0002	0.0002		0.0006	ND	0.0006	ND	U	g	0.029	ND	0.028	ND	U	g
4,4'-DDD	0.0001	0.0001		0.0004	0.79 E*	0.0005	0.77 E*	J	n	0.022	0.24	0.026	0.22		g
Endosulfan Sulfate	0.0002	0.0002		0.0009	ND	0.0009	ND	U	g	0.044	ND	0.044	ND	U	g
4,4'-DDT	0.0002	0.0001		0.0008	0.013	0.0005	0.013		g	0.041	ND	0.023	ND	U	g
Methoxychlor	0.0008	0.0011		0.0031	ND	0.0038	ND	U	g	0.15	ND	0.19	ND	U	g
Endrin Aldehyde	0.0002	0.0003		0.0008	ND	0.0009	ND	U	g	0.040	ND	0.047	ND	U	g
gamma-Chlordane	0.0001	0.0001		0.00019	ND	0.00028	ND	U	g	0.0096	ND	0.014	ND	U	g
alpha-Chlordane	0.0001	0.0001		0.00022	ND	0.00040	ND	U	g	0.011	ND	0.020	ND	U	g
Toxaphene	0.007	0.009		0.03	ND	0.03	ND	U	g	1.3	ND	1.6	ND	U	g
Arochlor 1016	0.009	0.009		0.03	ND	0.03	ND	U	g	1.6	ND	1.5	ND	U	g
Arochlor 1242	0.005	0.008		0.02	ND	0.03	ND	U	g	0.96	ND	1.4	ND	U	g
Arochlor 1248	0.004	0.005		0.01	ND	0.02	ND	U	g	0.63	ND	0.85	ND	U	g
Arochlor 1254	0.011	0.009		0.04	ND	0.03	ND	U	g	1.9	ND	1.6	ND	U	g
Arochlor 1260	0.009	0.010		0.03	ND	0.02	ND	U	g	1.5	ND	0.81	ND	U	g
Arochlor 1221	0.011	0.010		0.04	ND	0.03	ND	U	g	1.9	ND	1.7	ND	U	g
Arochlor 1232	0.005	0.005		0.02	ND	0.00	ND	U	g	0.81	ND	0.08	ND	U	g
*Analyte detected above linear calibration range.															

Base: Kotzebue LRRS						Table 2.1.4									
Site: AOC1						Analytical Data Summary									
Extraction Method: EPA Method 3550						EPA Method 8081									
Analytical Method: EPA Method 8081															
Matrix: Soil															
Units: mg/kg															
				Environmental Samples											
			Field ID:		AOC1-SB10-2.0		AOC1-SB10-2.0				AOC1-SB10-2.0DL		AOC1-SB10-2.0DL		
			Batch ID:		H569		H569				H569		H569		
	DB-5	DB-608		DB-5	DB-5	DB-608	DB-608			DB-5	DB-5	DB-608	DB-608		
Parameters	MDL	MDL		PQL	Result	PQL	Result	Validity	Comments	PQL	Result Dilution 20	PQL	Result Dilution 20	Validity	Comments
alpha BHC	0.0001	0.0001		0.00022	ND	0.00020	ND	U	g	0.0044	0.031	0.0039	ND	U	h
beta BHC	0.0001	0.0001		0.00033	0.0022	0.00031	ND	U	h	0.0067	ND	0.0062	ND	U	g
delta BHC	0.0001	0.0001		0.00034	0.0032	0.00026	0.0014	J	n	0.0069	0.11	0.0051	ND	U	h
gamma BHC (Lindane)	0.0001	0.0001		0.00027	0.00091	0.00022	0.0015	J	n	0.0054	ND	0.0045	ND	U	g
Heptachlor	0.0001	0.0001		0.0003	ND	0.0003	ND	U	g	0.0062	ND	0.0061	ND	U	g
Aldrin	0.0001	0.0001		0.00022	ND	0.00028	ND	U	g	0.0043	ND	0.0056	ND	U	g
Heptachlor Epoxide	0.0001	0.0001		0.00027	0.16	0.00034	ND	U	h,k	0.0054	0.28	0.0069	ND	U	h,k
Endosulfan I	0.0001	0.0001		0.00040	ND	0.00040	ND	U	g	0.0079	ND	0.0079	ND	U	g
Dieldrin	0.0001	0.0002		0.0004	ND	0.0005	ND	U	g	0.0085	ND	0.010	ND	U	g
4,4'-DDE	0.0001	0.0002		0.0003	0.0096	0.0005	0.011		g	0.0070	0.040	0.010	0.043		g
Endrin	0.0001	0.0001		0.0003	0.0018	0.0004	0.0032		g	0.0069	ND	0.0072	ND	U	g
Endosulfan II	0.0002	0.0002		0.0006	ND	0.0006	ND	U	g	0.011	0.0087	0.011	ND	U	h
4,4'-DDD	0.0001	0.0001		0.0004	0.31 E*	0.0005	0.30 E*	J	n	0.0085	0.20	0.010	0.19		g
Endosulfan Sulfate	0.0002	0.0002		0.0009	ND	0.0009	ND	U	g	0.017	ND	0.017	ND	U	g
4,4'-DDT	0.0002	0.0001		0.0008	0.012	0.0005	0.011		g	0.016	0.030	0.0092	0.028		g
Methoxychlor	0.0008	0.0011		0.0030	ND	0.0038	ND	U	g	0.060	ND	0.076	ND	U	g
Endrin Aldehyde	0.0002	0.0003		0.0008	ND	0.0009	ND	U	g	0.016	ND	0.018	ND	U	g
gamma-Chlordane	0.0001	0.0001		0.00019	0.00058	0.00028	0.0016	J	n	0.0038	ND	0.0056	ND	U	g
alpha-Chlordane	0.0001	0.0001		0.00022	0.00044	0.00040	0.0017	J	n	0.0044	ND	0.0079	ND	U	g
Toxaphene	0.007	0.009		0.03	ND	0.03	ND	U	g	0.52	ND	0.63	ND	U	g
Arochlor 1016	0.009	0.009		0.03	ND	0.03	ND	U	g	0.62	ND	0.60	ND	U	g
Arochlor 1242	0.005	0.008		0.02	ND	0.03	ND	U	g	0.38	ND	0.53	ND	U	g
Arochlor 1248	0.004	0.005		0.01	ND	0.02	ND	U	g	0.25	ND	0.33	ND	U	g
Arochlor 1254	0.011	0.009		0.04	ND	0.03	ND	U	g	0.74	ND	0.64	ND	U	g
Arochlor 1260	0.009	0.010		0.03	ND	0.02	ND	U	g	0.60	ND	0.32	ND	U	g
Arochlor 1221	0.011	0.010		0.04	ND	0.03	ND	U	g	0.74	ND	0.66	ND	U	g
Arochlor 1232	0.005	0.005		0.02	ND	0.00	ND	U	g	0.32	ND	0.32	ND	U	g

Base: Kotzebue LRRS
Site: AOC1
Extraction Method: EPA Method 3550
Analytical Method: EPA Method 8081
Matrix: Soil
Units: mg/kg

Table 2.1.4
Analytical Data Summary
EPA Method 8081

				Environmental Samples											
			Field ID:		AOC1-SB12-3.0		AOC1-SB12-3.0				AOC1-SB2-1.0		AOC1-SB2-1.0		
			Batch ID:		H569		H569				H569		H569		
	DB-5	DB-608		DB-5	DB-5	DB-608	DB-608			DB-5	DB-5	DB-608	DB-608		
Parameters	MDL	MDL		PQL	Result	PQL	Result	Validity	Comments	PQL	Result	PQL	Result	Validity	Comments
alpha BHC	0.0001	0.0001		0.00022	0.0020	0.00020	0.0041	J	n	0.00022	ND	0.00019	ND	U	g
beta BHC	0.0001	0.0001		0.00034	0.0074	0.00032	0.0013	J	n	0.00033	0.0011	0.00030	ND	U	h
delta BHC	0.0001	0.0001		0.00035	0.016	0.00026	ND	U	h	0.00034	0.0022	0.00025	0.0014	J	n
gamma BHC (Lindane)	0.0001	0.0001		0.00028	0.0024	0.00023	0.0038	J	n	0.00026	ND	0.00022	ND	U	g
Heptachlor	0.0001	0.0001		0.0003	ND	0.0003	ND	U	g	0.0003	ND	0.0003	ND	U	g
Aldrin	0.0001	0.0001		0.00022	0.0089	0.00028	0.0019	J	n	0.00021	ND	0.00027	ND	U	g
Heptachlor Epoxide	0.0001	0.0001		0.00028	0.054	0.00035	0.00041	J	k,n	0.00026	0.0078	0.00034	0.00018	J	k,n
Endosulfan I	0.0001	0.0001		0.00040	ND	0.00040	ND	U	g	0.00039	0.0014	0.00039	ND	U	h
Dieldrin	0.0001	0.0002		0.0004	ND	0.0005	ND	U	g	0.0004	ND	0.0005	ND	U	g
4,4'-DDE	0.0001	0.0002		0.0004	0.0048	0.0005	0.0068		g	0.0003	0.0089	0.0005	0.0089		g
Endrin	0.0001	0.0001		0.0004	0.0012	0.0004	0.0017		g	0.0003	0.0020	0.0004	0.0030		g
Endosulfan II	0.0002	0.0002		0.0006	ND	0.0006	ND	U	g	0.0006	ND	0.0005	ND	U	g
4,4'-DDD	0.0001	0.0001		0.0004	0.061	0.0005	0.056		g	0.0004	0.34 E*	0.0005	0.33 E*	J	n
Endosulfan Sulfate	0.0002	0.0002		0.0009	ND	0.0009	ND	U	g	0.0008	ND	0.0008	ND	U	g
4,4'-DDT	0.0002	0.0001		0.0008	0.0080	0.0005	0.0032	J	n	0.0008	0.0089	0.0004	0.0097		g
Methoxychlor	0.0008	0.0011		0.0030	ND	0.0038	ND	U	g	0.0029	ND	0.0037	ND	U	g
Endrin Aldehyde	0.0002	0.0003		0.0008	0.046	0.0009	ND	U	h	0.0008	0.0020	0.0009	ND	U	h
gamma-Chlordane	0.0001	0.0001		0.00019	ND	0.00028	ND	U	g	0.00018	ND	0.00027	ND	U	g
alpha-Chlordane	0.0001	0.0001		0.00022	ND	0.00040	ND	U	g	0.00022	ND	0.00039	ND	U	g
Toxaphene	0.007	0.009		0.03	ND	0.03	ND	U	g	0.03	ND	0.03	ND	U	g
Arochlor 1016	0.009	0.009		0.03	ND	0.03	ND	U	g	0.03	ND	0.03	ND	U	g
Arochlor 1242	0.005	0.008		0.02	ND	0.03	ND	U	g	0.02	ND	0.03	ND	U	g
Arochlor 1248	0.004	0.005		0.01	ND	0.02	ND	U	g	0.01	ND	0.02	ND	U	g
Arochlor 1254	0.011	0.009		0.04	ND	0.03	ND	U	g	0.04	ND	0.03	ND	U	g
Arochlor 1260	0.009	0.010		0.03	ND	0.02	ND	U	g	0.03	ND	0.02	ND	U	g
Arochlor 1221	0.011	0.010		0.04	ND	0.03	ND	U	g	0.04	ND	0.03	ND	U	g
Arochlor 1232	0.005	0.005		0.02	ND	0.00	ND	U	g	0.02	ND	0.00	ND	U	g

Base: Kotzebue LRRS						Table 2.1.4									
Site: AOC1						Analytical Data Summary									
Extraction Method: EPA Method 3550						EPA Method 8081									
Analytical Method: EPA Method 8081															
Matrix: Soil															
Units: mg/kg															
				Environmental Samples											
			Field ID:	AOC1-SB2-1.0DL		AOC1-SB2-1.0DL					AOC1-SB4-2.0		AOC1-SB4-2.0		
			Batch ID:		H569		H569				H569		H569		
	DB-5	DB-608		DB-5	DB-5	DB-608	DB-608			DB-5	DB-5	DB-608	DB-608		
Parameters	MDL	MDL		PQL	Result	PQL	Result	Validity	Comments	PQL	Result	PQL	Result	Validity	Comments
					Dilution 20		Dilution 20								
alpha BHC	0.0001	0.0001		0.0043	ND	0.0038	ND	U	g	0.00022	ND	0.00020	ND	U	g
beta BHC	0.0001	0.0001		0.0065	ND	0.0061	ND	U	g	0.00034	0.0015	0.00031	0.00051	J	n
delta BHC	0.0001	0.0001		0.0067	ND	0.0050	ND	U	g	0.00035	0.0026	0.00026	0.0031	J	n
gamma BHC (Lindane)	0.0001	0.0001		0.0053	ND	0.0044	ND	U	g	0.00027	0.0012	0.00023	ND	U	h
Heptachlor	0.0001	0.0001		0.0060	ND	0.0060	ND	U	g	0.0003	ND	0.0003	ND	U	g
Aldrin	0.0001	0.0001		0.0042	ND	0.0054	ND	U	g	0.00022	ND	0.00028	ND	U	g
Heptachlor Epoxide	0.0001	0.0001		0.0053	0.0085	0.0067	ND	U	h,k	0.00027	0.011	0.00035	0.00040	J	k,n
Endosulfan I	0.0001	0.0001		0.0077	ND	0.0077	ND	U	g	0.00040	0.0016	0.00040	ND	U	h
Dieldrin	0.0001	0.0002		0.0082	ND	0.010	ND	U	g	0.0004	ND	0.0005	ND	U	g
4,4'-DDE	0.0001	0.0002		0.0068	0.038	0.010	0.028		g	0.0004	0.013	0.0005	0.013		g
Endrin	0.0001	0.0001		0.0068	0.0050	0.0070	ND	U	h	0.0003	0.0025	0.0004	0.0027		g
Endosulfan II	0.0002	0.0002		0.011	ND	0.011	ND	U	g	0.0006	ND	0.0006	ND	U	g
4,4'-DDD	0.0001	0.0001		0.0082	0.21	0.0098	0.20		g	0.0004	0.42 E*	0.0005	0.43 E*	J	n
Endosulfan Sulfate	0.0002	0.0002		0.017	ND	0.017	ND	U	g	0.0009	ND	0.0009	ND	U	g
4,4'-DDT	0.0002	0.0001		0.016	0.020	0.0090	0.011	J	n	0.0008	0.076 E*	0.0005	0.068 E*	J	n
Methoxychlor	0.0008	0.0011		0.058	ND	0.074	ND	U	g	0.0030	ND	0.0038	ND	U	g
Endrin Aldehyde	0.0002	0.0003		0.015	ND	0.018	ND	U	g	0.0008	0.0018	0.0009	ND	U	h
gamma-Chlordane	0.0001	0.0001		0.0037	ND	0.0054	ND	U	g	0.00019	0.0011	0.00028	ND	U	h
alpha-Chlordane	0.0001	0.0001		0.0043	ND	0.0077	ND	U	g	0.00022	ND	0.00040	ND	U	g
Toxaphene	0.007	0.009		0.50	ND	0.62	ND	U	g	0.03	ND	0.03	ND	U	g
Arochlor 1016	0.009	0.009		0.60	ND	0.58	ND	U	g	0.03	ND	0.03	ND	U	g
Arochlor 1242	0.005	0.008		0.37	ND	0.52	ND	U	g	0.02	ND	0.03	ND	U	g
Arochlor 1248	0.004	0.005		0.24	ND	0.32	ND	U	g	0.01	ND	0.02	ND	U	g
Arochlor 1254	0.011	0.009		0.73	ND	0.62	ND	U	g	0.04	ND	0.03	ND	U	g
Arochlor 1260	0.009	0.010		0.59	ND	0.31	ND	U	g	0.03	ND	0.02	ND	U	g
Arochlor 1221	0.011	0.010		0.72	ND	0.65	ND	U	g	0.04	ND	0.03	ND	U	g
Arochlor 1232	0.005	0.005		0.31	ND	0.03	ND	U	g	0.02	ND	0.00	ND	U	g

Base: Kotzebue LRRS							Table 2.1.4								
Site: AOC1							Analytical Data Summary								
Extraction Method: EPA Method 3550							EPA Method 8081								
Analytical Method: EPA Method 8081															
Matrix: Soil															
Units: mg/kg															
				Environmental Samples											
			Field ID:	AOC1-SB4-2.0DL		AOC1-SB4-2.0DL					AOC1-SB7-1.5		AOC1-SB7-1.5		
			Batch ID:	H569		H569					H569		H569		
	DB-5	DB-608	DB-5	DB-5	DB-608	DB-608				DB-5	DB-5	DB-608	DB-608		
Parameters	MDL	MDL	PQL	Result	PQL	Result	Validity	Comments		PQL	Result	PQL	Result	Validity	Comments
				Dilution 20		Dilution 20									
alpha BHC	0.0001	0.0001	0.0045	ND	0.0040	ND	U	g		0.00022	0.0014	0.00020	ND	U	h
beta BHC	0.0001	0.0001	0.0067	ND	0.0063	ND	U	g		0.00034	0.0015	0.00031	ND	U	h
delta BHC	0.0001	0.0001	0.0069	ND	0.0052	ND	U	g		0.00034	0.013	0.00026	0.0012	J	n
gamma BHC (Lindane)	0.0001	0.0001	0.0055	ND	0.0045	ND	U	g		0.00027	ND	0.00023	ND	U	g
Heptachlor	0.0001	0.0001	0.0062	ND	0.0062	ND	U	g		0.0003	ND	0.0003	ND	U	g
Aldrin	0.0001	0.0001	0.0044	ND	0.0056	ND	U	g		0.00022	ND	0.00028	ND	U	g
Heptachlor Epoxide	0.0001	0.0001	0.0055	0.024	0.0069	ND	U	h,k		0.00027	0.058	0.00034	ND	U	h,k
Endosulfan I	0.0001	0.0001	0.0080	ND	0.0080	ND	U	g		0.00040	ND	0.00040	ND	U	g
Dieldrin	0.0001	0.0002	0.0085	ND	0.011	ND	U	g		0.0004	ND	0.0005	ND	U	g
4,4'-DDE	0.0001	0.0002	0.0070	0.048	0.010	0.036		g		0.0004	0.0022	0.0005	0.0016		g
Endrin	0.0001	0.0001	0.0070	0.0081	0.0072	ND	U	h		0.0003	0.0081	0.0004	ND	U	h
Endosulfan II	0.0002	0.0002	0.011	0.035	0.01	ND	U	h		0.0006	ND	0.0006	ND	U	g
4,4'-DDD	0.0001	0.0001	0.0085	0.31	0.010	0.30		g		0.0004	0.010	0.0005	0.011		g
Endosulfan Sulfate	0.0002	0.0002	0.017	ND	0.017	ND	U	g		0.0009	ND	0.0009	ND	U	g
4,4'-DDT	0.0002	0.0001	0.016	0.082	0.0093	0.066		g		0.0008	0.0064	0.0005	0.0051		g
Methoxychlor	0.0008	0.0011	0.060	ND	0.076	ND	U	g		0.0030	ND	0.0038	ND	U	g
Endrin Aldehyde	0.0002	0.0003	0.016	ND	0.019	ND	U	g		0.0008	ND	0.0009	ND	U	g
gamma-Chlordane	0.0001	0.0001	0.0038	ND	0.0056	ND	U	g		0.00019	ND	0.00028	ND	U	g
alpha-Chlordane	0.0001	0.0001	0.0045	ND	0.0080	ND	U	g		0.00022	ND	0.00040	ND	U	g
Toxaphene	0.007	0.009	0.52	ND	0.64	ND	U	g		0.03	ND	0.03	ND	U	g
Arochlor 1016	0.009	0.009	0.62	ND	0.60	ND	U	g		0.03	ND	0.03	ND	U	g
Arochlor 1242	0.005	0.008	0.38	ND	0.54	ND	U	g		0.02	ND	0.03	ND	U	g
Arochlor 1248	0.004	0.005	0.25	ND	0.33	ND	U	g		0.01	ND	0.02	ND	U	g
Arochlor 1254	0.011	0.009	0.75	ND	0.64	ND	U	g		0.04	ND	0.03	ND	U	g
Arochlor 1260	0.009	0.010	0.61	ND	0.32	ND	U	g		0.03	ND	0.02	ND	U	g
Arochlor 1221	0.011	0.010	0.74	ND	0.67	ND	U	g		0.04	ND	0.03	ND	U	g
Arochlor 1232	0.005	0.005	0.32	ND	0.32	ND	U	g		0.02	ND	0.00	ND	U	g

Base: Kotzebue LRRS							Table 2.1.4								
Site: AOC1							Analytical Data Summary								
Extraction Method: EPA Method 3550							EPA Method 8081								
Analytical Method: EPA Method 8081															
Matrix: Soil															
Units: mg/kg															
				Environmental Samples											
			Field ID:		AOC1-SB8-1.0		AOC1-SB8-1.0				AOC1-SB9-1.0		AOC1-SB9-1.0		
			Batch ID:		H569		H569				H569		H569		
	DB-5	DB-608		DB-5	DB-5	DB-608	DB-608			DB-5	DB-5	DB-608	DB-608		
Parameters	MDL	MDL		PQL	Result	PQL	Result	Validity	Comments	PQL	Result	PQL	Result	Validity	Comments
alpha BHC	0.0001	0.0001		0.00022	ND	0.00019	ND	U	g	0.00022	ND	0.00020	ND	U	g
beta BHC	0.0001	0.0001		0.00033	ND	0.00030	ND	U	g	0.00034	0.0041	0.00032	0.00081		g
delta BHC	0.0001	0.0001		0.00034	ND	0.00025	ND	U	g	0.00035	0.015	0.00026	ND	U	h
gamma BHC (Lindane)	0.0001	0.0001		0.00026	ND	0.00022	ND	U	g	0.00028	0.0017	0.00023	0.0019		g
Heptachlor	0.0001	0.0001		0.0003	ND	0.0003	ND	U	g	0.0003	ND	0.0003	ND	U	g
Aldrin	0.0001	0.0001		0.00021	ND	0.00027	ND	U	g	0.00022	0.0024	0.00028	0.0043		g
Heptachlor Epoxide	0.0001	0.0001		0.00026	0.0028	0.00034	ND	U	h,k	0.00028	0.087	0.00035	ND	U	h,k
Endosulfan I	0.0001	0.0001		0.00039	ND	0.00039	ND	U	g	0.00040	ND	0.00040	ND	U	g
Dieldrin	0.0001	0.0002		0.0004	ND	0.0005	ND	U	g	0.0004	0.0005	0.0005	0.0014	J	n
4,4'-DDE	0.0001	0.0002		0.0003	0.0026	0.0005	0.0021		g	0.0004	0.0034	0.0005	0.0054		g
Endrin	0.0001	0.0001		0.0003	ND	0.0004	ND	U	g	0.0004	0.0005	0.0004	ND	U	h
Endosulfan II	0.0002	0.0002		0.0006	ND	0.0005	ND	U	g	0.0006	ND	0.0006	ND	U	g
4,4'-DDD	0.0001	0.0001		0.0004	0.0030	0.0005	0.0035		g	0.0004	0.040	0.0005	0.039		g
Endosulfan Sulfate	0.0002	0.0002		0.0008	ND	0.0008	ND	U	g	0.0009	ND	0.0009	ND	U	g
4,4'-DDT	0.0002	0.0001		0.0008	0.0078	0.0004	0.0074		g	0.0008	0.0038	0.0005	0.0037		g
Methoxychlor	0.0008	0.0011		0.0029	ND	0.0037	ND	U	g	0.0030	ND	0.0038	ND	R	h
Endrin Aldehyde	0.0002	0.0003		0.0008	0.0005	0.0009	ND	U	h	0.0008	0.010	0.0009	ND	U	h
gamma-Chlordane	0.0001	0.0001		0.00018	ND	0.00027	ND	U	g	0.00019	ND	0.00028	ND	U	g
alpha-Chlordane	0.0001	0.0001		0.00022	ND	0.00039	ND	U	g	0.00022	ND	0.00040	ND	U	g
Toxaphene	0.007	0.009		0.03	ND	0.03	ND	U	g	0.03	ND	0.03	ND	U	g
Arochlor 1016	0.009	0.009		0.03	ND	0.03	ND	U	g	0.03	ND	0.03	ND	U	g
Arochlor 1242	0.005	0.008		0.02	ND	0.03	ND	U	g	0.02	ND	0.03	ND	U	g
Arochlor 1248	0.004	0.005		0.01	ND	0.02	ND	U	g	0.01	ND	0.02	ND	U	g
Arochlor 1254	0.011	0.009		0.04	ND	0.03	ND	U	g	0.04	ND	0.03	ND	U	g
Arochlor 1260	0.009	0.010		0.03	ND	0.02	ND	U	g	0.03	ND	0.02	ND	U	g
Arochlor 1221	0.011	0.010		0.04	ND	0.03	ND	U	g	0.04	ND	0.03	ND	U	g
Arochlor 1232	0.005	0.005		0.02	ND	0.00	ND	U	g	0.02	ND	0.00	ND	U	g

Base: Kotzebue LRRS						Table 8.2.1.6								
Site: AOC1						Analytical Data Summary								
Extraction Method: EPA Method 5030						EPA Method 8260								
Analytical Method: EPA Method 8260														
Matrix: Soil														
Units: mg/kg														
			Environmental Samples											
		Field ID:		AOC1-SB1-1.5				AOC1-SB10-2.0				AOC1-SB10-2.0**		
		Batch ID:		H569				H569				H569		
Parameters	MDL		PQL	Result	Validity	Comments	PQL	Result	Validity	Comments	PQL	Result	Validity	Comments
Chloromethane	0.0009		0.003	ND	U	g	0.023	ND	U	g	0.37	ND	U	g
Bromomethane	0.0008		0.003	ND	U	g	0.021	ND	U	g	0.34	ND	U	g
Vinyl Chloride	0.0010		0.003	ND	U	g	0.025	ND	U	g	0.40	ND	U	g
Chloroethane	0.0010		0.003	ND	U	g	0.026	ND	U	g	0.42	ND	U	g
Methylene Chloride	0.0009		0.003	0.002	B J	a	0.022	ND	U	g	0.36	0.28	B J	a
Acetone	0.0039		0.01	ND	U	k	0.12	ND	U	k	1.6	0.72	J	k
Carbon Disulfide	0.0005		0.002	ND	U	g	0.014	ND	U	g	0.22	ND	U	g
1,1-Dichloroethene	0.0012		0.004	ND	U	g	0.030	ND	U	g	0.48	ND	U	g
1,1-Dichloroethane	0.0004		0.001	ND	U	g	0.009	ND	U	g	0.15	ND	U	g
trans-1,2-Dichloroethene	0.0009		0.003	ND	U	g	0.023	ND	U	g	0.37	ND	U	g
cis-1,2-Dichloroethene	0.0011		0.004	ND	U	g	0.029	ND	U	g	0.47	ND	U	g
Chloroform	0.0005		0.001	ND	U	k	0.012	ND	U	k	0.19	ND	U	k
1,2-Dichloroethane	0.0005		0.002	ND	U	g	0.013	ND	U	g	0.21	ND	U	g
Methyl Ethyl Ketone (2-butanone)	0.0025		0.008	ND	U	k	0.064	ND	U	k	1.0	ND	U	k
1,1,1-Trichloroethane	0.0004		0.001	ND	U	g	0.011	ND	U	g	0.18	ND	U	g
Carbon Tetrachloride	0.0010		0.003	ND	U	g	0.025	ND	U	g	0.41	ND	U	g
Vinyl Acetate	0.0016		0.005	ND	U	g	0.042	ND	U	g	0.67	ND	U	g
Bromodichloromethane	0.0006		0.002	ND	U	g	0.017	ND	U	g	0.27	ND	U	g
1,2-Dichloropropane	0.0008		0.003	ND	U	g	0.022	ND	U	g	0.35	ND	U	g
cis-1,3-Dichloropropene	0.0007		0.002	ND	U	g	0.018	ND	U	g	0.29	ND	U	g
Trichloroethene (tce)	0.0005		0.002	ND	U	g	0.014	ND	U	g	0.22	ND	U	g
Dibromochloromethane	0.0003		0.001	ND	U	g	0.009	ND	U	g	0.14	ND	U	g
1,1,2-Trichloroethane	0.0007		0.002	ND	U	g	0.018	ND	U	g	0.29	ND	U	g
Benzene	0.0005		0.0015	ND	U	g	0.012	ND	U	g	0.20	ND	U	g
** Reanalyzed.														

Base: Kotzebue LRRS						Table 8.2.1.5								
Site: AOC1						Analytical Data Summary								
Extraction Method: EPA Method 5030						EPA Method 8260								
Analytical Method: EPA Method 8260														
Matrix: Soil														
Units: mg/kg														
			Environmental Samples											
		Field ID:		AOC1-SB1-1.5				AOC1-SB10-2.0				AOC1-SB10-2.0**		
		Batch ID:		H569				H569				H569		
Parameters	MDL		PQL	Result	Validity	Comments	PQL	Result	Validity	Comments	PQL	Result	Validity	Comments
trans-1,3-Dichloropropene	0.0005		0.002	ND	U	g	0.014	ND	U	g	0.22	ND	U	g
2-Chloroethyl Vinyl Ether	0.0006		0.002	ND	U	g	0.017	ND	U	g	0.27	ND	U	g
Bromoform	0.0013		0.004	ND	U	g	0.033	ND	U	g	0.52	ND	U	g
Methyl Isobutyl Ketone	0.0015		0.005	ND	U	g	0.039	ND	U	g	0.62	ND	U	g
2-Hexanone	0.0027		0.009	ND	U	g	0.071	ND	U	g	1.1	ND	U	g
Tetrachloroethene (pce)	0.0009		0.003	ND	U	g	0.023	ND	U	g	0.37	ND	U	g
1,1,2,2-Tetrachloroethane	0.0009		0.0029	ND	U	g	0.024	ND	U	g	0.38	ND	U	g
Toluene	0.0009		0.0029	ND	U	k	0.024	0.27	J	k	0.38	0.37	J	k
Chlorobenzene	0.0007		0.002	ND	U	g	0.019	ND	U	g	0.30	ND	U	g
Ethylbenzene	0.0004		0.0014	ND	U	g	0.011	0.17		g	0.18	0.53		g
Styrene	0.0006		0.002	ND	U	g	0.017	ND	U	g	0.27	ND	U	g
1,1,2-Trichloro-1,2,2-trifluoroethane	0.0007		0.002	ND	U	g	0.019	ND	U	g	0.31	ND	U	g
Xylenes, total	0.0020		0.006	ND	U	k	0.052	9.9 E*	J	n	0.84	28		k
1,1,1,2-Tetrachloroethane	0.0010		0.003	ND	U	g	0.026	ND	U	g	0.42	ND	U	g
1,2,3-Trichloropropane	0.0023		0.007	ND	U	g	0.058	ND	U	g	0.94	ND	U	g
Bromochloromethane	0.0007		0.002	ND	U	g	0.017	ND	U	g	0.28	ND	U	g
1-Chlorohexane	0.0007		0.002	ND	U	g	0.017	ND	U	g	0.27	ND	U	g
m,p-xylene	0.0010		0.002	ND	U	g	NR	ND	U	g	NR	ND	U	g
o-xylene	0.0011		0.002	ND	U	g	NR	ND	U	g	NR	ND	U	g
Bromobenzene	0.0007		0.0023	ND	U	g	0.019	ND	U	g	0.30	ND	U	g
NR = Not Reported.														
* Analyte detected above linear calibration range.														
** Reanalyzed.														

Base: Kotzebue LRRS						Table 8.2.1.5								
Site: AOC1						Analytical Data Summary								
Extraction Method: EPA Method 5030						EPA Method 8260								
Analytical Method: EPA Method 8260														
Matrix: Soil														
Units: mg/kg														
			Environmental Samples											
		Field ID:		AOC1-SB12-3.0				AOC1-SB2-1.0				AOC1-SB4-2.0		
		Batch ID:		H569				H569				H569		
Parameters	MDL		PQL	Result	Validity	Comments	PQL	Result	Validity	Comments	PQL	Result	Validity	Comments
Chloromethane	0.0009		0.003	ND	U	g	0.003	ND	U	g	0.003	ND	U	g
Bromomethane	0.0008		0.003	ND	U	g	0.003	ND	U	g	0.003	ND	U	g
Vinyl Chloride	0.0010		0.003	ND	U	g	0.003	ND	U	g	0.003	ND	U	g
Chloroethane	0.0010		0.004	ND	U	g	0.003	ND	U	g	0.003	ND	U	g
Methylene Chloride	0.0009		0.003	0.001	B J	a	0.003	0.002	B J	a	0.003	0.002	B J	a
Acetone	0.0039		0.01	0.01	B J	k	0.01	ND	U	k	0.01	ND	U	k
Carbon Disulfide	0.0005		0.002	ND	U	g	0.003	ND	U	g	0.002	ND	U	g
1,1-Dichloroethene	0.0012		0.004	ND	U	g	0.004	ND	U	g	0.004	ND	U	g
1,1-Dichloroethane	0.0004		0.001	ND	U	g	0.001	ND	U	g	0.001	ND	U	g
trans-1,2-Dichloroethene	0.0009		0.003	ND	U	g	0.003	ND	U	g	0.003	ND	U	g
cis-1,2-Dichloroethene	0.0011		0.004	ND	U	g	0.004	ND	U	g	0.004	ND	U	g
Chloroform	0.0005		0.002	ND	U	k	0.002	ND	U	k	0.001	ND	U	k
1,2-Dichloroethane	0.0005		0.002	ND	U	g	0.002	ND	U	g	0.002	ND	U	g
Methyl Ethyl Ketone (2-butanone)	0.0025		0.009	ND	U	k	0.008	ND	U	k	0.008	ND	U	k
1,1,1-Trichloroethane	0.0004		0.002	ND	U	g	0.001	ND	U	g	0.001	ND	U	g
Carbon Tetrachloride	0.0010		0.003	ND	U	g	0.003	ND	U	g	0.003	ND	U	g
Vinyl Acetate	0.0016		0.006	ND	U	g	0.005	ND	U	g	0.005	ND	U	g
Bromodichloromethane	0.0006		0.002	ND	U	g	0.002	ND	U	g	0.002	ND	U	g
1,2-Dichloropropane	0.0008		0.003	ND	U	g	0.003	ND	U	g	0.003	ND	U	g
cis-1,3-Dichloropropene	0.0007		0.002	ND	U	g	0.002	ND	U	g	0.002	ND	U	g
Trichloroethene (tce)	0.0005		0.002	ND	U	g	0.002	ND	U	g	0.002	ND	U	g
Dibromochloromethane	0.0003		0.001	ND	U	g	0.001	ND	U	g	0.001	ND	U	g
1,1,2-Trichloroethane	0.0007		0.002	ND	U	g	0.002	ND	U	g	0.002	ND	U	g
Benzene	0.0005		0.0017	ND	U	g	0.0016	ND	U	g	0.0015	ND	U	g

Base: Kotzebue LRRS						Table 8.2.1.5								
Site: AOC1						Analytical Data Summary								
Extraction Method: EPA Method 5030						EPA Method 8260								
Analytical Method: EPA Method 8260														
Matrix: Soil														
Units: mg/kg														
			Environmental Samples											
		Field ID:		AOC1-SB12-3.0				AOC1-SB2-1.0				AOC1-SB4-2.0		
		Batch ID:		H569				H569				H569		
Parameters	MDL		PQL	Result	Validity	Comments	PQL	Result	Validity	Comments	PQL	Result	Validity	Comments
trans-1,3-Dichloropropene	0.0005		0.002	ND	U	g	0.002	ND	U	g	0.002	ND	U	g
2-Chloroethyl Vinyl Ether	0.0006		0.002	ND	U	g	0.002	ND	U	g	0.002	ND	U	g
Bromoform	0.0013		0.004	ND	U	g	0.004	ND	U	g	0.004	ND	U	g
Methyl Isobutyl Ketone	0.0015		0.005	ND	U	g	0.005	ND	U	g	0.005	ND	U	g
2-Hexanone	0.0027		0.010	ND	U	g	0.009	ND	U	g	0.009	ND	U	g
Tetrachloroethene (pce)	0.0009		0.003	0.004		g	0.003	ND	U	g	0.003	ND	U	g
1,1,2,2-Tetrachloroethane	0.0009		0.0032	ND	U	g	0.0030	ND	U	g	0.0030	ND	U	g
Toluene	0.0009		0.0032	ND	U	k	0.0030	ND	U	k	0.0030	ND	U	k
Chlorobenzene	0.0007		0.003	ND	U	g	0.002	ND	U	g	0.002	ND	U	g
Ethylbenzene	0.0004		0.0015	ND	U	g	0.0014	ND	U	g	0.0014	ND	U	g
Styrene	0.0006		0.002	ND	U	g	0.002	ND	U	g	0.002	ND	U	g
1,1,2-Trichloro-1,2,2-trifluoroethane	0.0007		0.003	ND	U	g	0.002	ND	U	g	0.002	ND	U	g
Xylenes, total	0.0020		0.007	ND	U	k	0.007	ND	U	g	0.007	ND	U	k
1,1,1,2-Tetrachloroethane	0.0010		0.004	ND	U	g	0.003	ND	U	k	0.003	ND	U	g
1,2,3-Trichloropropane	0.0023		0.008	ND	U	g	0.008	ND	U	g	0.007	ND	U	g
Bromochloromethane	0.0007		0.002	ND	U	g	0.002	ND	U	g	0.002	ND	U	g
1-Chlorohexane	0.0007		0.002	ND	U	g	0.002	ND	U	g	0.002	ND	U	g
Bromobenzene	0.0007		0.0026	ND	U	g	0.0024	ND	U	g	0.0024	ND	U	g

Base: Kotzebue LRRS						Table 8.2.1.6								
Site: AOC1						Analytical Data Summary								
Extraction Method: EPA Method 5030						EPA Method 8260								
Analytical Method: EPA Method 8260														
Matrix: Soil														
Units: mg/kg														
			Environmental Samples											
		Field ID:		AOC1-SB7-1.5				AOC1-SB8-1.0				AOC1-SB9-1.0		
		Batch ID:		H589				H589				H569		
Parameters	MDL		PQL	Result	Validity	Comments	PQL	Result	Validity	Comments	PQL	Result	Validity	Comments
Chloromethane	0.0009		0.003	ND	U	g	0.003	ND	U	g	0.003	ND	U	g
Bromomethane	0.0008		0.003	ND	U	g	0.003	ND	U	g	0.003	ND	U	g
Vinyl Chloride	0.0010		0.003	ND	U	g	0.003	ND	U	g	0.003	ND	U	g
Chloroethane	0.0010		0.003	ND	U	g	0.003	ND	U	g	0.003	ND	U	g
Methylene Chloride	0.0009		0.003	ND	U	a	0.003	0.002	B J	a	0.003	0.002	B J	a
Acetone	0.0039		0.01	ND	U	k	0.01	0.01	B J	k	0.01	0.01	B J	k
Carbon Disulfide	0.0005		0.002	ND	U	g	0.002	ND	U	g	0.002	ND	U	g
1,1-Dichloroethene	0.0012		0.004	ND	U	g	0.004	ND	U	g	0.004	ND	U	g
1,1-Dichloroethane	0.0004		0.001	ND	U	g	0.001	ND	U	g	0.001	ND	U	g
trans-1,2-Dichloroethene	0.0009		0.003	ND	U	g	0.003	ND	U	g	0.003	ND	U	g
cis-1,2-Dichloroethene	0.0011		0.004	ND	U	g	0.004	ND	U	g	0.004	0.002	J	
Chloroform	0.0005		0.002	ND	U	k	0.002	ND	U	k	0.002	ND	U	k
1,2-Dichloroethane	0.0005		0.002	ND	U	g	0.002	ND	U	g	0.002	ND	U	g
Methyl Ethyl Ketone (2-butanone)	0.0025		0.008	ND	U	k	0.009	ND	U	k	0.008	0.005	B J	k
1,1,1-Trichloroethane	0.0004		0.001	ND	U	g	0.001	ND	U	g	0.001	ND	U	g
Carbon Tetrachloride	0.0010		0.003	ND	U	g	0.003	ND	U	g	0.003	ND	U	g
Vinyl Acetate	0.0016		0.005	ND	U	g	0.006	ND	U	g	0.005	ND	U	g
Bromodichloromethane	0.0006		0.002	ND	U	g	0.002	ND	U	g	0.002	ND	U	g
1,2-Dichloropropane	0.0008		0.003	ND	U	g	0.003	ND	U	g	0.003	ND	U	g
cis-1,3-Dichloropropene	0.0007		0.002	ND	U	g	0.002	ND	U	g	0.002	ND	U	g
Trichloroethene (tce)	0.0005		0.002	ND	U	g	0.002	ND	U	g	0.002	0.001	J	
Dibromochloromethane	0.0003		0.001	ND	U	g	0.001	ND	U	g	0.001	ND	U	g
1,1,2-Trichloroethane	0.0007		0.002	ND	U	g	0.002	ND	U	g	0.002	ND	U	g
Benzene	0.0005		0.0016	ND	U	g	0.0016	ND	U	g	0.0016	ND	U	g

Base: Kotzebue LRRS						Table 8.2.1.5								
Site: AOC1						Analytical Data Summary								
Extraction Method: EPA Method 5030						EPA Method 8260								
Analytical Method: EPA Method 8260														
Matrix: Soil														
Units: mg/kg														
			Environmental Samples											
		Field ID:		AOC1-SB7-1.5				AOC1-SB8-1.0				AOC1-SB9-1.0		
		Batch ID:		H569				H569				H569		
Parameters	MDL		PQL	Result	Validity	Comments	PQL	Result	Validity	Comments	PQL	Result	Validity	Comments
trans-1,3-Dichloropropene	0.0005		0.002	ND	U	g	0.002	ND	U	g	0.002	ND	U	g
2-Chloroethyl Vinyl Ether	0.0006		0.002	ND	U	g	0.002	ND	U	g	0.002	ND	U	g
Bromoform	0.0013		0.004	ND	U	g	0.004	ND	U	g	0.004	ND	U	g
Methyl Isobutyl Ketone	0.0015		0.005	ND	U	g	0.005	ND	U	g	0.005	ND	U	g
2-Hexanone	0.0027		0.009	ND	U	g	0.009	ND	U	g	0.009	ND	U	g
Tetrachloroethene (pce)	0.0009		0.003	ND	U	g	0.003	ND	U	g	0.003	0.027		g
1,1,2,2-Tetrachloroethane	0.0009		0.0031	ND	U	g	0.0031	ND	U	g	0.0031	ND	U	g
Toluene	0.0009		0.0031	ND	U	k	0.0031	ND	U	k	0.0031	ND	U	k
Chlorobenzene	0.0007		0.002	ND	U	g	0.002	ND	U	g	0.002	ND	U	g
Ethylbenzene	0.0004		0.0015	ND	U	g	0.0015	ND	U	g	0.0015	ND	U	g
Styrene	0.0006		0.002	ND	U	g	0.002	ND	U	g	0.002	ND	U	g
1,1,2-Trichloro-1,2,2-trifluoroethane	0.0007		0.002	ND	U	g	0.003	ND	U	g	0.003	ND	U	g
Xylenes, total	0.0020		0.007	ND	U	k	0.007	ND	U	k	0.007	ND	U	k
1,1,1,2-Tetrachloroethane	0.0010		0.003	ND	U	g	0.003	ND	U	g	0.003	ND	U	g
1,2,3-Trichloropropane	0.0023		0.008	ND	U	g	0.008	ND	U	g	0.008	ND	U	g
Bromochloromethane	0.0007		0.002	ND	U	g	0.002	ND	U	g	0.002	ND	U	g
1-Chlorohexane	0.0007		0.002	ND	U	g	0.002	ND	U	g	0.002	ND	U	g
Bromobenzene	0.0007		0.0025	ND	U	g	0.0025	ND	U	g	0.0025	ND	U	g

Base: Kotzebue LRRS						Table 2.1.6								
Site: AOC1						Analytical Data Summary								
Extraction Method: EPA Method 3550						EPA Method 8270								
Analytical Method: EPA Method 8270														
Matrix: Soil														
Units: mg/kg														
			Environmental Samples											
		Field ID:		AOC1-SB1-1.5				AOC1-SB10-2.0				AOC1-SB12-3.0		
		Batch ID:		H569				H569				H569		
Parameters	MDL		PQL	Result	Validity	Comments	PQL	Result	Validity	Comments	PQL	Result	Validity	Comments
Phenol	0.05		0.2	ND	U	g	0.2	ND	U	g	0.2	ND	U	g
bis(2-Chloroethyl) Ether	0.04		0.1	ND	U	g	0.1	ND	U	g	0.1	ND	U	g
2-Chlorophenol	0.07		0.3	ND	U	g	0.2	ND	U	g	0.2	ND	U	g
1,3-Dichlorobenzene	0.04		0.1	ND	U	g	0.1	ND	U	g	0.1	ND	U	g
1,4-Dichlorobenzene	0.03		0.1	ND	U	g	0.1	ND	U	g	0.1	ND	U	g
Benzyl Alcohol	0.05		0.2	ND	U	g	0.2	ND	U	g	0.2	ND	U	g
1,2-Dichlorobenzene	0.04		0.1	ND	U	g	0.1	ND	U	g	0.1	ND	U	g
2-Methylphenol	0.10		0.3	ND	U	g	0.3	ND	U	g	0.3	ND	U	g
2,2'-Oxybis (1-Chloropropane)	0.03		0.1	ND	U	g	0.1	ND	U	g	0.1	ND	U	g
4-Methylphenol	0.08		0.3	ND	U	g	0.2	ND	U	g	0.3	ND	U	g
N-Nitrosodi-n-propylamine	0.03		0.1	ND	U	g	0.1	ND	U	g	0.1	ND	U	g
Hexachloroethane	0.04		0.1	ND	U	g	0.1	ND	U	g	0.1	ND	U	g
Nitrobenzene	0.02		0.1	ND	U	g	0.1	ND	U	g	0.1	ND	U	g
Isophorone	0.03		0.1	ND	U	g	0.1	ND	U	g	0.1	ND	U	g
2-Nitrophenol	0.03		0.1	ND	U	g	0.1	ND	U	g	0.1	ND	U	g
2,4-Dimethylphenol	0.17		0.3	ND	U	g	0.3	ND	U	g	0.3	ND	U	g
Benzoic Acid	0.06		0.20	ND	U	g	0.18	ND	U	g	0.19	ND	U	g
bis(2-Chloroethoxy) Methane	0.04		0.1	ND	U	g	0.1	ND	U	g	0.1	ND	U	g
2,4-Dichlorophenol	0.04		0.2	ND	U	g	0.1	ND	U	g	0.1	ND	U	g
1,2,4-Trichlorobenzene	0.03		0.1	ND	U	g	0.1	ND	U	g	0.1	ND	U	g
Naphthalene	0.04		0.1	ND	U	g	0.1	2.4		g	0.1	ND	U	g
4-Chloroaniline	0.10		0.4	ND	U	g	0.3	ND	U	g	0.3	ND	U	g
Hexachlorobutadiene	0.03		0.1	ND	U	g	0.1	ND	U	g	0.1	ND	U	g
4-Chloro-3-Methylphenol	0.06		0.2	ND	U	g	0.2	ND	U	g	0.2	ND	U	g
2-Methylnaphthalene	0.03		0.1	ND	U	g	0.1	2.5		g	0.1	ND	U	g
Hexachlorocyclopentadiene	0.03		0.1	ND	U	g	0.1	ND	U	g	0.1	ND	U	g
2,4,6-Trichlorophenol	0.04		0.1	ND	U	g	0.1	ND	U	g	0.1	ND	U	g
2,4,5-Trichlorophenol	0.03		0.09	ND	U	g	0.08	ND	U	g	0.09	ND	U	g
2-Chloronaphthalene	0.03		0.1	ND	U	g	0.1	ND	U	g	0.1	ND	U	g
2-Nitroaniline	0.02		0.07	ND	U	g	0.06	ND	U	g	0.06	ND	U	g
Dimethyl Phthalate	0.04		0.1	ND	U	g	0.1	ND	U	g	0.1	ND	U	g
Acenaphthylene	0.04		0.1	ND	U	g	0.1	ND	U	g	0.1	ND	U	g
3-Nitroaniline	0.11		0.39	ND	U	g	0.35	ND	U	g	0.38	ND	U	g
Acenaphthene	0.03		0.1	ND	U	g	0.1	ND	U	g	0.1	ND	U	g
2,4-Dinitrophenol	0.09		0.31	ND	U	g	0.28	ND	U	g	0.30	ND	U	g
4-Nitrophenol	0.07		0.23	ND	U	g	0.21	ND	U	g	0.22	ND	U	g
Dibenzofuran	0.03		0.1	ND	U	g	0.1	ND	U	g	0.1	ND	U	g
2,6-Dinitrotoluene	0.04		0.1	ND	U	g	0.1	ND	U	g	0.1	ND	U	g

Base: Kotzebue LRRS						Table 2.1.6								
Site: AOC1						Analytical Data Summary								
Extraction Method: EPA Method 3550						EPA Method 8270								
Analytical Method: EPA Method 8270														
Matrix: Soil														
Units: mg/kg														
			Environmental Samples											
		Field ID:		AOC1-SB1-1.5				AOC1-SB10-2.0				AOC1-SB12-3.0		
		Batch ID:		H569				H569				H569		
Parameters	MDL		PQL	Result	Validity	Comments	PQL	Result	Validity	Comments	PQL	Result	Validity	Comments
2,4-Dinitrotoluene	0.02		0.1	ND	U	g	0.1	ND	U	g	0.1	ND	U	g
Diethyl Phthalate	0.04		0.1	ND	U	g	0.1	ND	U	g	0.1	ND	U	g
4-Chlorophenyl Phenyl Ether	0.02		0.1	ND	U	g	0.1	ND	U	g	0.1	ND	U	g
Fluorene	0.03		0.1	ND	U	g	0.1	0.1	J		0.1	ND	U	g
4-Nitroaniline	0.13		0.47	ND	U	g	0.42	ND	U	g	0.45	ND	U	g
4,6-Dinitro-2-Methylphenol	0.09		0.31	ND	U	g	0.28	ND	U	g	0.30	ND	U	g
N-Nitrosodiphenylamine	0.08		0.3	ND	U	g	0.3	ND	U	g	0.3	ND	U	g
4-Bromophenyl Phenyl Ether	0.02		0.1	ND	U	g	0.1	ND	U	g	0.1	ND	U	g
Hexachlorobenzene	0.03		0.1	ND	U	g	0.1	ND	U	g	0.1	ND	U	g
Pentachlorophenol	0.03		0.12	ND	U	g	0.10	ND	U	g	0.11	ND	U	g
Phenanthrene	0.03		0.1	ND	U	g	0.1	0.1	J		0.1	ND	U	g
Anthracene	0.04		0.2	ND	U	g	0.1	ND	U	g	0.1	ND	U	g
di-n-butyl Phthalate	0.06		0.2	ND	U	g	0.2	ND	U	g	0.2	ND	U	g
Fluroanthene	0.03		0.1	ND	U	g	0.1	0.04	J		0.1	ND	U	g
Pyrene	0.03		0.1	ND	U	g	0.1	0.1	U	g	0.1	ND	U	g
Butylbenzylphthalate	0.02		0.1	ND	U	g	0.1	ND	U	g	0.1	ND	U	g
3,3'-Dichlorobenzidine	0.06		0.2	ND	U	g	0.2	ND	U	g	0.2	ND	U	g
Benzo(a)anthracene	0.04		0.1	ND	U	g	0.1	ND	U	g	0.1	ND	U	g
bis(2-Ethylhexyl) Phthalate	0.04		0.1	0.1	B J	a	0.1	0.6	B	a	0.1	0.1	B J	a
Chrysene	0.05		0.2	ND	U	g	0.1	ND	U	g	0.2	ND	U	g
di-n-Octylphthalate	0.02		0.1	ND	U	g	0.1	ND	U	g	0.1	ND	U	g
Benzo(b)fluoranthene	0.04		0.2	ND	U	g	0.1	ND	U	g	0.1	ND	U	g
Benzo(k)fluoranthene	0.07		0.3	ND	U	g	0.2	ND	U	g	0.3	ND	U	g
Benzo(a)pyrene	0.04		0.1	ND	U	g	0.1	ND	U	g	0.1	ND	U	g
Indeno(1,2,3-c,d)pyrene	0.03		0.1	ND	U	g	0.1	ND	U	g	0.1	ND	U	g
Dibenzo(a,h)anthracene	0.02		0.1	ND	U	g	0.1	ND	U	g	0.1	ND	U	g
Benzo(g,h,i)perylene	0.03		0.1	ND	U	g	0.1	ND	U	g	0.1	ND	U	g

Base: Kotzebue LRRS
Site: AOC1
Extraction Method: EPA Method 3550
Analytical Method: EPA Method 8270
Matrix: Soil
Units: mg/kg

Table 2.1.6
Analytical Data Summary
EPA Method 8270

			Environmental Samples											
		Field ID:		AOC1-SB2-1.0				AOC1-SB4-2.0				AOC1-SB7-1.5		
		Batch ID:		H569				H569				H569		
Parameters	MDL		PQL	Result	Validity	Comments	PQL	Result	Validity	Comments	PQL	Result	Validity	Comments
Phenol	0.05		0.2	ND	U	g	0.2	ND	U	g	0.2	ND	U	g
bis(2-Chloroethyl) Ether	0.04		0.1	ND	U	g	0.1	ND	U	g	0.1	ND	U	g
2-Chlorophenol	0.07		0.2	ND	U	g	0.2	ND	U	g	0.2	ND	U	g
1,3-Dichlorobenzene	0.04		0.1	ND	U	g	0.1	ND	U	g	0.1	ND	U	g
1,4-Dichlorobenzene	0.03		0.1	ND	U	g	0.1	ND	U	g	0.1	ND	U	g
Benzyl Alcohol	0.05		0.2	ND	U	g	0.2	ND	U	g	0.2	ND	U	g
1,2-Dichlorobenzene	0.04		0.1	ND	U	g	0.1	ND	U	g	0.1	ND	U	g
2-Methylphenol	0.10		0.3	ND	U	g	0.3	ND	U	g	0.3	ND	U	g
2,2'-Oxybis (1-Chloropropane)	0.03		0.1	ND	U	g	0.1	ND	U	g	0.1	ND	U	g
4-Methylphenol	0.08		0.3	ND	U	g	0.3	ND	U	g	0.3	ND	U	g
N-Nitrosodi-n-propylamine	0.03		0.1	ND	U	g	0.1	ND	U	g	0.1	ND	U	g
Hexachloroethane	0.04		0.1	ND	U	g	0.1	ND	U	g	0.1	ND	U	g
Nitrobenzene	0.02		0.1	ND	U	g	0.1	ND	U	g	0.1	ND	U	g
Isophorone	0.03		0.1	ND	U	g	0.1	ND	U	g	0.1	ND	U	g
2-Nitrophenol	0.03		0.1	ND	U	g	0.1	ND	U	g	0.1	ND	U	g
2,4-Dimethylphenol	0.17		0.3	ND	U	g	0.3	ND	U	g	0.3	ND	U	g
Benzoic Acid	0.06		0.19	ND	U	g	0.19	ND	U	g	0.19	ND	U	g
bis(2-Chloroethoxy) Methane	0.04		0.1	ND	U	g	0.1	ND	U	g	0.1	ND	U	g
2,4-Dichlorophenol	0.04		0.2	ND	U	g	0.2	ND	U	g	0.1	ND	U	g
1,2,4-Trichlorobenzene	0.03		0.1	ND	U	g	0.1	ND	U	g	0.1	ND	U	g
Naphthalene	0.04		0.1	ND	U	g	0.1	ND	U	g	0.1	ND	U	g
4-Chloroaniline	0.10		0.3	ND	U	g	0.4	ND	U	g	0.3	ND	U	g
Hexachlorobutadiene	0.03		0.1	ND	U	g	0.1	ND	U	g	0.1	ND	U	g
4-Chloro-3-Methylphenol	0.06		0.2	ND	U	g	0.2	ND	U	g	0.2	ND	U	g
2-Methylnaphthalene	0.03		0.1	ND	U	g	0.1	ND	U	g	0.1	ND	U	g
Hexachlorocyclopentadiene	0.03		0.1	ND	U	g	0.1	ND	U	g	0.1	ND	U	g
2,4,6-Trichlorophenol	0.04		0.1	ND	U	g	0.1	ND	U	g	0.1	ND	U	g
2,4,5-Trichlorophenol	0.03		0.09	ND	U	g	0.09	ND	U	g	0.09	ND	U	g
2-Chloronaphthalene	0.03		0.1	ND	U	g	0.1	ND	U	g	0.1	ND	U	g
2-Nitroaniline	0.02		0.06	ND	U	g	0.07	ND	U	g	0.06	ND	U	g
Dimethyl Phthalate	0.04		0.1	ND	U	g	0.1	ND	U	g	0.1	ND	U	g
Acenaphthylene	0.04		0.1	ND	U	g	0.1	ND	U	g	0.1	ND	U	g
3-Nitroaniline	0.11		0.38	ND	U	g	0.38	ND	U	g	0.37	ND	U	g
Acenaphthene	0.03		0.1	ND	U	g	0.1	ND	U	g	0.1	ND	U	g
2,4-Dinitrophenol	0.09		0.30	ND	U	g	0.31	ND	U	g	0.30	ND	U	g
4-Nitrophenol	0.07		0.22	ND	U	g	0.23	ND	U	g	0.22	ND	U	g
Dibenzofuran	0.03		0.1	ND	U	g	0.1	ND	U	g	0.1	ND	U	g
2,6-Dinitrotoluene	0.04		0.1	ND	U	g	0.1	ND	U	g	0.1	ND	U	g

Base: Kotzebue LRRS						Table 2.1.6								
Site: AOC1						Analytical Data Summary								
Extraction Method: EPA Method 3550						EPA Method 8270								
Analytical Method: EPA Method 8270														
Matrix: Soil														
Units: mg/kg														
			Environmental Samples											
		Field ID:		AOC1-SB2-1.0				AOC1-SB4-2.0				AOC1-SB7-1.5		
		Batch ID:		H569				H569				H569		
Parameters	MDL		PQL	Result	Validity	Comments	PQL	Result	Validity	Comments	PQL	Result	Validity	Comments
2,4-Dinitrotoluene	0.02		0.1	ND	U	g	0.1	ND	U	g	0.1	ND	U	g
Diethyl Phthalate	0.04		0.1	ND	U	g	0.1	ND	U	g	0.1	ND	U	g
4-Chlorophenyl Phenyl Ether	0.02		0.1	ND	U	g	0.1	ND	U	g	0.1	ND	U	g
Fluorene	0.03		0.1	ND	U	g	0.1	ND	U	g	0.1	ND	U	g
4-Nitroaniline	0.13		0.45	ND	U	g	0.46	ND	U	g	0.45	ND	U	g
4,6-Dinitro-2-Methylphenol	0.09		0.30	ND	U	g	0.31	ND	U	g	0.30	ND	U	g
N-Nitrosodiphenylamine	0.08		0.3	ND	U	g	0.3	ND	U	g	0.3	ND	U	g
4-Bromophenyl Phenyl Ether	0.02		0.1	ND	U	g	0.1	ND	U	g	0.1	ND	U	g
Hexachlorobenzene	0.03		0.1	ND	U	g	0.1	ND	U	g	0.1	ND	U	g
Pentachlorophenol	0.03		0.11	ND	U	g	0.11	ND	U	g	0.11	ND	U	g
Phenanthrene	0.03		0.1	ND	U	g	0.1	ND	U	g	0.1	ND	U	g
Anthracene	0.04		0.1	ND	U	g	0.2	ND	U	g	0.1	ND	U	g
di-n-butyl Phthalate	0.06		0.2	ND	U	g	0.2	ND	U	g	0.2	ND	U	g
Fluroanthene	0.03		0.1	ND	U	g	0.1	ND	U	g	0.1	ND	U	g
Pyrene	0.03		0.1	0.04	J		0.1	0.05	J		0.1	ND	U	g
Butylbenzylphthalate	0.02		0.1	ND	U	g	0.1	ND	U	g	0.1	ND	U	g
3,3'-Dichlorobenzidine	0.06		0.2	ND	U	g	0.2	ND	U	g	0.2	ND	U	g
Benzo(a)anthracene	0.04		0.1	ND	U	g	0.1	ND	U	g	0.1	ND	U	g
bis(2-Ethylhexyl) Phthalate	0.04		0.1	0.1	B J	a	0.1	0.1	B J	a	0.1	0.1	B J	a
Chrysene	0.05		0.2	ND	U	g	0.2	ND	U	g	0.2	ND	U	g
di-n-Octylphthalate	0.02		0.1	ND	U	g	0.1	ND	U	g	0.1	ND	U	g
Benzo(b)fluoranthene	0.04		0.1	ND	U	g	0.1	ND	U	g	0.1	ND	U	g
Benzo(k)fluoranthene	0.07		0.3	ND	U	g	0.3	ND	U	g	0.3	ND	U	g
Benzo(a)pyrene	0.04		0.1	ND	U	g	0.1	ND	U	g	0.1	ND	U	g
Indeno(1,2,3-c,d)pyrene	0.03		0.1	ND	U	g	0.1	ND	U	g	0.1	ND	U	g
Dibenzo(a,h)anthracene	0.02		0.1	ND	U	g	0.1	ND	U	g	0.1	ND	U	g
Benzo(g,h,i)perylene	0.03		0.1	ND	U	g	0.1	ND	U	g	0.1	ND	U	g

Base: Kotzebue LRRS						Table 2.1.6								
Site: AOC1						Analytical Data Summary								
Extraction Method: EPA Method 3550						EPA Method 8270								
Analytical Method: EPA Method 8270														
Matrix: Soil														
Units: mg/kg														
			Environmental Samples											
		Field ID:		AOC1-SB8-1.0				AOC1-SB9-1.0				AOC1-SB9-1.0DL		
		Batch ID:		H569				H569				H569		
Parameters	MDL		PQL	Result	Validity	Comments	PQL	Result	Validity	Comments	PQL	Result	Validity	Comments
												Dilution 5		
Phenol	0.05		0.2	ND	U	g	0.2	ND	U	g	0.9	ND	U	g
bis(2-Chloroethyl) Ether	0.04		0.1	ND	U	g	0.1	ND	U	g	0.6	ND	U	g
2-Chlorophenol	0.07		0.2	ND	U	g	0.2	ND	U	g	1.1	ND	U	g
1,3-Dichlorobenzene	0.04		0.1	ND	U	g	0.1	ND	U	g	0.6	ND	U	g
1,4-Dichlorobenzene	0.03		0.1	ND	U	g	0.1	ND	U	g	0.4	ND	U	g
Benzyl Alcohol	0.05		0.2	ND	U	g	0.2	ND	U	g	0.8	ND	U	g
1,2-Dichlorobenzene	0.04		0.1	ND	U	g	0.1	ND	U	g	0.6	ND	U	g
2-Methylphenol	0.10		0.3	ND	U	g	0.3	ND	U	g	1.6	ND	U	g
2,2'-Oxybis (1-Chloropropane)	0.03		0.1	ND	U	g	0.1	ND	U	g	0.5	ND	U	g
4-Methylphenol	0.08		0.2	ND	U	g	0.2	ND	U	g	1.2	ND	U	g
N-Nitrosodi-n-propylamine	0.03		0.1	ND	U	g	0.1	ND	U	g	0.4	ND	U	g
Hexachloroethane	0.04		0.1	ND	U	g	0.1	ND	U	g	0.6	ND	U	g
Nitrobenzene	0.02		0.1	ND	U	g	0.1	ND	U	g	0.4	ND	U	g
Isophorone	0.03		0.1	ND	U	g	0.1	ND	U	g	0.5	ND	U	g
2-Nitrophenol	0.03		0.1	ND	U	g	0.1	ND	U	g	0.5	ND	U	g
2,4-Dimethylphenol	0.17		0.3	ND	U	g	0.3	ND	U	g	1.5	ND	U	g
Benzoic Acid	0.06		0.18	ND	U	g	0.18	0.24		g	0.90	ND	U	g
bis(2-Chloroethoxy) Methane	0.04		0.1	ND	U	g	0.1	ND	U	g	0.6	ND	U	g
2,4-Dichlorophenol	0.04		0.1	ND	U	g	0.1	ND	U	g	0.7	ND	U	g
1,2,4-Trichlorobenzene	0.03		0.1	ND	U	g	0.1	ND	U	g	0.5	ND	U	g
Naphthalene	0.04		0.1	ND	U	g	0.1	0.1	J		0.6	ND	U	g
4-Chloroaniline	0.10		0.3	ND	U	g	0.3	ND	U	g	1.6	ND	U	g
Hexachlorobutadiene	0.03		0.1	ND	U	g	0.1	ND	U	g	0.5	ND	U	g
4-Chloro-3-Methylphenol	0.06		0.2	ND	U	g	0.2	ND	U	g	0.9	ND	U	g
2-Methylnaphthalene	0.03		0.1	ND	U	g	0.1	0.1		g	0.5	ND	U	g
Hexachlorocyclopentadiene	0.03		0.1	ND	U	g	0.1	ND	U	g	0.4	ND	U	g
2,4,6-Trichlorophenol	0.04		0.1	ND	U	g	0.1	ND	U	g	0.7	ND	U	g
2,4,5-Trichlorophenol	0.03		0.08	ND	U	g	0.08	ND	U	g	0.40	ND	U	g
2-Chloronaphthalene	0.03		0.1	ND	U	g	0.1	ND	U	g	0.5	ND	U	g
2-Nitroaniline	0.02		0.06	ND	U	g	0.06	ND	U	g	0.30	ND	U	g
Dimethyl Phthalate	0.04		0.1	ND	U	g	0.1	ND	U	g	0.6	ND	U	g
Acenaphthylene	0.04		0.1	ND	U	g	0.1	ND	U	g	0.6	ND	U	g
3-Nitroaniline	0.11		0.36	ND	U	g	0.35	ND	U	g	1.8	ND	U	g
Acenaphthene	0.03		0.1	ND	U	g	0.1	ND	U	g	0.5	ND	U	g
2,4-Dinitrophenol	0.09		0.29	ND	U	g	0.28	ND	U	g	1.4	ND	U	g
4-Nitrophenol	0.07		0.21	ND	U	g	0.21	ND	U	g	1.1	ND	U	g
Dibenzofuran	0.03		0.1	ND	U	g	0.1	ND	U	g	0.5	ND	U	g
2,6-Dinitrotoluene	0.04		0.1	ND	U	g	0.1	ND	U	g	0.7	ND	U	g

Base: Kotzebue LRRS						Table 2.1.6								
Site: AOC1						Analytical Data Summary								
Extraction Method: EPA Method 3550						EPA Method 8270								
Analytical Method: EPA Method 8270														
Matrix: Soil														
Units: mg/kg														
			Environmental Samples											
		Field ID:		AOC1-SB8-1.0				AOC1-SB9-1.0				AOC1-SB9-1.0DL		
		Batch ID:		H569				H569				H569		
Parameters	MDL		PQL	Result	Validity	Comments	PQL	Result	Validity	Comments	PQL	Result	Validity	Comments
												Dilution 5		
2,4-Dinitrotoluene	0.02		0.1	ND	U	g	0.1	ND	U	g	0.4	ND	U	g
Diethyl Phthalate	0.04		0.1	ND	U	g	0.1	ND	U	g	0.6	ND	U	g
4-Chlorophenyl Phenyl Ether	0.02		0.1	ND	U	g	0.1	ND	U	g	0.3	ND	U	g
Fluorene	0.03		0.1	ND	U	g	0.1	ND	U	g	0.5	ND	U	g
4-Nitroaniline	0.13		0.43	ND	U	g	0.42	ND	U	g	2.1	ND	U	g
4,6-Dinitro-2-Methylphenol	0.09		0.29	ND	U	g	0.28	ND	U	g	1.4	ND	U	g
N-Nitrosodiphenylamine	0.08		0.3	ND	U	g	0.3	ND	U	g	1.3	ND	U	g
4-Bromophenyl Phenyl Ether	0.02		0.1	ND	U	g	0.1	ND	U	g	0.3	ND	U	g
Hexachlorobenzene	0.03		0.1	ND	U	g	0.1	ND	U	g	0.5	ND	U	g
Pentachlorophenol	0.03		0.11	ND	U	g	0.10	ND	U	g	0.52	ND	U	g
Phenanthrene	0.03		0.1	ND	U	g	0.1	ND	U	g	0.5	ND	U	g
Anthracene	0.04		0.1	ND	U	g	0.1	ND	U	g	0.7	ND	U	g
di-n-butyl Phthalate	0.06		0.2	ND	U	g	0.2	ND	U	g	1.0	ND	U	g
Fluroanthene	0.03		0.1	ND	U	g	0.1	ND	U	g	0.5	ND	U	g
Pyrene	0.03		0.1	ND	U	g	0.1	0.1	J		0.5	ND	U	g
Butylbenzylphthalate	0.02		0.1	ND	U	g	0.1	ND	U	g	0.4	ND	U	g
3,3'-Dichlorobenzidine	0.06		0.2	ND	U	g	0.2	ND	U	g	0.9	ND	U	g
Benzo(a)anthracene	0.04		0.1	ND	U	g	0.1	ND	U	g	0.6	ND	U	g
bis(2-Ethylhexyl) Phthalate	0.04		0.1	0.05	B J	a	0.1	0.2	B	a	0.6	ND	U	a
Chrysene	0.05		0.1	ND	U	g	0.1	ND	U	g	0.7	ND	U	g
di-n-Octylphthalate	0.02		0.1	ND	U	g	0.1	ND	U	g	0.4	ND	U	g
Benzo(b)fluoranthene	0.04		0.1	ND	U	g	0.1	ND	U	g	0.7	ND	U	g
Benzo(k)fluoranthene	0.07		0.2	ND	U	g	0.2	ND	U	g	1.2	ND	U	g
Benzo(a)pyrene	0.04		0.1	ND	U	g	0.1	ND	U	g	0.6	ND	U	g
Indeno(1,2,3-c,d)pyrene	0.03		0.1	ND	U	g	0.1	0.04	J		0.4	ND	U	g
Dibenzo(a,h)anthracene	0.02		0.1	ND	U	g	0.1	ND	U	g	0.4	ND	U	g
Benzo(g,h,i)perylene	0.03		0.1	ND	U	g	0.1	0.04	J		0.5	ND	U	g

Base: Kotzebue LRRS						Table 2.2.1							
Site: AOC1						Analytical Data Summary							
Extraction Method: EPA Method 3510						Method AK102							
Analytical Method: Method AK102													
Matrix: Water													
Units: mg/L													
			Environmental Samples										
		Field ID:		AOC1-SW1									
		Batch ID:		H909									
Parameters	MDL		PQL	Result	Validity	Comments							
Diesel Hydrocarbons	0.06		0.11	2.0		g							

Base: Kotzebue LRRS						Table 2.2.2								
Site: AOC1						Analytical Data Summary								
Extraction Method: EPA Method 8260						EPA Method 8260								
Analytical Method: EPA Method 8260														
Matrix: Water														
Units: ug/L														
			Environmental Samples											
		Field ID:		AOC1-SW1										
		Batch ID:		H909										
Parameters	MDL		PQL	Result	Validity	Comments								
Chloromethane	1.03		3	ND	U	g								
Bromomethane	0.42		2	ND	U	g								
Vinyl Chloride	0.52		2	ND	U	g								
Chloroethane	0.59		2	ND	U	g								
Methylene Chloride	0.41		1	ND	U	g								
Acetone	2.90		9	ND	U	g								
Carbon Disulfide	0.40		2	ND	U	g								
1,1-Dichloroethene	0.71		2	ND	U	g								
1,1-Dichloroethane	0.50		2	ND	U	g								
trans-1,2-Dichloroethene	0.42		1	ND	U	g								
cis-1,2-Dichloroethylene	0.43		2	ND	U	g								
Chloroform	0.26		1	ND	U	g								
1,2-Dichloroethane	0.69		2	ND	U	g								
Methyl Ethyl Ketone (2-butanone)	0.52		2	ND	U	g								
1,1,1-Trichloroethane	0.54		2	ND	U	g								
Carbon Tetrachloride	0.42		2	ND	U	g								
Vinyl Acetate	0.52		2	ND	U	g								
Bromodichloromethane	0.44		2	ND	U	g								
1,2-Dichloropropane	0.48		2	ND	U	g								
cis-1,3-Dichloropropene	0.38		1	ND	U	g								
Trichloroethylene (tce)	0.18		1	ND	U	g								
Dibromochloromethane	0.24		1	ND	U	g								
1,1,2-Trichloroethane	0.42		1	ND	U	g								
Benzene	0.42		2	ND	U	g								

Base: Kotzebue LRRS						Table 2.2.2								
Site: AOC1						Analytical Data Summary								
Extraction Method: EPA Method 8260						EPA Method 8260								
Analytical Method: EPA Method 8260														
Matrix: Water														
Units: ug/L														
			Environmental Samples											
		Field ID:		AOC1-SW1										
		Batch ID:		H909										
Parameters	MDL		PQL	Result	Validity	Comments								
trans-1,3-Dichloropropene	0.48		2	ND	U	g								
2-Chloroethyl Vinyl Ether	0.82		3	ND	U	g								
Bromoform	0.48		2	ND	U	g								
Methyl Isobutyl Ketone	1.22		4	ND	U	g								
2-Hexanone	0.72		2	ND	U	g								
Tetrachloroethylene (pce)	0.30		1	ND	U	g								
1,1,2,2-Tetrachloroethane	0.56		2	ND	U	g								
Toluene	0.46		2	ND	U	g								
Chlorobenzene	0.20		1	ND	U	g								
Ethylbenzene	0.28		1	ND	U	g								
Styrene	0.08		1	ND	U	g								
1,1,2-Trichloro-1,2,2-trifluoroethane	0.37		1	ND	U	g								
Xylenes, total	0.68		2	ND	U	g								
1,1,1,2-Tetrachloroethane	0.56		2	ND	U	g								
1,2,3-Trichloropropane	0.41		1	ND	U	g								
Bromochloromethane	0.24		1	ND	U	g								
1-Chlorohexane	1.68		5	ND	U	g								
Bromobenzene	0.43		2	ND	U	g								

ANALYTICAL DATA SUMMARY
SITE SS14-EAST TANKS (AOC3)

Base: Kotzebue LRRS						Table 2.1								
Site: AOC3						Analytical Data Summary								
Extraction Method: Method AK101						Method AK101								
Analytical Method: Method AK101														
Matrix: Soil														
Units: mg/kg														
			Environmental Samples											
		Field ID:		AOC3-SB5-2.0				AOC3-SB6-2.5				AOC3-SB7-2.0		
		Batch ID:		H834				H834				H834		
Parameters	MDL		PQL	Result	Validity	Comments	PQL	Result	Validity	Comments	PQL	Result	Validity	Comments
												Dilution 5		
Gasoline Hydrocarbons	1.7		6.0	740	J	a,b	6.1	17		a	30	4700	J	a,b

Base: Kotzebue LRRS						Table 2.1							
Site: AOC3						Analytical Data Summary							
Extraction Method: Method AK101						Method AK101							
Analytical Method: Method AK101													
Matrix: Soil													
Units: mg/kg													
			Environmental Samples										
		Field ID:	AOC3-SB7-2.0 DUP										
		Batch ID:		H834									
Parameters	MDL		PQL	Result	Validity	Comments							
				Dilution 5									
Gasoline Hydrocarbons	1.7		30	3900		a,b							

Base: Kotzebue LRRS				Table 2.2											
Site: AOC3				Analytical Data Summary											
Extraction Method: EPA Method 3550				Method AK102											
Analytical Method: Method AK102															
Matrix: Soil															
Units: mg/kg															
			Environmental Samples												
		Field ID:		AOC03-SB1-1.5				AOC03-SB2-1.5				AOC03-SB2-1.5DL			
		Batch ID:		H574				H574				H574			
Parameters	MDL		PQL	Result	Validity	Comments	PQL	Result	Validity	Comments	PQL	Result	Validity	Comments	
												Dilution 50			
Diesel Hydrocarbons	0.9		3.1	22		g	3.0	S*	NA	NA	150	5400		g	
* No value reported due to saturation of the detector.															

Base: Kotzebue LRRS						Table 2.2								
Site: AOC3						Analytical Data Summary								
Extraction Method: EPA Method 3550						Method AK102								
Analytical Method: Method AK102														
Matrix: Soil														
Units: mg/kg														
			Environmental Samples											
		Field ID:		AOC03-SB3-3.0			AOC03-SB3-3.0DL				AOC03-SB1-1.5 DUP			
		Batch ID:		H574				H574				H574		
Parameters	MDL		PQL	Result	Validity	Comments	PQL	Result	Validity	Comments	PQL	Result	Validity	Comments
								Dilution 10						
Diesel Hydrocarbons	0.9		3.4	980 E**	J	n	34	1000		g	3.2	22		g
** Analyte detected above linear calibration range.														

Base: Kotzebue LRRS						Table 2.2							
Site: AOC3						Analytical Data Summary							
Extraction Method: EPA Method 3550						Method AK102							
Analytical Method: Method AK102													
Matrix: Soil													
Units: mg/kg													
			Environmental Samples										
		Field ID:	AOC03-SB2-1.5 DUP										
		Batch ID:	H574										
Parameters	MDL		PQL	Result	Validity	Comments							
				Dilution 50									
Diesel Hydrocarbons	0.9		150	6200		g							

Base: Kotzebue LRRS				Table 2.2										
Site: AOC3				Analytical Data Summary										
Extraction Method: EPA Method 3550				Method AK102										
Analytical Method: Method AK102														
Matrix: Soil														
Units: mg/kg														
			Environmental Samples											
		Field ID:		AOC3-SB4-2.5				AOC3-SB5-2.0				AOC3-SB6-2.5		
		Batch ID:		H834				H834				H834		
Parameters	MDL		PQL	Result	Validity	Comments	PQL	Result	Validity	Comments	PQL	Result	Validity	Comments
Diesel Hydrocarbons	0.9		7.7	3.5	J		8.8	300		g	7.6	130		g

Base: Kotzebue LRRS						Table 2.2								
Site: AOC3						Analytical Data Summary								
Extraction Method: EPA Method 3550						Method AK102								
Analytical Method: Method AK102														
Matrix: Soil														
Units: mg/kg														
			Environmental Samples											
		Field ID:		AOC3-SB5-2.0 DUP				AOC3-SB7-2.0				AOC3-SB7-2.0DL		
		Batch ID:		H834				H834				H834		
Parameters	MDL		PQL	Result	Validity	Comments	PQL	Result	Validity	Comments	PQL	Result	Validity	Comments
												Dilution 100		
Diesel Hydrocarbons	0.9		9.2	140		g	7.1	S*	NA	NA	710	10000		g
* No value reported due to saturation of the detector.														

Base: Kotzebue LRRS						Table 2.2							
Site: AOC3						Analytical Data Summary							
Extraction Method: EPA Method 3550						Method AK102							
Analytical Method: Method AK102													
Matrix: Soil													
Units: mg/kg													
			Environmental Samples										
		Field ID:		AOC3-SB8-1.5									
		Batch ID:		H834									
Parameters	MDL		PQL	Result	Validity	Comments							
Diesel Hydrocarbons	0.9		7.9	6.2	J								

Base: Kotzebue LRRS							Table 2.3								
Site: AOC3							Analytical Data Summary								
Extraction Method: EPA Method 3550							EPA Method 8081								
Analytical Method: EPA Method 8081															
Matrix: Soil															
Units: mg/kg															
				Environmental Samples											
			Field ID:		AOC03-SB1-1.5		AOC03-SB1-1.5				AOC03-SB2-1.5		AOC03-SB2-1.5		
			Batch ID:		H574		H574				H574		H574		
	DB-5	DB-608		DB-5	DB-5	DB-608	DB-608			DB-5	DB-5	DB-608	DB-608		
Parameters	MDL	MDL		PQL	Result	PQL	Result	Validity	Comments	PQL	Result	PQL	Result	Validity	Comments
alpha BHC	0.0001	0.0001		0.00022	ND	0.00020	ND	U	g	0.00022	ND	0.00019	ND	U	g
beta BHC	0.0001	0.0001		0.00034	ND	0.00032	ND	U	g	0.00033	0.0026	0.00031	0.0023	J	n
delta BHC	0.0001	0.0001		0.00035	0.022	0.00026	ND	U	h	0.00034	ND	0.00025	ND	U	g
gamma BHC (Lindane)	0.0001	0.0001		0.00028	0.0011	0.00023	ND	U	h	0.00027	0.0025	0.00022	ND	U	h
Heptachlor	0.0001	0.0001		0.0003	ND	0.0003	ND	U	g	0.0003	0.0022	0.0003	0.0010	J	n
Aldrin	0.0007	0.0001		0.00022	ND	0.00028	ND	U	g	0.00021	ND	0.00027	ND	U	g
Heptachlor Epoxide	0.0001	0.0001		0.00028	0.089	0.00035	ND	U	h,k	0.00027	0.0056	0.00034	0.0021	J	n
Endosulfan I	0.0001	0.0001		0.00040	ND	0.00040	ND	U	g	0.00039	0.00036	0.00039	0.0012	J	n
Dieldrin	0.0001	0.0002		0.0004	ND	0.0005	ND	U	g	0.0004	ND	0.0005	ND	U	g
4,4'-DDE	0.0001	0.0002		0.0004	0.0020	0.0005	0.0025		g	0.0003	0.0052	0.0005	0.0055		g
Endrin	0.0001	0.0001		0.0004	ND	0.0004	ND	U	g	0.0003	0.0005	0.0004	0.0029	J	n
Endosulfan II	0.0002	0.0002		0.0006	ND	0.0006	ND	U	g	0.0006	ND	0.0005	ND	U	g
4,4'-DDD	0.0001	0.0001		0.0004	0.0016	0.0005	ND	U	h,k	0.0004	0.018	0.0005	0.035		k
Endosulfan Sulfate	0.0002	0.0002		0.0009	ND	0.0009	ND	U	g	0.0008	ND	0.0008	ND	U	g
4,4'-DDT	0.0002	0.0001		0.0008	0.0031	0.0005	0.0020		g	0.0008	0.086 E*	0.0005	0.077 *	J	n
Methoxychlor	0.0008	0.0011		0.0030	ND	0.0038	ND	U	g	0.0029	0.0019	0.0037	0.0032	J	n
Endrin Aldehyde	0.0002	0.0003		0.0008	ND	0.0009	ND	U	g	0.0008	0.0027	0.0009	0.0018	J	n
gamma-Chlordane	0.0001	0.0001		0.00019	ND	0.00028	ND	U	g	0.00018	0.0045	0.00027	0.0015	J	n
alpha-Chlordane	0.0001	0.0001		0.00022	ND	0.00040	ND	U	g	0.00022	0.00054	0.00039	ND	U	h
Toxaphene	0.007	0.009		0.03	ND	0.03	ND	U	g	0.03	ND	0.03	ND	U	g
Arochlor 1016	0.009	0.009		0.03	ND	0.03	ND	U	g	0.03	ND	0.03	ND	U	g
Arochlor 1242	0.005	0.008		0.02	ND	0.03	ND	U	g	0.02	ND	0.03	ND	U	g
Arochlor 1248	0.004	0.005		0.01	ND	0.02	ND	U	g	0.01	ND	0.02	ND	U	g
Arochlor 1254	0.011	0.009		0.04	ND	0.03	ND	U	g	0.04	ND	0.03	ND	U	g
Arochlor 1260	0.009	0.010		0.03	ND	0.02	ND	U	g	0.03	ND	0.02	ND	U	g
Arochlor 1221	0.011	0.010		0.04	ND	0.03	ND	U	g	0.04	ND	0.03	ND	U	g
Arochlor 1232	0.005	0.005		0.02	ND	0.00	ND	U	g	0.02	ND	0.00	ND	U	g

* Analyte detected above linear calibration range.

Base: Kotzebue LRRS						Table 2.3									
Site: AOC3						Analytical Data Summary									
Extraction Method: EPA Method 3550						EPA Method 8081									
Analytical Method: EPA Method 8081															
Matrix: Soil															
Units: mg/kg															
				Environmental Samples											
			Field ID:	AOC03-SB2-1.5DL		AOC03-SB2-1.5DL					AOC03-SB3-3.0		AOC03-SB3-3.0		
			Batch ID:		H574		H574				H574		H574		
	DB-5	DB-608		DB-5	DB-5	DB-608	DB-608			DB-5	DB-5	DB-608	DB-608		
Parameters	MDL	MDL		PQL	Result	PQL	Result	Validity	Comments	PQL	Result	PQL	Result	Validity	Comments
					Dilution 10		Dilution 10								
alpha BHC	0.0001	0.0001		0.0022	0.017	0.0019	ND	U	h	0.00024	ND	0.00021	ND	U	g
beta BHC	0.0001	0.0001		0.0033	0.0064	0.0031	ND	U	h	0.00036	0.0015	0.00034	0.00094	J	n
delta BHC	0.0001	0.0001		0.0034	0.026	0.0025	0.014	J	n	0.00037	0.11	0.00028	0.0020	J	n
gamma BHC (Lindane)	0.0001	0.0001		0.0027	0.0093	0.0022	ND	U	h	0.00029	0.0019	0.00024	0.0021	J	n
Heptachlor	0.0001	0.0001		0.0030	ND	0.0030	ND	U	g	0.0003	0.0008	0.0003	ND	U	h
Aldrin	0.0001	0.0001		0.0021	ND	0.0027	ND	U	g	0.00023	ND	0.00030	ND	U	g
Heptachlor Epoxide	0.0001	0.0001		0.0027	0.063	0.0034	ND	U	h,k	0.00029	0.46	0.00037	ND	U	h,k
Endosulfan I	0.0001	0.0001		0.0039	ND	0.0039	ND	U	g	0.00042	ND	0.00042	ND	U	g
Dieldrin	0.0001	0.0002		0.0042	ND	0.0051	ND	U	g	0.0005	ND	0.0006	ND	U	g
4,4'-DDE	0.0001	0.0002		0.0034	0.021	0.0051	0.015		g	0.0004	0.0055	0.0006	0.0034		g
Endrin	0.0001	0.0001		0.0034	0.0054	0.0035	ND	U	h	0.0004	ND	0.0004	ND	U	g
Endosulfan II	0.0002	0.0002		0.0056	0.013	0.0054	ND	U	h	0.0006	ND	0.0006	ND	U	g
4,4'-DDD	0.0001	0.0001		0.0042	0.033	0.0049	0.036		k	0.0005	0.0083	0.0005	0.014		k
Endosulfan Sulfate	0.0002	0.0002		0.0085	ND	0.0085	ND	U	g	0.0009	ND	0.0009	ND	U	g
4,4'-DDT	0.0002	0.0001		0.0079	0.083	0.0045	0.069		g	0.0009	0.095 E*	0.0005	0.076 E*	J	n
Methoxychlor	0.0008	0.0001		0.029	ND	0.037	ND	U	g	0.0032	0.0035	0.0041	ND	U	h
Endrin Aldehyde	0.0002	0.0003		0.0077	0.0043	0.0090	ND	U	h	0.0008	ND	0.0010	ND	U	g
gamma-Chlordane	0.0001	0.0001		0.0018	0.0054	0.0027	ND	U	h	0.00020	0.0012	0.00030	0.00020	J	n
alpha-Chlordane	0.0001	0.0001		0.0022	ND	0.0039	ND	U	g	0.00024	0.0014	0.00043	0.0010	J	n
Toxaphene	0.009	0.009		0.25	ND	0.31	ND	U	g	0.03	ND	0.03	ND	U	g
Arochlor 1016	0.009	0.009		0.30	ND	0.29	ND	U	g	0.03	ND	0.03	ND	U	g
Arochlor 1242	0.005	0.008		0.18	ND	0.26	ND	U	g	0.02	ND	0.03	ND	U	g
Arochlor 1248	0.004	0.005		0.12	ND	0.16	ND	U	g	0.01	ND	0.02	ND	U	g
Arochlor 1254	0.011	0.009		0.37	ND	0.31	ND	U	g	0.04	ND	0.03	ND	U	g
Arochlor 1260	0.009	0.010		0.30	ND	0.16	ND	U	g	0.03	ND	0.02	ND	U	g
Arochlor 1221	0.011	0.010		0.36	ND	0.33	ND	U	g	0.04	ND	0.04	ND	U	g
Arochlor 1232	0.005	0.005		0.16	ND	0.02	ND	U	g	0.02	ND	0.00	ND	U	g
* Analyte detected above linear calibration range.															

Base: Kotzebue LRRS						Table 2.3								
Site: AOC3						Analytical Data Summary								
Extraction Method: EPA Method 3550						EPA Method 8081								
Analytical Method: EPA Method 8081														
Matrix: Soil														
Units: mg/kg														
				Environmental Samples										
			Field ID:	AOC03-SB3-3.0DL		AOC03-SB3-3.0DL								
			Batch ID:		H574		H574							
	DB-5	DB-608		DB-5	DB-5	DB-608	DB-608							
Parameters	MDL	MDL		PQL	Result	PQL	Result	Validity	Comments					
					Dilution 10		Dilution 10							
alpha BHC	0.0001	0.0001		0.0024	0.018	0.0021	ND	U	h					
beta BHC	0.0001	0.0001		0.0036	ND	0.0034	ND	U	g					
delta BHC	0.0001	0.0001		0.0037	0.23	0.0028	ND	U	h					
gamma BHC (Lindane)	0.0001	0.0001		0.0029	ND	0.0024	ND	U	g					
Heptachlor	0.0001	0.0001		0.0033	ND	0.0033	ND	U	g					
Aldrin	0.0001	0.0001		0.0023	ND	0.0030	ND	U	g					
Heptachlor Epoxide	0.0001	0.0001		0.0029	0.74	0.0037	ND	U	h,k					
Endosulfan I	0.0001	0.0001		0.0042	ND	0.0042	ND	U	g					
Dieldrin	0.0001	0.0002		0.0045	ND	0.0056	ND	U	g					
4,4'-DDE	0.0001	0.0002		0.0037	0.018	0.0056	0.023		g					
Endrin	0.0001	0.0001		0.0037	ND	0.0039	ND	U	g					
Endosulfan II	0.0002	0.0002		0.0061	0.0062	0.0059	ND	U	h					
4,4'-DDD	0.0001	0.0001		0.0045	0.015	0.0054	0.018		k					
Endosulfan Sulfate	0.0002	0.0002		0.0093	ND	0.0093	ND	U	g					
4,4'-DDT	0.0002	0.0001		0.0086	0.088	0.0049	0.072		g					
Methoxychlor	0.0008	0.0001		0.032	ND	0.041	ND	U	g					
Endrin Aldehyde	0.0002	0.0003		0.0084	ND	0.0099	ND	U	g					
gamma-Chlordane	0.0001	0.0001		0.0020	ND	0.0030	ND	U	g					
alpha-Chlordane	0.0001	0.0001		0.0024	ND	0.0043	ND	U	g					
Toxaphene	0.009	0.009		0.28	ND	0.34	ND	U	g					
Arochlor 1016	0.009	0.009		0.33	ND	0.32	ND	U	g					
Arochlor 1242	0.005	0.008		0.20	ND	0.29	ND	U	g					
Arochlor 1248	0.004	0.005		0.13	ND	0.18	ND	U	g					
Arochlor 1254	0.011	0.009		0.40	ND	0.34	ND	U	g					
Arochlor 1260	0.009	0.010		0.32	ND	0.17	ND	U	g					
Arochlor 1221	0.011	0.010		0.40	ND	0.36	ND	U	g					
Arochlor 1232	0.005	0.005		0.17	ND	0.02	ND	U	g					

Base: Kotzebue LRRS						Table 2.4								
Site: AOC3						Analytical Data Summary								
Extraction Method: EPA Method 8260						EPA Method 8260								
Analytical Method: EPA Method 8260														
Matrix: Soil														
Units: mg/kg														
			Environmental Samples											
		Field ID:		AOC03-SB1-1.5				AOC03-SB2-1.5				AOC03-SB3-3.0		
		Batch ID:		H574				H574				H574		
Parameters	MDL		PQL	Result	Validity	Comments	PQL	Result	Validity	Comments	PQL	Result	Validity	Comments
Chloromethane	0.0009		0.004	ND	U	g	0.37	ND	U	g	0.004	ND	U	g
Bromomethane	0.0008		0.004	ND	U	g	0.34	ND	U	g	0.004	ND	U	g
Vinyl Chloride	0.0010		0.005	ND	U	g	0.40	ND	U	g	0.005	ND	U	g
Chloroethane	0.0010		0.005	ND	U	g	0.42	ND	U	g	0.005	ND	U	g
Methylene Chloride	0.0009		0.004	0.004	B J	a	0.36	0.26	B J	a	0.004	0.004	B J	a
Acetone	0.0039		0.02	0.01	B J	k	1.6	0.66	B J	k	0.02	0.02	B J	k
Carbon Disulfide	0.0005		0.003	ND	U	g	0.23	ND	U	g	0.003	ND	U	g
1,1-Dichloroethene	0.0012		0.006	ND	U	g	0.48	ND	U	g	0.006	ND	U	g
1,1-Dichloroethane	0.0004		0.002	ND	U	g	0.15	ND	U	g	0.002	ND	U	g
trans-1,2-Dichloroethene	0.0009		0.004	ND	U	g	0.37	ND	U	g	0.004	ND	U	g
cis-1,2-Dichloroethylene	0.0011		0.006	ND	U	g	0.48	ND	U	g	0.006	ND	U	g
Chloroform	0.0005		0.002	ND	U	g	0.19	ND	U	g	0.002	ND	U	g
1,2-Dichloroethane	0.0005		0.002	ND	U	g	0.21	ND	U	g	0.003	ND	U	g
Methyl Ethyl Ketone (2-butanone)	0.0025		0.012	ND	U	g	1.0	0.37	J		0.013	0.005	J	
1,1,1-Trichloroethane	0.0004		0.002	ND	U	g	0.18	ND	U	g	0.002	ND	U	g
Carbon Tetrachloride	0.0010		0.005	ND	U	g	0.41	ND	U	g	0.005	ND	U	g
Vinyl Acetate	0.0016		0.008	ND	U	g	0.67	ND	U	g	0.008	ND	U	g
Bromodichloromethane	0.0006		0.003	ND	U	g	0.27	ND	U	g	0.003	ND	U	g
1,2-Dichloropropane	0.0008		0.004	ND	U	g	0.35	ND	U	g	0.004	ND	U	g
cis-1,3-Dichloropropene	0.0007		0.003	ND	U	g	0.29	ND	U	g	0.004	ND	U	g
Trichloroethylene (tce)	0.0005		0.003	ND	U	g	0.23	ND	U	g	0.003	ND	U	g
Dibromochloromethane	0.0003		0.002	ND	U	g	0.14	ND	U	g	0.002	ND	U	g
1,1,2-Trichloroethane	0.0007		0.003	ND	U	g	0.29	ND	U	g	0.004	ND	U	g
Benzene	0.0005		0.0024	ND	U	g	0.20	ND	U	g	0.0024	ND	U	g

Base: Kotzebue LRRS						Table 2.4								
Site: AOC3						Analytical Data Summary								
Extraction Method: EPA Method 8260						EPA Method 8260								
Analytical Method: EPA Method 8260														
Matrix: Soil														
Units: mg/kg														
			Environmental Samples											
		Field ID:		AOC03-SB1-1.5				AOC03-SB2-1.5				AOC03-SB3-3.0		
		Batch ID:		H574				H574				H574		
Parameters	MDL		PQL	Result	Validity	Comments	PQL	Result	Validity	Comments	PQL	Result	Validity	Comments
trans-1,3-Dichloropropene	0.0005		0.003	ND	U	g	0.22	ND	U	g	0.003	ND	U	g
2-Chloroethyl Vinyl Ether	0.0006		0.003	ND	U	g	0.27	ND	U	g	0.003	ND	U	g
Bromoform	0.0013		0.006	ND	U	g	0.53	ND	U	g	0.006	ND	U	g
Methyl Isobutyl Ketone	0.0015		0.008	ND	U	g	0.63	ND	U	g	0.008	ND	U	g
2-Hexanone	0.0027		0.014	ND	U	g	1.1	ND	U	g	0.014	ND	U	g
Tetrachloroethylene (pce)	0.0009		0.004	ND	U	g	0.38	ND	U	g	0.005	ND	U	g
1,1,2,2-Tetrachloroethane	0.0009		0.0046	ND	U	g	0.38	ND	U	g	0.0046	ND	U	g
Toluene	0.0009		0.0046	ND	U	k	0.38	ND	U	k	0.0046	ND	U	k
Chlorobenzene	0.0007		0.004	ND	U	g	0.30	ND	U	g	0.004	ND	U	g
Ethylbenzene	0.0004		0.0022	ND	U	g	0.18	ND	U	g	0.0022	ND	U	g
Styrene	0.0006		0.003	ND	U	g	0.27	ND	U	g	0.003	ND	U	g
1,1,2-Trichloro-1,2,2-trifluoroethane	0.0007		0.004	ND	U	g	0.31	ND	U	g	0.004	ND	U	g
Xylenes, total	0.0020		0.010	ND	U	g	0.84	0.88		g	0.010	ND	U	g
1,1,1,2-Tetrachloroethane	0.0010		0.005	ND	U	g	0.42	ND	U	g	0.005	ND	U	g
1,2,3-Trichloropropane	0.0023		0.011	ND	U	g	0.94	ND	U	g	0.011	ND	U	g
Bromochloromethane	0.0007		0.003	ND	U	g	0.28	ND	U	g	0.003	ND	U	g
1-Chlorohexane	0.0007		0.003	ND	U	g	0.27	ND	U	g	0.003	ND	U	g
Bromobenzene	0.0007		0.0036	ND	U	g	0.30	ND	U	g	0.0037	ND	U	g

Base: Kotzebue LRRS
Site: AOC3
Extraction Method: EPA Method 3550
Analytical Method: EPA Method 8270
Matrix: Soil
Units: mg/kg

Table 10.2.1.5
Analytical Data Summary
EPA Method 8270

			Environmental Samples											
		Field ID:		AOC03-SB1-1.5				AOC03-SB2-1.5				AOC03-SB3-3.0		
		Batch ID:		H574				H574				H574		
Parameters	MDL		PQL	Result	Validity	Comments	PQL	Result	Validity	Comments	PQL	Result	Validity	Comments
Phenol	0.05		0.2	ND	U	g	1.8	ND	U	g	0.2	ND	U	g
bis(2-Chloroethyl) Ether	0.04		0.1	ND	U	g	1.3	ND	U	g	0.1	ND	U	g
2-Chlorophenol	0.07		0.2	ND	U	g	2.4	ND	U	g	0.3	ND	U	g
1,3-Dichlorobenzene	0.04		0.1	ND	U	k	1.3	ND	U	k	0.1	ND	U	k
1,4-Dichlorobenzene	0.03		0.1	ND	U	g	0.9	ND	U	g	0.1	ND	U	g
Benzyl Alcohol	0.05		0.2	ND	U	g	1.8	ND	U	g	0.2	ND	U	g
1,2-Dichlorobenzene	0.04		0.1	ND	U	g	1.3	ND	U	g	0.1	ND	U	g
2-Methylphenol	0.10		0.3	ND	U	g	3.4	ND	U	g	0.4	ND	U	g
2,2'-Oxybis (1-Chloropropane)	0.03		0.1	ND	U	g	1.1	ND	U	g	0.1	ND	U	g
4-Methylphenol	0.08		0.2	ND	U	g	2.6	ND	U	g	0.3	ND	U	g
N-Nitrosodi-n-propylamine	0.03		0.1	ND	U	g	0.9	ND	U	g	0.1	ND	U	g
Hexachloroethane	0.04		0.1	ND	U	g	1.3	ND	U	g	0.1	ND	U	g
Nitrobenzene	0.02		0.1	ND	U	g	0.8	ND	U	g	0.1	ND	U	g
Isophorone	0.03		0.1	ND	U	g	1.1	ND	U	g	0.1	ND	U	g
2-Nitrophenol	0.03		0.1	ND	U	g	1.2	ND	U	g	0.1	ND	U	g
2,4-Dimethylphenol	0.17		0.3	ND	U	g	3.2	ND	U	g	0.3	ND	U	g
Benzoic Acid	0.06		0.18	ND	U	g	1.9	ND	U	g	0.21	ND	U	g
bis(2-Chloroethoxy) Methane	0.04		0.1	ND	U	g	1.2	ND	U	g	0.1	ND	U	g
2,4-Dichlorophenol	0.04		0.1	ND	U	g	1.5	ND	U	g	0.2	ND	U	g
1,2,4-Trichlorobenzene	0.03		0.1	ND	U	g	1.1	ND	U	g	0.1	ND	U	g
Naphthalene	0.04		0.1	ND	U	g	1.5	ND	U	g	0.1	ND	U	g
4-Chloroaniline	0.10		0.3	ND	U	g	3.5	ND	U	g	0.4	ND	U	g
Hexachlorobutadiene	0.03		0.1	ND	U	g	1.2	ND	U	g	0.1	ND	U	g
4-Chloro-3-Methylphenol	0.06		0.2	ND	U	g	2.0	ND	U	g	0.2	ND	U	g
2-Methylnaphthalene	0.03		0.1	ND	U	g	1.2	11		g	0.1	ND	U	g
Hexachlorocyclopentadiene	0.03		0.1	ND	U	g	0.9	ND	U	g	0.1	ND	U	g
2,4,6-Trichlorophenol	0.04		0.1	ND	U	g	1.5	ND	U	g	0.2	ND	U	g
2,4,5-Trichlorophenol	0.03		0.08	ND	U	g	0.86	ND	U	g	0.09	ND	U	g
2-Chloronaphthalene	0.03		0.1	ND	U	g	1.1	ND	U	g	0.1	ND	U	g
2-Nitroaniline	0.02		0.06	ND	U	g	0.65	ND	U	g	0.07	ND	U	g
Dimethyl Phthalate	0.04		0.1	ND	U	g	1.2	ND	U	g	0.1	ND	U	g
Acenaphthylene	0.04		0.1	ND	U	g	1.4	ND	U	g	0.1	ND	U	g
3-Nitroaniline	0.11		0.35	ND	U	g	3.8	ND	U	g	0.40	ND	U	g
Acenaphthene	0.03		0.1	ND	U	g	1.0	ND	U	g	0.1	ND	U	g
2,4-Dinitrophenol	0.09		0.28	ND	U	g	3.0	ND	U	g	0.33	ND	U	g
4-Nitrophenol	0.07		0.21	ND	U	g	2.3	ND	U	g	0.24	ND	U	g
Dibenzofuran	0.03		0.1	ND	U	g	1.1	ND	U	g	0.1	ND	U	g
2,6-Dinitrotoluene	0.04		0.1	ND	U	g	1.4	ND	U	g	0.2	ND	U	g

Base: Kotzebue LRRS						Table 10.2.1.6								
Site: AOC3						Analytical Data Summary								
Extraction Method: EPA Method 3550						EPA Method 8270								
Analytical Method: EPA Method 8270														
Matrix: Soil														
Units: mg/kg														
			Environmental Samples											
		Field ID:		AOC03-SB1-1.5				AOC03-SB2-1.5				AOC03-SB3-3.0		
		Batch ID:		H574				H574				H574		
Parameters	MDL		PQL	Result	Validity	Comments	PQL	Result	Validity	Comments	PQL	Result	Validity	Comments
2,4-Dinitrotoluene	0.02		0.1	ND	U	g	0.8	ND	U	g	0.1	ND	U	g
Diethyl Phthalate	0.04		0.1	ND	U	g	1.2	ND	U	g	0.1	ND	U	g
4-Chlorophenyl Phenyl Ether	0.02		0.1	ND	U	g	0.7	ND	U	g	0.1	ND	U	g
Fluorene	0.03		0.1	ND	U	g	1.0	ND	U	g	0.1	ND	U	g
4-Nitroaniline	0.13		0.41	ND	U	g	4.5	ND	U	g	0.49	ND	U	g
4,6-Dinitro-2-Methylphenol	0.09		0.28	ND	U	g	3.0	ND	U	g	0.33	ND	U	g
N-Nitrosodiphenylamine	0.08		0.3	ND	U	g	2.9	ND	U	g	0.3	ND	U	g
4-Bromophenyl Phenyl Ether	0.02		0.1	ND	U	g	0.7	ND	U	g	0.1	ND	U	g
Hexachlorobenzene	0.03		0.1	ND	U	g	1.1	ND	U	g	0.1	ND	U	g
Pentachlorophenol	0.03		0.10	ND	U	g	1.1	ND	U	g	0.12	ND	U	g
Phenanthrene	0.03		0.1	ND	U	g	1.1	ND	U	g	0.1	ND	U	g
Anthracene	0.04		0.1	ND	U	g	1.5	ND	U	g	0.2	ND	U	g
di-n-butyl Phthalate	0.06		0.2	ND	U	g	2.1	ND	U	g	0.2	ND	U	g
Fluroanthene	0.03		0.1	ND	U	g	1.2	ND	U	g	0.1	ND	U	g
Pyrene	0.03		0.1	ND	U	g	1.0	ND	U	g	0.1	ND	U	g
Butylbenzylphthalate	0.02		0.1	ND	U	g	0.8	ND	U	g	0.1	ND	U	g
3,3'-Dichlorobenzidine	0.06		0.2	ND	U	g	2.0	ND	U	g	0.2	ND	U	g
Benzo(a)anthracene	0.04		0.1	ND	U	g	1.3	ND	U	g	0.1	ND	U	g
bis(2-Ethylhexyl) Phthalate	0.04		0.1	ND	U	g	1.4	ND	U	g	0.1	ND	U	g
Chrysene	0.05		0.1	ND	U	g	1.5	ND	U	g	0.2	ND	U	g
di-n-Octylphthalate	0.02		0.1	ND	U	g	0.8	ND	U	g	0.1	ND	U	g
Benzo(b)fluoranthene	0.04		0.1	ND	U	g	1.5	ND	U	g	0.2	ND	U	g
Benzo(k)fluoranthene	0.07		0.2	ND	U	g	2.6	ND	U	g	0.3	ND	U	g
Benzo(a)pyrene	0.04		0.1	ND	U	g	1.4	ND	U	g	0.1	ND	U	g
Indeno(1,2,3-c,d)pyrene	0.03		0.1	ND	U	g	0.9	ND	U	g	0.1	ND	U	g
Dibenzo(a,h)anthracene	0.02		0.1	ND	U	g	0.8	ND	U	g	0.1	ND	U	g
Benzo(g,h,i)perylene	0.03		0.1	ND	U	g	1.1	ND	U	g	0.1	ND	U	g

ANALYTICAL DATA SUMMARY
SITE SS15-GARAGE/POWER PLANT (AOC4)

Base: Kotzebue LRRS						Table 2.1								
Site: AOC4						Analytical Data Summary								
Extraction Method: Method AK101						Method AK101								
Analytical Method: Method AK101														
Matrix: Soil														
Units: mg/kg														
			Environmental Samples											
		Field ID:		AOC-4-SB2				AOC-4-SB3				AOC-4-SB4		
		Batch ID:		H746				H746				H746		
Parameters	MDL		PQL	Result	Validity	Comments	PQL	Result	Validity	Comments	PQL	Result	Validity	Comments
Gasoline Hydrocarbons	1.7		6.3	ND	U	g	6.1	4.3	J		6.1	950	J	b

Base: Kotzebue LRRS						Table 2.1							
Site: AOC4						Analytical Data Summary							
Extraction Method: Method AK101						Method AK101							
Analytical Method: Method AK101													
Matrix: Soil													
Units: mg/kg													
			Environmental Samples										
		Field ID:		AOC-4-SB5									
		Batch ID:		H746									
Parameters	MDL		PQL	Result	Validity	Comments							
Gasoline Hydrocarbons	1.7		6.3	950	J	b							

Base: Kotzebue LRRS
Site: AOC4
Extraction Method: EPA Method 3550
Analytical Method: Method AK102
Matrix: Soil
Units: mg/kg

Table 2.2
Analytical Data Summary
Method AK102

			Environmental Samples											
		Field ID:		AOC4-SB1-7.0				AOC4-SB1-7.0			AOC4-SB1-7.0 DUP			
		Batch ID:		H671				H671				H671		
Parameters	MDL		PQL	Result	Validity	Comments	PQL	Result	Validity	Comments	PQL	Result	Validity	Comments
								Dilution 10						
Diesel Hydrocarbons	0.9		6.9	2100 E*	J	n	69	1800		g	71	1600		g
AK102-Extended	NA		NA	5200*		g	NA	7900		g	NA	NA	NA	NA

* Analyte detected above linear calibration range.

Base: Kotzebue LRRS							Table 2.2							
Site: AOC4							Analytical Data Summary							
Extraction Method: EPA Method 3550							Method AK102							
Analytical Method: Method AK102														
Matrix: Soil														
Units: mg/kg														
			Environmental Samples											
		Field ID:		AOC-4-SB2					AOC-4-SB3				AOC-4-SB4	
		Batch ID:		H746					H746				H746	
Parameters	MDL		PQL	Result	Validity	Comments	PQL	Result	Validity	Comments	PQL	Result	Validity	Comments
Diesel Hydrocarbons	0.9		9.2	18		g	8.0	ND	U	g	8.5	4600 E**	J	n
** Analyte detected above linear calibration range.														

Base: Kotzebue LRRS						Table 2.2								
Site: AOC4						Analytical Data Summary								
Extraction Method: EPA Method 3550						Method AK102								
Analytical Method: Method AK102														
Matrix: Soil														
Units: mg/kg														
			Environmental Samples											
		Field ID:		AOC-4-SB4DL				AOC-4-SB5				AOC-4-SB5DL		
		Batch ID:		H746				H746				H746		
Parameters	MDL		PQL	Result	Validity	Comments	PQL	Result	Validity	Comments	PQL	Result	Validity	Comments
				Dilution 10								Dilution 50		
Diesel Hydrocarbons	0.9		85	4300		g	8.0	S*	NA	NA	400	10000		g
AK102 Extended	NA		NA	NA	NA	NA	NA	1100		g	NA	NA	NA	NA
* No value reported due to saturation of the detector.														

Base: Kotzebue LRRS						Table 2.2								
Site: AOC4						Analytical Data Summary								
Extraction Method: EPA Method 3550						Method AK102								
Analytical Method: Method AK102														
Matrix: Soil														
Units: mg/kg														
			Environmental Samples											
		Field ID:		AOC4-SB6-2.5										
		Batch ID:		H834										
Parameters	MDL		PQL	Result	Validity	Comments								
Diesel Hydrocarbons	0.9		7.5	9.4		g								

Base: Kotzebue LRRS						Table 2.2								
Site: AOC4						Analytical Data Summary								
Extraction Method: EPA Method 3550						Method AK102								
Analytical Method: Method AK102														
Matrix: Soil														
Units: mg/kg														
			Environmental Samples											
		Field ID:		AOC4-SB8-2.0**				AOC4-SB7-6.3						
		Batch ID:		H886				H886						
Parameters	MDL		PQL	Result	Validity	Comments	PQL	Result	Validity	Comments				
Diesel Hydrocarbons	0.9		7.6	3.7	J		9.2	11		g				
** Revised sample ID per Fax from Rick Osgood dated 8/10/94.														

Base: Kotzebue LRRS				Table 2.3						
Site: AOC4				Analytical Data Summary						
Extraction Method: EPA Method 3050				EPA Method 6010						
Analytical Method: EPA Method 6010										
Matrix: Soil										
Units: mg/kg										
			Environmental Samples							
		Field ID:		AOC-4-SB2				AOC-4-SB4		
		Batch ID:		H746				H746		
Parameters	MDL		PQL	Result	Validity	Comments	PQL	Result	Validity	Comments
				Dilution 100				Dilution 100		
Aluminum	0.96		3	7700	J	a,c	3	6600	J	a,c
Antimony	3.2		10	ND	UJ	c	10	ND	UJ	c
Arsenic	2.8		10	7	J		10	8	J	
Barium	0.43		2	130		g	2	110		g
Beryllium	0.019		0.1	0.1		g	0.1	0.1		g
Cadmium	0.56		2	ND	U	g	2	ND	U	g
Calcium	2.1		8	14000	J	c	8	17000	J	c
Chromium, total	0.19		0.7	12		g	0.7	13		g
Cobalt	0.28		1	8		g	1	6		g
Copper	0.077		0.3	11	J	a,c	0.3	12	J	a,c
Iron	0.58		2	15000	J	c	2	12000	J	c
Magnesium	1.3		5	9600	J	c	5	9200	J	c
Manganese	0.32		1	320	J	c	1	210	J	c
Molybdenum	0.21		0.8	ND	U	g	0.8	ND	U	g
Nickel	0.57		2	27		g	2	31		g
Potassium	16		60	300		g	60	240		g
Selenium	3.2		10	5	J		10	5	J	
Silver	0.13		0.5	ND	U	g	0.5	ND	U	g
Sodium	6.5		20	170		g	20	180		g
Thallium	1.3		5	7		g	5	6		g
Vanadium	0.12		0.4	31	J	c	0.4	24	J	c
Zinc	0.22		0.9	27		a	0.9	26		a

Base: Kotzebue LRRS					Table 2.4						
Site: AOC4					Analytical Data Summary						
Extraction Method: See below					EPA Method 7000						
Analytical Method: See below											
Matrix: Soil											
Units: mg/kg											
				Environmental Samples							
			Field ID:		AOC-4-SB2				AOC-4-SB4		
	EPA		Batch ID:		H746				H746		
Parameters	Method	MDL		PQL	Result	Validity	Comments	PQL	Result	Validity	Comments
					Dilution 100				Dilution 100		
Lead	3050/7421	0.12		0.4	3.3		g	0.4	3.8		g
Mercury	7471	0.0020		0.03	ND	U	g	0.03	0.01	J	

Base: Kotzebue LRRS							Table 2.5			
Site: AOC4							Analytical Data Summary			
Extraction Method: EPA Method 3550							EPA Method 8081			
Analytical Method: EPA Method 8081										
Matrix: Soil										
Units: mg/kg										
				Environmental Samples						
			Field ID:		AOC4-SB1-7.0		AOC4-SB1-7.0			
			Batch ID:		H671		H671			
	DB-5	DB-608		DB-5	DB-5	DB-608	DB-608			
Parameters	MDL	MDL		PQL	Result	PQL	Result	Validity	Comments	
alpha BHC	0.0001	0.0001		0.00022	0.0018	0.00019	0.0016		g	
beta BHC	0.0001	0.0001		0.00033	0.0022	0.00031	ND	U	d,h	
delta BHC	0.0001	0.0001		0.00034	0.0094	0.00025	0.0023	J	c,d,n	
gamma BHC (Lindane)	0.0001	0.0001		0.00027	0.0018	0.00022	0.0031	J	n	
Heptachlor	0.0001	0.0001		0.0003	0.0003	0.0003	0.0010	J	n	
Aldrin	0.0001	0.0001		0.00021	0.0019	0.00028	0.0030	J	n	
Heptachlor Epoxide	0.0001	0.0001		0.00027	0.055	0.00034	0.0010	J	a,n	
Endosulfan I	0.0001	0.0001		0.00039	ND	0.00039	ND	U	g	
Dieldrin	0.0001	0.0002		0.0004	ND	0.0005	ND	U	g	
4,4'-DDE	0.0001	0.0002		0.0003	0.0039	0.0005	0.0037	B	a	
Endrin	0.0001	0.0001		0.0003	ND	0.0004	ND	U	g	
Endosulfan II	0.0002	0.0002		0.0006	ND	0.0005	ND	U	a	
4,4'-DDD	0.0001	0.0001		0.0004	0.015	0.0005	0.018		g	
Endosulfan Sulfate	0.0002	0.0002		0.0009	ND	0.0009	ND	U	g	
4,4'-DDT	0.0002	0.0001		0.0008	0.0061	0.0005	0.0059		g	
Methoxychlor	0.0008	0.0011		0.0030	ND	0.0037	ND	U	g	
Endrin Aldehyde	0.0002	0.0003		0.0008	ND	0.0009	ND	U	a	
gamma-Chlordane	0.0001	0.0001		0.00019	ND	0.00028	ND	U	g	
alpha-Chlordane	0.0001	0.0001		0.00022	0.0011	0.00039	0.0011	J	n	
Toxaphene	0.007	0.009		0.03	ND	0.03	ND	U	g	
Arochlor 1016	0.009	0.009		0.03	ND	0.03	ND	U	g	
Arochlor 1242	0.005	0.008		0.02	ND	0.03	ND	U	g	
Arochlor 1248	0.004	0.005		0.01	ND	0.02	ND	U	g	
Arochlor 1254	0.011	0.009		0.04	ND	0.03	ND	U	g	
Arochlor 1260	0.009	0.010		0.03	ND	0.02	ND	U	g	
Arochlor 1221	0.011	0.010		0.04	ND	0.03	ND	U	g	
Arochlor 1232	0.005	0.005		0.02	ND	0.00	ND	U	g	

Base: Kotzebue LRRS						Table 2.5									
Site: AOC4						Analytical Data Summary									
Extraction Method: EPA Method 3550						EPA Method 8081									
Analytical Method: EPA Method 8081															
Matrix: Soil															
Units: mg/kg															
				Environmental Samples											
			Field ID:		AOC-4-SB2		AOC-4-SB2				AOC-4-SB3		AOC-4-SB3		
			Batch ID:		H746		H746				H746		H746		
	DB-5	DB-608		DB-5	DB-5	DB-608	DB-608			DB-5	DB-5	DB-608	DB-608		
Parameters	MDL	MDL		PQL	Result	PQL	Result	Validity	Comments	PQL	Result	PQL	Result	Validity	Comments
alpha BHC	0.0001	0.0001		0.00026	ND	0.00023	ND	U	g	0.00022	0.0016	0.00020	0.0015	J	n
beta BHC	0.0001	0.0001		0.00039	ND	0.00036	ND	U	g	0.00034	0.00081	0.00031	ND	U	h
delta BHC	0.0001	0.0001		0.00040	0.0034	0.00030	ND	U	h	0.00035	0.0024	0.00026	ND	U	h
gamma BHC (Lindane)	0.0001	0.0001		0.00032	0.0015	0.00026	0.0013		g	0.00027	0.0014	0.00023	0.0021	J	n
Heptachlor	0.0001	0.0001		0.0004	ND	0.0004	ND	U	g	0.0003	ND	0.0003	ND	U	g
Aldrin	0.0001	0.0001		0.00025	0.00081	0.00033	ND	U	h	0.00022	ND	0.00028	ND	U	g
Heptachlor Epoxide	0.0001	0.0001		0.00032	0.017	0.00040	ND	U	h	0.00027	0.010	0.00035	ND	U	h
Endosulfan I	0.0001	0.0001		0.00046	ND	0.00046	ND	U	g	0.00040	ND	0.00040	ND	U	g
Dieldrin	0.0001	0.0002		0.0005	ND	0.0006	ND	U	g	0.0004	ND	0.0005	ND	U	g
4,4'-DDE	0.0001	0.0002		0.0004	ND	0.0006	ND	U	g	0.0004	ND	0.0005	ND	U	g
Endrin	0.0001	0.0001		0.0004	0.0007	0.0004	ND	U	a,h	0.0003	0.0007	0.0004	0.0006	B J	a,n
Endosulfan II	0.0002	0.0002		0.0007	0.0015	0.0006	ND	U	a,h	0.0006	0.0017	0.0006	ND	U	a,h
4,4'-DDD	0.0001	0.0001		0.0005	ND	0.0006	ND	U	g	0.0004	ND	0.0005	ND	U	g
Endosulfan Sulfate	0.0002	0.0002		0.0010	ND	0.0010	ND	U	g	0.0009	ND	0.0009	ND	U	g
4,4'-DDT	0.0002	0.0001		0.0009	0.0020	0.0005	0.0018		g	0.0008	0.0020	0.0005	0.0015		g
Methoxychlor	0.0008	0.0011		0.0035	ND	0.0044	ND	U	g	0.0030	ND	0.0038	ND	U	g
Endrin Aldehyde	0.0002	0.0003		0.0009	ND	0.0011	ND	U	g	0.0008	0.0004	0.0009	ND	U	h
gamma-Chlordane	0.0001	0.0001		0.00022	ND	0.00033	ND	U	g	0.00019	ND	0.00028	ND	U	g
alpha-Chlordane	0.0001	0.0001		0.00026	ND	0.00046	ND	U	g	0.00022	ND	0.00040	ND	U	g
Toxaphene	0.007	0.009		0.03	ND	0.04	ND	U	g	0.03	ND	0.03	ND	U	g
Arochlor 1016	0.009	0.009		0.04	ND	0.03	ND	U	g	0.03	ND	0.03	ND	U	g
Arochlor 1242	0.005	0.008		0.02	ND	0.03	ND	U	g	0.02	ND	0.03	ND	U	g
Arochlor 1248	0.004	0.005		0.01	ND	0.02	ND	U	g	0.01	ND	0.02	ND	U	g
Arochlor 1254	0.011	0.009		0.04	ND	0.04	ND	U	g	0.04	ND	0.03	ND	U	g
Arochlor 1260	0.009	0.010		0.04	ND	0.02	ND	U	g	0.03	ND	0.02	ND	U	g
Arochlor 1221	0.011	0.010		0.04	ND	0.04	ND	U	g	0.04	ND	0.03	ND	U	g
Arochlor 1232	0.005	0.005		0.02	ND	0.00	ND	U	g	0.02	ND	0.00	ND	U	g

Base: Kotzebue LRRS							Table 2.5								
Site: AOC4							Analytical Data Summary								
Extraction Method: EPA Method 3550							EPA Method 8081								
Analytical Method: EPA Method 8081															
Matrix: Soil															
Units: mg/kg															
				Environmental Samples											
			Field ID:		AOC-4-SB4		AOC-4-SB4				AOC-4-SB5		AOC-4-SB5		
			Batch ID:		H746		H746				H746		H746		
	DB-5	DB-608		DB-5	DB-5	DB-608	DB-608			DB-5	DB-5	DB-608	DB-608		
Parameters	MDL	MDL		PQL	Result	PQL	Result	Validity	Comments	PQL	Result	PQL	Result	Validity	Comments
alpha BHC	0.0001	0.0001		0.00024	ND	0.00021	ND	U	g	0.00023	0.0018	0.00020	0.0016	J	n
beta BHC	0.0001	0.0001		0.00036	0.0070	0.00034	ND	U	h	0.00034	0.0028	0.00032	ND	U	h
delta BHC	0.0001	0.0001		0.00037	ND	0.00028	ND	U	g	0.00035	ND	0.00026	ND	U	g
gamma BHC (Lindane)	0.0001	0.0001		0.00030	0.0015	0.00024	0.014	J	n	0.00028	ND	0.00023	ND	U	g
Heptachlor	0.0001	0.0001		0.0003	0.0011	0.0003	0.011	J	n	0.0003	ND	0.0003	ND	U	g
Aldrin	0.0001	0.0001		0.00024	0.0026	0.00030	0.0094	J	n	0.00022	0.0014	0.00029	0.0022	J	n
Heptachlor Epoxide	0.0001	0.0001		0.00030	ND	0.00037	ND	U	g	0.00028	ND	0.00035	ND	U	g
Endosulfan I	0.0001	0.0001		0.00043	ND	0.00043	ND	U	g	0.00041	0.00026	0.00041	ND	U	h
Dieldrin	0.0001	0.0002		0.0005	0.0024	0.0006	0.0012	J	n	0.0004	0.0021	0.0005	0.0016	J	n
4,4'-DDE	0.0001	0.0002		0.0004	0.0029	0.0006	ND	U	h	0.0004	0.0028	0.0005	0.0024		g
Endrin	0.0001	0.0001		0.0004	0.0010	0.0004	0.0007	B J	a,n	0.0004	0.0006	0.0004	0.0016	B J	a,n
Endosulfan II	0.0002	0.0002		0.0006	ND	0.0006	ND	U	a	0.0006	ND	0.0006	ND	U	a
4,4'-DDD	0.0001	0.0001		0.0005	0.0054	0.0005	0.0052		g	0.0004	0.0073	0.0005	0.0077		g
Endosulfan Sulfate	0.0002	0.0002		0.0009	ND	0.0009	ND	U	g	0.0009	ND	0.0009	ND	U	g
4,4'-DDT	0.0002	0.0001		0.0009	0.0026	0.0005	0.0020		g	0.0008	0.0026	0.0005	0.0020		g
Methoxychlor	0.0008	0.0011		0.0033	ND	0.0041	ND	U	g	0.0031	ND	0.0039	ND	U	g
Endrin Aldehyde	0.0002	0.0003		0.0008	0.0006	0.0010	ND	U	h	0.0008	ND	0.0009	ND	U	g
gamma-Chlordane	0.0001	0.0001		0.00020	0.00040	0.00030	0.00079	J	n	0.00019	0.00067	0.00029	0.00022	J	n
alpha-Chlordane	0.0001	0.0001		0.00024	ND	0.00043	ND	U	g	0.00023	ND	0.00041	ND	U	g
Toxaphene	0.007	0.009		0.03	ND	0.03	ND	U	g	0.03	ND	0.03	ND	U	g
Arochlor 1016	0.009	0.009		0.03	ND	0.03	ND	U	g	0.03	ND	0.03	ND	U	g
Arochlor 1242	0.005	0.008		0.02	ND	0.03	ND	U	g	0.02	ND	0.03	ND	U	g
Arochlor 1248	0.004	0.005		0.01	ND	0.02	ND	U	g	0.01	ND	0.02	ND	U	g
Arochlor 1254	0.011	0.009		0.04	ND	0.03	ND	U	g	0.04	ND	0.03	ND	U	g
Arochlor 1260	0.009	0.010		0.03	ND	0.02	ND	U	g	0.03	ND	0.02	ND	U	g
Arochlor 1221	0.011	0.010		0.04	ND	0.04	ND	U	g	0.04	ND	0.03	ND	U	g
Arochlor 1232	0.005	0.005		0.02	ND	0.00	ND	U	g	0.02	ND	0.00	ND	U	g

Base: Kotzebue LRRS				Table 2.6										
Site: AOC4						Analytical Data Summary								
Extraction Method: EPA Method 8260						EPA Method 8260								
Analytical Method: EPA Method 8260														
Matrix: Soil														
Units: mg/kg														
			Environmental Samples											
		Field ID:		AOC4-SB1-7.0										
		Batch ID:		H671										
Parameters	MDL		PQL	Result	Validity	Comments								
Chloromethane	0.0009		0.37	ND	U	g								
Bromomethane	0.0008		0.35	ND	U	g								
Vinyl Chloride	0.0010		0.4	ND	U	g								
Chloroethane	0.0010		0.43	ND	U	g								
Methylene Chloride	0.0009		0.36	0.21	B J	a								
Acetone	0.0039		1.7	ND	U	a								
Carbon Disulfide	0.0005		0.23	ND	U	g								
1,1-Dichloroethene	0.0012		0.49	ND	U	g								
1,1-Dichloroethane	0.0004		0.15	ND	U	g								
trans-1,2-Dichloroethene	0.0009		0.37	ND	U	g								
cis-1,2-Dichloroethylene	0.0011		0.48	ND	U	g								
Chloroform	0.0005		0.19	ND	U	g								
1,2-Dichloroethane	0.0005		0.21	ND	U	g								
Methyl Ethyl Ketone (2-butanone)	0.0025		1.0	ND	U	g								
1,1,1-Trichloroethane	0.0004		0.18	0.098	J									
Carbon Tetrachloride	0.0010		0.41	ND	U	g								
Vinyl Acetate	0.0016		0.68	ND	U	g								
Bromodichloromethane	0.0006		0.28	ND	U	g								
1,2-Dichloropropane	0.0008		0.36	ND	U	g								
cis-1,3-Dichloropropene	0.0007		0.29	ND	U	g								
Trichloroethylene (tce)	0.0005		0.23	0.098	J									
Dibromochloromethane	0.0003		0.14	ND	U	g								
1,1,2-Trichloroethane	0.0007		0.29	ND	U	g								
Benzene	0.0005		0.20	ND	U	g								

Base: Kotzebue LRRS							Table 2.6							
Site: AOC4							Analytical Data Summary							
Extraction Method: EPA Method 8260							EPA Method 8260							
Analytical Method: EPA Method 8260														
Matrix: Soil														
Units: mg/kg														
			Environmental Samples											
		Field ID:		AOC-4-SB2					AOC-4-SB3				AOC-4-SB4		
		Batch ID:		H746					H746				H746		
Parameters	MDL		PQL	Result	Validity	Comments	PQL	Result	Validity	Comments	PQL	Result	Validity	Comments
Chloromethane	0.0009		0.003	ND	U	g	0.003	ND	U	g	0.38	ND	U	g
Bromomethane	0.0008		0.003	ND	U	g	0.003	ND	U	g	0.35	ND	U	g
Vinyl Chloride	0.0010		0.003	ND	U	g	0.003	ND	U	g	0.41	ND	U	g
Chloroethane	0.0010		0.003	ND	U	g	0.003	ND	U	g	0.44	ND	U	g
Methylene Chloride	0.0009		0.003	0.003	B	a,k	0.003	0.003	B	a,k	0.37	0.29	B J	a,k
Acetone	0.0039		0.01	ND	U	a	0.01	ND	U	a	1.7	ND	U	a
Carbon Disulfide	0.0005		0.002	ND	U	g	0.002	ND	U	g	0.23	ND	U	g
1,1-Dichloroethene	0.0012		0.004	ND	U	g	0.004	ND	U	g	0.50	ND	U	g
1,1-Dichloroethane	0.0004		0.001	ND	U	g	0.001	ND	U	g	0.16	ND	U	g
trans-1,2-Dichloroethene	0.0009		0.003	ND	U	g	0.003	ND	U	g	0.38	ND	U	g
cis-1,2-Dichloroethylene	0.0011		0.004	ND	U	g	0.004	ND	U	g	0.49	ND	U	g
Chloroform	0.0005		0.001	ND	U	g	0.001	ND	U	g	0.20	ND	U	g
1,2-Dichloroethane	0.0005		0.002	ND	U	g	0.002	ND	U	g	0.22	ND	U	g
Methyl Ethyl Ketone (2-butanone)	0.0025		0.008	ND	U	g	0.008	ND	U	g	1.1	ND	U	g
1,1,1-Trichloroethane	0.0004		0.001	ND	U	g	0.001	ND	U	g	0.19	ND	U	g
Carbon Tetrachloride	0.0010		0.003	ND	U	g	0.003	ND	U	g	0.42	ND	U	g
Vinyl Acetate	0.0016		0.005	ND	U	g	0.005	ND	U	g	0.69	ND	U	g
Bromodichloromethane	0.0006		0.002	ND	U	g	0.002	ND	U	g	0.28	ND	U	g
1,2-Dichloropropane	0.0008		0.003	ND	U	g	0.003	ND	U	g	0.36	ND	U	g
cis-1,3-Dichloropropene	0.0007		0.002	ND	U	g	0.002	ND	U	g	0.30	ND	U	g
Trichloroethylene (tce)	0.0005		0.002	ND	U	g	0.002	ND	U	g	0.23	ND	U	g
Dibromochloromethane	0.0003		0.001	ND	U	g	0.001	ND	U	g	0.15	ND	U	g
1,1,2-Trichloroethane	0.0007		0.002	ND	U	g	0.002	ND	U	g	0.30	ND	U	g
Benzene	0.0005		0.0015	ND	U	g	0.0015	ND	U	g	0.20	ND	U	g

Base: Kotzebue LRRS						Table 2.6								
Site: AOC4						Analytical Data Summary								
Extraction Method: EPA Method 8260						EPA Method 8260								
Analytical Method: EPA Method 8260														
Matrix: Soil														
Units: mg/kg														
			Environmental Samples											
		Field ID:		AOC-4-SB2				AOC-4-SB3				AOC-4-SB4		
		Batch ID:		H746				H746				H746		
Parameters	MDL		PQL	Result	Validity	Comments	PQL	Result	Validity	Comments	PQL	Result	Validity	Comments
trans-1,3-Dichloropropene	0.0005		0.002	ND	U	g	0.002	ND	U	g	0.23	ND	U	g
2-Chloroethyl Vinyl Ether	0.006		0.002	ND	U	g	0.002	ND	U	g	0.28	ND	U	g
Bromoform	0.0013		0.004	ND	U	g	0.004	ND	U	g	0.54	ND	U	g
Methyl Isobutyl Ketone	0.0015		0.005	ND	U	g	0.005	ND	U	g	0.65	ND	U	g
2-Hexanone	0.0027		0.009	ND	U	g	0.009	ND	U	g	1.2	ND	U	g
Tetrachloroethylene (pce)	0.0009		0.003	ND	U	g	0.003	ND	U	g	0.39	ND	U	g
1,1,2,2-Tetrachloroethane	0.0009		0.0029	ND	U	g	0.0029	ND	U	g	0.39	ND	U	g
Toluene	0.0009		0.0029	ND	U	g	0.0029	ND	U	g	0.39	ND	U	g
Chlorobenzene	0.0007		0.002	ND	U	g	0.002	ND	U	g	0.31	ND	U	g
Ethylbenzene	0.0004		0.0014	ND	U	g	0.0014	ND	U	g	0.19	ND	U	g
Styrene	0.0006		0.002	ND	U	g	0.002	ND	U	g	0.28	ND	U	g
1,1,2-Trichloro-1,2,2-trifluoroethane	0.0007		0.002	ND	U	g	0.002	ND	U	g	0.32	ND	U	g
Xylenes, total	0.0020		0.006	ND	U	g	0.006	ND	U	g	0.87	1.6		g
1,1,1,2-Tetrachloroethane	0.0010		0.003	ND	U	g	0.003	ND	U	g	0.43	ND	U	g
1,2,3-Trichloropropane	0.0023		0.007	ND	U	g	0.007	ND	U	g	0.97	ND	U	g
Bromochloromethane	0.0007		0.002	ND	U	g	0.002	ND	U	g	0.29	ND	U	g
1-Chlorohexane	0.0007		0.002	ND	U	g	0.002	ND	U	g	0.28	ND	U	g
Bromobenzene	0.0007		0.0023	ND	U	g	0.0023	ND	U	g	0.31	ND	U	g

Base: Kotzebue LRRS						Table 2.6								
Site: AOC4						Analytical Data Summary								
Extraction Method: EPA Method 8260						EPA Method 8260								
Analytical Method: EPA Method 8260														
Matrix: Soil														
Units: mg/kg														
			Environmental Samples											
		Field ID:		AOC-4-SB5										
		Batch ID:		H746										
Parameters	MDL		PQL	Result	Validity	Comments								
Chloromethane	0.0009		0.38	ND	U	g								
Bromomethane	0.0008		0.35	ND	U	g								
Vinyl Chloride	0.0010		0.41	ND	U	g								
Chloroethane	0.0010		0.43	ND	U	g								
Methylene Chloride	0.0009		0.37	0.27	B J	a,k								
Acetone	0.0039		1.7	ND	U	a								
Carbon Disulfide	0.0005		0.23	ND	U	g								
1,1-Dichloroethene	0.0012		0.49	ND	U	g								
1,1-Dichloroethane	0.0004		0.15	ND	U	g								
trans-1,2-Dichloroethene	0.0009		0.38	ND	U	g								
cis-1,2-Dichloroethylene	0.0011		0.49	ND	U	g								
Chloroform	0.0005		0.20	ND	U	g								
1,2-Dichloroethane	0.0005		0.21	ND	U	g								
Methyl Ethyl Ketone (2-butanone)	0.0025		1.1	ND	U	g								
1,1,1-Trichloroethane	0.0004		0.18	ND	U	g								
Carbon Tetrachloride	0.0010		0.42	ND	U	g								
Vinyl Acetate	0.0016		0.69	ND	U	g								
Bromodichloromethane	0.0006		0.28	ND	U	g								
1,2-Dichloropropane	0.0008		0.36	ND	U	g								
cis-1,3-Dichloropropene	0.0007		0.29	ND	U	g								
Trichloroethylene (tce)	0.0005		0.23	ND	U	g								
Dibromochloromethane	0.0003		0.15	ND	U	g								
1,1,2-Trichloroethane	0.0007		0.29	ND	U	g								
Benzene	0.0005		0.20	ND	U	g								

Base: Kotzebue LRRS						Table 2.6								
Site: AOC4						Analytical Data Summary								
Extraction Method: EPA Method 8260						EPA Method 8260								
Analytical Method: EPA Method 8260														
Matrix: Soil														
Units: mg/kg														
			Environmental Samples											
		Field ID:		AOC-4-SB5										
		Batch ID:		H746										
Parameters	MDL		PQL	Result	Validity	Comments								
trans-1,3-Dichloropropene	0.0005		0.23	ND	U	g								
2-Chloroethyl Vinyl Ether	0.006		0.27	ND	U	g								
Bromoform	0.0013		0.54	ND	U	g								
Methyl Isobutyl Ketone	0.0015		0.64	ND	U	g								
2-Hexanone	0.0027		1.2	ND	U	g								
Tetrachloroethylene (pce)	0.0009		0.38	ND	U	g								
1,1,2,2-Tetrachloroethane	0.0009		0.39	ND	U	g								
Toluene	0.0009		0.39	ND	U	g								
Chlorobenzene	0.0007		0.31	ND	U	g								
Ethylbenzene	0.0004		0.18	ND	U	g								
Styrene	0.0006		0.27	ND	U	g								
1,1,2-Trichloro-1,2,2-trifluoroethane	0.0007		0.32	ND	U	g								
Xylenes, total	0.0020		0.86	0.57	J									
1,1,1,2-Tetrachloroethane	0.0010		0.43	ND	U	g								
1,2,3-Trichloropropane	0.0023		0.96	ND	U	g								
Bromochloromethane	0.0007		0.29	ND	U	g								
1-Chlorohexane	0.0007		0.28	ND	U	g								
Bromobenzene	0.0007		0.31	ND	U	g								

Base: Kotzebue LRRS
Site: AOC4
Extraction Method: EPA Method 3550
Analytical Method: EPA Method 8270
Matrix: Soil
Units: mg/kg

Table 2.7
Analytical Data Summary
EPA Method 8270

			Environmental Samples							
		Field ID:		AOC4-SB1-7.0				AOC4-SB1-7.0*		
		Batch ID:		H671				H671		
Parameters	MDL		PQL	Result	Validity	Comments	PQL	Result	Validity	Comments
Phenol	0.05		0.2	ND	UJ	n	0.2	ND	UJ	n
bis(2-Chloroethyl) Ether	0.04		0.1	ND	UJ	n	0.1	ND	UJ	n
2-Chlorophenol	0.07		0.2	ND	UJ	n	0.2	ND	UJ	n
1,3-Dichlorobenzene	0.04		0.1	ND	UJ	n	0.1	ND	UJ	n
1,4-Dichlorobenzene	0.03		0.1	ND	UJ	n	0.1	ND	UJ	n
Benzyl Alcohol	0.05		0.2	ND	UJ	n	0.2	ND	UJ	n
1,2-Dichlorobenzene	0.04		0.1	ND	UJ	n	0.1	ND	UJ	n
2-Methylphenol	0.10		0.3	ND	UJ	n	0.3	ND	UJ	n
2,2'-Oxybis (1-Chloropropane)	0.03		0.1	ND	UJ	n	0.1	ND	UJ	n
4-Methylphenol	0.08		0.3	ND	UJ	n	0.3	ND	UJ	n
N-Nitrosodi-n-propylamine	0.03		0.1	ND	UJ	n	0.1	ND	UJ	n
Hexachloroethane	0.04		0.1	ND	UJ	n	0.1	ND	UJ	n
Nitrobenzene	0.02		0.1	ND	UJ	n	0.1	ND	UJ	n
Isophorone	0.03		0.1	ND	UJ	n	0.1	0.6**	J	n
2-Nitrophenol	0.03		0.1	ND	UJ	n	0.1	0.1**	J	n
2,4-Dimethylphenol	0.17		0.3	ND	UJ	n	0.3	ND	UJ	n
Benzoic Acid	0.06		0.19	ND	UJ	n	0.19	0.49**	J	n
bis(2-Chloroethoxy) Methane	0.04		0.1	ND	UJ	n	0.1	ND	UJ	n
2,4-Dichlorophenol	0.04		0.2	ND	UJ	n	0.2	ND	UJ	n
1,2,4-Trichlorobenzene	0.03		0.1	ND	UJ	n	0.1	ND	UJ	n
Naphthalene	0.04		0.1	ND	UJ	n	0.1	ND	UJ	n
4-Chloroaniline	0.10		0.4	ND	UJ	n	0.4	ND	UJ	n
Hexachlorobutadiene	0.03		0.1	ND	UJ	n	0.1	ND	UJ	n
4-Chloro-3-Methylphenol	0.06		0.2	ND	UJ	n	0.2	ND	UJ	n
2-Methylnaphthalene	0.03		0.1	ND	UJ	n	0.1	ND	UJ	n
Hexachlorocyclopentadiene	0.03		0.1	ND	UJ	n	0.1	ND	UJ	n
2,4,6-Trichlorophenol	0.04		0.1	ND	UJ	n	0.1	ND	UJ	n
2,4,5-Trichlorophenol	0.03		0.09	ND	UJ	n	0.09	ND	UJ	n
2-Chloronaphthalene	0.03		0.1	ND	UJ	n	0.1	ND	UJ	n
2-Nitroaniline	0.02		0.07	ND	UJ	n	0.07	ND	UJ	n
Dimethyl Phthalate	0.04		0.1	ND	UJ	n	0.1	ND	UJ	n
Acenaphthylene	0.04		0.1	ND	UJ	n	0.1	ND	UJ	n
3-Nitroaniline	0.11		0.38	ND	UJ	n	0.38	ND	UJ	n
Acenaphthene	0.03		0.1	ND	UJ	n	0.1	ND	UJ	n
2,4-Dinitrophenol	0.09		0.31	ND	UJ	n	0.31	ND	UJ	n
4-Nitrophenol	0.07		0.23	ND	UJ	n	0.23	0.80**	J	n
Dibenzofuran	0.03		0.1	ND	UJ	n	0.1	ND	UJ	n
2,6-Dinitrotoluene	0.04		0.1	ND	UJ	n	0.1	ND	UJ	n

* Reanalyzed.
** In the opinion of the analyst, the relevant compound may not be present at or below the indicated concentration due to interfering background contamination that prevents a positive or negative spectral confirmation.

Base: Kotzebue LRRS							Table 2.7							
Site: AOC4							Analytical Data Summary							
Extraction Method: EPA Method 3550							EPA Method 8270							
Analytical Method: EPA Method 8270														
Matrix: Soil														
Units: mg/kg														
			Environmental Samples											
		Field ID:		AOC4-SB1-7.0				AOC4-SB1-7.0*						
		Batch ID:		H671				H671						
Parameters	MDL		PQL	Result	Validity	Comments	PQL	Result	Validity	Comments				
2,4-Dinitrotoluene	0.02		0.1	ND	UJ	n	0.1	ND	UJ	n				
Diethyl Phthalate	0.04		0.1	ND	UJ	n	0.1	ND	UJ	n				
4-Chlorophenyl Phenyl Ether	0.02		0.1	ND	UJ	n	0.1	ND	UJ	n				
Fluorene	0.03		0.1	ND	UJ	n	0.1	ND	UJ	n				
4-Nitroaniline	0.13		0.46	ND	UJ	n	0.46	ND	UJ	n				
4,6-Dinitro-2-Methylphenol	0.09		0.31	ND	UJ	n	0.31	ND	UJ	n				
N-Nitrosodiphenylamine	0.08		0.3	ND	UJ	n	0.3	ND	UJ	n				
4-Bromophenyl Phenyl Ether	0.02		0.1	ND	UJ	n	0.1	ND	UJ	n				
Hexachlorobenzene	0.03		0.1	ND	UJ	n	0.1	ND	UJ	n				
Pentachlorophenol	0.03		0.11	ND	UJ	n	0.11	ND	UJ	n				
Phenanthrene	0.03		0.1	ND	UJ	n	0.1	ND	UJ	n				
Anthracene	0.04		0.2	ND	UJ	n	0.2	ND	UJ	n				
di-n-butyl Phthalate	0.06		0.2	ND	UJ	n	0.2	ND	UJ	n				
Fluroanthene	0.03		0.1	ND	UJ	n	0.1	ND	UJ	n				
Pyrene	0.03		0.1	ND	UJ	n	0.1	ND	UJ	n				
Butylbenzylphthalate	0.02		0.1	ND	UJ	n	0.1	ND	UJ	n				
3,3'-Dichlorobenzidine	0.06		0.2	ND	UJ	n	0.2	ND	UJ	n				
Benzo(a)anthracene	0.04		0.1	ND	UJ	n	0.1	ND	UJ	n				
bis(2-Ethylhexyl) Phthalate	0.04		0.1	0.1	J	n	0.1	0.1	J	n				
Chrysene	0.05		0.2	ND	UJ	n	0.2	ND	UJ	n				
di-n-Octylphthalate	0.02		0.1	ND	UJ	n	0.1	ND	UJ	n				
Benzo(b)fluoranthene	0.04		0.1	ND	UJ	n	0.1	ND	UJ	n				
Benzo(k)fluoranthene	0.07		0.3	ND	UJ	n	0.3	ND	UJ	n				
Benzo(a)pyrene	0.04		0.1	ND	UJ	n	0.1	ND	UJ	n				
Indeno(1,2,3-c,d)pyrene	0.03		0.1	ND	UJ	n	0.1	ND	UJ	n				
Dibenzo(a,h)anthracene	0.02		0.1	ND	UJ	n	0.1	ND	UJ	n				
Benzo(g,h,i)perylene	0.03		0.1	ND	UJ	n	0.1	ND	UJ	n				
* Reanalyzed.														

Base: Kotzebue LRRS
Site: AOC4
Extraction Method: EPA Method 3550
Analytical Method: EPA Method 8270
Matrix: Soil
Units: mg/kg

Table 11.2.1.7
Analytical Data Summary
EPA Method 8270

			Environmental Samples							
		Field ID:		AOC4-SB1-7.0				AOC4-SB1-7.0*		
		Batch ID:		H671				H671		
Parameters	MDL		PQL	Result	Validity	Comments	PQL	Result	Validity	Comments
Phenol	0.05		0.2	ND	UJ	n	0.2	ND	UJ	n
bis(2-Chloroethyl) Ether	0.04		0.1	ND	UJ	n	0.1	ND	UJ	n
2-Chlorophenol	0.07		0.2	ND	UJ	n	0.2	ND	UJ	n
1,3-Dichlorobenzene	0.04		0.1	ND	UJ	n	0.1	ND	UJ	n
1,4-Dichlorobenzene	0.03		0.1	ND	UJ	n	0.1	ND	UJ	n
Benzyl Alcohol	0.05		0.2	ND	UJ	n	0.2	ND	UJ	n
1,2-Dichlorobenzene	0.04		0.1	ND	UJ	n	0.1	ND	UJ	n
2-Methylphenol	0.10		0.3	ND	UJ	n	0.3	ND	UJ	n
2,2'-Oxybis (1-Chloropropane)	0.03		0.1	ND	UJ	n	0.1	ND	UJ	n
4-Methylphenol	0.08		0.3	ND	UJ	n	0.3	ND	UJ	n
N-Nitrosodi-n-propylamine	0.03		0.1	ND	UJ	n	0.1	ND	UJ	n
Hexachloroethane	0.04		0.1	ND	UJ	n	0.1	ND	UJ	n
Nitrobenzene	0.02		0.1	ND	UJ	n	0.1	ND	UJ	n
Isophorone	0.03		0.1	ND	UJ	n	0.6	ND	UJ	n
2-Nitrophenol	0.03		0.1	ND	UJ	n	0.1	ND	UJ	n
2,4-Dimethylphenol	0.17		0.3	ND	UJ	n	0.3	ND	UJ	n
Benzoic Acid	0.06		0.19	ND	UJ	n	0.49	ND	UJ	n
bis(2-Chloroethoxy) Methane	0.04		0.1	ND	UJ	n	0.1	ND	UJ	n
2,4-Dichlorophenol	0.04		0.2	ND	UJ	n	0.2	ND	UJ	n
1,2,4-Trichlorobenzene	0.03		0.1	ND	UJ	n	0.1	ND	UJ	n
Naphthalene	0.04		0.1	ND	UJ	n	0.1	ND	UJ	n
4-Chloroaniline	0.10		0.4	ND	UJ	n	0.4	ND	UJ	n
Hexachlorobutadiene	0.03		0.1	ND	UJ	n	0.1	ND	UJ	n
4-Chloro-3-Methylphenol	0.06		0.2	ND	UJ	n	0.2	ND	UJ	n
2-Methylnaphthalene	0.03		0.1	ND	UJ	n	0.1	ND	UJ	n
Hexachlorocyclopentadiene	0.03		0.1	ND	UJ	n	0.1	ND	UJ	n
2,4,6-Trichlorophenol	0.04		0.1	ND	UJ	n	0.1	ND	UJ	n
2,4,5-Trichlorophenol	0.03		0.09	ND	UJ	n	0.09	ND	UJ	n
2-Chloronaphthalene	0.03		0.1	ND	UJ	n	0.1	ND	UJ	n
2-Nitroaniline	0.02		0.07	ND	UJ	n	0.07	ND	UJ	n
Dimethyl Phthalate	0.04		0.1	ND	UJ	n	0.1	ND	UJ	n
Acenaphthylene	0.04		0.1	ND	UJ	n	0.1	ND	UJ	n
3-Nitroaniline	0.11		0.38	ND	UJ	n	0.38	ND	UJ	n
Acenaphthene	0.03		0.1	ND	UJ	n	0.1	ND	UJ	n
2,4-Dinitrophenol	0.09		0.31	ND	UJ	n	0.31	ND	UJ	n
4-Nitrophenol	0.07		0.23	ND	UJ	n	0.80	ND	UJ	n
Dibenzofuran	0.03		0.1	ND	UJ	n	0.1	ND	UJ	n
2,6-Dinitrotoluene	0.04		0.1	ND	UJ	n	0.1	ND	UJ	n

* Reanalyzed.

Base: Kotzebue LRRS
Site: AOC4
Extraction Method: EPA Method 3550
Analytical Method: EPA Method 8270
Matrix: Soil
Units: mg/kg

Table 11.2.1.7
Analytical Data Summary
EPA Method 8270

			Environmental Samples								
		Field ID:		AOC4-SB1-7.0				AOC4-SB1-7.0*			
		Batch ID:		H671				H671			
Parameters	MDL		PQL	Result	Validity	Comments	PQL	Result	Validity	Comments	
2,4-Dinitrotoluene	0.02		0.1	ND	UJ	n	0.1	ND	UJ	n	
Diethyl Phthalate	0.04		0.1	ND	UJ	n	0.1	ND	UJ	n	
4-Chlorophenyl Phenyl Ether	0.02		0.1	ND	UJ	n	0.1	ND	UJ	n	
Fluorene	0.03		0.1	ND	UJ	n	0.1	ND	UJ	n	
4-Nitroaniline	0.13		0.46	ND	UJ	n	0.46	ND	UJ	n	
4,6-Dinitro-2-Methylphenol	0.09		0.31	ND	UJ	n	0.31	ND	UJ	n	
N-Nitrosodiphenylamine	0.08		0.3	ND	UJ	n	0.3	ND	UJ	n	
4-Bromophenyl Phenyl Ether	0.02		0.1	ND	UJ	n	0.1	ND	UJ	n	
Hexachlorobenzene	0.03		0.1	ND	UJ	n	0.1	ND	UJ	n	
Pentachlorophenol	0.03		0.11	ND	UJ	n	0.11	ND	UJ	n	
Phenanthrene	0.03		0.1	ND	UJ	n	0.1	ND	UJ	n	
Anthracene	0.04		0.2	ND	UJ	n	0.2	ND	UJ	n	
di-n-butyl Phthalate	0.06		0.2	ND	UJ	n	0.2	ND	UJ	n	
Fluroanthene	0.03		0.1	ND	UJ	n	0.1	ND	UJ	n	
Pyrene	0.03		0.1	ND	UJ	n	0.1	ND	UJ	n	
Butylbenzylphthalate	0.02		0.1	ND	UJ	n	0.1	ND	UJ	n	
3,3'-Dichlorobenzidine	0.06		0.2	ND	UJ	n	0.2	ND	UJ	n	
Benzo(a)anthracene	0.04		0.1	ND	UJ	n	0.1	ND	UJ	n	
bis(2-Ethylhexyl) Phthalate	0.04		0.1	0.1	J	n	0.1	0.1	J	n	
Chrysene	0.05		0.2	ND	UJ	n	0.2	ND	UJ	n	
di-n-Octylphthalate	0.02		0.1	ND	UJ	n	0.1	ND	UJ	n	
Benzo(b)fluoranthene	0.04		0.1	ND	UJ	n	0.1	ND	UJ	n	
Benzo(k)fluoranthene	0.07		0.3	ND	UJ	n	0.3	ND	UJ	n	
Benzo(a)pyrene	0.04		0.1	ND	UJ	n	0.1	ND	UJ	n	
Indeno(1,2,3-c,d)pyrene	0.03		0.1	ND	UJ	n	0.1	ND	UJ	n	
Dibenzo(a,h)anthracene	0.02		0.1	ND	UJ	n	0.1	ND	UJ	n	
Benzo(g,h,i)perylene	0.03		0.1	ND	UJ	n	0.1	ND	UJ	n	

* Reanalyzed.

Base: Kotzebue LRRS						Table 11.2.1.7								
Site: AOC4						Analytical Data Summary								
Extraction Method: EPA Method 3550						EPA Method 8270								
Analytical Method: EPA Method 8270														
Matrix: Soil														
Units: mg/kg														
			Environmental Samples											
		Field ID:		AOC-4-SB2				AOC-4-SB3				AOC-4-SB4		
		Batch ID:		H746				H746				H746		
Parameters	MDL		PQL	Result	Validity	Comments	PQL	Result	Validity	Comments	PQL	Result	Validity	Comments
Phenol	0.05		0.2	ND	U	g	0.2	ND	U	g	2.1	ND	U	g
bis(2-Chloroethyl) Ether	0.04		0.2	ND	U	g	0.1	ND	U	g	1.5	ND	U	g
2-Chlorophenol	0.07		0.3	ND	U	g	0.3	ND	U	g	2.7	ND	U	g
1,3-Dichlorobenzene	0.04		0.2	ND	U	g	0.1	ND	U	g	1.5	ND	U	g
1,4-Dichlorobenzene	0.03		0.1	ND	U	g	0.1	ND	U	g	1.0	ND	U	g
Benzyl Alcohol	0.05		0.2	ND	U	g	0.2	ND	U	g	2.0	ND	U	g
1,2-Dichlorobenzene	0.04		0.2	ND	U	g	0.1	ND	U	g	1.5	ND	U	g
2-Methylphenol	0.10		0.4	ND	U	g	0.3	ND	U	g	3.8	ND	U	g
2,2'-Oxybis (1-Chloropropane)	0.03		0.1	ND	U	g	0.1	ND	U	g	1.3	ND	U	g
4-Methylphenol	0.08		0.3	ND	U	g	0.3	ND	U	g	3.0	ND	U	g
N-Nitrosodi-n-propylamine	0.03		0.1	ND	U	g	0.1	ND	U	g	1.0	ND	U	g
Hexachloroethane	0.04		0.2	ND	U	g	0.1	ND	U	g	1.5	ND	U	g
Nitrobenzene	0.02		0.1	ND	U	g	0.1	ND	U	g	1.0	ND	U	g
Isophorone	0.03		0.1	ND	U	g	0.1	ND	U	g	1.3	ND	U	g
2-Nitrophenol	0.03		0.1	ND	U	g	0.1	ND	U	g	3.6	ND	U	g
2,4-Dimethylphenol	0.17		0.4	ND	U	g	0.3	ND	U	g	3.6	ND	U	g
Benzoic Acid	0.06		0.23	ND	U	g	0.20	ND	U	g	7.5	ND	U	g
bis(2-Chloroethoxy) Methane	0.04		0.1	ND	U	g	0.1	ND	U	g	1.7	ND	U	g
2,4-Dichlorophenol	0.04		0.2	ND	U	g	0.2	ND	U	g	1.7	ND	U	g
1,2,4-Trichlorobenzene	0.03		0.1	ND	U	g	0.1	ND	U	g	1.3	ND	U	g
Naphthalene	0.04		0.1	ND	U	g	0.1	ND	U	g	1.4	22		g
4-Chloroaniline	0.10		0.4	ND	U	g	0.4	ND	U	g	4.0	ND	U	g
Hexachlorobutadiene	0.03		0.1	ND	U	g	0.1	ND	U	g	1.3	ND	U	g
4-Chloro-3-Methylphenol	0.06		0.2	ND	U	g	0.2	ND	U	g	2.3	ND	U	g
2-Methylnaphthalene	0.03		0.1	ND	U	g	0.1	ND	U	g	1.3	52		g
Hexachlorocyclopentadiene	0.03		0.1	ND	U	g	0.1	ND	U	g	1.0	ND	U	g
2,4,6-Trichlorophenol	0.04		0.2	ND	U	g	0.2	ND	U	g	1.6	ND	U	g
2,4,5-Trichlorophenol	0.03		0.10	ND	U	g	0.09	ND	U	g	0.97	ND	U	g
2-Chloronaphthalene	0.03		0.1	ND	U	g	0.1	ND	U	g	1.3	ND	U	g
2-Nitroaniline	0.02		0.08	ND	U	g	0.07	ND	U	g	4.8	ND	U	g
Dimethyl Phthalate	0.04		0.1	ND	U	g	0.1	ND	U	g	1.4	ND	U	g
Acenaphthylene	0.04		0.2	ND	U	g	0.1	ND	U	g	1.6	ND	U	g
3-Nitroaniline	0.11		0.46	ND	U	g	0.39	ND	U	g	4.3	ND	U	g
Acenaphthene	0.03		0.1	ND	U	g	0.1	ND	U	g	1.2	1.0	J	
2,4-Dinitrophenol	0.09		0.37	ND	U	g	0.32	ND	U	g	3.4	ND	U	g
4-Nitrophenol	0.07		0.27	ND	U	g	0.24	ND	U	g	2.6	11		g
Dibenzofuran	0.03		0.1	ND	U	g	0.1	ND	U	g	1.2	1.2	J	
2,6-Dinitrotoluene	0.04		0.2	ND	U	g	0.2	ND	U	g	1.6	1.6		g

Base: Kotzebue LRRS						Table 11.2.1.7								
Site: AOC4						Analytical Data Summary								
Extraction Method: EPA Method 3550						EPA Method 8270								
Analytical Method: EPA Method 8270														
Matrix: Soil														
Units: mg/kg														
			Environmental Samples											
		Field ID:		AOC-4-SB2				AOC-4-SB3				AOC-4-SB4		
		Batch ID:		H746				H746				H746		
Parameters	MDL		PQL	Result	Validity	Comments	PQL	Result	Validity	Comments	PQL	Result	Validity	Comments
2,4-Dinitrotoluene	0.02		0.1	ND	U	g	0.1	ND	U	g	0.9	ND	U	g
Diethyl Phthalate	0.04		0.1	ND	U	g	0.1	ND	U	g	1.4	ND	U	g
4-Chlorophenyl Phenyl Ether	0.02		0.1	ND	U	g	0.1	ND	U	g	0.8	ND	U	g
Fluorene	0.03		0.1	ND	U	g	0.1	ND	U	g	1.2	1.7		g
4-Nitroaniline	0.13		0.55	ND	U	g	0.47	ND	U	g	5.1	ND	U	g
4,6-Dinitro-2-Methylphenol	0.09		0.37	ND	U	g	0.32	ND	U	g	3.4	ND	U	g
N-Nitrosodiphenylamine	0.08		0.3	ND	U	g	0.3	ND	U	g	3.3	ND	U	g
4-Bromophenyl Phenyl Ether	0.02		0.1	ND	U	g	0.1	ND	U	g	0.8	ND	U	g
Hexachlorobenzene	0.03		0.1	ND	U	g	0.1	ND	U	g	1.3	ND	U	g
Pentachlorophenol	0.03		0.14	ND	U	g	0.12	ND	U	g	1.3	ND	U	g
Phenanthrene	0.03		0.1	ND	U	g	0.1	ND	U	g	1.3	0.7	J	
Anthracene	0.04		0.2	ND	U	g	0.2	ND	U	g	1.7	ND	U	g
di-n-butyl Phthalate	0.06		0.3	ND	U	g	0.2	ND	U	g	2.4	ND	U	g
Fluroanthene	0.03		0.1	ND	U	g	0.1	ND	U	g	1.3	ND	U	g
Pyrene	0.03		0.1	ND	U	g	0.1	ND	U	g	1.1	ND	U	g
Butylbenzylphthalate	0.02		0.1	ND	U	g	0.1	ND	U	g	0.9	ND	U	g
3,3'-Dichlorobenzidine	0.06		0.2	ND	U	g	0.2	ND	U	g	2.2	ND	U	g
Benzo(a)anthracene	0.04		0.2	ND	U	g	0.1	ND	U	g	1.5	ND	U	g
bis(2-Ethylhexyl) Phthalate	0.04		0.2	ND	U	g	0.1	0.1	J		1.5	1.4	J	
Chrysene	0.05		0.2	ND	U	g	0.2	ND	U	g	1.7	ND	U	g
di-n-Octylphthalate	0.02		0.1	ND	U	g	0.1	ND	U	g	0.9	ND	U	g
Benzo(b)fluoranthene	0.04		0.2	ND	U	g	0.2	ND	U	g	1.7	ND	U	g
Benzo(k)fluoranthene	0.07		0.3	ND	U	g	0.3	ND	U	g	2.9	ND	U	g
Benzo(a)pyrene	0.04		0.2	ND	U	g	0.1	ND	U	g	1.5	ND	U	g
Indeno(1,2,3-c,d)pyrene	0.03		0.1	ND	U	g	0.1	ND	U	g	1.0	ND	U	g
Dibenzo(a,h)anthracene	0.02		0.1	ND	U	g	0.1	ND	U	g	0.9	ND	U	g
Benzo(g,h,i)perylene	0.03		0.1	ND	U	g	0.1	ND	U	g	1.2	ND	U	g

Base: Kotzebue LRRS						Table 11.2.1.7								
Site: AOC4						Analytical Data Summary								
Extraction Method: EPA Method 3550						EPA Method 8270								
Analytical Method: EPA Method 8270														
Matrix: Soil														
Units: mg/kg														
			Environmental Samples											
		Field ID:		AOC-4-SB5										
		Batch ID:		H746										
Parameters	MDL		PQL	Result	Validity	Comments								
Phenol	0.05		2.0	ND	U	g								
bis(2-Chloroethyl) Ether	0.04		1.4	ND	U	g								
2-Chlorophenol	0.07		2.6	ND	U	g								
1,3-Dichlorobenzene	0.04		1.4	ND	U	g								
1,4-Dichlorobenzene	0.03		0.9	ND	U	g								
Benzyl Alcohol	0.05		1.9	ND	U	g								
1,2-Dichlorobenzene	0.04		1.4	ND	U	g								
2-Methylphenol	0.10		3.6	ND	U	g								
2,2'-Oxybis (1-Chloropropane)	0.03		1.2	ND	U	g								
4-Methylphenol	0.08		2.8	ND	U	g								
N-Nitrosodi-n-propylamine	0.03		1.0	ND	U	g								
Hexachloroethane	0.04		1.4	ND	U	g								
Nitrobenzene	0.02		0.9	ND	U	g								
Isophorone	0.03		1.2	ND	U	g								
2-Nitrophenol	0.03		1.6	ND	U	g								
2,4-Dimethylphenol	0.17		3.4	ND	U	g								
Benzoic Acid	0.06		2.1	ND	U	g								
bis(2-Chloroethoxy) Methane	0.04		1.3	ND	U	g								
2,4-Dichlorophenol	0.04		1.6	ND	U	g								
1,2,4-Trichlorobenzene	0.03		1.2	ND	U	g								
Naphthalene	0.04		1.3	3.5		g								
4-Chloroaniline	0.10		3.7	ND	U	g								
Hexachlorobutadiene	0.03		1.2	ND	U	g								
4-Chloro-3-Methylphenol	0.06		2.1	ND	U	g								
2-Methylnaphthalene	0.03		1.2	17		g								
Hexachlorocyclopentadiene	0.03		0.9	ND	U	g								
2,4,6-Trichlorophenol	0.04		1.5	ND	U	g								
2,4,5-Trichlorophenol	0.03		0.91	ND	U	g								
2-Chloronaphthalene	0.03		1.2	ND	U	g								
2-Nitroaniline	0.02		0.69	ND	U	g								
Dimethyl Phthalate	0.04		1.3	ND	U	g								
Acenaphthylene	0.04		1.5	ND	U	g								
3-Nitroaniline	0.11		4.0	ND	U	g								
Acenaphthene	0.03		1.1	0.5	J									
2,4-Dinitrophenol	0.09		3.2	ND	U	g								
4-Nitrophenol	0.07		3.9	ND	U	g								
Dibenzofuran	0.03		1.1	0.5	J									
2,6-Dinitrotoluene	0.04		1.5	ND	U	g								

Base: Kotzebue LRRS						Table 11.2.1.7							
Site: AOC4						Analytical Data Summary							
Extraction Method: EPA Method 3550						EPA Method 8270							
Analytical Method: EPA Method 8270													
Matrix: Soil													
Units: mg/kg													
			Environmental Samples										
		Field ID:		AOC-4-SB5									
		Batch ID:		H746									
Parameters	MDL		PQL	Result	Validity	Comments							
2,4-Dinitrotoluene	0.02		0.8	ND	U	g							
Diethyl Phthalate	0.04		1.3	ND	U	g							
4-Chlorophenyl Phenyl Ether	0.02		0.8	ND	U	g							
Fluorene	0.03		1.1	0.7	J								
4-Nitroaniline	0.13		4.8	ND	U	g							
4,6-Dinitro-2-Methylphenol	0.09		3.2	ND	U	g							
N-Nitrosodiphenylamine	0.08		3.1	ND	U	g							
4-Bromophenyl Phenyl Ether	0.02		0.8	ND	U	g							
Hexachlorobenzene	0.03		1.2	ND	U	g							
Pentachlorophenol	0.03		1.2	ND	U	g							
Phenanthrene	0.03		1.2	ND	U	g							
Anthracene	0.04		1.6	ND	U	g							
di-n-butyl Phthalate	0.06		2.3	ND	U	g							
Fluroanthene	0.03		1.2	ND	U	g							
Pyrene	0.03		1.0	ND	U	g							
Butylbenzylphthalate	0.02		0.8	ND	U	g							
3,3'-Dichlorobenzidine	0.06		2.1	ND	U	g							
Benzo(a)anthracene	0.04		1.4	ND	U	g							
bis(2-Ethylhexyl) Phthalate	0.04		1.5	ND	U	g							
Chrysene	0.05		1.6	ND	U	g							
di-n-Octylphthalate	0.02		0.8	ND	U	g							
Benzo(b)fluoranthene	0.04		1.6	ND	U	g							
Benzo(k)fluoranthene	0.07		2.7	ND	U	g							
Benzo(a)pyrene	0.04		1.4	ND	U	g							
Indeno(1,2,3-c,d)pyrene	0.03		1.0	ND	U	g							
Dibenzo(a,h)anthracene	0.02		0.8	ND	U	g							
Benzo(g,h,i)perylene	0.03		1.2	ND	U	g							

Base: Kotzebue LRRS						Table 2.8							
Site: AOC4						Analytical Data Summary							
Extraction Method: Not Applicable						EPA Method 9060							
Analytical Method: EPA Method 9060													
Matrix: Soil													
Units: mg/kg													
			Environmental Samples										
		Field ID:	AOC-04-GT5-F5-ms										
		Batch ID:	H671										
Parameters	MDL		PQL	Result	Validity	Comments							
Total Organic Carbon	158		560	61500		g							

ANALYTICAL DATA SUMMARY
SITE SS16-NAVIGATIONAL AID BUILDINGS (AOC6)

Base: Kotzebue LRRS						Table 2.1.1								
Site: AOC6						Analytical Data Summary								
Extraction Method: EPA Method 3550						Method AK102								
Analytical Method: Method AK102														
Matrix: Soil														
Units: mg/kg														
			Environmental Samples											
		Field ID:		AOC6-SB1-2.0				AOC6-SB2-1.0				AOC6-SB2-1.0DL		
		Batch ID:		H590				H590				H590		
Parameters	MDL		PQL	Result	Validity	Comments	PQL	Result	Validity	Comments	PQL	Result	Validity	Comments
												Dilution 10		
Diesel Hydrocarbons	0.9		3.0	84		g	3.1	690 E*	J	n	31	670		g
* Analyte detected above linear calibration range.														

Base: Kotzebue LRRS						Table 2.1.1							
Site: AOC6						Analytical Data Summary							
Extraction Method: EPA Method 3550						Method AK102							
Analytical Method: Method AK102													
Matrix: Soil													
Units: mg/kg													
			Environmental Samples										
		Field ID:		AOC6-SB3-2.0				AOC6-SB3-2.0DL				AOC6-SB4-3.0	
		Batch ID:		H590				H590				H590	
Parameters	MDL		PQL	Result	Validity	Comments	PQL	Result	Validity	Comments	PQL	Result	Validity	Comments
								Dilution 10					
Diesel Hydrocarbons	0.9		3.1	1800 E*	J	n	31	1500	J	g	3.0	930 E*	J	n
AK102 Extended	NA		NA	1300		g	NA	NA	NA	NA	NA	NA	NA	NA
* Analyte detected above linear calibration range.														

Base: Kotzebue LRRS				Table 2.1.1										
Site: AOC6				Analytical Data Summary										
Extraction Method: EPA Method 3550				Method AK102										
Analytical Method: Method AK102														
Matrix: Soil														
Units: mg/kg														
			Environmental Samples											
		Field ID:		AOC6-SB4-3.0DL				AOC6-SB5-1.5				AOC6-SB5-1.5DL		
		Batch ID:		H590				H590				H590		
Parameters	MDL		PQL	Result	Validity	Comments	PQL	Result	Validity	Comments	PQL	Result	Validity	Comments
				Dilution 10								Dilution 100		
Diesel Hydrocarbons	0.9		30	950		g	4.7	S*	NA	NA	470	25000		g
AK102 Extended	NA		NA	NA	NA	NA	NA	830		g	NA	NA	NA	NA
* No value reported due to saturation of the detector.														

Base: Kotzebue LRRS						Table 2.1.1								
Site: AOC6						Analytical Data Summary								
Extraction Method: EPA Method 3550						Method AK102								
Analytical Method: Method AK102														
Matrix: Soil														
Units: mg/kg														
			Environmental Samples											
		Field ID:		AOC6-SB6-1.5				AOC6-SD1				AOC6-SD1DL		
		Batch ID:		H819				H819				H819		
Parameters	MDL		PQL	Result	Validity	Comments	PQL	Result	Validity	Comments	PQL	Result	Validity	Comments
												Dilution 10		
Diesel Hydrocarbons	0.9		7.3	ND	U	g	7.8	3800 E*	J	n	78	3500		g
* Analyte detected above linear calibration range.														

Base: Kotzebue LRRS						Table 2.1.1							
Site: AOC6						Analytical Data Summary							
Extraction Method: EPA Method 3550						Method AK102							
Analytical Method: Method AK102													
Matrix: Soil													
Units: mg/kg													
			Environmental Samples										
		Field ID:		AOC6-SB7-3.0				AOC6-SB7-3.0DL					
		Batch ID:		H909				H909					
Parameters	MDL		PQL	Result	Validity	Comments	PQL	Result	Validity	Comments			
								Dilution 10					
Diesel Hydrocarbons	0.9		7.3	4500 E*	J	n	73	4200		g			
* Analyte detected above linear calibration range.													

Base: Kotzebue LRRS						Table 2.1.2							
Site: AOC6						Analytical Data Summary							
Extraction Method: EPA Method 3050						EPA Method 6010							
Analytical Method: EPA Method 6010													
Matrix: Soil													
Units: mg/kg													
			Environmental Samples										
		Field ID:		AOC6-SB2-1.0				AOC6-SB5-1.5					
		Batch ID:		H590				H590					
Parameters	MDL		PQL	Result	Validity	Comments	PQL	Result	Validity	Comments			
Aluminum	1.2		4	15000		a,c,k	4	12000	J	a,c,k			
Antimony	4		10	ND	UJ	c	10	ND	UJ	c			
Arsenic	4		10	6	J		10	5	J				
Barium	0.6		2	260		g	2	190		g			
Beryllium	0.02		0.1	0.3		g	0.1	0.2		g			
Cadmium	0.7		2	ND	U	g	2	ND	U	g			
Calcium	2.7		9	32000	J	a,c,k	9	34000	J	a,c,k			
Chromium, total	0.24		0.8	26	J	a,c	0.8	22	J	a,c			
Cobalt	0.4		1	12		g	1	9		g			
Copper	0.10		0.3	22		a,k	0.3	18		a,k			
Iron	0.7		2	27000	J	c,k	2	22000	J	c,k			
Magnesium	1.7		6	12000	J	c	5	8500	J	c			
Manganese	0.4		1	500	J	c	1	330	J	c			
Molybdenum	0.27		0.9	ND	U	g	0.9	ND	U	g			
Nickel	0.7		2	40		g	2	32		g			
Potassium	20		70	1400		g	60	1000		g			
Selenium	4		10	9	J		10	5	J				
Silver	0.16		0.5	0.4	J		0.5	0.2	J				
Sodium	8		30	170		a,k	30	160		a,k			
Thallium	1.6		5	14		g	5	10		g			
Vanadium	0.15		0.5	38	J	c	0.5	34	J	c			
Zinc	0.28		1.0	71		a,k	1.0	68		a,k			

Base: Kotzebue LRRS						Table 2.1.2								
Site: AOC6						Analytical Data Summary								
Extraction Method: EPA Method 3050						EPA Method 6010								
Analytical Method: EPA Method 6010														
Matrix: Soil														
Units: mg/kg														
			Environmental Samples											
		Field ID:		AOC6-SD1										
		Batch ID:		H819										
Parameters	MDL		PQL	Result	Validity	Comments								
Aluminum	1.1		3	7000	J	a,c								
Antimony	4		10	ND	UJ	c								
Arsenic	3		10	5	J									
Barium	0.5		2	120		g								
Beryllium	0.02		0.1	0.1		a								
Cadmium	0.6		2	ND	U	g								
Calcium	2.4		8	33000	J	c								
Chromium, total	0.21		0.7	14		g								
Cobalt	0.3		1	6		g								
Copper	0.09		0.3	11		a								
Iron	0.7		2	14000	J	c								
Magnesium	1.5		5	9300	J	c								
Manganese	0.4		1	320	J	c								
Molybdenum	0.24		0.8	ND	U	g								
Nickel	0.6		2	27		g								
Potassium	18		60	400		a								
Selenium	4		10	6	J									
Silver	0.14		0.5	ND	U	a								
Sodium	7		20	200		g								
Thallium	1.4		5	11		g								
Vanadium	0.14		0.4	28		g								
Zinc	0.25		0.9	38		a								

Base: Kotzebue LRRS					Table 2.1.3										
Site: AOC6					Analytical Data Summary										
Extraction Method: See below					EPA Method 7000										
Analytical Method: See below															
Matrix: Soil															
Units: mg/kg															
				Environmental Samples											
			Field ID:		AOC6-SB2-1.0				AOC6-SB5-1.5						
	EPA		Batch ID:		H590				H590						
Parameters	Method	MDL		PQL	Result	Validity	Comments	PQL	Result	Validity	Comments				
Lead	3050/7421	0.15		0.5	9.2*		k	0.5	15**	J	k				
Mercury	7471	0.011		0.04	0.01**	B J	a,k	0.04	0.02	B J	a,k				
* Sample diluted at a factor of 5.00.															
** Sample diluted at a factor of 10.00.															

Base: Kotzebue LRRS						Table 2.1.3		
Site: AOC6						Analytical Data Summary		
Extraction Method: See below						EPA Method 7000		
Analytical Method: See below								
Matrix: Soil								
Units: mg/kg								
				Environmental Samples				
			Field ID:		AOC6-SD1			
	EPA		Batch ID:		H819			
Parameters	Method	MDL		PQL	Result	Validity	Comments	
Lead	3050/7421	0.13		0.4	9.2*	J	c	
Mercury	7471	0.009		0.03	ND	U	g	
* Sample diluted at a factor of 10.00.								

Base: Kotzebue LRRS						Table 2.1.4									
Site: AOC6						Analytical Data Summary									
Extraction Method: EPA Method 3550						EPA Method 8081									
Analytical Method: EPA Method 8081															
Matrix: Soil															
Units: mg/kg															
				Environmental Samples											
			Field ID:		AOC6-SB1-2.0		AOC6-SB1-2.0				AOC6-SB2-1.0		AOC6-SB2-1.0		
			Batch ID:		H590		H590				H590		H590		
	DB-5	DB-608		DB-5	DB-5	DB-608	DB-608			DB-5	DB-5	DB-608	DB-608		
Parameters	MDL	MDL		PQL	Result	PQL	Result	Validity	Comments	PQL	Result	PQL	Result	Validity	Comments
alpha BHC	0.0001	0.0001		0.00021	0.0014	0.00019	0.0016		g	0.00022	0.0032	0.00020	0.0040		g
beta BHC	0.0001	0.0001		0.00032	0.0011	0.00030	ND	U	h	0.00033	ND	0.00031	ND	U	g
delta BHC	0.0001	0.0001		0.00032	0.0015	0.00024	ND	U	h	0.00034	ND	0.00026	ND	U	n
gamma BHC (Lindane)	0.0001	0.0001		0.00026	0.0013	0.00021	ND	U	h	0.00027	0.0053	0.00022	0.0041	J	n
Heptachlor	0.0001	0.0001		0.0003	ND	0.0003	ND	U	g	0.0003	0.0029	0.0003	0.0033	J	n
Aldrin	0.0001	0.0001		0.00020	ND	0.00026	ND	U	g	0.00022	0.0025	0.00028	0.010	J	n
Heptachlor Epoxide	0.0001	0.0001		0.00026	0.00041	0.00032	ND	U	h	0.00027	0.0024	0.00034	0.0035	J	n
Endosulfan I	0.0001	0.0001		0.00037	0.0011	0.00037	0.00065	J	n	0.00039	0.00091	0.00039	ND	U	h
Dieldrin	0.0001	0.0002		0.0004	ND	0.0005	ND	U	g	0.0004	ND	0.0005	ND	U	g
4,4'-DDE	0.0001	0.0002		0.0003	ND	0.0005	ND	U	g	0.0003	ND	0.0005	ND	U	g
Endrin	0.0001	0.0001		0.0003	ND	0.0003	ND	U	g	0.0003	ND	0.0004	ND	U	g
Endosulfan II	0.0002	0.0002		0.0005	ND	0.0005	ND	U	g	0.0006	ND	0.0005	ND	U	g
4,4'-DDD	0.0001	0.0001		0.0004	ND	0.0005	ND	U	g	0.0004	0.0028	0.0005	0.0025		g
Endosulfan Sulfate	0.0002	0.0002		0.0008	ND	0.0008	ND	U	g	0.0009	ND	0.0009	ND	U	g
4,4'-DDT	0.0002	0.0001		0.0008	0.0038	0.0004	0.0040		g	0.0008	0.0049	0.0005	0.0041		g
Methoxychlor	0.0008	0.0011		0.0028	0.0016	0.0036	0.0046	J	n	0.0030	ND	0.0038	ND	U	g
Endrin Aldehyde	0.0002	0.0003		0.0007	0.0008	0.0009	0.0010		g	0.0008	0.0021	0.0009	ND	U	h
gamma-Chlordane	0.0001	0.0001		0.00018	0.0013	0.00026	0.0020	J	n	0.00019	0.0022	0.00028	0.0045	J	n
alpha-Chlordane	0.0001	0.0001		0.00021	ND	0.00038	ND	U	g	0.00022	0.0028	0.00040	ND	U	h
Toxaphene	0.007	0.009		0.02	ND	0.03	ND	U	g	0.03	ND	0.03	ND	U	g
Arochlor 1016	0.009	0.009		0.03	ND	0.03	ND	U	g	0.03	ND	0.03	ND	U	g
Arochlor 1242	0.005	0.008		0.02	ND	0.03	ND	U	g	0.02	ND	0.03	ND	U	g
Arochlor 1248	0.004	0.005		0.01	ND	0.02	ND	U	g	0.01	ND	0.02	ND	U	g
Arochlor 1254	0.011	0.009		0.04	ND	0.03	ND	U	g	0.04	ND	0.03	ND	U	g
Arochlor 1260	0.009	0.010		0.03	ND	0.02	ND	U	g	0.03	ND	0.02	ND	U	g
Arochlor 1221	0.011	0.010		0.03	ND	0.03	ND	U	g	0.04	ND	0.03	ND	U	g
Arochlor 1232	0.005	0.005		0.02	ND	0.00	ND	U	g	0.02	ND	0.00	ND	U	g

Base: Kotzebue LRRS						Table 2.1.4									
Site: AOC6						Analytical Data Summary									
Extraction Method: EPA Method 3550						EPA Method 8081									
Analytical Method: EPA Method 8081															
Matrix: Soil															
Units: mg/kg															
				Environmental Samples											
			Field ID:		AOC6-SB3-2.0		AOC6-SB3-2.0				AOC6-SB3-2.0DL		AOC6-SB3-2.0DL		
			Batch ID:		H590		H590				H590		H590		
	DB-5	DB-608		DB-5	DB-5	DB-608	DB-608			DB-5	DB-5	DB-608	DB-608		
Parameters	MDL	MDL		PQL	Result	PQL	Result	Validity	Comments	PQL	Result Dilution 10	PQL	Result Dilution 10	Validity	Comments
alpha BHC	0.0001	0.0001		0.00022	0.018	0.00020	0.56	J	b, n	0.0022	0.018	0.0020	0.66	J	b,n
beta BHC	0.0001	0.0001		0.00033	0.22	0.00031	ND	U	b,h	0.0033	ND	0.0031	ND	UJ	b
delta BHC	0.0001	0.0001		0.00034	0.048	0.00026	ND	U	b,h	0.0034	ND	0.0026	ND	UJ	b
gamma BHC (Lindane)	0.0001	0.0001		0.00027	ND	0.00022	ND	U	g	0.0027	ND	0.0023	ND	UJ	b
Heptachlor	0.0001	0.0001		0.0003	0.023	0.0003	0.058	J	b, n	0.0031	0.0022	0.0031	ND	U	b,h
Aldrin	0.0001	0.0001		0.00022	ND	0.00028	ND	U	g	0.0022	ND	0.0028	ND	UJ	b
Heptachlor Epoxide	0.0001	0.0001		0.00027	0.047	0.00034	ND	U	b,h	0.0027	ND	0.0034	ND	UJ	b
Endosulfan I	0.0001	0.0001		0.00040	ND	0.00040	ND	U	g	0.0040	ND	0.0040	ND	UJ	b
Dieldrin	0.0001	0.0002		0.0004	ND	0.0005	ND	U	g	0.0042	ND	0.0052	ND	UJ	b
4,4'-DDE	0.0001	0.0002		0.0003	0.21	0.0005	0.090	J	b	0.0035	0.064	0.0052	0.064	J	b
Endrin	0.0001	0.0001		0.0003	0.056	0.0004	0.20	J	b,n	0.0035	0.030	0.0036	0.18	J	b,n
Endosulfan II	0.0002	0.0002		0.0006	ND	0.0006	ND	U	g	0.0057	ND	0.0055	ND	UJ	b
4,4'-DDD	0.0001	0.0001		0.0004	0.35	0.0005	0.17	J	b	0.0042	0.14	0.0050	0.14	J	b
Endosulfan Sulfate	0.0002	0.0002		0.0009	ND	0.0009	ND	U	g	0.0086	ND	0.0086	ND	UJ	b
4,4'-DDT	0.0002	0.0001		0.0008	0.51 E*	0.0005	0.51 E*	J	b,n	0.0080	0.33	0.0046	0.30	J	b
Methoxychlor	0.0008	0.0011		0.0030	ND	0.0038	ND	U	g	0.030	ND	0.038	ND	UJ	b
Endrin Aldehyde	0.0002	0.0003		0.0008	ND	0.0009	ND	U	g	0.0078	ND	0.0092	ND	UJ	b
gamma-Chlordane	0.0001	0.0001		0.00019	0.054	0.00028	ND	U	b,h	0.0019	ND	0.0028	ND	UJ	b
alpha-Chlordane	0.0001	0.0001		0.00022	0.037	0.00040	ND	U	b,h	0.0022	ND	0.0040	ND	UJ	b
Toxaphene	0.007	0.009		0.03	ND	0.03	ND	U	g	0.26	ND	0.32	ND	UJ	b
Arochlor 1016	0.009	0.009		1.1	ND	1.1	ND	U	g	0.31	ND	0.30	ND	UJ	b
Arochlor 1242	0.005	0.008		1.1	ND	1.1	ND	U	g	0.19	ND	0.27	ND	UJ	b
Arochlor 1248	0.004	0.005		1.0	ND	1.0	ND	U	g	0.12	ND	0.17	ND	UJ	b
Arochlor 1254	0.011	0.009		0.73	ND	0.73	ND	U	g	0.37	ND	0.32	ND	UJ	b
Arochlor 1260	0.009	0.010		0.36	ND	0.36	ND	U	g	0.30	ND	0.16	ND	UJ	b
Arochlor 1221	0.011	0.010		4.4	ND	4.4	ND	U	g	0.37	ND	0.33	ND	UJ	b
Arochlor 1232	0.005	0.005		2.2	ND	2.2	ND	U	g	0.16	ND	0.02	ND	UJ	b

* Analyte detected above linear calibration range.

Base: Kotzebue LRRS

Site: AOC6

Extraction Method: EPA Method 3550

Analytical Method: EPA Method 8081

Matrix: Soil

Units: mg/kg

Table 2.1.4
Analytical Data Summary
EPA Method 8081

				Environmental Samples											
			Field ID:		AOC6-SB4-3.0		AOC6-SB4-3.0				AOC6-SB4-3.0DL		AOC6-SB4-3.0DL		
			Batch ID:		H590		H590				H590		H590		
	DB-5	DB-608		DB-5	DB-5	DB-608	DB-608			DB-5	DB-5	DB-608	DB-608		
Parameters	MDL	MDL		PQL	Result	PQL	Result	Validity	Comments	PQL	Result Dilution 20	PQL	Result Dilution 20	Validity	Comments
alpha BHC	0.0001	0.0001		0.00021	0.013	0.00019	0.46	J	b, n	0.0043	0.032	0.0038	0.56	J	b, n
beta BHC	0.0001	0.0001		0.00032	0.18	0.00030	ND	U	b,h	0.0065	0.24	0.0060	ND	U	b,h
delta BHC	0.0001	0.0001		0.00033	0.038	0.00025	ND	U	b,h	0.0066	0.096	0.0050	ND	U	b,h
gamma BHC (Lindane)	0.0001	0.0001		0.00026	ND	0.00022	ND	U	g	0.0052	ND	0.0043	ND	U	g
Heptachlor	0.0001	0.0001		0.0003	0.015	0.0003	0.042	J	b,n	0.0060	ND	0.0059	ND	U	g
Aldrin	0.0001	0.0001		0.00021	ND	0.00027	ND	U	g	0.0042	ND	0.0054	ND	U	g
Heptachlor Epoxide	0.0001	0.0001		0.00026	0.034	0.00033	ND	U	b,h	0.0052	0.16	0.0066	ND	U	b,h
Endosulfan I	0.0001	0.0001		0.00038	ND	0.00038	ND	U	g	0.0076	ND	0.0076	ND	U	g
Dieldrin	0.0001	0.0002		0.0004	ND	0.0005	ND	U	g	0.0082	ND	0.010	ND	U	g
4,4'-DDE	0.0001	0.0002		0.0003	0.18 E*	0.0005	0.10 E*	J	b,n	0.0067	0.30	0.010	0.066	J	b,n
Endrin	0.0001	0.0001		0.0003	0.054	0.0003	0.18	J	b,n	0.0067	ND	0.0069	ND	U	g
Endosulfan II	0.0002	0.0002		0.0005	0.10	0.00	ND	U	b,h	0.011	0.16	0.011	ND	U	b,h
4,4'-DDD	0.0001	0.0001		0.0004	0.29 E*	0.0005	0.20 E*	J	b,n	0.0082	0.54	0.0097	0.099	J	b,n
Endosulfan Sulfate	0.0002	0.0002		0.0008	ND	0.0008	ND	U	g	0.017	ND	0.017	ND	U	g
4,4'-DDT	0.0002	0.0001		0.0008	0.62 E*	0.0004	0.64 E*	J	b,n	0.016	0.41	0.0089	0.34	J	b
Methoxychlor	0.0008	0.0011		0.0029	0.061	0.00	ND	U	b,h	0.058	ND	0.073	ND	U	g
Endrin Aldehyde	0.0002	0.0003		0.0008	ND	0.0009	ND	U	g	0.015	ND	0.018	ND	U	g
gamma-Chlordane	0.0001	0.0001		0.00018	0.042	0.00027	ND	U	b,h	0.0036	0.037	0.0054	ND	U	b,h
alpha-Chlordane	0.0001	0.0001		0.00021	0.030	0.00038	ND	U	b,h	0.0043	0.015	0.0076	ND	U	b,h
Toxaphene	0.007	0.009		0.02	ND	0.03	ND	U	g	0.50	ND	0.61	ND	U	g
Arochlor 1016	0.009	0.009		1.8	ND	1.8	ND	U	g	0.59	ND	0.58	ND	U	g
Arochlor 1242	0.005	0.008		1.8	ND	1.8	ND	U	g	0.36	ND	0.51	ND	U	g
Arochlor 1248	0.004	0.005		1.8	ND	1.8	ND	U	g	0.24	ND	0.32	ND	U	g
Arochlor 1254	0.011	0.009		0.70	ND	0.70	ND	U	g	0.72	ND	0.61	ND	U	g
Arochlor 1260	0.009	0.010		0.35	ND	0.35	ND	U	g	0.58	ND	0.31	ND	U	g
Arochlor 1221	0.011	0.010		4.2	ND	4.2	ND	U	g	0.71	ND	0.64	ND	U	g
Arochlor 1232	0.005	0.005		2.1	ND	2.1	ND	U	g	[illegible]	ND	0.03	ND	U	g

* Analyte detected above linear calibration range.

Base: Kotzebue LRRS							Table 2.1.4								
Site: AOC6							Analytical Data Summary								
Extraction Method: EPA Method 3550							EPA Method 8081								
Analytical Method: EPA Method 8081															
Matrix: Soil															
Units: mg/kg															
				Environmental Samples											
			Field ID:		AOC6-SB5-1.5		AOC6-SB5-1.5								
			Batch ID:		H590		H590								
	DB-5	DB-608		DB-5	DB-5	DB-608	DB-608								
Parameters	MDL	MDL		PQL	Result	PQL	Result	Validity	Comments						
alpha BHC	0.0001	0.0001		0.00034	ND	0.00030	ND	U	g						
beta BHC	0.0001	0.0001		0.00051	0.0020	0.00048	0.0014	J	n						
delta BHC	0.0001	0.0001		0.00052	ND	0.00039	ND	U	g						
gamma BHC (Lindane)	0.0001	0.0001		0.00042	0.0023	0.00034	ND	U	h						
Heptachlor	0.0001	0.0001		0.0005	ND	0.0005	ND	U	g						
Aldrin	0.0001	0.0001		0.00033	ND	0.00043	ND	U	g						
Heptachlor Epoxide	0.0001	0.0001		0.00042	0.0018	0.00052	ND	U	h						
Endosulfan I	0.0001	0.0001		0.00060	ND	0.00060	ND	U	g						
Dieldrin	0.0001	0.0002		0.0006	ND	0.0008	ND	U	g						
4,4'-DDE	0.0001	0.0002		0.0005	0.0030	0.0008	ND	U	h						
Endrin	0.0001	0.0001		0.0005	0.0012	0.0005	ND	U	h						
Endosulfan II	0.0002	0.0002		0.0009	ND	0.0008	ND	U	g						
4,4'-DDD	0.0001	0.0001		0.0006	0.0026	0.0008	0.0021		g						
Endosulfan Sulfate	0.0002	0.0002		0.0013	ND	0.0013	ND	U	g						
4,4'-DDT	0.0002	0.0001		0.0012	0.0042	0.0007	0.0050		g						
Methoxychlor	0.0008	0.0011		0.0046	ND	0.0058	ND	U	g						
Endrin Aldehyde	0.0002	0.0003		0.0012	0.0017	0.0014	ND	U	h						
gamma-Chlordane	0.0001	0.0001		0.00029	0.00022	0.00043	0.00067	J	n						
alpha-Chlordane	0.0001	0.0001		0.00034	0.00017	0.00060	0.00083	J	n						
Toxaphene	0.007	0.009		0.04	ND	0.05	ND	U	g						
Arochlor 1016	0.009	0.009		0.05	ND	0.05	ND	U	g						
Arochlor 1242	0.005	0.008		0.03	ND	0.04	ND	U	g						
Arochlor 1248	0.004	0.005		0.02	ND	0.03	ND	U	g						
Arochlor 1254	0.011	0.009		0.06	0.03	0.05	0.03	J							
Arochlor 1260	0.009	0.010		0.05	ND	0.02	ND	U	g						
Arochlor 1221	0.011	0.010		0.06	ND	0.05	ND	U	g						
Arochlor 1232	0.005	0.005		0.02	ND	0.00	ND	U	g						

Base: Kotzebue LRRS							Table 2.1.4			
Site: AOC6							Analytical Data Summary			
Extraction Method: EPA Method 3550							EPA Method 8081			
Analytical Method: EPA Method 8081										
Matrix: Soil										
Units: mg/kg										
				Environmental Samples						
			Field ID:		AOC6-SD1		AOC6-SD1			
			Batch ID:		H819		H819			
	DB-5	DB-608		DB-5	DB-5	DB-608	DB-608			
Parameters	MDL	MDL		PQL	Result	PQL	Result	Validity	Comments	
alpha BHC	0.0001	0.0001		0.00020	ND	0.00018	ND	U	g	
beta BHC	0.0001	0.0001		0.00030	0.0015	0.00028	ND	U	h	
delta BHC	0.0001	0.0001		0.00031	0.0015	0.00023	ND	U	h	
gamma BHC (Lindane)	0.0001	0.0001		0.00025	0.0015	0.00020	ND	U	h	
Heptachlor	0.0001	0.0001		0.0003	ND	0.0003	ND	U	g	
Aldrin	0.0001	0.001		0.00020	ND	0.00025	ND	U	g	
Heptachlor Epoxide	0.0001	0.0001		0.00025	0.0059	0.00031	ND	U	h	
Endosulfan I	0.0001	0.0001		0.00036	ND	0.00036	ND	U	g	
Dieldrin	0.0001	0.0002		0.0004	ND	0.0005	ND	U	g	
4,4'-DDE	0.0001	0.002		0.0003	0.0030	0.0005	0.0024		g	
Endrin	0.0001	0.0001		0.0003	0.0006	0.0003	0.0012	J	n	
Endosulfan II	0.0002	0.0002		0.0005	ND	0.0005	ND	U	a	
4,4'-DDD	0.0001	0.0001		0.0004	0.0092	0.0005	0.0090		g	
Endosulfan Sulfate	0.0002	0.0002		0.0008	ND	0.0008	ND	U	g	
4,4'-DDT	0.0002	0.0001		0.0007	0.0025	0.0004	0.0028		g	
Methoxychlor	0.0008	0.0011		0.0027	ND	0.0034	ND	U	g	
Endrin Aldehyde	0.0002	0.0003		0.0007	ND	0.0008	ND	U	g	
gamma-Chlordane	0.0001	0.0001		0.00017	0.00070	0.00025	0.00093	J	n	
alpha-Chlordane	0.0001	0.0001		0.00020	ND	0.00036	ND	U	g	
Toxaphene	0.007	0.009		0.02	ND	0.03	ND	U	g	
Arochlor 1016	0.009	0.009		0.03	ND	0.03	ND	U	g	
Arochlor 1242	0.005	0.008		0.02	ND	0.02	ND	U	g	
Arochlor 1248	0.004	0.005		0.01	ND	0.02	ND	U	g	
Arochlor 1254	0.011	0.009		0.03	0.02	0.03	0.02	J		
Arochlor 1260	0.009	0.010		0.03	0.01	0.01	0.02	J		
Arochlor 1221	0.011	0.010		0.03	ND	0.03	ND	U	g	
Arochlor 1232	0.005	0.005		0.01	ND	0.01	ND	U	g	

Base: Kotzebue LRRS							Table 2.2.4			
Site: AOC6							Analytical Data Summary			
Extraction Method: EPA Method 3510							EPA Method 8081			
Analytical Method: EPA Method 8081										
Matrix: Water										
Units: ug/L										
				Environmental Samples						
			Field ID:		AOC6-SW1		AOC6-SW1			
			Batch ID:		H819		H819			
	DB-5	DB-608		DB-5	DB-5	DB-608	DB-608			
Parameters	MDL	MDL		PQL	Result	PQL	Result	Validity	Comments	
alpha BHC	0.002	0.001		0.01	0.05	0.01	ND	U	c,h	
beta BHC	0.002	0.003		0.01	ND	0.01	ND	UJ	c	
delta BHC	0.002	0.002		0.01	ND	0.01	ND	UJ	c	
gamma BHC (Lindane)	0.002	0.002		0.01	ND	0.01	ND	UJ	c	
Heptachlor	0.004	0.004		0.01	ND	0.01	ND	UJ	c	
Aldrin	0.005	0.010		0.02	ND	0.03	ND	UJ	c	
Heptachlor Epoxide	0.003	0.002		0.01	0.01	0.01	ND	U	c,h	
Endosulfan I	0.004	0.004		0.01	ND	0.01	ND	UJ	c	
Dieldrin	0.004	0.005		0.02	ND	0.01	ND	UJ	c	
4,4'-DDE	0.009	0.010		0.029	ND	0.032	ND	UJ	c	
Endrin	0.004	0.004		0.014	ND	0.012	ND	UJ	c	
Endosulfan II	0.007	0.005		0.021	0.020	0.015	ND	U	c,h	
4,4'-DDD	0.005	0.004		0.017	ND	0.014	ND	UJ	c	
Endosulfan Sulfate	0.003	0.003		0.01	ND	0.01	ND	UJ	c	
4,4'-DDT	0.010	0.008		0.031	ND	0.026	ND	UJ	c	
Methoxychlor	0.038	0.035		0.12	ND	0.11	ND	UJ	c	
Endrin Aldehyde	0.010	0.010		0.031	ND	0.031	ND	UJ	c	
gamma-Chlordane	0.003	0.003		0.01	ND	0.01	ND	UJ	c	
alpha-Chlordane	0.003	0.004		0.01	ND	0.01	ND	UJ	c	
Toxaphene	0.25	0.15		0.79	ND	0.46	ND	UJ	c	
Arochlor 1016	0.3	0.3		0.9	ND	0.9	ND	UJ	c	
Arochlor 1242	0.2	0.3		0.7	ND	1.0	ND	UJ	c	
Arochlor 1248	0.3	0.2		0.8	ND	0.7	ND	UJ	c	
Arochlor 1254	0.2	0.3		1.0	ND	1.0	ND	UJ	c	
Arochlor 1260	0.3	0.3		1.0	ND	0.9	ND	UJ	c	
Arochlor 1221	0.2	0.2		0.8	ND	0.8	ND	UJ	c	
Arochlor 1232	0.3	0.3		0.8	ND	1.1	ND	UJ	c	

Base: Kotzebue LRRS						Table 2.1.6								
Site: AOC6						Analytical Data Summary								
Extraction Method: EPA Method 8260						EPA Method 8260								
Analytical Method: EPA Method 8260														
Matrix: Soil														
Units: mg/kg														
			Environmental Samples											
		Field ID:		AOC6-SB1-2.0				AOC6-SB2-1.0				AOC6-SB3-2.0		
		Batch ID:		H590				H590				H590		
Parameters	MDL		PQL	Result	Validity	Comments	PQL	Result	Validity	Comments	PQL	Result	Validity	Comments
trans-1,3-Dichloropropene	0.0005		0.28	ND	U	g	0.27	ND	U	g	0.002	ND	U	g
2-Chloroethyl Vinyl Ether	0.0006		0.34	ND	U	g	0.32	ND	U	g	0.002	ND	U	g
Bromoform	0.0013		0.67	ND	U	g	0.63	ND	U	g	0.004	ND	U	g
Methyl Isobutyl Ketone	0.0025		0.80	ND	U	g	0.75	ND	U	g	0.005	ND	U	g
2-Hexanone	0.0027		1.5	ND	U	g	1.4	ND	U	g	0.009	ND	U	g
Tetrachloroethylene (pce)	0.0009		0.48	ND	U	g	0.45	ND	U	g	0.003	ND	U	g
1,1,2,2-Tetrachloroethane	0.0009		0.48	ND	U	g	0.46	ND	U	g	0.0030	ND	U	g
Toluene	0.0009		0.48	ND	U	g	0.46	ND	U	g	0.0030	0.0014	J	
Chlorobenzene	0.0007		0.38	ND	U	g	0.36	ND	U	g	0.002	ND	U	g
Ethylbenzene	0.0004		0.23	ND	U	g	0.22	ND	U	g	0.0014	ND	U	g
Styrene	0.0006		0.34	ND	U	g	0.32	ND	U	g	0.002	ND	U	g
1,1,2-Trichloro-1,2,2-trifluoroethane	0.0007		0.39	ND	U	g	0.37	ND	U	g	0.002	ND	U	g
Xylenes, total	0.0020		1.1	ND	U	g	1.0	ND	U	g	0.007	ND	U	g
1,1,1,2-Tetrachloroethane	0.0010		0.53	ND	U	g	0.50	ND	U	g	0.003	ND	U	g
1,2,3-Trichloropropane	0.0023		1.2	ND	U	g	1.1	ND	U	g	0.007	ND	U	g
Bromochloromethane	0.0007		0.36	ND	U	g	0.34	ND	U	g	0.002	ND	U	g
1-Chlorohexane	0.0007		0.35	ND	U	g	0.33	ND	U	g	0.002	ND	U	g
Bromobenzene	0.0007		0.39	ND	U	g	0.39	ND	U	g	0.0024	ND	U	g

Base: Kotzebue LRRS						Table 2.1.6							
Site: AOC6						Analytical Data Summary							
Extraction Method: EPA Method 8260						EPA Method 8260							
Analytical Method: EPA Method 8260													
Matrix: Soil													
Units: mg/kg													
			Environmental Samples										
		Field ID:		AOC6-SB4-3.0				AOC6-SB5-1.5					
		Batch ID:		H590				H590					
Parameters	MDL		PQL	Result	Validity	Comments	PQL	Result	Validity	Comments			
Chloromethane	0.0009		0.52	ND	U	g	0.39	ND	U	g			
Bromomethane	0.0008		0.48	ND	U	g	0.36	ND	U	g			
Vinyl Chloride	0.0010		0.56	ND	U	g	0.42	ND	U	g			
Chloroethane	0.0010		0.59	ND	U	g	0.44	ND	U	g			
Methylene Chloride	0.0009		0.50	0.28	J	a	0.38	0.34	J	a			
Acetone	0.0039		2.3	ND	U	k	1.7	ND	U	k			
Carbon Disulfide	0.0005		0.32	ND	U	g	0.24	ND	U	g			
1,1-Dichloroethene	0.0012		0.68	ND	U	g	0.51	ND	U	g			
1,1-Dichloroethane	0.0004		0.21	ND	U	g	0.16	ND	U	g			
trans-1,2-Dichloroethene	0.0009		0.52	ND	U	g	0.39	ND	U	g			
cis-1,2-Dichloroethylene	0.0011		0.67	ND	U	g	0.50	ND	U	g			
Chloroform	0.0005		0.27	ND	U	g	0.20	ND	U	g			
1,2-Dichloroethane	0.0005		0.29	ND	U	g	0.22	ND	U	g			
Methyl Ethyl Ketone (2-butanone)	0.0025		1.4	ND	U	g	1.1	ND	U	g			
1,1,1-Trichloroethane	0.0004		0.25	ND	U	g	0.19	ND	U	g			
Carbon Tetrachloride	0.0010		0.57	ND	U	g	0.43	ND	U	g			
Vinyl Acetate	0.0016		0.94	ND	U	g	0.71	ND	U	g			
Bromodichloromethane	0.0006		0.38	ND	U	g	0.29	ND	U	g			
1,2-Dichloropropane	0.0008		0.49	ND	U	g	0.37	ND	U	g			
cis-1,3-Dichloropropene	0.0007		0.40	ND	U	g	0.30	ND	U	g			
Trichloroethylene (tce)	0.0005		0.32	ND	U	g	0.24	ND	U	g			
Dibromochloromethane	0.0003		0.20	ND	U	g	0.15	ND	U	g			
1,1,2-Trichloroethane	0.0007		0.40	ND	U	g	0.30	ND	U	g			
Benzene	0.0005		0.28	ND	U	g	0.21	ND	U	g			

Base: Kotzebue LRRS						Table 2.1.5							
Site: AOC6						Analytical Data Summary							
Extraction Method: EPA Method 8260						EPA Method 8260							
Analytical Method: EPA Method 8260													
Matrix: Soil													
Units: mg/kg													
			Environmental Samples										
		Field ID:		AOC6-SB4-3.0				AOC6-SB5-1.5					
		Batch ID:		H590				H590					
Parameters	MDL		PQL	Result	Validity	Comments	PQL	Result	Validity	Comments			
trans-1,3-Dichloropropene	0.0005		0.31	ND	U	g	0.23	ND	U	g			
2-Chloroethyl Vinyl Ether	0.0006		0.37	ND	U	g	0.28	ND	U	g			
Bromoform	0.0013		0.74	ND	U	g	0.55	ND	U	g			
Methyl Isobutyl Ketone	0.0025		0.88	ND	U	g	0.66	ND	U	g			
2-Hexanone	0.0027		1.6	ND	U	g	1.2	ND	U	g			
Tetrachloroethylene (pce)	0.0009		0.53	ND	U	g	0.39	ND	U	g			
1,1,2,2-Tetrachloroethane	0.0009		0.53	ND	U	g	0.40	ND	U	g			
Toluene	0.0009		0.53	ND	U	g	0.40	ND	U	g			
Chlorobenzene	0.0007		0.42	ND	U	g	0.32	ND	U	g			
Ethylbenzene	0.0004		0.25	ND	U	g	0.19	ND	U	g			
Styrene	0.0006		0.37	ND	U	g	0.28	ND	U	g			
1,1,2-Trichloro-1,2,2-trifluoroethane	0.0007		0.43	ND	U	g	0.32	ND	U	g			
Xylenes, total	0.0020		1.2	ND	U	g	0.88	ND	U	g			
1,1,1,2-Tetrachloroethane	0.0010		0.59	ND	U	g	0.44	ND	U	g			
1,2,3-Trichloropropane	0.0023		1.3	ND	U	g	0.99	ND	U	g			
Bromochloromethane	0.0007		0.39	ND	U	g	0.29	ND	U	g			
1-Chlorohexane	0.0007		0.38	ND	U	g	0.29	ND	U	g			
Bromobenzene	0.0007		0.43	ND	U	g	0.32	ND	U	g			

Base: Kotzebue LRRS						Table 2.1.5							
Site: AOC6						Analytical Data Summary							
Extraction Method: EPA Method 8260						EPA Method 8260							
Analytical Method: EPA Method 8260													
Matrix: Soil													
Units: mg/kg													
			Environmental Samples										
		Field ID:		AOC6-SD1									
		Batch ID:		H819									
Parameters	MDL		PQL	Result	Validity	Comments							
Chloromethane	0.0009		0.38	ND	U	g							
Bromomethane	0.0008		0.36	ND	U	g							
Vinyl Chloride	0.0010		0.41	ND	U	g							
Chloroethane	0.0010		0.44	ND	U	g							
Methylene Chloride	0.0009		0.38	0.31	B J	a,k							
Acetone	0.0039		1.7	ND	U	a,k							
Carbon Disulfide	0.0005		0.24	ND	U	g							
1,1-Dichloroethene	0.0012		0.51	ND	U	g							
1,1-Dichloroethane	0.0004		0.16	ND	U	g							
trans-1,2-Dichloroethene	0.0009		0.38	ND	U	g							
cis-1,2-Dichloroethylene	0.0011		0.50	ND	U	g							
Chloroform	0.0005		0.20	ND	U	g							
1,2-Dichloroethane	0.0005		0.22	ND	U	g							
Methyl Ethyl Ketone (2-butanone)	0.0025		1.1	ND	U	g							
1,1,1-Trichloroethane	0.0004		0.19	ND	U	g							
Carbon Tetrachloride	0.0010		0.43	ND	U	g							
Vinyl Acetate	0.0016		0.70	ND	U	g							
Bromodichloromethane	0.0006		0.28	ND	U	g							
1,2-Dichloropropane	0.0008		0.37	ND	U	g							
cis-1,3-Dichloropropene	0.0007		0.30	ND	U	g							
Trichloroethylene (tce)	0.0005		0.24	ND	U	g							
Dibromochloromethane	0.0003		0.15	ND	U	g							
1,1,2-Trichloroethane	0.0007		0.30	ND	U	g							
Benzene	0.0005		0.20	ND	U	g							

Base: Kotzebue LRRS						Table 2.1.5								
Site: AOC6						Analytical Data Summary								
Extraction Method: EPA Method 8260						EPA Method 8260								
Analytical Method: EPA Method 8260														
Matrix: Soil														
Units: mg/kg														
			Environmental Samples											
		Field ID:		AOC6-SD1										
		Batch ID:		H819										
Parameters	MDL		PQL	Result	Validity	Comments								
trans-1,3-Dichloropropene	0.0005		0.23	ND	U	g								
2-Chloroethyl Vinyl Ether	0.0006		0.28	ND	U	g								
Bromoform	0.0013		0.55	ND	U	g								
Methyl Isobutyl Ketone	0.0025		0.65	ND	U	g								
2-Hexanone	0.0027		1.2	ND	U	g								
Tetrachloroethylene (pce)	0.0009		0.39	ND	U	g								
1,1,2,2-Tetrachloroethane	0.0009		0.40	ND	U	g								
Toluene	0.0009		0.40	ND	U	g								
Chlorobenzene	0.0007		0.31	ND	U	g								
Ethylbenzene	0.0004		0.19	ND	U	g								
Styrene	0.0006		0.28	ND	U	g								
1,1,2-Trichloro-1,2,2-trifluoroethane	0.007		0.32	ND	U	g								
Xylenes, total	0.002		0.88	ND	U	g								
1,1,1,2-Tetrachloroethane	0.0010		0.44	ND	U	g								
1,2,3-Trichloropropane	0.0023		0.99	ND	U	g								
Bromochloromethane	0.0007		0.29	ND	U	g								
1-Chlorohexane	0.0007		0.29	ND	U	g								
Bromobenzene	0.0007		0.32	ND	U	g								

Base: Kotzebue LRRS						Table 13.2.1.6								
Site: AOC6						Analytical Data Summary								
Extraction Method: EPA Method 3550						EPA Method 8270								
Analytical Method: EPA Method 8270														
Matrix: Soil														
Units: mg/kg														
			Environmental Samples											
		Field ID:		AOC6-SB1-2.0				AOC6-SB2-1.0				AOC6-SB3-2.0		
		Batch ID:		H590				H590				H590		
Parameters	MDL		PQL	Result	Validity	Comments	PQL	Result	Validity	Comments	PQL	Result	Validity	Comments
								Dilution 5				Dilution 5		
Phenol	0.05		0.2	ND	U	g	0.9	ND	U	g	0.9	ND	U	g
bis(2-Chloroethyl) Ether	0.04		0.1	ND	U	g	0.7	ND	U	g	0.7	ND	U	g
2-Chlorophenol	0.07		0.2	ND	U	g	1.2	ND	U	g	1.2	ND	U	g
1,3-Dichlorobenzene	0.04		0.1	ND	U	k	0.7	ND	U	k	0.7	ND	U	k
1,4-Dichlorobenzene	0.03		0.1	ND	U	g	0.4	ND	U	g	0.4	ND	U	g
Benzyl Alcohol	0.05		0.2	ND	U	g	0.9	ND	U	g	0.9	ND	U	g
1,2-Dichlorobenzene	0.04		0.1	ND	U	g	0.7	ND	U	g	0.7	ND	U	g
2-Methylphenol	0.10		0.3	ND	U	g	1.7	ND	U	g	1.7	ND	U	g
2,2'-Oxybis (1-Chloropropane)	0.03		0.1	ND	U	g	0.6	ND	U	g	0.6	ND	U	g
4-Methylphenol	0.08		0.3	ND	U	g	1.3	ND	U	g	1.3	ND	U	g
N-Nitrosodi-n-propylamine	0.03		0.1	ND	U	g	0.5	ND	U	g	0.5	ND	U	g
Hexachloroethane	0.04		0.1	ND	U	g	0.7	ND	U	g	0.7	ND	U	g
Nitrobenzene	0.02		0.1	ND	U	g	2.4	ND	U	g	0.4	ND	U	g
Isophorone	0.03		0.1	ND	U	g	7.2	ND	U	g	0.6	ND	U	g
2-Nitrophenol	0.03		0.1	ND	U	g	0.6	ND	U	g	0.6	ND	U	g
2,4-Dimethylphenol	0.17		0.3	ND	U	g	1.6	ND	U	g	1.6	ND	U	g
Benzoic Acid	0.06		0.19	ND	U	g	2.4	ND	U	g	0.98	ND	U	g
bis(2-Chloroethoxy) Methane	0.04		0.1	ND	U	g	0.6	ND	U	g	0.6	ND	U	g
2,4-Dichlorophenol	0.04		0.1	ND	U	g	1.0	ND	U	g	0.8	ND	U	g
1,2,4-Trichlorobenzene	0.03		0.1	ND	U	g	1.6	ND	U	g	0.6	ND	U	g
Naphthalene	0.04		0.1	ND	U	g	1.2	ND	U	g	0.6	ND	U	g
4-Chloroaniline	0.10		0.3	ND	U	g	1.8	ND	U	g	1.8	ND	U	g
Hexachlorobutadiene	0.03		0.1	ND	U	g	0.6	ND	U	g	0.6	ND	U	g
4-Chloro-3-Methylphenol	0.06		0.2	ND	U	g	1.0	ND	U	g	1.0	ND	U	g
2-Methylnaphthalene	0.03		0.1	0.04	J		0.6	1.0		g	0.6	ND	U	g
Hexachlorocyclopentadiene	0.03		0.1	ND	U	g	0.4	ND	U	g	0.4	ND	U	g
2,4,6-Trichlorophenol	0.04		0.1	ND	U	g	0.7	ND	U	g	0.7	ND	U	g
2,4,5-Trichlorophenol	0.03		0.09	ND	U	g	0.44	ND	U	g	0.44	ND	U	g
2-Chloronaphthalene	0.03		0.1	ND	U	g	0.6	ND	U	g	0.6	ND	U	g
2-Nitroaniline	0.02		0.06	ND	U	g	0.33	ND	U	g	0.33	ND	U	g
Dimethyl Phthalate	0.04		0.1	ND	U	g	0.6	ND	U	g	0.6	ND	U	g
Acenaphthylene	0.04		0.1	ND	U	g	0.7	ND	U	g	0.7	ND	U	g
3-Nitroaniline	0.11		0.37	ND	U	g	1.9	ND	U	g	1.9	ND	U	g
Acenaphthene	0.03		0.1	ND	U	g	0.5	0.6		g	0.5	ND	U	g
2,4-Dinitrophenol	0.09		0.30	ND	U	g	1.6	ND	U	g	1.5	ND	U	g
4-Nitrophenol	0.07		0.22	ND	U	g	1.1	ND	U	g	1.1	ND	U	g
Dibenzofuran	0.03		0.1	ND	U	g	0.5	ND	U	g	0.5	ND	U	g
2,6-Dinitrotoluene	0.04		0.1	ND	U	g	0.7	ND	U	g	0.7	ND	U	g

Base: Kotzebue LRRS						Table 13.2.1.6								
Site: AOC6						Analytical Data Summary								
Extraction Method: EPA Method 3550						EPA Method 8270								
Analytical Method: EPA Method 8270														
Matrix: Soil														
Units: mg/kg														
			Environmental Samples											
		Field ID:		AOC6-SB1-2.0				AOC6-SB2-1.0				AOC6-SB3-2.0		
		Batch ID:		H590				H590				H590		
Parameters	MDL		PQL	Result	Validity	Comments	PQL	Result	Validity	Comments	PQL	Result	Validity	Comments
								Dilution 5				Dilution 5		
2,4-Dinitrotoluene	0.02		0.1	ND	U	g	0.4	ND	U	g	0.4	ND	U	g
Diethyl Phthalate	0.04		0.1	ND	U	g	0.6	ND	U	g	0.6	ND	U	g
4-Chlorophenyl Phenyl Ether	0.02		0.1	ND	U	g	0.7	ND	U	g	0.4	ND	U	g
Fluorene	0.03		0.1	ND	U	g	0.3	ND	J		0.5	ND	U	g
4-Nitroaniline	0.13		0.45	ND	U	g	2.3	ND	U	g	2.3	ND	U	g
4,6-Dinitro-2-Methylphenol	0.09		0.30	ND	U	g	1.5	ND	U	g	1.5	ND	U	g
N-Nitrosodiphenylamine	0.08		0.3	ND	U	g	1.5	ND	U	g	1.5	ND	U	g
4-Bromophenyl Phenyl Ether	0.02		0.1	ND	U	g	0.4	ND	U	g	0.4	ND	U	g
Hexachlorobenzene	0.03		0.1	ND	U	g	0.6	ND	U	g	0.6	ND	U	g
Pentachlorophenol	0.03		0.11	ND	U	g	0.57	ND	U	g	0.57	ND	U	g
Phenanthrene	0.03		0.1	ND	U	g	0.6	ND	U	g	0.6	0.6	J	
Anthracene	0.04		0.1	ND	U	g	0.8	ND	U	g	0.8	ND	U	g
di-n-butyl Phthalate	0.06		0.2	ND	U	g	1.1	ND	U	g	1.1	ND	U	g
Fluroanthene	0.03		0.1	ND	U	g	0.6	ND	U	g	0.6	0.6	J	
Pyrene	0.03		0.1	ND	U	g	0.5	ND	U	g	0.5	0.9		g
Butylbenzylphthalate	0.02		0.1	ND	U	g	0.4	ND	U	g	0.4	ND	U	g
3,3'-Dichlorobenzidine	0.06		0.2	ND	U	g	1.0	ND	U	g	1.0	ND	U	g
Benzo(a)anthracene	0.04		0.1	ND	U	g	0.7	ND	U	g	0.7	ND	U	g
bis(2-Ethylhexyl) Phthalate	0.04		0.1	0.1	J		0.7	ND	U	g	0.7	2.4		g
Chrysene	0.05		0.2	ND	U	g	0.8	ND	U	g	0.8	ND	U	g
di-n-Octylphthalate	0.02		0.1	ND	U	g	0.4	ND	U	g	2.4	ND	U	g
Benzo(b)fluoranthene	0.04		0.1	ND	U	g	0.8	ND	U	g	0.7	ND	U	g
Benzo(k)fluoranthene	0.07		0.3	ND	U	g	1.3	ND	U	g	1.3	ND	U	g
Benzo(a)pyrene	0.04		0.1	ND	U	g	0.7	ND	U	g	0.7	ND	U	g
Indeno(1,2,3-c,d)pyrene	0.03		0.1	ND	U	g	0.5	ND	U	g	0.5	ND	U	g
Dibenzo(a,h)anthracene	0.02		0.1	ND	U	g	0.4	ND	U	g	0.4	ND	U	g
Benzo(g,h,i)perylene	0.03		0.1	ND	U	g	0.6	ND	U	g	0.6	ND	U	g

Base: Kotzebue LRRS
Site: AOC6
Extraction Method: EPA Method 3550
Analytical Method: EPA Method 8270
Matrix: Soil
Units: mg/kg

Table 13.2.1.6
Analytical Data Summary
EPA Method 8270

			Environmental Samples							
		Field ID:		AOC6-SB4-3.0				AOC6-SB5-1.5		
		Batch ID:		H590				H590		
Parameters	MDL		PQL	Result	Validity	Comments	PQL	Result	Validity	Comments
				Dilution 5				Dilution 5		
Phenol	0.05		0.9	ND	U	g	14	ND	U	g
bis(2-Chloroethyl) Ether	0.04		0.7	ND	U	g	10	ND	U	g
2-Chlorophenol	0.07		1.2	ND	U	g	19	ND	U	g
1,3-Dichlorobenzene	0.04		0.7	ND	U	k	10	ND	U	k
1,4-Dichlorobenzene	0.03		0.4	ND	U	g	6.7	ND	U	g
Benzyl Alcohol	0.05		0.9	ND	U	g	14	ND	U	g
1,2-Dichlorobenzene	0.04		0.7	ND	U	g	10	ND	U	g
2-Methylphenol	0.10		1.7	ND	U	g	26	ND	U	g
2,2'-Oxybis (1-Chloropropane)	0.03		0.6	ND	U	g	8.7	ND	U	g
4-Methylphenol	0.08		1.3	ND	U	g	20	ND	U	g
N-Nitrosodi-n-propylamine	0.03		0.5	ND	U	g	7.1	ND	U	g
Hexachloroethane	0.04		0.7	ND	U	g	10	ND	U	g
Nitrobenzene	0.02		0.4	ND	U	g	28	ND	U	g
Isophorone	0.03		0.6	ND	U	g	120	ND	U	g
2-Nitrophenol	0.03		0.6	ND	U	g	20	ND	U	g
2,4-Dimethylphenol	0.17		1.6	ND	U	g	320	ND	U	g
Benzoic Acid	0.06		0.98	ND	U	g	15	ND	U	g
bis(2-Chloroethoxy) Methane	0.04		0.6	ND	U	g	9.5	ND	U	g
2,4-Dichlorophenol	0.04		0.8	ND	U	g	12	ND	U	g
1,2,4-Trichlorobenzene	0.03		0.6	ND	U	g	8.9	ND	U	g
Naphthalene	0.04		0.6	ND	U	g	17	ND	U	g
4-Chloroaniline	0.10		1.8	ND	U	g	41	ND	U	g
Hexachlorobutadiene	0.03		0.6	ND	U	g	9.0	ND	U	g
4-Chloro-3-Methylphenol	0.06		1.0	ND	U	g	16	ND	U	g
2-Methylnaphthalene	0.03		0.6	ND	U	g	9.0	ND	U	g
Hexachlorocyclopentadiene	0.03		0.4	ND	U	g	6.8	ND	U	g
2,4,6-Trichlorophenol	0.04		0.7	ND	U	g	11	ND	U	g
2,4,5-Trichlorophenol	0.03		0.43	ND	U	g	6.7	ND	U	g
2-Chloronaphthalene	0.03		0.6	ND	U	g	8.9	ND	U	g
2-Nitroaniline	0.02		0.33	ND	U	g	13	ND	U	g
Dimethyl Phthalate	0.04		0.6	ND	U	g	9.5	ND	U	g
Acenaphthylene	0.04		0.7	ND	U	g	11	ND	U	g
3-Nitroaniline	0.11		1.9	ND	U	g	30	ND	U	g
Acenaphthene	0.03		0.5	ND	U	g	8.1	ND	U	g
2,4-Dinitrophenol	0.09		1.5	ND	U	g	24	ND	U	g
4-Nitrophenol	0.07		1.1	ND	U	g	18	ND	U	g
Dibenzofuran	0.03		0.5	ND	U	g	8.3	ND	U	g
2,6-Dinitrotoluene	0.04		0.7	ND	U	g	11	ND	U	g

Base: Kotzebue LRRS				Table 13.2.1.6									
Site: AOC6				Analytical Data Summary									
Extraction Method: EPA Method 3550				EPA Method 8270									
Analytical Method: EPA Method 8270													
Matrix: Soil													
Units: mg/kg													
			Environmental Samples										
		Field ID:		AOC6-SB4-3.0				AOC6-SB5-1.5					
		Batch ID:		H590				H590					
Parameters	MDL		PQL	Result	Validity	Comments	PQL	Result	Validity	Comments			
				Dilution 5				Dilution 5					
2,4-Dinitrotoluene	0.02		0.4	ND	U	g	15	ND	U	g			
Diethyl Phthalate	0.04		0.6	ND	U	g	9.4	ND	U	g			
4-Chlorophenyl Phenyl Ether	0.02		0.4	ND	U	g	5.8	ND	U	g			
Fluorene	0.03		0.5	ND	U	g	8.0	12		g			
4-Nitroaniline	0.13		2.3	ND	U	g	35	ND	U	g			
4,6-Dinitro-2-Methylphenol	0.09		1.5	ND	U	g	24	ND	U	g			
N-Nitrosodiphenylamine	0.08		1.5	ND	U	g	23	ND	U	g			
4-Bromophenyl Phenyl Ether	0.02		0.4	ND	U	g	5.9	ND	U	g			
Hexachlorobenzene	0.03		0.6	ND	U	g	8.7	ND	U	g			
Pentachlorophenol	0.03		0.57	ND	U	g	8.8	ND	U	g			
Phenanthrene	0.03		0.6	ND	U	g	8.8	ND	U	g			
Anthracene	0.04		0.8	ND	U	g	12	ND	U	g			
di-n-butyl Phthalate	0.06		1.1	ND	U	g	17	ND	U	g			
Fluroanthene	0.03		0.6	ND	U	g	9.0	ND	U	g			
Pyrene	0.03		0.5	ND	U	g	7.7	ND	U	g			
Butylbenzylphthalate	0.02		0.4	ND	U	g	5.9	ND	U	g			
3,3'-Dichlorobenzidine	0.06		1.0	ND	U	g	15	ND	U	g			
Benzo(a)anthracene	0.04		0.7	ND	U	g	10	ND	U	g			
bis(2-Ethylhexyl) Phthalate	0.04		0.7	2.1		g	11	ND	U	g			
Chrysene	0.05		0.8	ND	U	g	12	ND	U	g			
di-n-Octylphthalate	0.02		0.4	ND	U	g	6.1	ND	U	g			
Benzo(b)fluoranthene	0.04		0.7	ND	U	g	12	ND	U	g			
Benzo(k)fluoranthene	0.07		1.3	ND	U	g	20	ND	U	g			
Benzo(a)pyrene	0.04		0.7	ND	U	g	11	ND	U	g			
Indeno(1,2,3-c,d)pyrene	0.03		0.5	ND	U	g	7.2	ND	U	g			
Dibenzo(a,h)anthracene	0.02		0.4	ND	U	g	5.9	ND	U	g			
Benzo(g,h,i)perylene	0.03		0.6	ND	U	g	8.5	ND	U	g			

Base: Kotzebue LRRS						Table 13.2.1.6							
Site: AOC6						Analytical Data Summary							
Extraction Method: EPA Method 3550						EPA Method 8270							
Analytical Method: EPA Method 8270													
Matrix: Soil													
Units: mg/kg													
			Environmental Samples										
		Field ID:		AOC6-SD1									
		Batch ID:		H819									
Parameters	MDL		PQL	Result	Validity	Comments							
				Dilution 4									
Phenol	0.05		0.8	ND	U	g							
bis(2-Chloroethyl) Ether	0.04		0.5	ND	U	g							
2-Chlorophenol	0.07		1.0	ND	U	g							
1,3-Dichlorobenzene	0.04		0.5	ND	U	g							
1,4-Dichlorobenzene	0.03		0.4	ND	U	g							
Benzyl Alcohol	0.05		0.7	ND	U	g							
1,2-Dichlorobenzene	0.04		0.5	ND	U	g							
2-Methylphenol	0.10		1.4	ND	U	g							
2,2'-Oxybis (1-Chloropropane)	0.03		0.5	ND	U	g							
4-Methylphenol	0.08		1.1	ND	U	g							
N-Nitrosodi-n-propylamine	0.03		0.4	ND	U	g							
Hexachloroethane	0.04		0.6	ND	U	g							
Nitrobenzene	0.02		0.5	ND	U	g							
Isophorone	0.03		0.5	ND	U	g							
2-Nitrophenol	0.03		0.8	ND	U	g							
2,4-Dimethylphenol	0.17		1.3	ND	U	g							
Benzoic Acid	0.06		0.80	ND	U	g							
bis(2-Chloroethoxy) Methane	0.04		0.5	ND	U	g							
2,4-Dichlorophenol	0.04		0.6	ND	U	g							
1,2,4-Trichlorobenzene	0.03		0.5	ND	U	g							
Naphthalene	0.04		0.5	ND	U	g							
4-Chloroaniline	0.10		1.4	ND	U	g							
Hexachlorobutadiene	0.03		0.5	ND	U	g							
4-Chloro-3-Methylphenol	0.06		0.8	ND	U	g							
2-Methylnaphthalene	0.03		0.5	ND	U	g							
Hexachlorocyclopentadiene	0.03		0.4	ND	U	g							
2,4,6-Trichlorophenol	0.04		0.6	ND	U	g							
2,4,5-Trichlorophenol	0.03		0.35	ND	U	g							
2-Chloronaphthalene	0.03		0.5	ND	U	g							
2-Nitroaniline	0.02		0.27	ND	U	g							
Dimethyl Phthalate	0.04		0.5	ND	U	g							
Acenaphthylene	0.04		0.6	ND	U	g							
3-Nitroaniline	0.11		1.6	ND	U	g							
Acenaphthene	0.03		0.4	ND	U	g							
2,4-Dinitrophenol	0.09		1.3	ND	U	g							
4-Nitrophenol	0.07		1.5	ND	U	g							
Dibenzofuran	0.03		0.4	ND	U	g							
2,6-Dinitrotoluene	0.04		0.6	ND	U	g							

Base: Kotzebue LRRS						Table 13.2.1.6								
Site: AOC6						Analytical Data Summary								
Extraction Method: EPA Method 3550						EPA Method 8270								
Analytical Method: EPA Method 8270														
Matrix: Soil														
Units: mg/kg														
			Environmental Samples											
		Field ID:		AOC6-SD1										
		Batch ID:		H819										
Parameters	MDL		PQL	Result	Validity	Comments								
				Dilution 4										
2,4-Dinitrotoluene	0.02		0.3	ND	U	g								
Diethyl Phthalate	0.04		0.5	ND	U	g								
4-Chlorophenyl Phenyl Ether	0.02		0.3	ND	U	g								
Fluorene	0.03		0.4	ND	U	g								
4-Nitroaniline	0.13		1.9	ND	U	g								
4,6-Dinitro-2-Methylphenol	0.09		1.3	ND	U	g								
N-Nitrosodiphenylamine	0.08		1.2	ND	U	g								
4-Bromophenyl Phenyl Ether	0.02		0.3	ND	U	g								
Hexachlorobenzene	0.03		0.5	ND	U	g								
Pentachlorophenol	0.03		0.46	ND	U	g								
Phenanthrene	0.03		0.5	ND	U	g								
Anthracene	0.04		0.6	ND	U	g								
di-n-butyl Phthalate	0.06		0.9	ND	U	g								
Fluroanthene	0.03		0.5	ND	U	g								
Pyrene	0.03		0.4	ND	U	g								
Butylbenzylphthalate	0.02		0.3	ND	U	g								
3,3'-Dichlorobenzidine	0.06		0.8	ND	U	g								
Benzo(a)anthracene	0.04		0.5	ND	U	g								
bis(2-Ethylhexyl) Phthalate	0.04		0.6	ND	U	g								
Chrysene	0.05		0.6	ND	U	g								
di-n-Octylphthalate	0.02		0.3	ND	U	g								
Benzo(b)fluoranthene	0.04		0.6	ND	U	g								
Benzo(k)fluoranthene	0.07		1.1	ND	U	g								
Benzo(a)pyrene	0.04		0.6	ND	U	g								
Indeno(1,2,3-c,d)pyrene	0.03		0.4	ND	U	g								
Dibenzo(a,h)anthracene	0.02		0.3	ND	U	g								
Benzo(g,h,i)perylene	0.03		0.5	ND	U	g								

Base: Kotzebue LRRS						Table 2.1.7							
Site: AOC6						Analytical Data Summary							
Extraction Method: Not Applicable						EPA Method 9060							
Analytical Method: EPA Method 9060													
Matrix: Soil													
Units: mg/kg													
			Environmental Samples										
		Field ID:	A0C-06-GT3-T-1.0				A0C-06GT4-F-2.0						
		Batch ID:		H671				H671					
Parameters	MDL		PQL	Result	Validity	Comments	PQL	Result	Validity	Comments			
Total Organic Carbon	158		560	37300		g	560	17400		g			

Base: Kotzebue LRRS						Table 2.2.1										
Site: AOC6						Analytical Data Summary										
Extraction Method: EPA Method 3510						Method AK102										
Analytical Method: Method AK102																
Matrix: Water																
Units: mg/L																
			Environmental Samples													
		Field ID:		AOC6-SW1												
		Batch ID:		H819												
Parameters	MDL		PQL	Result	Validity	Comments										
Diesel Hydrocarbons	0.06		0.11	0.11		g										

Base: Kotzebue LRRS						Table 2.2.2		
Site: AOC6						Analytical Data Summary		
Extraction Method: EPA Method 3010 (unfiltered)/3005 (filtered)						EPA Method 6010		
Analytical Method: EPA Method 6010								
Matrix: Water								
Units: mg/L								
			Environmental Samples					
		Field ID:		AOC6-SW1				
		Batch ID:		H819				
Parameters	MDL		PQL	Result	Validity	Comments		
				Dilution 1.00				
Aluminum	0.01		0.03	0.01	J			
Antimony	0.03		0.1	ND	U	g		
Arsenic	0.03		0.1	ND	U	g		
Barium	0.004		0.01	0.18		g		
Beryllium	0.0002		0.001	ND	U	g		
Cadmium	0.006		0.02	ND	U	g		
Calcium	0.02		0.07	77		g		
Chromium, total	0.002		0.006	ND	U	g		
Cobalt	0.003		0.01	ND	U	g		
Copper	0.001		0.002	0.002	B J	a		
Iron	0.006		0.02	0.96		g		
Magnesium	0.01		0.04	10		g		
Manganese	0.003		0.01	0.27		g		
Molybdenum	0.002		0.007	ND	U	g		
Nickel	0.006		0.02	0.01	J			
Potassium	0.2		0.5	1.2		g		
Selenium	0.03		0.1	ND	U	g		
Silver	0.001		0.004	ND	U	g		
Sodium	0.07		0.2	6.2		g		
Thallium	0.01		0.04	ND	U	g		
Vanadium	0.01		0.004	ND	U	g		
Zinc	0.002		0.008	0.025		a		

Base: Kotzebue LRRS							Table 2.2.3									
Site: AOC6							Analytical Data Summary									
Extraction Method: See below							EPA Method 7000									
Analytical Method: See below																
Matrix: Water																
Units: mg/L																
				Environmental Samples												
			Field ID:		AOC6-SW1											
	EPA		Batch ID:		H819											
Parameters	Method	MDL		PQL	Result	Validity	Comments									
					Dilution 1.00											
Lead	3020/7421	0.001		0.004	0.002	J										
Mercury	7470	0.00002		0.00006	ND	U	g									

Base: Kotzebue LRRS							Table 2.2.4			
Site: AOC6							Analytical Data Summary			
Extraction Method: EPA Method 3510							EPA Method 8081			
Analytical Method: EPA Method 8081										
Matrix: Water										
Units: ug/L										
				Environmental Samples						
			Field ID:		AOC6-SW1		AOC6-SW1			
			Batch ID:		H819		H819			
	DB-5	DB-608		DB-5	DB-5	DB-608	DB-608			
Parameters	MDL	MDL		PQL	Result	PQL	Result	Validity	Comments	
alpha BHC	0.002	0.001		0.01	0.05	0.01	ND	R	c,h	
beta BHC	0.002	0.003		0.01	ND	0.01	ND	UJ	c	
delta BHC	0.002	0.002		0.01	ND	0.01	ND	UJ	c	
gamma BHC (Lindane)	0.002	0.002		0.01	ND	0.01	ND	UJ	c	
Heptachlor	0.004	0.004		0.01	ND	0.01	ND	UJ	c	
Aldrin	0.005	0.010		0.02	ND	0.03	ND	UJ	c	
Heptachlor Epoxide	0.003	0.002		0.01	0.01	0.01	ND	R	c,h	
Endosulfan I	0.004	0.004		0.01	ND	0.01	ND	UJ	c	
Dieldrin	0.004	0.005		0.02	ND	0.01	ND	UJ	c	
4,4'-DDE	0.009	0.010		0.029	ND	0.032	ND	UJ	c	
Endrin	0.004	0.004		0.014	ND	0.012	ND	UJ	c	
Endosulfan II	0.007	0.005		0.021	0.020	0.015	ND	R	c,h	
4,4'-DDD	0.005	0.004		0.017	ND	0.014	ND	UJ	c	
Endosulfan Sulfate	0.003	0.003		0.01	ND	0.01	ND	UJ	c	
4,4'-DDT	0.010	0.008		0.031	ND	0.026	ND	UJ	c	
Methoxychlor	0.038	0.035		0.12	ND	0.11	ND	UJ	c	
Endrin Aldehyde	0.010	0.010		0.031	ND	0.031	ND	UJ	c	
gamma-Chlordane	0.003	0.003		0.01	ND	0.01	ND	UJ	c	
alpha-Chlordane	0.003	0.004		0.01	ND	0.01	ND	UJ	c	
Toxaphene	0.25	0.15		0.79	ND	0.46	ND	UJ	c	
Arochlor 1016	0.3	0.3		0.9	ND	0.9	ND	UJ	c	
Arochlor 1242	0.2	0.3		0.7	ND	1.0	ND	UJ	c	
Arochlor 1248	0.3	0.2		0.8	ND	0.7	ND	UJ	c	
Arochlor 1254	0.2	0.3		1.0	ND	1.0	ND	UJ	c	
Arochlor 1260	0.3	0.3		1.0	ND	0.9	ND	UJ	c	
Arochlor 1221	0.2	0.2		0.8	ND	0.8	ND	UJ	c	
Arochlor 1232	0.3	0.3		0.8	ND	1.1	ND	UJ	c	

Base: Kotzebue LRRS				Table 2.2.5														
Site: AOC6				Analytical Data Summary														
Extraction Method: EPA Method 8260				EPA Method 8260														
Analytical Method: EPA Method 8260																		
Matrix: Water																		
Units: ug/L																		
			Environmental Samples															
		Field ID:		AOC6-SW1														
		Batch ID:		H819														
Parameters	MDL		PQL	Result	Validity	Comments												
Chloromethane	1.03		3	ND	UJ	c												
Bromomethane	0.42		2	ND	UJ	c												
Vinyl Chloride	0.52		2	ND	UJ	c												
Chloroethane	0.59		2	ND	UJ	c												
Methylene Chloride	0.41		1	3	B J	a,c,k												
Acetone	2.90		9	7	B J	c,k												
Carbon Disulfide	0.40		2	ND	UJ	c												
1,1-Dichloroethene	0.71		2	ND	UJ	c												
1,1-Dichloroethane	0.50		2	ND	UJ	c												
trans-1,2-Dichloroethene	0.42		1	ND	UJ	c												
cis-1,2-Dichloroethylene	0.43		2	ND	UJ	c												
Chloroform	0.26		1	ND	UJ	c												
1,2-Dichloroethane	0.69		2	ND	UJ	c												
Methyl Ethyl Ketone (2-butanone)	0.52		2	ND	UJ	c												
1,1,1-Trichloroethane	0.54		2	ND	UJ	c												
Carbon Tetrachloride	0.42		2	ND	UJ	c												
Vinyl Acetate	0.52		2	ND	UJ	c												
Bromodichloromethane	0.44		2	ND	UJ	c												
1,2-Dichloropropane	0.48		2	ND	UJ	c												
cis-1,3-Dichloropropene	0.38		1	ND	UJ	c												
Trichloroethylene (tce)	0.18		1	ND	UJ	c												
Dibromochloromethane	0.24		1	ND	UJ	c												
1,1,2-Trichloroethane	0.42		1	ND	UJ	c												
Benzene	0.42		2	ND	UJ	c												

Base: Kotzebue LRRS						Table 2.2.5									
Site: AOC6						Analytical Data Summary									
Extraction Method: EPA Method 8260						EPA Method 8260									
Analytical Method: EPA Method 8260															
Matrix: Water															
Units: ug/L															
			Environmental Samples												
		Field ID:		AOC6-SW1											
		Batch ID:		H819											
Parameters	MDL		PQL	Result	Validity	Comments									
trans-1,3-Dichloropropene	0.48		2	ND	UJ	c									
2-Chloroethyl Vinyl Ether	0.82		3	ND	UJ	c									
Bromoform	0.48		2	ND	UJ	c									
Methyl Isobutyl Ketone	0.52		4	ND	UJ	c									
2-Hexanone	0.72		2	ND	UJ	c									
Tetrachloroethylene (pce)	0.30		1	ND	UJ	c,k									
1,1,2,2-Tetrachloroethane	0.56		2	ND	UJ	c									
Toluene	0.46		2	ND	UJ	c									
Chlorobenzene	0.20		1	ND	UJ	c									
Ethylbenzene	0.28		1	ND	UJ	c									
Styrene	0.08		1	ND	UJ	c									
1,1,2-Trichloro-1,2,2-trifluoroethane	0.37		1	ND	UJ	c									
Xylenes, total	0.68		2	ND	UJ	c									
1,1,1,2-Tetrachloroethane	0.46		2	ND	UJ	c									
1,2,3-Trichloropropane	0.41		1	ND	UJ	c									
Bromochloromethane	0.24		1	ND	UJ	c									
1-Chlorohexane	1.68		5	ND	UJ	c									
Bromobenzene	0.43		2	ND	UJ	c									

Base: Kotzebue LRRS						Table 2.2.6		
Site: AOC6						Analytical Data Summary		
Extraction Method: EPA Method 3520						EPA Method 8270		
Analytical Method: EPA Method 8270								
Matrix: Water								
Units: ug/L								
			Environmental Samples					
		Field ID:		AOC6-SW1				
		Batch ID:		H819				
Parameters	MDL		PQL	Result	Validity	Comments		
Phenol	0.9		3	ND	UJ	c		
bis(2-Chloroethyl) Ether	1.9		6	ND	UJ	c		
2-Chlorophenol	0.2		1	ND	UJ	c		
1,3-Dichlorobenzene	0.3		1	ND	UJ	c		
1,4-Dichlorobenzene	0.3		1	ND	UJ	c		
Benzyl Alcohol	0.7		2	ND	UJ	c		
1,2-Dichlorobenzene	0.2		1	ND	UJ	c		
2-Methylphenol	0.2		1	ND	UJ	c		
2,2'-Oxybis (1-Chloropropane)	0.2		1	ND	UJ	c		
4-Methylphenol	0.6		2	ND	UJ	c		
N-Nitrosodi-n-propylamine	1.3		4	ND	UJ	c		
Hexachloroethane	0.6		2	ND	UJ	c		
Nitrobenzene	0.3		1	ND	UJ	c		
Isophorone	0.5		2	ND	UJ	c		
2-Nitrophenol	0.5		2	ND	UJ	c		
2,4-Dimethylphenol	2.6		8	ND	UJ	c		
Benzoic Acid	3.1		10	ND	UJ	c		
bis(2-Chloroethoxy) Methane	0.5		2	ND	UJ	c		
2,4-Dichlorophenol	1.0		3	ND	UJ	c		
1,2,4-Trichlorobenzene	0.2		1	ND	UJ	c		
Naphthalene	0.2		1	ND	UJ	c		
4-Chloroaniline	2.0		6	ND	UJ	c		
Hexachlorobutadiene	0.7		2	ND	UJ	c		
4-Chloro-3-Methylphenol	1.1		3	ND	UJ	c		
2-Methylnaphthalene	0.6		2	ND	UJ	c		
Hexachlorocyclopentadiene	2.9		9	ND	UJ	c		
2,4,6-Trichlorophenol	1.5		5	ND	UJ	c		
2,4,5-Trichlorophenol	1.3		4	ND	UJ	c		
2-Chloronaphthalene	0.5		2	ND	UJ	c		
2-Nitroaniline	1.3		4	ND	UJ	c		
Dimethyl Phthalate	0.7		2	ND	UJ	c		
Acenaphthylene	0.6		2	ND	UJ	c		
3-Nitroaniline	5.4		20	ND	UJ	c		
Acenaphthene	0.6		2	ND	UJ	c		
2,4-Dinitrophenol	8.4		30	ND	UJ	c		
4-Nitrophenol	1.6		5	ND	UJ	c		
Dibenzofuran	0.6		2	ND	UJ	c		
2,6-Dinitrotoluene	1.5		5	ND	UJ	c		

Base: Kotzebue LRRS						Table 2.2.6		
Site: AOC6						Analytical Data Summary		
Extraction Method: EPA Method 3520						EPA Method 8270		
Analytical Method: EPA Method 8270								
Matrix: Water								
Units: ug/L								
			Environmental Samples					
		Field ID:		AOC6-SW1				
		Batch ID:		H819				
Parameters	MDL		PQL	Result	Validity	Comments		
2,4-Dinitrotoluene	1.3		4	ND	UJ	c		
Diethyl Phthalate	1.0		3	ND	UJ	c		
4-Chlorophenyl Phenyl Ether	0.5		2	ND	UJ	c		
Fluorene	0.5		2	ND	UJ	c		
4-Nitroaniline	4.5		10	ND	UJ	c		
4,6-Dinitro-2-Methylphenol	2.7		9	ND	UJ	c		
N-Nitrosodiphenylamine	0.6		2	ND	UJ	c		
4-Bromophenyl Phenyl Ether	0.6		2	ND	UJ	c		
Hexachlorobenzene	0.6		2	ND	UJ	c		
Pentachlorophenol	3.7		10	ND	UJ	c		
Phenanthrene	0.6		2	ND	UJ	c		
Anthracene	0.7		2	ND	UJ	c		
di-n-butyl Phthalate	1.0		3	ND	UJ	c		
Fluroanthene	0.6		2	ND	UJ	c		
Pyrene	0.6		2	ND	UJ	c		
Butylbenzylphthalate	0.7		2	ND	UJ	c		
3,3'-Dichlorobenzidine	2.1		7	ND	UJ	c		
Benzo(a)anthracene	0.6		2	ND	UJ	c		
bis(2-Ethylhexyl) Phthalate	0.6		2	1	J	c		
Chrysene	0.6		2	ND	UJ	c		
di-n-Octylphthalate	0.6		2	ND	UJ	c		
Benzo(b)fluoranthene	0.6		2	ND	UJ	c		
Benzo(k)fluoranthene	0.8		3	ND	UJ	c		
Benzo(a)pyrene	0.7		2	ND	UJ	c		
Indeno(1,2,3-c,d)pyrene	0.5		2	ND	UJ	c		
Dibenzo(a,h)anthracene	0.6		2	ND	UJ	c		
Benzo(g,h,i)perylene	0.5		2	ND	UJ	c		

ANALYTICAL DATA SUMMARY
SITE SS18-TRUCK FILL STAND (AOC11)

Base: Kotzebue LRRS							Table 2.1							
Site: AOC11							Analytical Data Summary							
Extraction Method: Method AK101							Method AK101							
Analytical Method: Method AK101														
Matrix: Soil														
Units: mg/kg														
			Environmental Samples											
		Field ID:		AOC11-SB1-1.0				AOC11-SB3-1.0				AOC11-SB4-1.5		
		Batch ID:		H819				H819				H819		
Parameters	MDL		PQL	Result	Validity	Comments	PQL	Result	Validity	Comments	PQL	Result	Validity	Comments
Gasoline Hydrocarbons	1.7		6.0	1500	J	a,b	6.3	920	J	a,b	9.9	4.4	B J	a

Base: Kotzebue LRRS						Table 2.1								
Site: AOC11						Analytical Data Summary								
Extraction Method: Method AK101						Method AK101								
Analytical Method: Method AK101														
Matrix: Soil														
Units: mg/kg														
			Environmental Samples											
		Field ID:	AOC11-SB4-1.5RE					AOC11-SB6-1.0				AOC11-SB6-1.0RE		
		Batch ID:	H819					H819				H819		
Parameters	MDL		PQL	Result	Validity	Comments	PQL	Result	Validity	Comments	PQL	Result	Validity	Comments
Gasoline Hydrocarbons	1.7		9.9	ND	U	g	15	12	J	a,b	15	5.2	J	b,d

Base: Kotzebue LRRS						Table 2.1								
Site: AOC11						Analytical Data Summary								
Extraction Method: Method AK101						Method AK101								
Analytical Method: Method AK101														
Matrix: Soil														
Units: mg/kg														
			Environmental Samples											
		Field ID:		AOC11-SS1				AOC11-SS2				AOC11-SB2-1.5		
		Batch ID:		H819				H819				H819		
Parameters	MDL		PQL	Result	Validity	Comments	PQL	Result	Validity	Comments	PQL	Result	Validity	Comments
Gasoline Hydrocarbons	1.7		8.0	980	J	a,b	17	2100	J	a,b	12	2800	J	b

Base: Kotzebue LRRS						Table 2.1							
Site: AOC11						Analytical Data Summary							
Extraction Method: Method AK101						Method AK101							
Analytical Method: Method AK101													
Matrix: Soil													
Units: mg/kg													
			Environmental Samples										
		Field ID:		AOC11-SB5-2.0									
		Batch ID:		H819									
Parameters	MDL		PQL	Result	Validity	Comments							
Gasoline Hydrocarbons	1.7		7.7	ND	U	g							

Base: Kotzebue LRRS						Table 2.2								
Site: AOC11						Analytical Data Summary								
Extraction Method: EPA Method 3550						Method AK102								
Analytical Method: Method AK102														
Matrix: Soil														
Units: mg/kg														
			Environmental Samples											
		Field ID:		AOC11-SB1-1.0				AOC11-SB1-1.0DL				AOC11-SB2-1.5		
		Batch ID:		H819				H819				H819		
Parameters	MDL		PQL	Result	Validity	Comments	PQL	Result	Validity	Comments	PQL	Result	Validity	Comments
								Dilution 10						
Diesel Hydrocarbons	0.9		6.9	5200 E*		g	69	5500		g	7.6	6300		g
* Analyte detected above linear calibration range.														

Base: Kotzebue LRRS						Table 2.2								
Site: AOC11						Analytical Data Summary								
Extraction Method: EPA Method 3550						Method AK102								
Analytical Method: Method AK102														
Matrix: Soil														
Units: mg/kg														
			Environmental Samples											
		Field ID:	AOC11-SB2-1.5DL					AOC11-SB3-1.0				AOC11-SB3-1.0DL		
		Batch ID:		H819				H819				H819		
Parameters	MDL		PQL	Result	Validity	Comments	PQL	Result	Validity	Comments	PQL	Result	Validity	Comments
				Dilution 10								Dilution 100		
Diesel Hydrocarbons	0.9		76	6500		g	7.6	S*	NA	NA	760	9900		g
* No value reported due to saturation of the detector.														

Base: Kotzebue LRRS						Table 2.2								
Site: AOC11						Analytical Data Summary								
Extraction Method: EPA Method 3550						Method AK102								
Analytical Method: Method AK102														
Matrix: Soil														
Units: mg/kg														
			Environmental Samples											
		Field ID:		AOC11-SB4-1.5				AOC11-SB5-2.0				AOC11-SB6-1.0		
		Batch ID:		H819				H819				H819		
Parameters	MDL		PQL	Result	Validity	Comments	PQL	Result	Validity	Comments	PQL	Result	Validity	Comments
Diesel Hydrocarbons	0.9		3.5	16		g	9.0	ND	U	g	17	1100		g

Base: Kotzebue LRRS						Table 2.2								
Site: AOC11						Analytical Data Summary								
Extraction Method: EPA Method 3550						Method AK102								
Analytical Method: Method AK102														
Matrix: Soil														
Units: mg/kg														
			Environmental Samples											
		Field ID:		AOC11-SS1				AOC11-SS1DL				AOC11-SS2		
		Batch ID:		H819				H819				H819		
Parameters	MDL		PQL	Result	Validity	Comments	PQL	Result	Validity	Comments	PQL	Result	Validity	Comments
								Dilution 100						
Diesel Hydrocarbons	0.9		12	S*	NA	NA	1200	16000		g	24	S*	NA	NA
* No value reported due to the saturation of the detector.														

Base: Kotzebue LRRS						Table 2.2							
Site: AOC11						Analytical Data Summary							
Extraction Method: EPA Method 3550						Method AK102							
Analytical Method: Method AK102													
Matrix: Soil													
Units: mg/kg													
			Environmental Samples										
		Field ID:		AOC11-SS2DL									
		Batch ID:		H819									
Parameters	MDL		PQL	Result	Validity	Comments							
				Dilution 100									
Diesel Hydrocarbons	0.9		2300	67000		g							

Base: Kotzebue LRRS						Table 2.5								
Site: AOC11						Analytical Data Summary								
Extraction Method: EPA Method 8260						EPA Method 8260								
Analytical Method: EPA Method 8260														
Matrix: Soil														
Units: mg/kg														
			Environmental Samples											
		Field ID:		AOC11-SB1-1.0				AOC11-SB2-1.5				AOC11-SB3-1.0		
		Batch ID:		H819				H819				H819		
Parameters	MDL		PQL	Result	Validity	Comments	PQL	Result	Validity	Comments	PQL	Result	Validity	Comments
Chloromethane	0.0009		0.36	ND	U	g	0.37	ND	U	g	0.38	ND	U	g
Bromomethane	0.0008		0.34	ND	U	g	0.35	ND	U	g	0.35	ND	U	g
Vinyl Chloride	0.0010		0.39	ND	U	g	0.40	ND	U	g	0.41	ND	U	g
Chloroethane	0.0010		0.42	ND	U	g	0.43	ND	U	g	0.43	ND	U	g
Methylene Chloride	0.0009		0.35	0.28	B J	a,k	0.36	0.30	B J	a,k	0.37	0.28	B J	a,k
Acetone	0.0039		1.6	0.90	B J	a,k	1.7	0.59	B J	a,k	1.7	0.81	B J	a,k
Carbon Disulfide	0.0005		0.22	ND	U	g	0.23	ND	U	g	0.23	ND	U	g
1,1-Dichloroethene	0.0012		0.48	ND	U	g	0.49	ND	U	g	0.50	ND	U	g
1,1-Dichloroethane	0.0004		0.15	ND	U	g	0.15	ND	U	g	0.15	ND	U	g
trans-1,2-Dichloroethene	0.0009		0.36	ND	U	g	0.37	ND	U	g	0.38	ND	U	g
cis-1,2-Dichloroethylene	0.0011		0.47	ND	U	g	0.48	ND	U	g	0.49	ND	U	g
Chloroform	0.0005		0.19	ND	U	g	0.19	ND	U	g	0.20	ND	U	g
1,2-Dichloroethane	0.0005		0.21	ND	U	g	0.21	ND	U	g	0.21	ND	U	g
Methyl Ethyl Ketone (2-butanone)	0.0025		1.0	ND	U	g	1.0	ND	U	g	1.1	ND	U	g
1,1,1-Trichloroethane	0.0004		0.18	ND	U	g	0.18	ND	U	g	0.18	ND	U	g
Carbon Tetrachloride	0.0010		0.40	ND	U	g	0.41	ND	U	g	0.42	ND	U	g
Vinyl Acetate	0.0016		0.66	ND	U	g	0.68	ND	U	g	0.69	ND	U	g
Bromodichloromethane	0.0006		0.27	ND	U	g	0.27	ND	U	g	0.28	ND	U	g
1,2-Dichloropropane	0.0008		0.35	ND	U	g	0.35	ND	U	g	0.36	ND	U	g
cis-1,3-Dichloropropene	0.0007		0.28	ND	U	g	0.29	ND	U	g	0.30	ND	U	g
Trichloroethylene (tce)	0.0005		0.22	ND	U	g	0.23	ND	U	g	0.23	ND	U	g
Dibromochloromethane	0.0003		0.14	ND	U	g	0.14	ND	U	g	0.15	ND	U	g
1,1,2-Trichloroethane	0.0007		0.28	ND	U	g	0.29	ND	U	g	0.30	ND	U	g
Benzene	0.0005		0.19	ND	U	g	0.20	ND	U	g	0.20	ND	U	g

Base: Kotzebue LRRS							Table 2.6							
Site: AOC11							Analytical Data Summary							
Extraction Method: EPA Method 8260							EPA Method 8260							
Analytical Method: EPA Method 8260														
Matrix: Soil														
Units: mg/kg														
			Environmental Samples											
		Field ID:		AOC11-SB1-1.0				AOC11-SB2-1.5				AOC11-SB3-1.0		
		Batch ID:		H819				H819				H819		
Parameters	MDL		PQL	Result	Validity	Comments	PQL	Result	Validity	Comments	PQL	Result	Validity	Comments
trans-1,3-Dichloropropene	0.0005		0.22	ND	U	g	0.22	ND	U	g	0.23	ND	U	g
2-Chloroethyl Vinyl Ether	0.0006		0.26	ND	U	g	0.27	ND	U	g	0.27	ND	U	g
Bromoform	0.0013		0.52	ND	U	g	0.53	ND	U	g	0.54	ND	U	g
Methyl Isobutyl Ketone	0.20		0.62	ND	U	g	0.63	ND	U	g	0.64	ND	U	g
2-Hexanone	0.0027		1.1	ND	U	g	1.2	ND	U	g	1.2	ND	U	g
Tetrachloroethylene (pce)	0.0009		0.37	ND	U	g	0.38	ND	U	g	0.39	ND	U	g
1,1,2,2-Tetrachloroethane	0.0009		0.37	ND	U	g	0.38	ND	U	g	0.39	ND	U	g
Toluene	0.0009		0.37	ND	U	g	0.38	ND	U	g	0.39	ND	U	g
Chlorobenzene	0.0007		0.30	ND	U	g	0.30	ND	U	g	0.31	ND	U	g
Ethylbenzene	0.0004		0.18	ND	U	g	0.18	ND	U	g	0.18	ND	U	g
Styrene	0.0006		0.26	ND	U	g	0.27	ND	U	g	0.27	ND	U	g
1,1,2-Trichloro-1,2,2-trifluoroethane	0.007		0.30	ND	U	g	0.31	ND	U	g	0.32	ND	U	g
Xylenes, total	0.0020		0.83	ND	U	g	0.85	ND	U	g	0.86	ND	U	g
1,1,1,2-Tetrachloroethane	0.0010		0.41	ND	U	g	0.42	ND	U	g	0.43	ND	U	g
1,2,3-Trichloropropane	0.0023		0.93	ND	U	g	0.95	ND	U	g	0.97	ND	U	g
Bromochloromethane	0.0007		0.28	ND	U	g	0.28	ND	U	g	0.29	ND	U	g
1-Chlorohexane	0.0007		0.27	ND	U	g	0.28	ND	U	g	0.28	ND	U	g
4 Methyl 2 Pentanone	0.0015		0.62	ND	U	g	0.63	ND	U	g	0.64	ND	U	g
Bromobenzene	0.002		0.30	ND	U	g	0.31	ND	U	g	0.31	ND	U	g

Base: Kotzebue LRRS						Table 2.6								
Site: AOC11						Analytical Data Summary								
Extraction Method: EPA Method 3550						EPA Method 8270								
Analytical Method: EPA Method 8270														
Matrix: Soil														
Units: mg/kg														
			Environmental Samples											
		Field ID:		AOC11-SB1-1.0				AOC11-SB2-1.5				AOC11-SB3-1.0		
		Batch ID:		H819				H819				H819		
Parameters	MDL		PQL	Result	Validity	Comments	PQL	Result	Validity	Comments	PQL	Result	Validity	Comments
												Dilution 4		
Phenol	0.05		1.8	ND	U	g	1.8	ND	U	g	7.6	ND	U	g
bis(2-Chloroethyl) Ether	0.04		1.3	ND	U	g	1.3	ND	U	g	5.5	ND	U	g
2-Chlorophenol	0.07		2.4	ND	U	g	2.4	ND	U	g	10	ND	U	g
1,3-Dichlorobenzene	0.04		1.3	ND	U	g	1.3	ND	U	g	5.3	ND	U	g
1,4-Dichlorobenzene	0.03		0.9	ND	U	g	0.8	ND	U	g	3.5	ND	U	g
Benzyl Alcohol	0.05		1.8	ND	U	g	1.7	ND	U	g	7.2	ND	U	g
1,2-Dichlorobenzene	0.04		1.3	ND	U	g	1.3	ND	U	g	5.3	ND	U	g
2-Methylphenol	0.10		3.4	ND	U	g	3.3	ND	U	g	14	ND	U	g
2,2'-Oxybis (1-Chloropropane)	0.03		1.1	ND	U	g	1.1	ND	U	g	4.6	ND	U	g
4-Methylphenol	0.08		2.6	ND	U	g	2.6	ND	U	g	11	ND	U	g
N-Nitrosodi-n-propylamine	0.03		0.9	ND	U	g	0.9	ND	U	g	3.7	ND	U	g
Hexachloroethane	0.04		1.3	ND	U	g	1.3	ND	U	g	5.5	ND	U	g
Nitrobenzene	0.02		0.8	ND	U	g	0.8	ND	U	g	3.5	ND	U	g
Isophorone	0.03		1.1	ND	U	g	1.1	ND	U	g	4.6	ND	U	g
2-Nitrophenol	0.03		1.2	1.5		g	1.1	2.1		g	4.8	ND	U	g
2,4-Dimethylphenol	0.17		3.2	ND	U	g	3.1	ND	U	g	13	ND	U	g
Benzoic Acid	0.06		1.9	ND	U	g	1.9	ND	U	g	7.9	ND	U	g
bis(2-Chloroethoxy) Methane	0.04		1.2	ND	U	g	1.2	ND	U	g	5.0	ND	U	g
2,4-Dichlorophenol	0.04		1.5	ND	U	g	1.5	ND	U	g	6.2	ND	U	g
1,2,4-Trichlorobenzene	0.03		1.1	ND	U	g	1.1	ND	U	g	4.7	ND	U	g
Naphthalene	0.04		1.2	ND	U	g	1.2	ND	U	g	4.9	ND	U	g
4-Chloroaniline	0.10		3.5	ND	U	g	3.4	ND	U	g	14	ND	U	g
Hexachlorobutadiene	0.03		1.2	ND	U	g	1.1	ND	U	g	4.7	ND	U	g
4-Chloro-3-Methylphenol	0.06		2.0	ND	U	g	2.0	ND	U	g	8.2	ND	U	g
2-Methylnaphthalene	0.03		1.2	ND	U	g	1.1	ND	U	g	4.7	ND	U	g
Hexachlorocyclopentadiene	0.03		0.9	ND	U	g	0.8	ND	U	g	3.6	ND	U	g
2,4,6-Trichlorophenol	0.04		1.5	ND	U	g	1.4	ND	U	g	6.0	ND	U	g
2,4,5-Trichlorophenol	0.03		0.86	ND	U	g	0.84	ND	U	g	3.5	ND	U	g
2-Chloronaphthalene	0.03		1.1	ND	U	g	1.1	ND	U	g	4.7	ND	U	g
2-Nitroaniline	0.02		0.65	ND	U	g	0.64	ND	U	g	2.7	ND	U	g
Dimethyl Phthalate	0.04		1.2	ND	U	g	1.2	ND	U	g	5.0	ND	U	g
Acenaphthylene	0.04		1.4	ND	U	g	1.4	ND	U	g	5.7	ND	U	g
3-Nitroaniline	0.11		3.8	ND	U	g	3.7	ND	U	g	16	ND	U	g
Acenaphthene	0.03		1.0	ND	U	g	1.0	ND	U	g	4.3	ND	U	g
2,4-Dinitrophenol	0.09		3.0	ND	U	g	3.0	ND	U	g	13	ND	U	g
4-Nitrophenol	0.02		2.3	ND	U	g	2.2	ND	U	g	9.3	ND	U	g
Dibenzofuran	0.03		1.1	ND	U	g	1.0	ND	U	g	4.3	ND	U	g
2,6-Dinitrotoluene	0.04		1.4	ND	U	g	1.4	ND	U	g	5.9	ND	U	g

Base: Kotzebue LRRS							Table 2.6							
Site: AOC11							Analytical Data Summary							
Extraction Method: EPA Method 3550							EPA Method 8270							
Analytical Method: EPA Method 8270														
Matrix: Soil														
Units: mg/kg														
			Environmental Samples											
		Field ID:		AOC11-SB1-1.0				AOC11-SB2-1.5				AOC11-SB3-1.0		
		Batch ID:		H819				H819				H819		
Parameters	MDL		PQL	Result	Validity	Comments	PQL	Result	Validity	Comments	PQL	Result	Validity	Comments
												Dilution 4		
2,4-Dinitrotoluene	0.02		0.8	ND	U	g	0.7	ND	U	g	3.1	ND	U	g
Diethyl Phthalate	0.04		1.2	ND	U	g	1.2	ND	U	g	4.9	ND	U	g
4-Chlorophenyl Phenyl Ether	0.02		0.7	ND	U	g	0.7	ND	U	g	3.1	ND	U	g
Fluorene	0.03		1.0	ND	U	g	1.0	ND	U	g	4.2	ND	U	g
4-Nitroaniline	0.13		4.5	ND	U	g	4.4	ND	U	g	19	ND	U	g
4,6-Dinitro-2-Methylphenol	0.09		3.0	ND	U	g	3.0	ND	U	g	12	ND	U	g
N-Nitrosodiphenylamine	0.08		2.9	ND	U	g	2.8	ND	U	g	12	ND	U	g
4-Bromophenyl Phenyl Ether	0.02		0.7	ND	U	g	0.7	ND	U	g	3.1	ND	U	g
Hexachlorobenzene	0.03		1.1	ND	U	g	1.1	ND	U	g	4.6	ND	U	g
Pentachlorophenol	0.03		1.1	ND	U	g	1.1	ND	U	g	4.6	ND	U	g
Phenanthrene	0.03		1.1	ND	U	g	1.1	ND	U	g	4.6	ND	U	g
Anthracene	0.04		1.5	ND	U	g	1.5	ND	U	g	6.2	ND	U	g
di-n-butyl Phthalate	0.06		2.1	ND	U	g	2.1	ND	U	g	8.8	ND	U	g
Fluoranthene	0.03		1.2	ND	U	g	1.1	ND	U	g	4.7	ND	U	g
Pyrene	0.03		1.0	ND	U	g	1.0	ND	U	g	4.0	ND	U	g
Butylbenzylphthalate	0.02		0.8	ND	U	g	0.7	ND	U	g	3.1	ND	U	g
3,3'-Dichlorobenzidine	0.06		2.0	ND	U	g	1.9	ND	U	g	8.1	ND	U	g
Benzo(a)anthracene	0.04		1.3	ND	U	g	1.3	ND	U	g	5.5	ND	U	g
bis(2-Ethylhexyl) Phthalate	0.04		1.4	ND	U	g	1.3	ND	U	g	5.6	ND	U	g
Chrysene	0.05		1.5	ND	U	g	1.5	ND	U	g	6.3	ND	U	g
di-n-Octylphthalate	0.02		0.8	ND	U	g	0.8	ND	U	g	3.2	ND	U	g
Benzo(b)fluoranthene	0.04		1.5	ND	U	g	1.4	ND	U	g	6.1	ND	U	g
Benzo(k)fluoranthene	0.07		2.6	ND	U	g	2.5	ND	U	g	10	ND	U	g
Benzo(a)pyrene	0.04		1.4	ND	U	g	1.3	ND	U	g	5.6	ND	U	g
Indeno(1,2,3-c,d)pyrene	0.03		0.9	ND	U	g	0.9	ND	U	g	3.8	ND	U	g
Dibenzo(a,h)anthracene	0.02		0.8	ND	U	g	0.7	ND	U	g	3.1	ND	U	g
Benzo(g,h,i)perylene	0.03		1.1	ND	U	g	1.1	ND	U	g	4.5	ND	U	g

Base: Kotzebue LRRS						Table 2.3								
Site: AOC11						Analytical Data Summary								
Extraction Method: EPA Method 3050						EPA Method 6010								
Analytical Method: EPA Method 6010														
Matrix: Soil														
Units: mg/kg														
			Environmental Samples											
		Field ID:		AOC11-SB1-1.0				AOC11-SB2-1.5				AOC11-SB3-1.0		
		Batch ID:		H819				H819				H819		
Parameters	MDL		PQL	Result	Validity	Comments	PQL	Result	Validity	Comments	PQL	Result	Validity	Comments
				Dilution 2.00				Dilution 2.00				Dilution 1.00		
Aluminum	0.96		3	6500		a	3	7100		a	3	7100		a
Antimony	3.2		10	ND	UJ	c	10	ND	UJ	c	10	ND	UJ	c
Arsenic	2.8		10	7	J		10	6	J		10	6	J	
Barium	0.43		1	94		g	1	83		g	1	89		g
Beryllium	0.019		0.1	ND	U	a	0.1	0.1		a	0.1	0.1		a
Cadmium	0.56		2	ND	U	g	2	ND	U	g	2	ND	U	g
Calcium	2.1		7	58000	J	c	6	52000	J	c	7	48000		c
Chromium, total	0.19		0.6	16		g	0.6	14		g	0.6	14		g
Cobalt	0.28		1	7		g	1	7		g	1	7		g
Copper	0.077		0.2	9.8		a	0.2	11		a	0.3	12		a
Iron	0.58		2	14000	J	c	2	14000	J	c	2	14000	J	c
Magnesium	1.3		4	16000	J	c	4	15000	J	c	4	15000	J	c
Manganese	0.32		1	260	J	c	1	290	J	c	1	250	J	c
Molybdenum	0.21		0.7	ND	U	g	0.6	ND	U	g	0.7	ND	U	g
Nickel	0.57		2	37		g	2	32		g	2	25		g
Potassium	16		50	300		a	50	280		a	50	280		a
Selenium	3.2		10	10		g	10	7	J		10	5	J	
Silver	0.13		0.4	ND	U	a	0.4	ND	U	a	0.4	ND	U	a
Sodium	6.5		20	130		g	20	130		g	20	150		g
Thallium	1.3		4	8		g	4	9		g	4	12		g
Vanadium	0.12		0.4	25		g	0.4	25		g	0.4	28		g
Zinc	0.22		0.8	28		a	0.7	27		a	0.8	45		a

Base: Kotzebue LRRS						Table 2.4								
Site: AOC11						Analytical Data Summary								
Extraction Method: See below						EPA Method 7000								
Analytical Method: See below														
Matrix: Soil														
Units: mg/kg														
				Environmental Samples										
			Field ID:		AOC11-SB1-1.0				AOC11-SB2-1.5				AOC11-SB3-1.0		
	EPA		Batch ID:		H819				H819				H819		
Parameters	Method	MDL		PQL	Result	Validity	Comments	PQL	Result	Validity	Comments	PQL	Result	Validity	Comments
Lead	3050/7421	0.12		0.4	4.7*	J	c	0.4	3.8*	J	c	0.4	12**	J	c
Mercury	7471	0.0020		0.03	0.02	J		0.03	0.009	J		0.03	ND	U	g
* Sample diluted at a factor of 5.00															
** Sample diluted at a factor of 10.00															

ANALYTICAL DATA SUMMARY
SITE SS19-PCB SPILL SOUTH FENCE (AOC12)

Base: Kotzebue LRRS						Table 2.1							
Site: AOC12						Analytical Data Summary							
Extraction Method: EPA Method 3550						Method AK102							
Analytical Method: EPA Method AK102													
Matrix: Soil													
Units: mg/kg													
			Environmental Samples										
		Field ID:		AOC12-SS1				AOC12-SS1DL					
		Batch ID:		H859				H859					
Parameters	MDL		PQL	Result	Validity	Comments	PQL	Result	Validity	Comments			
								Dilution 100					
Diesel Hydrocarbons	0.9		7.0	S*	NA	NA	700	27000	J	b			
* No value reported due to saturation of the detector.													

Base: Kotzebue LRRS							Table 2.2							
Site: AOC12							Analytical Data Summary							
Extraction Method: EPA Method 3550							EPA Method 8081							
Analytical Method: EPA Method 8081														
Matrix: Soil														
Units: mg/kg														
				Environmental Samples										
			Field ID:		AOC12-SS1		AOC12-SS1							
			Batch ID:		H859		H859							
	DB-5	DB-608		DB-5	DB-5	DB-608	DB-608							
Parameters	MDL	MDL		PQL	Result	PQL	Result	Validity	Comments					
alpha BHC	0.0001	0.0001		0.0051	ND	0.0045	ND	UJ	e					
beta BHC	0.0001	0.0001		0.0077	0.088	0.0071	ND	U	e,h					
delta BHC	0.0001	0.0001		0.0079	0.062	0.0059	0.044	J	e,n					
gamma BHC (Lindane)	0.0001	0.0001		0.0062	ND	0.0052	ND	UJ	e					
Heptachlor	0.0001	0.0001		0.0071	ND	0.0070	ND	UJ	e					
Aldrin	0.0001	0.0001		0.0050	0.046	0.0064	0.021	J	d,n					
Heptachlor Epoxide	0.0001	0.0001		0.0062	0.017	0.0079	0.019	J	e,n					
Endosulfan I	0.0001	0.0001		0.0091	0.042	0.0091	ND	U	e,h					
Dieldrin	0.0001	0.0002		0.0097	0.056	0.012	ND	U	e,h					
4,4'-DDE	0.0001	0.0002		0.0080	ND	0.012	ND	UJ	e					
Endrin	0.0001	0.0001		0.0079	ND	0.0082	ND	UJ	e					
Endosulfan II	0.0002	0.0002		0.013	ND	0.013	ND	UJ	e					
4,4'-DDD	0.0001	0.0001		0.0097	0.072	0.011	ND	U	e,h,n					
Endosulfan Sulfate	0.0002	0.0002		0.020	ND	0.020	ND	UJ	e					
4,4'-DDT	0.0002	0.0001		0.018	0.12	0.011	0.069	J	e					
Methoxychlor	0.0008	0.0001		0.069	ND	0.087	ND	UJ	e					
Endrin Aldehyde	0.0002	0.0003		0.018	0.0083	0.021	ND	U	e,h					
gamma-Chlordane	0.0001	0.0001		0.0043	0.041	0.0064	ND	U	e,h					
alpha-Chlordane	0.0001	0.0001		0.0051	0.053	0.0091	ND	U	e,h					
Toxaphene	0.007	0.009		6.7	ND	6.7	ND	UJ	e					
Arochlor 1016	0.009	0.009		0.83	ND	0.83	ND	UJ	e					
Arochlor 1242	0.005	0.008		0.83	ND	0.83	ND	UJ	e					
Arochlor 1248	0.004	0.005		0.83	ND	0.83	ND	UJ	e					
Arochlor 1254	0.011	0.009		1.2	ND	1.2	ND	UJ	e					
Arochlor 1260	0.009	0.010		1.7	ND	1.7	ND	UJ	e					
Arochlor 1221	0.011	0.010		0.84	ND	0.76	ND	UJ	e					
Arochlor 1232	0.005	0.005		0.83	ND	0.83	ND	UJ	e					

Base: Kotzebue LRRS
Site: AOC12
Extraction Method: EPA Method 8260
Analytical Method: EPA Method 8260
Matrix: Soil
Units: mg/kg

Table 2.3
Analytical Data Summary
EPA Method 8260

			Environmental Samples							
		Field ID:		AOC12-SS1				AOC12-SS1*		
		Batch ID:		H859				H859		
Parameters	MDL		PQL	Result	Validity	Comments	PQL	Result	Validity	Comments
Chloromethane	0.0009		0.003	ND	UJ	n	0.003	ND	UJ	n
Bromomethane	0.0008		0.003	ND	UJ	n	0.003	ND	UJ	n
Vinyl Chloride	0.0010		0.003	ND	UJ	n	0.003	ND	UJ	n
Chloroethane	0.0010		0.003	ND	UJ	n	0.003	ND	UJ	n
Methylene Chloride	0.0009		0.003	0.009	B J	a	0.003	0.012	B J	n
Acetone	0.0039		0.01	0.01	B J	a	0.01	0.01	B J	n
Carbon Disulfide	0.0005		0.002	ND	UJ	n	0.002	ND	UJ	n
1,1-Dichloroethene	0.0012		0.004	ND	UJ	n	0.004	ND	UJ	n
1,1-Dichloroethane	0.0004		0.001	ND	UJ	n	0.001	ND	UJ	n
trans-1,2-Dichloroethene	0.0009		0.003	ND	UJ	n	0.003	ND	UJ	n
cis-1,2-Dichloroethylene	0.0011		0.004	ND	UJ	n	0.004	ND	UJ	n
Chloroform	0.0005		0.001	ND	UJ	n	0.001	ND	UJ	n
1,2-Dichloroethane	0.0005		0.002	ND	UJ	n	0.002	ND	UJ	n
Methyl Ethyl Ketone (2-butanone)	0.0025		0.008	ND	UJ	a	0.008	ND	J	a,n
1,1,1-Trichloroethane	0.0004		0.001	ND	UJ	n	0.001	ND	UJ	n
Carbon Tetrachloride	0.0010		0.003	ND	UJ	n	0.003	ND	UJ	n
Vinyl Acetate	0.0016		0.005	ND	UJ	n	0.005	ND	UJ	n
Bromodichloromethane	0.0006		0.002	ND	UJ	n	0.002	ND	UJ	n
1,2-Dichloropropane	0.0008		0.003	ND	UJ	n	0.003	ND	UJ	n
cis-1,3-Dichloropropene	0.0007		0.002	ND	UJ	n	0.002	ND	UJ	n
Trichloroethylene (tce)	0.0005		0.002	ND	UJ	n	0.002	ND	UJ	n
Dibromochloromethane	0.0003		0.001	ND	UJ	n	0.001	ND	UJ	n
1,1,2-Trichloroethane	0.0007		0.002	ND	UJ	n	0.002	ND	UJ	n
Benzene	0.0005		0.0015	ND	UJ	n	0.0015	ND	UJ	n

* Reanalyzed.

Base: Kotzebue LRRS						Table 2.3								
Site: AOC12						Analytical Data Summary								
Extraction Method: EPA Method 8260						EPA Method 8260								
Analytical Method: EPA Method 8260														
Matrix: Soil														
Units: mg/kg														
			Environmental Samples											
		Field ID:		AOC12-SS1				AOC12-SS1*						
		Batch ID:		H859				H859						
Parameters	MDL		PQL	Result	Validity	Comments	PQL	Result	Validity	Comments				
trans-1,3-Dichloropropene	0.0005		0.002	ND	UJ	n	0.002	ND	UJ	n				
2-Chloroethyl Vinyl Ether	0.0006		0.002	ND	UJ	n	0.002	ND	UJ	n				
Bromoform	0.0013		0.004	ND	UJ	n	0.004	ND	UJ	n				
Methyl Isobutyl Ketone	0.0015		0.005	ND	UJ	n	0.005	ND	UJ	n				
2-Hexanone	0.0027		0.009	ND	UJ	n	0.009	ND	UJ	n				
Tetrachloroethylene (pce)	0.0009		0.003	ND	UJ	n	0.003	ND	UJ	n				
1,1,2,2-Tetrachloroethane	0.00090		0.0029	ND	UJ	n	0.0028	ND	UJ	n				
Toluene	0.00090		0.0029	ND	UJ	n	0.0028	ND	UJ	n				
Chlorobenzene	0.0007		0.002	ND	UJ	n	0.002	ND	UJ	n				
Ethylbenzene	0.00043		0.0014	ND	UJ	n	0.0013	ND	UJ	n				
Styrene	0.0006		0.002	ND	UJ	n	0.002	ND	UJ	n				
1,1,2-Trichloro-1,2,2-trifluoroethane	0.0007		0.002	ND	UJ	n	0.002	ND	J	a				
Xylenes, total	0.0020		0.006	ND	UJ	n	0.006	ND	UJ	n				
1,1,1,2-Tetrachloroethane	0.0010		0.003	ND	UJ	n	0.003	ND	UJ	n				
1,2,3-Trichloropropane	0.0022		0.007	ND	UJ	n	0.007	ND	UJ	n				
Bromochloromethane	0.0007		0.002	ND	UJ	n	0.002	ND	UJ	n				
1-Chlorohexane	0.0006		0.002	ND	UJ	n	0.002	ND	UJ	n				
Bromobenzene	0.0007		0.0024	ND	UJ	n	0.0023	ND	UJ	n				
* Reanalyzed.														

Base: Kotzebue LRRS						Table 2.4								
Site: AOC12						Analytical Data Summary								
Extraction Method: EPA Method 3550						EPA Method 8270								
Analytical Method: EPA Method 8270														
Matrix: Soil														
Units: mg/kg														
			Environmental Samples											
		Field ID:		AOC12-SS1										
		Batch ID:		H859										
Parameters	MDL		PQL	Result	Validity	Comments								
Phenol	0.05		5.4	ND	UJ	e								
bis(2-Chloroethyl) Ether	0.04		3.9	ND	UJ	e								
2-Chlorophenol	0.07		7.1	ND	UJ	e								
1,3-Dichlorobenzene	0.04		3.8	ND	UJ	e								
1,4-Dichlorobenzene	0.03		2.5	ND	UJ	e								
Benzyl Alcohol	0.05		5.1	ND	UJ	e								
1,2-Dichlorobenzene	0.04		3.8	ND	UJ	e								
2-Methylphenol	0.01		9.8	ND	UJ	e								
2,2'-Oxybis (1-Chloropropane)	0.03		3.2	ND	UJ	e								
4-Methylphenol	0.08		7.6	ND	UJ	e								
N-Nitrosodi-n-propylamine	0.03		2.7	ND	UJ	e								
Hexachloroethane	0.04		3.9	ND	UJ	e								
Nitrobenzene	0.02		2.5	ND	UJ	e								
Isophorone	0.03		3.2	ND	UJ	e								
2-Nitrophenol	0.03		3.4	ND	UJ	e								
2,4-Dimethylphenol	0.17		9.4	ND	UJ	e								
Benzoic Acid	0.06		5.6	ND	UJ	e								
bis(2-Chloroethoxy) Methane	0.04		3.5	ND	UJ	e								
2,4-Dichlorophenol	0.04		4.4	ND	UJ	e								
1,2,4-Trichlorobenzene	0.03		3.3	ND	UJ	e								
Naphthalene	0.04		3.5	ND	UJ	e								
4-Chloroaniline	0.10		10	ND	UJ	e								
Hexachlorobutadiene	0.03		3.4	ND	UJ	e								
4-Chloro-3-Methylphenol	0.06		5.8	ND	UJ	e								
2-Methylnaphthalene	0.03		3.4	ND	UJ	e								
Hexachlorocyclopentadiene	0.03		2.5	ND	UJ	e								
2,4,6-Trichlorophenol	0.04		4.2	ND	UJ	e								
2,4,5-Trichlorophenol	0.03		2.5	ND	UJ	e								
2-Chloronaphthalene	0.03		3.3	ND	UJ	e								
2-Nitroaniline	0.02		1.9	ND	UJ	e								
Dimethyl Phthalate	0.04		3.5	ND	UJ	e								
Acenaphthylene	0.04		4.0	ND	UJ	e								
3-Nitroaniline	0.11		11	ND	UJ	e								
Acenaphthene	0.03		3.0	ND	UJ	e								
2,4-Dinitrophenol	0.09		8.9	ND	UJ	e								
4-Nitrophenol	0.07		6.6	ND	UJ	e								
Dibenzofuran	0.03		3.1	ND	UJ	e								
2,6-Dinitrotoluene	0.04		4.2	ND	UJ	e								

Base: Kotzebue LRRS						Table 2.4								
Site: AOC12						Analytical Data Summary								
Extraction Method: EPA Method 3550						EPA Method 8270								
Analytical Method: EPA Method 8270														
Matrix: Soil														
Units: mg/kg														
			Environmental Samples											
		Field ID:		AOC12-SS1										
		Batch ID:		H859										
Parameters			PQL	Result	Validity	Comments								
2,4-Dinitrotoluene	0.02		2.2	ND	UJ	e								
Diethyl Phthalate	0.04		3.5	ND	UJ	e								
4-Chlorophenyl Phenyl Ether	0.02		2.2	ND	UJ	e								
Fluorene	0.03		3.0	ND	UJ	e								
4-Nitroaniline	0.13		13	ND	UJ	e								
4,6-Dinitro-2-Methylphenol	0.09		8.9	ND	UJ	e								
N-Nitrosodiphenylamine	0.08		8.4	ND	UJ	e								
4-Bromophenyl Phenyl Ether	0.02		2.2	ND	UJ	e								
Hexachlorobenzene	0.03		3.2	ND	UJ	e								
Pentachlorophenol	0.03		3.3	ND	UJ	e								
Phenanthrene	0.03		3.3	ND	UJ	e								
Anthracene	0.04		4.4	ND	UJ	e								
di-n-butyl Phthalate	0.06		6.2	ND	UJ	e								
Fluroanthene	0.03		3.4	ND	UJ	e								
Pyrene	0.03		2.9	ND	UJ	e								
Butylbenzylphthalate	0.02		2.2	ND	UJ	e								
3,3'-Dichlorobenzidine	0.06		5.7	ND	UJ	e								
Benzo(a)anthracene	0.04		3.9	ND	UJ	e								
bis(2-Ethylhexyl) Phthalate	0.04		4.0	3.8	J	e								
Chrysene	0.05		4.5	ND	UJ	e								
di-n-Octylphthalate	0.02		2.3	ND	UJ	e								
Benzo(b)fluoranthene	0.04		4.3	ND	UJ	e								
Benzo(k)fluoranthene	0.07		7.4	ND	UJ	e								
Benzo(a)pyrene	0.04		4.0	ND	UJ	e								
Indeno(1,2,3-c,d)pyrene	0.03		2.7	ND	UJ	e								
Dibenzo(a,h)anthracene	0.02		2.2	ND	UJ	e								
Benzo(g,h,i)perylene	0.03		3.2	ND	UJ	e								

ANALYTICAL DATA SUMMARY
AOC2-POL LINE

Base: Kotzebue LRRS						Table 2.1									
Site: AOC2						Analytical Data Summary									
Extraction Method: EPA Method 3550						Method AK102									
Analytical Method: Method AK102															
Matrix: Soil															
Units: mg/kg															
			Environmental Samples												
		Field ID:		AOC-02-SB1-2.0				AOC-02-SB2-1.5				AOC-02-SB2-1.5DL			
		Batch ID:		H615				H615				H615			
Parameters	MDL		PQL	Result	Validity	Comments	PQL	Result	Validity	Comments	PQL	Result	Validity	Comments	
												Dilution 100			
Diesel Hydrocarbons	0.9		3.0	140		k	3.5	S*	NA	NA	350	5100		k	
* No value reported due to saturation of the detector.															

Base: Kotzebue LRRS							Table 2.1								
Site: AOC2							Analytical Data Summary								
Extraction Method: EPA Method 3550							Method AK102								
Analytical Method: Method AK102															
Matrix: Soil															
Units: mg/kg															
			Environmental Samples												
		Field ID:		AOC-02-SB3-3.5					AOC-02-SB4-2.0						
		Batch ID:		H632					H632						
Parameters	MDL		PQL	Result	Validity	Comments	PQL	Result	Validity	Comments					
Diesel Hydrocarbons	0.9		3.6	22		g	4.1	21		g					

Base: Kotzebue LRRS
Site: AOC2
Extraction Method: EPA Method 3550
Analytical Method: EPA Method 8081
Matrix: Soil
Units: mg/kg

Table 2.2
Analytical Data Summary
EPA Method 8081

				Environmental Samples												
			Field ID:		AOC-02-SB1-2.0		AOC-02-SB1-2.0				AOC-02-SB1-2.0DL			AOC-02-SB1-2.0DL		
			Batch ID:		H615		H615					H615		H615		
	DB-5	DB-608		DB-5	DB-5	DB-608	DB-608			DB-5	DB-5	DB-608	DB-608		
Parameters	MDL	MDL		PQL	Result	PQL	Result	Validity	Comments	PQL	Result	PQL	Result	Validity	Comments
											Dilution 50		Dilution 50		
alpha BHC	0.0001	0.0001		0.00022	ND	0.00019	ND	U	g	0.011	ND	0.0096	ND	U	g
beta BHC	0.0001	0.0001		0.00032	0.0070	0.00030	ND	U	h	0.016	ND	0.015	ND	U	g
delta BHC	0.0001	0.0001		0.00033	0.0028	0.00025	ND	U	h	0.017	ND	0.012	ND	U	g
gamma BHC (Lindane)	0.0001	0.0001		0.00026	ND	0.00022	ND	U	g	0.013	ND	0.011	ND	U	g
Heptachlor	0.0001	0.0001		0.0003	ND	0.0003	ND	U	g	0.015	ND	0.015	ND	U	g
Aldrin	0.0001	0.0001		0.00021	ND	0.00027	ND	U	g	0.010	ND	0.014	ND	U	g
Heptachlor Epoxide	0.0001	0.0001		0.00026	0.013	0.00033	0.00095	J	a,n	0.013	0.14	0.017	ND	U	a,h
Endosulfan I	0.0001	0.0001		0.00038	0.0052	0.00038	ND	U	h	0.019	ND	0.019	ND	U	g
Dieldrin	0.0001	0.0002		0.0004	ND	0.0005	ND	U	g	0.021	ND	0.025	ND	U	g
4,4'-DDE	0.0001	0.0002		0.0003	0.078 E**	0.0005	0.077 E**	J	n	0.017	0.23	0.025	0.19		g
Endrin	0.0001	0.0001		0.0003	0.0011	0.0003	0.0029	J	a,n	0.017	ND	0.017	ND	R	a
Endosulfan II	0.0002	0.0002		0.0006	ND	0.0005	ND	U	g	0.028	0.12	0.027	ND	U	h
4,4'-DDD	0.0001	0.0001		0.0004	0.18 E**	0.0005	0.18 E**	J	k,n	0.021	0.29	0.024	0.30		k
Endosulfan Sulfate	0.0002	0.0002		0.0008	ND	0.0008	ND	U	g	0.042	ND	0.042	ND	U	g
4,4'-DDT	0.0002	0.0001		0.0008	S*	0.0004	S*	NA	NA	0.039	1.6	0.022	1.5		a
Methoxychlor	0.0008	0.0011		0.0029	ND	0.0037	ND	U	g	0.15	ND	0.18	ND	U	g
Endrin Aldehyde	0.0002	0.0003		0.0008	ND	0.0009	ND	U	g	0.038	0.080	0.045	ND	U	h
gamma-Chlordane	0.0001	0.0001		0.00018	ND	0.00027	ND	U	g	0.0091	ND	0.014	ND	U	g
alpha-Chlordane	0.0001	0.0001		0.00022	ND	0.00038	ND	U	g	0.011	ND	0.019	ND	U	g
Toxaphene	0.007	0.009		0.03	ND	0.03	ND	U	g	1.3	ND	1.5	ND	U	g
Arochlor 1016	0.009	0.009		0.03	ND	0.03	ND	U	g	1.5	ND	1.5	ND	U	g
Arochlor 1242	0.005	0.008		0.02	ND	0.03	ND	U	g	0.91	ND	1.3	ND	U	g
Arochlor 1248	0.004	0.005		0.01	ND	0.02	ND	U	g	0.60	ND	0.81	ND	U	g
Arochlor 1254	0.011	0.009		0.04	ND	0.03	ND	U	g	1.8	ND	1.5	ND	U	g
Arochlor 1260	0.009	0.010		0.03	ND	0.02	ND	U	g	1.5	ND	0.77	ND	U	g
Arochlor 1221	0.011	0.010		0.04	ND	0.03	ND	U	g	1.8	ND	1.6	ND	U	g
Arochlor 1232	0.005	0.005		0.02	ND	0.02	ND	U	g	0.77	ND	0.08	ND	U	g

* No value reported due to saturation of the detector.
** Analyte detected above linear calibration range.

Base: Kotzebue LRRS							Table 2.2								
Site: AOC2							Analytical Data Summary								
Extraction Method: EPA Method 3550							EPA Method 8081								
Analytical Method: EPA Method 8081															
Matrix: Soil															
Units: mg/kg															
				Environmental Samples											
			Field ID:		AOC-02-SB2-1.5		AOC-02-SB2-1.5								
			Batch ID:		H615		H615								
	DB-5	DB-608		DB-5	DB-5	DB-608	DB-608								
Parameters	MDL	MDL		PQL	Result	PQL	Result	Validity	Comments						
					Dilution 10		Dilution 10								
alpha BHC	0.0001	0.0001		0.0024	ND	0.0022	ND	U	g						
beta BHC	0.0001	0.0001		0.0037	ND	0.0034	ND	U	g						
delta BHC	0.0001	0.0001		0.0038	ND	0.0028	ND	U	g						
gamma BHC (Lindane)	0.0001	0.0001		0.0030	ND	0.0025	ND	U	g						
Heptachlor	0.0001	0.0001		0.0034	ND	0.0034	ND	U	g						
Aldrin	0.0001	0.0001		0.0024	ND	0.0031	ND	U	g						
Heptachlor Epoxide	0.0001	0.0001		0.0030	0.0084	0.0038	0.0016	J	a,b,n						
Endosulfan I	0.0001	0.0001		0.0044	ND	0.0044	ND	U	g						
Dieldrin	0.0001	0.0002		0.0047	ND	0.0058	ND	U	g						
4,4'-DDE	0.0001	0.0002		0.0038	0.053	0.0057	0.049	J	b						
Endrin	0.0001	0.0001		0.0038	0.012	0.0040	0.0076	J	a,b,n						
Endosulfan II	0.0002	0.0002		0.0063	ND	0.0061	ND	U	g						
4,4'-DDD	0.0001	0.0001		0.0047	0.17	0.0055	0.16	J	b,k						
Endosulfan Sulfate	0.0002	0.0002		0.0095	ND	0.0095	ND	U	g						
4,4'-DDT	0.0002	0.0001		0.0089	0.017	0.0051	0.012	J	a,b						
Methoxychlor	0.0008	0.0011		0.033	ND	0.042	ND	U	g						
Endrin Aldehyde	0.0002	0.0003		0.0086	ND	0.010	ND	U	g						
gamma-Chlordane	0.0001	0.0001		0.0021	ND	0.0031	ND	U	g						
alpha-Chlordane	0.0001	0.0001		0.0024	0.011	0.0044	ND	U	b,h						
Toxaphene	0.007	0.009		0.29	ND	0.35	ND	U	g						
Arochlor 1016	0.009	0.009		0.34	ND	0.33	ND	U	g						
Arochlor 1242	0.005	0.008		0.21	ND	0.29	ND	U	g						
Arochlor 1248	0.004	0.005		0.14	ND	0.18	ND	U	g						
Arochlor 1254	0.011	0.009		0.41	ND	0.35	ND	U	g						
Arochlor 1260	0.009	0.010		0.33	ND	0.18	ND	U	g						
Arochlor 1221	0.011	0.010		0.41	ND	0.37	ND	U	g						
Arochlor 1232	0.005	0.005		0.18	ND	0.02	ND	U	g						

Base: Kotzebue LRRS

Site: AOC2

Extraction Method: EPA Method 3550

Analytical Method: EPA Method 8081

Matrix: Soil

Units: mg/kg

Table 2.2
Analytical Data Summary
EPA Method 8081

			Environmental Samples												
			Field ID:	AOC-02-SB3-3.5		AOC-02-SB3-3.5				AOC-02-SB3-3.5DL		AOC-02-SB3-3.5DL			
			Batch ID:	H632		H632					H632		H632		
	DB-5	DB-608	DB-5	DB-5	DB-608	DB-608			DB-5	DB-5	DB-608	DB-608		
Parameters	MDL	MDL	PQL	Result	PQL	Result	Validity	Comments	PQL	Result Dilution 50	PQL	Result Dilution 50	Validity	Comments
alpha BHC	0.0001	0.0001	0.00025	ND	0.00023	ND	U	a	0.013	ND	0.011	ND	U	a
beta BHC	0.0001	0.0001	0.00038	0.0036	0.00036	ND	U	h	0.019	ND	0.018	ND	U	g
delta BHC	0.0001	0.0001	0.00039	ND	0.00029	ND	U	g	0.020	ND	0.015	ND	U	g
gamma BHC (Lindane)	0.0001	0.0001	0.00031	ND	0.00026	ND	U	g	0.016	ND	0.013	ND	U	g
Heptachlor	0.0001	0.0001	0.0004	ND	0.0004	ND	U	g	0.018	ND	0.018	ND	U	g
Aldrin	0.0001	0.0001	0.00025	0.0025	0.00032	ND	U	h	0.012	ND	0.016	ND	U	g
Heptachlor Epoxide	0.0001	0.0001	0.00031	0.0019	0.00039	ND	U	a,h	0.016	0.029	0.020	ND	U	a,h
Endosulfan I	0.0001	0.0001	0.00045	ND	0.00045	ND	U	g	0.023	ND	0.023	ND	U	g
Dieldrin	0.0001	0.0002	0.0005	ND	0.0006	ND	U	g	0.024	ND	0.030	ND	U	g
4,4'-DDE	0.0001	0.0002	0.0004	0.12 E**	0.0006	0.11 E**	J	n	0.020	0.26	0.030	0.20		g
Endrin	0.0001	0.0001	0.0004	0.0026	0.0004	0.0020	J	n	0.020	ND	0.021	ND	U	g
Endosulfan II	0.0002	0.0002	0.0006	0.0018	0.0006	ND	U	a,h	0.032	ND	0.031	ND	U	a
4,4'-DDD	0.0001	0.0001	0.0005	0.066	0.0006	0.51		a	0.024	0.20	0.029	0.21		a
Endosulfan Sulfate	0.0002	0.0002	0.0010	ND	0.0010	ND	U	g	0.049	ND	0.049	ND	U	g
4,4'-DDT	0.0002	0.0001	0.0009	1.0 E**	0.0005	1.4 E**	J	n	0.046	2.0	0.026	2.0		a
Methoxychlor	0.0008	0.0011	0.0034	ND	0.0043	ND	U	g	0.17	ND	0.22	ND	U	g
Endrin Aldehyde	0.0002	0.0003	0.0009	ND	0.0011	ND	U	a	0.045	ND	0.053	ND	U	a
gamma-Chlordane	0.0001	0.0001	0.00022	ND	0.00032	ND	U	g	0.011	ND	0.016	ND	U	g
alpha-Chlordane	0.0001	0.0001	0.00025	0.0028	0.00045	ND	U	h	0.013	0.052	0.023	ND	U	h
Toxaphene	0.007	0.009	0.03	ND	0.04	ND	U	g	1.5	ND	1.8	ND	U	g
Arochlor 1016	0.009	0.009	0.04	ND	0.03	ND	U	g	1.8	ND	1.7	ND	U	g
Arochlor 1242	0.005	0.008	0.02	ND	0.03	ND	U	g	1.1	ND	1.5	ND	U	g
Arochlor 1248	0.004	0.005	0.01	ND	0.02	ND	U	g	0.71	ND	0.95	ND	U	g
Arochlor 1254	0.011	0.009	0.04	ND	0.04	ND	U	g	2.1	ND	1.8	ND	U	g
Arochlor 1260	0.009	0.010	0.03	ND	0.02	ND	U	g	1.7	ND	0.91	ND	U	g
Arochlor 1221	0.011	0.010	0.04	ND	0.04	ND	U	g	2.1	ND	1.9	ND	U	g
Arochlor 1232	0.005	0.005	0.02	ND	0.00	ND	U	g	0.09	ND	0.91	ND	U	g

** Analyte detected above linear calibration range.

Base: Kotzebue LRRS
Site: AOC2
Extraction Method: EPA Method 3550
Analytical Method: EPA Method 8081
Matrix: Soil
Units: mg/kg

Table 2.2
Analytical Data Summary
EPA Method 8081

				Environmental Samples											
			Field ID:		AOC-02-SB4-2.0		AOC-02-SB4-2.0			AOC-02-SB4-2.0DL		AOC-02-SB4-2.0DL			
			Batch ID:		H632		H632				H632		H632		
	DB-5	DB-608		DB-5	DB-5	DB-608	DB-608			DB-5	DB-5	DB-608	DB-608		
Parameters	MDL	MDL		PQL	Result	PQL	Result	Validity	Comments	PQL	Result Dilution 50	PQL	Result Dilution 50	Validity	Comments
alpha BHC	0.0001	0.0001		0.00029	0.0022	0.00026	ND	U	a,h	0.014	ND	0.013	ND	U	a
beta BHC	0.0001	0.0001		0.00043	0.0013	0.00040	ND	U	h	0.022	ND	0.020	ND	U	g
delta BHC	0.0001	0.0001		0.00045	0.0025	0.00033	ND	U	h	0.022	ND	0.017	ND	U	g
gamma BHC (Lindane)	0.0001	0.0001		0.00035	ND	0.00029	ND	U	g	0.018	ND	0.015	ND	U	g
Heptachlor	0.0001	0.0001		0.0004	ND	0.0004	ND	U	g	0.020	ND	0.020	ND	U	g
Aldrin	0.0001	0.0001		0.00028	0.0018	0.00036	ND	U	h	0.014	ND	0.018	ND	U	g
Heptachlor Epoxide	0.0001	0.0001		0.00035	0.010	0.00045	0.00028	J	a,n	0.018	ND	0.022	ND	U	a
Endosulfan I	0.0001	0.0001		0.00051	ND	0.00051	ND	U	g	0.026	ND	0.026	ND	U	g
Dieldrin	0.0001	0.0002		0.0005	ND	0.0007	ND	U	g	0.027	ND	0.034	ND	U	g
4,4'-DDE	0.0001	0.0002		0.0005	0.10 E**	0.0007	0.097 E**	J	n	0.023	0.20	0.034	0.19		g
Endrin	0.0001	0.0001		0.0004	0.0025	0.0005	0.0026	J	n	0.022	ND	0.023	ND	U	g
Endosulfan II	0.0002	0.0002		0.0007	0.0030	0.0007	ND	U	a,h	0.037	ND	0.036	ND	U	a
4,4'-DDD	0.0001	0.0001		0.0005	0.050	0.0006	0.43		a	0.027	0.18	0.033	0.41		a
Endosulfan Sulfate	0.0002	0.0002		0.0011	ND	0.0011	ND	U	g	0.056	ND	0.056	ND	U	g
4,4'-DDT	0.0002	0.0001		0.0010	1.2 E**	0.0006	1.6 E**	J	a,n	0.052	1.3	0.030	1.3		a
Methoxychlor	0.0008	0.0011		0.0039	ND	0.0049	ND	U	g	0.19	ND	0.24	ND	U	g
Endrin Aldehyde	0.0002	0.0003		0.0010	0.0012	0.0012	ND	U	a,h	0.051	ND	0.060	ND	U	a
gamma-Chlordane	0.0001	0.0001		0.00024	ND	0.00036	ND	U	g	0.012	ND	0.018	ND	U	g
alpha-Chlordane	0.0001	0.0001		0.00029	0.0025	0.00051	ND	U	h	0.014	ND	0.026	ND	U	g
Toxaphene	0.007	0.009		0.03	ND	0.04	ND	U	g	1.7	ND	2.1	ND	U	g
Arochlor 1016	0.009	0.009		0.04	ND	0.04	ND	U	g	2.0	ND	1.9	ND	U	g
Arochlor 1242	0.005	0.008		0.02	ND	0.03	ND	U	g	1.2	ND	1.7	ND	U	g
Arochlor 1248	0.004	0.005		0.02	ND	0.02	ND	U	g	0.80	ND	1.1	ND	U	g
Arochlor 1254	0.011	0.009		0.05	ND	0.04	ND	U	g	2.4	ND	2.1	ND	U	g
Arochlor 1260	0.009	0.010		0.04	ND	0.02	ND	U	g	2.0	ND	1.0	ND	U	g
Arochlor 1221	0.011	0.010		0.05	ND	0.04	ND	U	g	2.4	ND	2.1	ND	U	g
Arochlor 1232	0.005	0.005		0.02	ND	0.00	ND	U	g	1.0	ND	0.10	ND	U	g

** Analyte detected above linear calibration range.

Base: Kotzebue LRRS					Table 2.3						
Site: AOC2					Analytical Data Summary						
Extraction Method: EPA Method 8260					EPA Method 8260						
Analytical Method: EPA Method 8260											
Matrix: Soil											
Units: mg/kg											
			Environmental Samples								
		Field ID:		AOC-02-SB1-2.0				AOC-02-SB2-1.5			
		Batch ID:		H615				H615			
Parameters	MDL		PQL	Result	Validity	Comments	PQL	Result	Validity	Comments	
Chloromethane	0.0009		0.003	ND	U	g	0.38	ND	U	g	
Bromomethane	0.0008		0.003	ND	U	g	0.35	ND	U	g	
Vinyl Chloride	0.0010		0.003	ND	U	g	0.41	ND	U	g	
Chloroethane	0.0010		0.003	ND	U	g	0.43	ND	U	g	
Methylene Chloride	0.0009		0.003	0.001	B J	a	0.37	0.17	B J	a	
Acetone	0.0039		0.01	0.01	J		1.7	0.62	B J	a	
Carbon Disulfide	0.0005		0.002	ND	U	g	0.23	ND	U	g	
1,1-Dichloroethene	0.0012		0.004	ND	U	g	0.50	ND	U	g	
1,1-Dichloroethane	0.0004		0.001	ND	U	g	0.15	ND	U	g	
trans-1,2-Dichloroethene	0.0009		0.003	ND	U	g	0.38	ND	U	g	
cis-1,2-Dichloroethylene	0.0011		0.004	0.024		g	0.49	ND	U	g	
Chloroform	0.0005		0.002	ND	U	g	0.20	ND	U	g	
1,2-Dichloroethane	0.0005		0.002	ND	U	g	0.21	ND	U	g	
Methyl Ethyl Ketone (2-butanone)	0.0025		0.008	0.006	J		1.1	0.59	J		
1,1,1-Trichloroethane	0.0004		0.001	ND	U	g	0.18	ND	U	g	
Carbon Tetrachloride	0.0010		0.003	ND	U	g	0.42	ND	U	g	
Vinyl Acetate	0.0016		0.006	ND	U	g	0.69	ND	U	g	
Bromodichloromethane	0.0006		0.002	ND	U	g	0.28	ND	U	g	
1,2-Dichloropropane	0.0008		0.003	ND	U	g	0.36	ND	U	g	
cis-1,3-Dichloropropene	0.0007		0.002	ND	U	g	0.30	ND	U	g	
Trichloroethylene (tce)	0.0005		0.002	0.002	J		0.23	ND	U	g	
Dibromochloromethane	0.0003		0.001	ND	U	g	0.15	ND	U	g	
1,1,2-Trichloroethane	0.0007		0.002	ND	U	g	0.30	ND	U	g	
Benzene	0.0005		0.0016	ND	U	g	0.20	ND	U	g	

Base: Kotzebue LRRS						Table 2.3						
Site: AOC2						Analytical Data Summary						
Extraction Method: EPA Method 8260						EPA Method 8260						
Analytical Method: EPA Method 8260												
Matrix: Soil												
Units: mg/kg												
			Environmental Samples									
		Field ID:		AOC-02-SB1-2.0				AOC-02-SB2-1.5				
		Batch ID:		H615				H615				
Parameters	MDL		PQL	Result	Validity	Comments	PQL	Result	Validity	Comments		
trans-1,3-Dichloropropene	0.0005		0.002	ND	U	g	0.23	ND	U	g		
2-Chloroethyl Vinyl Ether	0.0006		0.002	ND	U	g	0.27	ND	U	g		
Bromoform	0.0013		0.004	ND	U	g	0.54	ND	U	g		
Methyl Isobutyl Ketone	0.0015		0.005	ND	U	g	0.64	ND	U	g		
2-Hexanone	0.0027		0.009	ND	U	g	1.2	ND	U	g		
Tetrachloroethylene (pce)	0.0009		0.003	ND	U	g	0.39	ND	U	g		
1,1,2,2-Tetrachloroethane	0.0009		0.0031	ND	U	g	0.39	ND	U	g		
Toluene	0.0009		0.0031	ND	U	g	0.39	ND	U	g		
Chlorobenzene	0.0003		0.002	ND	U	g	0.31	ND	U	g		
Ethylbenzene	0.0004		0.0015	0.0006	J		0.18	ND	U	g		
Styrene	0.0006		0.002	ND	U	g	0.27	ND	U	g		
1,1,2-Trichloro-1,2,2-trifluoroethane	0.0007		0.003	ND	U	g	0.32	ND	U	g		
Xylenes, total	0.0020		0.007	0.006	J		0.86	ND	U	g		
1,1,1,2-Tetrachloroethane	0.0010		0.003	ND	U	g	0.43	ND	U	g		
1,2,3-Trichloropropane	0.0023		0.008	ND	U	g	0.97	ND	U	g		
Bromochloromethane	0.0007		0.002	ND	U	g	0.29	ND	U	g		
1-Chlorohexane	0.0007		0.002	ND	U	g	0.28	ND	U	g		
Bromobenzene	0.0007		0.0025	ND	U	g	0.31	ND	U	g		

Base: Kotzebue LRRS

Site: AOC2

Table 2.3

Analytical Data Summary

EPA Method 8260

Extraction Method: EPA Method 8260

Analytical Method: EPA Method 8260

Matrix: Soil

Units: mg/kg

			Environmental Samples								
		Field ID:		AOC-02-SB3-3.5				AOC-02-SB4-2.0			
		Batch ID:		H632				H632			
Parameters	MDL		PQL	Result	Validity	Comments	PQL	Result	Validity	Comments	
Chloromethane	0.0009		0.003	ND	U	g	0.003	ND	U	g	
Bromomethane	0.0008		0.003	ND	U	g	0.003	ND	U	g	
Vinyl Chloride	0.0010		0.003	ND	U	g	0.003	ND	U	g	
Chloroethane	0.00110		0.003	ND	U	g	0.003	ND	U	g	
Methylene Chloride	0.0009		0.003	0.002	B J	a	0.003	0.002	B J	a	
Acetone	0.0039		0.01	ND	U	g	0.01	ND	U	g	
Carbon Disulfide	0.0005		0.002	ND	U	g	0.002	ND	U	g	
1,1-Dichloroethene	0.0012		0.004	ND	U	g	0.004	ND	U	g	
1,1-Dichloroethane	0.0004		0.001	ND	U	g	0.001	ND	U	g	
trans-1,2-Dichloroethene	0.0009		0.003	ND	U	g	0.003	ND	U	g	
cis-1,2-Dichloroethylene	0.0011		0.004	ND	U	g	0.004	ND	U	g	
Chloroform	0.0005		0.002	ND	U	g	0.002	ND	U	g	
1,2-Dichloroethane	0.0005		0.002	ND	U	g	0.002	ND	U	g	
Methyl Ethyl Ketone (2-butanone)	0.0025		0.008	ND	U	g	0.009	ND	U	g	
1,1,1-Trichloroethane	0.0004		0.001	ND	U	g	0.001	ND	U	g	
Carbon Tetrachloride	0.0010		0.003	ND	U	g	0.003	ND	U	g	
Vinyl Acetate	0.0016		0.005	ND	U	g	0.006	ND	U	g	
Bromodichloromethane	0.0006		0.002	ND	U	g	0.002	ND	U	g	
1,2-Dichloropropane	0.0008		0.003	ND	U	g	0.003	ND	U	g	
cis-1,3-Dichloropropene	0.0007		0.002	ND	U	g	0.002	ND	U	g	
Trichloroethylene (tce)	0.0005		0.002	ND	U	g	0.002	ND	U	g	
Dibromochloromethane	0.0003		0.001	ND	U	g	0.001	ND	U	g	
1,1,2-Trichloroethane	0.0007		0.002	ND	U	g	0.002	ND	U	g	
Benzene	0.0005		0.0016	ND	U	g	0.0016	ND	U	g	

Base: Kotzebue LRRS					Table 2.3							
Site: AOC2					Analytical Data Summary							
Extraction Method: EPA Method 8260					EPA Method 8260							
Analytical Method: EPA Method 8260												
Matrix: Soil												
Units: mg/kg												
			Environmental Samples									
		Field ID:		AOC-02-SB3-3.5				AOC-02-SB4-2.0				
		Batch ID:		H632				H632				
Parameters	MDL		PQL	Result	Validity	Comments	PQL	Result	Validity	Comments		
trans-1,3-Dichloropropene	0.0005		0.002	ND	U	g	0.002	ND	U	g		
2-Chloroethyl Vinyl Ether	0.0006		0.002	ND	U	g	0.002	ND	U	g		
Bromoform	0.0013		0.004	ND	U	g	0.004	ND	U	g		
Methyl Isobutyl Ketone	0.0015		0.005	ND	U	g	0.005	ND	U	g		
2-Hexanone	0.0027		0.009	ND	U	g	0.009	ND	U	g		
Tetrachloroethylene (pce)	0.0009		0.003	ND	U	g	0.003	ND	U	g		
1,1,2,2-Tetrachloroethane	0.0009		0.0031	ND	U	g	0.0031	ND	U	g		
Toluene	0.0009		0.0031	0.0011	J		0.0031	ND	U	g		
Chlorobenzene	0.0003		0.002	ND	U	g	0.002	ND	U	g		
Ethylbenzene	0.0004		0.0015	ND	U	g	0.0015	ND	U	g		
Styrene	0.0006		0.002	ND	U	g	0.002	ND	U	g		
1,1,2-Trichloro-1,2,2-trifluoroethane	0.0007		0.003	ND	U	g	0.003	ND	U	g		
Xylenes, total	0.0020		0.007	0.003	J		0.007	ND	U	g		
1,1,1,2-Tetrachloroethane	0.0010		0.003	ND	U	g	0.003	ND	U	g		
1,2,3-Trichloropropane	0.0023		0.008	ND	U	g	0.008	ND	U	g		
Bromochloromethane	0.0007		0.002	ND	U	g	0.002	ND	U	g		
1-Chlorohexane	0.0007		0.002	ND	U	g	0.002	ND	U	g		
Bromobenzene	0.0007		0.0025	ND	U	g	0.0025	ND	U	g		

Base: Kotzebue LRRS
Site: AOC2
Extraction Method: EPA Method 3550
Analytical Method: EPA Method 8270
Matrix: Soil
Units: mg/kg

Table 9.2.1.4
Analytical Data Summary
EPA Method 8270

			Environmental Samples							
		Field ID:		AOC-02-SB1-2.0				AOC-02-SB2-1.5		
		Batch ID:		H615				H615		
Parameters	MDL		PQL	Result	Validity	Comments	PQL	Result	Validity	Comments
Phenol	0.05		0.2	ND	U	g	0.2	ND	U	g
bis(2-Chloroethyl) Ether	0.04		0.1	ND	U	g	0.2	ND	U	g
2-Chlorophenol	0.07		0.2	ND	U	g	0.3	ND	U	g
1,3-Dichlorobenzene	0.04		0.1	ND	U	k	0.2	ND	U	k
1,4-Dichlorobenzene	0.03		0.1	ND	U	g	0.1	ND	U	g
Benzyl Alcohol	0.05		0.2	ND	U	g	0.2	ND	U	g
1,2-Dichlorobenzene	0.04		0.1	ND	U	g	0.1	ND	U	g
2-Methylphenol	0.10		0.3	ND	U	g	0.4	ND	U	g
2,2-Oxybis (1-Chloropropane)	0.03		0.1	ND	U	g	0.1	ND	U	g
4-Methylphenol	0.08		0.3	ND	U	g	0.3	ND	U	g
N-Nitrosodi-n-propylamine	0.03		0.1	ND	U	g	0.1	ND	U	g
Hexachloroethane	0.04		0.1	ND	U	g	0.2	ND	U	g
Nitrobenzene	0.02		0.1	ND	U	g	0.3	ND	U	g
Isophorone	0.03		0.1	ND	U	g	0.7	ND	U	g
2-Nitrophenol	0.03		0.1	ND	U	g	0.2	ND	U	g
2,4-Dimethylphenol	0.17		0.3	ND	U	g	0.4	ND	U	g
Benzoic Acid	0.06		0.19	ND	U	g	0.46	ND	U	g
bis(2-Chloroethoxy) Methane	0.04		0.1	ND	U	g	0.1	ND	U	g
2,4-Dichlorophenol	0.04		0.2	ND	U	g	0.2	0.1	J	
1,2,4-Trichlorobenzene	0.03		0.1	ND	U	g	0.1	ND	U	g
Naphthalene	0.04		0.1	ND	U	g	0.1	ND	U	g
4-Chloroaniline	0.10		0.3	ND	U	g	0.4	ND	U	g
Hexachlorobutadiene	0.03		0.1	ND	U	g	0.1	ND	U	g
4-Chloro-3-Methylphenol	0.06		0.2	ND	U	g	0.4	ND	U	g
2-Methylnaphthalene	0.03		0.1	ND	U	g	0.1	ND	U	g
Hexachlorocyclopentadiene	0.03		0.1	ND	U	g	0.1	ND	U	g
2,4,6-Trichlorophenol	0.04		0.1	ND	U	g	0.2	ND	U	g
2,4,5-Trichlorophenol	0.03		0.09	ND	U	g	0.10	ND	U	g
2-Chloronaphthalene	0.03		0.1	ND	U	g	0.1	ND	U	g
2-Nitroaniline	0.02		0.06	ND	U	g	0.57	ND	U	g
Dimethyl Phthalate	0.04		0.1	ND	U	k	0.1	ND	U	k
Acenaphthylene	0.04		0.1	ND	U	g	0.2	ND	U	g
3-Nitroaniline	0.11		0.38	ND	U	g	0.44	ND	U	g
Acenaphthene	0.03		0.1	ND	U	g	0.1	ND	U	g
2,4-Dinitrophenol	0.09		0.30	ND	U	g	0.35	ND	U	g
4-Nitrophenol	0.07		0.27	ND	U	g	1.2	ND	U	g
Dibenzofuran	0.03		0.1	ND	U	g	0.1	ND	U	g
2,6-Dinitrotoluene	0.04		0.1	ND	U	g	0.2	ND	U	g

Base: Kotzebue LRRS						Table 9.2.1.4								
Site: AOC2						Analytical Data Summary								
Extraction Method: EPA Method 3550						EPA Method 8270								
Analytical Method: EPA Method 8270														
Matrix: Soil														
Units: mg/kg														
			Environmental Samples											
		Field ID:		AOC-02-SB1-2.0				AOC-02-SB2-1.5						
		Batch ID:		H615				H615						
Parameters	MDL		PQL	Result	Validity	Comments	PQL	Result	Validity	Comments				
2,4-Dinitrotoluene	0.02		0.1	ND	U	g	0.1	0.2		g				
Diethyl Phthalate	0.04		0.1	ND	U	g	0.1	ND	U	g				
4-Chlorophenyl Phenyl Ether	0.02		0.1	ND	U	g	0.1	ND	U	g				
Fluorene	0.03		0.1	ND	U	g	0.1	0.2		g				
4-Nitroaniline	0.13		0.45	ND	U	g	0.52	ND	U	g				
4,6-Dinitro-2-Methylphenol	0.09		0.30	ND	U	g	0.35	ND	U	g				
N-Nitrosodiphenylamine	0.08		0.3	ND	U	g	0.3	ND	U	g				
4-Bromophenyl Phenyl Ether	0.02		0.1	ND	U	g	0.1	ND	U	g				
Hexachlorobenzene	0.03		0.1	ND	U	g	0.1	ND	U	g				
Pentachlorophenol	0.03		0.11	ND	U	g	0.13	ND	U	g				
Phenanthrene	0.03		0.1	ND	U	g	0.1	0.1	J					
Anthracene	0.04		0.1	ND	U	g	0.2	ND	U	g				
di-n-butyl Phthalate	0.06		0.2	ND	U	g	0.2	ND	U	g				
Fluoranthene	0.03		0.1	ND	U	g	0.1	ND	U	g				
Pyrene	0.03		0.1	ND	U	g	0.1	0.1	J					
Butylbenzylphthalate	0.02		0.1	ND	U	g	0.1	ND	U	g				
3,3'-Dichlorobenzidine	0.06		0.2	ND	U	g	0.2	ND	U	g				
Benzo(a)anthracene	0.04		0.1	ND	U	g	0.2	ND	U	g				
bis(2-Ethylhexyl) Phthalate	0.04		0.1	ND	U	g	0.2	0.3		g				
Chrysene	0.05		0.2	ND	U	g	0.2	ND	U	g				
di-n-Octylphthalate	0.02		0.1	ND	U	g	0.1	ND	U	g				
Benzo(b)fluoranthene	0.04		0.1	ND	U	g	0.2	ND	U	g				
Benzo(k)fluoranthene	0.07		0.3	ND	U	g	0.3	ND	U	g				
Benzo(a)pyrene	0.04		0.1	ND	U	g	0.2	ND	U	g				
Indeno(1,2,3-c,d)pyrene	0.03		0.1	ND	U	g	0.1	ND	U	g				
Dibenzo(a,h)anthracene	0.02		0.1	ND	U	g	0.1	ND	U	g				
Benzo(g,h,i)perylene	0.03		0.1	ND	U	g	0.1	ND	U	g				

Base: Kotzebue LRRS
Site: AOC2
Extraction Method: EPA Method 3550
Analytical Method: EPA Method 8270
Matrix: Soil
Units: mg/kg

Table 9.2.1.4
Analytical Data Summary
EPA Method 8270

			Environmental Samples							
		Field ID:		AOC-02-SB3-3.5				AOC-02-SB4-2.0		
		Batch ID:		H632				H632		
Parameters	MDL		PQL	Result	Validity	Comments	PQL	Result	Validity	Comments
Phenol	0.05		0.2	ND	U	g	0.2	ND	U	g
bis(2-Chloroethyl) Ether	0.04		0.2	ND	U	g	0.2	ND	U	g
2-Chlorophenol	0.07		0.3	ND	U	g	0.3	ND	U	g
1,3-Dichlorobenzene	0.04		0.2	ND	U	g	0.2	ND	U	g
1,4-Dichlorobenzene	0.03		0.1	ND	U	g	0.1	ND	U	g
Benzyl Alcohol	0.05		0.2	ND	U	g	0.2	ND	U	g
1,2-Dichlorobenzene	0.04		0.1	ND	U	g	0.2	ND	U	g
2-Methylphenol	0.10		0.4	ND	U	g	0.4	ND	U	g
2,2-Oxybis (1-Chloropropane)	0.03		0.1	ND	U	g	0.1	ND	U	g
4-Methylphenol	0.08		0.3	ND	U	g	0.4	ND	U	g
N-Nitrosodi-n-propylamine	0.03		0.1	ND	U	g	0.1	ND	U	g
Hexachloroethane	0.04		0.2	ND	U	g	0.2	ND	U	g
Nitrobenzene	0.02		0.1	ND	U	g	0.1	ND	U	g
Isophorone	0.03		0.1	ND	U	g	0.1	ND	U	g
2-Nitrophenol	0.03		0.1	ND	U	g	0.2	ND	U	g
2,4-Dimethylphenol	0.17		0.4	ND	U	g	0.4	ND	U	g
Benzoic Acid	0.06		0.22	ND	U	g	0.26	ND	U	g
bis(2-Chloroethoxy) Methane	0.04		0.1	ND	U	g	0.2	ND	U	g
2,4-Dichlorophenol	0.04		0.2	ND	U	g	0.2	ND	U	g
1,2,4-Trichlorobenzene	0.03		0.1	ND	U	g	0.2	ND	U	g
Naphthalene	0.04		0.1	ND	U	g	0.2	ND	U	g
4-Chloroaniline	0.10		0.4	ND	U	g	0.5	ND	U	g
Hexachlorobutadiene	0.03		0.1	ND	U	g	0.2	ND	U	g
4-Chloro-3-Methylphenol	0.06		0.2	ND	U	g	0.3	ND	U	g
2-Methylnaphthalene	0.03		0.1	ND	U	g	0.2	ND	U	g
Hexachlorocyclopentadiene	0.03		0.1	ND	U	g	0.1	ND	U	g
2,4,6-Trichlorophenol	0.04		0.2	ND	U	g	0.2	ND	U	g
2,4,5-Trichlorophenol	0.03		0.10	ND	U	g	0.11	ND	U	g
2-Chloronaphthalene	0.03		0.1	ND	U	g	0.2	ND	U	g
2-Nitroaniline	0.02		0.08	ND	U	g	0.09	ND	U	g
Dimethyl Phthalate	0.04		0.1	ND	U	g	0.2	ND	U	g
Acenaphthylene	0.04		0.2	ND	U	g	0.2	ND	U	g
3-Nitroaniline	0.11		0.44	ND	U	g	0.51	ND	U	g
Acenaphthene	0.03		0.1	ND	U	g	0.1	ND	U	g
2,4-Dinitrophenol	0.09		0.35	ND	U	g	0.41	ND	U	g
4-Nitrophenol	0.07		0.26	ND	U	g	0.30	ND	U	g
Dibenzofuran	0.03		0.1	ND	U	g	0.1	ND	U	g
2,6-Dinitrotoluene	0.04		0.2	ND	U	g	0.2	ND	U	g

Base: Kotzebue LRRS
Site: AOC2
Extraction Method: EPA Method 3550
Analytical Method: EPA Method 8270
Matrix: Soil
Units: mg/kg

Table 9.2.1.4
Analytical Data Summary
EPA Method 8270

			Environmental Samples							
		Field ID:		AOC-02-SB3-3.5				AOC-02-SB4-2.0		
		Batch ID:		H632				H632		
Parameters	MDL		PQL	Result	Validity	Comments	PQL	Result	Validity	Comments
2,4-Dinitrotoluene	0.02		0.1	ND	U	g	0.1	ND	U	g
Diethyl Phthalate	0.04		0.1	ND	U	g	0.2	ND	U	g
4-Chlorophenyl Phenyl Ether	0.02		0.1	ND	U	g	0.1	ND	U	g
Fluorene	0.03		0.1	ND	U	g	0.1	ND	U	g
4-Nitroaniline	0.13		0.53	ND	U	g	0.61	ND	U	g
4,6-Dinitro-2-Methylphenol	0.09		0.35	ND	U	g	0.41	ND	U	g
N-Nitrosodiphenylamine	0.08		0.3	ND	U	g	0.4	ND	U	g
4-Bromophenyl Phenyl Ether	0.02		0.1	ND	U	g	0.1	ND	U	g
Hexachlorobenzene	0.03		0.1	ND	U	g	0.1	ND	U	g
Pentachlorophenol	0.03		0.13	ND	U	g	0.15	ND	U	g
Phenanthrene	0.03		0.1	ND	U	g	0.2	ND	U	g
Anthracene	0.04		0.2	ND	U	g	0.2	ND	U	g
di-n-butyl Phthalate	0.06		0.2	ND	U	g	0.3	ND	U	g
Fluoranthene	0.03		0.1	ND	U	g	0.2	ND	U	g
Pyrene	0.03		0.1	ND	U	g	0.1	ND	U	g
Butylbenzylphthalate	0.02		0.1	ND	U	g	0.1	ND	U	g
3,3'-Dichlorobenzidine	0.06		0.2	ND	U	g	0.3	ND	U	g
Benzo(a)anthracene	0.04		0.2	ND	U	g	0.2	ND	U	g
bis(2-Ethylhexyl) Phthalate	0.04		0.2	ND	U	g	0.2	ND	U	g
Chrysene	0.05		0.2	ND	U	g	0.2	ND	U	g
di-n-Octylphthalate	0.02		0.1	ND	U	g	0.1	ND	U	g
Benzo(b)fluoranthene	0.04		0.2	ND	U	g	0.2	ND	U	g
Benzo(k)fluoranthene	0.07		0.3	ND	U	g	0.3	ND	U	g
Benzo(a)pyrene	0.04		0.2	ND	U	g	0.2	ND	U	g
Indeno(1,2,3-c,d)pyrene	0.03		0.1	ND	U	g	0.1	ND	U	g
Dibenzo(a,h)anthracene	0.02		0.1	ND	U	g	0.1	ND	U	g
Benzo(g,h,i)perylene	0.03		0.1	ND	U	g	0.1	ND	U	g

ANALYTICAL DATA SUMMARY
AOC5-SMALL DAY TANKS

Base: Kotzebue LRRS						Table 2.1								
Site: AOC5						Analytical Data Summary								
Extraction Method: EPA Method 3550						Method AK102								
Analytical Method: Method AK102														
Matrix: Soil														
Units: mg/kg														
			Environmental Samples											
		Field ID:		AOC5-SB1-2.5				AOC5-SB1-2.5DL				AOC5-SS1		
		Batch ID:		H569				H569				H569		
Parameters	MDL		PQL	Result	Validity	Comments	PQL	Result	Validity	Comments	PQL	Result	Validity	Comments
								Dilution 100						
Diesel Hydrocarbons	0.9		3.1	S*	NA	NA	310	8900	J	c,k	3.3	120	J	c,k
* No value reported due to saturation of the detector.														

Base: Kotzebue LRRS						Table 2.1								
Site: AOC5						Analytical Data Summary								
Extraction Method: EPA Method 3550						Method AK102								
Analytical Method: Method AK102														
Matrix: Soil														
Units: mg/kg														
			Environmental Samples											
		Field ID:		AOC5-SS1 DUP				AOC5-SB1-2.5 DUP						
		Batch ID:		H569				H569						
Parameters	MDL		PQL	Result	Validity	Comments	PQL	Result	Validity	Comments				
								Dilution 100						
Diesel Hydrocarbons	0.9		3.3	170	J	c,k	310	10000	J	c,k				

Base: Kotzebue LRRS						Table 2.1								
Site: AOC5						Analytical Data Summary								
Extraction Method: EPA Method 3550						Method AK102								
Analytical Method: Method AK102														
Matrix: Soil														
Units: mg/kg														
			Environmental Samples											
		Field ID:	AOC05-SB10-1.0				AOC05-SB10-1.0DL				AOC05-SB11-2.5			
		Batch ID:		H574				H574				H574		
Parameters	MDL		PQL	Result	Validity	Comments	PQL	Result	Validity	Comments	PQL	Result	Validity	Comments
								Dilution 100						
Diesel Hydrocarbons	0.9		3.4	S*	NA	NA	340	17000	J	b,k	3.6	S*	NA	NA
* No value reported due to saturation of the detector.														

Base: Kotzebue LRRS						Table 2.1								
Site: AOC5						Analytical Data Summary								
Extraction Method: EPA Method 3550						Method AK102								
Analytical Method: Method AK102														
Matrix: Soil														
Units: mg/kg														
			Environmental Samples											
		Field ID:	AOC05-SB11-2.5DL					AOC05-SB2-2.0				AOC05-SB2-2.0DL		
		Batch ID:		H574				H574				H574		
Parameters	MDL		PQL	Result	Validity	Comments	PQL	Result	Validity	Comments	PQL	Result	Validity	Comments
				Dilution 100								Dilution 20		
Diesel Hydrocarbons	0.9		360	23000		g	3.0	3800 E**	J	n	59	3700		g
** Analyte detected above linear calibration range.														

Base: Kotzebue LRRS						Table 2.1								
Site: AOC5						Analytical Data Summary								
Extraction Method: EPA Method 3550						Method AK102								
Analytical Method: Method AK102														
Matrix: Soil														
Units: mg/kg														
			Environmental Samples											
		Field ID:		AOC05-SB3-2.0				AOC05-SB3-2.0DL				AOC05-SB4-2.0		
		Batch ID:		H574				H574				H574		
Parameters	MDL		PQL	Result	Validity	Comments	PQL	Result	Validity	Comments	PQL	Result	Validity	Comments
								Dilution 100						
Diesel Hydrocarbons	0.9		3.2	S*	NA	NA	320	17000		g	3.0	S*	NA	NA
* No value reported due to saturation of the detector.														

Base: Kotzebue LRRS						Table 2.1								
Site: AOC5						Analytical Data Summary								
Extraction Method: EPA Method 3550						Method AK102								
Analytical Method: Method AK102														
Matrix: Soil														
Units: mg/kg														
			Environmental Samples											
		Field ID:	AOC05-SB4-2.0DL					AOC05-SB5-2.0				AOC05-SB5-2.0DL		
		Batch ID:		H574				H574				H574		
Parameters	MDL		PQL	Result	Validity	Comments	PQL	Result	Validity	Comments	PQL	Result	Validity	Comments
				Dilution 100								Dilution 50		
Diesel Hydrocarbons	0.9		300	9400		g	3.3	4600 E**	J	n	170	5000		g
** Analyte detected above linear calibration range.														

Base: Kotzebue LRRS						Table 2.1								
Site: AOC5						Analytical Data Summary								
Extraction Method: EPA Method 3550						Method AK102								
Analytical Method: Method AK102														
Matrix: Soil														
Units: mg/kg														
			Environmental Samples											
		Field ID:		AOC05-SB6-1.0				AOC05-SB6-1.0DL				AOC05-SB7-1.0		
		Batch ID:		H574				H574				H574		
Parameters	MDL		PQL	Result	Validity	Comments	PQL	Result	Validity	Comments	PQL	Result	Validity	Comments
								Dilution 100						
Diesel Hydrocarbons	0.9		3.3	S*	NA	NA	330	12000		g	3.0	S*	NA	NA
* No value reported due to saturation of the detector.														

Base: Kotzebue LRRS						Table 2.1								
Site: AOC5						Analytical Data Summary								
Extraction Method: EPA Method 3550						Method AK102								
Analytical Method: Method AK102														
Matrix: Soil														
Units: mg/kg														
			Environmental Samples											
		Field ID:	AOC05-SB7-1.0DL					AOC05-SB8-1.0				AOC05-SB8-1.0DL		
		Batch ID:		H574				H574				H574		
Parameters	MDL		PQL	Result	Validity	Comments	PQL	Result	Validity	Comments	PQL	Result	Validity	Comments
				Dilution 100								Dilution 100		
Diesel Hydrocarbons	0.9		300	9600		g	3.5	S*	NA	NA	350	14000		g
* No vaule reported due to saturation of the detector.														

Base: Kotzebue LRRS						Table 2.1							
Site: AOC5						Analytical Data Summary							
Extraction Method: EPA Method 3550						Method AK102							
Analytical Method: Method AK102													
Matrix: Soil													
Units: mg/kg													
			Environmental Samples										
		Field ID:		AOC05-SB9-1.5				AOC05-SB9-1.5DL					
		Batch ID:		H574				H574					
Parameters	MDL		PQL	Result	Validity	Comments	PQL	Result	Validity	Comments			
								Dilution 100					
Diesel Hydrocarbons	0.9		3.1	6000 E**	J	n	310	6400		g			
** Analyte detected above linear calibration range.													

Base: Kotzebue LRRS						Table 2.1							
Site: AOC5						Analytical Data Summary							
Extraction Method: EPA Method 3550						Method AK102							
Analytical Method: Method AK102													
Matrix: Soil													
Units: mg/kg													
			Environmental Samples										
		Field ID:	AOC-05-SB11-1.0				AOC-05-SB11-1.0DL						
		Batch ID:		H615				H615					
Parameters	MDL		PQL	Result	Validity	Comments	PQL	Result	Validity	Comments			
								Dilution 10					
Diesel Hydrocarbons	0.9		3.2	1000 E**	J	k,n	32	990		k			
** Analyte detected above linear calibration range.													

Base: Kotzebue LRRS						Table 2.1								
Site: AOC5						Analytical Data Summary								
Extraction Method: EPA Method 3550						Method AK102								
Analytical Method: Method AK102														
Matrix: Soil														
Units: mg/kg														
			Environmental Samples											
		Field ID:		AOC5-SB12-2.2				AOC5-SB12-2.2DL				AOC5-SB13-2.5		
		Batch ID:		H834				H834				H834		
Parameters	MDL		PQL	Result	Validity	Comments	PQL	Result	Validity	Comments	PQL	Result	Validity	Comments
								Dilution 10						
Diesel Hydrocarbons	0.9		6.9	5700 E**	J	n	69	5800		g	8.0	190		g
** Analyte detected above linear calibration range.														

Base: Kotzebue LRRS						Table 2.1								
Site: AOC5						Analytical Data Summary								
Extraction Method: EPA Method 3550						Method AK102								
Analytical Method: Method AK102														
Matrix: Soil														
Units: mg/kg														
			Environmental Samples											
		Field ID:		AOC5-SB14-2.5				AOC5-SB15-3.5				AOC5-SB15-3.5DL		
		Batch ID:		H834				H834				H834		
Parameters	MDL		PQL	Result	Validity	Comments	PQL	Result	Validity	Comments	PQL	Result	Validity	Comments
												Dilution 10		
Diesel Hydrocarbons	0.9		8.5	96		g	7.8	2300 E**	J	n	78	2000		g
** Analyte detected above linear calibration range.														

Base: Kotzebue LRRS						Table 2.1							
Site: AOC5						Analytical Data Summary							
Extraction Method: EPA Method 3550						Method AK102							
Analytical Method: Method AK102													
Matrix: Soil													
Units: mg/kg													
			Environmental Samples										
		Field ID:		AOC5-SB16-2.0									
		Batch ID:		H834									
Parameters	MDL		PQL	Result	Validity	Comments							
Diesel Hydrocarbons	0.9		7.5	2400		g							

Base: Kotzebue LRRS						Table 2.1							
Site: AOC5						Analytical Data Summary							
Extraction Method: EPA Method 3550						Method AK102							
Analytical Method: Method AK102													
Matrix: Soil													
Units: mg/kg													
			Environmental Samples										
		Field ID:		AOC5-SB17-1.2			AOC5-SB17-1.2DL				AOC5-SB18-1.0		
		Batch ID:		H859			H859				H859		
Parameters	MDL		PQL	Result	Validity	Comments	PQL	Result	Validity	Comments	PQL	Result	Validity	Comments
								Dilution 10						
Diesel Hydrocarbons	0.9		20	4600 E**	J	n	200	4800		g	9.6	210		g
** Analyte detected above linear calibration range.														

Base: Kotzebue LRRS				Table 2.1										
Site: AOC5				Analytical Data Summary										
Extraction Method: EPA Method 3550				Method AK102										
Analytical Method: Method AK102														
Matrix: Soil														
Units: mg/kg														
			Environmental Samples											
		Field ID:		AOC5-SB19-2.5				AOC5-SB20-1.0						
		Batch ID:		H859				H859						
Parameters	MDL		PQL	Result	Validity	Comments	PQL	Result	Validity	Comments				
Diesel Hydrocarbons	0.9		11	330		g	10	250		g				

Base: Kotzebue LRRS						Table 2.1								
Site: AOC5						Analytical Data Summary								
Extraction Method: EPA Method 3550						Method AK102								
Analytical Method: Method AK102														
Matrix: Soil														
Units: mg/kg														
			Environmental Samples											
		Field ID:		AOC5-SB21-1.0				AOC5-SB22-1.5				AOC5-SB22-1.5DL		
		Batch ID:		H886				H886				H886		
Parameters	MDL		PQL	Result	Validity	Comments	PQL	Result	Validity	Comments	PQL	Result	Validity	Comments
												Dilution 10		
Diesel Hydrocarbons	0.9		7.7	ND	U	g	7.9	7100 E**	J	n	79	7000		g
** Analyte detected above linear calibration range.														

Base: Kotzebue LRRS						Table 2.1								
Site: AOC5						Analytical Data Summary								
Extraction Method: EPA Method 3550						Method AK102								
Analytical Method: Method AK102														
Matrix: Soil														
Units: mg/kg														
			Environmental Samples											
		Field ID:		AOC5-SB23-3.0				AOC5-SB23-3.0DL				AOC5-SB24-2.75		
		Batch ID:		H886				H886				H886		
Parameters	MDL		PQL	Result	Validity	Comments	PQL	Result	Validity	Comments	PQL	Result	Validity	Comments
								Dilution 100						
Diesel Hydrocarbons	0.9		8.1	S*	NA	NA	810	16000		g	7.8	S*	NA	NA
* No value reported due to saturation of the detector.														

Base: Kotzebue LRRS						Table 2.1							
Site: AOC5						Analytical Data Summary							
Extraction Method: EPA Method 3550						Method AK102							
Analytical Method: Method AK102													
Matrix: Soil													
Units: mg/kg													
			Environmental Samples										
		Field ID:	AOC5-SB24-2.75DL										
		Batch ID:		H886									
Parameters	MDL		PQL	Result	Validity	Comments							
				Dilution 100									
Diesel Hydrocarbons	0.9		780	16000		g							

Base: Kotzebue LRRS						Table 2.1							
Site: AOC5						Analytical Data Summary							
Extraction Method: EPA Method 3550						Method AK102							
Analytical Method: Method AK102													
Matrix: Soil													
Units: mg/kg													
			Environmental Samples										
		Field ID:		AOC5-SB25-3.5									
		Batch ID:		H909									
Parameters	MDL		PQL	Result	Validity	Comments							
Diesel Hydrocarbons	0.9		7.4	140		g							

Base: Kotzebue LRRS							Table 2.2								
Site: AOC5							Analytical Data Summary								
Extraction Method: EPA Method 3550							EPA Method 8081								
Analytical Method: EPA Method 8081															
Matrix: Soil															
Units: mg/kg															
				Environmental Samples											
			Field ID:		AOC5-SB1-2.5		AOC5-SB1-2.5				AOC5-SS1		AOC5-SS1		
			Batch ID:		H569		H569				H569		H569		
	DB-5	DB-608		DB-5	DB-5	DB-608	DB-608			DB-5	DB-5	DB-608	DB-608		
Parameters	MDL	MDL		PQL	Result	PQL	Result	Validity	Comments	PQL	Result	PQL	Result	Validity	Comments
alpha BHC	0.0001	0.0001		0.00022	0.0012	0.00020	0.0016		g	0.00024	ND	0.00021	ND	U	g
beta BHC	0.0001	0.0001		0.00033	ND	0.00031	ND	U	g	0.00036	0.0015	0.00033	ND	U	h
delta BHC	0.0001	0.0001		0.00034	0.0074	0.00026	0.0018	J	n	0.00037	ND	0.00028	ND	U	g
gamma BHC (Lindane)	0.0001	0.0001		0.00027	0.0010	0.00022	0.0012		g	0.00029	0.0014	0.00024	ND	U	h
Heptachlor	0.0001	0.0001		0.0003	0.0001	0.0003	0.0022	J	n	0.0003	ND	0.0003	ND	U	g
Aldrin	0.0001	0.0001		0.00022	ND	0.00028	ND	U	g	0.00023	ND	0.00030	ND	U	g
Heptachlor Epoxide	0.0001	0.0001		0.00027	0.054	0.00034	0.00098	J	k,n	0.00029	0.0060	0.00037	ND	U	h,k
Endosulfan I	0.0001	0.0001		0.00040	ND	0.00040	ND	U	g	0.00042	ND	0.00042	ND	U	g
Dieldrin	0.0001	0.0002		0.0004	ND	0.0005	ND	U	g	0.0005	ND	0.0006	ND	U	g
4,4'-DDE	0.0001	0.0002		0.0003	0.0054	0.0005	0.0045		g	0.0004	0.0062	0.0006	0.0054		g
Endrin	0.0001	0.0001		0.0003	0.0012	0.0004	0.0015		g	0.0004	0.0020	0.0004	0.0025		g
Endosulfan II	0.0002	0.0002		0.0006	ND	0.0006	ND	U	g	0.0006	ND	0.0006	ND	U	g
4,4'-DDD	0.0001	0.0002		0.0004	0.037	0.0005	0.036		g	0.0005	0.30 E*	0.0005	0.30 E*	J	n
Endosulfan Sulfate	0.0002	0.0002		0.0009	ND	0.0009	ND	U	g	0.0009	ND	0.0009	ND	U	g
4,4'-DDT	0.0002	0.0001		0.0008	0.0009	0.0005	0.0013		g	0.0009	0.11 E*	0.0005	0.10 E*	J	n
Methoxychlor	0.0008	0.0011		0.0030	ND	0.0038	ND	U	g	0.0032	ND	0.0040	ND	U	g
Endrin Aldehyde	0.0002	0.0003		0.0008	ND	0.0009	ND	U	g	0.0008	ND	0.0010	ND	U	g
gamma-Chlordane	0.0001	0.0001		0.00019	0.0013	0.00028	ND	U	h	0.00020	0.00058	0.00030	0.0012	J	n
alpha-Chlordane	0.0001	0.0001		0.00022	0.0013	0.00040	0.00091		g	0.00024	0.0010	0.00042	0.00016	J	n
Toxaphene	0.007	0.009		0.03	ND	0.03	ND	U	g	0.03	ND	0.03	ND	U	g
Arochlor 1016	0.007	0.009		0.03	ND	0.03	ND	U	g	0.03	ND	0.03	ND	U	g
Arochlor 1242	0.009	0.010		0.02	ND	0.03	ND	U	g	0.02	ND	0.03	ND	U	g
Arochlor 1248	0.004	0.009		0.01	ND	0.02	ND	U	g	0.01	ND	0.02	ND	U	g
Arochlor 1254	0.011	0.0008		0.04	ND	0.03	ND	U	g	0.04	ND	0.03	ND	U	g
Arochlor 1260	0.009	0.005		0.03	ND	0.02	ND	U	g	0.03	ND	0.02	ND	U	g
Arochlor 1221	0.011	0.01		0.04	ND	0.03	ND	U	g	0.04	ND	0.04	ND	U	g
Arochlor 1232	0.005	0.005		0.02	ND	0.00	ND	U	g	0.02	ND	0.00	ND	U	g

* Analyte detected above linear calibration range.

Base: Kotzebue LRRS							Table 2.2							
Site: AOC5							Analytical Data Summary							
Extraction Method: EPA Method 3550							EPA Method 8081							
Analytical Method: EPA Method 8081														
Matrix: Soil														
Units: mg/kg														
				Environmental Samples										
			Field ID:		AOC5-SS1DL		AOC5-SS1DL							
			Batch ID:		H569		H569							
	DB-5	DB-608		DB-5	DB-5	DB-608	DB-608							
Parameters	MDL	MDL		PQL	Result	PQL	Result	Validity	Comments					
					Dilution 10		Dilution 10							
alpha BHC	0.0001	0.0001		0.0024	ND	0.0021	ND	U	g					
beta BHC	0.0001	0.0001		0.0036	0.014	0.0033	ND	U	h					
delta BHC	0.0001	0.0001		0.0037	ND	0.0027	ND	U	g					
gamma BHC (Lindane)	0.0001	0.0001		0.0029	ND	0.0024	ND	U	g					
Heptachlor	0.0001	0.0001		0.0033	ND	0.0033	ND	U	g					
Aldrin	0.0001	0.0001		0.0023	0.0070	0.0030	ND	U	h					
Heptachlor Epoxide	0.0001	0.0001		0.0029	0.0093	0.0037	ND	U	h,k					
Endosulfan I	0.0001	0.0001		0.0042	ND	0.0042	ND	U	g					
Dieldrin	0.0001	0.0002		0.0045	ND	0.0056	ND	U	g					
4,4'-DDE	0.0001	0.0002		0.0037	0.023	0.0056	0.017		g					
Endrin	0.0001	0.0001		0.0037	0.0023	0.0038	ND	U	h					
Endosulfan II	0.0002	0.0002		0.0061	ND	0.0059	ND	U	g					
4,4'-DDD	0.0001	0.0002		0.0045	0.23	0.0054	0.23		g					
Endosulfan Sulfate	0.0002	0.0002		0.0092	ND	0.0092	ND	U	g					
4,4'-DDT	0.0002	0.0001		0.0086	0.10	0.0049	0.10		g					
Methoxychlor	0.0008	0.0011		0.032	ND	0.040	ND	U	g					
Endrin Aldehyde	0.0002	0.0003		0.0084	ND	0.0098	ND	U	g					
gamma-Chlordane	0.0001	0.0001		0.0020	ND	0.0030	ND	U	g					
alpha-Chlordane	0.0001	0.0001		0.0024	ND	0.0042	ND	U	g					
Toxaphene	0.007	0.009		0.28	ND	0.34	ND	U	g					
Arochlor 1016	0.007	0.009		0.33	ND	0.32	ND	U	g					
Arochlor 1242	0.009	0.010		0.20	ND	0.28	ND	U	g					
Arochlor 1248	0.004	0.009		0.13	ND	0.18	ND	U	g					
Arochlor 1254	0.011	0.0008		0.40	ND	0.34	ND	U	g					
Arochlor 1260	0.009	0.005		0.32	ND	0.17	ND	U	g					
Arochlor 1221	0.011	0.01		0.39	ND	0.35	ND	U	g					
Arochlor 1232	0.005	0.005		0.17	ND	0.02	ND	U	g					

Base: Kotzebue LRRS						Table 2.2									
Site: AOC5						Analytical Data Summary									
Extraction Method: EPA Method 3550						EPA Method 8081									
Analytical Method: EPA Method 8081															
Matrix: Soil															
Units: mg/kg															
				Environmental Samples											
			Field ID:		AOC05-SB10-1.0		AOC05-SB10-1.0				AOC05-SB10-1.0DL		AOC05-SB10-1.0DL		
			Batch ID:		H574		H574				H574		H574		
	DB-5	DB-608		DB-5	DB-5	DB-608	DB-608			DB-5	DB-5	DB-608	DB-608		
Parameters	MDL	MDL		PQL	Result	PQL	Result	Validity	Comments	PQL	Result	PQL	Result	Validity	Comments
											Dilution 20		Dilution 20		
alpha BHC	0.0001	0.0001		0.00024	0.0021	0.00021	0.013	J	n	0.0048	ND	0.0043	ND	U	g
beta BHC	0.0001	0.0001		0.00036	ND	0.00034	ND	U	g	0.0073	0.014	0.0068	ND	U	h
delta BHC	0.0001	0.0001		0.00037	0.20	0.00028	0.0045	J	n	0.0075	0.33	0.0056	ND	U	h
gamma BHC (Lindane)	0.0001	0.0001		0.00030	0.0019	0.00024	ND	U	h	0.0059	ND	0.0049	ND	U	g
Heptachlor	0.0001	0.0001		0.0003	0.0014	0.0003	ND	U	h	0.0067	ND	0.0067	ND	U	g
Aldrin	0.0001	0.0001		0.00024	ND	0.00030	ND	U	g	0.0047	0.016	0.0061	ND	U	h
Heptachlor Epoxide	0.0001	0.0001		0.00030	0.85	0.00037	ND	U	h,k	0.0059	4.9	0.0075	ND	U	h,k
Endosulfan I	0.0001	0.0001		0.00043	ND	0.00043	ND	U	g	0.0086	ND	0.0086	ND	U	g
Dieldrin	0.0001	0.0002		0.0005	0.0016	0.0006	0.0068	J	n	0.0092	ND	0.011	ND	U	g
4,4'-DDE	0.0001	0.0002		0.0004	0.024	0.0006	0.029		g	0.0076	0.058	0.011	0.060		g
Endrin	0.0001	0.0001		0.0004	0.0039	0.0004	ND	U	h	0.0075	0.0047	0.0078	ND	U	h
Endosulfan II	0.0002	0.0002		0.0006	ND	0.0006	ND	U	g	0.012	ND	0.012	ND	U	g
4,4'-DDD	0.0001	0.0002		0.0005	0.40 E*	0.0005	0.38 E*	J	n	0.0092	0.24	0.011	0.23		k
Endosulfan Sulfate	0.0002	0.0002		0.0009	ND	0.0009	ND	U	g	0.019	ND	0.019	ND	U	g
4,4'-DDT	0.0002	0.0001		0.0009	0.015	0.0005	0.0079	J	n	0.017	0.024	0.010	0.013	J	n
Methoxychlor	0.0008	0.0011		0.0033	ND	0.0041	ND	U	g	0.065	ND	0.082	ND	U	g
Endrin Aldehyde	0.0002	0.0003		0.0008	0.0004	0.0010	0.0039	J	n	0.017	ND	0.020	ND	U	g
gamma-Chlordane	0.0001	0.0001		0.00020	ND	0.00030	ND	U	g	0.0041	ND	0.0061	ND	U	g
alpha-Chlordane	0.0001	0.0001		0.00024	0.00099	0.00043	ND	U	h	0.0048	ND	0.0086	ND	U	g
Toxaphene	0.007	0.009		0.03	ND	0.03	ND	U	g	0.56	ND	0.69	ND	U	g
Arochlor 1016	0.007	0.009		0.03	ND	0.03	ND	U	g	0.67	ND	0.65	ND	U	g
Arochlor 1242	0.009	0.010		0.02	ND	0.03	ND	U	g	0.41	ND	0.58	ND	U	g
Arochlor 1248	0.004	0.009		0.01	ND	0.02	ND	U	g	0.27	ND	0.36	ND	U	g
Arochlor 1254	0.011	0.0008		0.04	ND	0.03	ND	U	g	0.81	ND	0.69	ND	U	g
Arochlor 1260	0.009	0.005		0.03	ND	0.02	ND	U	g	0.66	ND	0.35	ND	U	g
Arochlor 1221	0.011	0.01		0.04	ND	0.04	ND	U	g	0.80	ND	0.72	ND	U	g
Arochlor 1232	0.005	0.005		0.02	ND	0.00	ND	U	g	0.35	ND	0.03	ND	U	g
* Analyte detected above linear calibration range.															

Base: Kotzebue LRRS
Site: AOC5
Extraction Method: EPA Method 3550
Analytical Method: EPA Method 8081
Matrix: Soil
Units: mg/kg

Table 2.2
Analytical Data Summary
EPA Method 8081

			Environmental Samples												
			Field ID:	AOC05-SB11-2.5		AOC05-SB11-2.5				AOC05-SB11-2.5DL		AOC05-SB11-2.5DL			
			Batch ID:		H574		H574				H574		H574		
	DB-5	DB-608		DB-5	DB-5	DB-608	DB-608			DB-5	DB-5	DB-608	DB-608		
Parameters	MDL	MDL		PQL	Result	PQL	Result	Validity	Comments	PQL	Result	PQL	Result	Validity	Comments
											Dilution 10		Dilution 10		
alpha BHC	0.0001	0.0001		0.00026	0.0030	0.00023	0.0047	J	n	0.0026	ND	0.0023	ND	U	g
beta BHC	0.0001	0.0001		0.00039	ND	0.00036	ND	U	g	0.0039	ND	0.0036	ND	U	g
delta BHC	0.0001	0.0001		0.00040	0.19	0.00030	0.0066	J	n	0.0040	0.28	0.0030	0.021	J	n
gamma BHC (Lindane)	0.0001	0.0001		0.00032	0.0017	0.00026	0.017	J	n	0.0032	ND	0.0026	ND	U	g
Heptachlor	0.0001	0.0001		0.0004	0.0013	0.0004	0.0014	J	n	0.0036	ND	0.0036	ND	U	g
Aldrin	0.0001	0.0001		0.00025	ND	0.00032	ND	U	g	0.0025	ND	0.0032	ND	U	g
Heptachlor Epoxide	0.0001	0.0001		0.00032	0.71	0.00040	ND	U	h,k	0.0032	4.4	0.0040	ND	U	h,k
Endosulfan I	0.0001	0.0001		0.00046	ND	0.00046	ND	U	g	0.0046	ND	0.0046	ND	U	g
Dieldrin	0.0001	0.0002		0.0005	0.0015	0.0006	0.0074	J	n	0.0049	ND	0.0061	ND	U	g
4,4'-DDE	0.0001	0.0002		0.0004	0.016	0.0006	0.018	U	g	0.0041	0.036	0.0061	0.029		g
Endrin	0.0001	0.0001		0.0004	0.0044	0.0004	0.0016	J	n	0.0040	0.0055	0.00	ND	U	h
Endosulfan II	0.0002	0.0002		0.0007	ND	0.0006	ND	U	g	0.0066	ND	0.0064	ND	U	g
4,4'-DDD	0.0001	0.0002		0.0005	0.24 E*	0.0006	0.22 E*	J	k,n	0.0049	0.18	0.0058	0.18		k
Endosulfan Sulfate	0.0002	0.0002		0.0010	ND	0.0010	ND	U	g	0.010	ND	0.010	ND	U	g
4,4'-DDT	0.0002	0.0001		0.0009	0.018	0.0005	0.0021	J	n	0.0094	0.012	0.0054	0.0047	J	n
Methoxychlor	0.0008	0.0011		0.0035	0.0056	0.0044	0.0025	J	n	0.035	ND	0.044	ND	U	g
Endrin Aldehyde	0.0002	0.0003		0.0009	0.0021	0.0011	0.0058	J	n	0.0091	ND	0.011	ND	U	g
gamma-Chlordane	0.0001	0.0001		0.00022	ND	0.00032	ND	U	g	0.0022	ND	0.0032	ND	U	g
alpha-Chlordane	0.0001	0.0001		0.00026	0.0011	0.00046	0.00030	J	n	0.0026	ND	0.0046	ND	U	g
Toxaphene	0.007	0.009		0.03	ND	0.04	ND	U	g	0.30	ND	0.37	ND	U	g
Arochlor 1016	0.007	0.009		0.04	ND	0.03	ND	U	g	0.36	ND	0.35	ND	U	g
Arochlor 1242	0.009	0.010		0.02	ND	0.03	ND	U	g	0.22	ND	0.31	ND	U	g
Arochlor 1248	0.004	0.009		0.01	ND	0.02	ND	U	g	0.14	ND	0.19	ND	U	g
Arochlor 1254	0.011	0.0008		0.04	ND	0.04	ND	U	g	0.43	ND	0.37	ND	U	g
Arochlor 1260	0.009	0.005		0.04	ND	0.02	ND	U	g	0.35	ND	0.19	ND	U	g
Arochlor 1221	0.011	0.01		0.04	ND	0.04	ND	U	g	0.43	ND	0.39	ND	U	g
Arochlor 1232	0.005	0.005		0.02	ND	0.00	ND	U	g	0.19	ND	0.02	ND	U	g

* Analyte detected above linear calibration range.

Base: Kotzebue LRRS						Table 2.2								
Site: AOC5						Analytical Data Summary								
Extraction Method: EPA Method 3550						EPA Method 8081								
Analytical Method: EPA Method 8081														
Matrix: Soil														
Units: mg/kg														
				Environmental Samples										
			Field ID:		AOC05-SB2-2.0		AOC05-SB2-2.0			AOC05-SB2-2.0DL		AOC05-SB2-2.0DL		
			Batch ID:		H574		H574				H574		H574	
	DB-5	DB-608		DB-5	DB-5	DB-608	DB-608			DB-5	DB-5	DB-608	DB-608	
Parameters	MDL	MDL		PQL	Result	PQL	Result	Validity	Comments	PQL	Result Dilution 10	PQL	Result Dilution 10	Validity	Comments
alpha BHC	0.0001	0.0001		0.00021	ND	0.00019	ND	U	g	0.0021	ND	0.0019	ND	U	g
beta BHC	0.0001	0.0001		0.00032	0.0021	0.00030	ND	U	h	0.0032	ND	0.0030	ND	U	g
delta BHC	0.0001	0.0001		0.00033	0.0045	0.00025	0.0015	J	n	0.0033	0.016	0.0025	0.014	J	n
gamma BHC (Lindane)	0.0001	0.0001		0.00026	0.00091	0.00022	0.00087		g	0.0026	ND	0.0022	ND	U	g
Heptachlor	0.0001	0.0001		0.0003	ND	0.0003	ND	U	g	0.0030	ND	0.0029	ND	U	g
Aldrin	0.0001	0.0001		0.00021	ND	0.00027	ND	U	g	0.0021	ND	0.0027	ND	U	g
Heptachlor Epoxide	0.0001	0.0001		0.00026	0.020	0.00033	ND	U	h,k	0.0026	0.021	0.0033	ND	U	h,k
Endosulfan I	0.0001	0.0001		0.00038	ND	0.00038	ND	U	g	0.0038	ND	0.0038	ND	U	g
Dieldrin	0.0001	0.0002		0.0004	ND	0.0005	ND	U	g	0.0041	ND	0.0050	ND	U	g
4,4'-DDE	0.0001	0.0002		0.0003	0.0076	0.0005	0.0071		g	0.0034	0.026	0.0050	0.018		g
Endrin	0.0001	0.0001		0.0003	0.0009	0.0003	0.0003	J	n	0.0033	ND	0.0035	ND	U	g
Endosulfan II	0.0002	0.0002		0.0005	ND	0.0005	ND	U	g	0.0054	ND	0.0053	ND	U	g
4,4'-DDD	0.0001	0.0002		0.0004	0.12 E*	0.0005	0.12 E*	J	k,n	0.0041	0.097	0.0048	0.089		k
Endosulfan Sulfate	0.0002	0.0002		0.0008	ND	0.0008	ND	U	g	0.0083	ND	0.0083	ND	U	g
4,4'-DDT	0.0002	0.0001		0.0008	0.0085	0.0004	0.0073		g	0.0077	0.019	0.0044	0.0070		g
Methoxychlor	0.0008	0.0011		0.0029	ND	0.0036	ND	U	g	0.029	ND	0.036	ND	U	g
Endrin Aldehyde	0.0002	0.0003		0.0008	ND	0.0009	ND	U	g	0.0075	ND	0.0088	ND	U	g
gamma-Chlordane	0.0001	0.0001		0.00018	0.0013	0.00027	ND	U	h	0.0018	ND	0.0027	ND	U	g
alpha-Chlordane	0.0001	0.0001		0.00021	0.0013	0.00038	ND	U	h	0.0021	ND	0.0038	ND	U	g
Toxaphene	0.007	0.009		0.02	ND	0.03	ND	U	g	0.25	ND	0.30	ND	U	g
Arochlor 1016	0.007	0.009		0.03	ND	0.03	ND	U	g	0.30	ND	0.29	ND	U	g
Arochlor 1242	0.009	0.010		0.02	ND	0.03	ND	U	g	0.18	ND	0.26	ND	U	g
Arochlor 1248	0.004	0.009		0.01	ND	0.02	ND	U	g	0.12	ND	0.16	ND	U	g
Arochlor 1254	0.011	0.0008		0.04	ND	0.03	ND	U	g	0.36	ND	0.31	ND	U	g
Arochlor 1260	0.009	0.005		0.03	ND	0.02	ND	U	g	0.29	ND	0.15	ND	U	g
Arochlor 1221	0.011	0.01		0.04	ND	0.03	ND	U	g	0.35	ND	0.32	ND	U	g
Arochlor 1232	0.005	0.005		0.02	ND	0.00	ND	U	g	0.15	ND	0.02	ND	U	g

* Analyte detected above linear calibration range.

Base: Kotzebue LRRS							Table 2.2							
Site: AOC5							Analytical Data Summary							
Extraction Method: EPA Method 3550							EPA Method 8081							
Analytical Method: EPA Method 8081														
Matrix: Soil														
Units: mg/kg														
				Environmental Samples										
			Field ID:		AOC05-SB3-2.0		AOC05-SB3-2.0				AOC05-SB3-2.0DL		AOC05-SB3-2.0DL	
			Batch ID:		H574		H574				H574		H574	
	DB-5	DB-608		DB-5	DB-5	DB-608	DB-608			DB-5	DB-5	DB-608	DB-608	
Parameters	MDL	MDL		PQL	Result	PQL	Result	Validity	Comments	PQL	Result Dilution 10	PQL	Result Dilution 10	Validity	Comments
alpha BHC	0.0001	0.0001		0.00023	0.0013	0.00020	0.0028	J	n	0.0023	ND	0.0020	ND	U	g
beta BHC	0.0001	0.0001		0.00034	0.0030	0.00032	0.0021	J	n	0.0034	0.0082	0.0032	ND	U	h
delta BHC	0.0001	0.0001		0.00035	0.029	0.00026	0.0018	J	n	0.0035	0.044	0.0026	0.015	J	n
gamma BHC (Lindane)	0.0001	0.0001		0.00028	ND	0.00023	ND	U	g	0.0028	ND	0.0023	ND	U	g
Heptachlor	0.0001	0.0001		0.0003	0.0006	0.00	ND	U	h	0.0032	ND	0.0032	ND	U	g
Aldrin	0.0001	0.0001		0.00022	ND	0.00029	ND	U	g	0.0022	0.0090	0.0029	0.0094	J	n
Heptachlor Epoxide	0.0001	0.0001		0.00028	0.17	0.00035	0.0015	J	k	0.0028	0.47	0.0035	ND	U	h,k
Endosulfan I	0.0001	0.0001		0.00041	ND	0.00041	ND	U	g	0.0041	ND	0.0041	ND	U	g
Dieldrin	0.0001	0.0002		0.0004	ND	0.0005	ND	U	g	0.0044	ND	0.0054	ND	U	g
4,4'-DDE	0.0001	0.0002		0.0004	0.0082	0.0005	0.0083		g	0.0036	0.027	0.0054	0.022		g
Endrin	0.0001	0.0001		0.0004	0.0008	0.0004	0.0024	J	n	0.0036	ND	0.0037	ND	U	g
Endosulfan II	0.0002	0.0002		0.0006	ND	0.0006	ND	U	g	0.0058	ND	0.0057	ND	U	g
4,4'-DDD	0.0001	0.0002		0.0004	0.055	0.0005	0.088		k	0.0044	0.069	0.0052	0.099		k
Endosulfan Sulfate	0.0002	0.0002		0.0009	ND	0.0009	ND	U	g	0.0089	ND	0.0089	ND	U	g
4,4'-DDT	0.0002	0.0001		0.0008	0.19 E*	0.0005	0.17 E*	J	n	0.0083	0.18	0.0047	0.16		g
Methoxychlor	0.0008	0.0011		0.0031	ND	0.0039	ND	U	g	0.031	ND	0.039	ND	U	g
Endrin Aldehyde	0.0002	0.0003		0.0008	ND	0.0009	ND	U	g	0.0080	ND	0.0095	ND	U	g
gamma-Chlordane	0.0001	0.0001		0.00019	0.0015	0.00029	ND	U	h	0.0019	ND	0.0029	ND	U	g
alpha-Chlordane	0.0001	0.0001		0.00023	0.0021	0.00041	ND	U	h	0.0023	0.00075	0.0041	ND	U	h
Toxaphene	0.007	0.009		0.03	ND	0.03	ND	U	g	0.27	ND	0.33	ND	U	g
Arochlor 1016	0.007	0.009		0.03	ND	0.03	ND	U	g	0.32	ND	0.31	ND	U	g
Arochlor 1242	0.009	0.010		0.02	ND	0.03	ND	U	g	0.19	ND	0.27	ND	U	g
Arochlor 1248	0.004	0.009		0.01	ND	0.02	ND	U	g	0.13	ND	0.17	ND	U	g
Arochlor 1254	0.011	0.0008		0.04	ND	0.03	ND	U	g	0.38	ND	0.33	ND	U	g
Arochlor 1260	0.009	0.005		0.03	ND	0.02	ND	U	g	0.31	ND	0.16	ND	U	g
Arochlor 1221	0.011	0.01		0.04	ND	0.03	ND	U	g	0.38	ND	0.34	ND	U	g
Arochlor 1232	0.005	0.005		0.02	ND	0.00	ND	U	g	0.16	ND	0.02	ND	U	g

* Analyte detected above linear calibration range.

Base: Kotzebue LRRS							Table 2.2								
Site: AOC5							Analytical Data Summary								
Extraction Method: EPA Method 3550							EPA Method 8081								
Analytical Method: EPA Method 8081															
Matrix: Soil															
Units: mg/kg															
				Environmental Samples											
			Field ID:		AOC05-SB4-2.0		AOC05-SB4-2.0				AOC05-SB5-2.0		AOC05-SB5-2.0		
			Batch ID:		H574		H574				H574		H574		
	DB-5	DB-608		DB-5	DB-5	DB-608	DB-608			DB-5	DB-5	DB-608	DB-608		
Parameters	MDL	MDL		PQL	Result	PQL	Result	Validity	Comments	PQL	Result	PQL	Result	Validity	Comments
alpha BHC	0.0001	0.0001		0.00022	ND	0.00019	ND	U	g	0.00024	0.0036	0.00021	0.0038	J	n
beta BHC	0.0001	0.0001		0.00033	0.0023	0.00031	ND	U	h	0.00036	0.0025	0.00033	ND	U	h
delta BHC	0.0001	0.0001		0.00034	0.0048	0.00025	ND	U	h	0.00037	ND	0.00028	ND	U	g
gamma BHC (Lindane)	0.0001	0.0001		0.00027	0.0015	0.00022	ND	U	h	0.00029	0.0059	0.00024	ND	U	h
Heptachlor	0.0001	0.0001		0.0003	ND	0.0003	ND	U	g	0.0003	0.0020	0.0003	0.0026	J	n
Aldrin	0.0001	0.0001		0.00021	ND	0.00028	ND	U	g	0.00023	ND	0.00030	ND	U	g
Heptachlor Epoxide	0.0001	0.0001		0.00027	0.024	0.00034	0.00050	J	k,n	0.00029	0.010	0.00037	ND	U	h,k
Endosulfan I	0.0001	0.0001		0.00039	ND	0.00039	ND	U	g	0.00042	ND	0.00042	ND	U	g
Dieldrin	0.0001	0.0002		0.0004	ND	0.0005	ND	U	g	0.0005	ND	0.0006	ND	U	g
4,4'-DDE	0.0001	0.0002		0.0003	0.0024	0.0005	0.0021		g	0.0004	0.0059	0.0006	0.0049		g
Endrin	0.0001	0.0001		0.0003	ND	0.0004	ND	U	g	0.0004	0.0007	0.0004	0.0013	J	n
Endosulfan II	0.0002	0.0002		0.0006	ND	0.0005	ND	U	g	0.0006	ND	0.0006	ND	U	g
4,4'-DDD	0.0001	0.0002		0.0004	0.0066	0.0005	0.0061		k	0.0005	0.012	0.0005	0.027		k
Endosulfan Sulfate	0.0002	0.0002		0.0009	ND	0.0009	ND	U	g	0.0009	ND	0.0009	ND	U	g
4,4'-DDT	0.0002	0.0001		0.0008	0.0057	0.0005	0.0042		g	0.0009	0.12 E*	0.0005	0.11 E*	J	n
Methoxychlor	0.0008	0.0011		0.0030	ND	0.0037	ND	U	g	0.0032	ND	0.0040	ND	U	g
Endrin Aldehyde	0.0002	0.0003		0.0008	ND	0.0009	ND	U	g	0.0008	ND	0.0010	ND	U	g
gamma-Chlordane	0.0001	0.0001		0.00019	0.00064	0.00028	ND	U	h	0.00020	0.0018	0.00030	0.00031	J	n
alpha-Chlordane	0.0001	0.0001		0.00022	0.00072	0.00039	ND	U	h	0.00024	0.0011	0.00042	ND	U	h
Toxaphene	0.007	0.009		0.03	ND	0.03	ND	U	g	0.03	ND	0.03	ND	U	g
Arochlor 1016	0.007	0.009		0.03	ND	0.03	ND	U	g	0.03	ND	0.03	ND	U	g
Arochlor 1242	0.009	0.010		0.02	ND	0.03	ND	U	g	0.02	ND	0.03	ND	U	g
Arochlor 1248	0.004	0.009		0.01	ND	0.02	ND	U	g	0.01	ND	0.02	ND	U	g
Arochlor 1254	0.011	0.0008		0.04	ND	0.03	ND	U	g	0.04	ND	0.03	ND	U	g
Arochlor 1260	0.009	0.005		0.03	ND	0.02	ND	U	g	0.03	ND	0.02	ND	U	g
Arochlor 1221	0.011	0.01		0.04	ND	0.03	ND	U	g	0.04	ND	0.04	ND	U	g
Arochlor 1232	0.005	0.005		0.02	ND	0.00	ND	U	g	0.02	ND	0.00	ND	U	g

* Analyte detected above linear calibration range.

Base: Kotzebue LRRS							Table 2.2									
Site: AOC5							Analytical Data Summary									
Extraction Method: EPA Method 3550							EPA Method 8081									
Analytical Method: EPA Method 8081																
Matrix: Soil																
Units: mg/kg																
				Environmental Samples												
			Field ID:	AOC05-SB5-2.0DL		AOC05-SB5-2.0DL					AOC05-SB6-1.0			AOC05-SB6-1.0		
			Batch ID:		H574		H574				H574			H574		
	DB-5	DB-608		DB-5	DB-5	DB-608	DB-608			DB-5	DB-5	DB-608		DB-608		
Parameters	MDL	MDL		PQL	Result	PQL	Result	Validity	Comments	PQL	Result	PQL		Result	Validity	Comments
					Dilution 10		Dilution 10									
alpha BHC	0.0001	0.0001		0.0024	ND	0.0021	ND	U	g	0.00023	0.0021	0.00021		0.0094	J	n
beta BHC	0.0001	0.0001		0.0036	ND	0.0033	ND	U	g	0.00035	0.0019	0.00033		ND	U	h
delta BHC	0.0001	0.0001		0.0037	ND	0.0027	ND	U	g	0.00036	0.21	0.00027		ND	U	h
gamma BHC (Lindane)	0.0001	0.0001		0.0029	0.013	0.0024	ND	U	h	0.00028	0.0030	0.00024		0.0059	J	n
Heptachlor	0.0001	0.0001		0.0033	ND	0.0033	ND	U	g	0.0003	0.0026	0.00		ND	U	h
Aldrin	0.0001	0.0001		0.0023	ND	0.0030	ND	U	g	0.00023	ND	0.00029		ND	U	g
Heptachlor Epoxide	0.0001	0.0001		0.0029	0.014	0.0037	ND	U	h,k	0.00028	0.82	0.00036		ND	U	h,k
Endosulfan I	0.0001	0.0001		0.0042	ND	0.0042	ND	U	g	0.00042	ND	0.00042		ND	U	g
Dieldrin	0.0001	0.0002		0.0045	ND	0.0056	ND	U	g	0.0004	ND	0.0006		ND	U	g
4,4'-DDE	0.0001	0.0002		0.0037	0.020	0.0056	0.018		g	0.0004	0.018	0.0005		0.025		g
Endrin	0.0001	0.0001		0.0037	ND	0.0038	ND	U	g	0.0004	0.0045	0.0004		0.0029		g
Endosulfan II	0.0002	0.0002		0.0061	0.0054	0.0059	ND	U	h	0.0006	ND	0.0006		ND	U	g
4,4'-DDD	0.0001	0.0002		0.0045	0.018	0.0054	0.028		k	0.0004	0.48 E*	0.0005		0.48 E*	J	k,n
Endosulfan Sulfate	0.0002	0.0002		0.0092	ND	0.0092	ND	U	g	0.0009	ND	0.0009		ND	U	g
4,4'-DDT	0.0002	0.0001		0.0086	0.095	0.0049	0.084		g	0.0008	0.053	0.0005		0.030		g
Methoxychlor	0.0008	0.0011		0.032	ND	0.040	ND	U	g	0.0031	ND	0.0040		ND	U	g
Endrin Aldehyde	0.0002	0.0003		0.0084	ND	0.0098	ND	U	g	0.0008	0.0043	0.00		ND	U	h
gamma-Chlordane	0.0001	0.0001		0.0020	ND	0.0030	ND	U	g	0.00020	0.0027	0.00029		ND	U	h
alpha-Chlordane	0.0001	0.0001		0.0024	ND	0.0042	ND	U	g	0.00023	0.0018	0.00042		ND	U	h
Toxaphene	0.007	0.009		0.28	ND	0.34	ND	U	g	0.03	ND	0.03		ND	U	g
Arochlor 1016	0.007	0.009		0.33	ND	0.32	ND	U	g	0.03	ND	0.03		ND	U	g
Arochlor 1242	0.009	0.010		0.20	ND	0.28	ND	U	g	0.02	ND	0.03		ND	U	g
Arochlor 1248	0.004	0.009		0.13	ND	0.18	ND	U	g	0.01	ND	0.02		ND	U	g
Arochlor 1254	0.011	0.0008		0.40	ND	0.34	ND	U	g	0.04	ND	0.03		ND	U	g
Arochlor 1260	0.009	0.005		0.32	ND	0.17	ND	U	g	0.03	ND	0.02		ND	U	g
Arochlor 1221	0.011	0.01		0.39	ND	0.35	ND	U	g	0.04	ND	0.03		ND	U	g
Arochlor 1232	0.005	0.005		0.17	ND	0.02	ND	U	g	0.02	ND	0.00		ND	U	g
* Analyte detected above linear calibration range.																

Base: Kotzebue LRRS							Table 2.2								
Site: AOC5							Analytical Data Summary								
Extraction Method: EPA Method 3550							EPA Method 8081								
Analytical Method: EPA Method 8081															
Matrix: Soil															
Units: mg/kg															
				Environmental Samples											
			Field ID:	AOC05-SB6-1.0DL		AOC05-SB6-1.0DL					AOC05-SB7-1.0		AOC05-SB7-1.0		
			Batch ID:		H574		H574				H574		H574		
	DB-5	DB-608		DB-5	DB-5	DB-608	DB-608			DB-5	DB-5	DB-608	DB-608		
Parameters	MDL	MDL		PQL	Result	PQL	Result	Validity	Comments	PQL	Result	PQL	Result	Validity	Comments
					Dilution 20		Dilution 20								
alpha BHC	0.0001	0.0001		0.0046	ND	0.0041	ND	U	g	0.00022	ND	0.00019	ND	U	g
beta BHC	0.0001	0.0001		0.0070	ND	0.0065	ND	U	g	0.00033	ND	0.00031	ND	U	g
delta BHC	0.0001	0.0001		0.0072	0.48	0.0054	0.029	J	n	0.00034	0.0021	0.00025	ND	U	h
gamma BHC (Lindane)	0.0001	0.0001		0.0057	ND	0.0047	ND	U	g	0.00027	ND	0.00022	ND	U	g
Heptachlor	0.0001	0.0001		0.0065	ND	0.0064	ND	U	g	0.0003	ND	0.0003	ND	U	g
Aldrin	0.0001	0.0001		0.0045	ND	0.0059	ND	U	g	0.00021	0.0021	0.00028	0.0050	J	n
Heptachlor Epoxide	0.0001	0.0001		0.0057	5.6	0.0072	ND	U	h,k	0.00027	0.0084	0.00034	0.0020	J	k,n
Endosulfan I	0.0001	0.0001		0.0083	ND	0.0083	ND	U	g	0.00039	ND	0.00039	ND	U	g
Dieldrin	0.0001	0.0002		0.0089	ND	0.011	ND	U	g	0.0004	ND	0.0005	ND	U	g
4,4'-DDE	0.0001	0.0002		0.0073	0.052	0.011	0.084		g	0.0003	0.0080	0.0005	0.0076		g
Endrin	0.0001	0.0001		0.0073	ND	0.0076	ND	U	g	0.0003	0.0023	0.0004	0.0008	J	n
Endosulfan II	0.0002	0.0002		0.012	ND	0.012	ND	U	g	0.0006	ND	0.0005	ND	U	g
4,4'-DDD	0.0001	0.0002		0.0089	0.33	0.011	0.32		k	0.0004	0.047	0.0005	0.052		k
Endosulfan Sulfate	0.0002	0.0002		0.018	ND	0.018	ND	U	g	0.0009	ND	0.0009	ND	U	g
4,4'-DDT	0.0002	0.0001		0.017	0.051	0.0097	0.041		g	0.0008	0.038	0.0005	0.033		g
Methoxychlor	0.0008	0.0011		0.063	ND	0.079	ND	U	g	0.0030	ND	0.0037	ND	U	g
Endrin Aldehyde	0.0002	0.0003		0.016	ND	0.019	ND	U	g	0.0008	ND	0.0009	ND	U	g
gamma-Chlordane	0.0001	0.0001		0.0040	ND	0.0059	ND	U	g	0.00019	0.0017	0.00028	ND	U	h
alpha-Chlordane	0.0001	0.0001		0.0046	ND	0.0083	ND	U	g	0.00022	0.0011	0.00039	ND	U	h
Toxaphene	0.007	0.009		0.54	ND	0.67	ND	U	g	0.03	ND	0.03	ND	U	g
Arochlor 1016	0.007	0.009		0.65	ND	0.63	ND	U	g	0.03	ND	0.03	ND	U	g
Arochlor 1242	0.009	0.010		0.39	ND	0.56	ND	U	g	0.02	ND	0.03	ND	U	g
Arochlor 1248	0.004	0.009		0.26	ND	0.35	ND	U	g	0.01	ND	0.02	ND	U	g
Arochlor 1254	0.011	0.0008		0.78	ND	0.67	ND	U	g	0.04	ND	0.03	ND	U	g
Arochlor 1260	0.009	0.005		0.63	ND	0.33	ND	U	g	0.03	ND	0.02	ND	U	g
Arochlor 1221	0.011	0.01		0.77	ND	0.69	ND	U	g	0.04	ND	0.03	ND	U	g
Arochlor 1232	0.005	0.005		0.33	ND	0.03	ND	U	g	0.02	ND	0.00	ND	U	g

Base: Kotzebue LRRS
Site: AOC5
Extraction Method: EPA Method 3550
Analytical Method: EPA Method 8081
Matrix: Soil
Units: mg/kg

Table 2.2
Analytical Data Summary
EPA Method 8081

			Environmental Samples												
			Field ID:	AOC05-SB8-1.0		AOC05-SB8-1.0				AOC05-SB8-1.0DL		AOC05-SB8-1.0DL			
			Batch ID:	H574		H574				H574		H574			
	DB-5	DB-608	DB-5	DB-5	DB-608	DB-608			DB-5	DB-5	DB-608	DB-608			
Parameters	MDL	MDL	PQL	Result	PQL	Result	Validity	Comments	PQL	Result	PQL	Result	Validity	Comments	
				Dilution 50		Dilution 50				Dilution 500		Dilution 500			
alpha BHC	0.0001	0.0001	0.013	ND	0.011	ND	U	g	0.13	ND	0.11	ND	UJ	b	
beta BHC	0.0001	0.0001	0.019	ND	0.018	ND	U	g	0.19	0.21	0.18	ND	U	b,h	
delta BHC	0.0001	0.0001	0.020	0.070	0.015	0.13	J	b,n	0.20	0.89	0.15	ND	U	b,h	
gamma BHC (Lindane)	0.0001	0.0001	0.015	ND	0.013	ND	U	g	0.15	ND	0.13	ND	UJ	b	
Heptachlor	0.0001	0.0001	0.018	ND	0.017	ND	U	g	0.18	ND	0.17	ND	UJ	b	
Aldrin	0.0001	0.0001	0.012	ND	0.016	ND	U	g	0.12	ND	0.16	ND	UJ	b	
Heptachlor Epoxide	0.0001	0.0001	0.015	ND	0.020	ND	U	k	0.15	1.3	0.20	ND	U	b,h,k	
Endosulfan I	0.0001	0.0001	0.022	ND	0.022	ND	U	g	0.22	ND	0.22	ND	UJ	b	
Dieldrin	0.0001	0.0002	0.024	ND	0.030	ND	U	g	0.24	ND	0.30	ND	UJ	b	
4,4'-DDE	0.0001	0.0002	0.020	0.28	0.030	0.30	J	b	0.20	1.2	0.30	0.87	J	b	
Endrin	0.0001	0.0001	0.020	ND	0.020	ND	U	g	0.20	ND	0.20	ND	UJ	b	
Endosulfan II	0.0002	0.0002	0.032	ND	0.031	ND	U	g	0.32	ND	0.31	ND	UJ	b	
4,4'-DDD	0.0001	0.0002	0.024	6.4 E*	0.028	6.7 E*	J	b,k	0.24	6.4	0.28	6.5	J	b,k	
Endosulfan Sulfate	0.0002	0.0002	0.049	ND	0.049	ND	U	g	0.49	ND	0.49	ND	UJ	b	
4,4'-DDT	0.0002	0.0001	0.046	0.53	0.026	0.58	J	b	0.46	0.97	0.26	0.72	J	b	
Methoxychlor	0.0008	0.0011	0.17	ND	0.21	ND	U	g	1.7	ND	2.1	ND	UJ	b	
Endrin Aldehyde	0.0002	0.0003	0.044	ND	0.052	ND	U	g	0.44	ND	0.52	ND	UJ	b	
gamma-Chlordane	0.0001	0.0001	0.011	ND	0.016	ND	U	g	0.11	ND	0.16	ND	UJ	b	
alpha-Chlordane	0.0001	0.0001	0.013	ND	0.023	ND	U	g	0.13	ND	0.23	ND	UJ	b	
Toxaphene	0.007	0.009	1.5	ND	1.8	ND	U	g	15	ND	18	ND	UJ	b	
Arochlor 1016	0.007	0.009	1.8	ND	1.7	ND	U	g	18	ND	17	ND	UJ	b	
Arochlor 1242	0.009	0.010	1.1	ND	1.5	ND	U	g	11	ND	15	ND	UJ	b	
Arochlor 1248	0.004	0.009	0.70	ND	0.94	ND	U	g	7.0	ND	9.4	ND	UJ	b	
Arochlor 1254	0.011	0.0008	2.1	ND	1.8	ND	U	g	21	ND	18	ND	UJ	b	
Arochlor 1260	0.009	0.005	1.7	ND	0.90	ND	U	g	17	ND	9.0	ND	UJ	b	
Arochlor 1221	0.011	0.01	2.1	ND	1.9	ND	U	g	21	ND	19	ND	UJ	b	
Arochlor 1232	0.005	0.005	0.90	ND	0.90	ND	U	g	9.0	ND	0.90	ND	UJ	b	

* Analyte detected above linear calibration range.

Base: Kotzebue LRRS					Table 2.2					
Site: AOC5					Analytical Data Summary					
Extraction Method: EPA Method 3550					EPA Method 8081					
Analytical Method: EPA Method 8081										
Matrix: Soil										
Units: mg/kg										
				Environmental Samples						
			Field ID:		AOC05-SB9-1.5		AOC05-SB9-1.5			
			Batch ID:		H574		H574			
	DB-5	DB-608		DB-5	DB-5	DB-608	DB-608			
Parameters	MDL	MDL		PQL	Result	PQL	Result	Validity	Comments	
alpha BHC	0.0001	0.0001		0.00022	ND	0.00020	ND	U	g	
beta BHC	0.0001	0.0001		0.00033	0.0038	0.00031	0.0022	J	n	
delta BHC	0.0001	0.0001		0.00034	ND	0.00026	ND	U	g	
gamma BHC (Lindane)	0.0001	0.0001		0.00027	0.0013	0.00022	0.0014	J	n	
Heptachlor	0.0001	0.0001		0.0003	0.0011	0.0003	0.0006	J	n	
Aldrin	0.0001	0.0001		0.00022	ND	0.00028	ND	U	g	
Heptachlor Epoxide	0.0001	0.0001		0.00027	0.0022	0.00034	0.00087	J	k,n	
Endosulfan I	0.0001	0.0001		0.00039	ND	0.00039	ND	U	g	
Dieldrin	0.0001	0.0002		0.0004	ND	0.0005	ND	U	g	
4,4'-DDE	0.0001	0.0002		0.0003	0.0024	0.00	ND	U	h	
Endrin	0.0001	0.0001		0.0003	ND	0.0004	ND	U	g	
Endosulfan II	0.0002	0.0002		0.0006	ND	0.0005	ND	U	g	
4,4'-DDD	0.0001	0.0002		0.0004	0.0056	0.0005	0.0079		k	
Endosulfan Sulfate	0.0002	0.0002		0.0009	ND	0.0009	ND	U	g	
4,4'-DDT	0.0002	0.0001		0.0008	0.0041	0.0005	0.0054		g	
Methoxychlor	0.0008	0.0011		0.0030	ND	0.0038	ND	U	g	
Endrin Aldehyde	0.0002	0.0003		0.0008	0.0008	0.0009	0.0012		g	
gamma-Chlordane	0.0001	0.0001		0.00019	0.0014	0.00028	ND	U	h	
alpha-Chlordane	0.0001	0.0001		0.00022	0.0012	0.00040	ND	U	h	
Toxaphene	0.007	0.009		0.03	ND	0.03	ND	U	g	
Arochlor 1016	0.007	0.009		0.03	ND	0.03	ND	U	g	
Arochlor 1242	0.009	0.010		0.02	ND	0.03	ND	U	g	
Arochlor 1248	0.004	0.009		0.01	ND	0.02	ND	U	g	
Arochlor 1254	0.011	0.0008		0.04	ND	0.03	ND	U	g	
Arochlor 1260	0.009	0.005		0.03	ND	0.02	ND	U	g	
Arochlor 1221	0.011	0.01		0.04	ND	0.03	ND	U	g	
Arochlor 1232	0.005	0.005		0.02	ND	0.00	ND	U	g	

Base: Kotzebue LRRS							Table 2.2								
Site: AOC5							Analytical Data Summary								
Extraction Method: EPA Method 3550							EPA Method 8081								
Analytical Method: EPA Method 8081															
Matrix: Soil															
Units: mg/kg															
				Environmental Samples											
			Field ID:	AOC-05-SB11-1.0		AOC-05-SB11-1.0									
			Batch ID:		H615		H615								
	DB-5	DB-608		DB-5	DB-5	DB-608	DB-608								
Parameters	MDL	MDL		PQL	Result	PQL	Result	Validity	Comments						
alpha BHC	0.0001	0.0001		0.00023	0.0058	0.00020	ND	U	h						
beta BHC	0.0001	0.0001		0.00034	0.0055	0.00032	0.0022	J	n						
delta BHC	0.0001	0.0001		0.00035	0.010	0.00026	0.0038	J	n						
gamma BHC (Lindane)	0.0001	0.0001		0.00028	0.0020	0.00023	0.0019	J	n						
Heptachlor	0.0001	0.0001		0.0003	0.0001	0.0003	0.0015	J	n						
Aldrin	0.0001	0.0001		0.00022	ND	0.00028	ND	U	g						
Heptachlor Epoxide	0.0001	0.0001		0.00028	0.099	0.00035	ND	U	a,h						
Endosulfan I	0.0001	0.0001		0.00040	0.0013	0.00040	ND	U	h						
Dieldrin	0.0001	0.0002		0.0004	ND	0.0005	ND	U	g						
4,4'-DDE	0.0001	0.0002		0.0004	0.0037	0.0005	0.0041		g						
Endrin	0.0001	0.0001		0.0004	0.0007	0.0004	0.011	B J	a,n						
Endosulfan II	0.0002	0.0002		0.0006	0.0058	0.00	ND	U	h						
4,4'-DDD	0.0001	0.0002		0.0004	0.016	0.0005	0.021		k						
Endosulfan Sulfate	0.0002	0.0002		0.0009	ND	0.0009	ND	U	g						
4,4'-DDT	0.0002	0.0001		0.0008	0.014	0.0005	0.011		a						
Methoxychlor	0.0008	0.0011		0.0031	0.0023	0.0039	ND	U	h						
Endrin Aldehyde	0.0002	0.0003		0.0008	0.011	0.00	ND	U	h						
gamma-Chlordane	0.0001	0.0001		0.00019	0.0021	0.00028	ND	U	h						
alpha-Chlordane	0.0001	0.0001		0.00023	0.0013	0.00040	0.0018	J	n						
Toxaphene	0.007	0.009		0.03	ND	0.03	ND	U	g						
Arochlor 1016	0.007	0.009		0.03	ND	0.03	ND	U	g						
Arochlor 1242	0.009	0.010		0.02	ND	0.03	ND	U	g						
Arochlor 1248	0.004	0.009		0.01	ND	0.02	ND	U	g						
Arochlor 1254	0.011	0.0008		0.04	ND	0.03	ND	U	g						
Arochlor 1260	0.009	0.005		0.03	ND	0.02	ND	U	g						
Arochlor 1221	0.011	0.01		0.04	ND	0.03	ND	U	g						
Arochlor 1232	0.005	0.005		0.02	ND	0.00	ND	U	g						

Base: Kotzebue LRRS
Site: AOC5
Extraction Method: EPA Method 5030
Analytical Method: EPA Method 8260
Matrix: Soil
Units: mg/kg

Table 12.2.1.3
Analytical Data Summary
EPA Method 8260

			Environmental Samples											
		Field ID:		AOC5-SB1-2.5			AOC5-SB1-2.5RE					AOC5-SS1		
		Batch ID:		H569				H569				H569		
Parameters	MDL		PQL	Result	Validity	Comments	PQL	Result	Validity	Comments	PQL	Result	Validity	Comments
Chloromethane	0.0009		0.026	ND	U	g	0.34	ND	U	g	0.003	ND	U	g
Bromomethane	0.0008		0.024	ND	U	g	0.32	ND	U	g	0.003	ND	U	g
Vinyl Chloride	0.0010		0.028	ND	U	g	0.37	ND	U	g	0.003	ND	U	g
Chloroethane	0.0010		0.030	ND	U	g	0.39	ND	U	g	0.004	ND	U	g
Methylene Chloride	0.0009		0.025	0.030		a	0.33	0.24	B	a	0.003	0.002	B J	a
Acetone	0.0039		0.12	ND	U	k	1.5	0.51	J	k	0.01	0.02	B	k
Carbon Disulfide	0.0005		0.016	ND	U	g	0.21	ND	U	g	0.002	ND	U	g
1,1-Dichloroethene	0.0012		0.034	ND	U	g	0.45	ND	U	g	0.004	ND	U	g
1,1-Dichloroethane	0.0004		0.011	ND	U	g	0.14	ND	U	g	0.001	ND	U	g
trans-1,2-Dichloroethene	0.0009		0.026	ND	U	g	0.34	ND	U	g	0.003	ND	U	g
cis-1,2-Dichloroethene	0.0011		0.033	ND	U	g	0.44	ND	U	g	0.004	ND	U	g
Chloroform	0.0005		0.013	ND	U	k	0.18	ND	U	k	0.002	ND	U	k
1,2-Dichloroethane	0.0005		0.015	ND	U	g	0.19	ND	U	g	0.002	ND	U	g
Methyl Ethyl Ketone (2-butanone)	0.0025		0.072	ND	U	k	0.96	0.46	J	k	0.009	0.013	B	k
1,1,1-Trichloroethane	0.0004		0.013	ND	U	g	0.17	ND	U	g	0.002	ND	U	g
Carbon Tetrachloride	0.0010		0.029	ND	U	g	0.38	ND	U	g	0.004	ND	U	g
Vinyl Acetate	0.0016		0.047	ND	U	g	0.62	ND	U	g	0.006	ND	U	g
Bromodichloromethane	0.0006		0.019	ND	U	g	0.25	ND	U	g	0.002	ND	U	g
1,2-Dichloropropane	0.0008		0.025	ND	U	g	0.32	ND	U	g	0.003	ND	U	g
cis-1,3-Dichloropropene	0.0007		0.020	ND	U	g	0.27	ND	U	g	0.003	ND	U	g
Trichloroethene (tce)	0.0005		0.016	ND	U	g	0.21	ND	U	g	0.002	ND	U	g
Dibromochloromethane	0.0003		0.010	ND	U	g	0.13	ND	U	g	0.001	ND	U	g
1,1,2-Trichloroethane	0.0007		0.020	ND	U	g	0.27	ND	U	g	0.003	ND	U	g
Benzene	0.0005		0.014	0.10		g	0.18	0.077	J		0.0017	ND	U	g

Base: Kotzebue LRRS
Site: AOC5
Extraction Method: EPA Method 5030
Analytical Method: EPA Method 8260
Matrix: Soil
Units: mg/kg

Table 12.2.1.3
Analytical Data Summary
EPA Method 8260

			Environmental Samples											
		Field ID:		AOC5-SB1-2.5				AOC5-SB1-2.5RE				AOC5-SS1		
		Batch ID:		H569				H569				H569		
Parameters	MDL		PQL	Result	Validity	Comments	PQL	Result	Validity	Comments	PQL	Result	Validity	Comments
trans-1,3-Dichloropropene	0.0005		0.016	ND	U	g	0.20	ND	U	g	0.002	ND	U	g
2-Chloroethyl Vinyl Ether	0.0006		0.019	ND	U	g	0.25	ND	U	g	0.002	ND	U	g
Bromoform	0.0013		0.037	ND	U	g	0.49	ND	U	g	0.005	ND	U	g
Methyl Isobutyl Ketone	0.0015		0.044	ND	U	g	0.58	ND	U	g	0.005	ND	U	g
2-Hexanone	0.0027		0.080	ND	U	g	1.1	ND	U	g	0.010	ND	U	g
Tetrachloroethene (pce)	0.0009		0.026	ND	U	g	0.35	ND	U	g	0.003	ND	U	g
1,1,2,2-Tetrachloroethane	0.0009		0.027	ND	U	g	0.35	ND	U	g	0.0033	ND	U	g
Toluene	0.0009		0.027	1.7		k	0.35	1.6		k	0.0033	ND	U	k
Chlorobenzene	0.0009		0.021	ND	U	g	0.28	ND	U	g	0.003	ND	U	g
Ethylbenzene	0.0004		0.013	1.7		g	0.17	2.0		g	0.0016	ND	U	g
Styrene	0.0006		0.019	ND	U	g	0.25	ND	U	g	0.002	ND	U	g
1,1,2-Trichloro-1,2,2-trifluoroethane	0.0007		0.022	ND	U	g	0.29	ND	U	g	0.003	ND	U	g
Xylenes, total	0.0020		0.059	12 E*	J	k,n	0.78	19		k	0.007	0.003	B	k
1,1,1,2-Tetrachloroethane	0.0010		0.029	ND	U	g	0.39	ND	U	g	0.004	ND	U	g
1,2,3-Trichloropropane	0.0023		0.066	ND	U	g	0.87	ND	U	g	0.008	ND	U	g
Bromochloromethane	0.0007		0.020	ND	U	g	0.26	ND	U	g	0.002	ND	U	g
1-Chlorohexane	0.0007		0.019	ND	U	g	0.25	ND	U	g	0.002	ND	U	g
Bromobenzene	0.0007		0.021	ND	U	g	0.28	ND	U	g	0.0027	ND	U	g

* Analyte detected above linear calibration range.

Base: Kotzebue LRRS
Site: AOC5
Extraction Method: EPA Method 5030
Analytical Method: EPA Method 8260
Matrix: Soil
Units: mg/kg

Table 12.2.1.3
Analytical Data Summary
EPA Method 8260

			Environmental Samples											
		Field ID:	AOC05-SB10-1.0				AOC05-SB11-2.5				AOC05-SB2-2.0			
		Batch ID:		H574				H574				H574		
Parameters	MDL		PQL	Result	Validity	Comments	PQL	Result	Validity	Comments	PQL	Result	Validity	Comments
Chloromethane	0.0009		0.45	ND	U	g	0.39	ND	U	g	0.003	ND	U	g
Bromomethane	0.0008		0.42	ND	U	g	0.36	ND	U	g	0.003	ND	U	g
Vinyl Chloride	0.0010		0.49	ND	U	g	0.42	ND	U	g	0.003	ND	U	g
Chloroethane	0.0010		0.52	ND	U	g	0.44	ND	U	g	0.003	ND	U	g
Methylene Chloride	0.0009		0.44	0.41	B J	a	0.38	0.33	B J	a	0.003	0.002	B J	a
Acetone	0.0039		2.0	ND	U	k	1.7	0.70	J	k	0.01	ND	U	k
Carbon Disulfide	0.0005		0.28	ND	U	g	0.24	ND	U	g	0.002	ND	U	g
1,1-Dichloroethene	0.0012		0.60	ND	U	g	0.51	ND	U	g	0.004	ND	U	g
1,1-Dichloroethane	0.0004		0.19	ND	U	g	0.16	ND	U	g	0.001	ND	U	g
trans-1,2-Dichloroethene	0.0009		0.45	ND	U	g	0.39	ND	U	g	0.003	ND	U	g
cis-1,2-Dichloroethene	0.0011		0.59	ND	U	g	0.50	ND	U	g	0.004	ND	U	g
Chloroform	0.0005		0.24	ND	U	g	0.20	ND	U	g	0.001	ND	U	g
1,2-Dichloroethane	0.0005		0.26	ND	U	g	0.22	ND	U	g	0.002	ND	U	g
Methyl Ethyl Ketone (2-butanone)	0.0025		1.3	ND	U	g	1.1	ND	U	g	0.008	ND	U	g
1,1,1-Trichloroethane	0.0004		0.22	ND	U	g	0.19	ND	U	g	0.001	ND	U	g
Carbon Tetrachloride	0.0010		0.50	ND	U	g	0.43	ND	U	g	0.003	ND	U	g
Vinyl Acetate	0.0016		0.83	ND	U	g	0.71	ND	U	g	0.005	ND	U	g
Bromodichloromethane	0.0006		0.33	ND	U	g	0.29	ND	U	g	0.002	ND	U	g
1,2-Dichloropropane	0.0008		0.43	ND	U	g	0.37	ND	U	g	0.003	ND	U	g
cis-1,3-Dichloropropene	0.0007		0.36	ND	U	g	0.30	ND	U	g	0.002	ND	U	g
Trichloroethene (tce)	0.0005		0.28	ND	U	g	0.24	ND	U	g	0.002	ND	U	g
Dibromochloromethane	0.0003		0.18	ND	U	g	0.15	ND	U	g	0.001	ND	U	g
1,1,2-Trichloroethane	0.0007		0.36	ND	U	g	0.30	ND	U	g	0.002	ND	U	g
Benzene	0.0005		0.24	ND	U	g	0.21	ND	U	g	0.0015	ND	U	g

Base: Kotzebue LRRS
Site: AOC5
Extraction Method: EPA Method 5030
Analytical Method: EPA Method 8260
Matrix: Soil
Units: mg/kg

Table 12.2.1.3
Analytical Data Summary
EPA Method 8260

Environmental Samples

		Field ID:	AOC05-SB10-1.0				AOC05-SB11-2.5				AOC05-SB2-2.0			
		Batch ID:		H574				H574				H574		
Parameters	MDL		PQL	Result	Validity	Comments	PQL	Result	Validity	Comments	PQL	Result	Validity	Comments
trans-1,3-Dichloropropene	0.0005		0.27	ND	U	g	0.23	ND	U	g	0.002	ND	U	g
2-Chloroethyl Vinyl Ether	0.0006		0.33	ND	U	g	0.28	ND	U	g	0.002	ND	U	g
Bromoform	0.0013		0.65	ND	U	g	0.55	ND	U	g	0.004	ND	U	g
Methyl Isobutyl Ketone	0.0015		0.77	ND	U	g	0.66	ND	U	g	0.005	ND	U	g
2-Hexanone	0.0027		1.4	ND	U	g	1.2	ND	U	g	0.009	ND	U	g
Tetrachloroethene (pce)	0.0009		0.46	ND	U	g	0.39	ND	U	g	0.003	ND	U	g
1,1,2,2-Tetrachloroethane	0.0009		0.47	ND	U	g	0.40	ND	U	g	0.0029	ND	U	g
Toluene	0.0009		0.47	ND	U	k	0.40	ND	U	k	0.0029	ND	U	k
Chlorobenzene	0.0009		0.37	ND	U	g	0.32	ND	U	g	0.002	ND	U	g
Ethylbenzene	0.0004		0.22	ND	U	g	0.19	ND	U	g	0.0014	ND	U	g
Styrene	0.0006		0.33	ND	U	g	0.28	ND	U	g	0.002	ND	U	g
1,1,2-Trichloro-1,2,2-trifluoroethane	0.0007		0.38	ND	U	g	0.32	ND	U	g	0.002	ND	U	g
Xylenes, total	0.0020		1.0	1.4		g	0.88	ND	U	g	0.006	ND	U	g
1,1,1,2-Tetrachloroethane	0.0010		0.51	ND	U	g	0.44	ND	U	g	0.003	ND	U	g
1,2,3-Trichloropropane	0.0023		1.2	ND	U	g	0.99	ND	U	g	0.007	ND	U	g
Bromochloromethane	0.0007		0.34	ND	U	g	0.29	ND	U	g	0.002	ND	U	g
1-Chlorohexane	0.0007		0.34	ND	U	g	0.29	ND	U	g	0.002	ND	U	g
Bromobenzene	0.0007		0.38	ND	U	g	0.32	ND	U	g	0.0023	ND	U	g

Base: Kotzebue LRRS
Site: AOC5
Extraction Method: EPA Method 5030
Analytical Method: EPA Method 8260
Matrix: Soil
Units: mg/kg

Table 12.2.1.3
Analytical Data Summary
EPA Method 8260

			Environmental Samples											
		Field ID:		AOC05-SB3-2.0				AOC05-SB4-2.0				AOC05-SB5-2.0		
		Batch ID:		H574				H574				H574		
Parameters	MDL		PQL	Result	Validity	Comments	PQL	Result	Validity	Comments	PQL	Result	Validity	Comments
Chloromethane	0.0009		0.43	ND	U	g	0.37	ND	U	g	0.39	ND	U	g
Bromomethane	0.0008		0.40	ND	U	g	0.35	ND	U	g	0.37	ND	U	g
Vinyl Chloride	0.0010		0.46	ND	U	g	0.40	ND	U	g	0.42	ND	U	g
Chloroethane	0.0010		0.49	ND	U	g	0.43	ND	U	g	0.45	ND	U	g
Methylene Chloride	0.0009		0.42	0.39	B J	a	0.36	0.22	B J	a	0.38	0.18	B J	a
Acetone	0.0039		1.9	0.77	J	k	1.7	ND	U	k	1.8	0.76	J	k
Carbon Disulfide	0.0005		0.26	ND	U	g	0.23	ND	U	g	0.24	ND	U	g
1,1-Dichloroethene	0.0012		0.57	ND	U	g	0.49	ND	U	g	0.52	ND	U	g
1,1-Dichloroethane	0.0004		0.18	ND	U	g	0.15	ND	U	g	0.16	ND	U	g
trans-1,2-Dichloroethene	0.0009		0.43	ND	U	g	0.37	ND	U	g	0.39	ND	U	g
cis-1,2-Dichloroethene	0.0011		0.56	ND	U	g	0.48	ND	U	g	0.51	ND	U	g
Chloroform	0.0005		0.22	0.073	J		0.19	ND	U	g	0.21	ND	U	g
1,2-Dichloroethane	0.0005		0.24	ND	U	g	0.21	ND	U	g	0.22	ND	U	g
Methyl Ethyl Ketone (2-butanone)	0.0025		1.2	ND	U	g	1.0	0.37	J		1.1	ND	U	g
1,1,1-Trichloroethane	0.0004		0.21	ND	U	g	0.18	ND	U	g	0.19	ND	U	g
Carbon Tetrachloride	0.0010		0.48	ND	U	g	0.41	ND	U	g	0.44	ND	U	g
Vinyl Acetate	0.0016		0.79	ND	U	g	0.68	ND	U	g	0.72	ND	U	g
Bromodichloromethane	0.0006		0.32	ND	U	g	0.27	ND	U	g	0.29	ND	U	g
1,2-Dichloropropane	0.0008		0.41	ND	U	g	0.35	ND	U	g	0.37	ND	U	g
cis-1,3-Dichloropropene	0.0007		0.34	ND	U	g	0.29	ND	U	g	0.31	ND	U	g
Trichloroethene (tce)	0.0005		0.26	ND	U	g	0.23	ND	U	g	0.24	ND	U	g
Dibromochloromethane	0.0003		0.17	ND	U	g	0.14	ND	U	g	0.15	ND	U	g
1,1,2-Trichloroethane	0.0007		0.34	ND	U	g	0.29	ND	U	g	0.31	ND	U	g
Benzene	0.0005		0.23	ND	U	g	0.20	ND	U	g	0.21	ND	U	g

Base: Kotzebue LRRS						Table 12.2.1.3								
Site: AOC5						Analytical Data Summary								
Extraction Method: EPA Method 5030						EPA Method 8260								
Analytical Method: EPA Method 8260														
Matrix: Soil														
Units: mg/kg														
			Environmental Samples											
		Field ID:		AOC05-SB3-2.0				AOC05-SB4-2.0				AOC05-SB5-2.0		
		Batch ID:		H574				H574				H574		
Parameters	MDL		PQL	Result	Validity	Comments	PQL	Result	Validity	Comments	PQL	Result	Validity	Comments
trans-1,3-Dichloropropene	0.0005		0.26	ND	U	g	0.22	ND	U	g	0.24	ND	U	g
2-Chloroethyl Vinyl Ether	0.0006		0.31	ND	U	g	0.27	ND	U	g	0.29	ND	U	g
Bromoform	0.0013		0.62	ND	U	g	0.53	ND	U	g	0.56	ND	U	g
Methyl Isobutyl Ketone	0.0015		0.73	ND	U	g	0.63	ND	U	g	0.67	ND	U	g
2-Hexanone	0.0027		1.3	ND	U	g	1.2	ND	U	g	1.2	ND	U	g
Tetrachloroethene (pce)	0.0009		0.44	ND	U	g	0.38	ND	U	g	0.40	ND	U	g
1,1,2,2-Tetrachloroethane	0.0009		0.45	ND	U	g	0.38	ND	U	g	0.41	ND	U	g
Toluene	0.0009		0.45	1.4		k	0.38	ND	U	k	0.41	ND	U	k
Chlorobenzene	0.0009		0.35	ND	U	g	0.30	ND	U	g	0.32	ND	U	g
Ethylbenzene	0.0004		0.21	1.8		g	0.18	ND	U	g	0.19	ND	U	g
Styrene	0.0006		0.31	ND	U	g	0.27	ND	U	g	0.29	ND	U	g
1,1,2-Trichloro-1,2,2-trifluoroethane	0.0007		0.36	ND	U	g	0.31	ND	U	g	0.33	ND	U	g
Xylenes, total	0.0020		0.98	35		g	0.85	4.4		g	0.90	1.2		g
1,1,1,2-Tetrachloroethane	0.0010		0.49	ND	U	g	0.42	ND	U	g	0.45	ND	U	g
1,2,3-Trichloropropane	0.0023		1.1	ND	U	g	0.95	ND	U	g	1.0	ND	U	g
Bromochloromethane	0.0007		0.33	ND	U	g	0.28	ND	U	g	0.30	ND	U	g
1-Chlorohexane	0.0007		0.32	ND	U	g	0.28	ND	U	g	0.29	ND	U	g
Bromobenzene	0.0007		0.36	ND	U	g	0.31	ND	U	g	0.33	ND	U	g

Base: Kotzebue LRRS						Table 12.2.1.3								
Site: AOC5						Analytical Data Summary								
Extraction Method: EPA Method 5030						EPA Method 8260								
Analytical Method: EPA Method 8260														
Matrix: Soil														
Units: mg/kg														
			Environmental Samples											
		Field ID:		AOC05-SB6-1.0				AOC05-SB7-1.0				AOC05-SB8-1.0		
		Batch ID:		H574				H574				H574		
Parameters	MDL		PQL	Result	Validity	Comments	PQL	Result	Validity	Comments	PQL	Result	Validity	Comments
Chloromethane	0.0009		0.57	ND	U	g	0.36	ND	U	g	0.38	ND	U	g
Bromomethane	0.0008		0.53	ND	U	g	0.33	ND	U	g	0.35	ND	U	g
Vinyl Chloride	0.0010		0.61	ND	U	g	0.39	ND	U	g	0.41	ND	U	g
Chloroethane	0.0010		0.65	ND	U	g	0.41	ND	U	g	0.44	ND	U	g
Methylene Chloride	0.0009		0.56	0.46	B J	a	0.35	0.40	B J	a	0.37	0.25	B J	a
Acetone	0.0039		2.5	1.2	J	k	1.6	1.4	J	k	1.7	0.78	J	k
Carbon Disulfide	0.0005		0.35	ND	U	g	0.22	ND	U	g	0.23	ND	U	g
1,1-Dichloroethene	0.0012		0.75	ND	U	g	0.47	ND	U	g	0.50	ND	U	g
1,1-Dichloroethane	0.0004		0.23	ND	U	g	0.15	ND	U	g	0.16	ND	U	g
trans-1,2-Dichloroethene	0.0009		0.57	ND	U	g	0.36	ND	U	g	0.38	ND	U	g
cis-1,2-Dichloroethene	0.0011		0.74	ND	U	g	0.46	ND	U	g	0.49	ND	U	g
Chloroform	0.0005		0.30	ND	U	g	0.19	0.077	J		0.20	ND	U	g
1,2-Dichloroethane	0.0005		0.32	ND	U	g	0.20	ND	U	g	0.22	ND	U	g
Methyl Ethyl Ketone (2-butanone)	0.0025		1.6	0.65	J		1.0	ND	U	g	1.1	0.51	J	
1,1,1-Trichloroethane	0.0004		0.28	ND	U	g	0.18	ND	U	g	0.19	ND	U	g
Carbon Tetrachloride	0.0010		0.63	ND	U	g	0.40	ND	U	g	0.42	ND	U	g
Vinyl Acetate	0.0016		1.0	ND	U	g	0.66	ND	U	g	0.70	ND	U	g
Bromodichloromethane	0.0006		0.42	ND	U	g	0.27	ND	U	g	0.28	ND	U	g
1,2-Dichloropropane	0.0008		0.54	ND	U	g	0.34	ND	U	g	0.36	ND	U	g
cis-1,3-Dichloropropene	0.0007		0.45	ND	U	g	0.28	ND	U	g	0.30	ND	U	g
Trichloroethene (tce)	0.0005		0.35	ND	U	g	0.22	0.49		g	0.23	ND	U	g
Dibromochloromethane	0.0003		0.22	ND	U	g	0.14	ND	U	g	0.15	ND	U	g
1,1,2-Trichloroethane	0.0007		0.45	ND	U	g	0.28	ND	U	g	0.30	ND	U	g
Benzene	0.0005		0.30	ND	U	g	0.19	ND	U	g	0.20	ND	U	g

Base: Kotzebue LRRS
Site: AOC5
Extraction Method: EPA Method 5030
Analytical Method: EPA Method 8260
Matrix: Soil
Units: mg/kg

Table 12.2.1.3
Analytical Data Summary
EPA Method 8260

			Environmental Samples											
		Field ID:		AOC05-SB6-1.0				AOC05-SB7-1.0				AOC05-SB8-1.0		
		Batch ID:		H574				H574				H574		
Parameters	MDL		PQL	Result	Validity	Comments	PQL	Result	Validity	Comments	PQL	Result	Validity	Comments
trans-1,3-Dichloropropene	0.0005		0.34	ND	U	g	0.22	ND	U	g	0.23	ND	U	g
2-Chloroethyl Vinyl Ether	0.0006		0.41	ND	U	g	0.26	ND	U	g	0.28	ND	U	g
Bromoform	0.0013		0.81	ND	U	g	0.51	ND	U	g	0.54	ND	U	g
Methyl Isobutyl Ketone	0.0015		0.97	ND	U	g	0.61	ND	U	g	0.65	ND	U	g
2-Hexanone	0.0027		1.8	ND	U	g	1.1	ND	U	g	1.2	ND	U	g
Tetrachloroethene (pce)	0.0009		0.58	ND	U	g	0.37	ND	U	g	0.39	ND	U	g
1,1,2,2-Tetrachloroethane	0.0009		0.59	ND	U	g	0.37	ND	U	g	0.39	ND	U	g
Toluene	0.0009		0.59	0.33	J	k	0.37	ND	U	g	0.39	ND	U	g
Chlorobenzene	0.0009		0.47	ND	U	g	0.29	ND	U	g	0.41	ND	U	g
Ethylbenzene	0.0004		0.28	1.1		g	0.18	0.15	J		0.19	1.7		g
Styrene	0.0006		0.41	ND	U	g	0.26	ND	U	g	0.28	ND	U	g
1,1,2-Trichloro-1,2,2-trifluoroethane	0.0007		0.48	ND	U	g	0.30	ND	U	g	0.32	ND	U	g
Xylenes, total	0.0020		1.3	14		g	0.82	6.6		g	0.87	14		g
1,1,1,2-Tetrachloroethane	0.0010		0.65	ND	U	g	0.41	ND	U	g	0.43	ND	U	g
1,2,3-Trichloropropane	0.0023		1.5	ND	U	g	0.92	ND	U	g	0.98	ND	U	g
Bromochloromethane	0.0007		0.43	ND	U	g	0.27	ND	U	g	0.29	ND	U	g
1-Chlorohexane	0.0007		0.42	ND	U	g	0.27	ND	U	g	0.28	ND	U	g
Bromobenzene	0.0007		0.47	ND	U	g	0.30	ND	U	g	0.32	ND	U	g

Base: Kotzebue LRRS						Table 12.2.1.3								
Site: AOC5						Analytical Data Summary								
Extraction Method: EPA Method 5030						EPA Method 8260								
Analytical Method: EPA Method 8260														
Matrix: Soil														
Units: mg/kg														
			Environmental Samples											
		Field ID:		AOC05-SB9-1.5										
		Batch ID:		H574										
Parameters	MDL		PQL	Result	Validity	Comments								
Chloromethane	0.0009		0.35	ND	U	g								
Bromomethane	0.0008		0.32	ND	U	g								
Vinyl Chloride	0.0010		0.37	ND	U	g								
Chloroethane	0.0010		0.40	ND	U	g								
Methylene Chloride	0.0009		0.34	0.28	B J	a								
Acetone	0.0039		1.6	0.66	J	k								
Carbon Disulfide	0.0005		0.21	ND	U	g								
1,1-Dichloroethene	0.0012		0.46	ND	U	g								
1,1-Dichloroethane	0.0004		0.14	ND	U	g								
trans-1,2-Dichloroethene	0.0009		0.35	ND	U	g								
cis-1,2-Dichloroethene	0.0011		0.45	ND	U	g								
Chloroform	0.0005		0.18	ND	U	g								
1,2-Dichloroethane	0.0005		0.20	ND	U	g								
Methyl Ethyl Ketone (2-butanone)	0.0025		0.97	0.45	J									
1,1,1-Trichloroethane	0.0004		0.17	ND	U	g								
Carbon Tetrachloride	0.0010		0.39	ND	U	g								
Vinyl Acetate	0.0016		0.64	ND	U	g								
Bromodichloromethane	0.0006		0.26	ND	U	g								
1,2-Dichloropropane	0.0008		0.33	ND	U	g								
cis-1,3-Dichloropropene	0.0007		0.27	ND	U	g								
Trichloroethene (tce)	0.0005		0.21	ND	U	g								
Dibromochloromethane	0.0003		0.13	ND	U	g								
1,1,2-Trichloroethane	0.0007		0.27	ND	U	g								
Benzene	0.0005		0.19	ND	U	g								

Base: Kotzebue LRRS						Table 12.2.1.3							
Site: AOC5						Analytical Data Summary							
Extraction Method: EPA Method 5030						EPA Method 8260							
Analytical Method: EPA Method 8260													
Matrix: Soil													
Units: mg/kg													
			Environmental Samples										
		Field ID:		AOC05-SB9-1.5									
		Batch ID:		H574									
Parameters	MDL		PQL	Result	Validity	Comments							
trans-1,3-Dichloropropene	0.0005		0.21	ND	U	g							
2-Chloroethyl Vinyl Ether	0.0006		0.25	ND	U	g							
Bromoform	0.0013		0.50	ND	U	g							
Methyl Isobutyl Ketone	0.0015		0.59	ND	U	g							
2-Hexanone	0.0027		1.1	ND	U	g							
Tetrachloroethene (pce)	0.0009		0.36	ND	U	g							
1,1,2,2-Tetrachloroethane	0.0009		0.36	ND	U	g							
Toluene	0.0009		0.36	ND	U	k							
Chlorobenzene	0.0009		0.28	ND	U	g							
Ethylbenzene	0.0004		0.17	ND	U	g							
Styrene	0.0006		0.25	ND	U	g							
1,1,2-Trichloro-1,2,2-trifluoroethane	0.0007		0.29	ND	U	g							
Xylenes, total	0.0020		0.79	ND	U	g							
1,1,1,2-Tetrachloroethane	0.0010		0.39	ND	U	g							
1,2,3-Trichloropropane	0.0023		0.89	ND	U	g							
Bromochloromethane	0.0007		0.26	ND	U	g							
1-Chlorohexane	0.0007		0.26	ND	U	g							
Bromobenzene	0.0007		0.29	ND	U	g							

Base: Kotzebue LRRS						Table 12.2.1.3								
Site: AOC5						Analytical Data Summary								
Extraction Method: EPA Method 5030						EPA Method 8260								
Analytical Method: EPA Method 8260														
Matrix: Soil														
Units: mg/kg														
			Environmental Samples											
		Field ID:	AOC-05-SB11-1.0											
		Batch ID:	H615											
Parameters	MDL		PQL	Result	Validity	Comments								
Chloromethane	0.0009		0.027	ND	U	g								
Bromomethane	0.0008		0.025	ND	U	g								
Vinyl Chloride	0.0010		0.029	ND	U	g								
Chloroethane	0.0010		0.031	ND	U	g								
Methylene Chloride	0.0009		0.027	0.012	J	k								
Acetone	0.0039		0.12	ND	U	g								
Carbon Disulfide	0.0005		0.017	ND	U	g								
1,1-Dichloroethene	0.0012		0.036	ND	U	g								
1,1-Dichloroethane	0.0004		0.011	ND	U	g								
trans-1,2-Dichloroethene	0.0009		0.027	ND	U	g								
cis-1,2-Dichloroethene	0.0011		0.035	ND	U	g								
Chloroform	0.0005		0.014	ND	U	g								
1,2-Dichloroethane	0.0005		0.015	ND	U	g								
Methyl Ethyl Ketone (2-butanone)	0.0025		0.076	ND	U	g								
1,1,1-Trichloroethane	0.0004		0.013	ND	U	g								
Carbon Tetrachloride	0.0010		0.030	ND	U	g								
Vinyl Acetate	0.0016		0.050	ND	U	g								
Bromodichloromethane	0.0006		0.020	ND	U	g								
1,2-Dichloropropane	0.0008		0.026	ND	U	g								
cis-1,3-Dichloropropene	0.0007		0.021	ND	U	g								
Trichloroethene (tce)	0.0005		0.017	ND	U	g								
Dibromochloromethane	0.0003		0.010	ND	U	g								
1,1,2-Trichloroethane	0.0007		0.021	ND	U	g								
Benzene	0.0005		0.014	ND	U	g								

Base: Kotzebue LRRS						Table 12.2.1.3							
Site: AOC5						Analytical Data Summary							
Extraction Method: EPA Method 5030						EPA Method 8260							
Analytical Method: EPA Method 8260													
Matrix: Soil													
Units: mg/kg													
			Environmental Samples										
		Field ID:	AOC-05-SB11-1.0										
		Batch ID:		H615									
Parameters	MDL		PQL	Result	Validity	Comments							
trans-1,3-Dichloropropene	0.0005		0.016	ND	U	g							
2-Chloroethyl Vinyl Ether	0.0006		0.020	ND	U	g							
Bromoform	0.0013		0.039	ND	U	g							
Methyl Isobutyl Ketone	0.0015		0.046	ND	U	g							
2-Hexanone	0.0027		0.085	ND	U	g							
Tetrachloroethene (pce)	0.0009		0.028	ND	U	g							
1,1,2,2-Tetrachloroethane	0.0009		0.028	ND	U	g							
Toluene	0.0009		0.028	ND	U	g							
Chlorobenzene	0.0009		0.022	ND	U	g							
Ethylbenzene	0.0004		0.013	ND	U	g							
Styrene	0.0006		0.020	ND	U	g							
1,1,2-Trichloro-1,2,2-trifluoroethane	0.0007		0.023	ND	U	g							
Xylenes, total	0.0020		0.062	ND	U	g							
1,1,1,2-Tetrachloroethane	0.0010		0.031	ND	U	g							
1,2,3-Trichloropropane	0.0023		0.070	ND	U	g							
Bromochloromethane	0.0007		0.021	ND	U	g							
1-Chlorohexane	0.0007		0.020	ND	U	g							
Bromrbenzene	0.0007		0.023	ND	U	g							

Base: Kotzebue LRRS						Table 2.4							
Site: AOC5						Analytical Data Summary							
Extraction Method: EPA Method 3550						EPA Method 8270							
Analytical Method: EPA Method 8270													
Matrix: Soil													
Units: mg/kg													
			Environmental Samples										
		Field ID:		AOC5-SB1-2.5				AOC5-SS1					
		Batch ID:		H569				H569					
Parameters	MDL		PQL	Result	Validity	Comments	PQL	Result	Validity	Comments			
2,4-Dinitrotoluene	0.02		0.8	ND	U	g	0.1	ND	U	g			
Diethyl Phthalate	0.04		1.2	ND	U	g	0.1	ND	U	g			
4-Chlorophenyl Phenyl Ether	0.02		0.7	ND	U	g	0.1	ND	U	g			
Fluorene	0.03		1.0	0.9	J		0.1	ND	U	g			
4-Nitroaniline	0.1		4.5	ND	U	g	0.44	ND	U	g			
4,6-Dinitro-2-Methylphenol	0.09		3.0	ND	U	g	0.29	ND	U	g			
N-Nitrosodiphenylamine	0.08		2.9	ND	U	g	0.3	ND	U	g			
4-Bromophenyl Phenyl Ether	0.02		0.7	ND	U	g	0.1	ND	U	g			
Hexachlorobenzene	0.03		1.1	ND	U	g	0.1	ND	U	g			
Pentachlorophenol	0.03		1.1	ND	U	g	0.11	ND	U	g			
Phenanthrene	0.03		1.1	0.5	J		0.1	0.04	J				
Anthracene	0.04		1.5	ND	U	g	0.1	ND	U	g			
di-n-butyl Phthalate	0.06		2.1	ND	U	g	0.2	ND	U	g			
Fluroanthene	0.03		1.1	0.9	J		0.1	0.05	J				
Pyrene	0.03		1.0	0.9	J		0.1	0.1	J				
Butylbenzylphthalate	0.02		0.7	ND	U	g	0.1	ND	U	g			
3,3'-Dichlorobenzidine	0.06		1.9	ND	U	g	0.2	ND	U	g			
Benzo(a)anthracene	0.04		1.3	ND	U	g	0.1	ND	U	g			
bis(2-Ethylhexyl) Phthalate	0.04		1.4	ND	U	g	0.1	0.2		a			
Chrysene	0.05		1.5	ND	U	g	0.1	ND	U	g			
di-n-Octylphthalate	0.02		0.8	ND	U	g	0.1	ND	U	g			
Benzo(b)fluoranthene	0.04		1.5	ND	U	g	0.1	ND	U	g			
Benzo(k)fluoranthene	0.07		2.5	ND	U	g	0.2	ND	U	g			
Benzo(a)pyrene	0.04		1.3	ND	U	g	0.1	ND	U	g			
Indeno(1,2,3-c,d)pyrene	0.03		0.9	ND	U	g	0.1	ND	U	g			
Dibenzo(a,h)anthracene	0.02		0.7	ND	U	g	0.1	ND	U	g			
Benzo(g,h,i)perylene	0.03		1.1	ND	U	g	0.1	ND	U	g			

Base: Kotzebue LRRS
Site: AOC5
Extraction Method: EPA Method 3550
Analytical Method: EPA Method 8270
Matrix: Soil
Units: mg/kg

Table 12.2.1.4
Analytical Data Summary
EPA Method 8270

			Environmental Samples							
		Field ID:		AOC5-SB1-2.5				AOC5-SS1		
		Batch ID:		H569				H569		
Parameters	MDL		PQL	Result	Validity	Comments	PQL	Result	Validity	Comments
Phenol	0.05		1.8	ND	U	g	0.2	0.1	J	
bis(2-Chloroethyl) Ether	0.04		1.3	ND	U	g	0.1	ND	U	g
2-Chlorophenol	0.07		2.4	ND	U	g	0.2	ND	U	g
1,3-Dichlorobenzene	0.04		1.3	ND	U	g	0.1	ND	U	g
1,4-Dichlorobenzene	0.03		0.9	ND	U	g	0.1	ND	U	g
Benzyl Alcohol	0.05		1.7	ND	U	g	0.2	ND	U	g
1,2-Dichlorobenzene	0.04		1.3	ND	U	g	0.1	ND	U	g
2-Methylphenol	0.10		3.3	ND	U	g	0.3	ND	U	g
2,2'-Oxybis (1-Chloropropane)	0.03		1.1	ND	U	g	0.1	ND	U	g
4-Methylphenol	0.08		2.6	ND	U	g	0.3	0.5		g
N-Nitrosodi-n-propylamine	0.03		0.9	ND	U	g	0.1	ND	U	g
Hexachloroethane	0.04		1.3	ND	U	g	0.1	ND	U	g
Nitrobenzene	0.02		0.8	ND	U	g	0.1	ND	U	g
Isophorone	0.03		1.1	ND	U	g	0.1	ND	U	g
2-Nitrophenol	0.03		1.2	ND	U	g	0.1	ND	U	g
2,4-Dimethylphenol	0.17		3.2	ND	U	g	0.3	ND	U	g
Benzoic Acid	0.06		1.9	ND	U	g	0.19	0.14	J	
bis(2-Chloroethoxy) Methane	0.04		1.2	ND	U	g	0.1	ND	U	g
2,4-Dichlorophenol	0.04		1.5	ND	U	g	0.1	ND	U	g
1,2,4-Trichlorobenzene	0.03		1.1	ND	U	g	0.1	ND	U	g
Naphthalene	0.04		1.2	10		g	0.1	0.04	J	
4-Chloroaniline	0.10		3.5	ND	U	g	0.3	ND	U	g
Hexachlorobutadiene	0.03		1.1	ND	U	g	0.1	ND	U	g
4-Chloro-3-Methylphenol	0.06		2.0	ND	U	g	0.2	ND	U	g
2-Methylnaphthalene	0.03		1.1	27		g	0.1	0.04	J	
Hexachlorocyclopentadiene	0.03		0.9	ND	U	g	0.1	ND	U	g
2,4,6-Trichlorophenol	0.04		1.4	ND	U	g	0.1	ND	U	g
2,4,5-Trichlorophenol	0.03		0.85	ND	U	g	0.08	ND	U	g
2-Chloronaphthalene	0.03		1.1	ND	U	g	0.1	ND	U	g
2-Nitroaniline	0.02		2.2	ND	U	g	0.06	ND	U	g
Dimethyl Phthalate	0.04		1.2	ND	U	g	0.1	ND	U	g
Acenaphthylene	0.04		1.4	ND	U	g	0.1	ND	U	g
3-Nitroaniline	0.11		3.7	ND	U	g	0.36	ND	U	g
Acenaphthene	0.03		1.0	0.8	J		0.1	ND	U	g
2,4-Dinitrophenol	0.09		3.0	ND	U	g	0.29	ND	U	g
4-Nitrophenol	0.07		2.2	ND	U	g	0.22	ND	U	g
Dibenzofuran	0.03		1.0	0.6	J		0.1	ND	U	g
2,6-Dinitrotoluene	0.04		1.4	ND	U	g	0.1	ND	U	g

Base: Kotzebue LRRS						Table 12.2.1.4								
Site: AOC5						Analytical Data Summary								
Extraction Method: EPA Method 3550						EPA Method 8270								
Analytical Method: EPA Method 8270														
Matrix: Soil														
Units: mg/kg														
			Environmental Samples											
		Field ID:		AOC5-SB1-2.5				AOC5-SS1						
		Batch ID:		H569				H569						
Parameters	MDL		PQL	Result	Validity	Comments	PQL	Result	Validity	Comments				
2,4-Dinitrotoluene	0.02		0.8	ND	U	g	0.1	ND	U	g				
Diethyl Phthalate	0.04		1.2	ND	U	g	0.1	ND	U	g				
4-Chlorophenyl Phenyl Ether	0.02		0.7	ND	U	g	0.1	ND	U	g				
Fluorene	0.03		1.0	0.9	J		0.1	ND	U	g				
4-Nitroaniline	0.1		4.5	ND	U	g	0.44	ND	U	g				
4,6-Dinitro-2-Methylphenol	0.09		3.0	ND	U	g	0.29	ND	U	g				
N-Nitrosodiphenylamine	0.08		2.9	ND	U	g	0.3	ND	U	g				
4-Bromophenyl Phenyl Ether	0.02		0.7	ND	U	g	0.1	ND	U	g				
Hexachlorobenzene	0.03		1.1	ND	U	g	0.1	ND	U	g				
Pentachlorophenol	0.03		1.1	ND	U	g	0.11	ND	U	g				
Phenanthrene	0.03		1.1	0.5	J		0.1	0.04	J					
Anthracene	0.04		1.5	ND	U	g	0.1	ND	U	g				
di-n-butyl Phthalate	0.06		2.1	ND	U	g	0.2	ND	U	g				
Fluroanthene	0.03		1.1	0.9	J		0.1	0.05	J					
Pyrene	0.03		1.0	0.9	J		0.1	0.1	J					
Butylbenzylphthalate	0.02		0.7	ND	U	g	0.1	ND	U	g				
3,3'-Dichlorobenzidine	0.06		1.9	ND	U	g	0.2	ND	U	g				
Benzo(a)anthracene	0.04		1.3	ND	U	g	0.1	ND	U	g				
bis(2-Ethylhexyl) Phthalate	0.04		1.4	ND	U	g	0.1	0.2	B	a				
Chrysene	0.05		1.5	ND	U	g	0.1	ND	U	g				
di-n-Octylphthalate	0.02		0.8	ND	U	g	0.1	ND	U	g				
Benzo(b)fluoranthene	0.04		1.5	ND	U	g	0.1	ND	U	g				
Benzo(k)fluoranthene	0.07		2.5	ND	U	g	0.2	ND	U	g				
Benzo(a)pyrene	0.04		1.3	ND	U	g	0.1	ND	U	g				
Indeno(1,2,3-c,d)pyrene	0.03		0.9	ND	U	g	0.1	ND	U	g				
Dibenzo(a,h)anthracene	0.02		0.7	ND	U	g	0.1	ND	U	g				
Benzo(g,h,i)perylene	0.03		1.1	ND	U	g	0.1	ND	U	g				

Base: Kotzebue LRRS
Site: AOC5
Extraction Method: EPA Method 3550
Analytical Method: EPA Method 8270
Matrix: Soil
Units: mg/kg

Table 12.2.1.4
Analytical Data Summary
EPA Method 8270

			Environmental Samples											
		Field ID:	AOC05-SB10-1.0				AOC05-SB11-2.5				AOC05-SB2-2.0			
		Batch ID:		H574				H574				H574		
Parameters	MDL		PQL	Result	Validity	Comments	PQL	Result	Validity	Comments	PQL	Result	Validity	Comments
Phenol	0.05		2.0	ND	U	g	2.1	ND	U	g	0.2	ND	U	g
bis(2-Chloroethyl) Ether	0.04		1.5	ND	U	g	1.5	ND	U	g	0.1	ND	U	g
2-Chlorophenol	0.07		2.7	ND	U	g	2.8	ND	U	g	0.2	ND	U	g
1,3-Dichlorobenzene	0.04		1.4	ND	U	k	1.5	ND	U	k	0.1	ND	U	k
1,4-Dichlorobenzene	0.03		0.9	ND	U	g	1.0	ND	U	g	0.1	ND	U	g
Benzyl Alcohol	0.05		1.9	ND	U	g	2.0	ND	U	g	0.2	ND	U	g
1,2-Dichlorobenzene	0.04		1.4	ND	U	g	1.5	ND	U	g	0.1	ND	U	g
2-Methylphenol	0.10		3.7	ND	U	g	3.9	ND	U	g	0.3	ND	U	g
2,2'-Oxybis (1-Chloropropane)	0.03		1.2	ND	U	g	1.3	ND	U	g	0.1	ND	U	g
4-Methylphenol	0.08		2.9	ND	U	g	3.0	ND	U	g	0.3	ND	U	g
N-Nitrosodi-n-propylamine	0.03		3.6	ND	U	g	1.1	ND	U	g	0.1	ND	U	g
Hexachloroethane	0.04		1.5	ND	U	g	1.5	ND	U	g	0.1	ND	U	g
Nitrobenzene	0.02		1.3	ND	U	g	1.0	ND	U	g	0.1	ND	U	g
Isophorone	0.03		1.4	ND	U	g	12	ND		g	0.1	ND	U	g
2-Nitrophenol	0.03		2.2	ND	U	g	5.8	ND		g	0.1	ND	U	g
2,4-Dimethylphenol	0.17		3.5	ND	U	g	7.0	ND		g	0.3	ND	U	g
Benzoic Acid	0.06		2.5	ND	U	g	2.2	ND	U	g	0.19	ND	U	g
bis(2-Chloroethoxy) Methane	0.04		1.3	ND	U	g	1.6	ND	U	g	0.1	ND	U	g
2,4-Dichlorophenol	0.04		1.6	ND	U	g	1.7	ND	U	g	0.1	ND	U	g
1,2,4-Trichlorobenzene	0.03		1.2	ND	U	g	1.3	ND	U	g	0.1	ND	U	g
Naphthalene	0.04		1.3	7.6		g	1.4	12		g	0.1	ND	U	g
4-Chloroaniline	0.10		3.8	ND	U	g	4.0	ND	U	g	0.3	ND	U	g
Hexachlorobutadiene	0.03		1.3	ND	U	g	1.3	ND	U	g	0.1	ND	U	g
4-Chloro-3-Methylphenol	0.06		2.6	ND	U	g	2.3	ND	U	g	0.2	ND	U	g
2-Methylnaphthalene	0.03		1.3	14		g	1.3	30		g	0.1	ND	U	g
Hexachlorocyclopentadiene	0.03		0.9	ND	U	g	1.0	ND	U	g	0.1	ND	U	g
2,4,6-Trichlorophenol	0.04		1.6	ND	U	g	1.7	ND	U	g	0.1	ND	U	g
2,4,5-Trichlorophenol	0.03		0.94	ND	U	g	0.99	ND	U	g	0.08	ND	U	g
2-Chloronaphthalene	0.03		1.2	ND	U	g	1.3	ND	U	g	0.1	ND	U	g
2-Nitroaniline	0.02		2.8	ND	U	g	4.2	ND	U	g	0.06	ND	U	g
Dimethyl Phthalate	0.04		1.3	ND	U	g	1.4	ND	U	g	0.1	ND	U	g
Acenaphthylene	0.04		1.5	ND	U	g	1.6	ND	U	g	0.1	ND	U	g
3-Nitroaniline	0.11		4.1	ND	U	g	4.4	ND	U	g	0.36	ND	U	g
Acenaphthene	0.03		1.1	0.9	J		1.2	0.9	J		0.1	ND	U	g
2,4-Dinitrophenol	0.09		3.3	ND	U	g	3.5	ND	U	g	0.29	ND	U	g
4-Nitrophenol	0.07		2.5	ND	U	g	7.9	ND	U	g	0.22	ND	U	g
Dibenzofuran	0.03		1.2	ND	U	g	1.2	ND	U	g	0.1	ND	U	g
2,6-Dinitrotoluene	0.04		6.1	ND	U	g	1.9	ND	U	g	0.1	ND	U	g

Base: Kotzebue LRRS						Table 12.2.1.4								
Site: AOC5						Analytical Data Summary								
Extraction Method: EPA Method 3550						EPA Method 8270								
Analytical Method: EPA Method 8270														
Matrix: Soil														
Units: mg/kg														
			Environmental Samples											
		Field ID:	AOC05-SB10-1.0				AOC05-SB11-2.5					AOC05-SB2-2.0		
		Batch ID:	H574				H574					H574		
Parameters	MDL		PQL	Result	Validity	Comments	PQL	Result	Validity	Comments	PQL	Result	Validity	Comments
2,4-Dinitrotoluene	0.02		0.8	ND	U	g	0.9	ND	U	g	0.1	ND	U	g
Diethyl Phthalate	0.04		1.7	ND	U	g	1.4	ND	U	g	0.1	ND	U	g
4-Chlorophenyl Phenyl Ether	0.02		0.8	ND	U	g	0.9	ND	U	g	0.1	ND	U	g
Fluorene	0.03		1.1	1.2		g	1.2	1.2		g	0.1	ND	U	g
4-Nitroaniline	0.1		4.9	ND	U	g	5.2	ND	U	g	0.43	ND	U	g
4,6-Dinitro-2-Methylphenol	0.09		3.3	ND	U	g	3.5	ND	U	g	0.29	ND	U	g
N-Nitrosodiphenylamine	0.08		3.1	ND	U	g	3.3	ND	U	g	0.3	ND	U	g
4-Bromophenyl Phenyl Ether	0.02		0.8	ND	U	g	0.9	ND	U	g	0.1	ND	U	g
Hexachlorobenzene	0.03		1.2	ND	U	g	1.3	ND	U	g	0.1	ND	U	g
Pentachlorophenol	0.03		1.2	ND	U	g	1.3	ND	U	g	0.11	ND	U	g
Phenanthrene	0.03		1.2	ND	U	g	1.3	ND	U	g	0.1	ND	U	g
Anthracene	0.04		1.6	ND	U	g	1.7	ND	U	g	0.1	ND	U	g
di-n-butyl Phthalate	0.06		2.3	ND	U	g	2.5	ND	U	g	0.2	ND	U	g
Fluroanthene	0.03		1.3	ND	U	g	1.3	ND	U	g	0.1	ND	U	g
Pyrene	0.03		1.1	ND	U	g	1.1	ND	U	g	0.1	0.3		g
Butylbenzylphthalate	0.02		0.8	ND	U	g	0.9	ND	U	g	0.1	ND	U	g
3,3'-Dichlorobenzidine	0.06		2.1	ND	U	g	2.3	ND	U	g	0.2	ND	U	g
Benzo(a)anthracene	0.04		1.4	ND	U	g	1.5	ND	U	g	0.1	ND	U	g
bis(2-Ethylhexyl) Phthalate	0.04		1.5	ND	U	g	1.6	ND	U	g	0.1	ND	U	g
Chrysene	0.05		1.7	ND	U	g	1.8	ND	U	g	0.1	ND	U	g
di-n-Octylphthalate	0.02		0.9	ND	U	g	0.9	ND	U	g	0.1	ND	U	g
Benzo(b)fluoranthene	0.04		1.6	ND	U	g	1.7	ND	U	g	0.1	ND	U	g
Benzo(k)fluoranthene	0.07		2.8	ND	U	g	2.9	ND	U	g	0.2	ND	U	g
Benzo(a)pyrene	0.04		1.5	ND	U	g	1.6	ND	U	g	0.1	ND	U	g
Indeno(1,2,3-c,d)pyrene	0.03		1.0	ND	U	g	1.1	ND	U	g	0.1	ND	U	g
Dibenzo(a,h)anthracene	0.02		0.8	ND	U	g	0.9	ND	U	g	0.1	ND	U	g
Benzo(g,h,i)perylene	0.03		1.2	ND	U	g	1.3	ND	U	g	0.1	ND	U	g

Base: Kotzebue LRRS
Site: AOC5
Extraction Method: EPA Method 3550
Analytical Method: EPA Method 8270
Matrix: Soil
Units: mg/kg

Table 12.2.1.4
Analytical Data Summary
EPA Method 8270

			Environmental Samples											
		Field ID:		AOC05-SB3-2.0				AOC05-SB4-2.0				AOC05-SB5-2.0		
		Batch ID:		H574				H574				H574		
Parameters	MDL		PQL	Result	Validity	Comments	PQL	Result	Validity	Comments	PQL	Result	Validity	Comments
Phenol	0.05		1.9	ND	U	g	1.8	ND	U	g	0.2	ND	U	g
bis(2-Chloroethyl) Ether	0.04		1.4	ND	U	g	1.3	ND	U	g	0.1	ND	U	g
2-Chlorophenol	0.07		2.5	ND	U	g	2.4	ND	U	g	0.2	ND	U	g
1,3-Dichlorobenzene	0.04		1.4	ND	U	k	1.3	ND	U	k	0.1	ND	U	k
1,4-Dichlorobenzene	0.03		0.9	ND	U	g	0.9	ND	U	g	0.1	ND	U	g
Benzyl Alcohol	0.05		1.8	ND	U	g	1.7	ND	U	g	0.2	ND	U	g
1,2-Dichlorobenzene	0.04		1.3	ND	U	g	1.3	ND	U	g	0.1	ND	U	g
2-Methylphenol	0.10		3.5	ND	U	g	3.3	ND	U	g	0.3	ND	U	g
2,2'-Oxybis (1-Chloropropane)	0.03		1.2	ND	U	g	1.1	ND	U	g	0.1	ND	U	g
4-Methylphenol	0.08		2.7	ND	U	g	2.6	ND	U	g	0.2	ND	U	g
N-Nitrosodi-n-propylamine	0.03		1.0	ND	U	g	0.9	ND	U	g	0.1	ND	U	g
Hexachloroethane	0.04		1.4	ND	U	g	1.3	ND	U	g	0.1	ND	U	g
Nitrobenzene	0.02		0.9	ND	U	g	0.8	ND	U	g	0.1	ND	U	g
Isophorone	0.03		1.4	ND	U	g	1.1	ND	U	g	0.1	ND	U	g
2-Nitrophenol	0.03		1.2	ND	U	g	1.2	ND	U	g	0.1	ND	U	g
2,4-Dimethylphenol	0.17		3.3	ND	U	g	3.2	ND	U	g	0.3	ND	U	g
Benzoic Acid	0.06		3.0	ND	U	g	1.9	ND	U	g	0.17	ND	U	g
bis(2-Chloroethoxy) Methane	0.04		1.3	ND	U	g	1.2	ND	U	g	0.1	ND	U	g
2,4-Dichlorophenol	0.04		1.6	ND	U	g	1.5	ND	U	g	0.1	ND	U	g
1,2,4-Trichlorobenzene	0.03		1.2	ND	U	g	1.1	ND	U	g	0.1	ND	U	g
Naphthalene	0.04		1.3	12		g	1.2	ND	U	g	0.1	2.6		g
4-Chloroaniline	0.10		3.7	ND	U	g	3.5	ND	U	g	0.3	ND	U	g
Hexachlorobutadiene	0.03		1.2	ND	U	g	1.1	ND	U	g	0.1	ND	U	g
4-Chloro-3-Methylphenol	0.06		2.1	ND	U	g	2.0	ND	U	g	0.2	ND	U	g
2-Methylnaphthalene	0.03		1.2	33		g	1.1	ND	U	g	0.1	4.4 E*	J	n
Hexachlorocyclopentadiene	0.03		0.9	ND	U	g	0.9	ND	U	g	0.1	ND	U	g
2,4,6-Trichlorophenol	0.04		1.5	ND	U	g	1.4	ND	U	g	0.1	ND	U	g
2,4,5-Trichlorophenol	0.03		0.90	ND	U	g	0.85	ND	U	g	0.08	ND	U	g
2-Chloronaphthalene	0.03		1.2	ND	U	g	1.1	ND	U	g	0.1	ND	U	g
2-Nitroaniline	0.02		7.2	ND	U	g	0.65	ND	U	g	0.06	ND	U	g
Dimethyl Phthalate	0.04		1.3	ND	U	g	1.2	ND	U	g	0.1	ND	U	g
Acenaphthylene	0.04		1.4	ND	U	g	1.4	ND	U	g	0.1	ND	U	g
3-Nitroaniline	0.11		3.9	ND	U	g	3.8	ND	U	g	0.34	ND	U	g
Acenaphthene	0.03		1.1	0.6	J		1.0	ND	U	g	0.1	ND	U	g
2,4-Dinitrophenol	0.09		3.2	ND	U	g	3.0	ND	U	g	0.27	ND	U	g
4-Nitrophenol	0.07		3.8	ND	U	g	2.2	ND	U	g	0.20	ND	U	g
Dibenzofuran	0.03		1.1	ND	U	g	1.1	ND	U	g	0.1	ND	U	g
2,6-Dinitrotoluene	0.04		1.5	ND	U	g	1.4	ND	U	g	0.1	ND	U	g

* Analyte detected above linear calibration range.

Base: Kotzebue LRRS						Table 12.2.1.4								
Site: AOC5						Analytical Data Summary								
Extraction Method: EPA Method 3550						EPA Method 8270								
Analytical Method: EPA Method 8270														
Matrix: Soil														
Units: mg/kg														
			Environmental Samples											
		Field ID:		AOC05-SB3-2.0				AOC05-SB4-2.0				AOC05-SB5-2.0		
		Batch ID:		H574				H574				H574		
Parameters	MDL		PQL	Result	Validity	Comments	PQL	Result	Validity	Comments	PQL	Result	Validity	Comments
2,4-Dinitrotoluene	0.02		1.6	ND	U	g	0.8	ND	U	g	0.1	ND	U	g
Diethyl Phthalate	0.04		1.2	ND	U	g	1.2	ND	U	g	0.1	ND	U	g
4-Chlorophenyl Phenyl Ether	0.02		0.8	ND	U	g	0.7	ND	U	g	0.1	ND	U	g
Fluorene	0.03		1.1	1.1		g	1.0	ND	U	g	0.1	ND	U	g
4-Nitroaniline	0.1		4.7	ND	U	g	4.5	ND	U	g	0.40	ND	U	g
4,6-Dinitro-2-Methylphenol	0.09		3.2	ND	U	g	3.0	ND	U	g	0.27	ND	U	g
N-Nitrosodiphenylamine	0.08		3.0	ND	U	g	2.9	ND	U	g	0.3	ND	U	g
4-Bromophenyl Phenyl Ether	0.02		0.8	ND	U	g	0.7	ND	U	g	0.1	ND	U	g
Hexachlorobenzene	0.03		1.2	ND	U	g	1.1	ND	U	g	0.1	ND	U	g
Pentachlorophenol	0.03		1.2	ND	U	g	1.1	ND	U	g	0.10	ND	U	g
Phenanthrene	0.03		1.2	0.5	J		1.1	ND	U	g	0.1	0.2		g
Anthracene	0.04		1.6	ND	U	g	1.5	ND	U	g	0.1	ND	U	g
di-n-butyl Phthalate	0.06		2.2	ND	U	g	2.1	ND	U	g	0.2	ND	U	g
Fluroanthene	0.03		1.2	0.5	J		1.1	ND	U	g	0.1	ND	U	g
Pyrene	0.03		1.0	0.6	J		1.0	ND	U	g	0.1	0.03	J	
Butylbenzylphthalate	0.02		0.8	ND	U	g	0.8	ND	U	g	0.1	ND	U	g
3,3'-Dichlorobenzidine	0.06		2.1	ND	U	g	2.0	ND	U	g	0.2	ND	U	g
Benzo(a)anthracene	0.04		1.4	ND	U	g	1.3	ND	U	g	0.1	ND	U	g
bis(2-Ethylhexyl) Phthalate	0.04		1.4	ND	U	g	1.4	ND	U	g	0.1	ND	U	g
Chrysene	0.05		1.6	ND	U	g	1.5	ND	U	g	0.1	ND	U	g
di-n-Octylphthalate	0.02		0.8	ND	U	g	0.8	ND	U	g	0.1	ND	U	g
Benzo(b)fluoranthene	0.04		1.5	ND	U	g	1.5	ND	U	g	0.1	ND	U	g
Benzo(k)fluoranthene	0.07		2.7	ND	U	g	2.5	ND	U	g	0.2	ND	U	g
Benzo(a)pyrene	0.04		1.4	ND	U	g	1.3	ND	U	g	0.1	ND	U	g
Indeno(1,2,3-c,d)pyrene	0.03		1.0	ND	U	g	0.9	ND	U	g	0.1	ND	U	g
Dibenzo(a,h)anthracene	0.02		0.8	ND	U	g	0.7	ND	U	g	0.1	ND	U	g
Benzo(g,h,i)perylene	0.03		1.1	ND	U	g	1.1	ND	U	g	0.1	ND	U	g

Base: Kotzebue LRRS						Table 12.2.1.4								
Site: AOC5						Analytical Data Summary								
Extraction Method: EPA Method 3550						EPA Method 8270								
Analytical Method: EPA Method 8270														
Matrix: Soil														
Units: mg/kg														
			Environmental Samples											
		Field ID:	AOC05-SB5-2.0DL					AOC05-SB6-1.0				AOC05-SB7-1.0		
		Batch ID:		H574				H574				H574		
Parameters	MDL		PQL	Result	Validity	Comments	PQL	Result	Validity	Comments	PQL	Result	Validity	Comments
				Dilution 10										
Phenol	0.05		1.6	ND	U	g	2.0	ND	U	g	0.2	ND	U	g
bis(2-Chloroethyl) Ether	0.04		1.2	ND	U	g	1.5	ND	U	g	0.1	ND	U	g
2-Chlorophenol	0.07		2.2	ND	U	g	2.7	ND	U	g	0.2	ND	U	g
1,3-Dichlorobenzene	0.04		1.2	ND	U	k	1.4	ND	U	k	0.1	ND	U	g
1,4-Dichlorobenzene	0.03		0.8	ND	U	g	0.9	ND	U	g	0.1	ND	U	g
Benzyl Alcohol	0.05		1.6	ND	U	g	1.9	ND	U	g	0.2	ND	U	g
1,2-Dichlorobenzene	0.04		1.1	ND	U	g	1.4	ND	U	g	0.1	ND	U	g
2-Methylphenol	0.10		3.0	ND	U	g	3.7	ND	U	g	0.3	ND	U	g
2,2'-Oxybis (1-Chloropropane)	0.03		1.0	ND	U	g	1.2	ND	U	g	0.1	ND	U	g
4-Methylphenol	0.08		2.3	ND	U	g	2.9	ND	U	g	0.2	ND	U	g
N-Nitrosodi-n-propylamine	0.03		0.8	ND	U	g	1.0	ND	U	g	0.1	ND	U	g
Hexachloroethane	0.04		1.2	ND	U	g	1.5	ND	U	g	0.1	ND	U	g
Nitrobenzene	0.02		0.8	ND	U	g	0.9	ND	U	g	0.1	ND	U	g
Isophorone	0.03		1.0	ND	U	g	1.2	ND	U	g	0.1	ND	U	g
2-Nitrophenol	0.03		1.0	ND	U	g	2.0	ND	U	g	0.1	ND	U	g
2,4-Dimethylphenol	0.17		2.9	ND	U	g	3.5	ND	U	g	0.3	ND	U	g
Benzoic Acid	0.06		1.7	ND	U	g	3.0	ND	U	g	0.18	0.18	J	
bis(2-Chloroethoxy) Methane	0.04		1.1	ND	U	g	1.9	ND	U	g	0.1	ND	U	g
2,4-Dichlorophenol	0.04		1.3	ND	U	g	1.6	ND	U	g	0.1	ND	U	g
1,2,4-Trichlorobenzene	0.03		1.0	ND	U	g	1.2	ND	U	g	0.1	ND	U	g
Naphthalene	0.04		1.1	3.3		g	1.3	ND	U	g	0.1	ND	U	g
4-Chloroaniline	0.10		3.1	ND	U	g	3.8	ND	U	g	0.3	ND	U	g
Hexachlorobutadiene	0.03		1.0	ND	U	g	1.3	ND	U	g	0.1	ND	U	g
4-Chloro-3-Methylphenol	0.06		1.8	ND	U	g	2.2	ND	U	g	0.2	ND	U	g
2-Methylnaphthalene	0.03		1.0	6.4		g	1.3	ND	U	g	0.1	0.1	J	
Hexachlorocyclopentadiene	0.03		0.8	ND	U	g	0.9	ND	U	g	0.1	ND	U	g
2,4,6-Trichlorophenol	0.04		1.3	ND	U	g	1.6	ND	U	g	0.1	ND	U	g
2,4,5-Trichlorophenol	0.03		0.76	ND	U	g	0.94	ND	U	g	0.08	ND	U	g
2-Chloronaphthalene	0.03		1.0	ND	U	g	1.2	ND	U	g	0.1	ND	U	g
2-Nitroaniline	0.02		0.58	ND	U	g	0.71	ND	U	g	0.06	ND	U	g
Dimethyl Phthalate	0.04		1.1	ND	U	g	1.3	ND	U	g	0.1	ND	U	g
Acenaphthylene	0.04		1.2	ND	U	g	1.5	ND	U	g	0.1	ND	U	g
3-Nitroaniline	0.11		3.4	ND	U	g	4.1	ND	U	g	0.36	ND	U	g
Acenaphthene	0.03		0.9	ND	U	g	1.1	ND	U	g	0.1	ND	U	g
2,4-Dinitrophenol	0.09		2.7	ND	U	g	3.3	ND	U	g	0.29	ND	U	g
4-Nitrophenol	0.07		2.0	ND	U	g	6.9	ND	U	g	1.0	ND	U	g
Dibenzofuran	0.03		0.9	ND	U	g	1.2	ND	U	g	0.1	ND	U	g
2,6-Dinitrotoluene	0.04		1.3	ND	U	g	1.6	ND	U	g	0.1	ND	U	g

Base: Kotzebue LRRS						Table 12.2.1.4								
Site: AOC5						Analytical Data Summary								
Extraction Method: EPA Method 3550						EPA Method 8270								
Analytical Method: EPA Method 8270														
Matrix: Soil														
Units: mg/kg														
			Environmental Samples											
		Field ID:	AOC05-SB5-2.0DL					AOC05-SB6-1.0				AOC05-SB7-1.0		
		Batch ID:	H574					H574				H574		
Parameters	MDL	PQL	Result	Validity	Comments	PQL	Result	Validity	Comments	PQL	Result	Validity	Comments	
			Dilution 10											
2,4-Dinitrotoluene	0.02	0.7	ND	U	g	0.8	ND	U	g	0.1	ND	U	g	
Diethyl Phthalate	0.04	1.1	ND	U	g	1.3	ND	U	g	0.1	ND	U	g	
4-Chlorophenyl Phenyl Ether	0.02	0.7	ND	U	g	0.8	ND	U	g	0.1	ND	U	g	
Fluorene	0.03	0.9	0.3	J		1.1	ND	U	g	0.1	ND	U	g	
4-Nitroaniline	0.1	4.0	ND	U	g	4.9	ND	U	g	0.43	ND	U	g	
4,6-Dinitro-2-Methylphenol	0.09	2.7	ND	U	g	3.3	ND	U	g	0.29	ND	U	g	
N-Nitrosodiphenylamine	0.08	2.6	ND	U	g	3.1	ND	U	g	0.3	ND	U	g	
4-Bromophenyl Phenyl Ether	0.02	0.7	ND	U	g	0.8	ND	U	g	0.1	ND	U	g	
Hexachlorobenzene	0.03	1.0	ND	U	g	1.2	ND	U	g	0.1	ND	U	g	
Pentachlorophenol	0.03	1.0	ND	U	g	1.2	ND	U	g	0.11	ND	U	g	
Phenanthrene	0.03	1.0	ND	U	g	1.2	ND	U	g	0.1	ND	U	g	
Anthracene	0.04	1.3	ND	U	g	1.6	ND	U	g	0.1	ND	U	g	
di-n-butyl Phthalate	0.06	1.9	ND	U	g	2.3	ND	U	g	0.2	0.1	J		
Fluroanthene	0.03	1.0	ND	U	g	1.3	ND	U	g	0.1	ND	U	g	
Pyrene	0.03	0.9	ND	U	g	1.1	ND	U	g	0.1	ND	U	g	
Butylbenzylphthalate	0.02	0.7	ND	U	g	0.8	ND	U	g	0.1	2.9		g	
3,3'-Dichlorobenzidine	0.06	1.8	ND	U	g	2.1	ND	U	g	0.2	ND	U	g	
Benzo(a)anthracene	0.04	1.2	ND	U	g	1.4	ND	U	g	0.1	ND	U	g	
bis(2-Ethylhexyl) Phthalate	0.04	1.2	ND	U	g	1.5	2.9		g	0.1	0.1	J		
Chrysene	0.05	1.4	ND	U	g	1.7	ND	U	g	0.1	ND	U	g	
di-n-Octylphthalate	0.02	0.7	ND	U	g	0.9	ND	U	g	0.1	ND	U	g	
Benzo(b)fluoranthene	0.04	1.3	ND	U	g	1.6	ND	U	g	0.1	ND	U	g	
Benzo(k)fluoranthene	0.07	2.3	ND	U	g	2.8	ND	U	g	0.2	ND	U	g	
Benzo(a)pyrene	0.04	1.2	ND	U	g	1.5	ND	U	g	0.1	ND	U	g	
Indeno(1,2,3-c,d)pyrene	0.03	0.8	ND	U	g	1.0	ND	U	g	0.1	ND	U	g	
Dibenzo(a,h)anthracene	0.02	0.7	ND	U	g	0.8	ND	U	g	0.1	ND	U	g	
Benzo(g,h,i)perylene	0.03	1.0	ND	U	g	1.2	ND	U	g	0.1	ND	U	g	

Base: Kotzebue LRRS
Site: AOC5
Extraction Method: EPA Method 3550
Analytical Method: EPA Method 8270
Matrix: Soil
Units: mg/kg

Table 12.2.1.4
Analytical Data Summary
EPA Method 8270

			Environmental Samples							
		Field ID:		AOC05-SB8-1.0				AOC05-SB9-1.5		
		Batch ID:		H574				H574		
Parameters	MDL		PQL	Result	Validity	Comments	PQL	Result	Validity	Comments
Phenol	0.05		2.1	ND	U	g	0.2	ND	U	g
bis(2-Chloroethyl) Ether	0.04		1.5	ND	U	g	0.1	ND	U	g
2-Chlorophenol	0.07		2.8	ND	U	g	0.2	ND	U	g
1,3-Dichlorobenzene	0.04		1.5	ND	U	k	0.1	ND	U	k
1,4-Dichlorobenzene	0.03		1.0	ND	U	g	0.1	ND	U	g
Benzyl Alcohol	0.05		2.0	ND	U	g	0.2	ND	U	g
1,2-Dichlorobenzene	0.04		1.5	ND	U	g	0.1	ND	U	g
2-Methylphenol	0.10		3.8	ND	U	g	0.3	ND	U	g
2,2'-Oxybis (1-Chloropropane)	0.03		1.3	ND	U	g	0.1	ND	U	g
4-Methylphenol	0.08		3.0	ND	U	g	0.3	ND	U	g
N-Nitrosodi-n-propylamine	0.03		1.0	ND	U	g	0.1	ND	U	g
Hexachloroethane	0.04		1.5	ND	U	g	0.1	ND	U	g
Nitrobenzene	0.02		14	ND	U	g	0.1	ND	U	g
Isophorone	0.03		16	ND	U	g	0.1	ND	U	g
2-Nitrophenol	0.03		1.3	ND	U	g	0.1	ND	U	g
2,4-Dimethylphenol	0.17		13	ND	U	g	0.3	ND	U	g
Benzoic Acid	0.06		2.2	ND	U	g	0.20	ND	U	g
bis(2-Chloroethoxy) Methane	0.04		3.0	ND	U	g	0.1	ND	U	g
2,4-Dichlorophenol	0.04		1.7	ND	U	g	0.2	ND	U	g
1,2,4-Trichlorobenzene	0.03		1.3	ND	U	g	0.1	ND	U	g
Naphthalene	0.04		1.4	23		g	0.1	ND	U	g
4-Chloroaniline	0.10		4.0	ND	U	g	0.4	ND	U	g
Hexachlorobutadiene	0.03		1.3	ND	U	g	0.1	ND	U	g
4-Chloro-3-Methylphenol	0.06		2.9	ND	U	g	0.2	ND	U	g
2-Methylnaphthalene	0.03		1.3	57		g	0.1	ND	U	g
Hexachlorocyclopentadiene	0.03		1.0	ND	U	g	0.1	ND	U	g
2,4,6-Trichlorophenol	0.04		1.7	ND	U	g	0.1	ND	U	g
2,4,5-Trichlorophenol	0.03		0.98	ND	U	g	0.09	ND	U	g
2-Chloronaphthalene	0.03		1.3	ND	U	g	0.1	ND	U	g
2-Nitroaniline	0.02		1.5	ND	U	g	0.07	ND	U	g
Dimethyl Phthalate	0.04		1.4	ND	U	g	0.1	ND	U	g
Acenaphthylene	0.04		1.6	ND	U	g	0.1	ND	U	g
3-Nitroaniline	0.11		4.3	ND	U	g	0.38	ND	U	g
Acenaphthene	0.03		1.2	0.9	J		0.1	ND	U	g
2,4-Dinitrophenol	0.09		3.5	ND	U	g	0.31	ND	U	g
4-Nitrophenol	0.07		2.6	ND	U	g	0.23	ND	U	g
Dibenzofuran	0.03		1.2	1.2	J		0.1	ND	U	g
2,6-Dinitrotoluene	0.04		1.6	ND	U	g	0.1	ND	U	g

Base: Kotzebue LRRS						Table 12.2.1.4								
Site: AOC5						Analytical Data Summary								
Extraction Method: EPA Method 3550						EPA Method 8270								
Analytical Method: EPA Method 8270														
Matrix: Soil														
Units: mg/kg														
			Environmental Samples											
		Field ID:		AOC05-SB8-1.0				AOC05-SB9-1.5						
		Batch ID:		H574				H574						
Parameters	MDL		PQL	Result	Validity	Comments	PQL	Result	Validity	Comments				
2,4-Dinitrotoluene	0.02		0.9	ND	U	g	0.1	ND	U	g				
Diethyl Phthalate	0.04		1.4	ND	U	g	0.1	ND	U	g				
4-Chlorophenyl Phenyl Ether	0.02		0.8	ND	U	g	0.1	ND	U	g				
Fluorene	0.03		1.2	1.8		g	0.1	ND	U	g				
4-Nitroaniline	0.1		5.2	ND	U	g	0.46	ND	U	g				
4,6-Dinitro-2-Methylphenol	0.09		3.5	ND	U	g	0.31	ND	U	g				
N-Nitrosodiphenylamine	0.08		3.3	ND	U	g	0.3	ND	U	g				
4-Bromophenyl Phenyl Ether	0.02		0.9	ND	U	g	0.1	ND	U	g				
Hexachlorobenzene	0.03		1.3	ND	U	g	0.1	ND	U	g				
Pentachlorophenol	0.03		1.3	ND	U	g	0.11	ND	U	g				
Phenanthrene	0.03		1.3	1.0	J		0.1	ND	U	g				
Anthracene	0.04		1.7	ND	U	g	0.2	ND	U	g				
di-n-butyl Phthalate	0.06		2.4	ND	U	g	0.2	ND	U	g				
Fluroanthene	0.03		1.3	0.7	J		0.1	ND	U	g				
Pyrene	0.03		1.1	0.6	J		0.1	ND	U	g				
Butylbenzylphthalate	0.02		0.9	ND	U	g	0.1	ND	U	g				
3,3'-Dichlorobenzidine	0.06		2.2	ND	U	g	0.2	ND	U	g				
Benzo(a)anthracene	0.04		1.5	ND	U	g	0.1	ND	U	g				
bis(2-Ethylhexyl) Phthalate	0.04		1.6	0.7	J		0.1	ND	U	g				
Chrysene	0.05		1.8	ND	U	g	0.2	ND	U	g				
di-n-Octylphthalate	0.02		0.9	ND	U	g	0.1	ND	U	g				
Benzo(b)fluoranthene	0.04		1.7	ND	U	g	0.1	ND	U	g				
Benzo(k)fluoranthene	0.07		2.9	ND	U	g	0.3	ND	U	g				
Benzo(a)pyrene	0.04		1.5	ND	U	g	0.1	ND	U	g				
Indeno(1,2,3-c,d)pyrene	0.03		1.0	ND	U	g	0.1	ND	U	g				
Dibenzo(a,h)anthracene	0.02		0.9	ND	U	g	0.1	ND	U	g				
Benzo(g,h,i)perylene	0.03		1.2	ND	U	g	0.1	ND	U	g				

Base: Kotzebue LRRS
Site: AOC5
Extraction Method: EPA Method 3550
Analytical Method: EPA Method 8270
Matrix: Soil
Units: mg/kg

Table 12.2.1.4
Analytical Data Summary
EPA Method 8270

			Environmental Samples							
		Field ID:	AOC-05-SB11-1.0				AOC-05-SB11-1.0**			
		Batch ID:		H615				H615		
Parameters	MDL		PQL	Result	Validity	Comments	PQL	Result	Validity	Comments
Phenol	0.06		0.2	ND	U	g	0.2	ND	U	g
bis(2-Chloroethyl) Ether	0.04		0.1	ND	U	g	0.1	ND	U	g
2-Chlorophenol	0.08		0.3	ND	U	g	0.3	ND	U	g
1,3-Dichlorobenzene	0.04		0.1	ND	U	k	0.1	ND	U	k
1,4-Dichlorobenzene	0.03		0.1	ND	U	g	0.1	ND	U	g
Benzyl Alcohol	0.06		0.2	ND	U	g	0.2	ND	U	g
1,2-Dichlorobenzene	0.04		0.1	ND	U	g	0.1	ND	U	g
2-Methylphenol	0.11		0.4	ND	U	g	0.4	ND	U	g
2,2'-Oxybis (1-Chloropropane)	0.04		0.1	ND	U	g	0.1	ND	U	g
4-Methylphenol	0.09		0.3	ND	U	g	0.3	ND	U	g
N-Nitrosodi-n-propylamine	0.03		0.1	ND	U	g	0.1	ND	U	g
Hexachloroethane	0.04		0.1	ND	U	g	0.1	ND	U	g
Nitrobenzene	0.03		0.1	ND	U	g	0.1	ND	U	g
Isophorone	0.04		0.1	ND	U	g	0.1	ND	U	g
2-Nitrophenol	0.04		0.1	ND	U	g	0.2	ND	U	g
2,4-Dimethylphenol	0.19		0.3	ND	U	g	0.3	ND	U	g
Benzoic Acid	0.06		0.20	ND	U	g	0.26	ND	U	g
bis(2-Chloroethoxy) Methane	0.04		0.1	ND	U	g	0.1	ND	U	g
2,4-Dichlorophenol	0.05		0.2	ND	U	g	0.2	ND	U	g
1,2,4-Trichlorobenzene	0.04		0.1	ND	U	g	0.1	ND	U	g
Naphthalene	0.04		0.1	0.1	J		0.1	0.2		g
4-Chloroaniline	0.12		0.4	ND	U	g	0.4	ND	U	g
Hexachlorobutadiene	0.04		0.1	ND	U	g	0.1	ND	U	g
4-Chloro-3-Methylphenol	0.07		0.2	ND	U	g	0.2	ND	U	g
2-Methylnaphthalene	0.04		0.1	0.1		g	0.1	0.1	J	
Hexachlorocyclopentadiene	0.03		0.1	ND	U	g	0.1	ND	U	g
2,4,6-Trichlorophenol	0.05		0.2	ND	U	g	0.2	ND	U	g
2,4,5-Trichlorophenol	0.03		0.09	ND	U	g	0.09	ND	U	g
2-Chloronaphthalene	0.04		0.1	ND	U	g	0.1	ND	U	g
2-Nitroaniline	0.02		0.07	ND	U	g	0.44	ND	U	g
Dimethyl Phthalate	0.04		0.1	ND	U	g	0.1	ND	U	g
Acenaphthylene	0.05		0.1	ND	U	g	0.1	ND	U	g
3-Nitroaniline	0.12		0.56	ND	U	g	0.40	ND	U	g
Acenaphthene	0.03		0.1	0.1		g	0.1	0.1		g
2,4-Dinitrophenol	0.10		0.32	ND	U	g	0.32	ND	U	g
4-Nitrophenol	0.07		16	ND	U	g	2.4	ND	U	g
Dibenzofuran	0.03		0.1	ND	U	g	0.1	0.05	J	
2,6-Dinitrotoluene	0.05		0.2	ND	U	g	0.2	ND	U	g

** Reanalyzed.

Base: Kotzebue LRRS						Table 12.2.1.4								
Site: AOC5						Analytical Data Summary								
Extraction Method: EPA Method 3550						EPA Method 8270								
Analytical Method: EPA Method 8270														
Matrix: Soil														
Units: mg/kg														
			Environmental Samples											
		Field ID:	AOC-05-SB11-1.0				AOC-05-SB11-1.0RE							
		Batch ID:		H615				H615						
Parameters	MDL		PQL	Result	Validity	Comments	PQL	Result	Validity	Comments				
2,4-Dinitrotoluene	0.03		0.1	ND	U	g	0.1	ND	U	g				
Diethyl Phthalate	0.04		0.1	ND	U	g	0.1	ND	U	g				
4-Chlorophenyl Phenyl Ether	0.02		0.1	ND	U	g	0.1	ND	U	g				
Fluorene	0.03		0.1	0.05	J		0.1	0.1	J					
4-Nitroaniline	0.15		0.47	ND	U	g	0.47	0.45	J					
4,6-Dinitro-2-Methylphenol	0.10		0.32	ND	U	g	0.32	ND	U	g				
N-Nitrosodiphenylamine	0.09		0.3	ND	U	g	0.3	ND	U	g				
4-Bromophenyl Phenyl Ether	0.02		0.1	ND	U	g	0.1	ND	U	g				
Hexachlorobenzene	0.04		0.1	ND	U	g	0.1	ND	U	g				
Pentachlorophenol	0.04		0.12	ND	U	g	0.12	ND	U	g				
Phenanthrene	0.04		0.1	ND	U	g	0.1	ND	U	g				
Anthracene	0.05		0.2	ND	U	g	0.2	ND	U	g				
di-n-butyl Phthalate	0.07		0.2	ND	U	g	0.2	ND	U	g				
Fluroanthene	0.04		0.1	0.04	J		0.1	0.04	J					
Pyrene	0.03		0.1	0.1		g	0.1	0.1		g				
Butylbenzylphthalate	0.02		0.1	ND	U	g	0.1	ND	U	g				
3,3'-Dichlorobenzidine	0.06		0.2	ND	U	g	0.2	ND	U	g				
Benzo(a)anthracene	0.04		0.1	ND	U	g	0.1	ND	U	g				
bis(2-Ethylhexyl) Phthalate	0.05		0.1	0.9		g	0.1	0.9		g				
Chrysene	0.05		0.2	ND	U	g	0.2	ND	U	g				
di-n-Octylphthalate	0.03		0.1	ND	U	g	0.1	ND	U	g				
Benzo(b)fluoranthene	0.05		0.2	ND	U	g	0.2	ND	U	g				
Benzo(k)fluoranthene	0.08		0.3	ND	U	g	0.3	ND	U	g				
Benzo(a)pyrene	0.04		0.1	ND	U	g	0.1	ND	U	g				
Indeno(1,2,3-c,d)pyrene	0.03		0.1	ND	U	g	0.1	ND	U	g				
Dibenzo(a,h)anthracene	0.02		0.1	ND	U	g	0.1	ND	U	g				
Benzo(g,h,i)perylene	0.04		0.1	ND	U	g	0.1	ND	U	g				

ANALYTICAL DATA SUMMARY
AOC7-STEEL PILINGS

Base: Kotzebue LRRS						Table 2.1								
Site: AOC7						Analytical Data Summary								
Extraction Method: EPA Method 3550						Method AK102								
Analytical Method: Method AK102														
Matrix: Soil														
Units: mg/kg														
			Environmental Samples											
		Field ID:		AOC-07-SB1-1.0				AOC-07-SB2-1.0				AOC-07-SB3-1.0		
		Batch ID:		H599				H599				H599		
Parameters	MDL		PQL	Result	Validity	Comments	PQL	Result	Validity	Comments	PQL	Result	Validity	Comments
Diesel Hydrocarbons	0.9		3.1	1.2	J		5.3	130		g	3.6	130		g

Base: Kotzebue LRRS						Table 2.2							
Site: AOC7						Analytical Data Summary							
Extraction Method: EPA Method 3050						EPA Method 6010							
Analytical Method: EPA Method 6010													
Matrix: Soil													
Units: mg/kg													
			Environmental Samples										
		Field ID:		AOC-07-SB1-1.0				AOC-07-SB2-1.0					
		Batch ID:		H599				H599					
Parameters	MDL		PQL	Result	Validity	Comments	PQL	Result	Validity	Comments			
Aluminum	2.0		3	8300	J	a,d	6	9700	J	a,d			
Antimony	7		10	ND	UJ	c	20	ND	UJ	c			
Arsenic	6		10	5	J		20	ND	U	g			
Barium	0.9		2	100		g	3	170		g			
Beryllium	0.04		0.1	0.2		g	0.1	0.2		g			
Cadmium	1.2		2	ND	U	g	4	ND	U	g			
Calcium	4.4		8	52000		g	14	17000		g			
Chromium, total	0.39		0.7	24		g	1.2	26		g			
Cobalt	0.6		1	8		g	2	6		g			
Copper	0.16		0.3	13		g	0.5	13		g			
Iron	1.2		2	16000		g	4	16000		g			
Magnesium	2.7		5	13000		g	9	4500		g			
Manganese	0.6		1	300		g	2	200		g			
Molybdenum	0.44		0.8	ND	U	g	1.4	ND	U	g			
Nickel	1.2		2	36		g	4	24		g			
Potassium	32		60	420		g	100	660		g			
Selenium	7		10	9	J		20	ND	U	g			
Silver	0.26		0.5	ND	U	g	0.8	0.4	J				
Sodium	13		20	200		a	40	180		a			
Thallium	2.6		5	12		g	8	9		g			
Vanadium	0.25		0.4	31	J	c	0.8	25	J	c			
Zinc	0.45		0.9	30		g	1.6	36		g			

Base: Kotzebue LRRS					Table 2.3										
Site: AOC7					Analytical Data Summary										
Extraction Method: See below					EPA Method 7000										
Analytical Method: See below															
Matrix: Soil															
Units: mg/kg															
				Environmental Samples											
			Field ID:		AOC-07-SB1-1.0				AOC-07-SB2-1.0						
	EPA		Batch ID:		H599				H599						
Parameters	Method	MDL		PQL	Result	Validity	Comments	PQL	Result	Validity	Comments				
Lead	3050/7421	0.24		0.4	4.8*	J	c	0.8	46**	J	c				
Mercury	7471	0.018		0.03	0.01	B J	a	0.06	0.11		a				
* Sample diluted at a factor of 2.00.															
** Sample diluted at a factor of 10.00.															

Base: Kotzebue LRRS

Site: AOC7

Extraction Method: EPA Method 3550

Analytical Method: EPA Method 8081

Matrix: Soil

Units: mg/kg

Table 2.4
Analytical Data Summary
EPA Method 8081

Environmental Samples

Field ID:			AOC-07-SB1-1.0		AOC-07-SB1-1.0					AOC-07-SB2-1.0		AOC-07-SB2-1.0		
Batch ID:			H599		H599					H599		H599		
	DB-5	DB-608	DB-5	DB-5	DB-608	DB-608			DB-5	DB-5	DB-608	DB-608		
Parameters	MDL	MDL	PQL	Result	PQL	Result	Validity	Comments	PQL	Result	PQL	Result	Validity	Comments
alpha BHC	0.0001	0.0001	0.00022	ND	0.00020	ND	U	g	0.00037	ND	0.00033	ND	U	g
beta BHC	0.0001	0.0001	0.00034	ND	0.00031	ND	U	g	0.00056	0.0013	0.00052	ND	U	h
delta BHC	0.0001	0.0001	0.00034	0.0014	0.00026	ND	U	h	0.00058	ND	0.00043	ND	U	g
gamma BHC (Lindane)	0.0001	0.0001	0.00027	ND	0.00023	ND	U	g	0.00046	ND	0.00038	ND	U	g
Heptachlor	0.0001	0.0001	0.0003	ND	0.0003	ND	U	g	0.0005	ND	0.0005	ND	U	g
Aldrin	0.0001	0.0001	0.00022	ND	0.00028	ND	U	g	0.00036	ND	0.00047	ND	U	g
Heptachlor Epoxide	0.0001	0.0001	0.00027	0.0086	0.00034	ND	U	h	0.00046	0.00092	0.00058	ND	U	h
Endosulfan I	0.0001	0.0001	0.00040	ND	0.00040	ND	U	g	0.00066	0.010	0.00066	ND	U	h
Dieldrin	0.0001	0.0002	0.0004	ND	0.0005	ND	U	g	0.0007	ND	0.0009	ND	U	g
4,4'-DDE	0.0001	0.0002	0.0004	0.0015	0.0005	0.0013		g	0.0006	0.028	0.0009	0.031		g
Endrin	0.0001	0.0001	0.0003	ND	0.0004	ND	U	g	0.0006	0.0074	0.0006	0.0089		g
Endosulfan II	0.0002	0.0002	0.0006	ND	0.0006	ND	U	g	0.0009	ND	0.0009	ND	U	g
4,4'-DDD	0.0001	0.0001	0.0004	0.0022	0.0005	ND	U	h	0.0007	1.7 E*	0.0008	1.9 E*	J	n
Endosulfan Sulfate	0.0002	0.0002	0.0009	ND	0.0009	ND	U	g	0.0014	ND	0.0014	ND	U	g
4,4'-DDT	0.0002	0.0001	0.0008	0.0007	0.0005	0.0007	J		0.0013	0.73 E*	0.0008	0.76 E*	J	n
Methoxychlor	0.0008	0.0001	0.0030	ND	0.0038	ND	U	g	0.0050	ND	0.0063	ND	U	g
Endrin Aldehyde	0.0002	0.0003	0.0008	ND	0.0009	ND	U	g	0.0013	ND	0.0015	ND	U	g
gamma-Chlordane	0.0001	0.0001	0.00019	ND	0.00028	ND	U	g	0.00032	ND	0.00047	ND	U	g
alpha-Chlordane	0.0001	0.0001	0.00022	ND	0.00040	ND	U	g	0.00037	ND	0.00066	ND	U	g
Toxaphene	0.007	0.009	0.03	ND	0.03	ND	U	g	0.04	ND	0.05	ND	U	g
Arochlor 1016	0.009	0.009	0.03	ND	0.03	ND	U	g	0.05	ND	0.05	ND	U	g
Arochlor 1242	0.005	0.008	0.02	ND	0.03	ND	U	g	0.03	ND	0.04	ND	U	g
Arochlor 1248	0.004	0.005	0.01	ND	0.02	ND	U	g	0.02	ND	0.03	ND	U	g
Arochlor 1254	0.011	0.009	0.04	ND	0.03	ND	U	g	0.06	ND	0.05	ND	U	g
Arochlor 1260	0.009	0.010	0.03	ND	0.02	ND	U	g	0.05	ND	0.03	ND	U	g
Arochlor 1221	0.011	0.010	0.04	ND	0.03	ND	U	g	0.06	ND	0.06	ND	U	g
Arochlor 1232	0.005	0.005	0.02	ND	.00	ND	U	g	0.03	ND	0.0	ND	U	g

* Analyte detected above linear calibration range.

Base: Kotzebue LRRS						Table 2.4									
Site: AOC7						Analytical Data Summary									
Extraction Method: EPA Method 3550						EPA Method 8081									
Analytical Method: EPA Method 8081															
Matrix: Soil															
Units: mg/kg															
				Environmental Samples											
			Field ID:	AOC-07-SB2-1.0DL		AOC-07-SB2-1.0DL					AOC-07-SB3-1.0		AOC-07-SB3-1.0		
			Batch ID:		H599		H599				H599		H599		
	DB-5	DB-608		DB-5	DB-5	DB-608	DB-608			DB-5	DB-5	DB-608	DB-608		
Parameters	MDL	MDL		PQL	Result	PQL	Result	Validity	Comments	PQL	Result	PQL	Result	Validity	Comments
					Dilution 50		Dilution 50								
alpha BHC	0.0001	0.0001		0.019	ND	0.017	ND	U	g	0.00026	ND	0.00023	ND	U	g
beta BHC	0.0001	0.0001		0.028	ND	0.026	ND	U	g	0.00038	ND	0.00036	ND	U	g
delta BHC	0.0001	0.0001		0.029	ND	0.022	ND	U	g	0.00040	ND	0.00030	ND	U	g
gamma BHC (Lindane)	0.0001	0.0001		0.023	ND	0.019	ND	U	g	0.00031	ND	0.00026	ND	U	g
Heptachlor	0.0001	0.0001		0.026	ND	0.026	ND	U	g	0.0004	ND	0.0004	ND	U	g
Aldrin	0.0001	0.0001		0.018	ND	0.023	ND	U	g	0.00025	ND	0.00032	ND	U	g
Heptachlor Epoxide	0.0001	0.0001		0.023	ND	0.029	ND	U	g	0.00031	0.00092	0.00040	0.0027	J	n
Endosulfan I	0.0001	0.0001		0.033	ND	0.033	ND	U	g	0.00046	ND	0.00046	ND	U	g
Dieldrin	0.0001	0.0002		0.035	ND	0.044	ND	U	g	0.0005	ND	0.0006	ND	U	g
4,4'-DDE	0.0001	0.0002		0.029	0.20	0.044	0.17		g	0.0004	0.0071	0.0006	0.010		g
Endrin	0.0001	0.0001		0.029	0.058	0.030	ND	U	h	0.0004	0.0051	0.0004	0.0058	J	n
Endosulfan II	0.0002	0.0002		0.047	ND	0.046	ND	U	g	0.0007	ND	0.0006	ND	U	g
4,4'-DDD	0.0001	0.0001		0.035	0.98	0.042	1.0		g	0.0005	0.63 E*	0.0006	0.64 E*	J	n
Endosulfan Sulfate	0.0002	0.0002		0.072	ND	0.072	ND	U	g	0.0010	ND	0.0010	ND	U	g
4,4'-DDT	0.0002	0.0001		0.067	0.48	0.039	0.48		g	0.0009	0.051	0.0005	0.052		g
Methoxychlor	0.0008	0.0001		0.25	ND	0.32	ND	U	g	0.0034	ND	0.0043	ND	U	g
Endrin Aldehyde	0.0002	0.0003		0.065	ND	0.077	ND	U	g	0.0009	ND	0.0011	ND	U	g
gamma-Chlordane	0.0001	0.0001		0.016	ND	0.023	ND	U	g	0.00022	ND	0.00032	ND	U	g
alpha-Chlordane	0.0001	0.0001		0.019	ND	0.033	ND	U	g	0.00026	ND	0.00046	ND	U	g
Toxaphene	0.007	0.009		2.2	ND	2.7	ND	U	g	0.03	ND	0.04	ND	U	g
Arochlor 1016	0.009	0.009		2.6	ND	2.5	ND	U	g	0.04	ND	0.03	ND	U	g
Arochlor 1242	0.005	0.008		1.6	ND	2.2	ND	U	g	0.02	ND	0.03	ND	U	g
Arochlor 1248	0.004	0.005		1.0	ND	1.4	ND	U	g	0.01	ND	0.02	ND	U	g
Arochlor 1254	0.011	0.009		3.1	ND	2.7	ND	U	g	0.04	ND	0.04	ND	U	g
Arochlor 1260	0.009	0.010		2.5	ND	1.3	ND	U	g	0.03	ND	0.02	ND	U	g
Arochlor 1221	0.011	0.010		3.1	ND	2.8	ND	U	g	0.04	ND	0.04	ND	U	g
Arochlor 1232	0.005	0.005		1.3	ND	0.13	ND	U	g	0.02	ND	0.02	ND	U	g
* Analyte detected above linear calibration range.															

Base: Kotzebue LRRS
Site: AOC7
Extraction Method: EPA Method 3550
Analytical Method: EPA Method 8081
Matrix: Soil
Units: mg/kg

Table 2.4
Analytical Data Summary
EPA Method 8081

				Environmental Samples					
			Field ID:	AOC-07-SB3-1.0DL		AOC-07-SB3-1.0DL			
			Batch ID:		H599		H599		
	DB-5	DB-608		DB-5	DB-5	DB-608	DB-608		
Parameters	MDL	MDL		PQL	Result	PQL	Result	Validity	Comments
					Dilution 20		Dilution 20		
alpha BHC	0.0001	0.0001		0.0051	ND	0.0045	ND	U	g
beta BHC	0.0001	0.0001		0.0077	ND	0.0072	ND	U	g
delta BHC	0.0001	0.0001		0.0079	0.041	0.0059	ND	U	h
gamma BHC (Lindane)	0.0001	0.0001		0.0062	ND	0.0052	ND	U	g
Heptachlor	0.0001	0.0001		0.0071	ND	0.0071	ND	U	g
Aldrin	0.0001	0.0001		0.0050	ND	0.0064	ND	U	g
Heptachlor Epoxide	0.0001	0.0001		0.0062	0.037	0.0079	ND	U	h
Endosulfan I	0.0001	0.0001		0.0091	ND	0.0091	ND	U	g
Dieldrin	0.0001	0.0002		0.0097	ND	0.012	ND	U	g
4,4'-DDE	0.0001	0.0002		0.0080	0.049	0.012	0.059		g
Endrin	0.0001	0.0001		0.0080	0.019	0.0083	ND	U	h
Endosulfan II	0.0002	0.0002		0.013	0.030	0.013	ND	U	h
4,4'-DDD	0.0001	0.0001		0.0097	0.37	0.012	0.41		g
Endosulfan Sulfate	0.0002	0.0002		0.020	ND	0.020	ND	U	g
4,4'-DDT	0.0002	0.0001		0.018	0.084	0.011	0.079		g
Methoxychlor	0.0008	0.0001		0.069	ND	0.087	ND	U	g
Endrin Aldehyde	0.0002	0.0003		0.018	0.012	0.021	ND	U	h
gamma-Chlordane	0.0001	0.0001		0.0043	ND	0.0064	ND	U	g
alpha-Chlordane	0.0001	0.0001		0.0051	ND	0.0091	ND	U	g
Toxaphene	0.007	0.009		0.60	ND	0.73	ND	U	g
Arochlor 1016	0.009	0.009		0.71	ND	0.69	ND	U	g
Arochlor 1242	0.005	0.008		0.43	ND	0.61	ND	U	g
Arochlor 1248	0.004	0.005		0.28	ND	0.38	ND	U	g
Arochlor 1254	0.011	0.009		0.86	ND	0.73	ND	U	g
Arochlor 1260	0.009	0.010		0.70	ND	0.37	ND	U	g
Arochlor 1221	0.011	0.010		0.85	ND	0.76	ND	U	g
Arochlor 1232	0.005	0.005		0.37	ND	0.04	ND	U	g

Base: Kotzebue LRRS
Site: AOC7
Extraction Method: EPA Method 8260
Analytical Method: EPA Method 8260
Matrix: Soil
Units: mg/kg

Table 2.6
Analytical Data Summary
EPA Method 8260

			Environmental Samples											
		Field ID:		AOC-07-SB1-1.0				AOC-07-SB2-1.0				AOC-07-SB2-1.0*		
		Batch ID:		H599				H599				H599		
Parameters	MDL		PQL	Result	Validity	Comments	PQL	Result	Validity	Comments	PQL	Result	Validity	Comments
Chloromethane	0.0009		0.003	ND	U	g	0.004	ND	U	g	0.004	ND	U	g
Bromomethane	0.0008		0.003	ND	U	g	0.003	ND	U	g	0.003	ND	U	g
Vinyl Chloride	0.0010		0.003	ND	U	g	0.004	ND	U	g	0.004	ND	U	g
Chloroethane	0.0010		0.003	ND	U	g	0.004	ND	U	g	0.004	ND	U	g
Methylene Chloride	0.0009		0.003	0.002	B J	a	0.004	0.004	B	a	0.004	0.003	B J	a
Acetone	0.0039		0.01	0.01	J		0.02	0.03		g	0.02	0.02	J	
Carbon Disulfide	0.0005		0.002	ND	U	g	0.002	ND	U	g	0.002	ND	U	g
1,1-Dichloroethene	0.0012		0.004	ND	U	g	0.005	ND	U	g	0.005	ND	U	g
1,1-Dichloroethane	0.0004		0.001	ND	U	g	0.002	ND	U	g	0.002	ND	U	g
trans-1,2-Dichloroethene	0.0009		0.003	ND	U	g	0.004	ND	U	g	0.004	ND	U	g
cis-1,2-Dichloroethylene	0.0011		0.004	ND	U	g	0.005	ND	U	g	0.005	ND	U	g
Chloroform	0.0005		0.002	ND	U	g	0.002	ND	U	g	0.002	ND	U	g
1,2-Dichloroethane	0.0005		0.002	ND	U	g	0.002	ND	U	g	0.002	ND	U	g
Methyl Ethyl Ketone (2-butanone)	0.0025		0.008	ND	U	g	0.010	0.008	J		0.011	ND	U	g
1,1,1-Trichloroethane	0.0004		0.001	ND	U	g	0.002	ND	U	g	0.002	ND	U	g
Carbon Tetrachloride	0.0010		0.003	ND	U	g	0.004	ND	U	g	0.004	ND	U	g
Vinyl Acetate	0.0016		0.005	ND	U	g	0.007	ND	U	g	0.007	ND	U	g
Bromodichloromethane	0.0006		0.002	ND	U	g	0.003	ND	U	g	0.003	ND	U	g
1,2-Dichloropropane	0.0008		0.003	ND	U	g	0.004	ND	U	g	0.004	ND	U	g
cis-1,3-Dichloropropene	0.0007		0.002	ND	U	g	0.003	ND	U	g	0.003	ND	U	g
Trichloroethylene (tce)	0.0005		0.002	ND	U	g	0.002	ND	U	g	0.002	ND	U	g
Dibromochloromethane	0.0003		0.001	ND	U	g	0.001	ND	U	g	0.001	ND	U	g
1,1,2-Trichloroethane	0.0007		0.002	ND	U	g	0.003	ND	U	g	0.003	ND	U	g
Benzene	0.0005		0.0016	ND	U	g	0.0020	ND	U	g	0.0020	ND	U	g

* Reanalyzed.

Base: Kotzebue LRRS						Table 2.5								
Site: AOC7						Analytical Data Summary								
Extraction Method: EPA Method 8260						EPA Method 8260								
Analytical Method: EPA Method 8260														
Matrix: Soil														
Units: mg/kg														
			Environmental Samples											
		Field ID:		AOC-07-SB1-1.0				AOC-07-SB2-1.0				AOC-07-SB2-1.0*		
		Batch ID:		H599				H599				H599		
Parameters	MDL		PQL	Result	Validity	Comments	PQL	Result	Validity	Comments	PQL	Result	Validity	Comments
trans-1,3-Dichloropropene	0.0015		0.002	ND	U	g	0.002	ND	U	g	0.002	ND	U	g
2-Chloroethyl Vinyl Ether	0.0006		0.002	ND	U	g	0.003	ND	U	g	0.003	ND	U	g
Bromoform	0.0013		0.004	ND	U	g	0.005	ND	U	g	0.005	ND	U	g
Methyl Isobutyl Ketone	0.0015		0.005	ND	U	g	0.006	ND	U	g	0.006	ND	U	g
2-Hexanone	0.0027		0.009	ND	U	g	0.012	ND	U	g	0.012	ND	U	g
Tetrachloroethylene (pce)	0.0009		0.003	ND	U	g	0.004	ND	U	g	0.004	ND	U	g
1,1,2,2-Tetrachloroethane	0.0009		0.0030	ND	U	g	0.0039	ND	U	g	0.0039	ND	U	g
Toluene	0.0009		0.0030	ND	U	g	0.0039	ND	U	g	0.0039	0.0014	J	
Chlorobenzene	0.0007		0.002	ND	U	g	0.003	ND	U	g	0.003	ND	U	g
Ethylbenzene	0.0004		0.0014	ND	U	g	0.0018	ND	U	g	0.0018	ND	U	g
Styrene	0.0006		0.002	ND	U	g	0.003	ND	U	g	0.003	ND	U	g
1,1,2-Trichloro-1,2,2-trifluoroethane	0.0007		0.002	ND	U	g	0.003	ND	U	g	0.003	ND	U	g
Xylenes, total	0.0020		0.007	ND	U	g	0.009	ND	U	g	0.009	ND	U	g
1,1,1,2-Tetrachloroethane	0.0010		0.003	ND	U	g	0.004	ND	U	g	0.004	ND	U	g
1,2,3-Trichloropropane	0.0023		0.008	ND	U	g	0.010	ND	U	g	0.010	ND	U	g
Bromochloromethane	0.0007		0.002	ND	U	g	0.003	ND	U	g	0.003	ND	U	g
1-Chlorohexane	0.0007		0.002	ND	U	g	0.003	ND	U	g	0.003	ND	U	g
Bromobenzene	0.0007		0.0024	ND	U	g	0.0031	ND	U	g	0.0031	ND	U	g
* Reanalyzed.														

Base: Kotzebue LRRS

Site: AOC7

Extraction Method: EPA Method 8260

Analytical Method: EPA Method 8260

Matrix: Soil

Units: mg/kg

Table 2.6
Analytical Data Summary
EPA Method 8260

Environmental Samples

		Field ID:	AOC-07-SB3-1.0			
		Batch ID:	H599			
Parameters	MDL	PQL	Result	Validity	Comments	
Chloromethane	0.0009	0.004	ND	U	g	
Bromomethane	0.0008	0.004	ND	U	g	
Vinyl Chloride	0.0010	0.004	ND	U	g	
Chloroethane	0.0010	0.004	ND	U	g	
Methylene Chloride	0.0009	0.004	0.004	B	a	
Acetone	0.0039	0.02	0.02	J		
Carbon Disulfide	0.0005	0.002	ND	U	g	
1,1-Dichloroethene	0.0012	0.005	ND	U	g	
1,1-Dichloroethane	0.0004	0.002	ND	U	g	
trans-1,2-Dichloroethene	0.0009	0.004	ND	U	g	
cis-1,2-Dichloroethylene	0.0011	0.005	ND	U	g	
Chloroform	0.0005	0.002	ND	U	g	
1,2-Dichloroethane	0.0005	0.002	ND	U	g	
Methyl Ethyl Ketone (2-butanone)	0.0025	0.011	ND	U	g	
1,1,1-Trichloroethane	0.0004	0.002	ND	U	g	
Carbon Tetrachloride	0.0010	0.004	ND	U	g	
Vinyl Acetate	0.0016	0.007	ND	U	g	
Bromodichloromethane	0.0006	0.003	ND	U	g	
1,2-Dichloropropane	0.0008	0.004	ND	U	g	
cis-1,3-Dichloropropene	0.0007	0.003	ND	U	g	
Trichloroethylene (tce)	0.0005	0.002	ND	U	g	
Dibromochloromethane	0.0003	0.002	ND	U	g	
1,1,2-Trichloroethane	0.0007	0.003	ND	U	g	
Benzene	0.0005	0.0021	ND	U	g	

Base: Kotzebue LRRS						Table 2.6							
Site: AOC7						Analytical Data Summary							
Extraction Method: EPA Method 8260						EPA Method 8260							
Analytical Method: EPA Method 8260													
Matrix: Soil													
Units: mg/kg													
			Environmental Samples										
		Field ID:		AOC-07-SB3-1.0									
		Batch ID:		H599									
Parameters	MDL		PQL	Result	Validity	Comments							
trans-1,3-Dichloropropene	0.0015		0.002	ND	U	g							
2-Chloroethyl Vinyl Ether	0.0006		0.003	ND	U	g							
Bromoform	0.0013		0.006	ND	U	g							
Methyl Isobutyl Ketone	0.0015		0.007	ND	U	g							
2-Hexanone	0.0027		0.012	ND	U	g							
Tetrachloroethylene (pce)	0.0009		0.004	ND	U	g							
1,1,2,2-Tetrachloroethane	0.0009		0.0040	ND	U	g							
Toluene	0.0009		0.0040	ND	U	g							
Chlorobenzene	0.0007		0.003	ND	U	g							
Ethylbenzene	0.0004		0.0019	ND	U	g							
Styrene	0.0006		0.003	ND	U	g							
1,1,2-Trichloro-1,2,2-trifluoroethane	0.0007		0.003	ND	U	g							
Xylenes, total	0.0020		0.009	ND	U	g							
1,1,1,2-Tetrachloroethane	0.0010		0.004	ND	U	g							
1,2,3-Trichloropropane	0.0023		0.010	ND	U	g							
Bromochloromethane	0.0007		0.003	ND	U	g							
Bromobenzene	0.0007		0.0032	ND	U	g							

Base: Kotzebue LRRS

Site: AOC7

Extraction Method: EPA Method 3550

Analytical Method: EPA Method 8270

Matrix: Soil

Units: mg/kg

Table 2.6

Analytical Data Summary

EPA Method 8270

			Environmental Samples											
		Field ID:		AOC-07-SB1-1.0				AOC-07-SB2-1.0				AOC-07-SB3-1.0		
		Batch ID:		H599				H599				i599		
Parameters	MDL		PQL	Result	Validity	Comments	PQL	Result	Validity	Comments	PQL	Result	Validity	Comments
Phenol	0.05		0.2	ND	U	g	0.3	ND	U	g	0.2	ND	U	g
bis(2-Chloroethyl) Ether	0.04		0.1	ND	U	g	0.2	ND	U	g	0.2	ND	U	g
2-Chlorophenol	0.07		0.3	ND	U	g	0.4	ND	U	g	0.3	ND	U	g
1,3-Dichlorobenzene	0.04		0.1	ND	U	g	0.2	ND	U	g	0.2	ND	J	g
1,4-Dichlorobenzene	0.03		0.1	ND	U	g	0.1	ND	U	g	0.1	ND	U	g
Benzyl Alcohol	0.05		0.2	ND	U	g	0.3	ND	U	g	0.2	ND	U	g
1,2-Dichlorobenzene	0.04		0.1	ND	U	g	0.2	ND	U	g	0.2	ND	U	g
2-Methylphenol	0.10		0.3	ND	U	g	0.6	ND	U	g	0.4	ND	U	g
2,2'-Oxybis (1-Chloropropane)	0.03		0.1	ND	U	g	0.2	ND	U	g	0.1	ND	U	g
4-Methylphenol	0.08		0.3	ND	U	g	0.5	ND	U	g	0.3	ND	U	g
N-Nitrosodi-n-propylamine	0.03		0.1	ND	U	g	0.2	ND	U	g	0.1	ND	U	g
Hexachloroethane	0.04		0.1	ND	U	g	0.2	ND	U	g	0.2	ND	U	g
Nitrobenzene	0.02		0.1	ND	U	g	0.1	ND	U	g	0.1	ND	U	g
Isophorone	0.03		0.1	ND	U	g	0.2	ND	U	g	0.1	ND	U	g
2-Nitrophenol	0.03		0.1	ND	U	g	0.2	ND	U	g	0.1	ND	U	g
2,4-Dimethylphenol	0.17		0.3	ND	U	g	0.6	ND	U	g	0.4	ND	U	g
Benzoic Acid	0.06		0.20	ND	U	g	0.34	ND	U	g	0.23	ND	U	g
bis(2-Chloroethoxy) Methane	0.04		0.1	ND	U	g	0.2	ND	U	g	0.1	ND	U	g
2,4-Dichlorophenol	0.04		0.2	ND	U	g	0.3	ND	U	g	0.2	ND	U	g
1,2,4-Trichlorobenzene	0.03		0.1	ND	U	g	0.2	ND	U	g	0.1	ND	U	g
Naphthalene	0.04		0.1	ND	U	g	0.2	ND	U	g	0.1	ND	U	g
4-Chloroaniline	0.10		0.4	ND	U	g	0.6	ND	U	g	0.4	ND	U	g
Hexachlorobutadiene	0.03		0.1	ND	U	g	0.2	ND	U	g	0.1	ND	U	g
4-Chloro-3-Methylphenol	0.06		0.2	ND	U	g	0.3	ND	U	g	0.2	ND	U	g
2-Methylnaphthalene	0.03		0.1	ND	U	g	0.2	ND	U	g	0.1	ND	U	g
Hexachlorocyclopentadiene	0.03		0.1	ND	U	g	0.2	ND	U	g	0.1	ND	U	g
2,4,6-Trichlorophenol	0.04		0.1	ND	U	g	0.3	ND	U	g	0.2	ND	U	g
2,4,5-Trichlorophenol	0.03		0.09	ND	U	g	0.15	ND	U	g	0.10	ND	U	g
2-Chloronaphthalene	0.03		0.1	ND	U	g	0.2	ND	U	g	0.1	ND	U	g
2-Nitroaniline	0.02		0.07	ND	U	g	0.11	ND	U	g	0.08	ND	U	g
Dimethyl Phthalate	0.04		0.1	ND	U	g	0.2	ND	U	g	0.1	ND	U	g
Acenaphthylene	0.04		0.1	ND	U	g	0.2	ND	U	g	0.2	ND	U	g
3-Nitroaniline	0.11		0.39	ND	U	g	0.66	ND	U	g	0.44	ND	U	g
Acenaphthene	0.03		0.1	ND	U	g	0.2	ND	U	g	0.1	ND	U	g
2,4-Dinitrophenol	0.09		0.31	ND	U	g	0.53	ND	U	g	0.36	ND	U	g
4-Nitrophenol	0.07		0.23	ND	U	g	0.39	ND	U	g	0.27	ND	U	g
Dibenzofuran	0.03		0.1	ND	U	g	0.2	ND	U	g	0.1	ND	U	g
2,6-Dinitrotoluene	0.04		0.1	ND	U	g	0.3	ND	U	g	0.2	ND	U	g

Base: Kotzebue LRRS
Site: AOC7
Extraction Method: EPA Method 3550
Analytical Method: EPA Method 8270
Matrix: Soil
Units: mg/kg

Table 2.6
Analytical Data Summary
EPA Method 8270

			Environmental Samples												
		Field ID:	AOC-07-SB1-1.0					AOC-07-SB2-1.0				AOC-07-SB3-1.0			
		Batch ID:	H599					H599				H599			
Parameters	MDL		PQL	Result	Validity	Comments	PQL	Result	Validity	Comments	PQL	Result	Validity	Comments	
2,4-Dinitrotoluene	0.02		0.1	ND	U	g	0.1	ND	U	g	0.1	ND	U	g	
Diethyl Phthalate	0.04		0.1	ND	U	g	0.2	ND	U	g	0.1	ND	U	g	
4-Chlorophenyl Phenyl Ether	0.02		0.1	ND	U	g	0.1	ND	U	g	0.1	ND	U	g	
Fluorene	0.03		0.1	ND	U	g	0.2	ND	U	g	0.1	ND	U	g	
4-Nitroaniline	0.13		0.47	ND	U	g	0.79	ND	U	g	0.53	ND	U	g	
4,6-Dinitro-2-Methylphenol	0.09		0.31	ND	U	g	0.53	ND	U	g	0.36	ND	U	g	
N-Nitrosodiphenylamine	0.08		0.3	ND	U	g	0.5	ND	U	g	0.3	ND	U	g	
4-Bromophenyl Phenyl Ether	0.02		0.1	ND	U	g	0.1	ND	U	g	0.1	ND	U	g	
Hexachlorobenzene	0.03		0.1	ND	U	g	0.2	ND	U	g	0.1	ND	U	g	
Pentachlorophenol	0.03		0.12	ND	U	g	0.20	ND	U	g	0.13	ND	U	g	
Phenanthrene	0.03		0.1	ND	U	g	0.2	ND	U	g	0.1	ND	U	g	
Anthracene	0.04		0.2	ND	U	g	0.3	ND	U	g	0.2	ND	U	g	
di-n-butyl Phthalate	0.06		0.2	ND	U	g	0.4	ND	U	g	0.3	ND	U	g	
Fluroanthene	0.03		0.1	ND	U	g	0.2	ND	U	g	0.1	ND	U	g	
Pyrene	0.03		0.1	ND	U	g	0.2	ND	U	g	0.1	ND	U	g	
Butylbenzylphthalate	0.02		0.1	ND	U	g	0.1	ND	U	g	0.1	ND	U	g	
3,3'-Dichlorobenzidine	0.06		0.2	ND	U	g	0.3	ND	U	g	0.2	ND	U	g	
Benzo(a)anthracene	0.04		0.1	ND	U	g	0.2	ND	U	g	0.2	ND	U	g	
bis(2-Ethylhexyl) Phthalate	0.04		0.1	ND	U	g	0.2	1.2		g	0.2	0.1	J		
Chrysene	0.05		0.2	ND	U	g	0.3	ND	U	g	0.2	ND	U	g	
di-n-Octylphthalate	0.02		0.1	ND	U	g	0.1	ND	U	g	0.1	ND	U	g	
Benzo(b)fluoranthene	0.04		0.2	ND	U	g	0.3	ND	U	g	0.2	ND	U	g	
Benzo(k)fluoranthene	0.07		0.3	ND	U	g	0.4	ND	U	g	0.3	ND	U	g	
Benzo(a)pyrene	0.04		0.1	ND	U	g	0.2	ND	U	g	0.2	ND	U	g	
Indeno(1,2,3-c,d)pyrene	0.03		0.1	ND	U	g	0.2	ND	U	g	0.1	ND	U	g	
Dibenzo(a,h)anthracene	0.02		0.1	ND	U	g	0.1	ND	U	g	0.1	ND	U	g	
Benzo(g,h,i)perylene	0.03		0.1	ND	U	g	0.2	ND	U	g	0.1	ND	U	g	

Base: Kotzebue LRRS						Table 2.7								
Site: AOC7						Analytical Data Summary								
Extraction Method: Not Applicable						EPA Method 9060								
Analytical Method: EPA Method 9060														
Matrix: Soil														
Units: mg/kg														
			Environmental Samples											
		Field ID:	AOC-070GT6-T-1.0											
		Batch ID:		H671										
Parameters	MDL		PQL	Result	Validity	Comments								
Total Organic Carbon	158		560	30500		g								

ANALYTICAL DATA SUMMARY
AOC8-WHITE ALICE GARAGE

Base: Kotzebue LRRS						Table 2.1								
Site: AOC8						Analytical Data Summary								
Extraction Method: Method AK101						Method AK101								
Analytical Method: Method AK101														
Matrix: Soil														
Units: mg/kg														
			Environmental Samples											
		Field ID:		AOC-08-SB1-1.5				AOC-08-SB2-1.5				AOC-08-SB3-3.5		
		Batch ID:		H590				H590				H590		
Parameters	MDL		PQL	Result	Validity	Comments	PQL	Result	Validity	Comments	PQL	Result	Validity	Comments
Gasoline Hydrocarbons	1.7		5.7	ND	U	g	6.0	120	J	b	5.9	71	J	b

Base: Kotzebue LRRS						Table 2.1							
Site: AOC8						Analytical Data Summary							
Extraction Method: Method AK101						Method AK101							
Analytical Method: Method AK101													
Matrix: Soil													
Units: mg/kg													
			Environmental Samples										
		Field ID:		AOC8-SB4-1.0									
		Batch ID:		H886									
Parameters	MDL		PQL	Result	Validity	Comments							
Gasoline Hydrocarbons	1.7		6.9	4.6	J								

Base: Kotzebue LRRS						Table 2.2								
Site: AOC8						Analytical Data Summary								
Extraction Method: EPA Method 3550						Method AK102								
Analytical Method: Method AK102														
Matrix: Soil														
Units: mg/kg														
			Environmental Samples											
		Field ID:		AOC-08-SB1-1.5				AOC-08-SB2-1.5				AOC-08-SB2-1.5DL		
		Batch ID:		H590				H590				H590		
Parameters	MDL		PQL	Result	Validity	Comments	PQL	Result	Validity	Comments	PQL	Result	Validity	Comments
												Dilution 10		
Diesel Hydrocarbons	0.9		2.9	150		g	3.0	940 E*	J	n	30	1100		g
* Analyte detected above linear calibration range.														

Base: Kotzebue LRRS						Table 2.2	
Site: AOC8						Analytical Data Summary	
Extraction Method: EPA Method 3550						Method AK102	
Analytical Method: Method AK102							
Matrix: Soil							
Units: mg/kg							
			Environmental Samples				
		Field ID:		AOC-08-SB3-3.5			
		Batch ID:		H590			
Parameters	MDL		PQL	Result	Validity	Comments	
Diesel Hydrocarbons	0.9		2.9	3.3		g	

Base: Kotzebue LRRS						Table 2.2							
Site: AOC8						Analytical Data Summary							
Extraction Method: EPA Method 3550						Method AK102							
Analytical Method: Method AK102													
Matrix: Soil													
Units: mg/kg													
			Environmental Samples										
		Field ID:		AOC8-SB4-1.0				AOC8-SB4-1.0DL					
		Batch ID:		H886				H886					
Parameters	MDL		PQL	Result	Validity	Comments	PQL	Result	Validity	Comments			
								Dilution 10					
Diesel Hydrocarbons	0.9		8.5	3600 E*	J	n	85	3500		g			
* Analyte detected above linear calibration range.													

Base: Kotzebue LRRS				Table 2.3						
Site: AOC8				Analytical Data Summary						
Extraction Method: EPA Method 3050				EPA Method 6010						
Analytical Method: EPA Method 6010										
Matrix: Soil										
Units: mg/kg										
			Environmental Samples							
		Field ID:		AOC-08-SB1-1.5				AOC-08-SB3-3.5		
		Batch ID:		H590				H590		
Parameters	MDL		PQL	Result	Validity	Comments	PQL	Result	Validity	Comments
				Dilution 2.00				Dilution 2.00		
Aluminum	1.0		3	10000	J	a,c,k	3	8900	J	a,c,k
Antimony	3		10	ND	UJ	c	10	7	J	c
Arsenic	3		10	10		g	10	6		g
Barium	0.4		1	140		g	1	100		g
Beryllium	0.02		0.1	0.2		g	0.1	0.1		g
Cadmium	0.6		2	ND	U	g	2	ND	U	g
Calcium	2.2		7	54000	J	a,c,k	7	76000	J	a,c,k
Chromium, total	0.19		0.6	26	J	a,c	0.6	15	J	a,c
Cobalt	0.3		1	8		g	1	7		g
Copper	0.08		0.2	14		a,k	0.3	13		a, k
Iron	0.6		2	18000	J	c,k	2	15000	J	c, k
Magnesium	1.4		4	16000	J	c	4	14000	J	c
Manganese	0.3		1	340	J	c	1	280	J	c
Molybdenum	0.22		0.7	ND	U	g	0.7	ND	U	g
Nickel	0.6		2	42		g	2	29		g
Potassium	16		50	340		g	50	360		g
Selenium	3		10	9		g	10	9		g
Silver	0.13		0.4	ND	U	g	0.4	ND	U	g
Sodium	7		20	190		a,k	20	250		a,k
Thallium	1.3		4	12		g	4	10		g
Vanadium	0.12		0.4	35	J	c	0.4	32	J	c
Zinc	0.23		0.8	39		a,k	0.8	33		a,k

Base: Kotzebue LRRS					Table 2.4						
Site: AOC8					Analytical Data Summary						
Extraction Method: See below					EPA Method 7000						
Analytical Method: See below											
Matrix: Soil											
Units: mg/kg											
				Environmental Samples							
			Field ID:		AOC-08-SB1-1.5				AOC-08-SB3-3.5		
	EPA		Batch ID:		H590				H590		
Parameters	Method	MDL		PQL	Result	Validity	Comments	PQL	Result	Validity	Comments
Lead	3050/7421	0.12		0.4	7.6*		k	0.4	11*		k
Mercury	7471	0.009		0.03	0.01	B	k	0.03	0.01	B	k
* Sample diluted at a factor of 5.00.											

Base: Kotzebue LRRS

Site: AOC8

Extraction Method: EPA Method 3550

Analytical Method: EPA Method 8081

Matrix: Soil

Units: mg/kg

Table 2.6

Analytical Data Summary

EPA Method 8081

			Environmental Samples												
			Field ID:	AOC-08-SB1-1.5		AOC-08-SB1-1.5				AOC-08-SB2-1.5		AOC-08-SB2-1.5			
			Batch ID:	H590		H590				H590		H590			
	DB-5	DB-608	DB-5	DB-5	DB-608	DB-608			DB-5	DB-5	DB-608	DB-608			
Parameters	MDL	MDL	PQL	Result	PQL	Result	Validity	Comments	PQL	Result	PQL	Result	Validity	Comments	
alpha BHC	0.0001	0.0001	0.00021	ND	0.00018	ND	U	g	0.00021	ND	0.00019	ND	U	g	
beta BHC	0.0001	0.0001	0.00031	0.0024	0.00029	ND	U	h	0.00032	0.0027	0.00030	ND	U	h	
delta BHC	0.0001	0.0001	0.00032	ND	0.00024	ND	U	g	0.00033	ND	0.00025	ND	U	g	
gamma BHC (Lindane)	0.0001	0.0001	0.00026	0.0018	0.00021	ND	U	h	0.00026	ND	0.00022	ND	U	g	
Heptachlor	0.0001	0.0001	0.0003	ND	0.0003	ND	U	g	0.0003	ND	0.0003	ND	U	g	
Aldrin	0.0001	0.0001	0.00020	0.00051	0.00026	0.00038	J	n	0.00021	ND	0.00027	ND	U	g	
Heptachlor Epoxide	0.0001	0.0001	0.00026	0.0027	0.00032	ND	U	h	0.00026	0.0045	0.00033	ND	U	h	
Endosulfan I	0.0001	0.0001	0.00037	ND	0.00037	ND	U	g	0.00038	ND	0.00038	ND	U	g	
Dieldrin	0.0001	0.0002	0.0004	0.0057	0.0005	0.0010	J	n	0.0004	0.0045	0.0005	0.0050		g	
4,4'-DDE	0.0001	0.0002	0.0003	0.0015	0.0005	0.0015		g	0.0003	0.0019	0.0005	0.0017		g	
Endrin	0.0001	0.0001	0.0003	0.0080	0.0003	0.030	J	n	0.0003	0.0080	0.0003	0.024	J	n	
Endosulfan II	0.0002	0.0002	0.0005	ND	0.0005	ND	U	g	0.0005	ND	0.0005	ND	U	g	
4,4'-DDD	0.0001	0.0001	0.0004	ND	0.0005	ND	U	g	0.0004	ND	0.0005	ND	U	g	
Endosulfan Sulfate	0.0002	0.0002	0.0008	ND	0.0008	ND	U	g	0.0008	ND	0.0008	ND	U	g	
4,4'-DDT	0.0002	0.0001	0.0008	0.0069	0.0004	0.028	J	n	0.0008	0.016	0.0004	0.034	J	n	
Methoxychlor	0.0008	0.0011	0.0028	3.4	0.0035	0.022	J	n	0.0029	3.5	0.0037	0.034	J	n	
Endrin Aldehyde	0.0002	0.0003	0.0007	ND	0.0009	ND	U	g	0.0008	ND	0.0009	ND	U	g	
gamma-Chlordane	0.0001	0.0001	0.00018	ND	0.00026	ND	U	g	0.00018	0.0019	0.00027	0.0024	J	n	
alpha-Chlordane	0.0001	0.0001	0.00021	ND	0.00037	ND	U	g	0.00021	0.00053	0.00038	ND	U	h	
Toxaphene	0.007	0.009	0.02	ND	0.03	ND	U	g	0.03	ND	0.03	ND	U	g	
Arochlor 1016	0.009	0.009	0.03	ND	0.03	ND	U	g	0.03	ND	0.03	ND	U	g	
Arochlor 1242	0.005	0.008	0.02	ND	0.02	ND	U	g	0.02	ND	0.03	ND	U	g	
Arochlor 1248	0.004	0.005	0.01	ND	0.02	ND	U	g	0.01	ND	0.02	ND	U	g	
Arochlor 1254	0.011	0.009	0.03	0.09*	0.03	0.09*	U	g	0.04	ND	0.03	ND	U	g	
Arochlor 1260	0.009	0.010	0.03	0.35	0.01	0.34		g	0.03	0.54	0.02	0.44		g	
Arochlor 1221	0.011	0.010	0.03	ND	0.03	ND	U	g	0.04	ND	0.03	ND	U	g	
Arochlor 1232	0.005	0.005	0.01	ND	0.01	ND	U	g	0.02	ND	0.00	ND	U	g	

* In the opinion of the analyst, the relevant compound may not be present at or below the indicated concentration due to interfering background contamination that prevents a positive or negative spectral confirmation.

Base: Kotzebue LRRS					Table 2.6										
Site: AOC8					Analytical Data Summary										
Extraction Method: EPA Method 3550					EPA Method 8081										
Analytical Method: EPA Method 8081															
Matrix: Soil															
Units: mg/kg															
				Environmental Samples											
			Field ID:		AOC-08-SB3-3.5		AOC-08-SB3-3.5				AOC-08-SB3-3.5DL		AOC-08-SB3-3.5DL		
			Batch ID:		H590		H590				H590		H590		
	DB-5	DB-608		DB-5	DB-5	DB-608	DB-608			DB-5	DB-5	DB-608	DB-608		
Parameters	MDL	MDL		PQL	Result	PQL	Result	Validity	Comments	PQL	Result	PQL	Result	Validity	Comments
											Dilution 10		Dilution 10		
alpha BHC	0.0001	0.0001		0.00021	ND	0.00018	ND	U	g	0.0021	0.018	0.0018	ND	U	h
beta BHC	0.0001	0.0001		0.00031	0.74	0.00029	0.013	J	n	0.0031	0.81	0.0029	0.032	J	n
delta BHC	0.0001	0.0001		0.00032	ND	0.00024	ND	U	g	0.0032	ND	0.0024	ND	U	g
gamma BHC (Lindane)	0.0001	0.0001		0.00026	0.38	0.00021	ND	U	h	0.0025	ND	0.0021	ND	U	g
Heptachlor	0.0001	0.0001		0.0003	ND	0.0003	ND	U	g	0.0029	ND	0.0029	ND	U	g
Aldrin	0.0001	0.0001		0.00020	ND	0.00026	ND	U	g	0.0020	0.12	0.0026	0.044	J	n
Heptachlor Epoxide	0.0001	0.0001		0.00026	0.025	0.00032	ND	U	h	0.0025	ND	0.0032	ND	U	g
Endosulfan I	0.0001	0.0001		0.00037	ND	0.00037	ND	U	g	0.0037	0.041	0.0037	ND	U	h
Dieldrin	0.0001	0.0002		0.0004	ND	0.0005	ND	U	g	0.0040	ND	0.0049	ND	U	g
4,4'-DDE	0.0001	0.0002		0.0003	0.033	0.0005	0.063	J	n	0.0033	0.060	0.0049	0.094		g
Endrin	0.0001	0.0001		0.0003	0.088 E**	0.0003	0.14 E**	J	n	0.0032	0.081	0.0034	0.14	J	n
Endosulfan II	0.0002	0.0002		0.0005	ND	0.0005	ND	U	g	0.0053	ND	0.0052	ND	U	g
4,4'-DDD	0.0001	0.0001		0.0004	0.10 E**	0.0005	0.14 E**	J	n	0.0040	0.060	0.0047	0.073		g
Endosulfan Sulfate	0.0002	0.0002		0.0008	ND	0.0008	ND	U	g	0.0081	ND	0.0081	ND	U	g
4,4'-DDT	0.0002	0.0001		0.0008	0.15	0.0004	0.12	J	n	0.0075	0.17	0.0043	0.12		g
Methoxychlor	0.0008	0.0011		0.0028	3.4	0.0035	0.034	J	n	0.028	0.077	0.035	0.12	J	n
Endrin Aldehyde	0.0002	0.0003		0.0007	ND	0.0009	ND	U	g	0.0073	ND	0.0086	ND	U	g
gamma-Chlordane	0.0001	0.0001		0.00018	ND	0.00026	ND	U	g	0.0018	0.082	0.0026	0.038	J	n
alpha-Chlordane	0.0001	0.0001		0.00021	ND	0.00037	ND	U	g	0.0021	ND	0.0037	ND	U	g
Toxaphene	0.007	0.009		0.02	ND	0.03	ND	U	g	0.24	ND	0.30	ND	U	g
Arochlor 1016	0.009	0.009		0.03	ND	0.03	ND	U	g	0.29	ND	0.28	ND	U	g
Arochlor 1242	0.005	0.008		0.02	ND	0.02	ND	U	g	0.18	ND	0.25	ND	U	g
Arochlor 1248	0.004	0.005		0.01	ND	0.02	ND	U	g	0.12	ND	0.16	ND	U	g
Arochlor 1254	0.011	0.009		0.03	0.09*	0.03	0.09*		g	0.03	0.85*	0.03	0.85*		g
Arochlor 1260	0.009	0.010		0.03	1.6	0.01	1.3		g	0.28	1.6	0.15	1.6		g
Arochlor 1221	0.011	0.010		0.03	ND	0.03	ND	U	g	0.35	ND	0.31	ND	U	g
Arochlor 1232	0.005	0.005		0.01	ND	0.00	ND	U	g	0.15	ND	0.15	ND	U	g

* In the opinion of the analyst, the relevant compound may not be present at or below the indicated concentration due to interfering background contamination that prevents a positive or negative spectral confirmation.

** Analyte detected above linear calibration range.

Base: Kotzebue LRRS

Site: AOC8

Table 2.5

Analytical Data Summary

EPA Method 8081

Extraction Method: EPA Method 3550

Analytical Method: EPA Method 8081

Matrix: Soil

Units: mg/kg

				Environmental Samples												
			Field ID:		AOC8-SB4-1.0		AOC8-SB4-1.0				AOC8-SB4-1.0DL		AOC8-SB4-1.0DL			
			Batch ID:		H886		H886				H886		H886			
	DB-5	DB-608		DB-5	DB-5	DB-608	DB-608			DB-5	DB-5	DB-608	DB-608			
Parameters	MDL	MDL		PQL	Result	PQL	Result	Validity	Comments	PQL	Result Dilution 10	PQL	Result Dilution 10	Validity	Comments	
alpha BHC	0.0001	0.0001		0.00026	0.0030	0.00024	0.0026	J	n	0.0026	ND	0.0024	ND	U	g	
beta BHC	0.0001	0.0001		0.00040	0.0070	0.00037	ND	U	h	0.0040	0.016	0.0037	ND	U	h	
delta BHC	0.0001	0.0001		0.00041	ND	0.00031	ND	U	g	0.0041	ND	0.0031	ND	U	g	
gamma BHC (Lindane)	0.0001	0.0001		0.00032	0.0024	0.00027	ND	U	h	0.0032	0.016	0.0027	ND	U	h	
Heptachlor	0.0001	0.0001		0.0004	ND	0.0004	ND	U	g	0.0037	ND	0.0037	ND	U	g	
Aldrin	0.0001	0.0001		0.00026	ND	0.00033	ND	U	g	0.0026	0.0087	0.0033	ND	U	h	
Heptachlor Epoxide	0.0001	0.0001		0.00032	0.0016	0.00041	ND	U	a,h	0.0032	ND	0.0041	ND	U	a	
Endosulfan I	0.0001	0.0001		0.00047	ND	0.00047	ND	U	g	0.0047	ND	0.0047	ND	U	g	
Dieldrin	0.0001	0.0002		0.0005	ND	0.0006	ND	U	g	0.0051	0.11	0.0063	0.023	J	n	
4,4'-DDE	0.0001	0.0002		0.0004	0.040	0.0006	0.030		g	0.0042	0.066	0.0062	0.053		g	
Endrin	0.0001	0.0001		0.0004	0.13 E**	0.0004	0.49 E**	J	a,n	0.0041	0.17	0.0043	0.75	J	n	
Endosulfan II	0.0002	0.0002		0.0007	ND	0.0007	ND	U	a	0.0068	ND	0.0066	ND	U	a	
4,4'-DDD	0.0001	0.0001		0.0005	0.38 E**	0.0006	0.39 E**	J	a,n	0.0051	0.26	0.0060	0.28		a	
Endosulfan Sulfate	0.0002	0.0002		0.0010	ND	0.0010	ND	U	g	0.010	ND	0.010	ND	U	g	
4,4'-DDT	0.0002	0.0001		0.0010	0.099 E**	0.0006	0.55 E**	J	n	0.0096	0.14	0.0055	0.72	J	n	
Methoxychlor	0.0008	0.0011		0.0036	0.27	0.0045	0.38	J	n	0.036	0.29	0.045	0.50	J	n	
Endrin Aldehyde	0.0002	0.0003		0.0009	ND	0.0011	ND	U	g	0.0093	ND	0.011	ND	U	g	
gamma-Chlordane	0.0001	0.0001		0.00022	0.014	0.00033	0.061	J	n	0.0023	0.019	0.0033	0.091	J	n	
alpha-Chlordane	0.0001	0.0001		0.00026	ND	0.00047	ND	U	g	0.0026	ND	0.0047	ND	U	g	
Toxaphene	0.007	0.009		0.03	ND	0.04	ND	U	g	0.31	ND	0.38	ND	U	g	
Arochlor 1016	0.009	0.009		0.04	ND	0.04	ND	U	g	0.37	ND	0.36	ND	U	g	
Arochlor 1242	0.005	0.008		0.02	ND	0.03	ND	U	g	0.22	ND	0.32	ND	U	g	
Arochlor 1248	0.004	0.005		0.01	ND	0.02	ND	U	g	0.15	ND	0.20	ND	U	g	
Arochlor 1254	0.011	0.009		0.04	1.3*	0.03	1.3*		g	0.04	1.7*	0.03	0.38*		g	
Arochlor 1260	0.009	0.010		0.04	8.3 E**	0.02	6.8 E**	J	n	0.36	8.4 E**	0.19	9.2 E**	J	n	
Arochlor 1221	0.011	0.010		0.04	ND	0.04	ND	U	g	0.44	ND	0.40	ND	U	g	
Arochlor 1232	0.005	0.005		0.02	ND	0.00	ND	U	g	0.19	ND	0.02	ND	U	g	

* In the opinion of the analyst, the relevant compound may not be present at or below the indicated concentration due to interfering background contamination that prevents a positive or negative spectral confirmation.

** Analyte detected above linear calibration range.

Base: Kotzebue LRRS						Table 2.6								
Site: AOC8						Analytical Data Summary								
Extraction Method: EPA Method 8260						EPA Method 8260								
Analytical Method: EPA Method 8260														
Matrix: Soil														
Units: mg/kg														
			Environmental Samples											
		Field ID:		AOC-08-SB1-1.5				AOC-08-SB2-1.5				AOC-08-SB3-3.5		
		Batch ID:		H590				H590				H590		
Parameters	MDL		PQL	Result	Validity	Comments	PQL	Result	Validity	Comments	PQL	Result	Validity	Comments
Chloromethane	0.0009		0.003	ND	U	g	0.014	ND	U	g	0.007	ND	U	g
Bromomethane	0.0008		0.003	ND	U	g	0.013	ND	U	g	0.007	ND	U	g
Vinyl Chloride	0.0010		0.003	ND	U	g	0.016	ND	U	g	0.008	ND	U	g
Chloroethane	0.0010		0.003	ND	U	g	0.017	ND	U	g	0.009	ND	U	g
Methylene Chloride	0.0009		0.003	0.003	B J	a	0.014	0.012	B J	a	0.007	0.004	B J	a,c
Acetone	0.0039		0.01	0.005	B	k	0.06	ND	U	k	0.03	ND	U	k
Carbon Disulfide	0.0005		0.002	ND	U	g	0.009	ND	U	g	0.005	ND	U	g
1,1-Dichloroethene	0.0012		0.004	ND	U	g	0.019	ND	U	g	0.010	ND	U	g
1,1-Dichloroethane	0.0004		0.001	ND	U	g	0.006	ND	U	g	0.003	ND	U	g
trans-1,2-Dichloroethene	0.0009		0.003	ND	U	g	0.014	ND	U	g	0.007	ND	U	g
cis-1,2-Dichloroethylene	0.0011		0.004	ND	U	g	0.019	ND	U	g	0.010	ND	U	g
Chloroform	0.0005		0.002	ND	U	g	0.008	ND	U	g	0.004	ND	U	g
1,2-Dichloroethane	0.0005		0.002	ND	U	g	0.008	ND	U	g	0.004	ND	U	g
Methyl Ethyl Ketone (2-butanone)	0.0025		0.008	ND	U	g	0.040	ND	U	g	0.021	ND	U	g
1,1,1-Trichloroethane	0.0004		0.001	ND	U	g	0.007	ND	U	g	0.004	ND	U	g
Carbon Tetrachloride	0.0010		0.003	ND	U	g	0.016	ND	U	g	0.008	ND	U	g
Vinyl Acetate	0.0016		0.005	ND	U	g	0.026	ND	U	g	0.014	ND	U	g
Bromodichloromethane	0.0006		0.002	ND	U	g	0.011	ND	U	g	0.006	ND	U	g
1,2-Dichloropropane	0.0008		0.003	ND	U	g	0.014	ND	U	g	0.007	ND	U	g
cis-1,3-Dichloropropene	0.0007		0.002	ND	U	g	0.011	ND	U	g	0.006	ND	U	g
Trichloroethylene (tce)	0.0005		0.002	ND	U	g	0.009	ND	U	g	0.005	ND	U	g
Dibromochloromethane	0.0003		0.001	ND	U	g	0.006	ND	U	g	0.003	ND	U	g
1,1,2-Trichloroethane	0.0007		0.002	ND	U	g	0.011	ND	U	g	0.006	ND	U	g
Benzene	0.0005		0.0016	ND	U	g	0.0077	ND	U	g	0.0040	ND	U	g

Base: Kotzebue LRRS							Table 2.6							
Site: AOC8							Analytical Data Summary							
Extraction Method: EPA Method 8260							EPA Method 8260							
Analytical Method: EPA Method 8260														
Matrix: Soil														
Units: mg/kg														
			Environmental Samples											
		Field ID:		AOC-08-SB1-1.5				AOC-08-SB2-1.5				AOC-08-SB3-3.5		
		Batch ID:		H590				H590				H590		
Parameters	MDL		PQL	Result	Validity	Comments	PQL	Result	Validity	Comments	PQL	Result	Validity	Comments
trans-1,3-Dichloropropene	0.0005		0.002	ND	U	g	0.009	ND	U	g	0.004	ND	U	g
2-Chloroethyl Vinyl Ether	0.0006		0.002	ND	U	g	0.010	ND	U	g	0.005	ND	U	g
Bromoform	0.0013		0.004	ND	U	g	0.021	ND	U	g	0.011	ND	U	g
Methyl Isobutyl Ketone	0.0015		0.005	ND	U	g	0.025	ND	U	g	0.013	ND	U	g
2-Hexanone	0.0027		0.009	ND	U	g	0.045	ND	U	g	0.023	ND	U	g
Tetrachloroethylene (pce)	0.0009		0.003	ND	U	g	0.015	ND	U	g	0.008	ND	U	g
1,1,2,2-Tetrachloroethane	0.0009		0.0031	ND	U	g	0.015	ND	U	g	0.0077	ND	U	g
Toluene	0.0009		0.0031	ND	U	g	0.015	ND	U	g	0.0077	ND	U	g
Chlorobenzene	0.0007		0.002	ND	U	g	0.012	ND	U	g	0.006	ND	U	g
Ethylbenzene	0.0004		0.0014	ND	U	g	0.0070	ND	U	g	0.0036	ND	U	g
Styrene	0.0006		0.002	ND	U	g	0.010	ND	U	g	0.005	ND	U	g
1,1,2-Trichloro-1,2,2-trifluoroethane	0.0007		0.002	ND	U	g	0.012	ND	U	g	0.006	ND	U	g
Xylenes, total	0.002		0.007	ND	U	g	0.033	ND	U	g	0.017	ND	U	g
1,1,1,2-Tetrachloroethane	0.0010		0.003	ND	U	g	0.016	ND	U	g	0.008	ND	U	g
1,2,3-Trichloropropane	0.0023		0.008	ND	U	g	0.037	ND	U	g	0.019	ND	U	g
Bromochloromethane	0.0007		0.002	ND	U	g	0.011	ND	U	g	0.006	ND	U	g
1-Chlorohexane	0.0007		0.002	ND	U	g	0.011	ND	U	g	0.006	ND	U	g
Bromobenzene	0.0007		0.0025	ND	U	g	0.012	ND	U	g	0.0062	ND	U	g

Base: Kotzebue LRRS						Table 2.6							
Site: AOC8						Analytical Data Summary							
Extraction Method: EPA Method 8260						EPA Method 8260							
Analytical Method: EPA Method 8260													
Matrix: Soil													
Units: mg/kg													
			Environmental Samples										
		Field ID:		AOC8-SB4-1.0									
		Batch ID:		H886									
Parameters	MDL		PQL	Result	Validity	Comments							
Chloromethane	0.0009		0.003	ND	U	g							
Bromomethane	0.0008		0.003	ND	U	g							
Vinyl Chloride	0.0010		0.004	ND	U	g							
Chloroethane	0.0010		0.004	ND	U	g							
Methylene Chloride	0.0009		0.003	0.005	B	a, k							
Acetone	0.0039		0.02	0.01	B	a, k							
Carbon Disulfide	0.0005		0.002	ND	U	g							
1,1-Dichloroethene	0.0012		0.005	ND	U	g							
1,1-Dichloroethane	0.0004		0.001	ND	U	g							
trans-1,2-Dichloroethene	0.0009		0.003	ND	U	g							
cis-1,2-Dichloroethylene	0.0011		0.004	ND	U	g							
Chloroform	0.0005		0.002	ND	U	g							
1,2-Dichloroethane	0.0005		0.002	ND	U	g							
Methyl Ethyl Ketone (2-butanone)	0.0025		0.010	ND	U	a							
1,1,1-Trichloroethane	0.0004		0.002	ND	U	g							
Carbon Tetrachloride	0.0010		0.004	ND	U	g							
Vinyl Acetate	0.0016		0.006	ND	U	g							
Bromodichloromethane	0.0006		0.003	ND	U	g							
1,2-Dichloropropane	0.0008		0.003	ND	U	g							
cis-1,3-Dichloropropene	0.0007		0.003	ND	U	g							
Trichloroethylene (tce)	0.0005		0.002	ND	U	g							
Dibromochloromethane	0.0003		0.001	ND	U	g							
1,1,2-Trichloroethane	0.0007		0.003	ND	U	g							
Benzene	0.0005		0.0018	ND	U	g							

Base: Kotzebue LRRS						Table 2.6								
Site: AOC8						Analytical Data Summary								
Extraction Method: EPA Method 8260						EPA Method 8260								
Analytical Method: EPA Method 8260														
Matrix: Soil														
Units: mg/kg														
			Environmental Samples											
		Field ID:		AOC8-SB4-1.0										
		Batch ID:		H886										
Parameters	MDL		PQL	Result	Validity	Comments								
trans-1,3-Dichloropropene	0.0005		0.002	ND	U	g								
2-Chloroethyl Vinyl Ether	0.0006		0.002	ND	U	g								
Bromoform	0.0013		0.005	ND	U	g								
Methyl Isobutyl Ketone	0.0015		0.006	ND	U	g								
2-Hexanone	0.0027		0.011	ND	U	g								
Tetrachloroethylene (pce)	0.0009		0.004	ND	U	g								
1,1,2,2-Tetrachloroethane	0.0009		0.0035	ND	U	g								
Toluene	0.0009		0.0035	0.0013	J									
Chlorobenzene	0.0007		0.003	ND	U	g								
Ethylbenzene	0.0004		0.0017	ND	U	g								
Styrene	0.0006		0.002	ND	U	g								
1,1,2-Trichloro-1,2,2-trifluoroethane	0.0007		0.003	0.002	B J	a								
Xylenes, total	0.0020		0.008	0.004	J									
1,1,1,2-Tetrachloroethane	0.0010		0.004	ND	U	g								
1,2,3-Trichloropropane	0.0023		0.009	ND	U	g								
Bromochloromethane	0.0007		0.003	ND	U	g								
1-Chlorohexane	0.0007		0.003	ND	U	g								
Bromobenzene	0.0007		0.0028	ND	U	g								

Base: Kotzebue LRRS
Site: AOC8
Extraction Method: EPA Method 3550
Analytical Method: EPA Method 8270
Matrix: Soil
Units: mg/kg

Table 16.2.1.7
Analytical Data Summary
EPA Method 8270

Environmental Samples

		Field ID:		AOC-08-SB1-1.5				AOC-08-SB2-1.5				AOC-08-SB3-3.5			
		Batch ID:		H590				H590				H590			
Parameters	MDL		PQL	Result	Validity	Comments	PQL	Result	Validity	Comments	PQL	Result	Validity	Comments
Phenol	0.05		0.2	ND	U	g	0.2	ND	U	g	0.2	ND	U	g
bis(2-Chloroethyl) Ether	0.04		0.1	ND	U	g	0.1	ND	U	g	0.1	ND	U	g
2-Chlorophenol	0.07		0.2	ND	U	g	0.2	ND	U	g	0.2	ND	U	g
1,3-Dichlorobenzene	0.04		0.1	ND	U	k	0.1	ND	U	k	0.1	ND	U	k
1,4-Dichlorobenzene	0.03		0.1	ND	U	g	0.1	ND	U	g	0.1	ND	U	g
Benzyl Alcohol	0.05		0.2	ND	U	g	0.2	ND	U	g	0.2	ND	U	g
1,2-Dichlorobenzene	0.04		0.1	ND	U	g	0.1	ND	U	g	0.1	ND	U	g
2-Methylphenol	0.10		0.3	ND	U	g	0.3	ND	U	g	0.3	ND	U	g
2,2'-Oxybis (1-Chloropropane)	0.03		0.1	ND	U	g	0.1	ND	U	g	0.1	ND	U	g
4-Methylphenol	0.08		0.2	ND	U	g	0.3	ND	U	g	0.3	ND	U	g
N-Nitrosodi-n-propylamine	0.03		0.1	ND	U	g	0.1	ND	U	g	0.1	ND	U	g
Hexachloroethane	0.04		0.1	ND	U	g	0.1	ND	U	g	0.1	ND	U	g
Nitrobenzene	0.02		0.1	ND	U	g	0.1	ND	U	g	0.1	ND	U	g
Isophorone	0.03		0.1	ND	U	g	0.1	ND	U	g	0.1	ND	U	g
2-Nitrophenol	0.03		0.1	ND	U	g	0.1	ND	U	g	0.1	ND	U	g
2,4-Dimethylphenol	0.17		0.3	ND	U	g	0.3	ND	U	g	0.3	ND	U	g
Benzoic Acid	0.06		0.18	ND	U	g	0.19	ND	U	g	0.19	ND	U	g
bis(2-Chloroethoxy) Methane	0.04		0.1	ND	U	g	0.1	ND	U	g	0.1	ND	U	g
2,4-Dichlorophenol	0.04		0.1	ND	U	g	0.2	ND	U	g	0.1	ND	U	g
1,2,4-Trichlorobenzene	0.03		0.1	ND	U	g	0.1	ND	U	g	0.1	ND	U	g
Naphthalene	0.04		0.1	ND	U	g	0.1	ND	U	g	0.1	ND	U	g
4-Chloroaniline	0.10		0.3	ND	U	g	0.3	ND	U	g	0.3	ND	U	g
Hexachlorobutadiene	0.03		0.1	ND	U	g	0.1	ND	U	g	0.1	ND	U	g
4-Chloro-3-Methylphenol	0.06		0.2	ND	U	g	0.2	ND	U	g	0.2	ND	U	g
2-Methylnaphthalene	0.03		0.1	ND	U	g	0.1	ND	U	g	0.1	ND	U	g
Hexachlorocyclopentadiene	0.03		0.1	ND	U	g	0.1	ND	U	g	0.1	ND	U	g
2,4,6-Trichlorophenol	0.04		0.1	ND	U	g	0.1	ND	U	g	0.1	ND	U	g
2,4,5-Trichlorophenol	0.03		0.08	ND	U	g	0.09	ND	U	g	0.08	ND	U	g
2-Chloronaphthalene	0.03		0.1	ND	U	g	0.1	ND	U	g	0.1	ND	U	g
2-Nitroaniline	0.02		0.06	ND	U	g	0.06	ND	U	g	0.06	ND	U	g
Dimethyl Phthalate	0.04		0.1	ND	U	g	0.1	ND	U	g	0.1	ND	U	g
Acenaphthylene	0.04		0.1	ND	U	g	0.1	ND	U	g	0.1	ND	U	g
3-Nitroaniline	0.11		0.36	ND	U	g	0.38	ND	U	g	0.36	ND	U	g
Acenaphthene	0.03		0.1	ND	U	g	0.1	ND	U	g	0.1	ND	U	g
2,4-Dinitrophenol	0.09		0.29	ND	U	g	0.30	ND	U	g	0.29	ND	U	g
4-Nitrophenol	0.07		0.22	ND	U	g	0.23	ND	U	g	0.22	ND	U	g
Dibenzofuran	0.03		0.1	ND	U	g	0.1	ND	U	g	0.1	ND	U	g
2,6-Dinitrotoluene	0.04		0.1	ND	U	g	0.1	ND	U	g	0.1	ND	U	g

Base: Kotzebue LRRS						Table 15.2.1.7								
Site: AOC8						Analytical Data Summary								
Extraction Method: EPA Method 3550						EPA Method 8270								
Analytical Method: EPA Method 8270														
Matrix: Soil														
Units: mg/kg														
			Environmental Samples											
		Field ID:		AOC-08-SB1-1.5				AOC-08-SB2-1.5				AOC-08-SB3-3.5		
		Batch ID:		H590				H590				H590		
Parameters	MDL		PQL	Result	Validity	Comments	PQL	Result	Validity	Comments	PQL	Result	Validity	Comments
2,4-Dinitrotoluene	0.02		0.1	ND	U	g	0.1	ND	U	g	0.1	ND	U	g
Diethyl Phthalate	0.04		0.1	ND	U	g	0.1	ND	U	g	0.1	ND	U	g
4-Chlorophenyl Phenyl Ether	0.02		0.1	ND	U	g	0.1	ND	U	g	0.1	ND	U	g
Fluorene	0.03		0.1	ND	U	g	0.1	ND	U	g	0.1	ND	U	g
4-Nitroaniline	0.13		0.43	ND	U	g	0.45	ND	U	g	0.44	ND	U	g
4,6-Dinitro-2-Methylphenol	0.09		0.29	ND	U	g	0.30	ND	U	g	0.29	ND	U	g
N-Nitrosodiphenylamine	0.08		0.3	ND	U	g	0.3	ND	U	g	0.3	ND	U	g
4-Bromophenyl Phenyl Ether	0.02		0.1	ND	U	g	0.1	ND	U	g	0.1	ND	U	g
Hexachlorobenzene	0.03		0.1	ND	U	g	0.1	ND	U	g	0.1	ND	U	g
Pentachlorophenol	0.03		0.11	ND	U	g	0.11	ND	U	g	0.11	ND	U	g
Phenanthrene	0.03		0.1	ND	U	g	0.1	0.1	J		0.1	ND	U	g
Anthracene	0.04		0.1	ND	U	g	0.1	ND	U	g	0.1	ND	U	g
di-n-butyl Phthalate	0.06		0.2	ND	U	g	0.2	ND	U	g	0.2	ND	U	g
Fluroanthene	0.03		0.1	ND	U	g	0.1	0.1		g	0.1	ND	U	g
Pyrene	0.03		0.1	ND	U	g	0.1	0.1		g	0.1	ND	U	g
Butylbenzylphthalate	0.02		0.1	ND	U	g	0.1	ND	U	g	0.1	ND	U	g
3,3'-Dichlorobenzidine	0.06		0.2	ND	U	g	0.2	ND	U	g	0.2	ND	U	g
Benzo(a)anthracene	0.04		0.1	ND	U	g	0.1	0.1	J		0.1	ND	U	g
bis(2-Ethylhexyl) Phthalate	0.04		0.1	0.3		g	0.1	ND	U	g	0.1	0.8		g
Chrysene	0.05		0.1	ND	U	g	0.2	0.1	J		0.1	ND	U	g
di-n-Octylphthalate	0.02		0.1	ND	U	g	0.1	ND	U	g	0.1	ND	U	g
Benzo(b)fluoranthene	0.04		0.1	ND	U	g	0.1	0.1	J		0.1	ND	U	g
Benzo(k)fluoranthene	007		0.2	ND	U	g	0.3	ND	U	g	0.2	ND	U	g
Benzo(a)pyrene	0.04		0.1	ND	U	g	0.1	0.1	J		0.1	ND	U	g
Indeno(1,2,3-c,d)pyrene	0.03		0.1	ND	U	g	0.1	ND	U	g	0.1	ND	U	g
Dibenzo(a,h)anthracene	0.02		0.1	ND	U	g	0.1	ND	U	g	0.1	ND	U	g
Benzo(g,h,i)perylene	0.03		0.1	ND	U	g	0.1	ND	U	g	0.1	ND	U	g

Base: Kotzebue LRRS
Site: AOC8
Extraction Method: EPA Method 3550
Analytical Method: EPA Method 8270
Matrix: Soil
Units: mg/kg

Table 15.2.1.7
Analytical Data Summary
EPA Method 8270

			Environmental Samples			
		Field ID:		AOC8-SB4-1.0		
		Batch ID:		H886		
Parameters	MDL		PQL	Result	Validity	Comments
Phenol	0.05		0.2	0.2	J	
bis(2-Chloroethyl) Ether	0.04		0.2	ND	U	g
2-Chlorophenol	0.07		0.3	ND	U	g
1,3-Dichlorobenzene	0.04		0.2	ND	U	g
1,4-Dichlorobenzene	0.03		0.1	ND	U	g
Benzyl Alcohol	0.05		0.2	ND	U	g
1,2-Dichlorobenzene	0.04		0.2	ND	U	g
2-Methylphenol	0.10		0.4	ND	U	g
2,2'-Oxybis (1-Chloropropane)	0.03		0.1	ND	U	g
4-Methylphenol	0.08		0.3	1.2		g
N-Nitrosodi-n-propylamine	0.03		0.1	ND	U	g
Hexachloroethane	0.04		0.2	ND	U	g
Nitrobenzene	0.02		0.4	ND	U	g
Isophorone	0.03		2.3	ND	U	g
2-Nitrophenol	0.03		0.7	ND	U	g
2,4-Dimethylphenol	0.17		1.8	ND	U	g
Benzoic Acid	0.06		0.62	ND	U	g
bis(2-Chloroethoxy) Methane	0.04		0.1	ND	U	g
2,4-Dichlorophenol	0.04		0.2	ND	U	g
1,2,4-Trichlorobenzene	0.03		0.1	ND	U	g
Naphthalene	0.04		0.1	0.5		g
4-Chloroaniline	0.10		0.4	ND	U	g
Hexachlorobutadiene	0.03		0.1	ND	U	g
4-Chloro-3-Methylphenol	0.06		0.2	ND	U	g
2-Methylnaphthalene	0.03		0.1	0.7		g
Hexachlorocyclopentadiene	0.03		0.1	ND	U	g
2,4,6-Trichlorophenol	0.04		0.2	ND	U	g
2,4,5-Trichlorophenol	0.03		0.10	ND	U	g
2-Chloronaphthalene	0.03		0.1	ND	U	g
2-Nitroaniline	0.02		0.28	ND	U	g
Dimethyl Phthalate	0.04		0.1	ND	U	g
Acenaphthylene	0.04		0.2	ND	U	g
3-Nitroaniline	0.11		0.49	ND	U	g
Acenaphthene	0.03		0.1	ND	U	g
2,4-Dinitrophenol	0.09		0.37	ND	U	g
4-Nitrophenol	0.07		2.0	ND	U	g
Dibenzofuran	0.03		0.1	ND	U	g
2,6-Dinitrotoluene	0.04		1.5	ND	U	g

Base: Kotzebue LRRS						Table 15.2.1.7								
Site: AOC8						Analytical Data Summary								
Extraction Method: EPA Method 3550						EPA Method 8270								
Analytical Method: EPA Method 8270														
Matrix: Soil														
Units: mg/kg														
			Environmental Samples											
		Field ID:		AOC8-SB4-1.0										
		Batch ID:		H886										
Parameters	MDL		PQL	Result	Validity	Comments								
2,4-Dinitrotoluene	0.02		0.1	ND	U	g								
Diethyl Phthalate	0.04		0.1	ND	U	g								
4-Chlorophenyl Phenyl Ether	0.02		0.1	ND	U	g								
Fluorene	0.03		0.1	ND	U	g								
4-Nitroaniline	0.13		0.55	ND	U	g								
4,6-Dinitro-2-Methylphenol	0.09		0.37	ND	U	g								
N-Nitrosodiphenylamine	0.08		0.4	ND	U	g								
4-Bromophenyl Phenyl Ether	0.02		0.1	ND	U	g								
Hexachlorobenzene	0.03		0.1	ND	U	g								
Pentachlorophenol	0.03		0.14	ND	U	g								
Phenanthrene	0.03		0.1	ND	U	g								
Anthracene	0.04		0.2	ND	U	g								
di-n-butyl Phthalate	0.06		0.3	ND	U	g								
Fluroanthene	0.03		0.1	ND	U	g								
Pyrene	0.03		0.1	ND	U	g								
Butylbenzylphthalate	0.02		0.1	ND	U	g								
3,3'-Dichlorobenzidine	0.06		0.2	ND	U	g								
Benzo(a)anthracene	0.04		0.2	ND	U	g								
bis(2-Ethylhexyl) Phthalate	0.04		0.2	0.1	J									
Chrysene	0.05		0.2	ND	U	g								
di-n-Octylphthalate	0.02		0.1	ND	U	g								
Benzo(b)fluoranthene	0.04		0.2	ND	U	g								
Benzo(k)fluoranthene	0.07		0.3	ND	U	g								
Benzo(a)pyrene	0.04		0.2	ND	U	g								
Indeno(1,2,3-c,d)pyrene	0.03		0.1	ND	U	g								
Dibenzo(a,h)anthracene	0.02		0.1	ND	U	g								
Benzo(g,h,i)perylene	0.03		0.1	ND	U	g								

Base: Kotzebue LRRS						Table 2.8								
Site: AOC8						Analytical Data Summary								
Extraction Method: Not Applicable						EPA Method 9060								
Analytical Method: EPA Method 9060														
Matrix: Soil														
Units: mg/kg														
			Environmental Samples											
		Field ID:	AOC-08-GTI-T-3.0				AOC-08-GT2-G-2.0							
		Batch ID:		H671				G671						
Parameters	MDL		PQL	Result	Validity	Comments	PQL	Result	Validity	Comments				
Total Organic Carbon	158		560	79200		g	560	12600		g				

ANALYTICAL DATA SUMMARY
AOC10-SEPTIC HOLDING TANK

Base: Kotzebue LRRS						Table 2.1.1						
Site: AOC10						Analytical Data Summary						
Extraction Method: EPA Method 3550						Method AK102						
Analytical Method: Method AK102												
Matrix: Sludge												
Units: mg/kg												
			Environmental Samples									
		Field ID:		AOC10-SD1				AOC10-SD1DL				
		Batch ID:		H718				H718				
Parameters	MDL		PQL	Result	Validity	Comments	PQL	Result	Validity	Comments		
								Dilution 10				
Diesel Hydrocarbons	56		17	6400 E*	J	n	170	8600		g		
AK102 Extended	NA		NA	8900		g	NA	NA	NA	NA		
* Analyte detected above linear calibration range.												

Base: Kotzebue LRRS						Table 2.1.1							
Site: AOC10						Analytical Data Summary							
Extraction Method: EPA Method 3550						Method AK102							
Analytical Method: Method AK102													
Matrix: Sludge													
Units: mg/kg													
			Environmental Samples										
		Field ID:		AOC10-SB1									
		Batch ID:		H753									
Parameters	MDL		PQL	Result	Validity	Comments							
Diesel Hydrocarbons	2.1		6.7	680		g							

Base: Kotzebue LRRS

Site: AOC10

Extraction Method: EPA Method 3050

Analytical Method: EPA Method 6010

Matrix: Sludge

Units: mg/kg

Table 2.1.2
Analytical Data Summary
EPA Method 6010

	Environmental Samples		
Field ID:		AOC10-SD1	
Batch ID:		H718	
Parameters	MDL	PQL	Result	Validity	Comments
Aluminum	2.7	9	6900		a
Antimony	9	30	40	J	c
Arsenic	8	20	90		g
Barium	1.2	4	770		g
Beryllium	0.05	0.2	0.1	J	
Cadmium	1.6	5	30		g
Calcium	6.0	19	24000		g
Chromium, total	0.53	1.7	130		g
Cobalt	0.8	3	25		g
Copper	0.22	0.7	3100		a
Iron	1.6	5	100000		g
Magnesium	3.7	12	4800		g
Manganese	0.9	3	600		g
Molybdenum	0.60	1.9	8.7		g
Nickel	1.6	5	83		g
Potassium	44	140	700	J	c
Selenium	9	30	ND	U	g
Silver	0.35	1.1	38		g
Sodium	18	60	5800		a
Thallium	3.5	11	55		g
Vanadium	0.34	1.1	14	J	c
Zinc	0.62	2.2	12000		a

Table 2.1.3
Analytical Data Summary
EPA Method 7000

Base: Kotzebue LRRS
Site: AOC10
Extraction Method: See below
Analytical Method: See below
Matrix: Soil
Units: mg/kg

				Environmental Samples				
			Field ID:		AOC10-SD1			
			Batch ID:		H718			
Parameters	EPA Method	MDL		PQL	Result	Validity	Comments	
Lead	3050/7421	0.34		1.1	1300*		g	
Mercury	7471	0.019		0.06	4.5		a	

* Sample diluted at a factor of 250.00.

Base: Kotzebue LRRS

Site: AOC10

Extraction Method: EPA Method 3550

Analytical Method: EPA Method 8081

Matrix: Sludge

Units: mg/kg

Table 2.1.4

Analytical Data Summary

EPA Method 8081

				Environmental Samples					
			Field ID:		AOC10-SD1		AOC10-SD1		
			Batch ID:		H718		H718		
	DB-5	DB-608		DB-5	DB-5	DB-608	DB-608		
Parameters	MDL	MDL		PQL	Result	PQL	Result	Validity	Comments
alpha BHC	0.0041	0.0037		0.013	0.16	0.012	0.095	J	n
beta BHC	0.0063	0.0059		0.020	ND	0.019	ND	U	g
delta BHC	0.0064	0.0048		0.020	ND	0.015	ND	U	g
gamma BHC (Lindane)	0.0051	0.0042		0.016	ND	0.013	ND	U	g
Heptachlor	0.0058	0.0057		0.018	ND	0.018	ND	U	g
Aldrin	0.0041	0.0052		0.013	0.074	0.017	ND	U	h
Heptachlor Epoxide	0.0051	0.0064		0.016	0.026	0.020	0.022		a
Endosulfan I	0.0074	0.0074		0.024	ND	0.024	ND	U	g
Dieldrin	0.0079	0.0098		0.025	0.42	0.031	0.26	J	n
4,4'-DDE	0.0065	0.0098		0.021	0.61	0.031	0.51		g
Endrin	0.0065	0.0067		0.021	0.12	0.021	0.32	J	n
Endosulfan II	0.011	0.010		0.034	0.43	0.033	0.36		g
4,4'-DDD	0.0079	0.0094		0.025	0.30	0.030	0.34		g
Endosulfan Sulfate	0.016	0.016		0.051	ND	0.051	ND	U	g
4,4'-DDT	0.015	0.0086		0.048	0.20	0.027	0.57	J	a,n
Methoxychlor	0.056	0.071		0.18	0.15	0.22	0.24	J	n
Endrin Aldehyde	0.015	0.017		0.046	ND	0.055	ND	U	a
gamma-Chlordane	0.0035	0.0052		0.011	ND	0.017	ND	U	g
alpha-Chlordane	0.0041	0.0074		0.013	ND	0.024	ND	U	g
Toxaphene	0.49	0.59		1.5	ND	1.9	ND	U	g
Arochlor 1016	0.58	0.56		1.8	ND	1.8	ND	U	g
Arochlor 1242	0.35	0.50		1.1	ND	1.6	ND	U	g
Arochlor 1248	0.23	0.31		0.73	ND	0.99	ND	U	g
Arochlor 1254	0.70	0.60		2.2	4.2	1.9	3.6		g
Arochlor 1260	0.57	0.30		1.8	2.2	0.95	1.8		g
Arochlor 1221	0.69	0.62		2.2	ND	2.0	ND	U	g
Arochlor 1232	0.30	0.30		0.95	ND	0.09	ND	U	g

Base: Kotzebue LRRS						Table 2.1.6							
Site: AOC10						Analytical Data Summary							
Extraction Method: EPA Method 8260						EPA Method 8260							
Analytical Method: EPA Method 8260													
Matrix: Sludge													
Units: mg/kg													
			Environmental Samples										
		Field ID:		AOC10-SD1				AOC10-SD1*					
		Batch ID:		H718				H718					
Parameters	MDL		PQL	Result	Validity	Comments	PQL	Result	Validity	Comments			
Chloromethane	0.28		0.057	ND	U	g	0.86	ND	U	g			
Bromomethane	0.26		0.053	ND	U	g	0.80	ND	U	g			
Vinyl Chloride	0.30		0.062	ND	U	g	0.93	ND	U	g			
Chloroethane	0.32		0.066	ND	U	g	0.99	ND	U	g			
Methylene Chloride	0.27		0.056	0.055	B J	a	0.84	0.76	B J	a			
Acetone	1.2		0.26	2.0		g	3.9	4.0	B	a			
Carbon Disulfide	0.17		0.035	0.040		g	0.53	ND	U	g			
1,1-Dichloroethene	0.36		0.076	ND	U	g	1.1	ND	U	g			
1,1-Dichloroethane	0.11		0.023	ND	U	g	0.35	ND	U	g			
trans-1,2-Dichloroethene	0.28		0.057	ND	U	g	0.86	ND	U	g			
cis-1,2-Dichloroethylene	0.36		0.074	ND	U	g	1.1	ND	U	g			
Chloroform	0.14		0.030	ND	U	g	0.45	ND	U	g			
1,2-Dichloroethane	0.16		0.033	ND	U	g	0.49	ND	U	g			
Methyl Ethyl Ketone (2-butanone)	0.77		0.16	0.78		g	2.4	1.2	J				
1,1,1-Trichloroethane	0.13		0.028	ND	U	g	0.42	ND	U	g			
Carbon Tetrachloride	0.31		0.064	ND	U	g	0.96	ND	U	g			
Vinyl Acetate	0.50		0.10	ND	U	g	1.6	ND	U	g			
Bromodichloromethane	0.20		0.042	ND	U	g	0.64	ND	U	g			
1,2-Dichloropropane	0.26		0.055	ND	U	g	0.82	ND	U	g			
cis-1,3-Dichloropropene	0.22		0.045	ND	U	g	0.68	ND	U	g			
Trichloroethylene (tce)	0.17		0.035	ND	U	g	0.53	ND	U	g			
Dibromochloromethane	0.11		0.022	ND	U	g	0.33	ND	U	g			
1,1,2-Trichloroethane	0.22		0.045	ND	U	g	0.68	ND	U	g			
Benzene	0.15		0.031	ND	U	g	0.46	ND	U	g			
* Reanalyzed.													

Base: Kotzebue LRRS
Site: AOC10
Extraction Method: EPA Method 8260
Analytical Method: EPA Method 8260
Matrix: Sludge
Units: mg/kg

Table 2.1.6
Analytical Data Summary
EPA Method 8260

			Environmental Samples							
		Field ID:		AOC10-SD1				AOC10-SD1*		
		Batch ID:		H718				H718		
Parameters	MDL		PQL	Result	Validity	Comments	PQL	Result	Validity	Comments
trans-1,3-Dichloropropene	0.17		0.035	ND	U	g	0.52	ND	U	g
2-Chloroethyl Vinyl Ether	0.20		0.042	ND	U	g	0.63	ND	U	g
Bromoform	0.39		0.082	ND	U	g	1.2	ND	U	g
Methyl Isobutyl Ketone	0.47		0.098	0.085	J		1.5	ND	U	g
2-Hexanone	0.86		0.18	ND	U	g	2.7	ND	U	g
Tetrachloroethylene (pce)	0.28		0.059	ND	U	g	0.88	ND	U	g
1,1,2,2-Tetrachloroethane	0.28		0.059	ND	UJ	n	0.89	ND	U	g
Toluene	0.28		0.059	7.2 E**	J	n	0.89	24		g
Chlorobenzene	0.22		0.047	ND	U	g	0.71	ND	U	g
Ethylbenzene	0.13		0.028	1.1		g	0.42	1.6		g
Styrene	0.20		0.042	ND	U	g	0.63	ND	U	g
1,1,2-Trichloro-1,2,2-trifluoroethane	0.23		0.048	ND	U	g	0.73	ND	U	g
Xylenes, total	0.63		0.13	6.8 E**	J	n	2.0	11		g
1,1,1,2-Tetrachloroethane	0.31		0.065	ND	U	g	0.98	ND	U	g
1,2,3-Trichloropropane	0.71		0.15	ND	UJ	n	2.2	ND	U	g
Bromochloromethane	0.21		0.044	ND	U	g	0.66	ND	U	g
1-Chlorohexane	0.21		0.043	ND	U	g	0.64	ND	U	g
Bromobenzene	0.0007		0.048	ND	UJ	n	0.72	ND	U	g

* Reanalyzed.
** Analyte detected above linear calibration range.

Base: Kotzebue LRRS						Table 2.1.6								
Site: AOC10						Analytical Data Summary								
Extraction Method: EPA Method 3550						EPA Method 8270								
Analytical Method: EPA Method 8270														
Matrix: Sludge														
Units: mg/kg														
			Environmental Samples											
		Field ID:		AOC10-SD1										
		Batch ID:		H718										
Parameters	MDL		PQL	Result	Validity	Comments								
Phenol	1.5		4.7	69		g								
bis(2-Chloroethyl) Ether	1.1		3.4	ND	U	g								
2-Chlorophenol	1.9		6.1	ND	U	g								
1,3-Dichlorobenzene	1.0		3.3	ND	U	g								
1,4-Dichlorobenzene	0.68		2.2	46		g								
Benzyl Alcohol	1.4		4.4	ND	U	g								
1,2-Dichlorobenzene	1.0		3.3	ND	U	g								
2-Methylphenol	2.7		8.5	ND	U	g								
2,2'-Oxybis (1-Chloropropane)	0.88		2.8	ND	U	g								
4-Methylphenol	2.1		6.6	82		g								
N-Nitrosodi-n-propylamine	0.72		2.3	ND	U	g								
Hexachloroethane	1.1		3.4	ND	U	g								
Nitrobenzene	0.67		2.1	ND	U	g								
Isophorone	0.88		2.8	ND	U	g								
2-Nitrophenol	0.93		2.9	ND	U	g								
2,4-Dimethylphenol	4.6		8.1	ND	U	g								
Benzoic Acid	1.5		4.9	ND	U	g								
bis(2-Chloroethoxy) Methane	0.96		3.1	ND	U	g								
2,4-Dichlorophenol	1.2		3.8	ND	U	g								
1,2,4-Trichlorobenzene	0.90		2.9	ND	U	g								
Naphthalene	0.96		3.0	6.3		g								
4-Chloroaniline	2.8		8.8	9.0		g								
Hexachlorobutadiene	0.91		2.9	ND	U	g								
4-Chloro-3-Methylphenol	1.6		5.1	ND	U	g								
2-Methylnaphthalene	0.91		2.9	1.6	J									
Hexachlorocyclopentadiene	0.69		2.2	ND	U	g								
2,4,6-Trichlorophenol	1.2		3.7	ND	U	g								
2,4,5-Trichlorophenol	0.68		2.2	ND	U	g								
2-Chloronaphthalene	0.90		2.9	ND	U	g								
2-Nitroaniline	0.52		1.6	ND	U	g								
Dimethyl Phthalate	0.96		3.1	ND	U	g								
Acenaphthylene	1.1		3.5	ND	U	g								
3-Nitroaniline	3.0		9.5	ND	U	g								
Acenaphthene	0.82		2.6	0.9	J									
2,4-Dinitrophenol	2.4		7.7	ND	U	g								
4-Nitrophenol	1.8		5.7	ND	U	g								
Dibenzofuran	0.84		2.7	ND	U	g								
2,6-Dinitrotoluene	1.1		3.7	ND	U	g								

Base: Kotzebue LRRS						Table 2.1.6							
Site: AOC10						Analytical Data Summary							
Extraction Method: EPA Method 3550						EPA Method 8270							
Analytical Method: EPA Method 8270													
Matrix: Sludge													
Units: mg/kg													
			Environmental Samples										
		Field ID:		AOC10-SD1									
		Batch ID:		H718									
Parameters	MDL		PQL	Result	Validity	Comments							
2,4-Dinitrotoluene	0.60		1.9	ND	U	g							
Diethyl Phthalate	0.95		3.0	ND	U	g							
4-Chlorophenyl Phenyl Ether	0.59		1.9	ND	U	g							
Fluorene	0.82		2.6	1.1	J								
4-Nitroaniline	3.6		11	ND	U	g							
4,6-Dinitro-2-Methylphenol	2.4		7.7	ND	U	g							
N-Nitrosodiphenylamine	2.3		7.3	ND	U	g							
4-Bromophenyl Phenyl Ether	0.59		1.9	ND	U	g							
Hexachlorobenzene	0.88		2.8	ND	U	g							
Pentachlorophenol	0.89		2.8	ND	U	g							
Phenanthrene	0.89		2.8	4.4		g							
Anthracene	1.2		3.8	2.0	J								
di-n-butyl Phthalate	1.7		5.4	2.4	J								
Fluroanthene	0.92		2.9	5.0		g							
Pyrene	0.78		2.5	5.2		g							
Butylbenzylphthalate	0.60		1.9	ND	U	g							
3,3'-Dichlorobenzidine	1.6		5.0	ND	U	g							
Benzo(a)anthracene	1.1		3.4	3.4		g							
bis(2-Ethylhexyl) Phthalate	1.1		3.5	61		g							
Chrysene	1.2		3.9	4.1		g							
di-n-Octylphthalate	0.62		2.0	ND	U	g							
Benzo(b)fluoranthene	1.2		3.7	2.4	J								
Benzo(k)fluoranthene	2.0		6.4	3.5	J								
Benzo(a)pyrene	1.1		3.4	3.0	J								
Indeno(1,2,3-c,d)pyrene	0.73		2.3	1.4	J								
Dibenzo(a,h)anthracene	0.60		1.9	ND	U	g							
Benzo(g,h,i)perylene	0.86		2.8	1.4	J								

ANALYTICAL DATA SUMMARY
BACKGROUND CHARACTERIZATION

Base: Kotzebue LRRS						Table 2.1.1								
Site: Background Samples						Analytical Data Summary								
Extraction Method: EPA Method 3550						Method AK101								
Analytical Method: Method AK101														
Matrix: Soil														
Units: mg/kg														
			Environmental Samples											
		Field ID:		SS2-01				SS3-01						
		Batch ID:		H700				H700						
Parameters	MDL		PQL	Result	Validity	Comments	PQL	Result	Validity	Comments				
Gasoline Hydrocarbons	1.7		19	ND	UJ	b	8.7	ND	U	g				

Base: Kotzebue LRRS						Table 2.1.1							
Site: Background Samples						Analytical Data Summary							
Extraction Method: EPA Method 3550						Method AK101							
Analytical Method: Method AK101													
Matrix: Soil													
Units: mg/kg													
			Environmental Samples										
		Field ID:		SS4-01									
		Batch ID:		H718									
Parameters	MDL		PQL	Result	Validity	Comments							
Gasoline Hydrocarbons	1.7		8.2	ND	UJ	c,d							

Base: Kotzebue LRRS						Table 2.1.2							
Site: Background Samples						Analytical Data Summary							
Extraction Method: EPA Method 3550						Method AK102							
Analytical Method: Method AK102													
Matrix: Soil													
Units: mg/kg													
			Environmental Samples										
		Field ID:		SB1-7.5									
		Batch ID:		H599									
Parameters	MDL		PQL	Result	Validity	Comments							
Diesel Hydrocarbons	0.9		3.2	3.4		g							

Base: Kotzebue LRRS						Table 2.1.2							
Site: Background Samples						Analytical Data Summary							
Extraction Method: EPA Method 3550						Method AK102							
Analytical Method: Method AK102													
Matrix: Soil													
Units: mg/kg													
			Environmental Samples										
		Field ID:		SD2-01				SD3-01					
		Batch ID:		H700				H700					
Parameters	MDL		PQL	Result	Validity	Comments	PQL	Result	Validity	Comments			
Diesel Hydrocarbons	0.9		71	380		g	8.4	16		g			

Base: Kotzebue LRRS						Table 2.1.2						
Site: Background Samples						Analytical Data Summary						
Extraction Method: EPA Method 3550						Method AK102						
Analytical Method: Method AK102												
Matrix: Soil												
Units: mg/kg												
			Environmental Samples									
		Field ID:		SS2-01				SS3-01				
		Batch ID:		H700				H700				
Parameters	MDL		PQL	Result	Validity	Comments	PQL	Result	Validity	Comments		
Diesel Hydrocarbons	0.9		34	1200		g	11	11		g		

Base: Kotzebue LRRS						Table 2.1.2								
Site: Background Samples						Analytical Data Summary								
Extraction Method: EPA Method 3550						Method AK102								
Analytical Method: Method AK102														
Matrix: Soil														
Units: mg/kg														
			Environmental Samples											
		Field ID:		SS4-01				SD4-01				SS1A-01		
		Batch ID:		H718				H718				H718		
Parameters	MDL		PQL	Result	Validity	Comments	PQL	Result	Validity	Comments	PQL	Result	Validity	Comments
Diesel Hydrocarbons	0.9		11	43		g	9.9	45		g	15	120		g

Table 2.1.2
Analytical Data Summary
Method AK102

Base: Kotzebue LRRS
Site: Background Samples
Extraction Method: EPA Method 3550
Analytical Method: Method AK102
Matrix: Soil
Units: mg/kg

			Environmental Samples											
		Field ID:		SS1B-01				SS1C-01				SS4-01 DUP		
		Batch ID:		H718				H718				H718		
Parameters	MDL		PQL	Result	Validity	Comments	PQL	Result	Validity	Comments	PQL	Result	Validity	Comments
Diesel Hydrocarbons	0.9		7.7	120		g	7.8	5.8	J		11	39		g

Base: Kotzebue LRRS						Table 2.1.2							
Site: Background Samples						Analytical Data Summary							
Extraction Method: EPA Method 3550						Method AK102							
Analytical Method: Method AK102													
Matrix: Soil													
Units: mg/kg													
			Environmental Samples										
		Field ID:		SS2-02									
		Batch ID:		H909									
Parameters	MDL		PQL	Result	Validity	Comments							
Diesel Hydrocarbons	0.9		25	2600		g							

Table 2.1.3
Analytical Data Summary
EPA Method 6010

Base: Kotzebue LRRS
Site: Background Samples
Extraction Method: EPA Method 3050
Analytical Method: EPA Method 6010
Matrix: Soil
Units: mg/kg

		Environmental Samples				
		Field ID:	SB1-10.5			
		Batch ID:	H599			
Parameters	MDL	PQL	Result	Validity	Comments	
Aluminum	0.96	4	7600	J	a,c	
Antimony	3.2	10	ND	UJ	c	
Arsenic	2.8	10	800		g	
Barium	0.43	2	150		g	
Beryllium	0.019	0.1	0.1		g	
Cadmium	0.56	2	ND	U	g	
Calcium	2.1	8	23000	J	c	
Chromium, total	0.19	0.7	12		g	
Cobalt	0.28	1	6		g	
Copper	0.077	0.3	90		g	
Iron	0.58	2	12000	J	c	
Magnesium	1.3	5	8200	J	c	
Manganese	0.32	1	210	J	c	
Molybdenum	0.21	0.8	0.6	J		
Nickel	0.57	2	22		g	
Potassium	16	60	230		g	
Selenium	3.2	10	5	J		
Silver	0.13	0.5	ND	U	g	
Sodium	6.5	20	220		a	
Thallium	1.3	5	6		g	
Vanadium	0.12	0.5	19	J	c	
Zinc	0.22	0.9	67		g	

Base: Kotzebue LRRS						Table 2.1.3								
Site: Background Samples						Analytical Data Summary								
Extraction Method: EPA Method 3050						EPA Method 6010								
Analytical Method: EPA Method 6010														
Matrix: Soil														
Units: mg/kg														
			Environmental Samples											
		Field ID:		SD2-01				SD3-01						
		Batch ID:		H700				H700						
Parameters	MDL		PQL	Result	Validity	Comments	PQL	Result	Validity	Comments				
Aluminum	0.96		44	3400	J	a,c	5	19000	J	c				
Antimony	3.2		140	ND	UJ	c	20	ND	UJ	c				
Arsenic	2.8		130	ND	U	g	10	6	J	g				
Barium	0.43		20	140		g	2	230		g				
Beryllium	0.019		0.9	ND	U	g	0.1	0.5		g				
Cadmium	0.56		26	ND	U	g	3	ND	U	g				
Calcium	2.1		97	5000	J	c	11	10000	J	c				
Chromium, total	0.19		8.6	8.8		g	0.9	32		g				
Cobalt	0.28		13	ND	U	g	1	14		g				
Copper	0.077		3.5	20		a	0.4	23		a				
Iron	0.58		26	4700	J	c	3	32000	J	c				
Magnesium	1.3		60	1400	J	c	7	10000	J	c				
Manganese	0.32		14	110	J	c	2	410	J	c				
Molybdenum	0.21		9.7	ND	U	g	1.1	ND	U	g				
Nickel	0.57		26	10	J	g	3	40		g				
Potassium	16		710	400	J	c	80	1600	J	c				
Selenium	3.2		150	ND	U	g	20	9	J					
Silver	0.13		5.7	ND	U	g	0.6	0.7		g				
Sodium	6.5		300	300	J	a	30	160		a				
Thallium	1.3		57	ND	UJ	g	6	17		g				
Vanadium	0.12		5.5	10	J	c	0.6	44	J	c				
Zinc	0.22		11	22		a	1.2	85		a				

Base: Kotzebue LRRS

Site: Background Samples

Extraction Method: EPA Method 3050

Analytical Method: EPA Method 6010

Matrix: Soil

Units: mg/kg

Table 2.1.3
Analytical Data Summary
EPA Method 6010

			Environmental Samples											
		Field ID:		SS2-01				SS3-01						
		Batch ID:		H700				H700						
Parameters	MDL		PQL	Result	Validity	Comments	PQL	Result	Validity	Comments				
Aluminum	0.96		13	4900	J	a,c	9	35000	J	a,c				
Antimony	3.2		40	ND	UJ	c	30	ND	UJ	c				
Arsenic	2.8		40	ND	U	g	30	20	J					
Barium	0.43		6	100		g	4	540		g				
Beryllium	0.019		0.3	0.2	J		0.2	1.0		g				
Cadmium	0.56		8	ND	U	g	5	ND	U	g				
Calcium	2.1		28	3100	J	c	21	15000	J	c				
Chromium, total	0.19		2.5	11		g	1.8	63		g				
Cobalt	0.28		4	2	J		3	22		g				
Copper	0.077		1.0	20		a	0.7	42		a				
Iron	0.58		8	4000	J	c	6	57000	J	c				
Magnesium	1.3		18	950	J	c	13	14000	J	c				
Manganese	0.32		4	37	J	c	3	620	J	c				
Molybdenum	0.21		2.9	1	J		2.1	ND	U	g				
Nickel	0.57		8	7	J		5	70		g				
Potassium	16		210	490	J	c	150	3100	J	c				
Selenium	3.2		40	ND	U	g	30	10	J					
Silver	0.13		1.7	ND	U	g	1.2	1	J					
Sodium	6.5		90	130		a	60	370		a				
Thallium	1.3		17	ND	U	g	12	30		g				
Vanadium	0.12		1.6	10	J	c	1.2	81	J	c				
Zinc	0.22		3.3	8.6		a	2.4	120		a				

Base: Kotzebue LRRS						Table 2.1.3								
Site: Background Samples						Analytical Data Summary								
Extraction Method: EPA Method 3050						EPA Method 6010								
Analytical Method: EPA Method 6010														
Matrix: Soil														
Units: mg/kg														
			Environmental Samples											
		Field ID:		SD4-01				SS1A-01				SS1B-01		
		Batch ID:		H718				H718				H718		
Parameters	MDL		PQL	Result	Validity	Comments	PQL	Result	Validity	Comments	PQL	Result	Validity	Comments
Aluminum	0.96		4	21000	J	a,c	6	24000	J	a,c	6	10000	J	a,c
Antimony	3.2		10	ND	UJ	c	20	ND	UJ	c	20	ND	UJ	c
Arsenic	2.8		10	9	J		20	10	J		20	8	J	
Barium	0.43		2	250		g	3	320		g	2	170		g
Beryllium	0.019		0.1	0.6		g	0.1	0.7		g	0.1	0.2		g
Cadmium	0.56		3	ND	U	g	3	ND	U	g	3	ND	U	g
Calcium	2.1		10	5100	J	c	12	7400	J	c	12	18000	J	c
Chromium, total	0.19		0.9	37		g	1.1	41		g	1.1	22		g
Cobalt	0.28		1	13		g	2	16		g	2	9		g
Copper	0.077		0.4	25		a	0.4	26		a	0.4	15		a
Iron	0.58		3	32000	J	c	3	40000	J	c	3	18000	J	c
Magnesium	1.3		6	8300	J	c	8	9700	J	c	8	11000	J	c
Manganese	0.32		1	340	J	c	2	610	J	c	2	390	J	c
Molybdenum	0.21		1.0	ND	U	g	1.2	0.5	J		1.2	ND	U	g
Nickel	0.57		3	40		g	3	46		g	3	52		g
Potassium	16		70	1700	J	c	90	2300	J	c	90	800	J	c
Selenium	3.2		10	10	J		20	10	J		20	6		g
Silver	0.13		0.6	0.8		g	0.7	0.9		g	0.7	ND	U	g
Sodium	6.5		30	160		a	40	260		a	40	340		a
Thallium	1.3		6	18		g	7	23		g	7	13		g
Vanadium	0.12		0.6	52	J	c	0.7	57	J	c	0.7	30	J	c
Zinc	0.22		1.1	91		a	1.4	99		a	1.4	150		a

Base: Kotzebue LRRS
Site: Background Samples
Extraction Method: EPA Method 3050
Analytical Method: EPA Method 6010
Matrix: Soil
Units: mg/kg

Table 2.1.3
Analytical Data Summary
EPA Method 6010

			Environmental Samples							
		Field ID:		SS1C-01				SS4-01		
		Batch ID:		H718				H718		
Parameters	MDL		PQL	Result	Validity	Comments	PQL	Result	Validity	Comments
Aluminum	0.96		3	8100	J	a,c	5	26000	J	a,c
Antimony	3.2		10	ND	UJ	c	20	ND	UJ	c
Arsenic	2.8		10	5	J		10	10	J	
Barium	0.43		1	130		g	2	320		g
Beryllium	0.019		0.1	0.2		g	0.1	0.8		g
Cadmium	0.56		2	ND	U	g	3	ND	U	g
Calcium	2.1		7	22000	J	c	11	6900	J	c
Chromium, total	0.19		0.6	24		g	1.0	43		g
Cobalt	0.28		1	7		g	1	18		g
Copper	0.077		0.3	13		a	0.4	31		a
Iron	0.58		2	16000	J	c	3	41000	J	c
Magnesium	1.3		4	9800	J	c	7	9300	J	c
Manganese	0.32		1	280	J	c	2	660	J	c
Molybdenum	0.21		0.7	ND	U	g	1.1	ND	U	g
Nickel	0.57		2	30		g	3	49		g
Potassium	16		50	600	J	c	80	2600	J	c
Selenium	3.2		10	5	J		20	10	J	
Silver	0.13		0.4	ND	U	g	0.6	0.9		g
Sodium	6.5		20	180		a	30	250		a
Thallium	1.3		4	8		g	6	25		g
Vanadium	0.12		0.4	31	J	c	0.6	62	J	c
Zinc	0.22		0.8	36		a	1.2	100		a,k

Base: Kotzebue LRRS					Table 2.1.4			
Site: Background Samples					Analytical Data Summary			
Extraction Method: See below					EPA Method 7000			
Analytical Method: See below								
Matrix: Soil								
Units: mg/kg								
				Environmental Samples				
			Field ID:		SB1-10.5			
	EPA		Batch ID:		H599			
Parameters	Method	MDL		PQL	Result	Validity	Comments	
					Dilution 2.00			
Lead	3050/7421	0.12		0.4	3.7	J	c	
Mercury	7471	0.0020		0.03	0.03	B	a	

Base: Kotzebue LRRS					Table 2.1.4										
Site: Background Samples					Analytical Data Summary										
Extraction Method: See below					EPA Method 7000										
Analytical Method: See below															
Matrix: Soil															
Units: mg/kg															
				Environmental Samples											
			Field ID:		SD2-01				SD3-01						
	EPA		Batch ID:		H700				H700						
Parameters	Method	MDL		PQL	Result	Validity	Comments	PQL	Result	Validity	Comments				
Lead	3050/7421	0.12		5.2	3	J		0.6	10*		g				
Mercury	7471	0.0020		0.39	0.1	J	a	0.05	0.05		a				
* Sample diluted at a factor of 5.00.															

Base: Kotzebue LRRS					Table 2.1.4									
Site: Background Samples					Analytical Data Summary									
Extraction Method: See below					EPA Method 7000									
Analytical Method: See below														
Matrix: Soil														
Units: mg/kg														
				Environmental Samples										
			Field ID:		SS2-01				SS3-01					
	EPA		Batch ID:		H700				H700					
Parameters	Method	MDL		PQL	Result	Validity	Comments	PQL	Result	Validity	Comments			
Lead	3050/7421	0.12		1.6	5.0		g	1.2	20*		g			
Mercury	7471	0.0020		0.12	0.20		a	0.08	0.12		a			
* Sample diluted at a factor of 5.00.														

Base: Kotzebue LRRS					Table 2.1.4										
Site: Background Samples					Analytical Data Summary										
Extraction Method: See below					EPA Method 7000										
Analytical Method: See below															
Matrix: Soil															
Units: mg/kg															
				Environmental Samples											
			Field ID:		SD4-01				SS1A-01				SS1B-01		
	EPA		Batch ID:		H718				H718				H718		
Parameters	Method	MDL		PQL	Result	Validity	Comments	PQL	Result	Validity	Comments	PQL	Result	Validity	Comments
Lead	3050/7421	0.12		0.5	12*		g	0.7	16*		g	0.7	6.6*		g
Mercury	7471	0.0020		0.03	0.03	B J	a	0.04	0.05		a	0.05	0.02	B J	a
* Sample diluted at a factor of 5.00.															

Base: Kotzebue LRRS						Table 2.1.4									
Site: Background Samples						Analytical Data Summary									
Extraction Method: See below						EPA Method 7000									
Analytical Method: See below															
Matrix: Soil															
Units: mg/kg															
				Environmental Samples											
			Field ID:		SS1C-01				SS4-01						
	EPA		Batch ID:		H718				H718						
Parameters	Method	MDL		PQL	Result	Validity	Comments	PQL	Result	Validity	Comments				
Lead	3050/7421	0.12		0.4	5.4		g	0.6	14*		g				
Mercury	7471	0.0020		0.03	0.02	B J	a	0.04	0.04	B J	a				
* Sample diluted at a factor of 5.00.															

Base: Kotzebue LRRS						Table 2.1.6									
Site: Background Samples						Analytical Data Summary									
Extraction Method: EPA Method 3550						EPA Method 8081									
Analytical Method: EPA Method 8081															
Matrix: Soil															
Units: mg/kg															
				Environmental Samples											
			Field ID:		SB1-0.5		SB1-0.5								
			Batch ID:		H599		H599								
	DB-5	DB-608		DB-5	DB-5	DB-608	DB-608								
Parameters	MDL	MDL		PQL	Result	PQL	Result	Validity	Comments						
alpha BHC	0.0001	0.0001		0.00020	ND	0.00018	ND	U	g						
beta BHC	0.0001	0.0001		0.00031	ND	0.00029	ND	U	g						
delta BHC	0.0001	0.0001		0.00032	0.0014	0.00024	ND	U	h						
gamma BHC (Lindane)	0.0001	0.0001		0.00025	ND	0.00021	ND	U	g						
Heptachlor	0.0001	0.0001		0.0003	ND	0.0003	ND	U	g						
Aldrin	0.0001	0.0001		0.00020	ND	0.00026	ND	U	g						
Heptachlor Epoxide	0.0001	0.0001		0.00025	0.012	0.00032	ND	U	h						
Endosulfan I	0.0001	0.0001		0.00037	ND	0.00037	ND	U	g						
Dieldrin	0.0001	0.0002		0.0004	ND	0.0005	ND	U	g						
4,4'-DDE	0.0001	0.0002		0.0003	0.0014	0.0005	0.0012		g						
Endrin	0.0001	0.0001		0.0003	ND	0.0003	ND	U	g						
Endosulfan II	0.0002	0.0002		0.0005	ND	0.0005	ND	U	g						
4,4'-DDD	0.0001	0.0001		0.0004	ND	0.0005	ND	U	g						
Endosulfan Sulfate	0.0002	0.0002		0.0008	ND	0.0008	ND	U	g						
4,4'-DDT	0.0002	0.0001		0.0007	0.0024	0.0004	0.0020		g						
Methoxychlor	0.0008	0.0011		0.0028	ND	0.0035	ND	U	g						
Endrin Aldehyde	0.0002	0.0003		0.0007	ND	0.0009	ND	U	g						
gamma-Chlordane	0.0001	0.0001		0.00017	ND	0.00026	ND	U	g						
alpha-Chlordane	0.0001	0.0001		0.00020	ND	0.00037	ND	U	g						
Toxaphene	0.007	0.009		0.02	ND	0.03	ND	U	g						
Arochlor 1016	0.009	0.009		0.03	ND	0.03	ND	U	g						
Arochlor 1242	0.005	0.008		0.02	ND	0.02	ND	U	g						
Arochlor 1248	0.004	0.0010		0.01	ND	0.02	ND	U	g						
Arochlor 1254	0.011	0.009		0.03	ND	0.03	ND	U	g						
Arochlor 1260	0.009	0.005		0.03	ND	0.01	ND	U	g						
Arochlor 1221	0.011	0.010		0.03	ND	0.03	ND	U	g						
Arochlor 1232	0.005	0.005		0.01	ND	0.00	ND	U	g						

Base: Kotzebue LRRS						Table 2.1.5									
Site: Background Samples						Analytical Data Summary									
Extraction Method: EPA Method 3550						EPA Method 8081									
Analytical Method: EPA Method 8081															
Matrix: Soil															
Units: mg/kg															
				Environmental Samples											
			Field ID:		SD2-01		SD2-01				SD3-01		SD3-01		
			Batch ID:		H700		H700				H700		H700		
	DB-5	DB-608		DB-5	DB-5	DB-608	DB-608			DB-5	DB-5	DB-608	DB-608		
Parameters	MDL	MDL		PQL	Result	PQL	Result	Validity	Comments	PQL	Result	PQL	Result	Validity	Comments
					Dilution 10		Dilution 10				Dilution 10		Dilution 10		
alpha BHC	0.0001	0.0001		0.026	ND	0.023	ND	U	g	0.0032	ND	0.0028	ND	U	g
beta BHC	0.0001	0.0001		0.039	ND	0.037	ND	U	g	0.0048	ND	0.0044	ND	U	g
delta BHC	0.0001	0.0001		0.041	ND	0.030	ND	U	g	0.0049	ND	0.0037	ND	U	g
gamma BHC (Lindane)	0.0001	0.0001		0.032	ND	0.027	ND	U	g	0.0039	ND	0.0032	ND	U	g
Heptachlor	0.0001	0.0001		0.037	ND	0.036	ND	U	g	0.0044	ND	0.0044	ND	U	g
Aldrin	0.0001	0.0001		0.025	ND	0.033	ND	U	g	0.0031	ND	0.0040	ND	U	g
Heptachlor Epoxide	0.0001	0.0001		0.032	ND	0.041	ND	U	a	0.0039	0.0036	0.0049	0.0047	J	a,n
Endosulfan I	0.0001	0.0001		0.047	ND	0.047	ND	U	g	0.0056	ND	0.0056	ND	U	g
Dieldrin	0.0001	0.0002		0.050	ND	0.062	ND	U	g	0.0060	0.0088	0.0075	ND	U	h
4,4'-DDE	0.0001	0.0002		0.041	ND	0.061	ND	U	g	0.0050	ND	0.0074	ND	U	g
Endrin	0.0001	0.0001		0.041	ND	0.042	ND	U	g	0.0049	0.0098	0.0051	ND	U	h
Endosulfan II	0.0002	0.0002		0.067	0.086	0.065	ND	U	a,h	0.0081	0.014	0.0078	ND	U	a,h
4,4'-DDD	0.0001	0.0001		0.050	ND	0.059	ND	U	g	0.0060	0.022	0.0071	0.022		g
Endosulfan Sulfate	0.0002	0.0002		0.10	ND	0.10	ND	U	g	0.012	ND	0.012	ND	U	g
4,4'-DDT	0.0002	0.0001		0.095	ND	0.054	ND	U	a	0.011	ND	0.0066	ND	U	a
Methoxychlor	0.0008	0.0011		0.35	ND	0.45	ND	U	g	0.043	ND	0.054	ND	U	g
Endrin Aldehyde	0.0002	0.0003		0.092	ND	0.11	ND	U	a	0.011	ND	0.013	ND	U	a
gamma-Chlordane	0.0001	0.0001		0.022	ND	0.033	ND	U	g	0.0027	ND	0.0040	ND	U	g
alpha-Chlordane	0.0001	0.0001		0.026	0.026	0.047	0.064	J	n	0.0032	ND	0.0056	ND	U	g
Toxaphene	0.007	0.009		3.1	ND	3.7	ND	U	g	0.37	ND	0.45	ND	U	g
Arochlor 1016	0.009	0.009		3.6	ND	3.5	ND	U	g	0.44	ND	0.43	ND	U	g
Arochlor 1242	0.005	0.008		2.2	ND	3.1	ND	U	g	0.27	ND	0.38	ND	U	g
Arochlor 1248	0.004	0.0010		1.5	ND	2.0	ND	U	g	0.18	ND	0.24	ND	U	g
Arochlor 1254	0.011	0.009		4.4	ND	3.8	ND	U	g	0.53	ND	0.45	ND	U	g
Arochlor 1260	0.009	0.005		3.6	ND	1.9	ND	U	g	0.43	ND	0.23	ND	U	g
Arochlor 1221	0.011	0.010		4.3	ND	3.9	ND	U	g	0.52	ND	0.47	ND	U	g
Arochlor 1232	0.005	0.005		1.9	ND	0.19	ND	U	g	0.23	ND	0.02	ND	U	g

Base: Kotzebue LRRS
Site: Background Samples
Extraction Method: EPA Method 3550
Analytical Method: EPA Method 8081
Matrix: Soil
Units: mg/kg

Table 2.1.6
Analytical Data Summary
EPA Method 8081

				Environmental Samples											
			Field ID:		SS2-01		SS2-01					SS3-01		SS3-01		
			Batch ID:		H700		H700					H700		H700		
	DB-5	DB-608		DB-5	DB-5	DB-608	DB-608			DB-5	DB-5	DB-608	DB-608		
Parameters	MDL	MDL		PQL	Result	PQL	Result	Validity	Comments	PQL	Result	PQL	Result	Validity	Comments
alpha BHC	0.0001	0.0001		0.0010	ND	0.00090	ND	U	g	0.00033	ND	0.00030	ND	U	g
beta BHC	0.0001	0.0001		0.0015	0.014	0.0014	0.0064	J	n	0.00050	ND	0.00047	ND	U	g
delta BHC	0.0001	0.0001		0.0016	ND	0.0012	ND	U	g	0.00052	0.0023	0.00039	ND	U	h
gamma BHC (Lindane)	0.0001	0.0001		0.0012	0.011	0.0010	0.0086	J	n	0.00041	0.0020	0.00034	ND	U	h
Heptachlor	0.0001	0.0001		0.0014	ND	0.0014	ND	U	g	0.0005	ND	0.0005	ND	U	g
Aldrin	0.0001	0.0001		0.00098	ND	0.0013	ND	U	g	0.00032	ND	0.00042	ND	U	g
Heptachlor Epoxide	0.0001	0.0001		0.0012	0.0084	0.0016	0.015	J	a,n	0.00041	ND	0.00052	ND	U	a
Endosulfan I	0.0001	0.0001		0.0018	0.0086	0.0018	0.0068	J	n	0.00060	ND	0.00060	ND	U	g
Dieldrin	0.0001	0.0002		0.0019	ND	0.0024	ND	U	g	0.0006	0.0020	0.0008	0.0012	J	n
4,4'-DDE	0.0001	0.0002		0.0016	ND	0.0024	ND	U	g	0.0005	0.0036	0.0008	0.0033		g
Endrin	0.0001	0.0001		0.0016	0.030	0.0016	ND	U	h	0.0005	0.0015	0.0005	ND	U	h
Endosulfan II	0.0002	0.0002		0.0026	ND	0.0025	ND	U	a	0.0009	ND	0.0008	ND	U	a
4,4'-DDD	0.0001	0.0001		0.0019	ND	0.0023	ND	U	g	0.0006	0.0026	0.0008	ND	U	h
Endosulfan Sulfate	0.0002	0.0002		0.0039	ND	0.0039	ND	U	g	0.0013	ND	0.0013	ND	U	g
4,4'-DDT	0.0002	0.0001		0.0036	0.050	0.0021	0.036		a	0.0012	0.0023	0.0007	0.0030	B	a
Methoxychlor	0.0008	0.0011		0.014	0.043	0.017	0.041		g	0.0045	ND	0.0057	ND	U	g
Endrin Aldehyde	0.0002	0.0003		0.0035	0.0074	0.0042	ND	U	a,h	0.0012	0.0004	0.0014	ND	U	a,h
gamma-Chlordane	0.0001	0.0001		0.00085	0.0026	0.0013	0.0074	J	n	0.00028	0.00022	0.00042	ND	U	h
alpha-Chlordane	0.0001	0.0001		0.0010	ND	0.0018	ND	U	g	0.00033	ND	0.00060	ND	U	g
Toxaphene	0.007	0.009		0.12	ND	0.14	ND	U	g	0.04	ND	0.05	ND	U	g
Arochlor 1016	0.009	0.009		0.14	ND	0.14	ND	U	g	0.05	ND	0.04	ND	U	g
Arochlor 1242	0.005	0.008		0.09	ND	0.12	ND	U	g	0.03	ND	0.04	ND	U	g
Arochlor 1248	0.004	0.0010		0.06	ND	0.08	ND	U	g	0.02	ND	0.02	ND	U	g
Arochlor 1254	0.011	0.009		0.17	ND	0.14	ND	U	g	0.06	ND	0.05	ND	U	g
Arochlor 1260	0.009	0.005		0.14	ND	0.07	ND	U	g	0.05	ND	0.02	ND	U	g
Arochlor 1221	0.011	0.010		0.17	ND	0.15	ND	U	g	0.06	ND	0.05	ND	U	g
Arochlor 1232	0.005	0.005		0.07	ND	0.011	ND	U	g	0.02	ND	0.00	ND	U	g

Base: Kotzebue LRRS
Site: Background Samples
Extraction Method: EPA Method 3550
Analytical Method: EPA Method 8081
Matrix: Soil
Units: mg/kg

Table 2.1.6
Analytical Data Summary
EPA Method 8081

				Environmental Samples											
			Field ID:		SD4-01		SD4-01					SS1A-01		SS1A-01	
			Batch ID:		H718		H718					H718		H718	
	DB-5	DB-608		DB-5	DB-5	DB-608	DB-608			DB-5	DB-5	DB-608	DB-608		
Parameters	MDL	MDL		PQL	Result	PQL	Result	Validity	Comments	PQL	Result	PQL	Result	Validity	Comments
alpha BHC	0.0001	0.0001		0.00031	0.0030	0.00028	0.0029	J	n	0.00045	ND	0.00040	ND	U	g
beta BHC	0.0001	0.0001		0.00047	0.0016	0.00044	0.0016	J	n	0.00068	0.0023	0.00064	ND	U	h
delta BHC	0.0001	0.0001		0.00048	ND	0.00036	ND	U	g	0.00070	ND	0.00052	ND	U	g
gamma BHC (Lindane)	0.0001	0.0001		0.00038	0.0021	0.00032	0.0020	J	n	0.00055	ND	0.00046	ND	U	g
Heptachlor	0.0001	0.0001		0.0004	ND	0.0004	ND	U	g	0.0006	ND	0.0006	ND	U	g
Aldrin	0.0001	0.0001		0.00030	ND	0.00039	ND	U	g	0.00044	ND	0.00057	ND	U	g
Heptachlor Epoxide	0.0001	0.0001		0.00038	ND	0.00048	ND	U	a	0.00055	0.0013	0.00070	ND	U	a,h
Endosulfan I	0.0001	0.0001		0.00056	ND	0.00056	ND	U	g	0.00081	ND	0.00081	ND	U	g
Dieldrin	0.0001	0.0002		0.0006	ND	0.0007	ND	U	g	0.0009	ND	0.0011	ND	U	g
4,4'-DDE	0.0001	0.0002		0.0005	0.0034	0.0007	0.0033		g	0.0007	ND	0.0011	ND	U	g
Endrin	0.0001	0.0001		0.0005	0.0019	0.0005	ND	U	h	0.0007	0.0018	0.0007	0.0026	J	n
Endosulfan II	0.0002	0.0002		0.0008	0.0019	0.0008	ND	U	h	0.0012	0.0033	0.0011	ND	U	a,h
4,4'-DDD	0.0001	0.0001		0.0006	ND	0.0007	ND	U	g	0.0009	0.0035	0.0010	0.0054		g
Endosulfan Sulfate	0.0002	0.0002		0.0012	ND	0.0012	ND	U	g	0.0018	ND	0.0018	ND	U	g
4,4'-DDT	0.0002	0.0001		0.0011	0.0026	0.0006	0.0026	B	a	0.0016	0.0036	0.0009	0.0049	B J	a,n
Methoxychlor	0.0008	0.0011		0.0042	ND	0.0053	ND	U	g	0.0061	ND	0.0077	ND	U	g
Endrin Aldehyde	0.0002	0.0003		0.0011	0.0005	0.0013	ND	U	a,h	0.0016	0.0020	0.0019	ND	U	a,h
gamma-Chlordane	0.0001	0.0001		0.00026	0.0010	0.00039	0.00036	J	n	0.00038	0.0013	0.00057	0.0077	J	n
alpha-Chlordane	0.0001	0.0001		0.00031	0.00066	0.00056	0.00071	J	n	0.00045	ND	0.00081	ND	U	g
Toxaphene	0.007	0.009		0.04	ND	0.04	ND	U	g	0.05	ND	0.06	ND	U	g
Arochlor 1016	0.009	0.009		0.04	ND	0.04	ND	U	g	0.06	ND	0.06	ND	U	g
Arochlor 1242	0.005	0.008		0.03	ND	0.04	ND	U	g	0.04	ND	0.05	ND	U	g
Arochlor 1248	0.004	0.0010		0.02	ND	0.02	ND	U	g	0.03	ND	0.03	ND	U	g
Arochlor 1254	0.011	0.009		0.05	ND	0.04	ND	U	g	0.08	ND	0.06	ND	U	g
Arochlor 1260	0.009	0.005		0.04	ND	0.02	ND	U	g	0.06	0.02	0.03	0.02	J	
Arochlor 1221	0.011	0.010		0.05	ND	0.05	ND	U	g	0.08	ND	0.07	ND	U	g
Arochlor 1232	0.005	0.005		0.02	ND	0.00	ND	U	g	0.03	ND	0.00	ND	U	g

Base: Kotzebue LRRS						Table 2.1.6									
Site: Background Samples						Analytical Data Summary									
Extraction Method: EPA Method 3550						EPA Method 8081									
Analytical Method: EPA Method 8081															
Matrix: Soil															
Units: mg/kg															
				Environmental Samples											
			Field ID:		SS1B-01		SS1B-01				SS1C-01		SS1C-01		
			Batch ID:		H718		H718				H718		H718		
	DB-5	DB-608		DB-5	DB-5	DB-608	DB-608			DB-5	DB-5	DB-608	DB-608		
Parameters	MDL	MDL		PQL	Result	PQL	Result	Validity	Comments	PQL	Result	PQL	Result	Validity	Comments
alpha BHC	0.0001	0.0001		0.00022	0.0016	0.00020	ND	U	h	0.00022	ND	0.00020	ND	U	g
beta BHC	0.0001	0.0001		0.00034	ND	0.00032	ND	U	g	0.00034	0.0015	0.00032	ND	U	h
delta BHC	0.0001	0.0001		0.00036	ND	0.00026	ND	U	g	0.00035	ND	0.00026	ND	U	g
gamma BHC (Lindane)	0.0001	0.0001		0.00028	ND	0.00023	ND	U	g	0.00027	ND	0.00023	ND	U	g
Heptachlor	0.0001	0.0001		0.0003	ND	0.0003	ND	U	g	0.0003	ND	0.0003	ND	U	g
Aldrin	0.0001	0.0001		0.00022	ND	0.00028	ND	U	g	0.00022	ND	0.00028	ND	U	g
Heptachlor Epoxide	0.0001	0.0001		0.00028	0.0039	0.00035	ND	U	a,h	0.00027	ND	0.00035	ND	U	a
Endosulfan I	0.0001	0.0001		0.00040	0.00026	0.00040	ND	U	h	0.00040	ND	0.00040	ND	U	g
Dieldrin	0.0001	0.0002		0.0004	ND	0.0005	ND	U	g	0.0004	ND	0.0005	ND	U	g
4,4'-DDE	0.0001	0.0002		0.0004	0.0034	0.0005	0.0028		g	0.0004	0.0025	0.0005	ND	U	h
Endrin	0.0001	0.0001		0.0004	ND	0.0004	ND	U	g	0.0004	ND	0.0004	ND	U	g
Endosulfan II	0.0002	0.0002		0.0006	ND	0.0006	ND	U	a	0.0006	ND	0.0006	ND	U	a
4,4'-DDD	0.0001	0.0001		0.0004	0.0032	0.0005	0.0022		g	0.0004	ND	0.0005	ND	U	g
Endosulfan Sulfate	0.0002	0.0002		0.0009	ND	0.0009	ND	U	g	0.0009	ND	0.0009	ND	U	g
4,4'-DDT	0.0002	0.0001		0.0008	0.0062	0.0005	0.0037	J	a,n	0.0008	0.0026	0.0005	0.0026	B	a
Methoxychlor	0.0008	0.0011		0.0030	ND	0.0038	ND	U	g	0.0030	ND	0.0038	ND	U	g
Endrin Aldehyde	0.0002	0.0003		0.0008	ND	0.0009	ND	U	a	0.0008	ND	0.0009	ND	U	a
gamma-Chlordane	0.0001	0.0001		0.00019	ND	0.00028	ND	U	g	0.00019	ND	0.00028	ND	U	g
alpha-Chlordane	0.0001	0.0001		0.00022	ND	0.00040	ND	U	g	0.00022	ND	0.00040	ND	U	g
Toxaphene	0.007	0.009		0.03	ND	0.03	ND	U	g	0.03	ND	0.03	ND	U	g
Arochlor 1016	0.009	0.009		0.03	ND	0.03	ND	U	g	0.03	ND	0.03	ND	U	g
Arochlor 1242	0.005	0.008		0.02	ND	0.03	ND	U	g	0.02	ND	0.03	ND	U	g
Arochlor 1248	0.004	0.0010		0.01	ND	0.02	ND	U	g	0.01	ND	0.02	ND	U	g
Arochlor 1254	0.011	0.009		0.04	ND	0.03	ND	U	g	0.04	ND	0.03	ND	U	g
Arochlor 1260	0.009	0.005		0.03	ND	0.02	ND	U	g	0.03	ND	0.02	ND	U	g
Arochlor 1221	0.011	0.010		0.04	ND	0.03	ND	U	g	0.04	ND	0.03	ND	U	g
Arochlor 1232	0.005	0.005		0.02	ND	0.00	ND	U	g	0.02	ND	0.00	ND	U	g

Base: Kotzebue LRRS					Table 2.1.6					
Site: Background Samples					Analytical Data Summary					
Extraction Method: EPA Method 3550					EPA Method 8081					
Analytical Method: EPA Method 8081										
Matrix: Soil										
Units: mg/kg										
				Environmental Samples						
			Field ID:		SS4-01		SS4-01			
			Batch ID:		H718		H718			
	DB-5	DB-608		DB-5	DB-5	DB-608	DB-608			
Parameters	MDL	MDL		PQL	Result	PQL	Result	Validity	Comments	
alpha BHC	0.0001	0.0001		0.00033	0.0032	0.00029	0.0047	J	n	
beta BHC	0.0001	0.0001		0.00049	0.0014	0.00046	0.0018	J	n	
delta BHC	0.0001	0.0001		0.00051	0.0044	0.00038	ND	U	h	
gamma BHC (Lindane)	0.0001	0.0001		0.00040	0.0022	0.00033	ND	U	h	
Heptachlor	0.0001	0.0001		0.0005	ND	0.0005	ND	U	g	
Aldrin	0.0001	0.0001		0.00032	ND	0.00041	ND	U	g	
Heptachlor Epoxide	0.0001	0.0001		0.00040	0.017	0.00051	ND	U	a,h	
Endosulfan I	0.0001	0.0001		0.00058	0.00032	0.00058	ND	U	h	
Dieldrin	0.0001	0.0002		0.0006	0.0012	0.0008	0.0017	J	n	
4,4'-DDE	0.0001	0.0002		0.0005	0.0039	0.0008	0.0031		g	
Endrin	0.0001	0.0001		0.0005	0.0024	0.0005	0.0027	J	n	
Endosulfan II	0.0002	0.0002		0.0008	ND	0.0008	ND	U	a	
4,4'-DDD	0.0001	0.0001		0.0006	0.0031	0.0007	0.0023		g	
Endosulfan Sulfate	0.0002	0.0002		0.0013	ND	0.0013	ND	U	g	
4,4'-DDT	0.0002	0.0001		0.0012	0.0024	0.0007	0.0043	B J	a,n	
Methoxychlor	0.0008	0.0011		0.0044	ND	0.0056	ND	U	g	
Endrin Aldehyde	0.0002	0.0003		0.0012	0.0014	0.0014	0.0005	B J	a,n	
gamma-Chlordane	0.0001	0.0001		0.00028	0.00075	0.00041	0.00027	J	n	
alpha-Chlordane	0.0001	0.0001		0.00033	ND	0.00059	ND	U	g	
Toxaphene	0.007	0.009		0.04	ND	0.05	ND	U	g	
Arochlor 1016	0.009	0.009		0.05	ND	0.04	ND	U	g	
Arochlor 1242	0.005	0.008		0.03	ND	0.04	ND	U	g	
Arochlor 1248	0.004	0.0010		0.02	ND	0.02	ND	U	g	
Arochlor 1254	0.011	0.009		0.06	ND	0.05	ND	U	g	
Arochlor 1260	0.009	0.005		0.04	0.02	0.02	0.03	J		
Arochlor 1221	0.011	0.010		0.05	ND	0.05	ND	U	g	
Arochlor 1232	0.005	0.005		0.02	ND	0.02	ND	U	g	

Base: Kotzebue LRRS						Table 2.1.6								
Site: Background Samples						Analytical Data Summary								
Extraction Method: EPA Method 8260						EPA Method 8260								
Analytical Method: EPA Method 8260														
Matrix: Soil														
Units: mg/kg														
			Environmental Samples											
		Field ID:		SB1-9.0										
		Batch ID:		H599										
Parameters	MDL		PQL	Result	Validity	Comments								
Chloromethane	0.0009		0.003	ND	U	g								
Bromomethane	0.0008		0.003	ND	U	g								
Vinyl Chloride	0.0010		0.003	ND	U	g								
Chloroethane	0.0010		0.003	ND	U	g								
Methylene Chloride	0.0009		0.003	0.003	B	a								
Acetone	0.0039		0.01	ND	U	g								
Carbon Disulfide	0.0005		0.002	ND	U	g								
1,1-Dichloroethene	0.0012		0.004	ND	U	g								
1,1-Dichloroethane	0.0004		0.001	ND	U	g								
trans-1,2-Dichloroethene	0.0009		0.003	ND	U	g								
cis-1,2-Dichloroethylene	0.0011		0.004	ND	U	g								
Chloroform	0.0005		0.002	ND	U	g								
1,2-Dichloroethane	0.0005		0.002	ND	U	g								
Methyl Ethyl Ketone (2-butanone)	0.0025		0.008	ND	U	g								
1,1,1-Trichloroethane	0.0004		0.001	ND	U	g								
Carbon Tetrachloride	0.0010		0.003	ND	U	g								
Vinyl Acetate	0.0016		0.005	ND	U	g								
Bromodichloromethane	0.0006		0.002	ND	U	g								
1,2-Dichloropropane	0.0008		0.003	ND	U	g								
cis-1,3-Dichloropropene	0.0007		0.002	ND	U	g								
Trichloroethylene (tce)	0.0005		0.002	ND	U	g								
Dibromochloromethane	0.0003		0.001	ND	U	g								
1,1,2-Trichloroethane	0.0007		0.002	ND	U	g								
Benzene	0.0005		0.0016	ND	U	g								

Base: Kotzebue LRRS						Table 2.1.6							
Site: Background Samples						Analytical Data Summary							
Extraction Method: EPA Method 8260						EPA Method 8260							
Analytical Method: EPA Method 8260													
Matrix: Soil													
Units: mg/kg													
			Environmental Samples										
		Field ID:		SB1-9.0									
		Batch ID:		H599									
Parameters	MDL		PQL	Result	Validity	Comments							
trans-1,3-Dichloropropene	0.0005		0.002	ND	U	g							
2-Chloroethyl Vinyl Ether	0.0006		0.002	ND	U	g							
Bromoform	0.0013		0.004	ND	U	g							
Methyl Isobutyl Ketone	0.0015		0.005	ND	U	g							
2-Hexanone	0.0027		0.009	ND	U	g							
Tetrachloroethylene (pce)	0.0009		0.003	ND	U	g							
1,1,2,2-Tetrachloroethane	0.0009		0.0031	ND	U	g							
Toluene	0.0009		0.0031	ND	U	g							
Chlorobenzene	0.0007		0.002	ND	U	g							
Ethylbenzene	0.0004		0.0015	ND	U	g							
Styrene	0.0006		0.002	ND	U	g							
1,1,2-Trichloro-1,2,2-trifluoroethane	0.0007		0.002	ND	U	g							
Xylenes, total	0.0020		0.007	ND	U	g							
1,1,1,2-Tetrachloroethane	0.0010		0.003	ND	U	g							
1,2,3-Trichloropropane	0.0023		0.008	ND	U	g							
Bromochloromethane	0.0007		0.002	ND	U	g							
1-Chlorohexane	0.0007		0.002	ND	U	g							
Bromobenzene	0.007		0.0025	ND	U	g							

Base: Kotzebue LRRS						Table 2.1.6								
Site: Background Samples						Analytical Data Summary								
Extraction Method: EPA Method 8260						EPA Method 8260								
Analytical Method: EPA Method 8260														
Matrix: Soil														
Units: mg/kg														
			Environmental Samples											
		Field ID:		SD2-01				SD3-01				SD3-01RE		
		Batch ID:		H700				H700				H700		
Parameters	MDL		PQL	Result	Validity	Comments	PQL	Result	Validity	Comments	PQL	Result	Validity	Comments
Chloromethane	0.0009		0.049	ND	U	g	0.005	ND	UJ	b	0.005	ND	U	g
Bromomethane	0.0008		0.045	ND	U	g	0.004	ND	UJ	b	0.004	ND	U	g
Vinyl Chloride	0.0010		0.053	ND	U	g	0.005	ND	UJ	b	0.005	ND	U	g
Chloroethane	0.0010		0.056	ND	U	g	0.005	ND	UJ	b	0.005	ND	U	g
Methylene Chloride	0.0009		0.048	0.021	B J	a	0.005	0.002	B J	a,b	0.005	0.003	B J	a
Acetone	0.0039		0.22	0.24		g	0.02	0.04	J	b	0.02	0.07	J	
Carbon Disulfide	0.0005		0.030	ND	U	g	0.003	ND	UJ	b	0.003	ND	U	g
1,1-Dichloroethene	0.0012		0.064	ND	U	g	0.006	ND	UJ	b	0.006	ND	U	g
1,1-Dichloroethane	0.0004		0.020	ND	U	g	0.002	ND	UJ	b	0.002	ND	U	g
trans-1,2-Dichloroethene	0.0009		0.049	ND	U	g	0.005	ND	UJ	b	0.005	ND	U	g
cis-1,2-Dichloroethylene	0.0011		0.063	ND	U	g	0.006	ND	UJ	b	0.006	ND	U	g
Chloroform	0.0005		0.025	ND	U	g	0.002	ND	UJ	b	0.002	ND	U	g
1,2-Dichloroethane	0.0005		0.028	ND	U	g	0.003	ND	UJ	b	0.003	ND	U	g
Methyl Ethyl Ketone (2-butanone)	0.0025		0.14	ND	U	g	0.013	0.013	J	b	0.013	0.025		g
1,1,1-Trichloroethane	0.0004		0.024	ND	U	g	0.002	ND	UJ	b	0.002	ND	U	g
Carbon Tetrachloride	0.0010		0.054	ND	U	g	0.005	ND	UJ	b	0.005	ND	U	g
Vinyl Acetate	0.0016		0.089	ND	U	g	0.008	ND	UJ	b	0.008	ND	U	g
Bromodichloromethane	0.0006		0.036	ND	U	g	0.003	ND	UJ	b	0.003	ND	U	g
1,2-Dichloropropane	0.0008		0.046	ND	U	g	0.004	ND	UJ	b	0.004	ND	U	g
cis-1,3-Dichloropropene	0.0007		0.038	ND	U	g	0.004	ND	UJ	b	0.004	ND	U	g
Trichloroethylene (tce)	0.0005		0.030	ND	U	g	0.003	ND	UJ	b	0.003	ND	U	g
Dibromochloromethane	0.0003		0.019	ND	U	g	0.002	ND	UJ	b	0.002	ND	U	g
1,1,2-Trichloroethane	0.0007		0.038	ND	U	g	0.004	ND	UJ	b	0.004	ND	U	g
Benzene	0.0005		0.026	ND	U	g	0.0025	ND	UJ	b	0.0025	ND	U	g

Base: Kotzebue LRRS						Table 2.1.6								
Site: Background Samples						Analytical Data Summary								
Extraction Method: EPA Method 8260						EPA Method 8260								
Analytical Method: EPA Method 8260														
Matrix: Soil														
Units: mg/kg														
			Environmental Samples											
		Field ID:		SD2-01				SD3-01				SD3-01RE		
		Batch ID:		H700				H700				H700		
Parameters	MDL		PQL	Result	Validity	Comments	PQL	Result	Validity	Comments	PQL	Result	Validity	Comments
trans-1,3-Dichloropropene	0.0005		0.029	ND	U	g	0.003	ND	UJ	b	0.003	ND	U	g
2-Chloroethyl Vinyl Ether	0.0006		0.035	ND	U	g	0.003	ND	UJ	b	0.003	ND	U	g
Bromoform	0.0013		0.070	ND	U	g	0.007	ND	UJ	b	0.007	ND	U	g
Methyl Isobutyl Ketone	0.0015		0.083	ND	U	g	0.008	ND	UJ	b	0.008	ND	U	g
2-Hexanone	0.0027		0.15	ND	U	g	0.014	ND	UJ	b	0.014	ND	U	g
Tetrachloroethylene (pce)	0.0009		0.050	ND	U	g	0.005	ND	UJ	b	0.005	ND	U	g
1,1,2,2-Tetrachloroethane	0.0009		0.050	ND	U	g	0.0048	ND	UJ	b	0.0048	ND	U	g
Toluene	0.0009		0.050	0.094		g	0.0048	ND	UJ	b	0.0048	ND	U	g
Chlorobenzene	0.0007		0.040	ND	U	g	0.004	ND	UJ	b	0.004	ND	U	g
Ethylbenzene	0.0004		0.024	ND	U	g	0.0023	ND	UJ	b	0.0022	ND	U	g
Styrene	0.0006		0.035	ND	U	g	0.003	ND	UJ	b	0.003	ND	U	g
1,1,2-Trichloro-1,2,2-trifluoroethane	0.0007		0.041	ND	U	g	0.004	ND	UJ	b	0.004	ND	U	g
Xylenes, total	0.0020		0.11	ND	U	g	0.011	ND	UJ	b	0.011	ND	U	g
1,1,1,2-Tetrachloroethane	0.0010		0.055	ND	U	g	0.005	ND	UJ	b	0.005	ND	U	g
1,2,3-Trichloropropane	0.0023		0.12	ND	U	g	0.012	ND	UJ	b	0.012	ND	U	g
Bromochloromethane	0.0007		0.037	ND	U	g	0.004	ND	UJ	b	0.004	ND	U	g
1-Chlorohexane	0.0007		0.036	ND	U	g	0.003	ND	UJ	b	0.003	ND	U	g
Bromobenzene	0.007		0.04	ND	U	g	0.0038	ND	UJ	b	0.0038	ND	U	g

Base: Kotzebue LRRS						Table 2.1.6								
Site: Background Samples						Analytical Data Summary								
Extraction Method: EPA Method 8260						EPA Method 8260								
Analytical Method: EPA Method 8260														
Matrix: Soil														
Units: mg/kg														
			Environmental Samples											
		Field ID:		SS2-01				SS2-01RE				SS3-01		
		Batch ID:		H700				H700				H700		
Parameters	MDL		PQL	Result	Validity	Comments	PQL	Result	Validity	Comments	PQL	Result	Validity	Comments
Chloromethane	0.0009		0.025	ND	UJ	b	0.024	ND	UJ	b	0.005	ND	U	g
Bromomethane	0.0008		0.023	ND	UJ	b	0.022	ND	UJ	b	0.004	ND	U	g
Vinyl Chloride	0.0010		0.027	ND	UJ	b	0.026	ND	UJ	b	0.005	ND	U	g
Chloroethane	0.0010		0.028	ND	UJ	b	0.028	ND	UJ	b	0.005	ND	U	g
Methylene Chloride	0.0009		0.024	0.010	B J	a,b	0.024	0.013	B J	a,b	0.004	0.002	B J	a
Acetone	0.0039		0.11	0.24	J	b	0.11	0.04	J	b	0.02	0.05		g
Carbon Disulfide	0.0005		0.015	ND	UJ	b	0.015	ND	UJ	b	0.003	ND	U	g
1,1-Dichloroethene	0.0012		0.032	ND	UJ	b	0.032	ND	UJ	b	0.006	ND	U	g
1,1-Dichloroethane	0.0004		0.010	ND	UJ	b	0.010	ND	UJ	b	0.002	ND	U	g
trans-1,2-Dichloroethene	0.0009		0.025	ND	UJ	b	0.024	ND	UJ	b	0.005	ND	U	g
cis-1,2-Dichloroethylene	0.0011		0.032	ND	UJ	b	0.031	ND	UJ	b	0.006	ND	U	g
Chloroform	0.0005		0.013	ND	UJ	b	0.013	ND	UJ	b	0.002	ND	U	g
1,2-Dichloroethane	0.0005		0.014	ND	UJ	b	0.014	ND	UJ	b	0.003	ND	U	g
Methyl Ethyl Ketone (2-butanone)	0.0025		0.069	0.061	J	b	0.068	ND	UJ	b	0.013	0.009	J	
1,1,1-Trichloroethane	0.0004		0.012	ND	UJ	b	0.012	ND	UJ	b	0.002	ND	U	g
Carbon Tetrachloride	0.0010		0.027	ND	UJ	b	0.027	ND	UJ	b	0.005	ND	U	g
Vinyl Acetate	0.0016		0.045	ND	UJ	b	0.044	ND	UJ	b	0.008	ND	U	g
Bromodichloromethane	0.0006		0.018	ND	UJ	b	0.018	ND	UJ	b	0.003	ND	U	g
1,2-Dichloropropane	0.0008		0.023	ND	UJ	b	0.023	ND	UJ	b	0.004	ND	U	g
cis-1,3-Dichloropropene	0.0007		0.019	ND	UJ	b	0.019	ND	UJ	b	0.004	ND	U	g
Trichloroethylene (tce)	0.0005		0.015	ND	UJ	b	0.015	ND	UJ	b	0.003	ND	U	g
Dibromochloromethane	0.0003		0.009	ND	UJ	b	0.009	ND	UJ	b	0.002	ND	U	g
1,1,2-Trichloroethane	0.0007		0.019	ND	UJ	b	0.019	ND	UJ	b	0.004	ND	U	g
Benzene	0.0005		0.013	ND	UJ	b	0.013	ND	UJ	b	0.0024	ND	U	g

Base: Kotzebue LRRS						Table 2.1.6								
Site: Background Samples						Analytical Data Summary								
Extraction Method: EPA Method 8260						EPA Method 8260								
Analytical Method: EPA Method 8260														
Matrix: Soil														
Units: mg/kg														
			Environmental Samples											
		Field ID:		SS2-01				SS2-01RE				SS3-01		
		Batch ID:		H700				H700				H700		
Parameters	MDL		PQL	Result	Validity	Comments	PQL	Result	Validity	Comments	PQL	Result	Validity	Comments
trans-1,3-Dichloropropene	0.0005		0.015	ND	UJ	b	0.015	ND	UJ	b	0.003	ND	U	g
2-Chloroethyl Vinyl Ether	0.0006		0.018	ND	UJ	b	0.018	ND	UJ	b	0.003	ND	U	g
Bromoform	0.0013		0.035	ND	UJ	b	0.035	ND	UJ	b	0.007	ND	U	g
Methyl Isobutyl Ketone	0.0015		0.042	ND	UJ	b	0.041	ND	UJ	b	0.008	ND	U	g
2-Hexanone	0.0027		0.077	ND	UJ	b	0.075	ND	UJ	b	0.014	ND	U	g
Tetrachloroethylene (pce)	0.0009		0.025	ND	UJ	b	0.025	ND	UJ	b	0.005	ND	U	g
1,1,2,2-Tetrachloroethane	0.0009		0.025	ND	UJ	b	0.025	ND	UJ	b	0.0047	ND	U	g
Toluene	0.0009		0.025	ND	UJ	b	0.025	ND	UJ	b	0.0047	ND	U	g
Chlorobenzene	0.0007		0.020	ND	UJ	b	0.020	ND	UJ	b	0.004	ND	U	g
Ethylbenzene	0.0004		0.012	ND	UJ	b	0.012	ND	UJ	b	0.0022	ND	U	g
Styrene	0.0006		0.018	ND	UJ	b	0.018	ND	UJ	b	0.003	ND	U	g
1,1,2-Trichloro-1,2,2-trifluoroethane	0.0007		0.021	ND	UJ	b	0.020	ND	UJ	b	0.004	ND	U	g
Xylenes, total	0.0020		0.056	ND	UJ	b	0.055	ND	UJ	b	0.010	ND	U	g
1,1,1,2-Tetrachloroethane	0.0010		0.028	ND	UJ	b	0.027	ND	UJ	b	0.005	ND	U	g
1,2,3-Trichloropropane	0.0023		0.063	ND	UJ	b	0.062	ND	UJ	b	0.012	ND	U	g
Bromochloromethane	0.0007		0.019	ND	UJ	b	0.018	ND	UJ	b	0.003	ND	U	g
1-Chlorohexane	0.0007		0.018	ND	UJ	b	0.018	ND	UJ	b	0.003	ND	U	g
Bromobenzene	0.007		0.020	ND	UJ	b	0.020	ND	UJ	b	0.0038	ND	U	g

Base: Kotzebue LRRS
Site: Background Samples
Extraction Method: EPA Method 8260
Analytical Method: EPA Method 8260
Matrix: Soil
Units: mg/kg

Table 2.1.6
Analytical Data Summary
EPA Method 8260

			Environmental Samples											
		Field ID:		SD4-01				SS1A-01				SS1B-01		
		Batch ID:		H718				H718				H718		
Parameters	MDL		PQL	Result	Validity	Comments	PQL	Result	Validity	Comments	PQL	Result	Validity	Comments
Chloromethane	0.0009		0.004	ND	UJ	d	0.007	ND	UJ	d	0.003	ND	UJ	d
Bromomethane	0.0008		0.004	ND	UJ	d	0.007	ND	UJ	d	0.003	ND	UJ	d
Vinyl Chloride	0.0010		0.005	ND	UJ	d	0.008	ND	UJ	d	0.003	ND	UJ	d
Chloroethane	0.0010		0.005	ND	UJ	d	0.008	ND	UJ	d	0.003	ND	UJ	d
Methylene Chloride	0.0009		0.004	0.002	B J	a	0.007	0.003	B J	a	0.003	0.001	B J	a
Acetone	0.0039		0.02	0.07	J	d	0.03	ND	UJ	d	0.01	ND	UJ	d
Carbon Disulfide	0.0005		0.003	ND	UJ	d	0.004	ND	UJ	d	0.002	ND	UJ	d
1,1-Dichloroethene	0.0012		0.006	ND	UJ	d	0.010	ND	UJ	d	0.004	ND	UJ	d
1,1-Dichloroethane	0.0004		0.002	ND	UJ	d	0.003	ND	UJ	d	0.001	ND	UJ	d
trans-1,2-Dichloroethene	0.0009		0.004	ND	UJ	d	0.007	ND	UJ	d	0.003	ND	UJ	d
cis-1,2-Dichloroethylene	0.0011		0.006	ND	UJ	d	0.009	ND	UJ	d	0.004	ND	UJ	d
Chloroform	0.0005		0.002	ND	UJ	d	0.004	ND	UJ	d	0.001	ND	UJ	d
1,2-Dichloroethane	0.0005		0.002	ND	UJ	d	0.004	ND	UJ	d	0.002	ND	UJ	d
Methyl Ethyl Ketone (2-butanone)	0.0025		0.012	0.027	J	d	0.020	ND	UJ	d	0.008	ND	UJ	d
1,1,1-Trichloroethane	0.0004		0.002	ND	UJ	d	0.004	ND	UJ	d	0.001	ND	UJ	d
Carbon Tetrachloride	0.0010		0.005	ND	UJ	d	0.008	ND	UJ	d	0.003	ND	UJ	d
Vinyl Acetate	0.0016		0.008	ND	UJ	d	0.013	ND	UJ	d	0.005	ND	UJ	d
Bromodichloromethane	0.0006		0.003	ND	UJ	d	0.005	ND	UJ	d	0.002	ND	UJ	d
1,2-Dichloropropane	0.0008		0.004	ND	UJ	d	0.007	ND	UJ	d	0.003	ND	UJ	d
cis-1,3-Dichloropropene	0.0007		0.003	ND	UJ	d	0.006	ND	UJ	d	0.002	ND	UJ	d
Trichloroethylene (tce)	0.0005		0.003	ND	UJ	d	0.004	ND	UJ	d	0.002	ND	UJ	d
Dibromochloromethane	0.0003		0.002	ND	UJ	d	0.003	ND	UJ	d	0.001	ND	UJ	d
1,1,2-Trichloroethane	0.0007		0.003	ND	UJ	d	0.006	ND	UJ	d	0.002	ND	UJ	d
Benzene	0.0005		0.0023	ND	UJ	d	0.0039	ND	UJ	d	0.0015	ND	UJ	d

Base: Kotzebue LRRS						Table 2.1.6								
Site: Background Samples						Analytical Data Summary								
Extraction Method: EPA Method 8260						EPA Method 8260								
Analytical Method: EPA Method 8260														
Matrix: Soil														
Units: mg/kg														
			Environmental Samples											
		Field ID:		SD4-01				SS1A-01				SS1B-01		
		Batch ID:		H718				H718				H718		
Parameters	MDL		PQL	Result	Validity	Comments	PQL	Result	Validity	Comments	PQL	Result	Validity	Comments
trans-1,3-Dichloropropene	0.0005		0.003	ND	UJ	d	0.004	ND	UJ	d	0.002	ND	UJ	d
2-Chloroethyl Vinyl Ether	0.0006		0.003	ND	UJ	d	0.005	ND	UJ	d	0.002	ND	UJ	d
Bromoform	0.0013		0.006	ND	UJ	d	0.010	ND	UJ	d	0.004	ND	UJ	d
Methyl Isobutyl Ketone	0.0015		0.007	ND	UJ	d	0.012	ND	UJ	d	0.005	ND	UJ	d
2-Hexanone	0.0027		0.013	ND	UJ	d	0.023	ND	UJ	d	0.009	ND	UJ	d
Tetrachloroethylene (pce)	0.0009		0.004	ND	UJ	d	0.007	ND	UJ	d	0.003	ND	UJ	d
1,1,2,2-Tetrachloroethane	0.0009		0.0044	ND	UJ	d	0.0075	ND	UJ	d	0.0029	ND	UJ	d
Toluene	0.0009		0.0044	ND	UJ	d	0.0075	ND	UJ	d	0.0029	ND	UJ	d
Chlorobenzene	0.0007		0.003	ND	UJ	d	0.006	ND	UJ	d	0.002	ND	UJ	d
Ethylbenzene	0.0004		0.0021	ND	UJ	d	0.0036	ND	UJ	d	0.0014	ND	UJ	d
Styrene	0.0006		0.003	ND	UJ	d	0.005	ND	UJ	d	0.002	ND	UJ	d
1,1,2-Trichloro-1,2,2-trifluoroethane	0.0007		0.004	ND	UJ	d	0.006	ND	UJ	d	0.002	ND	UJ	d
Xylenes, total	0.0020		0.010	ND	UJ	d	0.017	ND	UJ	d	0.006	0.003	J	d
1,1,1,2-Tetrachloroethane	0.0010		0.005	ND	UJ	d	0.008	ND	UJ	d	0.003	ND	UJ	d
1,2,3-Trichloropropane	0.0023		0.011	ND	UJ	d	0.019	ND	UJ	d	0.007	ND	UJ	d
Bromochloromethane	0.0007		0.003	ND	UJ	d	0.006	ND	UJ	d	0.002	ND	UJ	d
1-Chlorohexane	0.0007		0.003	ND	UJ	d	0.005	ND	UJ	d	0.002	ND	UJ	d
Bromobenzene	0.007		0.0035	ND	UJ	d	0.0060	ND	UJ	d	0.0023	ND	UJ	d

Base: Kotzebue LRRS						Table 2.1.6								
Site: Background Samples						Analytical Data Summary								
Extraction Method: EPA Method 8260						EPA Method 8260								
Analytical Method: EPA Method 8260														
Matrix: Soil														
Units: mg/kg														
			Environmental Samples											
		Field ID:		SS1C-01				SS4-01				SS4-01RE		
		Batch ID:		H718				H718				H718		
Parameters	MDL		PQL	Result	Validity	Comments	PQL	Result	Validity	Comments	PQL	Result	Validity	Comments
Chloromethane	0.0009		0.003	ND	UJ	d	0.004	ND	UJ	d	0.004	ND	UJ	e
Bromomethane	0.0008		0.003	ND	UJ	d	0.004	ND	UJ	d	0.004	ND	UJ	e
Vinyl Chloride	0.0010		0.003	ND	UJ	d	0.004	ND	UJ	d	0.004	ND	UJ	e
Chloroethane	0.0010		0.003	ND	UJ	d	0.005	ND	UJ	d	0.005	ND	UJ	e
Methylene Chloride	0.0009		0.003	0.002	B J	a,d	0.004	0.003	B J	a,d	0.004	0.006	B J	a,e
Acetone	0.0039		0.01	ND	UJ	d	0.02	0.05	J	d	0.02	0.14	J	e
Carbon Disulfide	0.0005		0.002	ND	UJ	d	0.003	ND	UJ	d	0.002	ND	UJ	e
1,1-Dichloroethene	0.0012		0.004	ND	UJ	d	0.005	ND	UJ	d	0.005	ND	UJ	e
1,1-Dichloroethane	0.0004		0.001	ND	UJ	d	0.002	ND	UJ	d	0.002	ND	UJ	e
trans-1,2-Dichloroethene	0.0009		0.003	ND	UJ	d	0.004	ND	UJ	d	0.004	ND	UJ	e
cis-1,2-Dichloroethylene	0.0011		0.004	ND	UJ	d	0.005	ND	UJ	d	0.005	ND	UJ	e
Chloroform	0.0005		0.002	ND	UJ	d	0.002	ND	UJ	d	0.002	ND	UJ	e
1,2-Dichloroethane	0.0005		0.002	ND	UJ	d	0.002	ND	UJ	d	0.002	ND	UJ	e
Methyl Ethyl Ketone (2-butanone)	0.0025		0.008	ND	UJ	d	0.012	0.023	J	d	0.011	0.037	J	e
1,1,1-Trichloroethane	0.0004		0.001	ND	UJ	d	0.002	ND	UJ	d	0.002	ND	UJ	e
Carbon Tetrachloride	0.0010		0.003	ND	UJ	d	0.005	ND	UJ	d	0.004	ND	UJ	e
Vinyl Acetate	0.0016		0.005	ND	UJ	d	0.008	ND	UJ	d	0.007	ND	UJ	e
Bromodichloromethane	0.0006		0.002	ND	UJ	d	0.003	ND	UJ	d	0.003	ND	UJ	e
1,2-Dichloropropane	0.0008		0.003	ND	UJ	d	0.004	ND	UJ	d	0.004	ND	UJ	e
cis-1,3-Dichloropropene	0.0007		0.002	ND	UJ	d	0.003	ND	UJ	d	0.003	ND	UJ	e
Trichloroethylene (tce)	0.0005		0.002	ND	UJ	d	0.003	ND	UJ	d	0.002	ND	UJ	e
Dibromochloromethane	0.0003		0.001	ND	UJ	d	0.002	ND	UJ	d	0.002	ND	UJ	e
1,1,2-Trichloroethane	0.0007		0.002	ND	UJ	d	0.003	ND	UJ	d	0.003	ND	UJ	e
Benzene	0.0005		0.0016	ND	UJ	d	0.0022	ND	UJ	d	0.0021	ND	UJ	e

Base: Kotzebue LRRS						Table 2.1.6								
Site: Background Samples						Analytical Data Summary								
Extraction Method: EPA Method 8260						EPA Method 8260								
Analytical Method: EPA Method 8260														
Matrix: Soil														
Units: mg/kg														
			Environmental Samples											
		Field ID:		SS1C-01				SS4-01				SS4-01RE		
		Batch ID:		H718				H718				H718		
Parameters	MDL		PQL	Result	Validity	Comments	PQL	Result	Validity	Comments	PQL	Result	Validity	Comments
trans-1,3-Dichloropropene	0.0005		0.002	ND	UJ	d	0.002	ND	UJ	d	0.002	ND	UJ	e
2-Chloroethyl Vinyl Ether	0.0006		0.002	ND	UJ	d	0.003	ND	UJ	d	0.003	ND	UJ	e
Bromoform	0.0013		0.004	ND	UJ	d	0.006	ND	UJ	d	0.006	ND	UJ	e
Methyl Isobutyl Ketone	0.0015		0.005	ND	UJ	d	0.007	ND	UJ	d	0.007	ND	UJ	e
2-Hexanone	0.0027		0.009	ND	UJ	d	0.013	ND	UJ	d	0.012	ND	UJ	e
Tetrachloroethylene (pce)	0.0009		0.003	ND	UJ	d	0.004	ND	UJ	d	0.004	ND	UJ	e
1,1,2,2-Tetrachloroethane	0.0009		0.0031	ND	UJ	d	0.0043	ND	UJ	d,n	0.0041	ND	UJ	e
Toluene	0.0009		0.0031	ND	UJ	d	0.0043	ND	UJ	d	0.0041	0.0043	J	e
Chlorobenzene	0.0007		0.002	ND	UJ	d	0.003	ND	UJ	d	0.003	ND	UJ	e
Ethylbenzene	0.0004		0.0015	ND	UJ	d	0.0020	ND	UJ	d	0.0019	0.002	J	e
Styrene	0.0006		0.002	ND	UJ	d	0.003	ND	UJ	d	0.003	ND	UJ	e
1,1,2-Trichloro-1,2,2-trifluoroethane	0.0007		0.003	ND	UJ	d	0.003	ND	UJ	d	0.003	ND	UJ	e
Xylenes, total	0.0020		0.007	ND	UJ	d	0.009	ND	UJ	d	0.009	0.014	J	e
1,1,1,2-Tetrachloroethane	0.0010		0.003	ND	UJ	d	0.005	ND	UJ	d	0.005	ND	UJ	e
1,2,3-Trichloropropane	0.0023		0.008	ND	UJ	d	0.011	ND	UJ	d,n	0.010	ND	UJ	e
Bromochloromethane	0.0007		0.002	ND	UJ	d	0.003	ND	UJ	d	0.003	ND	UJ	e
1-Chlorohexane	0.0007		0.002	ND	UJ	d	0.003	ND	UJ	d	0.003	ND	UJ	e
Bromobenzene	0.007		0.0025	ND	UJ	d	0.0034	ND	UJ	d,n	0.0033	ND	UJ	e

Base: Kotzebue LRRS						Table 20.2.1.7								
Site: Background Samples						Analytical Data Summary								
Extraction Method: EPA Method 3550						EPA Method 8270								
Analytical Method: EPA Method 8270														
Matrix: Soil														
Units: mg/kg														
			Environmental Samples											
		Field ID:		SB1-11.0										
		Batch ID:		H599										
Parameters	MDL		PQL	Result	Validity	Comments								
Phenol	0.05		0.2	ND	U	g								
bis(2-Chloroethyl) Ether	0.04		0.1	ND	U	g								
2-Chlorophenol	0.07		0.3	ND	U	g								
1,3-Dichlorobenzene	0.04		0.1	ND	U	g								
1,4-Dichlorobenzene	0.03		0.1	ND	U	g								
Benzyl Alcohol	0.05		0.2	ND	U	g								
1,2-Dichlorobenzene	0.04		0.1	ND	U	g								
2-Methylphenol	0.10		0.4	ND	U	g								
2,2'-Oxybis (1-Chloropropane)	0.03		0.1	ND	U	g								
4-Methylphenol	0.08		0.3	ND	U	g								
N-Nitrosodi-n-propylamine	0.03		0.1	ND	U	g								
Hexachloroethane	0.04		0.1	ND	U	g								
Nitrobenzene	0.02		0.1	ND	U	g								
Isophorone	0.03		0.1	ND	U	g								
2-Nitrophenol	0.03		0.1	ND	U	g								
2,4-Dimethylphenol	0.17		0.3	ND	U	g								
Benzoic Acid	0.06		0.20	ND	U	g								
bis(2-Chloroethoxy) Methane	0.04		0.1	ND	U	g								
2,4-Dichlorophenol	0.04		0.2	ND	U	g								
1,2,4-Trichlorobenzene	0.03		0.1	ND	U	g								
Naphthalene	0.04		0.1	ND	U	g								
4-Chloroaniline	0.10		0.4	ND	U	g								
Hexachlorobutadiene	0.03		0.1	ND	U	g								
4-Chloro-3-Methylphenol	0.06		0.2	ND	U	g								
2-Methylnaphthalene	0.03		0.1	ND	U	g								
Hexachlorocyclopentadiene	0.03		0.1	ND	U	g								
2,4,6-Trichlorophenol	0.04		0.2	ND	U	g								
2,4,5-Trichlorophenol	0.03		0.09	ND	U	g								
2-Chloronaphthalene	0.03		0.1	ND	U	g								
2-Nitroaniline	0.02		0.07	ND	U	g								
Dimethyl Phthalate	0.04		0.1	ND	U	g								
Acenaphthylene	0.04		0.1	ND	U	g								
3-Nitroaniline	0.11		0.40	ND	U	g								
Acenaphthene	0.03		0.1	ND	U	g								
2,4-Dinitrophenol	0.09		0.32	ND	U	g								
4-Nitrophenol	0.07		0.24	ND	U	g								
Dibenzofuran	0.03		0.1	ND	U	g								
2,6-Dinitrotoluene	0.04		0.2	ND	U	g								

Base: Kotzebue LRRS						Table 20.2.1.7								
Site: Background Samples						Analytical Data Summary								
Extraction Method: EPA Method 3550						EPA Method 8270								
Analytical Method: EPA Method 8270														
Matrix: Soil														
Units: mg/kg														
			Environmental Samples											
		Field ID:		SB1-11.0										
		Batch ID:		H599										
Parameters	MDL		PQL	Result	Validity	Comments								
2,4-Dinitrotoluene	0.02		0.1	ND	U	g								
Diethyl Phthalate	0.04		0.1	ND	U	g								
4-Chlorophenyl Phenyl Ether	0.02		0.1	ND	U	g								
Fluorene	0.03		0.1	ND	U	g								
4-Nitroaniline	0.13		0.48	ND	U	g								
4,6-Dinitro-2-Methylphenol	0.09		0.32	ND	U	g								
N-Nitrosodiphenylamine	0.09		0.3	ND	U	g								
4-Bromophenyl Phenyl Ether	0.02		0.1	ND	U	g								
Hexachlorobenzene	0.03		0.1	ND	U	g								
Pentachlorophenol	0.03		0.12	ND	U	g								
Phenanthrene	0.03		0.1	ND	U	g								
Anthracene	0.04		0.2	ND	U	g								
di-n-butyl Phthalate	0.06		0.2	ND	U	g								
Fluroanthene	0.03		0.1	ND	U	g								
Pyrene	0.03		0.1	ND	U	g								
Butylbenzylphthalate	0.02		0.1	ND	U	g								
3,3'-Dichlorobenzidine	0.06		0.2	ND	U	g								
Benzo(a)anthracene	0.04		0.1	ND	U	g								
bis(2-Ethylhexyl) Phthalate	0.04		0.1	ND	U	g								
Chrysene	0.05		0.2	ND	U	g								
di-n-Octylphthalate	0.02		0.1	ND	U	g								
Benzo(b)fluoranthene	0.04		0.2	ND	U	g								
Benzo(k)fluoranthene	0.07		0.3	ND	U	g								
Benzo(a)pyrene	0.04		0.1	ND	U	g								
Indeno(1,2,3-c,d)pyrene	0.03		0.1	ND	U	g								
Dibenzo(a,h)anthracene	0.02		0.1	ND	U	g								
Benzo(g,h,i)perylene	0.03		0.1	ND	U	g								

Base: Kotzebue LRRS						Table 20.2.1.7							
Site: Background Samples						Analytical Data Summary							
Extraction Method: EPA Method 3550						EPA Method 8270							
Analytical Method: EPA Method 8270													
Matrix: Soil													
Units: mg/kg													
			Environmental Samples										
		Field ID:		SD2-01				SD3-01					
		Batch ID:		H700				H700					
Parameters	MDL		PQL	Result	Validity	Comments	PQL	Result	Validity	Comments			
Phenol	0.05		2.2	ND	U	g	0.3	ND	U	g			
bis(2-Chloroethyl) Ether	0.04		1.6	ND	U	g	0.2	ND	U	g			
2-Chlorophenol	0.07		2.9	ND	U	g	0.3	ND	U	g			
1,3-Dichlorobenzene	0.04		1.6	ND	U	g	0.2	ND	U	g			
1,4-Dichlorobenzene	0.03		1.0	ND	U	g	0.1	ND	U	g			
Benzyl Alcohol	0.05		2.1	ND	U	g	0.2	ND	U	g			
1,2-Dichlorobenzene	0.04		1.5	ND	U	g	0.2	ND	U	g			
2-Methylphenol	0.10		4.0	ND	U	g	0.5	ND	U	g			
2,2'-Oxybis (1-Chloropropane)	0.03		1.3	ND	U	g	0.2	ND	U	g			
4-Methylphenol	0.08		3.1	ND	U	g	0.4	ND	U	g			
N-Nitrosodi-n-propylamine	0.03		1.1	ND	U	g	0.1	ND	U	g			
Hexachloroethane	0.04		1.6	ND	U	g	0.2	ND	U	g			
Nitrobenzene	0.02		1.0	ND	U	g	0.1	ND	U	g			
Isophorone	0.03		1.3	ND	U	g	0.2	ND	U	g			
2-Nitrophenol	0.03		1.4	ND	U	g	0.2	ND	U	g			
2,4-Dimethylphenol	0.17		3.8	ND	U	g	0.5	ND	U	g			
Benzoic Acid	0.06		2.3	0.93	J		0.27	ND	U	g			
bis(2-Chloroethoxy) Methane	0.04		1.5	ND	U	g	0.2	ND	U	g			
2,4-Dichlorophenol	0.04		1.8	ND	U	g	0.2	ND	U	g			
1,2,4-Trichlorobenzene	0.03		1.4	ND	U	g	0.2	ND	U	g			
Naphthalene	0.04		1.4	ND	U	g	0.2	ND	U	g			
4-Chloroaniline	0.10		4.2	ND	U	g	0.5	ND	U	g			
Hexachlorobutadiene	0.03		1.4	ND	U	g	0.2	ND	U	g			
4-Chloro-3-Methylphenol	0.06		2.4	ND	U	g	0.3	ND	U	g			
2-Methylnaphthalene	0.03		1.4	ND	U	g	0.2	ND	U	g			
Hexachlorocyclopentadiene	0.03		1.0	ND	U	g	0.1	ND	U	g			
2,4,6-Trichlorophenol	0.04		1.7	ND	U	g	0.2	ND	U	g			
2,4,5-Trichlorophenol	0.03		1.0	ND	U	g	0.12	ND	U	g			
2-Chloronaphthalene	0.03		1.4	ND	U	g	0.2	ND	U	g			
2-Nitroaniline	0.02		0.78	ND	U	g	0.09	ND	U	g			
Dimethyl Phthalate	0.04		1.4	ND	U	g	0.2	ND	U	g			
Acenaphthylene	0.04		1.7	ND	U	g	0.2	ND	U	g			
3-Nitroaniline	0.11		4.5	ND	U	g	0.54	ND	U	g			
Acenaphthene	0.03		1.2	ND	U	g	0.1	ND	U	g			
2,4-Dinitrophenol	0.09		3.6	ND	U	g	0.43	ND	U	g			
4-Nitrophenol	0.07		2.7	ND	U	g	0.32	ND	U	g			
Dibenzofuran	0.03		1.3	ND	U	g	0.2	ND	U	g			
2,6-Dinitrotoluene	0.04		1.7	ND	U	g	0.2	ND	U	g			

Base: Kotzebue LRRS				Table 20.2.1.7									
Site: Background Samples				Analytical Data Summary									
Extraction Method: EPA Method 3550				EPA Method 8270									
Analytical Method: EPA Method 8270													
Matrix: Soil													
Units: mg/kg													
			Environmental Samples										
		Field ID:		SD2-01				SD3-01					
		Batch ID:		H700				H700					
Parameters	MDL		PQL	Result	Validity	Comments	PQL	Result	Validity	Comments			
2,4-Dinitrotoluene	0.02		0.9	ND	U	g	0.1	ND	U	g			
Diethyl Phthalate	0.04		1.4	ND	U	g	0.2	ND	U	g			
4-Chlorophenyl Phenyl Ether	0.02		0.9	ND	U	g	0.1	ND	U	g			
Fluorene	0.03		1.2	ND	U	g	0.1	ND	U	g			
4-Nitroaniline	0.13		5.4	ND	U	g	0.64	ND	U	g			
4,6-Dinitro-2-Methylphenol	0.09		3.6	ND	U	g	0.43	ND	U	g			
N-Nitrosodiphenylamine	0.09		3.4	ND	U	g	0.4	ND	U	g			
4-Bromophenyl Phenyl Ether	0.02		0.9	ND	U	g	0.1	ND	U	g			
Hexachlorobenzene	0.03		1.3	ND	U	g	0.2	ND	U	g			
Pentachlorophenol	0.03		1.3	ND	U	g	0.16	ND	U	g			
Phenanthrene	0.03		1.3	ND	U	g	0.2	ND	U	g			
Anthracene	0.04		1.8	ND	U	g	0.2	ND	U	g			
di-n-butyl Phthalate	0.06		2.6	ND	U	g	0.3	ND	U	g			
Fluroanthene	0.03		1.4	ND	U	g	0.2	ND	U	g			
Pyrene	0.03		1.2	ND	U	g	0.1	ND	U	g			
Butylbenzylphthalate	0.02		0.9	ND	U	g	0.1	ND	U	g			
3,3'-Dichlorobenzidine	0.06		2.4	ND	U	g	0.3	ND	U	g			
Benzo(a)anthracene	0.04		1.6	ND	U	g	0.2	ND	U	g			
bis(2-Ethylhexyl) Phthalate	0.04		1.6	ND	U	g	0.2	ND	U	g			
Chrysene	0.05		1.8	ND	U	g	0.2	ND	U	g			
di-n-Octylphthalate	0.02		2.8	ND	U	g	0.1	ND	U	g			
Benzo(b)fluoranthene	0.04		1.8	ND	U	g	0.2	ND	U	g			
Benzo(k)fluoranthene	0.07		3.1	ND	U	g	0.4	ND	U	g			
Benzo(a)pyrene	0.04		1.6	ND	U	g	0.2	ND	U	g			
Indeno(1,2,3-c,d)pyrene	0.03		1.1	ND	U	g	0.1	ND	U	g			
Dibenzo(a,h)anthracene	0.02		0.9	ND	U	g	0.1	ND	U	g			
Benzo(g,h,i)perylene	0.03		1.3	ND	U	g	0.2	ND	U	g			

Base: Kotzebue LRRS
Site: Background Samples
Extraction Method: EPA Method 3550
Analytical Method: EPA Method 8270
Matrix: Soil
Units: mg/kg

Table 20.2.1.7
Analytical Data Summary
EPA Method 8270

Environmental Samples

Parameters	MDL	Field ID:	SS2-01				SS2-01RE				SS3-01			
		Batch ID:	H700				H700				H700			
			PQL	Result	Validity	Comments	PQL	Result	Validity	Comments	PQL	Result	Validity	Comments
Phenol	0.05		0.8	ND	UJ	b	1.6	ND	UJ	b,e	0.3	ND	U	g
bis(2-Chloroethyl) Ether	0.04		0.6	ND	UJ	b	1.2	ND	UJ	b,e	0.2	ND	U	g
2-Chlorophenol	0.07		1.1	ND	UJ	b	2.1	ND	UJ	b,e	0.4	ND	U	g
1,3-Dichlorobenzene	0.04		0.6	ND	UJ	b	1.1	ND	UJ	b,e	0.2	ND	U	g
1,4-Dichlorobenzene	0.03		0.4	ND	UJ	b	0.7	ND	UJ	b,e	0.1	ND	U	g
Benzyl Alcohol	0.05		0.8	ND	UJ	b	1.5	ND	UJ	b,e	0.3	ND	U	g
1,2-Dichlorobenzene	0.04		0.6	ND	UJ	b	1.1	ND	UJ	b,e	0.2	ND	U	g
2-Methylphenol	0.10		1.5	ND	UJ	b	2.9	ND	UJ	b,e	0.5	ND	U	g
2,2'-Oxybis (1-Chloropropane)	0.03		0.5	ND	UJ	b	1.0	ND	UJ	b,e	0.2	ND	U	g
4-Methylphenol	0.08		1.2	ND	UJ	b	2.3	ND	UJ	b,e	0.4	ND	U	g
N-Nitrosodi-n-propylamine	0.03		0.4	ND	UJ	b	0.8	ND	UJ	b,e	0.1	ND	U	g
Hexachloroethane	0.04		0.6	ND	UJ	b	1.2	ND	UJ	b,e	0.2	ND	U	g
Nitrobenzene	0.02		0.4	ND	UJ	b	0.7	ND	UJ	b,e	0.1	ND	U	g
Isophorone	0.03		0.5	ND	UJ	b	1.0	ND	UJ	b,e	0.2	ND	U	g
2-Nitrophenol	0.03		0.5	ND	UJ	b	1.0	ND	UJ	b,e	0.2	ND	U	g
2,4-Dimethylphenol	0.17		1.4	ND	UJ	b	2.8	ND	UJ	b,e	0.5	ND	U	g
Benzoic Acid	0.06		0.87	1.0		b	1.7	ND	UJ	b,e	0.29	ND	U	g
bis(2-Chloroethoxy) Methane	0.04		0.5	ND	UJ	b	1.1	ND	UJ	b,e	0.2	ND	U	g
2,4-Dichlorophenol	0.04		0.7	ND	UJ	b	1.3	ND	UJ	b,e	0.2	ND	U	g
1,2,4-Trichlorobenzene	0.03		0.5	ND	UJ	b	1.0	ND	UJ	b,e	0.2	ND	U	g
Naphthalene	0.04		0.5	ND	UJ	b	1.0	ND	UJ	b,e	0.2	ND	U	g
4-Chloroaniline	0.10		1.6	ND	UJ	b	3.0	ND	UJ	b,e	0.5	ND	U	g
Hexachlorobutadiene	0.03		0.5	ND	UJ	b	1.0	ND	UJ	b,e	0.2	ND	U	g
4-Chloro-3-Methylphenol	0.06		0.9	ND	UJ	b	1.7	ND	UJ	b,e	0.3	ND	U	g
2-Methylnaphthalene	0.03		0.5	ND	UJ	b	1.0	ND	UJ	b,e	0.2	ND	U	g
Hexachlorocyclopentadiene	0.03		0.4	ND	UJ	b	0.7	ND	UJ	b,e	0.1	ND	U	g
2,4,6-Trichlorophenol	0.04		0.7	ND	UJ	b	1.3	ND	UJ	b,e	0.2	ND	U	g
2,4,5-Trichlorophenol	0.03		0.39	ND	UJ	b	0.74	ND	UJ	b,e	0.13	ND	U	g
2-Chloronaphthalene	0.03		0.5	ND	UJ	b	1.0	ND	UJ	b,e	0.2	ND	U	g
2-Nitroaniline	0.02		0.29	ND	UJ	b	0.56	ND	UJ	b,e	0.10	ND	U	g
Dimethyl Phthalate	0.04		0.5	ND	UJ	b	1.0	ND	UJ	b,e	0.2	ND	U	g
Acenaphthylene	0.04		0.6	ND	UJ	b	1.2	ND	UJ	b,e	0.2	ND	U	g
3-Nitroaniline	0.11		1.7	ND	UJ	b	3.3	ND	UJ	b,e	0.57	ND	U	g
Acenaphthene	0.03		0.5	ND	UJ	b	0.9	ND	UJ	b,e	0.2	ND	U	g
2,4-Dinitrophenol	0.09		1.4	ND	UJ	b	2.6	ND	UJ	b,e	0.46	ND	U	g
4-Nitrophenol	0.07		1.0	ND	UJ	b	2.0	ND	UJ	b,e	0.34	ND	U	g
Dibenzofuran	0.03		0.5	ND	UJ	b	0.9	ND	UJ	b,e	0.2	ND	U	g
2,6-Dinitrotoluene	0.04		0.7	ND	UJ	b	1.3	ND	UJ	b,e	0.2	ND	U	g

Base: Kotzebue LRRS						Table 20.2.1.7								
Site: Background Samples						Analytical Data Summary								
Extraction Method: EPA Method 3550						EPA Method 8270								
Analytical Method: EPA Method 8270														
Matrix: Soil														
Units: mg/kg														
			Environmental Samples											
		Field ID:		SS2-01				SS2-01RE				SS3-01		
		Batch ID:		H700				H700				H700		
Parameters	MDL		PQL	Result	Validity	Comments	PQL	Result	Validity	Comments	PQL	Result	Validity	Comments
2,4-Dinitrotoluene	0.02		0.3	ND	UJ	b	0.7	ND	UJ	b,e	0.1	ND	U	g
Diethyl Phthalate	0.04		0.5	ND	UJ	b	1.0	ND	UJ	b,e	0.2	ND	U	g
4-Chlorophenyl Phenyl Ether	0.02		0.3	ND	UJ	b	0.6	ND	UJ	b,e	0.1	ND	U	g
Fluorene	0.03		0.5	ND	UJ	b	0.9	ND	UJ	b,e	0.2	ND	U	g
4-Nitroaniline	0.13		2.0	ND	UJ	b	3.9	ND	UJ	b,e	0.68	ND	U	g
4,6-Dinitro-2-Methylphenol	0.09		1.4	ND	UJ	b	2.6	ND	UJ	b,e	0.46	ND	U	g
N-Nitrosodiphenylamine	0.09		1.3	ND	UJ	b	2.5	ND	UJ	b,e	0.4	ND	U	g
4-Bromophenyl Phenyl Ether	0.02		0.3	ND	UJ	b	0.6	ND	UJ	b,e	0.1	ND	U	g
Hexachlorobenzene	0.03		0.5	ND	UJ	b	1.0	ND	UJ	b,e	0.2	ND	U	g
Pentachlorophenol	0.03		0.51	ND	UJ	b	0.97	ND	UJ	b,e	0.17	ND	U	g
Phenanthrene	0.03		0.5	ND	UJ	b	1.0	ND	UJ	b,e	0.2	ND	U	g
Anthracene	0.04		0.7	ND	UJ	b	1.3	ND	UJ	b,e	0.2	ND	U	g
di-n-butyl Phthalate	0.06		1.0	ND	UJ	b	1.8	ND	UJ	b,e	0.3	ND	U	g
Fluroanthene	0.03		0.5	ND	UJ	b	1.0	ND	UJ	b,e	0.2	ND	U	g
Pyrene	0.03		0.4	ND	UJ	b	0.8	ND	UJ	b,e	0.1	ND	U	g
Butylbenzylphthalate	0.02		0.3	ND	UJ	b	0.7	ND	UJ	b,e	0.1	ND	U	g
3,3'-Dichlorobenzidine	0.06		0.9	ND	UJ	b	1.7	ND	UJ	b,e	0.3	ND	U	g
Benzo(a)anthracene	0.04		0.6	ND	UJ	b	1.1	ND	UJ	b,e	0.2	ND	U	g
bis(2-Ethylhexyl) Phthalate	0.04		0.6	ND	UJ	b	1.2	ND	UJ	b,e	0.2	ND	U	g
Chrysene	0.05		0.7	ND	UJ	b	1.3	ND	UJ	b,e	0.2	ND	U	g
di-n-Octylphthalate	0.02		0.4	ND	UJ	b	0.7	ND	UJ	b,e	0.1	ND	U	g
Benzo(b)fluoranthene	0.04		0.7	ND	UJ	b	1.3	ND	UJ	b,e	0.2	ND	U	g
Benzo(k)fluoranthene	0.07		1.2	ND	UJ	b	2.2	ND	UJ	b,e	0.4	ND	U	g
Benzo(a)pyrene	0.04		0.6	ND	UJ	b	1.2	ND	UJ	b,e	0.2	ND	U	g
Indeno(1,2,3-c,d)pyrene	0.03		0.4	ND	UJ	b	0.8	ND	UJ	b,e	0.1	ND	U	g
Dibenzo(a,h)anthracene	0.02		0.3	ND	UJ	b	0.7	ND	UJ	b,e	0.1	ND	U	g
Benzo(g,h,i)perylene	0.03		0.5	ND	UJ	b	0.9	ND	UJ	b,e	0.2	ND	U	g

Base: Kotzebue LRRS
Site: Background Samples
Extraction Method: EPA Method 3550
Analytical Method: EPA Method 8270
Matrix: Soil
Units: mg/kg

Table 20.2.1.7
Analytical Data Summary
EPA Method 8270

			Environmental Samples											
		Field ID:		SD4-01				SS1A-01				SS1B-01		
		Batch ID:		H718				H718				H718		
Parameters	MDL		PQL	Result	Validity	Comments	PQL	Result	Validity	Comments	PQL	Result	Validity	Comments
Phenol	0.05		0.3	ND	U	g	0.4	ND	U	g	0.2	ND	U	g
bis(2-Chloroethyl) Ether	0.04		0.2	ND	U	g	0.3	ND	U	g	0.1	ND	U	g
2-Chlorophenol	0.07		0.3	ND	U	g	0.5	ND	U	g	0.3	ND	U	g
1,3-Dichlorobenzene	0.04		0.2	ND	U	k	0.3	ND	U	k	0.1	ND	U	k
1,4-Dichlorobenzene	0.03		0.1	ND	U	g	0.2	ND	U	g	0.1	ND	U	g
Benzyl Alcohol	0.05		0.2	ND	U	g	0.4	ND	U	g	0.2	0.1	J	
1,2-Dichlorobenzene	0.04		0.2	ND	U	g	0.3	ND	U	g	0.1	ND	U	g
2-Methylphenol	0.10		0.5	ND	U	g	0.7	ND	U	g	0.3	ND	U	g
2,2'-Oxybis (1-Chloropropane)	0.03		0.2	ND	U	g	0.2	ND	U	g	0.1	ND	U	g
4-Methylphenol	0.08		0.4	ND	U	g	0.5	ND	U	g	0.3	ND	U	g
N-Nitrosodi-n-propylamine	0.03		0.1	ND	U	g	0.2	ND	U	g	0.1	ND	U	g
Hexachloroethane	0.04		0.2	ND	U	g	0.3	ND	U	g	0.1	ND	U	g
Nitrobenzene	0.02		0.1	ND	U	g	0.2	ND	U	g	0.1	ND	U	g
Isophorone	0.03		0.2	ND	U	g	0.2	ND	U	g	0.1	ND	U	g
2-Nitrophenol	0.03		0.2	ND	U	g	0.2	ND	U	g	0.1	ND	U	g
2,4-Dimethylphenol	0.17		0.4	ND	U	g	0.7	ND	U	g	0.3	ND	U	g
Benzoic Acid	0.06		0.27	0.09	J		0.39	ND	U	g	0.20	0.08	J	
bis(2-Chloroethoxy) Methane	0.04		0.2	ND	U	g	0.2	ND	U	g	0.1	ND	U	g
2,4-Dichlorophenol	0.04		0.2	ND	U	g	0.3	ND	U	g	0.2	ND	U	g
1,2,4-Trichlorobenzene	0.03		0.2	ND	U	g	0.2	ND	U	g	0.1	ND	U	g
Naphthalene	0.04		0.2	ND	U	g	0.2	ND	U	g	0.1	ND	U	g
4-Chloroaniline	0.10		0.5	ND	U	g	0.7	ND	U	g	0.4	ND	U	g
Hexachlorobutadiene	0.03		0.2	ND	U	g	0.2	ND	U	g	0.1	ND	U	g
4-Chloro-3-Methylphenol	0.06		0.3	ND	U	g	0.4	ND	U	g	0.2	ND	U	g
2-Methylnaphthalene	0.03		0.2	ND	U	g	0.2	ND	U	g	0.1	ND	U	g
Hexachlorocyclopentadiene	0.03		0.1	ND	U	g	0.2	ND	U	g	0.1	ND	U	g
2,4,6-Trichlorophenol	0.04		0.2	ND	U	g	0.3	ND	U	g	0.2	ND	U	g
2,4,5-Trichlorophenol	0.03		0.12	ND	U	g	0.17	ND	U	g	0.09	ND	U	g
2-Chloronaphthalene	0.03		0.2	ND	U	g	0.2	ND	U	g	0.1	ND	U	g
2-Nitroaniline	0.02		0.09	ND	U	g	0.13	ND	U	g	0.07	ND	U	g
Dimethyl Phthalate	0.04		0.2	ND	U	g	0.2	ND	U	g	0.1	ND	U	g
Acenaphthylene	0.04		0.2	ND	U	g	0.3	ND	U	g	0.1	ND	U	g
3-Nitroaniline	0.11		0.53	ND	U	g	0.77	ND	U	g	0.39	ND	U	g
Acenaphthene	0.03		0.1	ND	U	g	0.2	ND	U	g	0.1	ND	U	g
2,4-Dinitrophenol	0.09		0.43	ND	U	g	0.62	ND	U	g	0.32	ND	U	g
4-Nitrophenol	0.07		0.32	ND	U	g	0.46	ND	U	g	0.23	ND	U	g
Dibenzofuran	0.03		0.1	ND	U	g	0.2	ND	U	g	0.1	ND	U	g
2,6-Dinitrotoluene	0.04		0.2	ND	U	g	0.3	ND	U	g	0.1	ND	U	g

Base: Kotzebue LRRS						Table 20.2.1.7								
Site: Background Samples						Analytical Data Summary								
Extraction Method: EPA Method 3550						EPA Method 8270								
Analytical Method: EPA Method 8270														
Matrix: Soil														
Units: mg/kg														
			Environmental Samples											
		Field ID:		SD4-01				SS1A-01				SS1B-01		
		Batch ID:		H718				H718				H718		
Parameters	MDL		PQL	Result	Validity	Comments	PQL	Result	Validity	Comments	PQL	Result	Validity	Comments
2,4-Dinitrotoluene	0.02		0.1	ND	U	g	0.2	ND	U	g	0.1	ND	U	g
Diethyl Phthalate	0.04		0.2	ND	U	g	0.2	ND	U	g	0.1	ND	U	g
4-Chlorophenyl Phenyl Ether	0.02		0.1	ND	U	g	0.2	ND	U	g	0.1	ND	U	g
Fluorene	0.03		0.1	ND	U	g	0.2	ND	U	g	0.1	ND	U	g
4-Nitroaniline	0.13		0.63	ND	U	g	0.92	ND	U	g	0.47	ND	U	g
4,6-Dinitro-2-Methylphenol	0.09		0.43	ND	U	g	0.62	ND	U	g	0.31	ND	U	g
N-Nitrosodiphenylamine	0.09		0.4	ND	U	g	0.6	ND	U	g	0.3	ND	U	g
4-Bromophenyl Phenyl Ether	0.02		0.1	ND	U	g	0.2	ND	U	g	0.1	ND	U	g
Hexachlorobenzene	0.03		0.2	ND	U	g	0.2	ND	U	g	0.1	ND	U	g
Pentachlorophenol	0.03		0.16	ND	U	g	0.23	ND	U	g	0.12	ND	U	g
Phenanthrene	0.03		0.2	ND	U	g	0.2	ND	U	g	0.1	ND	U	g
Anthracene	0.04		0.2	ND	U	g	0.3	ND	U	g	0.2	ND	U	g
di-n-butyl Phthalate	0.06		0.3	ND	U	g	0.4	ND	U	g	0.2	ND	U	g
Fluroanthene	0.03		0.2	ND	U	g	0.2	ND	U	g	0.1	ND	U	g
Pyrene	0.03		0.1	ND	U	g	0.2	ND	U	g	0.1	ND	U	g
Butylbenzylphthalate	0.02		0.1	ND	U	g	0.2	ND	U	g	0.1	ND	U	g
3,3'-Dichlorobenzidine	0.06		0.3	ND	U	g	0.4	ND	U	g	0.2	ND	U	g
Benzo(a)anthracene	0.04		0.2	ND	U	g	0.3	ND	U	g	0.1	ND	U	g
bis(2-Ethylhexyl) Phthalate	0.04		0.2	ND	U	g	0.3	ND	U	g	0.1	ND	U	g
Chrysene	0.05		0.2	ND	U	g	0.3	ND	U	g	0.2	ND	U	g
di-n-Octylphthalate	0.02		0.1	ND	U	g	0.2	ND	U	g	0.1	ND	U	g
Benzo(b)fluoranthene	0.04		0.2	ND	U	g	0.3	ND	U	g	0.2	ND	U	g
Benzo(k)fluoranthene	0.07		0.4	ND	U	g	0.5	ND	U	g	0.3	ND	U	g
Benzo(a)pyrene	0.04		0.2	ND	U	g	0.3	ND	U	g	0.1	ND	U	g
Indeno(1,2,3-c,d)pyrene	0.03		0.1	ND	U	g	0.2	ND	U	g	0.1	ND	U	g
Dibenzo(a,h)anthracene	0.02		0.1	ND	U	g	0.2	ND	U	g	0.1	ND	U	g
Benzo(g,h,i)perylene	0.03		0.2	ND	U	g	0.2	ND	U	g	0.1	ND	U	g

Base: Kotzebue LRRS
Site: Background Samples
Extraction Method: EPA Method 3550
Analytical Method: EPA Method 8270
Matrix: Soil
Units: mg/kg

Table 20.2.1.7
Analytical Data Summary
EPA Method 8270

			Environmental Samples								
		Field ID:		SS1C-01				SS4-01			
		Batch ID:		H718				H718			
Parameters	MDL		PQL	Result	Validity	Comments	PQL	Result	Validity	Comments	
Phenol	0.05		0.2	ND	U	g	0.3	ND	U	g	
bis(2-Chloroethyl) Ether	0.04		0.1	ND	U	g	0.2	ND	U	g	
2-Chlorophenol	0.07		0.3	ND	U	g	0.4	ND	U	g	
1,3-Dichlorobenzene	0.04		0.1	ND	U	k	0.2	ND	U	k	
1,4-Dichlorobenzene	0.03		0.1	ND	U	g	0.1	ND	U	g	
Benzyl Alcohol	0.05		0.2	ND	U	g	0.3	ND	U	g	
1,2-Dichlorobenzene	0.04		0.1	ND	U	g	0.2	ND	U	g	
2-Methylphenol	0.10		0.3	ND	U	g	0.5	ND	U	g	
2,2'-Oxybis (1-Chloropropane)	0.03		0.1	ND	U	g	0.2	ND	U	g	
4-Methylphenol	0.08		0.3	ND	U	g	0.4	ND	U	g	
N-Nitrosodi-n-propylamine	0.03		0.1	ND	U	g	0.1	ND	U	g	
Hexachloroethane	0.04		0.1	ND	U	g	0.2	ND	U	g	
Nitrobenzene	0.02		0.1	ND	U	g	0.1	ND	U	g	
Isophorone	0.03		0.1	ND	U	g	0.2	ND	U	g	
2-Nitrophenol	0.03		0.1	ND	U	g	0.2	ND	U	g	
2,4-Dimethylphenol	0.17		0.3	ND	U	g	0.5	ND	U	g	
Benzoic Acid	0.06		0.20	ND	U	g	0.28	0.14	J		
bis(2-Chloroethoxy) Methane	0.04		0.1	ND	U	g	0.2	ND	U	g	
2,4-Dichlorophenol	0.04		0.2	ND	U	g	0.2	ND	U	g	
1,2,4-Trichlorobenzene	0.03		0.1	ND	U	g	0.2	ND	U	g	
Naphthalene	0.04		0.1	ND	U	g	0.2	ND	U	g	
4-Chloroaniline	0.10		0.4	ND	U	g	0.5	ND	U	g	
Hexachlorobutadiene	0.03		0.1	ND	U	g	0.2	ND	U	g	
4-Chloro-3-Methylphenol	0.06		0.2	ND	U	g	0.3	ND	U	g	
2-Methylnaphthalene	0.03		0.1	ND	U	g	0.2	ND	U	g	
Hexachlorocyclopentadiene	0.03		0.1	ND	U	g	0.1	ND	U	g	
2,4,6-Trichlorophenol	0.04		0.1	ND	U	g	0.2	ND	U	g	
2,4,5-Trichlorophenol	0.03		0.09	ND	U	g	0.13	ND	U	g	
2-Chloronaphthalene	0.03		0.1	ND	U	g	0.2	ND	U	g	
2-Nitroaniline	0.02		0.07	ND	U	g	0.10	ND	U	g	
Dimethyl Phthalate	0.04		0.1	ND	U	g	0.2	ND	U	g	
Acenaphthylene	0.04		0.1	ND	U	g	0.2	ND	U	g	
3-Nitroaniline	0.11		0.39	ND	U	g	0.55	ND	U	g	
Acenaphthene	0.03		0.1	ND	U	g	0.2	ND	U	g	
2,4-Dinitrophenol	0.09		0.31	ND	U	g	0.45	ND	U	g	
4-Nitrophenol	0.07		0.23	ND	U	g	0.33	ND	U	g	
Dibenzofuran	0.03		0.1	ND	U	g	0.2	ND	U	g	
2,6-Dinitrotoluene	0.04		0.1	ND	U	g	0.2	ND	U	g	

Base: Kotzebue LRRS						Table 20.2.1.7								
Site: Background Samples						Analytical Data Summary								
Extraction Method: EPA Method 3550						EPA Method 8270								
Analytical Method: EPA Method 8270														
Matrix: Soil														
Units: mg/kg														
			Environmental Samples											
		Field ID:		SS1C-01				SS4-01						
		Batch ID:		H718				H718						
Parameters	MDL		PQL	Result	Validity	Comments	PQL	Result	Validity	Comments				
2,4-Dinitrotoluene	0.02		0.1	ND	U	g	0.1	ND	U	g				
Diethyl Phthalate	0.04		0.1	ND	U	g	0.2	ND	U	g				
4-Chlorophenyl Phenyl Ether	0.02		0.1	ND	U	g	0.1	ND	U	g				
Fluorene	0.03		0.1	ND	U	g	0.2	ND	U	g				
4-Nitroaniline	0.13		0.47	ND	U	g	0.66	ND	U	g				
4,6-Dinitro-2-Methylphenol	0.09		0.31	ND	U	g	0.45	ND	U	g				
N-Nitrosodiphenylamine	0.09		0.3	ND	U	g	0.4	ND	U	g				
4-Bromophenyl Phenyl Ether	0.02		0.1	ND	U	g	0.1	ND	U	g				
Hexachlorobenzene	0.03		0.1	ND	U	g	0.2	ND	U	g				
Pentachlorophenol	0.03		0.12	ND	U	g	0.16	ND	U	g				
Phenanthrene	0.03		0.1	ND	U	g	0.2	ND	U	g				
Anthracene	0.04		0.2	ND	U	g	0.2	ND	U	g				
di-n-butyl Phthalate	0.06		0.2	ND	U	g	0.3	ND	U	g				
Fluroanthene	0.03		0.1	ND	U	g	0.2	ND	U	g				
Pyrene	0.03		0.1	ND	U	g	0.1	ND	U	g				
Butylbenzylphthalate	0.02		0.1	ND	U	g	0.1	ND	U	g				
3,3'-Dichlorobenzidine	0.06		0.2	ND	U	g	0.3	ND	U	g				
Benzo(a)anthracene	0.04		0.1	ND	U	g	0.2	ND	U	g				
bis(2-Ethylhexyl) Phthalate	0.04		0.1	ND	U	g	0.2	ND	U	g				
Chrysene	0.05		0.2	ND	U	g	0.2	ND	U	g				
di-n-Octylphthalate	0.02		0.1	ND	U	g	0.1	ND	U	g				
Benzo(b)fluoranthene	0.04		0.2	ND	U	g	0.2	ND	U	g				
Benzo(k)fluoranthene	0.07		0.3	ND	U	g	0.4	ND	U	g				
Benzo(a)pyrene	0.04		0.1	ND	U	g	0.2	ND	U	g				
Indeno(1,2,3-c,d)pyrene	0.03		0.1	ND	U	g	0.1	ND	U	g				
Dibenzo(a,h)anthracene	0.02		0.1	ND	U	g	0.1	ND	U	g				
Benzo(g,h,i)perylene	0.03		0.1	ND	U	g	0.2	ND	U	g				

Base: Kotzebue LRRS						Table 2.2.1									
Site: Background Samples						Analytical Data Summary									
Extraction Method: EPA Method 3510						Method AK102									
Analytical Method: Method AK102															
Matrix: Water															
Units: mg/L															
			Environmental Samples												
		Field ID:		SW1-01				SW2-01				SW3-01			
		Batch ID:		H700				H700				H700			
Parameters	MDL		PQL	Result	Validity	Comments	PQL	Result	Validity	Comments	PQL	Result	Validity	Comments	
Diesel Hydrocarbons	0.06		0.11	ND	U	g	0.11	ND	U	g	0.11	ND	U	g	

Base: Kotzebue LRRS						Table 2.2.1										
Site: Background Samples						Analytical Data Summary										
Extraction Method: EPA Method 3510						Method AK102										
Analytical Method: Method AK102																
Matrix: Water																
Units: mg/L																
			Environmental Samples													
		Field ID:		SW4-01												
		Batch ID:		H718												
Parameters	MDL		PQL	Result	Validity	Comments										
Diesel Hydrocarbons	0.06		0.11	ND	U	g										

Base: Kotzebue LRRS						Table 2.2.1										
Site: Background Samples						Analytical Data Summary										
Extraction Method: EPA Method 3510						Method AK102										
Analytical Method: Method AK102																
Matrix: Water																
Units: mg/L																
			Environmental Samples													
		Field ID:		MW1-01												
		Batch ID:		H772												
Parameters	MDL		PQL	Result	Validity	Comments										
Diesel Hydrocarbons	0.06		0.12	ND	U	g										

Base: Kotzebue LRRS						Table 2.2.2										
Site: Background Samples						Analytical Data Summary										
Extraction Method: EPA Method 3010 (unfiltered)/3005 (filtered)						EPA Method 6010										
Analytical Method: EPA Method 6010																
Matrix: Water																
Units: mg/L																
			Environmental Samples													
		Field ID:		SW2-01				SW2-01				SW3-01				
		Batch ID:		H700				H700				H700				
Parameters	MDL		PQL	Result (Unfiltered)	Validity	Comments	PQL	Result (Filtered)	Validity	Comments	PQL	Result (Unfiltered)	Validity	Comments		
Aluminum	0.01		0.03	0.12		g	0.03	0.12		g	0.03	0.02	J			
Antimony	0.03		0.1	ND	U	g	0.1	ND	U	g	0.1	ND	U	g		
Arsenic	0.03		0.1	ND	U	g	0.1	ND	U	g	0.1	ND	U	g		
Barium	0.004		0.01	0.01		g	0.01	0.01		g	0.01	0.05		g		
Beryllium	0.0002		0.001	ND	U	g	0.001	ND	U	g	0.001	ND	U	g		
Cadmium	0.006		0.02	ND	U	g	0.03	ND	U	g	0.02	ND	U	g		
Calcium	0.02		0.07	3.2		g	0.06	3.2		g	0.07	38		g		
Chromium, total	0.002		0.006	ND	U	g	0.006	ND	U	g	0.006	ND	U	g		
Cobalt	0.003		0.01	ND	U	g	0.01	ND	U	g	0.01	ND	U	g		
Copper	0.0001		0.002	0.007		a	0.003	0.005		g	0.002	0.001	B J	a		
Iron	0.006		0.02	0.55		g	0.03	0.30		g	0.02	1.1		g		
Magnesium	0.01		0.04	1.8		g	0.03	1.8		g	0.04	8.2		g		
Manganese	0.003		0.01	0.01		g	0.01	0.01		g	0.01	0.06		g		
Molybdenum	0.002		0.007	ND	U	g	0.006	ND	U	g	0.007	ND	U	g		
Nickel	0.006		0.02	ND	U	g	0.03	ND	U	g	0.02	ND	U	g		
Potassium	0.12		0.5	0.7		g	0.6	0.7		g	0.5	1.3		g		
Selenium	0.03		0.1	ND	U	g	0.1	ND	U	g	0.1	ND	U	g		
Silver	0.001		0.004	ND	U	g	0.003	ND	U	g	0.004	ND	U	g		
Sodium	0.07		0.2	5.3		g	0.2	5.3		g	0.2	2.9		g		
Thallium	0.01		0.04	ND	U	g	0.03	ND	U	g	0.04	ND	U	g		
Vanadium	0.001		0.004	ND	U	g	0.003	ND	U	g	0.004	ND	U	g		
Zinc	0.002		0.008	0.013		g	0.0011	0.006	J		0.008	0.007	J			

Base: Kotzebue LRRS						Table 2.2.2										
Site: Background Samples						Analytical Data Summary										
Extraction Method: EPA Method 3010 (unfiltered)/3005 (filtered)						EPA Method 6010										
Analytical Method: EPA Method 6010																
Matrix: Water																
Units: mg/L																
			Environmental Samples													
		Field ID:		SW3-01												
		Batch ID:		H700												
Parameters	MDL		PQL	Result (Filtered)	Validity	Comments										
Aluminum	0.01		0.03	0.01	J											
Antimony	0.03		0.1	ND	U	g										
Arsenic	0.03		0.1	ND	U	g										
Barium	0.004		0.01	0.05		g										
Beryllium	0.0002		0.001	ND	U	g										
Cadmium	0.006		0.03	ND	U	g										
Calcium	0.02		0.06	38		g										
Chromium, total	0.002		0.006	ND	U	g										
Cobalt	0.003		0.01	ND	U	g										
Copper	0.0001		0.003	0.002	J											
Iron	0.006		0.03	0.54		g										
Magnesium	0.01		0.03	8.2		g										
Manganese	0.003		0.01	0.05		g										
Molybdenum	0.002		0.006	ND	U	g										
Nickel	0.006		0.03	ND	U	g										
Potassium	0.12		0.6	1.1		g										
Selenium	0.03		0.1	ND	U	g										
Silver	0.001		0.003	ND	U	g										
Sodium	0.07		0.2	3.0		g										
Thallium	0.01		0.03	ND	U	g										
Vanadium	0.001		0.003	ND	U	g										
Zinc	0.002		0.0011	0.004	J											

Base: Kotzebue LRRS						Table 2.2.2										
Site: Background Samples						Analytical Data Summary										
Extraction Method: EPA Method 3010 (unfiltered)/3005 (filtered)						EPA Method 6010										
Analytical Method: EPA Method 6010																
Matrix: Water																
Units: mg/L																
			Environmental Samples													
		Field ID:		SW4-01				SW4-01								
		Batch ID:		H718				H718								
Parameters	MDL		PQL	Result (Unfiltered)	Validity	Comments	PQL	Result (Filtered)	Validity	Comments						
Aluminum	0.01		0.03	0.38		g	0.03	0.05		g						
Antimony	0.03		0.1	ND	U	g	0.1	ND	U	g						
Arsenic	0.03		0.1	ND	U	g	0.1	ND	U	g						
Barium	0.004		0.01	0.04		g	0.01	0.03		g						
Beryllium	0.0002		0.001	ND	U	g	0.001	ND	U	g						
Cadmium	0.006		0.02	ND	U	g	0.03	ND	U	g						
Calcium	0.02		0.07	7.7		g	0.06	7.4		g						
Chromium, total	0.002		0.006	0.002	J		0.006	ND	U	g						
Cobalt	0.003		0.01	ND	U	g	0.01	ND	U	g						
Copper	0.0001		0.002	0.006	B	a,k	0.003	0.004		k						
Iron	0.006		0.02	2.2		g	0.03	0.91		g						
Magnesium	0.01		0.04	2.3		g	0.03	2.2		g						
Manganese	0.003		0.01	0.06		g	0.01	0.02		g						
Molybdenum	0.002		0.007	ND	U	g	0.006	ND	U	g						
Nickel	0.006		0.02	ND	U	g	0.03	ND	U	g						
Potassium	0.12		0.5	0.4	J		0.6	0.4	J							
Selenium	0.03		0.1	ND	U	g	0.1	ND	U	g						
Silver	0.001		0.004	ND	U	g	0.003	ND	U	g						
Sodium	0.07		0.2	2.8		k	0.2	2.8		g						
Thallium	0.01		0.04	ND	U	g	0.03	ND	U	g						
Vanadium	0.001		0.004	0.002	J		0.003	0.001	J							
Zinc	0.002		0.008	0.011	B	k	0.011	0.004	J	k						

Base: Kotzebue LRRS

Site: Background Samples

Extraction Method: EPA Method 3010 (unfiltered)/3005 (filtered)

Analytical Method: EPA Method 6010

Matrix: Water

Units: mg/L

Table 2.2.2

Analytical Data Summary

EPA Method 6010

			Environmental Samples			
		Field ID:	SW2-01			
		Batch ID:	H753			
Parameters	MDL	PQL	Result (Unfiltered)	Validity	Comments	
Calcium	0.02	0.07	3.4	J	c	
Iron	0.006	0.02	0.50		g	
Magnesium	0.01	0.04	1.9		g	
Potassium	0.12	0.5	0.5		g	
Sodium	0.07	0.2	5.2		g	

Base: Kotzebue LRRS						Table 2.2.2										
Site: Background Samples						Analytical Data Summary										
Extraction Method: EPA Method 3010 (unfiltered)/3005 (filtered)						EPA Method 6010										
Analytical Method: EPA Method 6010																
Matrix: Water																
Units: mg/L																
			Environmental Samples													
		Field ID:		MW1-01				MW1-01								
		Batch ID:		H772				H772								
Parameters	MDL		PQL	Result (Unfiltered)	Validity	Comments	PQL	Result (Filtered)	Validity	Comments						
Aluminum	0.01		0.03	2.8		g	0.03	ND	U	a,k						
Antimony	0.03		0.1	ND	U	g	0.1	ND	U	g						
Arsenic	0.03		0.1	ND	U	g	0.1	ND	U	g						
Barium	0.004		0.01	0.19		g	0.01	0.11		g						
Beryllium	0.0002		0.001	ND	U	g	0.001	ND	U	g						
Cadmium	0.006		0.02	ND	U	g	0.02	ND	U	g						
Calcium	0.02		0.07	140	J	c	0.07	140	J	c,k						
Chromium, total	0.002		0.006	0.011		g	0.006	ND	U	g						
Cobalt	0.003		0.01	0.01	J		0.01	ND	U	g						
Copper	0.0001		0.002	0.020		g	0.002	0.005		g						
Iron	0.006		0.02	7.3		g	0.02	ND	U	g						
Magnesium	0.01		0.04	32		g	0.04	30		g						
Manganese	0.003		0.01	0.25		g	0.01	0.07		g						
Molybdenum	0.002		0.007	ND	U	g	0.007	ND	U	g						
Nickel	0.006		0.02	0.02		g	0.02	ND	U	g						
Potassium	0.12		0.5	3.6		g	0.5	3.3		g						
Selenium	0.03		0.1	0.0	J		0.1	ND	U	g						
Silver	0.001		0.004	ND	U	g	0.004	ND	U	g						
Sodium	0.07		0.2	41		g	0.2	41		k						
Thallium	0.01		0.04	ND	U	g	0.04	ND	U	g						
Vanadium	0.001		0.004	0.011		g	0.004	0.002	J							
Zinc	0.002		0.008	0.024		a	0.008	0.004	J							

Base: Kotzebue LRRS					Table 2.2.3													
Site: Background Samples					Analytical Data Summary													
Extraction Method: See below					EPA Method 7000													
Analytical Method: See below																		
Matrix: Water																		
Units: mg/L																		
				Environmental Samples														
			Field ID:		SW2-01				SW2-01				SW3-01					
	EPA		Batch ID:		H700				H700				H700					
Parameters	Method	MDL		PQL	Result (Unfiltered)	Validity	Comments	PQL	Result (Filtered)	Validity	Comments	PQL	Result (Unfiltered)	Validity	Comments			
Lead	3020/7421	0.001		0.004	0.002	B J	a	0.006	0.004	B J	a	0.004	0.002	B J	a			
Mercury	7470	0.00002		0.00006	0.00003	B J	a	0.00006	ND	U	g	0.00006	0.0003	B J	a			

Base: Kotzebue LRRS								Table 2.2.3								
Site: Background Samples								Analytical Data Summary								
Extraction Method: See below								EPA Method 7000								
Analytical Method: See below																
Matrix: Water																
Units: mg/L																
				Environmental Samples												
			Field ID:		SW3-01											
	EPA		Batch ID:		H700											
Parameters	Method	MDL		PQL	Result	Validity	Comments									
					(Filtered)											
Lead	3020/7421	0.001		0.006	0.002	B J	a									
Mercury	7470	0.00002		0.00006	ND	U	g									

Base: Kotzebue LRRS									Table 2.2.3			
Site: Background Samples									Analytical Data Summary			
Extraction Method: See below									EPA Method 7000			
Analytical Method: See below												
Matrix: Water												
Units: mg/L												
				Environmental Samples								
			Field ID:		SW4-01				SW4-01			
	EPA		Batch ID:		H718				H718			
Parameters	Method	MDL		PQL	Result	Validity	Comments	PQL	Result	Validity	Comments	
					(Unfiltered)				(Filtered)			
Lead	3020/7421	0.001		0.004	0.002	B J	a	0.006	0.002	B J	a	
Mercury	7470	0.00002		0.00006	0.00003	B J	a,k	0.00006	ND	U	g	

Base: Kotzebue LRRS					Table 2.2.3													
Site: Background Samples					Analytical Data Summary													
Extraction Method: See below					EPA Method 7000													
Analytical Method: See below																		
Matrix: Water																		
Units: mg/L																		
				Environmental Samples														
			Field ID:		MW1-01				MW1-01									
	EPA		Batch ID:		H772				H772									
Parameters	Method	MDL		PQL	Result (Unfiltered)	Validity	Comments	PQL	Result (Filtered)	Validity	Comments							
Lead	3020/7421	0.001		0.004	0.006		g	0.004	ND	U	k							
Mercury	7470	0.00002		0.00006	0.00004	J	g	0.00006	ND	U	g							

Base: Kotzebue LRRS
Site: Background Samples
Extraction Method: EPA Method 3510
Analytical Method: EPA Method 8081
Matrix: Water
Units: ug/L

Table 2.2.4
Analytical Data Summary
EPA Method 8081

					Environmental Samples											
			Field ID:		SW2-01		SW2-01				SW3-01		SW3-01			
			Batch ID:		H700		H700				H700		H700			
	DB-5	DB-608		DB-5	DB-5	DB-608	DB-608			DB-5	DB-5	DB-608	DB-608			
Parameters	MDL	MDL		PQL	Result	PQL	Result	Validity	Comments	PQL	Result	PQL	Result	Validity	Comments	
alpha BHC	0.002	0.001		0.01	ND	0.01	ND	U	g	0.01	0.04	0.01	ND	U	h	
beta BHC	0.002	0.003		0.01	ND	0.01	ND	U	g	0.01	ND	0.01	ND	U	g	
delta BHC	0.002	0.002		0.01	ND	0.01	ND	U	g	0.01	ND	0.01	ND	U	g	
gamma BHC (Lindane)	0.002	0.002		0.01	ND	0.01	ND	U	g	0.01	ND	0.01	ND	U	g	
Heptachlor	0.004	0.004		0.01	ND	0.01	ND	U	g	0.01	ND	0.01	ND	U	g	
Aldrin	0.005	0.010		0.02	ND	0.03	ND	U	g	0.02	ND	0.03	ND	U	g	
Heptachlor Epoxide	0.003	0.002		0.01	ND	0.01	ND	U	g	0.01	ND	0.01	ND	U	g	
Endosulfan I	0.004	0.004		0.01	ND	0.01	ND	U	g	0.01	ND	0.01	ND	U	g	
Dieldrin	0.004	0.005		0.02	ND	0.01	ND	U	g	0.02	0.02	0.01	ND	U	h	
4,4'-DDE	0.009	0.010		0.029	ND	0.032	ND	U	g	0.029	ND	0.032	ND	U	g	
Endrin	0.004	0.004		0.014	ND	0.012	ND	U	g	0.014	ND	0.012	ND	U	g	
Endosulfan II	0.007	0.005		0.021	ND	0.015	ND	U	g	0.021	0.020	0.015	ND	U	h	
4,4'-DDD	0.005	0.004		0.017	0.039	0.014	ND	U	h	0.017	ND	0.014	ND	U	g	
Endosulfan Sulfate	0.003	0.003		0.01	0.01	0.01	ND	U	h	0.01	ND	0.01	ND	U	g	
4,4'-DDT	0.010	0.008		0.031	ND	0.026	ND	U	g	0.031	ND	0.026	ND	U	g	
Methoxychlor	0.038	0.035		0.12	ND	0.11	ND	U	g	0.12	ND	0.11	ND	U	g	
Endrin Aldehyde	0.010	0.010		0.031	ND	0.031	ND	U	g	0.031	ND	0.031	ND	U	g	
gamma-Chlordane	0.003	0.003		0.01	ND	0.01	ND	U	g	0.01	ND	0.01	ND	U	g	
alpha-Chlordane	0.003	0.004		0.01	ND	0.01	ND	U	g	0.01	ND	0.01	ND	U	g	
Toxaphene	0.25	0.15		0.79	ND	0.46	ND	U	g	0.79	ND	0.46	ND	U	g	
Arochlor 1016	0.3	0.3		0.9	ND	0.9	ND	U	g	0.9	ND	0.9	ND	U	g	
Arochlor 1242	0.2	0.3		0.7	ND	1.0	ND	U	g	0.7	ND	1.0	ND	U	g	
Arochlor 1248	0.3	0.2		0.8	ND	0.7	ND	U	g	0.8	ND	0.7	ND	U	g	
Arochlor 1254	0.2	0.3		1.0	ND	1.0	ND	U	g	1.0	ND	1.0	ND	U	g	
Arochlor 1260	0.3	0.3		1.0	ND	0.9	ND	U	g	1.0	ND	0.9	ND	U	g	
Arochlor 1221	0.2	0.2		0.8	ND	0.8	ND	U	g	0.8	ND	0.8	ND	U	g	
Arochlor 1232	0.3	0.3		0.8	ND	1.1	ND	U	g	0.8	ND	1.1	ND	U	g	

Base: Kotzebue LRRS							Table 2.2.4				
Site: Background Samples							Analytical Data Summary				
Extraction Method: EPA Method 3510							EPA Method 8081				
Analytical Method: EPA Method 8081											
Matrix: Water											
Units: ug/L											
				Environmental Samples							
			Field ID:		SW4-01		SW4-01				
			Batch ID:		H718		H718				
	DB-5	DB-608		DB-5	DB-5	DB-608	DB-608				
Parameters	MDL	MDL		PQL	Result	PQL	Result	Validity	Comments		
alpha BHC	0.002	0.001		0.01	ND	0.01	ND	U	g		
beta BHC	0.002	0.003		0.01	ND	0.01	ND	U	g		
delta BHC	0.002	0.002		0.01	ND	0.01	ND	U	g		
gamma BHC (Lindane)	0.002	0.002		0.01	ND	0.01	ND	U	g		
Heptachlor	0.004	0.004		0.01	ND	0.01	ND	U	g		
Aldrin	0.005	0.010		0.02	ND	0.03	ND	U	g		
Heptachlor Epoxide	0.003	0.002		0.01	ND	0.01	ND	U	g		
Endosulfan I	0.004	0.004		0.01	ND	0.01	ND	U	g		
Dieldrin	0.004	0.005		0.02	ND	0.01	ND	U	g		
4,4'-DDE	0.009	0.010		0.029	ND	0.032	ND	U	g		
Endrin	0.004	0.004		0.014	ND	0.012	ND	U	g		
Endosulfan II	0.007	0.005		0.021	ND	0.015	ND	U	g		
4,4'-DDD	0.005	0.004		0.017	0.036	0.014	ND	U	h		
Endosulfan Sulfate	0.003	0.003		0.01	ND	0.01	ND	U	g		
4,4'-DDT	0.010	0.008		0.031	ND	0.026	ND	U	g		
Methoxychlor	0.038	0.035		0.12	ND	0.11	ND	U	g		
Endrin Aldehyde	0.010	0.010		0.031	ND	0.031	ND	U	g		
gamma-Chlordane	0.003	0.003		0.01	ND	0.01	ND	U	g		
alpha-Chlordane	0.003	0.004		0.01	ND	0.01	ND	U	g		
Toxaphene	0.25	0.15		0.79	ND	0.46	ND	U	g		
Arochlor 1016	0.3	0.3		0.9	ND	0.9	ND	U	g		
Arochlor 1242	0.2	0.3		0.7	ND	1.0	ND	U	g		
Arochlor 1248	0.3	0.2		0.8	ND	0.7	ND	U	g		
Arochlor 1254	0.2	0.3		1.0	ND	1.0	ND	U	g		
Arochlor 1260	0.3	0.3		1.0	ND	0.9	ND	U	g		
Arochlor 1221	0.2	0.2		0.8	ND	0.8	ND	U	g		
Arochlor 1232	0.3	0.3		0.8	ND	1.1	ND	U	g		

Base: Kotzebue LRRS

Site: Background Samples

Extraction Method: EPA Method 3510

Analytical Method: EPA Method 8081

Matrix: Water

Units: ug/L

Table 2.2.4
Analytical Data Summary
EPA Method 8081

			Environmental Samples						
		Field ID:		MW1-01		MW1-01			
		Batch ID:		H772		H772			
	DB-5	DB-608	DB-5	DB-5	DB-608	DB-608			
Parameters	MDL	MDL	PQL	Result	PQL	Result	Validity	Comments	
alpha BHC	0.002	0.001	0.01	ND	0.01	ND	U	g	
beta BHC	0.002	0.003	0.01	ND	0.01	ND	U	g	
delta BHC	0.002	0.002	0.01	0.05	0.01	ND	U	h	
gamma BHC (Lindane)	0.002	0.002	0.01	ND	0.01	ND	U	g	
Heptachlor	0.004	0.004	0.01	ND	0.01	ND	U	g	
Aldrin	0.005	0.010	0.02	ND	0.03	ND	U	g	
Heptachlor Epoxide	0.003	0.002	0.01	0.10	0.01	ND	U	h	
Endosulfan I	0.004	0.004	0.01	ND	0.01	ND	U	g	
Dieldrin	0.004	0.005	0.02	ND	0.01	ND	U	g	
4,4'-DDE	0.009	0.010	0.029	ND	0.032	ND	U	g	
Endrin	0.004	0.004	0.014	0.010	0.012	ND	U	a,h	
Endosulfan II	0.007	0.005	0.021	ND	0.015	ND	U	g	
4,4'-DDD	0.005	0.004	0.017	ND	0.014	ND	U	g	
Endosulfan Sulfate	0.003	0.003	0.01	ND	0.01	ND	U	g	
4,4'-DDT	0.010	0.008	0.031	ND	0.026	ND	U	g	
Methoxychlor	0.038	0.035	0.12	ND	0.11	ND	U	g	
Endrin Aldehyde	0.010	0.010	0.031	ND	0.031	ND	U	g	
gamma-Chlordane	0.003	0.003	0.01	ND	0.01	ND	U	g	
alpha-Chlordane	0.003	0.004	0.01	ND	0.01	ND	U	g	
Toxaphene	0.25	0.15	0.79	ND	0.46	ND	U	g	
Arochlor 1016	0.3	0.3	0.9	ND	0.9	ND	U	g	
Arochlor 1242	0.2	0.3	0.7	ND	1.0	ND	U	g	
Arochlor 1248	0.3	0.2	0.8	ND	0.7	ND	U	g	
Arochlor 1254	0.2	0.3	1.0	ND	1.0	ND	U	g	
Arochlor 1260	0.3	0.3	1.0	ND	0.9	ND	U	g	
Arochlor 1221	0.2	0.2	0.8	ND	0.8	ND	U	g	
Arochlor 1232	0.3	0.3	0.8	ND	1.1	ND	U	g	

Base: Kotzebue LRRS
Site: Background Samples
Extraction Method: EPA Method 8260
Analytical Method: EPA Method 8260
Matrix: Water
Units: ug/L

Table 2.2.5
Analytical Data Summary
EPA Method 8260

			Environmental Samples												
		Field ID:		SW1-01				SW2-01				SW3-01			
		Batch ID:		H700				H700				H700			
Parameters	MDL		PQL	Result	Validity	Comments	PQL	Result	Validity	Comments	PQL	Result	Validity	Comments	
Chloromethane	1.03		3	ND	U	g	3	ND	U	g	3	ND	U	g	
Bromomethane	0.42		2	ND	U	g	2	ND	U	g	2	ND	U	g	
Vinyl Chloride	0.52		2	ND	U	g	2	ND	U	g	2	ND	U	g	
Chloroethane	0.59		2	ND	U	g	2	ND	U	g	2	ND	U	g	
Methylene Chloride	0.41		1	ND	U	g	1	ND	U	g	1	ND	U	g	
Acetone	2.90		9	ND	U	g	9	ND	U	g	9	ND	U	g	
Carbon Disulfide	0.40		2	ND	U	g	2	ND	U	g	2	ND	U	g	
1,1-Dichloroethene	0.71		2	ND	U	g	2	ND	U	g	2	ND	U	g	
1,1-Dichloroethane	0.50		2	ND	U	g	2	ND	U	g	2	ND	U	g	
trans-1,2-Dichloroethene	0.42		1	ND	U	g	1	ND	U	g	1	ND	U	g	
cis-1,2-Dichloroethylene	0.43		2	ND	U	g	2	ND	U	g	2	ND	U	g	
Chloroform	0.26		1	ND	U	g	1	ND	U	g	1	ND	U	g	
1,2-Dichloroethane	0.69		2	ND	U	g	2	ND	U	g	2	ND	U	g	
Methyl Ethyl Ketone (2-butanone)	0.52		2	ND	U	g	2	ND	U	g	2	ND	U	g	
1,1,1-Trichloroethane	0.54		2	ND	U	g	2	ND	U	g	2	ND	U	g	
Carbon Tetrachloride	0.44		2	ND	U	g	2	ND	U	g	2	ND	U	g	
Vinyl Acetate	0.52		2	ND	U	g	2	ND	U	g	2	ND	U	g	
Bromodichloromethane	0.42		2	ND	U	g	2	ND	U	g	2	ND	U	g	
1,2-Dichloropropane	0.48		2	ND	U	g	2	ND	U	g	2	ND	U	g	
cis-1,3-Dichloropropene	0.38		1	ND	U	g	1	ND	U	g	1	ND	U	g	
Trichloroethylene (tce)	0.18		1	ND	U	g	1	ND	U	g	1	ND	U	g	
Dibromochloromethane	0.24		1	ND	U	g	1	ND	U	g	1	ND	U	g	
1,1,2-Trichloroethane	0.42		1	ND	U	g	1	ND	U	g	1	ND	U	g	
Benzene	0.42		2	ND	U	g	2	ND	U	g	2	ND	U	g	

Base: Kotzebue LRRS						Table 2.2.6										
Site: Background Samples						Analytical Data Summary										
Extraction Method: EPA Method 8260						EPA Method 8260										
Analytical Method: EPA Method 8260																
Matrix: Water																
Units: ug/L																
			Environmental Samples													
		Field ID:		SW1-01				SW2-01				SW3-01				
		Batch ID:		H700				H700				H700				
Parameters	MDL		PQL	Result	Validity	Comments	PQL	Result	Validity	Comments	PQL	Result	Validity	Comments		
trans-1,3-Dichloropropene	0.48		2	ND	U	g	2	ND	U	g	2	ND	U	g		
2-Chloroethyl Vinyl Ether	0.82		3	ND	U	g	3	ND	U	g	3	ND	U	g		
Bromoform	0.48		2	ND	U	g	2	ND	U	g	2	ND	U	g		
Methyl Isobutyl Ketone	1.22		4	ND	U	g	4	ND	U	g	4	ND	U	g		
2-Hexanone	0.72		2	ND	U	g	2	ND	U	g	2	ND	U	g		
Tetrachloroethylene (pce)	0.30		1	ND	U	g	1	ND	U	g	1	ND	U	g		
1,1,2,2-Tetrachloroethane	0.56		2	ND	U	g	2	ND	U	g	2	ND	U	g		
Toluene	0.46		2	ND	U	g	2	ND	U	g	2	0.5	J			
Chlorobenzene	0.20		1	ND	U	g	1	ND	U	g	1	ND	U	g		
Ethylbenzene	0.28		1	ND	U	g	1	ND	U	g	1	ND	U	g		
Styrene	0.08		1	ND	U	g	1	ND	U	g	1	ND	U	g		
1,1,2-Trichloro-1,2,2-trifluoroethane	0.37		1	ND	U	g	1	ND	U	g	1	ND	U	g		
Xylenes, total	0.68		2	ND	U	g	2	ND	U	g	2	ND	U	g		
1,1,1,2-Tetrachloroethane	0.46		2	ND	U	g	2	ND	U	g	2	ND	U	g		
1,2,3-Trichloropropane	0.41		1	ND	U	g	1	ND	U	g	1	ND	U	g		
Bromochloromethane	0.24		1	ND	U	g	1	ND	U	g	1	ND	U	g		
1-Chlorohexane	1.68		5	ND	U	g	5	ND	U	g	5	ND	U	g		
Bromobenzene	0.43		2	ND	U	g	2	ND	U	g	2	ND	U	g		

Base: Kotzebue LRRS
Site: Background Samples
Extraction Method: EPA Method 8260
Analytical Method: EPA Method 8260
Matrix: Water
Units: ug/L

Table 2.2.6
Analytical Data Summary
EPA Method 8260

Environmental Samples

Field ID:		SW4-01	
Batch ID:		H718	

Parameters	MDL	PQL	Result	Validity	Comments
Chloromethane	1.03	3	ND	U	g
Bromomethane	0.42	2	ND	U	g
Vinyl Chloride	0.52	2	ND	U	g
Chloroethane	0.59	2	ND	U	g
Methylene Chloride	0.41	1	ND	U	g
Acetone	2.90	9	ND	U	g
Carbon Disulfide	0.40	2	ND	U	g
1,1-Dichloroethene	0.71	2	ND	U	g
1,1-Dichloroethane	0.50	2	ND	U	g
trans-1,2-Dichloroethene	0.42	1	ND	U	g
cis-1,2-Dichloroethylene	0.43	2	ND	U	g
Chloroform	0.26	1	ND	U	g
1,2-Dichloroethane	0.69	2	ND	U	g
Methyl Ethyl Ketone (2-butanone)	0.52	2	ND	U	g
1,1,1-Trichloroethane	0.54	2	ND	U	g
Carbon Tetrachloride	0.44	2	ND	U	g
Vinyl Acetate	0.52	2	ND	U	g
Bromodichloromethane	0.42	2	ND	U	g
1,2-Dichloropropane	0.48	2	ND	U	g
cis-1,3-Dichloropropene	0.38	1	ND	U	g
Trichloroethylene (tce)	0.18	1	ND	U	g
Dibromochloromethane	0.24	1	ND	U	g
1,1,2-Trichloroethane	0.42	1	ND	U	g
Benzene	0.42	2	ND	U	g

Base: Kotzebue LRRS						Table 2.2.5									
Site: Background Samples						Analytical Data Summary									
Extraction Method: EPA Method 8260						EPA Method 8260									
Analytical Method: EPA Method 8260															
Matrix: Water															
Units: ug/L															
			Environmental Samples												
		Field ID:		SW4-01											
		Batch ID:		H718											
Parameters	MDL		PQL	Result	Validity	Comments									
trans-1,3-Dichloropropene	0.48		2	ND	U	g									
2-Chloroethyl Vinyl Ether	0.82		3	ND	U	g									
Bromoform	0.48		2	ND	U	g									
Methyl Isobutyl Ketone	1.22		4	ND	U	g									
2-Hexanone	0.72		2	ND	U	g									
Tetrachloroethylene (pce)	0.30		1	ND	U	g									
1,1,2,2-Tetrachloroethane	0.56		2	ND	U	g									
Toluene	0.46		2	ND	U	g									
Chlorobenzene	0.20		1	ND	U	g									
Ethylbenzene	0.28		1	ND	U	g									
Styrene	0.08		1	ND	U	g									
1,1,2-Trichloro-1,2,2-trifluoroethane	0.37		1	ND	U	g									
Xylenes, total	0.68		2	ND	U	g									
1,1,1,2-Tetrachloroethane	0.46		2	ND	U	g									
1,2,3-Trichloropropane	0.41		1	ND	U	g									
Bromochloromethane	0.24		1	ND	U	g									
1-Chlorohexane	1.68		5	ND	U	g									
Bromobenzene	0.43		2	ND	U	g									

Base: Kotzebue LRRS						Table 2.2.5										
Site: Background Samples						Analytical Data Summary										
Extraction Method: EPA Method 8260						EPA Method 8260										
Analytical Method: EPA Method 8260																
Matrix: Water																
Units: ug/L																
			Environmental Samples													
		Field ID:		MW1-01												
		Batch ID:		H772												
Parameters	MDL		PQL	Result	Validity	Comments										
Chloromethane	1.03		3	ND	U	g										
Bromomethane	0.42		2	ND	U	g										
Vinyl Chloride	0.52		2	ND	U	g										
Chloroethane	0.59		2	ND	U	g										
Methylene Chloride	0.41		1	ND	U	g										
Acetone	2.90		9	ND	U	g										
Carbon Disulfide	0.40		2	ND	U	g										
1,1-Dichloroethene	0.71		2	ND	U	g										
1,1-Dichloroethane	0.50		2	ND	U	g										
trans-1,2-Dichloroethene	0.42		1	ND	U	g										
cis-1,2-Dichloroethylene	0.43		2	ND	U	g										
Chloroform	0.26		1	ND	U	g										
1,2-Dichloroethane	0.69		2	ND	U	g										
Methyl Ethyl Ketone (2-butanone)	0.52		2	ND	U	g										
1,1,1-Trichloroethane	0.54		2	ND	U	g										
Carbon Tetrachloride	0.44		2	ND	U	g										
Vinyl Acetate	0.52		2	ND	U	g										
Bromodichloromethane	0.42		2	ND	U	g										
1,2-Dichloropropane	0.48		2	ND	U	g										
cis-1,3-Dichloropropene	0.38		1	ND	U	g										
Trichloroethylene (tce)	0.18		1	ND	U	g										
Dibromochloromethane	0.24		1	ND	U	g										
1,1,2-Trichloroethane	0.42		1	ND	U	g										
Benzene	0.42		2	ND	U	g										

Base: Kotzebue LRRS						Table 2.2.6										
Site: Background Samples						Analytical Data Summary										
Extraction Method: EPA Method 8260						EPA Method 8260										
Analytical Method: EPA Method 8260																
Matrix: Water																
Units: ug/L																
			Environmental Samples													
		Field ID:		MW1-01												
		Batch ID:		H772												
Parameters	MDL		PQL	Result	Validity	Comments										
trans-1,3-Dichloropropene	0.48		2	ND	U	g										
2-Chloroethyl Vinyl Ether	0.82		3	ND	U	g										
Bromoform	0.48		2	ND	U	g										
Methyl Isobutyl Ketone	1.22		4	ND	U	g										
2-Hexanone	0.72		2	ND	U	g										
Tetrachloroethylene (pce)	0.30		1	ND	U	g										
1,1,2,2-Tetrachloroethane	0.56		2	ND	U	g										
Toluene	0.46		2	ND	U	g										
Chlorobenzene	0.20		1	ND	U	g										
Ethylbenzene	0.28		1	ND	U	g										
Styrene	0.08		1	ND	U	g										
1,1,2-Trichloro-1,2,2-trifluoroethane	0.37		1	ND	U	g										
Xylenes, total	0.68		2	ND	U	g										
1,1,1,2-Tetrachloroethane	0.46		2	ND	U	g										
1,2,3-Trichloropropane	0.41		1	ND	U	g										
Bromochloromethane	0.24		1	ND	U	g										
1-Chlorohexane	1.68		5	ND	U	g										
Bromobenzene	0.43		2	ND	U	g										

Base: Kotzebue LRRS						Table 2.2.6								
Site: Background Samples						Analytical Data Summary								
Extraction Method: EPA Method 3520						EPA Method 8270								
Analytical Method: EPA Method 8270														
Matrix: Water														
Units: ug/L														
			Environmental Samples											
		Field ID:		SW1-01				SW2-01				SW3-01		
		Batch ID:		H700				H700				H700		
Parameters	MDL		PQL	Result	Validity	Comments	PQL	Result	Validity	Comments	PQL	Result	Validity	Comments
Phenol	0.9		3	ND	U	g	3	ND	U	g	3	ND	U	g
bis(2-Chloroethyl) Ether	1.9		6	ND	U	g	7	ND	U	g	6	ND	U	g
2-Chlorophenol	0.2		1	ND	U	g	1	ND	U	g	1	ND	U	g
1,3-Dichlorobenzene	0.3		1	ND	U	g	1	ND	U	g	1	ND	U	g
1,4-Dichlorobenzene	0.3		1	ND	U	g	1	ND	U	g	1	ND	U	g
Benzyl Alcohol	0.7		2	ND	U	g	3	ND	U	g	2	ND	U	g
1,2-Dichlorobenzene	0.2		1	ND	U	g	1	ND	U	g	1	ND	U	g
2-Methylphenol	0.2		1	ND	U	g	1	ND	U	g	1	ND	U	g
2,2'-Oxybis (1-Chloropropane)	0.2		1	ND	U	g	1	ND	U	g	1	ND	U	g
4-Methylphenol	0.6		2	ND	U	g	2	ND	U	g	2	ND	U	g
N-Nitrosodi-n-propylamine	1.3		4	ND	U	g	4	ND	U	g	4	ND	U	g
Hexachloroethane	0.6		2	ND	U	g	2	ND	U	g	2	ND	U	g
Nitrobenzene	0.3		1	ND	U	g	1	ND	U	g	1	ND	U	g
Isophorone	0.5		2	ND	U	g	2	ND	U	g	2	ND	U	g
2-Nitrophenol	0.5		2	ND	U	g	2	ND	U	g	2	ND	U	g
2,4-Dimethylphenol	2.6		8	ND	U	g	9	ND	U	g	8	ND	U	g
Benzoic Acid	3.1		10	ND	U	g	10	ND	U	g	10	ND	U	g
bis(2-Chloroethoxy) Methane	0.5		2	ND	U	g	2	ND	U	g	2	ND	U	g
2,4-Dichlorophenol	1.0		3	ND	U	g	4	ND	U	g	3	ND	U	g
1,2,4-Trichlorobenzene	0.2		1	ND	U	g	1	ND	U	g	1	ND	U	g
Naphthalene	0.2		1	ND	U	g	1	ND	U	g	1	ND	U	g
4-Chloroaniline	2.0		6	ND	U	g	7	ND	U	g	6	ND	U	g
Hexachlorobutadiene	0.7		2	ND	U	g	3	ND	U	g	2	ND	U	g
4-Chloro-3-Methylphenol	1.1		3	ND	U	g	4	ND	U	g	3	ND	U	g
2-Methylnaphthalene	0.6		2	ND	U	g	2	ND	U	g	2	ND	U	g
Hexachlorocyclopentadiene	2.9		9	ND	U	g	10	ND	U	g	9	ND	U	g
2,4,6-Trichlorophenol	1.5		5	ND	U	g	5	ND	U	g	5	ND	U	g
2,4,5-Trichlorophenol	1.3		4	ND	U	g	4	ND	U	g	4	ND	U	g
2-Chloronaphthalene	0.5		2	ND	U	g	2	ND	U	g	2	ND	U	g
2-Nitroaniline	1.3		4	ND	U	g	5	ND	U	g	4	ND	U	g
Dimethyl Phthalate	0.7		2	ND	U	g	3	ND	U	g	2	ND	U	g
Acenaphthylene	0.6		2	ND	U	g	2	ND	U	g	2	ND	U	g
3-Nitroaniline	5.4		20	ND	U	g	20	ND	U	g	20	ND	U	g
Acenaphthene	0.6		2	ND	U	g	2	ND	U	g	2	ND	U	g
2,4-Dinitrophenol	8.4		30	ND	U	g	30	ND	U	g	30	ND	U	g
4-Nitrophenol	1.6		5	ND	U	g	6	ND	U	g	5	ND	U	g
Dibenzofuran	0.6		2	ND	U	g	2	ND	U	g	2	ND	U	g
2,6-Dinitrotoluene	1.5		5	ND	U	g	5	ND	U	g	5	ND	U	g

Base: Kotzebue LRRS						Table 2.2.6								
Site: Background Samples						Analytical Data Summary								
Extraction Method: EPA Method 3520						EPA Method 8270								
Analytical Method: EPA Method 8270														
Matrix: Water														
Units: ug/L														
			Environmental Samples											
		Field ID:		SW1-01				SW2-01				SW3-01		
		Batch ID:		H700				H700				H700		
Parameters	MDL		PQL	Result	Validity	Comments	PQL	Result	Validity	Comments	PQL	Result	Validity	Comments
2,4-Dinitrotoluene	1.3		4	ND	U	g	5	ND	U	g	4	ND	U	g
Diethyl Phthalate	1.0		3	ND	U	g	3	ND	U	g	3	ND	U	g
4-Chlorophenyl Phenyl Ether	0.5		2	ND	U	g	2	ND	U	g	2	ND	U	g
Fluorene	0.5		2	ND	U	g	2	ND	U	g	2	ND	U	g
4-Nitroaniline	4.5		10	ND	U	g	20	ND	U	g	10	ND	U	g
4,6-Dinitro-2-Methylphenol	2.7		9	ND	U	g	10	ND	U	g	9	ND	U	g
N-Nitrosodiphenylamine	0.6		2	ND	U	g	2	ND	U	g	2	ND	U	g
4-Bromophenyl Phenyl Ether	0.6		2	ND	U	g	2	ND	U	g	2	ND	U	g
Hexachlorobenzene	0.6		2	ND	U	g	2	ND	U	g	2	ND	U	g
Pentachlorophenol	3.7		10	ND	U	g	10	ND	U	g	10	ND	U	g
Phenanthrene	0.6		2	ND	U	g	2	ND	U	g	2	ND	U	g
Anthracene	0.7		2	ND	U	g	3	ND	U	g	2	ND	U	g
di-n-butyl Phthalate	1.0		3	ND	U	g	3	ND	U	g	3	ND	U	g
Fluroanthene	0.6		2	ND	U	g	2	ND	U	g	2	ND	U	g
Pyrene	0.6		2	ND	U	g	2	ND	U	g	2	ND	U	g
Butylbenzylphthalate	0.7		2	ND	U	g	2	ND	U	g	2	ND	U	g
3,3'-Dichlorobenzidine	2.1		7	ND	U	g	7	ND	U	g	7	ND	U	g
Benzo(a)anthracene	0.6		2	ND	U	g	2	ND	U	g	2	ND	U	g
bis(2-Ethylhexyl) Phthalate	0.6		2	ND	U	g	2	ND	U	g	2	ND	U	g
Chrysene	0.6		2	ND	U	g	2	ND	U	g	2	ND	U	g
di-n-Octylphthalate	0.6		2	ND	U	g	2	ND	U	g	2	ND	U	g
Benzo(b)fluoranthene	0.6		2	ND	U	g	2	ND	U	g	2	ND	U	g
Benzo(k)fluoranthene	0.8		3	ND	U	g	3	ND	U	g	3	ND	U	g
Benzo(a)pyrene	0.7		2	ND	U	g	3	ND	U	g	2	ND	U	g
Indeno(1,2,3-c,d)pyrene	0.5		2	ND	U	g	2	ND	U	g	2	ND	U	g
Dibenzo(a,h)anthracene	0.6		2	ND	U	g	2	ND	U	g	2	ND	U	g
Benzo(g,h,i)perylene	0.5		2	ND	U	g	2	ND	U	g	2	ND	U	g

Base: Kotzebue LRRS						Table 2.2.6								
Site: Background Samples						Analytical Data Summary								
Extraction Method: EPA Method 3520						EPA Method 8270								
Analytical Method: EPA Method 8270														
Matrix: Water														
Units: ug/L														
			Environmental Samples											
		Field ID:		SW4-01										
		Batch ID:		H718										
Parameters	MDL		PQL	Result	Validity	Comments								
Phenol	0.9		3	ND	UJ	d								
bis(2-Chloroethyl) Ether	1.9		6	ND	UJ	d								
2-Chlorophenol	0.2		1	ND	UJ	d								
1,3-Dichlorobenzene	0.3		1	ND	UJ	d,k								
1,4-Dichlorobenzene	0.3		1	ND	UJ	d								
Benzyl Alcohol	0.7		2	ND	UJ	d								
1,2-Dichlorobenzene	0.2		1	ND	UJ	d								
2-Methylphenol	0.2		1	ND	UJ	d								
2,2'-Oxybis (1-Chloropropane)	0.2		1	ND	UJ	d								
4-Methylphenol	0.6		2	ND	UJ	d								
N-Nitrosodi-n-propylamine	1.3		4	ND	UJ	d								
Hexachloroethane	0.6		2	ND	UJ	d								
Nitrobenzene	0.3		1	ND	UJ	d								
Isophorone	0.5		2	ND	UJ	d								
2-Nitrophenol	0.5		2	ND	UJ	d								
2,4-Dimethylphenol	2.6		8	ND	UJ	d								
Benzoic Acid	3.1		10	ND	UJ	d								
bis(2-Chloroethoxy) Methane	0.5		2	ND	UJ	d								
2,4-Dichlorophenol	1.0		3	ND	UJ	d								
1,2,4-Trichlorobenzene	0.2		1	ND	UJ	d								
Naphthalene	0.2		1	ND	UJ	d								
4-Chloroaniline	2.0		6	ND	UJ	d								
Hexachlorobutadiene	0.7		2	ND	UJ	d								
4-Chloro-3-Methylphenol	1.1		3	ND	UJ	d								
2-Methylnaphthalene	0.6		2	ND	UJ	d								
Hexachlorocyclopentadiene	2.9		9	ND	UJ	d								
2,4,6-Trichlorophenol	1.5		5	ND	UJ	d								
2,4,5-Trichlorophenol	1.3		4	ND	UJ	d								
2-Chloronaphthalene	0.5		2	ND	UJ	d								
2-Nitroaniline	1.3		4	ND	UJ	d								
Dimethyl Phthalate	0.7		2	ND	UJ	d								
Acenaphthylene	0.6		2	ND	UJ	d								
3-Nitroaniline	5.4		20	ND	UJ	d								
Acenaphthene	0.6		2	ND	UJ	d								
2,4-Dinitrophenol	8.4		30	ND	UJ	d								
4-Nitrophenol	1.6		5	ND	UJ	d								
Dibenzofuran	0.6		2	ND	UJ	d								
2,6-Dinitrotoluene	1.5		5	ND	UJ	d								

Base: Kotzebue LRRS						Table 2.2.6							
Site: Background Samples						Analytical Data Summary							
Extraction Method: EPA Method 3520						EPA Method 8270							
Analytical Method: EPA Method 8270													
Matrix: Water													
Units: ug/L													
			Environmental Samples										
		Field ID:		SW4-01									
		Batch ID:		H718									
Parameters	MDL		PQL	Result	Validity	Comments							
2,4-Dinitrotoluene	1.3		4	ND	UJ	d							
Diethyl Phthalate	1.0		3	ND	UJ	d							
4-Chlorophenyl Phenyl Ether	0.5		2	ND	UJ	d							
Fluorene	0.5		2	ND	UJ	d							
4-Nitroaniline	4.5		10	ND	UJ	d							
4,6-Dinitro-2-Methylphenol	2.7		9	ND	UJ	d							
N-Nitrosodiphenylamine	0.6		2	ND	UJ	d							
4-Bromophenyl Phenyl Ether	0.6		2	ND	UJ	d							
Hexachlorobenzene	0.6		2	ND	UJ	d							
Pentachlorophenol	3.7		10	ND	UJ	d							
Phenanthrene	0.6		2	ND	UJ	d							
Anthracene	0.7		2	ND	UJ	d							
di-n-butyl Phthalate	1.0		3	ND	UJ	d							
Fluroanthene	0.6		2	ND	UJ	d							
Pyrene	0.6		2	ND	UJ	d							
Butylbenzylphthalate	0.7		2	ND	UJ	d							
3,3'-Dichlorobenzidine	2.1		7	ND	UJ	d							
Benzo(a)anthracene	0.6		2	ND	UJ	d							
bis(2-Ethylhexyl) Phthalate	0.6		2	ND	UJ	d							
Chrysene	0.6		2	ND	UJ	d							
di-n-Octylphthalate	0.6		2	ND	UJ	d							
Benzo(b)fluoranthene	0.6		2	ND	UJ	d							
Benzo(k)fluoranthene	0.8		3	ND	UJ	d							
Benzo(a)pyrene	0.7		2	ND	UJ	d							
Indeno(1,2,3-c,d)pyrene	0.5		2	ND	UJ	d							
Dibenzo(a,h)anthracene	0.6		2	ND	UJ	d							
Benzo(g,h,i)perylene	0.5		2	ND	UJ	d							

Base: Kotzebue LRRS						Table 2.2.6								
Site: Background Samples						Analytical Data Summary								
Extraction Method: EPA Method 3520						EPA Method 8270								
Analytical Method: EPA Method 8270														
Matrix: Water														
Units: ug/L														
			Environmental Samples											
		Field ID:		MW1-01										
		Batch ID:		H772										
Parameters	MDL		PQL	Result	Validity	Comments								
Phenol	0.9		3	ND	U	g								
bis(2-Chloroethyl) Ether	1.9		6	ND	U	g								
2-Chlorophenol	0.2		1	ND	U	g								
1,3-Dichlorobenzene	0.3		1	ND	U	g								
1,4-Dichlorobenzene	0.3		1	ND	U	g								
Benzyl Alcohol	0.7		2	ND	U	g								
1,2-Dichlorobenzene	0.2		1	ND	U	g								
2-Methylphenol	0.2		1	ND	U	g								
2,2'-Oxybis (1-Chloropropane)	0.2		1	ND	U	g								
4-Methylphenol	0.6		2	ND	U	g								
N-Nitrosodi-n-propylamine	1.3		4	ND	U	g								
Hexachloroethane	0.6		2	ND	U	g								
Nitrobenzene	0.3		1	ND	U	g								
Isophorone	0.5		2	ND	U	g								
2-Nitrophenol	0.5		2	ND	U	g								
2,4-Dimethylphenol	2.6		8	ND	U	g								
Benzoic Acid	3.1		10	ND	U	g								
bis(2-Chloroethoxy) Methane	0.5		2	ND	U	g								
2,4-Dichlorophenol	1.0		3	ND	U	g								
1,2,4-Trichlorobenzene	0.2		1	ND	U	g								
Naphthalene	0.2		1	ND	U	g								
4-Chloroaniline	2.0		6	ND	U	g								
Hexachlorobutadiene	0.7		2	ND	U	g								
4-Chloro-3-Methylphenol	1.1		3	ND	U	g								
2-Methylnaphthalene	0.6		2	ND	U	g								
Hexachlorocyclopentadiene	2.9		9	ND	U	g								
2,4,6-Trichlorophenol	1.5		5	ND	U	g								
2,4,5-Trichlorophenol	1.3		4	ND	U	g								
2-Chloronaphthalene	0.5		2	ND	U	g								
2-Nitroaniline	1.3		4	ND	U	g								
Dimethyl Phthalate	0.7		2	ND	U	g								
Acenaphthylene	0.6		2	ND	U	g								
3-Nitroaniline	5.4		20	ND	U	g								
Acenaphthene	0.6		2	ND	U	g								
2,4-Dinitrophenol	8.4		30	ND	U	g								
4-Nitrophenol	1.6		5	ND	U	g								
Dibenzofuran	0.6		2	ND	U	g								
2,6-Dinitrotoluene	1.5		5	ND	U	g								

Base: Kotzebue LRRS						Table 2.2.6							
Site: Background Samples						Analytical Data Summary							
Extraction Method: EPA Method 3520						EPA Method 8270							
Analytical Method: EPA Method 8270													
Matrix: Water													
Units: ug/L													
			Environmental Samples										
		Field ID:		MW1-01									
		Batch ID:		H772									
Parameters	MDL		PQL	Result	Validity	Comments							
2,4-Dinitrotoluene	1.3		4	ND	U	g							
Diethyl Phthalate	1.0		3	ND	U	g							
4-Chlorophenyl Phenyl Ether	0.5		2	ND	U	g							
Fluorene	0.5		2	ND	U	g							
4-Nitroaniline	4.5		10	ND	U	g							
4,6-Dinitro-2-Methylphenol	2.7		9	ND	U	g							
N-Nitrosodiphenylamine	0.6		2	ND	U	g							
4-Bromophenyl Phenyl Ether	0.6		2	ND	U	g							
Hexachlorobenzene	0.6		2	ND	U	g							
Pentachlorophenol	3.7		10	ND	U	g							
Phenanthrene	0.6		2	ND	U	g							
Anthracene	0.7		2	ND	U	g							
di-n-butyl Phthalate	1.0		3	ND	U	g							
Fluroanthene	0.6		2	ND	U	g							
Pyrene	0.6		2	ND	U	g							
Butylbenzylphthalate	0.7		2	ND	U	g							
3,3'-Dichlorobenzidine	2.1		7	ND	U	g							
Benzo(a)anthracene	0.6		2	ND	U	g							
bis(2-Ethylhexyl) Phthalate	0.6		2	ND	U	g							
Chrysene	0.6		2	ND	U	g							
di-n-Octylphthalate	0.6		2	ND	U	g							
Benzo(b)fluoranthene	0.6		2	ND	U	g							
Benzo(k)fluoranthene	0.8		3	ND	U	g							
Benzo(a)pyrene	0.7		2	ND	U	g							
Indeno(1,2,3-c,d)pyrene	0.5		2	ND	U	g							
Dibenzo(a,h)anthracene	0.6		2	ND	U	g							
Benzo(g,h,i)perylene	0.5		2	ND	U	g							

Base: Kotzebue LRRS						Table 2.2.7								
Site: Background Samples						Analytical Data Summary								
Extraction Method: EPA Method 9060						EPA Method 9060								
Analytical Method: EPA Method 9060														
Matrix: Water														
Units: mg/L														
			Environmental Samples											
		Field ID:		SW2-01										
		Batch ID:		H753										
Parameters	MDL		PQL	Result	Validity	Comments								
Total Organic Carbon	0.2		0.60	28	J	a,c								